Operation & Maintenance Manual (OMM)
Sewage Treatment Plant Upgrade

6526-460-132-REP-001

In Accordance with Water License 2AM-MEL1631

Prepared by:

Agnico Eagle Mines Limited – Meliadine Division

EXECUTIVE SUMMARY

The Nunavut Water Board (NWB) has issued Type A Water License 2AM-MEL1631 to Agnico Eagle Mines Limited (Agnico Eagle) for the Meliadine Gold Project site authorizing the use of water and the disposal of waste required by mining and milling and associated uses.

Agnico Eagle has prepared the following document which summarizes the operational and maintenance procedures to be followed at the sewage treatment plant (STP).

This report documents the stand alone Operation & Maintenance Manual – Sewage Treatment Plant, as specified under Water License 2AM-MEL1631 Part F, Item 9 and includes the following requirements:

- The manual was prepared in accordance with the "Guidelines for the Preparation of an Operation and Maintenance Manual for Sewage and Solid Waste Disposal Facilities in the Northwest Territories, 1996", and adapted for the use of a mechanical sewage treatment facility;
- The manual includes contingency measures in the event of a plant malfunction; and
- The manual includes sludge management procedures.

IMPLEMENTATION SCHEDULE

As required by Water License 2AM-MEL1631, Part D, Item 10, the proposed implementation schedule for this Plan is outlined below.

This Plan will be implemented upon Board approval and subject to any modifications proposed by the NWB as a result of the review and approval process.

DISTRIBUTION LIST

Agnico Eagle Internal:

- Energy & Infrastructure Superintendent
- Energy & Infrastructure General Supervisor
- Energy & Infrastructure Supervisor
- Environmental Superintendent
- Environmental General Supervisor
- Environmental Coordinator
- Hydrology Coordinator
- Environmental Compliance Counselor
- STP Operator

DOCUMENT CONTROL

Version	Date (YMD)	Section	Page	Revision
1	16/12/2016			Operation and Maintenance manual
2	20/02/2017	3.4.2	14	Criteria for Influent and Effluent (as per requirement in letter submitted on 20/02/2017 by NWB regarding the *Final Design and Construction Drawings for STP*
3	4/12/2019	2.15 & 3.2 3.1 3.4.2	10 & 13 13 15	General Review and update of the document for operations Update the document to reflect the dewatered sludge Update the section to reflect changes to the Waste Water Collection System. Update the STP weekly analytical data from laboratory results.
4	17/07/2020	Fig 2 2 3.1 App. A & B	8 10-14 15	Operation and Maintenance manual for STP upgrade New layout Addition of new infrastructure description Lifting station update Update of drawing for the current and new infrastructures
5	09/03/2021	Fig 2 App. A App. D	8	New layout Update drawing Update OMM

TABLE OF CONTENTS

1 INTRODUCTION 6
1.1 Purpose 6
1.2 Brief Description of the Project 6
1.3 Contact Information 6

2 DESCRIPTION 9
2.1 Description of Treatment Plant 9
2.1.1 Flow Equalization and Screening 10
2.1.2 Aerobic Biological Treatment 10
2.1.3 Membrane Filtration System 10
2.1.4 UV Disinfection System 11
2.1.5 Sludge Handling System 11
2.2 Sewage Generation and Composition 14
2.3 Chemicals Used in the Treatment Process 14

3 OPERATION AND MAINTENANCE 15
3.1 Wastewater Collection 15
3.2 Sludge Disposal 15
3.3 Collection Pond 1 16
3.4 Normal Operational and Maintenance Procedures 16
3.5 Monitoring 16
3.6 Record Keeping 18
3.7 Safety Procedures For Operators 18
3.8 Controlling Access to STP 18

4 EMERGENCY RESPONSE 19
4.1 Fire 19
4.2 Spill 19
4.3 Plant Malfunction 19

LIST OF APPENDICES

Appendix A: STP upgrade drawings
Appendix B: Current STP drawings
Appendix C: SDS
Appendix D: Membrane bioreactor OMM
Appendix E: Volute OMM
Appendix F: Data recording example

1 INTRODUCTION

1.1 PURPOSE

This Sewage Treatment Plant (STP) Operation and Maintenance (O&M) Manual for the Meliadine Gold Project (the Project) has been prepared in accordance with the Nunavut Water Board Type A Water License 2AM-MEL1631, Part F, item 9, and is based on the "*Guidelines for the Preparation of an Operation and Maintenance Manual for Sewage and Solid Waste Disposal Facilities in the Northwest Territories, 1996, prepared by the Department of Municipal and Community Affairs, NWT*". The manual has been adapted for the use of a mechanical sewage treatment facility.

This manual is a component of the Responsible Mining Management System (RMMS). The objectives of this plan are summarized as follows:

1. To define the location, design and operating procedures to be used in the treatment of sewage generated at the Meliadine Mine; and
2. To provide monitoring requirements for the STP.

1.2 BRIEF DESCRIPTION OF THE PROJECT

Agnico Eagle Mines Limited (Agnico Eagle) operates the Meliadine gold mine located approximately 25 km north of Rankin Inlet, and 80 km southwest of Chesterfield Inlet in the Kivalliq Region of Nunavut. The project site is located on the peninsula between the East, South, and West basins of Meliadine Lake (63°01'23.8"N, 92°13'6.42"W). The area is accessible from the all-weather gravel road linking the Meliadine mine site with Rankin Inlet.

A general location plan for the project is shown in Figure 1. Figure 2 presents the Layout of the STP (See also appendix A).

The current mine plan focuses on the development of the Tiriganiaq gold deposit which will be mined using both conventional open-pit and underground mining operations. Current mining facilities to support the Mine include a plant site and accommodations, tailings storage facility, waste rock storage facilities, ore storage pads, process plant, power plant, maintenance facilities, water management treatment plants and supporting infrastructures.

To support the camp accommodation, upgrading the current sewage treatment (STP) plant unit would be required.

1.3 CONTACT INFORMATION

The individuals responsible for the operation of the sewage treatment plant for the Meliadine Gold Project are the following:

Energy & Infrastructure Superintendent	819-759-3555 ext. 4603161
Energy & Infrastructure General supervisor	819-759-3555 ext. 4603128
Energy & Infrastructure Supervisor	819-759-3555 ext. 4603908

Figure 1 - Location of Meliadine STP

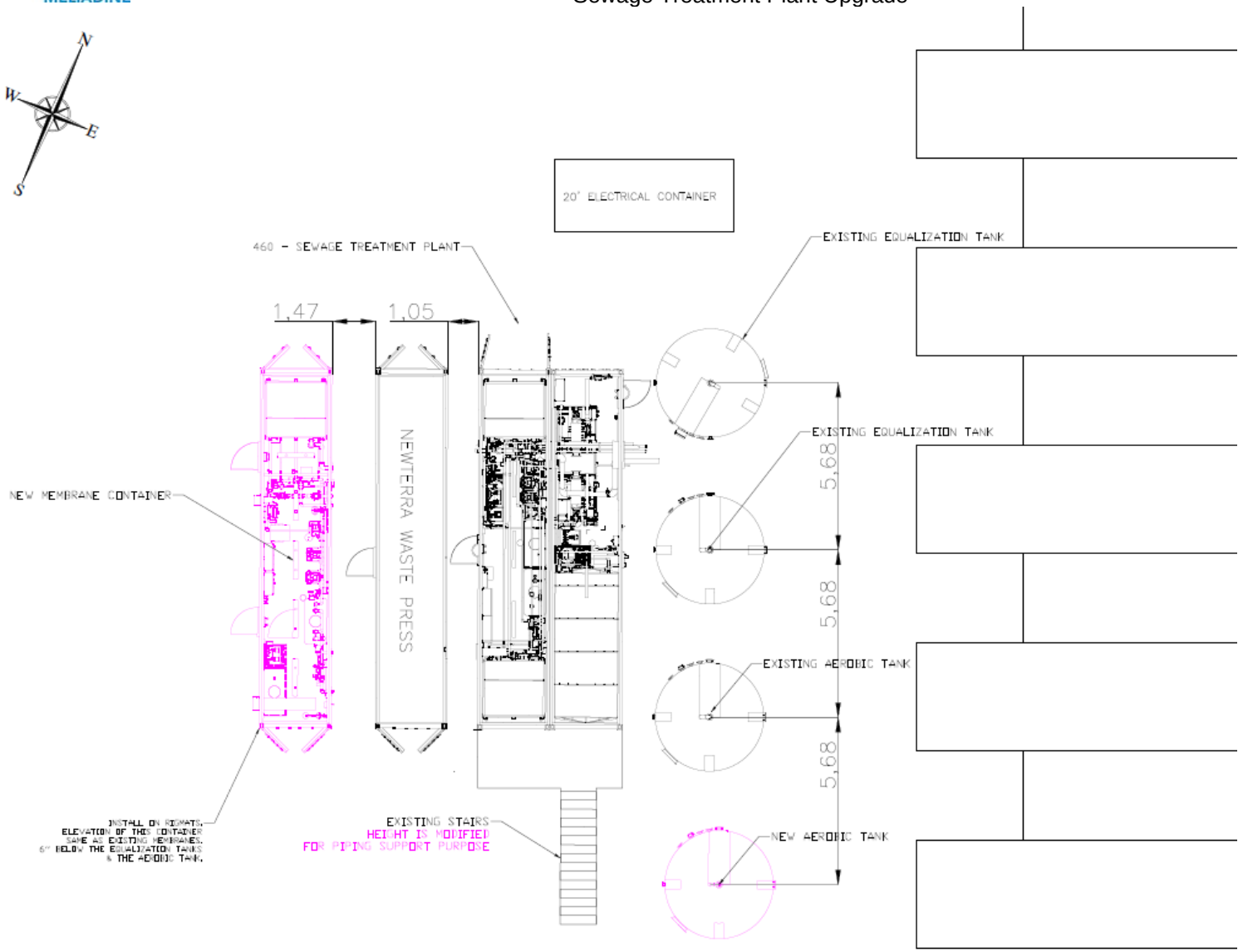

Figure 2 - STP Layout

2 DESCRIPTION

2.1 DESCRIPTION OF TREATMENT PLANT

Sewage will be collected from the facilities and pumped to the STP. The objective of the STP is to treat sewage to an acceptable level for discharge to CP1 via a sewage water discharge pipeline. The STP is housed in a prefabricated (modular) structure, located on the east side of the industrial pad (Figure 1 and 2).

The STP relies on bacterial activity. The process is composed of five (5) steps described below:

- flow equalization and screening,
- aerobic biological treatment,
- membrane filtration,
- ultraviolet disinfection,
- and sludge handling/dewatering.

PID are available in appendices A and B.

The treated sewage from the STP will be pumped through a heat traced insulated pipeline to CP1 pond which is designed to receive all the surface contact waters on site. This water is pumped to the final effluent treatment plant for TSS control prior to discharge into Meliadine Lake.

Table 1 presents the target effluent concentration at the exit of the STP. Note that these parameters are operational targets and no effluent are discharged to the environment.

Table 1: Expected operational parameters

Parameter	Unit	Effluent target
BOD_5	mg/L	<25
TSS	mg/L	<25
pH	units	6-9
Ammonia Nitrogen (N-NH3)	mg/L	0.89
Fats, Oils and Grease	mg/L	15

The water quality of the sewage and gray water entering the plant and the composition water exiting the units will be monitored on a regular basis to determine plant efficiency. Sewage sludge removed from the STP will be added to the landfarm as nutrient amendment on an as needed basis. Excess sludge will be disposed of in the Tailings Storage Facility (TSF) or in the waste rock storage facility (WRSF) or shipped south for disposal.

STP upgrade equipment were selected to manage an equivalent of 200 additional people in the camp (the current STP is designed for 520 persons). The current treatment plant is able to treat a maximum daily flow of 216 000 L per day (maximum design flow). The upgrade STP equipment will be able to handle an additional 83 076 L per day.

The equipment added in the STP upgrade is an aerobic tank with a fine bubble diffusor and an additional sea can with a membrane train and utilities (instrumentation, blower, pumps, UV). This allows the filtration area to increase from 900 m^2 (current system) to 1350 m^2 (upgraded system).

2.1.1 Flow Equalization and Screening

The influent wastewater is pumped to the two (2) aerated equalization tanks. The equalization system is able to manage a variation in flows. It provides raw wastewater storage to store feed during high flow periods and to ensure feed supplementation during low flow periods. It provides a stable and consistent raw feed for the downstream processes. Equalized water is pumped via two (2) equalization pumps into a standpipe inside the second tank and flows from that pipe by gravity to the fine screens. The fine screens are rotary drum screens with 2 mm perforated plate openings that operate continuously. The screens will ensure the removal of large debris to protect downstream equipment. Pressurized wash water is used intermittently to clean the screens and screenings.

2.1.2 Aerobic Biological Treatment

Screened raw water flows by gravity from the screens into the sump tank, where it is pumped to the aerobic tank, which is located outdoors. Aerobic biological treatment removes the organic load (measured as BOD) of the wastewater. Bacteria grown in the bioreactor remove unwanted organic pollutants to produce a treated water of high quality. Oxygen is supplied by regenerative blowers and is injected by fine bubble diffusers in the tank. The diffusers are designed for a wide range of air flows, according to the system's demand in oxygen. It keeps a dissolved oxygen concentration of at least 2 mg/L at any time to satisfy the needs of the biomass. The mixed liquor suspended solids (MLSS) overflows into a standpipe inside the tank and flows by gravity to the membrane filtration trains. The target MLSS in the aerobic reactor is 10 g/L.

The dry bacteria product, BEC105, could be used in the treatment process to stimulate biological activity when needed. To start up the new bioreactor, sludge from the current plant can be used too.

2.1.3 Membrane Filtration System

Membrane filtration is used to separate the bacteria from the water to ensure keeping them in the process at the desired concentration. Activated sludge is returned at a constant flow rate to the aerobic tank to prevent a build-up of sludge in the membrane tank. The return activated sludge (RAS) is pumped at a higher flow rate than the design flow rate of the plant, to make sure that there is good circulation in the whole system and that there is no accumulation of solids.

The membranes are totally submerged and have a pore size of 0.4 microns, which remove all suspended solids in the effluent.

The permeation pumps are provided to suction the effluent through the membrane modules and transport it to the permeate tank. The permeation pumps are supplied with variable speed drives to overcome any changes in transmembrane pressure and achieve the design at all times.

The operating cycle for the selected modules is to suction effluent water for seven (7) minutes and to relax the membrane for one (1) minute. The cycle optimizes the long-term operation of the membrane modules. The housings are constructed with an integrated diffuser at the bottom to aerate the membrane continuously and prevent clogging and accumulation of sludge. The relaxation of the membranes allows extending the interval between cleanings (CIP or Clean-In- Place). CIP cleans are done about twice a year. Washes are performed with permeate stored in the permeate storage tank while a cleaning chemical (either sodium hypochlorite or citric acid) is added. Chemical solutions are reverse flowing through the membranes, which are soaked for a few hours after. After washing, the permeation is restarted. While a train is washing, the other train can continue to treat water and ensure a continuous production of effluent.

Once a week, a chemically enhanced back pulse (CEB) should be performed on the membrane modules with sodium hypochlorite to mitigate membrane fouling. Permeate flow is reversed to flow back into the membranes while the cleaning chemical is added inline.

2.1.4 UV Disinfection System

From the permeate pumps, each membrane bioreactor train sends permeate through an inline ultraviolet disinfection system. It is a physical process that inactivates instantaneously microorganisms. The UV system process adds no chemicals to the water, and therefore, has no impact on the chemical composition of the effluent. From here, effluent is sent to a common permeate storage tank. The permeate tank acts as a reservoir for treated water that is pumped to a discharge location. This tank can also be used for CEB and CIP process, as previously mentioned.

2.1.5 Sludge Handling System

Since bacteria continue to reproduce as they consume organics and nutrients, the concentration of biomass, measured as Mixed Liquor Suspended Solids (MLSS), increases with time. Periodic sludge wasting is required to control the MLSS concentration in the bioreactor tanks. Sludge is sent to the sludge storage tank by redirecting the flow of the RAS pump (approximately 1% solid content). A blower and coarse bubble diffuser system maintains an aerobic environment within the sludge tank to minimize the proliferation of odors. Periodic settling is used to facilitate the thickening of the waste activated sludge. The supernatant (upper portion of the tank) is sent back to the sump tank by opening a valve, where it will re-enter the treatment process. This operation (called decanting) reduces the volume of sludge that needs to be handled and extends the period of time that the sludge tank can be used before thickened sludge is disposed (approximately 2-3 % solid content).

A Sludge Dewatering System (Volute) system is also available to remove the solid fraction out of the sludge storage tank. Basically, the flocculated sludge pass through a screw press that utilizes a screw inside a moving casing. Water collected during the dewatering is sent back to the STP equalization tank. The cake is then collected in a solid-waste bin for disposal in the Waste Rock Storage Facility. Other storage options are available for sludge management if required, and include: the Tailings Storage Facility, shipment south during the barge season for disposal or a small portion may be added to the landfarm. The system is designed to treat 3 to 5 m^3 per 12 h and will produce approximately 0.28 m^3 per day (based on 12 h operation) of sludge cake at approximately 18 % solid. The cationic polymer consumption is estimated at 0.5 kg per day.

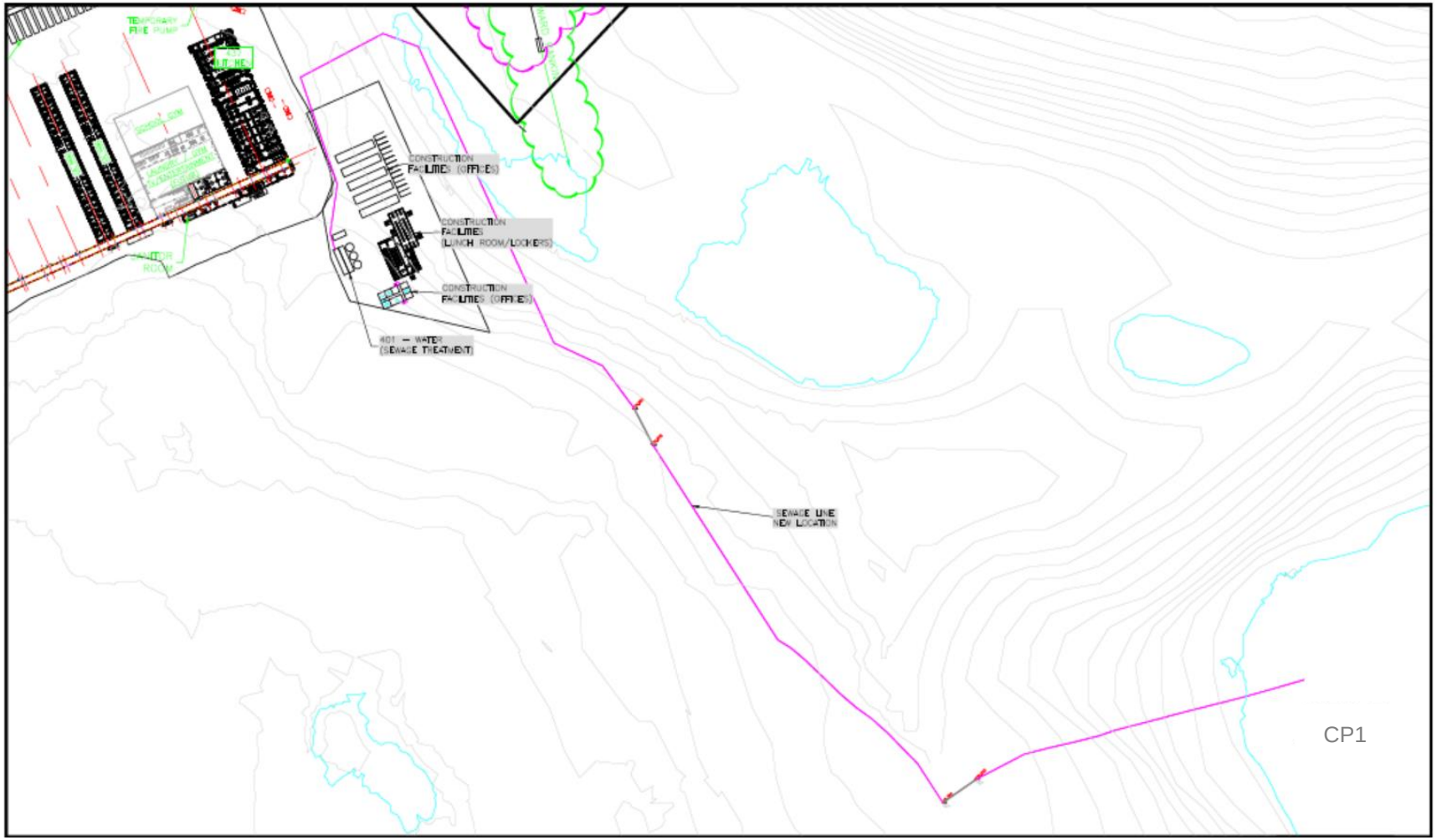

Figure 3 - STP effluent line to CP1

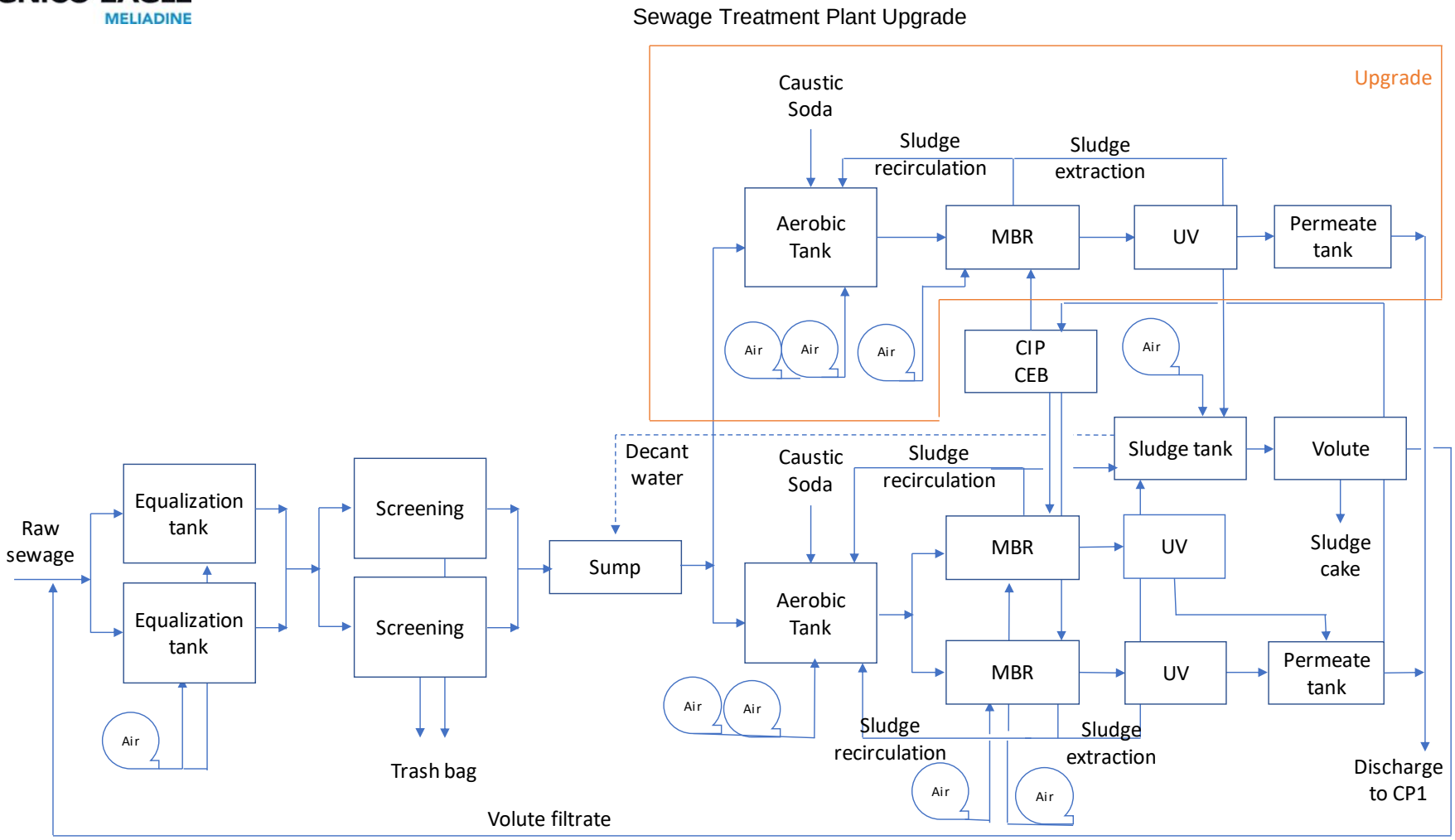

Figure 4 – Conceptual Process flow diagram

2.2 SEWAGE GENERATION AND COMPOSITION

The composition of the sewage and gray water entering the plant and the water quality exiting the units is monitored on a weekly basis (to determine plant efficiency).

Table 2 presents the raw sewage water characteristic used for the design.

Table 2: Raw Water

Parameter	Unit	Raw water
BDO5	mg/L	200-360
TSS	mg/L	50-350
pH	unit	6.5-8.5
Ammonia Nitrogen (N-NH3)	mg/L	40-50
Fats, Oils and Grease	mg/L	20-50
TKN	mg/L	45-60
Ptotal	mg/L	5-12
Alkalinity	mg/L	250-500

2.3 CHEMICALS USED IN THE TREATMENT PROCESS

Table 3 presents the main chemical used in the plant. Safety data sheet are presented in Appendix C.

Table 3: Chemical usage

Chemical	Usage
Sodium Hypochlorite 12%	Chemically Enhanced Backpulse (one a week) and clean-In-Place (twice a year)
Citric Acid	Clean-In-Place (twice a year)
Caustic soda	Adjust pH in the reactor due to the nitification
Hydrex 3613 - flocculant	Polymer for sludge dewatering in the volute
CC 4509 - flocculant	

3 OPERATION AND MAINTENANCE

3.1 WASTEWATER COLLECTION

Wastewater from the accommodation complex and from satellite sewage tanks will be treated in the Sewage Treatment Plant (STP) before being directed to Collection Pond 1 (CP1).

All sewage and gray water generated at Meliadine is drained by gravity pipelines to localized lift stations, then pumped to one of the two centralized collecting lift station. From those centralized lifts stations the effluent is pumped through a heat traced insulated pipeline to the STP equalization tanks. The number of lifting stations, and the building they service, is provided below.

- Lifting station 1 (local) serves dormitory wing 1 and connects to lift station 13.
- Lifting station 2 (local) serves dormitory wing 2 and connects to lift station 13.
- Lifting station 3 (local) serves dormitory wing 3 and connects to lift station 13.
- Lifting station 4 (local) serves dormitory wing 4 and connects to lift station 13.
- Lifting station 5 (local) serves dormitory wing 5 and connects to lift station 13.
- station 6 (local) serves dormitory wing 6 and connects to lift station 13.
- Lifting station 7 (local) serves dormitory wing 7 and connects to lift station 13.
- Lifting station 8 (local) serves dormitory wing 8 and connects to lift station 13.
- Lifting station 9 (local) serves dormitory wing 9 and connects to lift station 13.
- Lifting station 10 (local) serves dormitory wing 10 and connects to lift station 12.
- Lifting station 11 (local) serves dormitory wing 11 and connects to lift station 12.
- Lifting station serves dormitory wing 12 and connects to lift station 13.
- Lifting station serves dormitory wing 13 and connects to lift station 13.
- Lifting station serves dormitory wing 14 and connects to lift station 13.
- Lift station 12 connects to lift station 13.
- The grease trap lift station connects to lift station 13
- Lift station 13 (main camp) serves the main camp complex, recovers all sewage from, kitchen, dormitories and recreation hall and pumps all the sewage to the STP equalization tanks. This is the primary line that feeds the STP
- Lifting station 14 (local) serves the Power plant and connect to lift station 18.
- Lifting station 15 (local) serves the Process plant and connect to lift station 18.
- Lift station 16 (local) serves the Assay laboratory and the Emergency responder building and connect to lift station 18.
- Lift station 17 (local) serves the Maintenance shop (garage) and connects to lift station 18.
- Lifting station 18 (central) service the Power Plant, the Process plant, the Assay lab, the ERT and the Multi-service truck shop building and pumped all the sewage collected to the STP equalization tanks. This is the secondary line that feeds the STP.

In addition to the sewage generated from the buildings above, a sewage vacuum truck collects sewage from 7 storage tanks at different temporary or remote buildings such as the emulsion plant, the paste plant, the crusher building, the portal #1 and construction offices. This material is directly deposited into lift station 18.

3.2 SLUDGE DISPOSAL

Sewage sludge removed from the STP may be added to the landfarm as nutrient amendment on an as needed basis. With the operation of the sludge dewatering unit (volute), the preferred disposal method

is in the Waste Rock Storage Facility (WRSF). As a contingency, the dewatered sludge may also be disposed of in the TSF or shipped south for disposal.

Operators will record the approximate amount of sludge generated on a daily basis as this information may be required as part of the annual report.

3.3 COLLECTION POND 1

The treated sewage from the STP is pumped through a heat traced insulated pipeline to CP1 pond which is designed to receive all the surface contact waters on site. This water is pumped to the final Effluent water Treatment Plant (EWTP) for TSS control prior to discharge into Meliadine Lake.

3.4 NORMAL OPERATIONAL AND MAINTENANCE PROCEDURES

The general operational and maintenance procedures at the plant are available in the manufacturer' operating manuals in Appendices D and E.

In order to keep a properly functioning STP, certain material must be kept out of the influent raw sewage. These items are:

- Food and other kitchen grease are removed from the sewage in the kitchen via a grease trap. The grease trap is manually cleaned to keep this material out of the sewage treatment plant influent and the recovered grease is disposed in drums and shipped south for final disposal or burned in the incinerator. Bacteria is added to the grease to reduce the amount of grease for disposal.

- Camp rules and purchasing practices prohibit antibacterial soap from being used on site to protect the biological activity in the STP process.

3.5 MONITORING

The STP at Meliadine has been in service since early in 2017. The following are the general Operation, Maintenance and Sampling procedures that are being employed. Further details of Operation, Maintenance procedures are provided in the equipment operating & maintenance manual (Appendices D and E).

Daily

A daily inspection of the sewage collection system, heat traced pipelines, and treatment plant will be conducted to ensure there are no spills or incidents to report.

Inspection and sampling sheets will be completed daily for the STP system, these forms include:

- Daily weather observations
- Temperature and pH of influent in the STP
- Influent flowrate
- Mixed Liquor Suspended Solids (MLSS) concentration range
- Discharge volumes
- Turbidity
- Dissolved Oxygen and pH measurements of the final discharge of the treatment unit
- Visual observations of the final discharge

Example record sheets are provided in Appendix F.

Weekly

Sampling will be conducted on a weekly basis for the water quality parameters listed in the table below which also includes the concentrations to expect at the influent and at the effluent of the sewage treatment plant (STP). The information below comes from the operation of the STP at the Meliadine Mine from January to early December 2019.

Table 3: Water Quality in 2019

Parameter	**2019 Influent Quality Average**	**2019 Effluent Quality Average**
BOD	359 mg/L	3.0 mg/L
COD	688 mg/L	28 mg/L
TSS	443 mg/L	2.3 mg/L
Ammonia Nitrogen (NH_3-N)	58 mg/L	1.1 mg/L
NO_3 (nitrate)	0.17 mg N/L*	63 mg N/L
NO_2 (nitrite)	0.10 mg N/L*	0.11 mg N/L
Tot. Kjeldahl Nitrogen	73 mg/L	2.7 mg N/L
T-Phosphorus	11 mg/L	7.3 mg/L
pH	7.4	7.6
Alkalinity as $CaCO_3$	298 mg/L	77 mg/L
Total Coliforms	N/A	673 cfu/100 mL
Fecal Coliforms	N/A	28 cfu/100mL

**The detection limit value was used in the calculation of the average for the values below the detection limit.*

Once a week, a chemically enhanced back pulse (CEB) should be performed on the membrane modules with sodium hypochlorite to mitigate membrane fouling.

Maintenance inspections and repairs, if necessary, will be performed weekly. It is primordial to check the entire system for signs of wear, deterioration and damage. These symptoms include excessive vibration, excessive or unusual noise, corrosion, pipes or loose connections and leaks.

Bi-annual

Twice a year, a Clean In Place (CIP) of the membrane will be performed by reversing the flow with chemical cleaning solution, after the reverse flow process, the membrane will soak in the cleaning solution for a few hours before being put back to service.

Twice a year, the bearing of the electrical motors of the pumps will be greased.

Twice a year, all instruments and sensors will be calibrated. It is also important to confirm the status of the level and pressure switches at least twice a year.

3.6 RECORD KEEPING

Records of the operational and maintenance and sampling procedures will be kept daily in order to assist in the evaluation of the effectiveness of the STP.

The following will be recorded on a daily basis:

- Volume of any effluent discharged to environment;
- Volume of dewatered sludge collected;
- Sewage volume collected; and
- Details of any maintenance undertaken at site.

As per water license 2AM-MEL1631 Part I Item 9h, the following will be recorded on a monthly basis:

- Volume of sewage sludge and or dewatered sludge removed from the STP; and
- Locations and methods of sewage sludge disposal.

The record sheets will be kept in the STP office and/or the server with a copy submitted to the environmental department on a periodic basis if requested.

3.7 SAFETY PROCEDURES FOR OPERATORS

Employees working in the STP facility must be trained prior to commencement of work so that they are aware of the health and safety risks as well as the operational procedures associated with the STP. The following are important safety rules:

- Working with sewage requires adequate protection for operators. This includes wearing steel toed boots, hard hat, rubber aprons, protective glasses with side shields, protective gloves, and ear plugs.
- All authorized personnel working in the STP must have received Hepatitis A and B vaccine.
- Operator's need to keep their working area clean to minimize the risk of accidents.
- Regular personal hygiene (like washing hands) is important to prevent illness.
- Following lock-out and tag-out procedures when servicing equipment.
- No person shall drink the water in the plant or the water that is discharged from the STP.
- SDS for all chemicals used in the STP plant will be readily available for the operator.

Safety showers and eyewash are located within proximity of chemical systems in the STP plant.

3.8 CONTROLLING ACCESS TO STP

Access to the STP at Meliadine will be restricted to authorized personnel only. Signs will be posted on the STP entrance doors notifying all people that the entrance to the STP is for authorized personnel only.

No fencing is used to control access to the STP. Due to the remote nature of Meliadine, there is no concern of non-mine personnel attempting to access the site.

4 EMERGENCY RESPONSE

4.1 FIRE

In case of fire at the STP, the on-site emergency response team will be notified as per Agnico Eagle's protocol. Instructions from the on-site emergency response team will be followed by all personnel at the STP. Further details of fire response are provided in the "Meliadine Emergency Response Plan".

4.2 SPILL

In the event of a large spill at the STP, the on-site emergency response team will be notified as per Agnico Eagles' protocol. Instructions from the on-site emergency response team will be followed by all personnel at the STP. Further details of spill response are provided in the "*Spill Contingency Plan"*.

4.3 PLANT MALFUNCTION

If there is a major problem or failure in the STP it would be most likely due to changes in the influent (raw sewage) (i.e. high strength sewage (BOD high)). In this case, there would be visible effluent problems (part of daily operational checks), low dissolved oxygen (part of daily operational checks) and increased odors that the operator would note. If this occurs, a sample will be taken to try to determine the source of the problem.

In the event of a failure of the STP, there are four (4) holding tanks at the Exploration camp STP that can be temporarily used. In addition, there are some spare tanks at the Exploration camp which may be utilized in an emergency.

The following are other contingency measures that can be applied by Agnico Eagle in the event of a malfunction at the Meliadine STP for more than 24 hours:

- Cut back on allowable camp water until the malfunction is corrected and use the equalization tank to retard the peak flow to the functional unit;
- Shut down the malfunctioning unit until the malfunction is repaired and use other unit in parallel until repairs are completed;
- Shut down all water use in the camp until the repairs are completed.

Appendix A : STP upgrade

NO. DESSIN DRAWING NO. 65-460-210-200_R1

FORMAT ARCHD

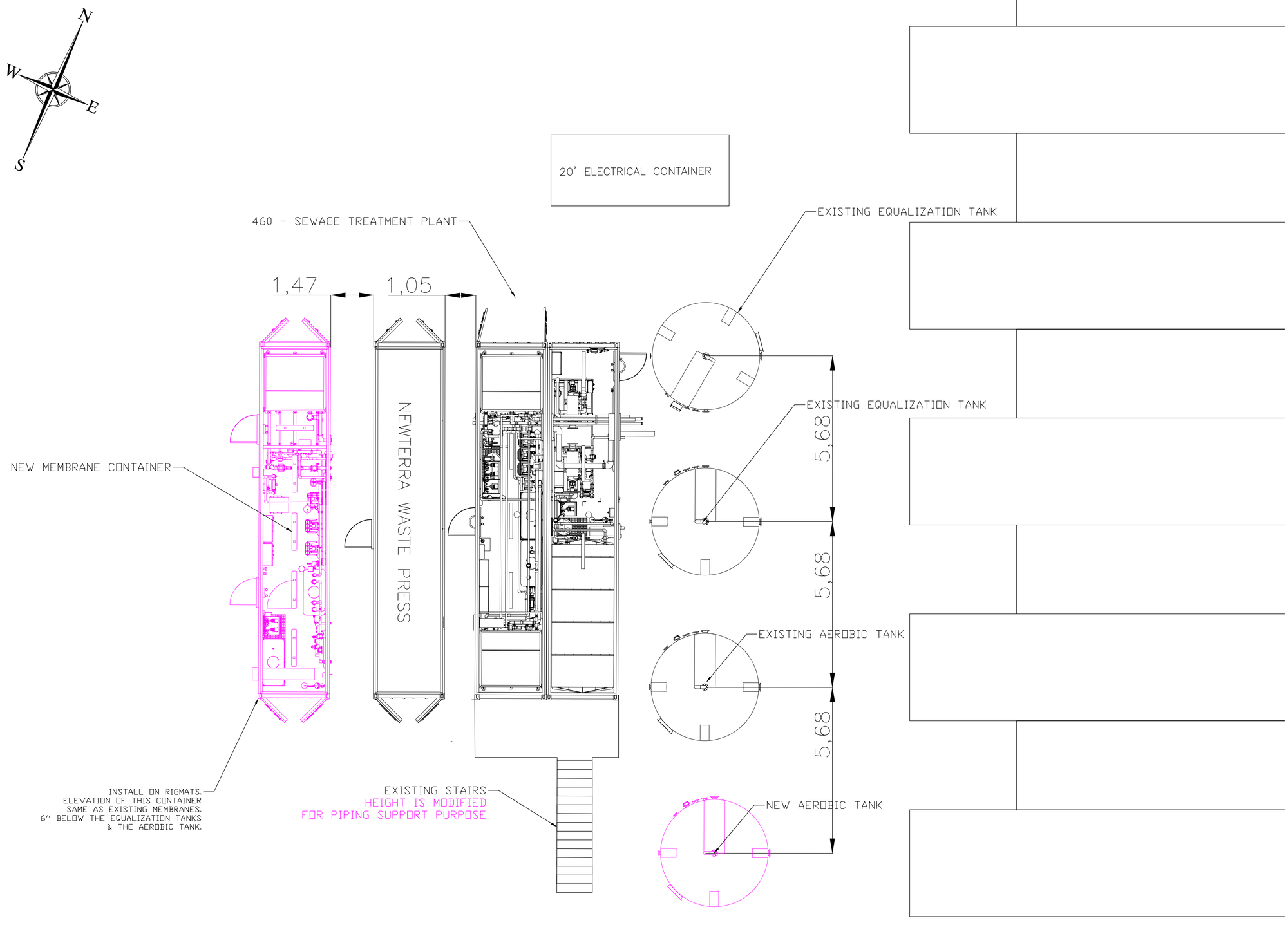

PLAN CLÉ
KEY PLAN

NOTES GÉNÉRALES / GENERAL NOTES

AS-BUILT
TEL QUE CONSTRUIT
AGNICO EAGLE
DATE: 12/10/2020

REGISTERED PROFESSIONAL ENGINEER
B. ROY
LICENSEE
NT/NU

Bruno Roy
Digitally signed by Bruno Roy
Date: 2020.11.09 10:49:57 -05'00'

L'INFORMATION CI-CONTENUE EST LA PROPRIÉTÉ DE AGNICO EAGLE LTÉE ET DOIT ÊTRE RETOURNÉE SUR DEMANDE. SANS AUTORISATION ÉCRITE PRÉALABLE, TOUTE TRANSMISSION DE COPIE(S) À AUTRUI ET TOUTE UTILISATION AUTRE QUE CELLE POUR LAQUELLE L'INFORMATION EST PRÊTÉE SONT INTERDITES. © AGNICO EAGLE LTÉE

THE INFORMATION HERE ON IS THE PROPERTY OF AGNICO EAGLE LTD. AND MUST BE RETURNED UPON REQUEST. WITHOUT WRITTEN PERMISSION, ANY COPYING TRANSMITTAL TO OTHERS AND ANY USE EXCEPT THAT FOR WHICH IT IS LOANED ARE PROHIBITED. © AGNICO EAGLE LTD.

DESSINS EN RÉFÉRENCE / REFERENCE DRAWINGS

TITRE / TITLE	# DWG
WASTE WATER CONTAINER	20C1131-B01-0001
WASTE WATER EXISTING CONTAINER	6515-C-250-010-154-MNL
	–
	–
	–
	–

AGNICO EAGLE

REV.	DATE	DESCRIPTION	PAR/BY	APP.	CLIENT
1	2020-10-12	AS-BUILT	D.L.	B.R.	
0	2020-05-22	ISSUED FOR CONSTRUCTION	P.R.	P.R.	

REVISIONS

TECHNOLOGICAL DOCUMENT

THE ORIGINAL OF THIS TECHNOLOGICAL DOCUMENT WAS ISSUED AND AUTHENTICATED:

PAUL RIVEST, P.Eng. ON 2020-05-22

THIS TECHNOLOGICAL DOCUMENT IS NOT SIGNED AND SEALED IN ACCORDANCE WITH THE ENGINEERS ACT AND CANNOT BE USED FOR ANY PURPOSES AWARD AT THE ENGINEERS ACT. ABOVE IS THE TECHNOLOGICAL DOCUMENT IS STRICTLY ISSUED FOR INFORMATION PURPOSES ONLY FOR COORDINATION AS THE CASE MAY BE AUTHENTICATED IN CHARGE ON THE ACCOUNTS OF THE INFORMATION ISSUED. NO GUARANTEE IS GIVEN ON MODIFICATIONS TO THIS TECHNOLOGICAL DOCUMENT WHICH WOULD HAVE BEEN DONE OR TO COME.

TITRE / TITLE
AGNICO EAGLE – MELIADINE DIVISION
460 – SEWAGE TREATMENT PLANT
210 – GENERAL ARRANGEMENT
EXPANSION
SITE VIEW

DESSINÉ PAR DRAWN BY	CARINE BEAULIEU	DATE 2020-05-20
VÉRIFIÉ PAR CHECKED BY	PAUL RIVEST, P.Eng.	2020-05-22
APPROUVÉ PAR APPROVED BY	PAUL RIVEST, P.Eng.	2020-05-22
ÉCHELLE SCALE	INDICATED	DATE 2020-05-20
NO. DESSIN DRAWING NO.	65-460-210-200	
NO. PROJET PROJECT NO.	6526	REVISION 1 / FEUILLE / SHT 1 / 1

AE-CART-ARCH D

C:\Users\david.longtin\OneDrive - agnicoeagle.com\Project-2020\Mel - Sewage Water Treatment Plant\65-460-210-200_R1.dwg-11/25/2020 11:32:07 AM

FILE NO. 65-460-210-200_R1.dwg

VALVE SYMBOLS

N.OPEN N.CLOSED

- BALL
- V-BALL
- BUTTERFLY
- DIAPHRAGM
- GATE
- GLOBE
- NEEDLE
- PLUG
- SAMPLE/DRAIN
- CHECK
- BACKFLOW PREVENTER
- 3-WAY, 4-WAY
- PRESSURE REGULATING
- BACK PRESSURE REGULATING
- FLOW CONTROL
- 2-WAY SOLENOID
- 3-WAY SOLENOID
- 4-WAY SOLENOID
- AIR RELEASE
- VACUUM BREAKER
- PRESSURE RELEASE
- SLUICE GATE/WEIR

VALVE ACTUATOR SYMBOLS

- PNEUMATIC (FAIL LAST POSITION)
- PNEUMATIC FAIL CLOSE
- PNEUMATIC FAIL OPEN
- ELECTRIC
- DIAPHRAGM
- POSITIONER (ANY ACTUATOR TYPE)
- HAND OVERRIDE (ANY ACTUATOR TYPE)
- TRAVEL STOPS (ANY ACTUATOR TYPE)

FLOWMETER SYMBOLS

INTEGRAL — CLOSE COUPLED — REMOTE

- MAGNETIC
- PADDLE
- VORTEX
- DP/ORIFICE
- THERMAL
- ROTAMETER

INSTRUMENTATION SYMBOLS

LOCALLY MOUNTED	IN CONTROL PANEL	DESCRIPTION
X nnnnn	X nnnnn	DISCRETE INSTRUMENT
	X nnnnn	PRIMARY PLC OR DCS SHARED CONTROL
	X nnnnn	SECONDARY PLC OR DCS SHARED CONTROL
	X nnnnn	COMPUTER FUNCTION

INSTRUMENT FUNCTIONS

- K — SIGNAL PROCESSING FUNCTION
- A/M — AUTO/MANUAL
- Σ — ADDITION/SUMMATION
- Δ — DIFFERENTIAL
- I — INTERLOCK LOGIC FUNCTION
- Σ/n — AVERAGING

INSTRUMENT CONNECTIONS

- THREADED
- SOCKETWELD
- WELDED

PIPING SYMBOLS

- FLANGED CONNECTION
- THREADED CONNECTION
- BLIND FLANGE
- DOUBLE CONTAINMENT
- QUICK DISCONNECT VICTAULIC
- x" INSULATION THICKNESS INSULATION
- QUICK DISCONNECT CAMLOK
- x" INSULATION THICKNESS E HEAT TRACING E=ELECTRIC S=STEAM G=GLYCOL
- CAPPED PIPE END
- DRAIN OUTLET
- UNION
- REDUCER ECCENTRIC REDUCER
- EXPANSION/FLEXIBLE/ ISOLATION JOINT

PIPING ABBREVIATIONS

316 SS	316 STAINLESS STEEL
304 SS	304 STAINLESS STEEL
316L SS	LOW CARBON 316 STAINLESS STEEL
304L SS	LOW CARBON 304 STAINLESS STEEL
CPVC	CHLORINATED POLYVINYL CHLORIDE
CS	CARBON STEEL
DI	DUCTILE IRON
HDPE	HIGH-DENSITY POLYETHYLENE
PE	POLYETHYLENE
PVC	POLYVINYL CHLORIDE
RLCS	RUBBER LINED CARBON STEEL
SCH.	SCHEDULE
SDR	STANDARD DIMENSION RATIO
CML	CEMENT MORTAR LINED

LINE SYMBOLOGY

- MAIN PROCESS LINE
- SECONDARY PROCESS LINE
- PROCESS LINE, BY OTHERS
- COMM LINK (EX. PLC TO HMI)
- COMM LINK (EX. PLC TO DCS)
- ELECTRIC WIRING
- PNEUMATIC LINE
- LINE JUMPER
- PIPE DISCONTINUATION
- FLOW DIRECTION ARROWS
- 4" 316 SS SCH.10 — LINES SIZE/ MATERIAL IDENTIFIER
- SKID BOUNDARY — SKID BY H_2O Innovation — BY OTHERS
- REVISION
- LINES TO/FROM OTHER SHEETS — DESCRIPTION — C01-0001 SHT 1 — DESTINATION

PUMP SYMBOLS

- CENTRIFUGAL
- CHEMICAL METERING
- DIAPHRAGM
- POSITIVE DISPLACEMENT
- VACUUM
- SUBMERSIBLE OR FLOATING
- VERTICAL TURBINE
- PERISTALTIC/HOSE

MISCELLANEOUS EQUIPMENT SYMBOLS

- CARTRIDGE FILTER HOUSING
- AUTOMATIC STRAINER
- SILENCER
- MIXER
- STATIC MIXER
- RESIN TRAP
- MOTOR
- EDUCTOR OR VENTURI
- Y STRAINER
- CONICAL OR TEMPORARY STRAINER
- PULSATION DAMPENER
- DIAPHRAGM
- FLOW ORIFICE
- AIR COMPRESSOR
- RUPTURE DISK (PRESSURE)
- RUPTURE DISK (VACUUM)
- SPECTACLE BLIND (NORMALLY OPEN, NORMALLY CLOSED)
- INJECTION QUILL
- FILTER
- REFRIGERATED AIR DRYER
- TANK
- MMF TANK
- IMMERSED HEATER
- IN-LINE HEATER
- ULTRASONIC LEVEL TRANSMITTER
- FLOAT-STYLE LEVEL TRANSMITTER
- CHEMICAL CONTAINMENT
- CALIBRATION COLUMN
- MEMBRANE
- UV STERILIZER
- DIFFUSERS:
- COARSE BUBBLE
- FINE BUBBLE
- POSITIVE DISPLACEMENT BLOWER
- REGENERATIVE BLOWER
- CENTRIFUGAL BLOWER
- TURBOCHARGER
- BIO-WHEEL
- MANWAY

FLOW INSTRUMENTS

FAH	FLOW ALARM HIGH
FAL	FLOW ALARM LOW
FCV	FLOW CONTROL VALVE
FE	FLOW ELEMENT
FI	FLOW INDICATOR
FIC	FLOW INDICATING CONTROLLER
FIT	FLOW INDICATING TRANSMITTER
FR	FLOW RECORDING
FSH	FLOW SWITCH HIGH
FSL	FLOW SWITCH LOW
FV	FLOW CONTROL OR ON/OFF VALVE
FQ	FLOW TOTALIZER
FX	ELEMENT CONTROLLED BY FLOW
FY	FLOW SIGNAL CONVERT, I/P, OR SOLN

PRESSURE INSTRUMENTS

PAH	PRESSURE ALARM HIGH
PAL	PRESSURE ALARM LOW
PC	PRESSURE CONTROLLER
PCV	SELF REG PRESS CONTROL VALVE
PDH	DIFFERENTIAL PRESSURE HIGH
PDI	DIFFERENTIAL PRESSURE INDICATOR
PDIT	DIFF PRESS INDICATING TRANSMITTER
PDSH	DIFFERENTIAL PRESS SWITCH HIGH
PG	PRESSURE GAUGE
PI	PRESSURE INDICATOR
PIC	PRESSURE INDICATING CONTROLLER
PIT	PRESSURE INDICATING TRANSMITTER
PSH	PRESSURE SWITCH HIGH
PSL	PRESSURE SWITCH LOW
PSV	SELF REG PRESS SAFETY VALVE
PT	PRESSURE TRANSMITTER
PX	ELEMENT CONTROLLED BY PRESSURE
PY	PRESS SIGNAL CONVERT, I/P, OR SOLN
PSLH	PRESSURE SWITCH LOW HIGH

LEVEL INSTRUMENTS

LAH	LEVEL ALARM HIGH
LAL	LEVEL ALARM LOW
LCV	SELF REG LEVEL CONTROL VALVE
LE	LEVEL ELEMENT
LG	LEVEL GAUGE
LI	LEVEL INDICATOR
LIC	LEVEL INDICATING CONTROLLER
LIT	LEVEL INDICATING TRANSMITTER
LSH	LEVEL SWITCH HIGH
LSL	LEVEL SWITCH LOW
LT	LEVEL TRANSMITTER
LV	LEVEL CONTROL OR ON/OFF VALVE
LX	ELEMENT CONTROLLED BY LEVEL
LY	LEVEL SIGNAL CONVERT, I/P, OR SOLN

TEMPERATURE INSTRUMENTS

TAH	TEMPERATURE ALARM HIGH
TAL	TEMPERATURE ALARM LOW
TC	TEMPERATURE CONTROLLER
TE	TEMPERATURE ELEMENT
TG	TEMPERATURE GAUGE
TI	TEMPERATURE INDICATOR
TIC	TEMP INDICATING CONTROLLER
TIT	TEMP INDICATING TRANSMITTER
TSH	TEMPERATURE SWITCH HIGH
TSL	TEMPERATURE SWITCH LOW
TT	TEMPERATURE TRANSMITTER
TV	TEMP CONTROL OR ON/OFF VALVE
TX	ELEMENT CONTROLLED BY TEMP
TY	TEMP SIGNAL CONVERT, I/P, OR SOLN

ELECTRICAL ABBREVIATIONS

JB	JUNCTION BOX
MCP	MAIN CONTROL PANEL
RIO	REMOTE I/O PANEL
PP	POWER PANEL
VFD	VARIABLE FREQUENCY DRIVE
HOA	HAND-OFF-AUTO

ANALYTICAL INSTRUMENTS

AAH	ANALYTICAL ALARM HIGH
AAL	ANALYTICAL ALARM LOW
AE	ANALYTICAL ELEMENT
AI	ANALYTICAL INDICATOR
AIC	ANAL INDICATING CONTROLLER
AIT	ANAL INDICATING TRANSMITTER
ASH	ANALYTICAL SWITCH HIGH
ASL	ANALYTICAL SWITCH LOW
AT	ANALYTICAL TRANSMITTER
AX	ELEMENT CONTROLLED BY ANALYTICAL
AY	ANALYTICAL SIGNAL CONVERT, I/P, OR SOL

MISCELLANEOUS INSTRUMENTS

HS	HAND SWITCH
HI	HAND SWITCH POSITION INDICATOR
II	CURRENT INDICATOR
QQI	TOTALIZER INDICATOR
SC	SPEED CONTROLLER
SI	SPEED INDICATOR
YA	MOTOR ALARM
YC	MOTOR CONTROL
YI	MOTOR ON/OFF INDICATOR
ZIC	SWITCH CLOSE INDICATOR
ZIO	SWITCH OPEN INDICATOR
ZSC	POSITION SWITCH CLOSED
ZSO	POSITION SWITCH OPEN
ZT	POSITION TRANSMITTER
ZI	POSITION INDICATOR

VALVES & EQUIPMENT

AC	AIR COMPRESSOR
ARV	AIR RELEASE VALVE
AS	AIR SUPPLY
B	BLOWER
BT	BULK TOTE
CBD	COARSE BUBBLE DIFFUSER
CV	CHECK VALVE
ED	EDUCTOR
F	FILTER
FBD	FINE BUBBLE DIFFUSER
FL	FAIL LAST (DEFAULT IF NOT SHOWN)
FC	FAIL CLOSED
FO	FAIL OPEN
FQG	CALIBRATION COLUMN
H	HEATER
HCV	HAND CONTROL VALVE
HTR	HEATER
HV	HAND VALVE
M	MOTOR
MX	MIXER
P	PUMP
RT	RESIN TRAP
ST	SPILL TANK
STR	STRAINER
T	TANK
UV	ULTRAVIOLET
HV	HAND VALVE
MV	MULTI FUNCTION VALVE

OTHER ABBREVIATIONS

CAP	CAPACITANCE
CIP	CLEAN-IN-PLACE
COND	CONDUCTIVITY
DO2	DISSOLVED OXYGEN
ESP	EMERGENCY STOP
IA	INSTRUMENT AIR
I/P	CURRENT TO PNEUMATIC CONVERTER
ORP	OXIDATION REDUCTION POTENTIAL
pH	HYDROGEN ION
RES	RESISTIVITY
RTD	RESISTANCE TEMP DETECTOR
SOL	SOLENOID
SP	SET POINT
uS	MICROSIEMENS
MIT	MEMBRANE INTEGRITY TEST

NOTE:
THE INFORMATION, SPECIFICATIONS AND DATA SHOWN ON THIS PRINT ARE FURNISHED BY AND ARE TO REMAIN THE PROPERTY OF H_2O INNOVATION.

THE PURPOSE OF THIS DOCUMENT IS TO FACILITATE THE INSTALLATION, MAINTENANCE AND OPERATION OF THE EQUIPMENT REPRESENTED BY SAID PRINT. NO OTHER USE OF THIS DOCUMENT SHALL BE MADE WITHOUT EXPRESS WRITTEN CONSENT FROM H_2O INNOVATION.

DRAWING REVISION

REV	DATE (DD/MM/YYYY)	REVISION DESCRIPTION	DRAWN	CHKD	ENG	APPVD
04	03/02/2021	AS INSTALLED	Y.D.	R.D.	R.D.	A.M.
03	13/11/2020	AS BUILT	Y.D.	R.D.	R.D.	A.M.
02	10/06/2020	FOR CONSTRUCTION	Y.D.	R.D.	R.D.	A.M.
01	13/05/2020	MODIFIED PER COMMENTS, MODIFIED INTERCONNECTION WITH MAIN PLANT	G.B.	R.D.	R.D.	A.M.
00	04/23/2020	INITIAL RELEASE	Y.D.	R.D.	H.C.	A.M.

h2o innovation — knowledge to share.du savoir à partager

UNLESS NOTED OTHERWISE
INTERPRETATION: ANSI Y14.5
TOLERANCES
FRACTIONS: ±1/64"
DECIMALS 0.X: ±0.030
0.XX: ±0.015
ANGLES: ±0.5°
HOLE SIZES: ±1/64"
HOLE CENTERS: ±1/32"
DO NOT SCALE PRINTS

MELIADINE STP EXPANSION

83 M3/DAY

TITLE: PIPING AND INSTRUMENTION DIAGRAMS LEGEND

SCALE: N/A

DRAWING NUMBER: 20C1131-C01-0001

SHEET: 1 of 1

REVISION 04

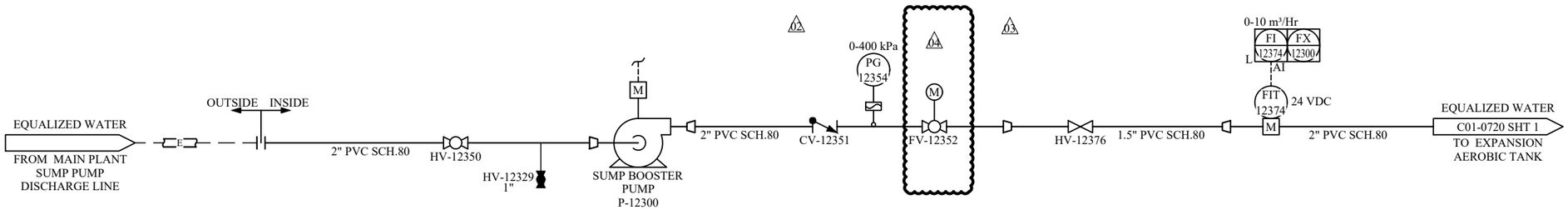

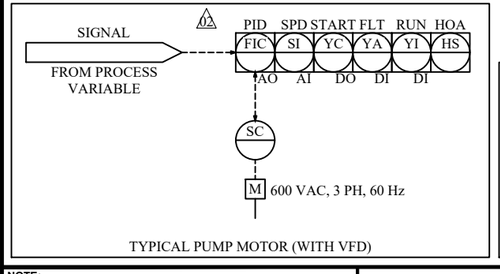

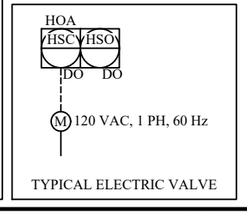

NOTE:
THE INFORMATION, SPECIFICATIONS AND DATA SHOWN ON THIS PRINT ARE FURNISHED BY AND ARE TO REMAIN THE PROPERTY OF H_2O INNOVATION.

THE PURPOSE OF THIS DOCUMENT IS TO FACILITATE THE INSTALLATION, MAINTENANCE AND OPERATION OF THE EQUIPMENT REPRESENTED BY SAID PRINT. NO OTHER USE OF THIS DOCUMENT SHALL BE MADE WITHOUT EXPRESS WRITTEN CONSENT FROM H_2O INNOVATION.

DRAWING REVISION

REV	DATE (DD/MM/YYYY)	REVISION DESCRIPTION	DRAWN	CHKD	ENG	APPVD
04	03/02/2021	AS INSTALLED	Y.D.	R.D.	R.D.	A.M.
03	13/11/2020	AS BUILT	Y.D.	R.D.	R.D.	A.M.
02	10/06/2020	FOR CONSTRUCTION	Y.D.	R.D.	R.D.	A.M.
01	13/05/2020	MODIFIED PER COMMENTS, MODIFIED INTERCONNECTION WITH MAIN PLANT	G.B.	R.D.	R.D.	A.M.
00	04/23/2020	INITIAL RELEASE	Y.D.	R.D.	H.C.	A.M.

h2O innovation
knowledge to share du savoir à partager

UNLESS NOTED OTHERWISE
INTERPRETATION: ANSI Y14.5
TOLERANCES
FRACTIONS: ±1/16"
DECIMALS 0.X: ±0.030
0.XX: ±0.015
0.XXX: ±0.5"
ANGLES: ±1°
HOLE SIZES: ±1/32"
HOLE CENTERS: ±1/8"
DO NOT SCALE PRINTS

MELIADINE STP EXPANSION

83 M3/DAY

TITLE:
SUMP BOOSTER PUMP
PIPING & INSTRUMENTATION DIAGRAM

SCALE: N/A

DRAWING NUMBER: 20C1131-C01-0110

SHEET: 1 of 1

REVISION 04

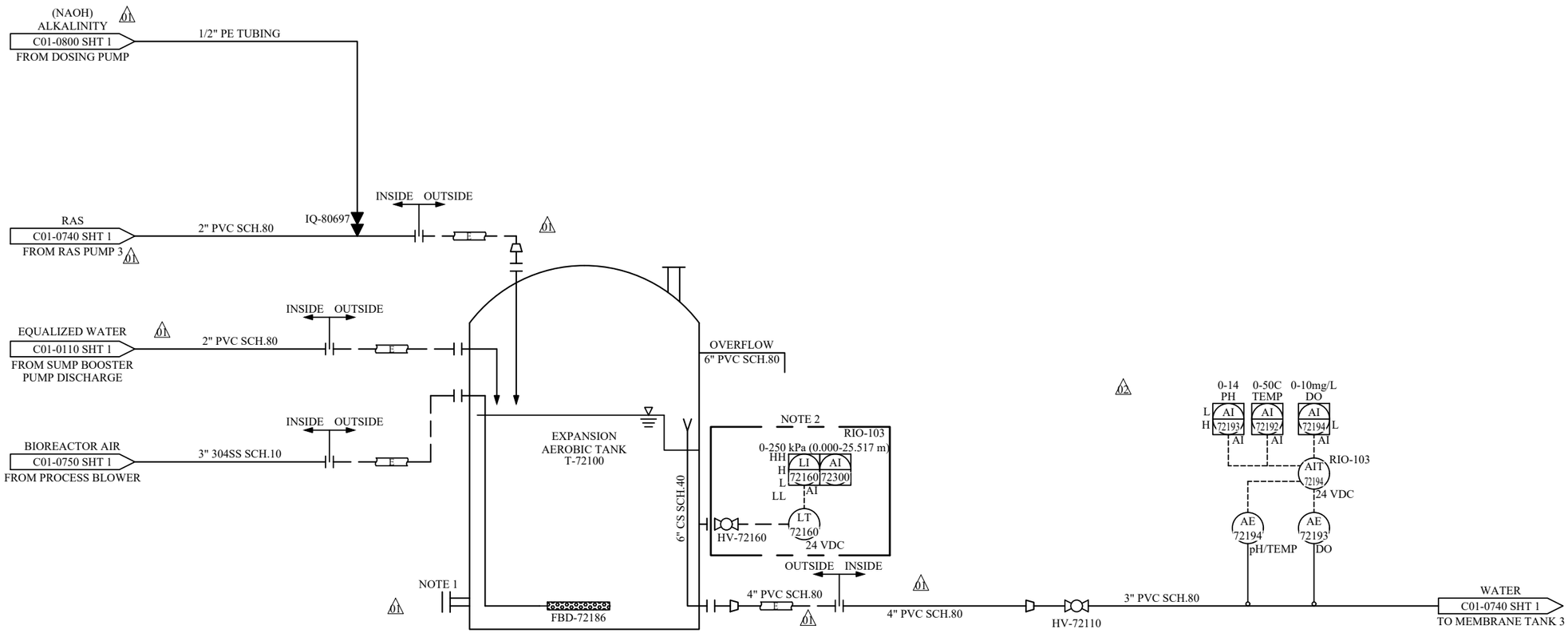

NOTES:

1. DOOR HATCH ACCESS.
2. PROTECTION COVER.

NOTE:
THE INFORMATION, SPECIFICATIONS AND DATA SHOWN ON THIS PRINT ARE FURNISHED BY AND ARE TO REMAIN THE PROPERTY OF H_2O INNOVATION.

THE PURPOSE OF THIS DOCUMENT IS TO FACILITATE THE INSTALLATION, MAINTENANCE AND OPERATION OF THE EQUIPMENT REPRESENTED BY SAID PRINT. NO OTHER USE OF THIS DOCUMENT SHALL BE MADE WITHOUT EXPRESS WRITTEN CONSENT FROM H_2O INNOVATION.

DRAWING REVISION

REV	DATE (DD/MM/YYYY)	REVISION DESCRIPTION	DRAWN	CHKD	ENG	APPVD
04	03/02/2021	AS INSTALLED	Y.D.	R.D.	R.D.	A.M.
03	13/11/2020	AS BUILT	Y.D.	R.D.	R.D.	A.M.
02	10/06/2020	FOR CONSTRUCTION	Y.D.	R.D.	R.D.	A.M.
01	13/05/2020	MODIFIED PER COMMENTS, MODIFIED INTERCONNECTION WITH MAIN PLANT	G.B.	R.D.	R.D.	A.M.
00	04/23/2020	INITIAL RELEASE	Y.D.	R.D.	H.C.	A.M.

h2o innovation
knowledge to share du savoir à partager

UNLESS NOTED OTHERWISE
INTERPRETATION: ANSI Y14.5
TOLERANCES
FRACTIONS: ±1/16"
DECIMALS 0.X: ±0.030
0.XX: ±0.015
ANGLES: ±0.5°
HOLE SIZES: ±1/64"
HOLE CENTERS: ±1/32"
DO NOT SCALE PRINTS

MELIADINE STP EXPANSION

83 M3/DAY

TITLE:
PIPING AND INSTRUMENTATION
PROCESS & INSTRUMENTATION DIAGRAM

SCALE: N/A

DRAWING NUMBER: 20C1131-C01-0720
SHEET: 1 of 1

REVISION 04

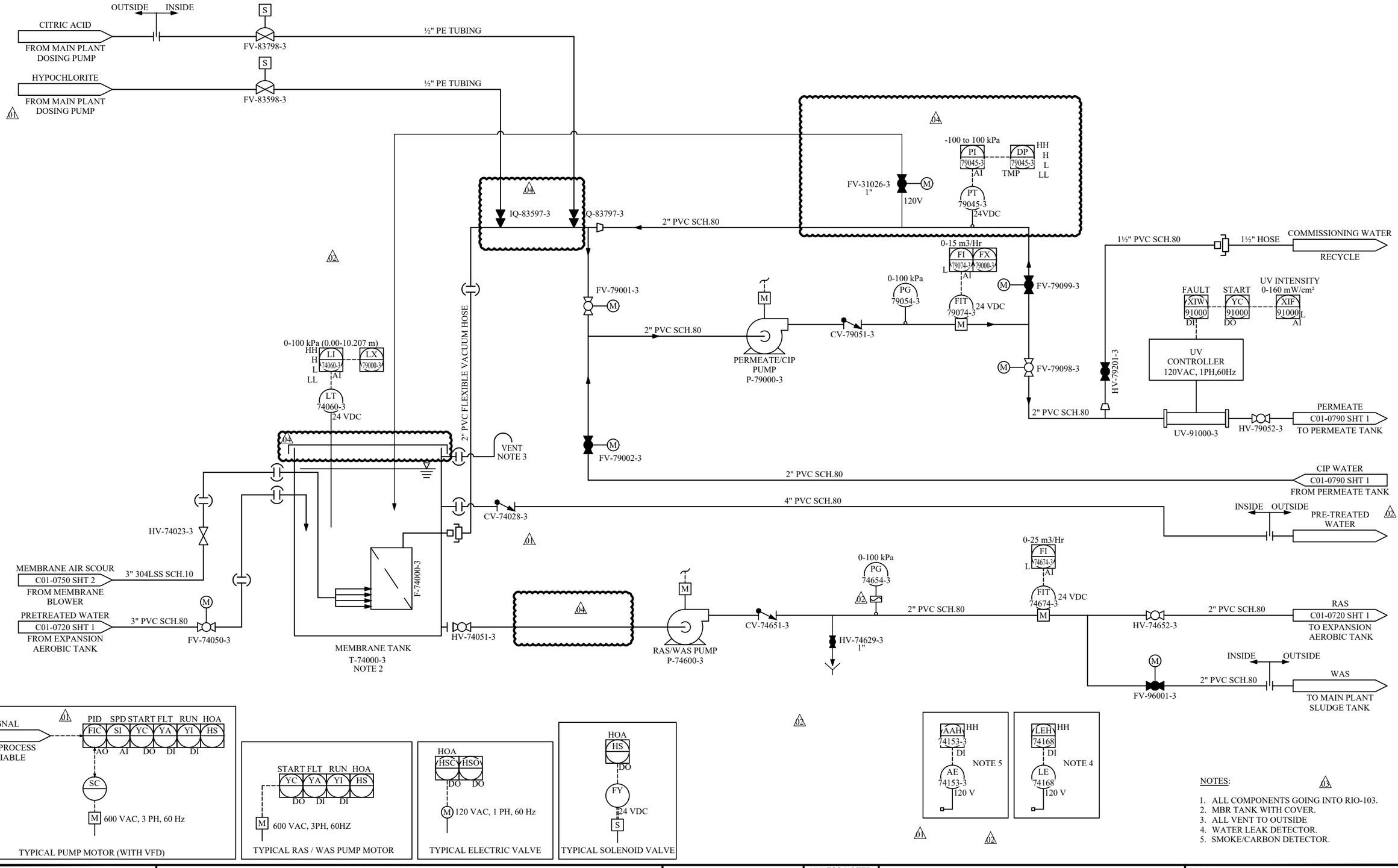

NOTES:

1. ALL COMPONENTS GOING INTO RIO-103.
2. MBR TANK WITH COVER.
3. ALL VENT TO OUTSIDE
4. WATER LEAK DETECTOR.
5. SMOKE/CARBON DETECTOR.

NOTE:
THE INFORMATION, SPECIFICATIONS AND DATA SHOWN ON THIS PRINT ARE FURNISHED BY AND ARE TO REMAIN THE PROPERTY OF H_2O INNOVATION.

THE PURPOSE OF THIS DOCUMENT IS TO FACILITATE THE INSTALLATION, MAINTENANCE AND OPERATION OF THE EQUIPMENT REPRESENTED BY SAID PRINT. NO OTHER USE OF THIS DOCUMENT SHALL BE MADE WITHOUT EXPRESS WRITTEN CONSENT FROM H_2O INNOVATION.

DRAWING REVISION

REV	DATE (DD/MM/YYYY)	REVISION DESCRIPTION	DRAWN	CHKD	ENG	APPVD
04	03/02/2021	AS INSTALLED	Y.D.	R.D.	R.D.	A.M.
03	13/11/2020	AS BUILT	Y.D.	R.D.	R.D.	A.M.
02	10/06/2020	FOR CONSTRUCTION	Y.D.	R.D.	R.D.	A.M.
01	13/05/2020	MODIFIED PER COMMENTS, MODIFIED INTERCONNECTION WITH MAIN PLANT	G.B.	R.D.	R.D.	A.M.
00	04/23/2020	INITIAL RELEASE	Y.D.	R.D.	H.C.	A.M.

h2o innovation
knowledge to share du savoir à partager

UNLESS NOTED OTHERWISE
INTERPRETATION: ANSI Y14.5
TOLERANCES
FRACTIONS: ±1/64"
DECIMALS X.X: ±0.030
X.XX: ±0.015
X.XXX: ±0.5°
ANGLES: ±1/64"
HOLE SIZES: ±1/32"
HOLE CENTERS:
DO NOT SCALE PRINTS

MELIADINE STP EXPANSION

83 M3/DAY

TITLE:
PIPING AND INSTRUMENTATION
PROCESS & INSTRUMENTATION DIAGRAM

SCALE:	DRAWING NUMBER:	REVISION
N/A	20C1131-C01-0740	04
	SHEET: 1 of 1	

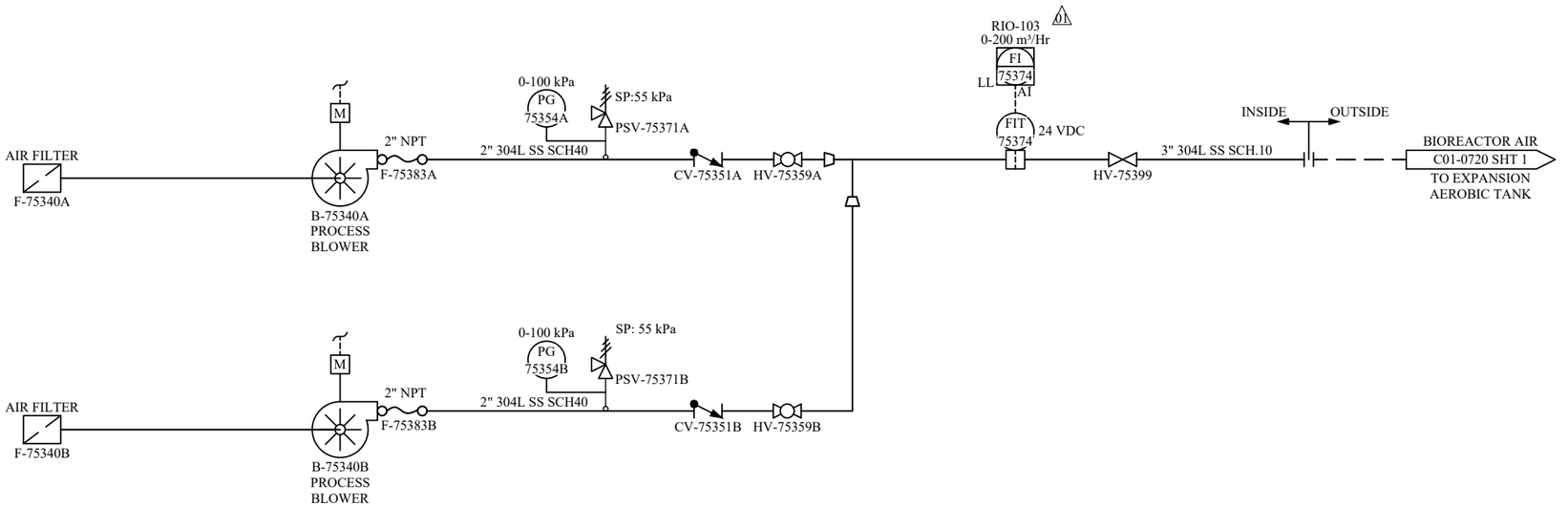

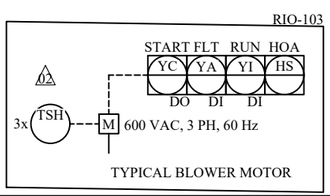

NOTE:
THE INFORMATION, SPECIFICATIONS AND DATA SHOWN ON THIS PRINT ARE FURNISHED BY AND ARE TO REMAIN THE PROPERTY OF H_2O INNOVATION.

THE PURPOSE OF THIS DOCUMENT IS TO FACILITATE THE INSTALLATION, MAINTENANCE AND OPERATION OF THE EQUIPMENT REPRESENTED BY SAID PRINT. NO OTHER USE OF THIS DOCUMENT SHALL BE MADE WITHOUT EXPRESS WRITTEN CONSENT FROM H_2O INNOVATION.

DRAWING REVISION

REV	DATE (DD/MM/YYYY)	REVISION DESCRIPTION	DRAWN	CHKD	ENG	APPVD
04	03/02/2021	AS INSTALLED	Y.D.	R.D.	R.D.	A.M.
03	13/11/2020	AS BUILT	Y.D.	R.D.	R.D.	A.M.
02	10/06/2020	FOR CONSTRUCTION	Y.D.	R.D.	R.D.	A.M.
01	13/05/2020	MODIFIED PER COMMENTS, MODIFIED INTERCONNECTION WITH MAIN PLANT	G.B.	R.D.	R.D.	A.M.
00	04/23/2020	INITIAL RELEASE	Y.D.	R.D.	H.C.	A.M.

h2o innovation
knowledge to share du savoir à partager

UNLESS NOTED OTHERWISE
INTERPRETATION: ANSI Y14.5
TOLERANCES
FRACTIONS: ±1/64"
DECIMALS 0.X: ±0.030
0.XX: ±0.015
ANGLES: ±0.5°
HOLE SIZES: ±1/64"
HOLE CENTERS: ±1/32"
DO NOT SCALE PRINTS

MELIADINE STP EXPANSION

83 M3/DAY

TITLE:
PIPING AND INSTRUMENTATION
PROCESS & INSTRUMENTATION DIAGRAM

SCALE: N/A

DRAWING NUMBER: 20C1131-C01-0750
SHEET: 1 of 2

REVISION 04

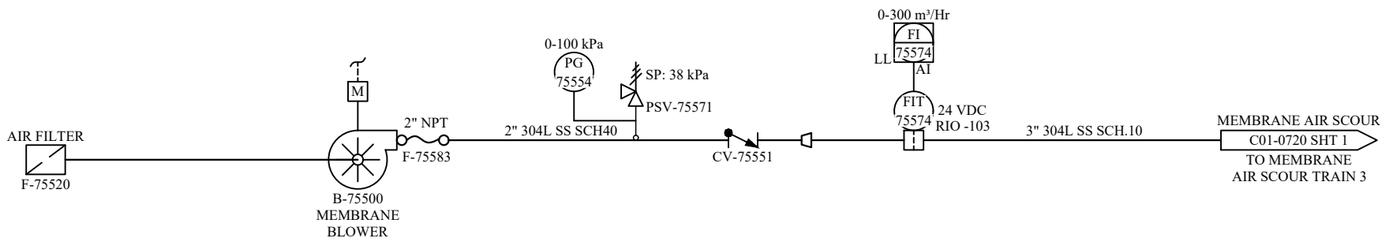

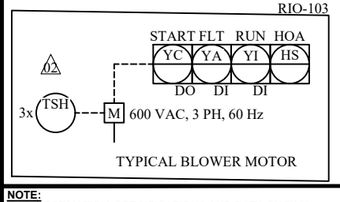

NOTE:
THE INFORMATION, SPECIFICATIONS AND DATA SHOWN ON THIS PRINT ARE FURNISHED BY AND ARE TO REMAIN THE PROPERTY OF H_2O INNOVATION.

THE PURPOSE OF THIS DOCUMENT IS TO FACILITATE THE INSTALLATION, MAINTENANCE AND OPERATION OF THE EQUIPMENT REPRESENTED BY SAID PRINT. NO OTHER USE OF THIS DOCUMENT SHALL BE MADE WITHOUT EXPRESS WRITTEN CONSENT FROM H_2O INNOVATION.

DRAWING REVISION

REV	DATE (DD/MM/YYYY)	REVISION DESCRIPTION	DRAWN	CHKD	ENG	APPVD
04	03/02/2021	AS INSTALLED	Y.D.	R.D.	R.D.	A.M.
03	13/11/2020	AS BUILT	Y.D.	R.D.	R.D.	A.M.
02	10/06/2020	FOR CONSTRUCTION	Y.D.	R.D.	R.D.	A.M.
01	13/05/2020	MODIFIED PER COMMENTS, MODIFIED INTERCONNECTION WITH MAIN PLANT	G.B.	R.D.	R.D.	A.M.
00	04/23/2020	INITIAL RELEASE	Y.D.	R.D.	H.C.	A.M.

h2o innovation
knowledge to share du savoir à partager

UNLESS NOTED OTHERWISE
INTERPRETATION: ANSI Y14.5
TOLERANCES
FRACTIONS: ±1/16"
DECIMALS 0.X: ±0.030
0.XX: ±0.015
ANGLES: ±0.5°
HOLE SIZES: ±1/32"
HOLE CENTERS: ±1/32"
DO NOT SCALE PRINTS

MELIADINE STP EXPANSION

83 M3/DAY

TITLE:
PIPING AND INSTRUMENTATION
PROCESS & INSTRUMENTATION DIAGRAM

SCALE:	DRAWING NUMBER:	REVISION
N/A	20C1131-C01-0750	04
	SHEET: 2 of 2	

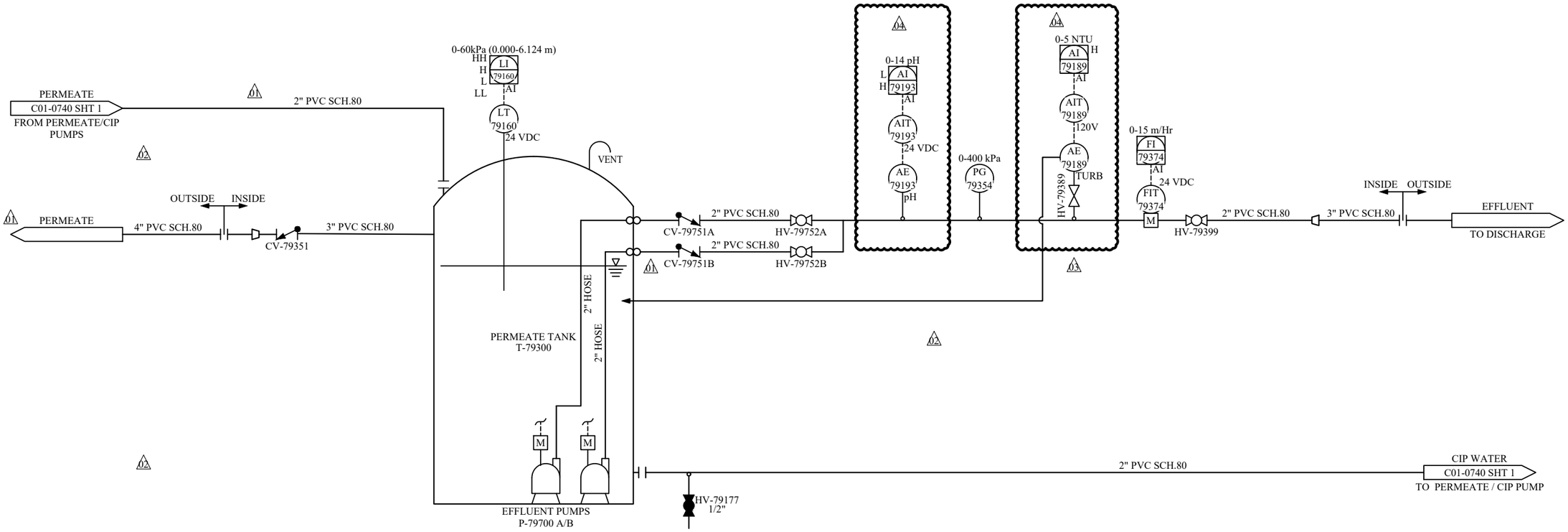

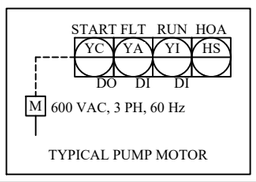

NOTES:

1. ALL COMPONANTS GOING INTO RIO-103.

NOTE:
THE INFORMATION, SPECIFICATIONS AND DATA SHOWN ON THIS PRINT ARE FURNISHED BY AND ARE TO REMAIN THE PROPERTY OF H_2O INNOVATION.

THE PURPOSE OF THIS DOCUMENT IS TO FACILITATE THE INSTALLATION, MAINTENANCE AND OPERATION OF THE EQUIPMENT REPRESENTED BY SAID PRINT. NO OTHER USE OF THIS DOCUMENT SHALL BE MADE WITHOUT EXPRESS WRITTEN CONSENT FROM H_2O INNOVATION.

DRAWING REVISION

REV	DATE (DD/MM/YYYY)	REVISION DESCRIPTION	DRAWN	CHKD	ENG	APPVD
04	03/02/2021	AS INSTALLED	Y.D.	R.D.	R.D.	A.M.
03	13/11/2020	AS BUILT	Y.D.	R.D.	R.D.	A.M.
02	10/06/2020	FOR CONSTRUCTION	Y.D.	R.D.	R.D.	A.M.
01	13/05/2020	MODIFIED PER COMMENTS, MODIFIED INTERCONNECTION WITH MAIN PLANT	G.B.	R.D.	R.D.	A.M.
00	04/23/2020	INITIAL RELEASE	Y.D.	R.D.	H.C.	A.M.

h2o innovation
knowledge to share du savoir à partager

UNLESS NOTED OTHERWISE
INTERPRETATION: ANSI Y14.5
TOLERANCES
FRACTIONS: ±1/64"
DECIMALS 0.X: ±0.030
0.XX: ±0.015
ANGLES: ±0.5°
HOLE SIZES: ±1/64"
HOLE CENTERS: ±1/32"
DO NOT SCALE PRINTS

MELIADINE STP EXPANSION

83 M3/DAY

TITLE:
PIPING AND INSTRUMENTATION
PROCESS & INSTRUMENTATION DIAGRAM

SCALE: N/A

DRAWING NUMBER: 20C1131-C01-0790

SHEET: 1 of 1

REVISION 04

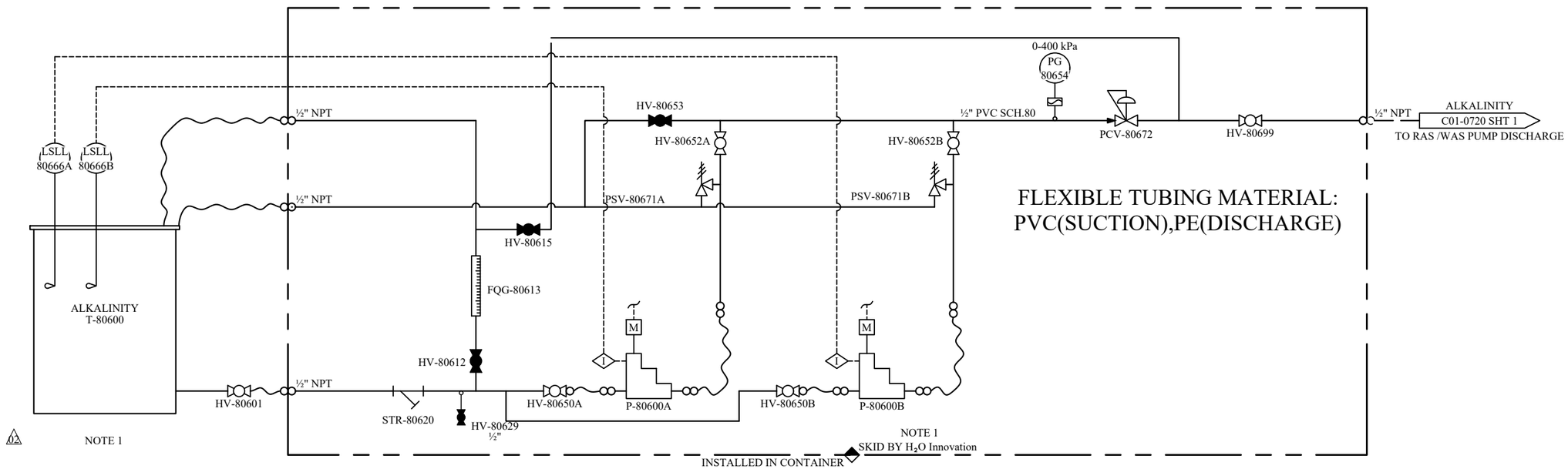

FLEXIBLE TUBING MATERIAL:
PVC(SUCTION),PE(DISCHARGE)

SODIUM HYDROXIDE, 25%, ALKALINITY ADJUSTMENT
01 CHEMICAL DOSING SYSTEM

RIO-103

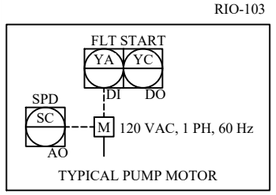

TYPICAL PUMP MOTOR

NOTES:

1. TANK TO BE DOUBLE-WALL STORAGE TYPE

NOTE:
THE INFORMATION, SPECIFICATIONS AND DATA SHOWN ON THIS PRINT ARE FURNISHED BY AND ARE TO REMAIN THE PROPERTY OF H_2O INNOVATION.

THE PURPOSE OF THIS DOCUMENT IS TO FACILITATE THE INSTALLATION, MAINTENANCE AND OPERATION OF THE EQUIPMENT REPRESENTED BY SAID PRINT. NO OTHER USE OF THIS DOCUMENT SHALL BE MADE WITHOUT EXPRESS WRITTEN CONSENT FROM H_2O INNOVATION.

DRAWING REVISION

REV	DATE (DD/MM/YYYY)	REVISION DESCRIPTION	DRAWN	CHKD	ENG	APPVD
04	03/02/2021	AS INSTALLED	Y.D.	R.D.	R.D.	A.M.
03	13/11/2020	AS BUILT	Y.D.	R.D.	R.D.	A.M.
02	10/06/2020	FOR CONSTRUCTION	Y.D.	R.D.	R.D.	A.M.
01	13/05/2020	MODIFIED PER COMMENTS, MODIFIED INTERCONNECTION WITH MAIN PLANT	G.B.	R.D.	R.D.	A.M.
00	04/23/2020	INITIAL RELEASE	Y.D.	R.D.	H.C.	A.M.

h2o innovation
knowledge to share du savoir à partager

UNLESS NOTED OTHERWISE
INTERPRETATION: ANSI Y14.5
TOLERANCES
FRACTIONS: ±1/64"
DECIMALS 0.X: ±0.030
0.XX: ±0.015
ANGLES: ±0.5°
HOLE SIZES: ±1/64"
HOLE CENTERS: ±1/32"
DO NOT SCALE PRINTS

MELIADINE STP EXPANSION

83 M3/DAY

TITLE:
PIPING AND INSTRUMENTATION
PROCESS & INSTRUMENTATION DIAGRAM

SCALE: N/A

DRAWING NUMBER: 20C1131-C01-0800

SHEET: 1 of 1

REVISION 04

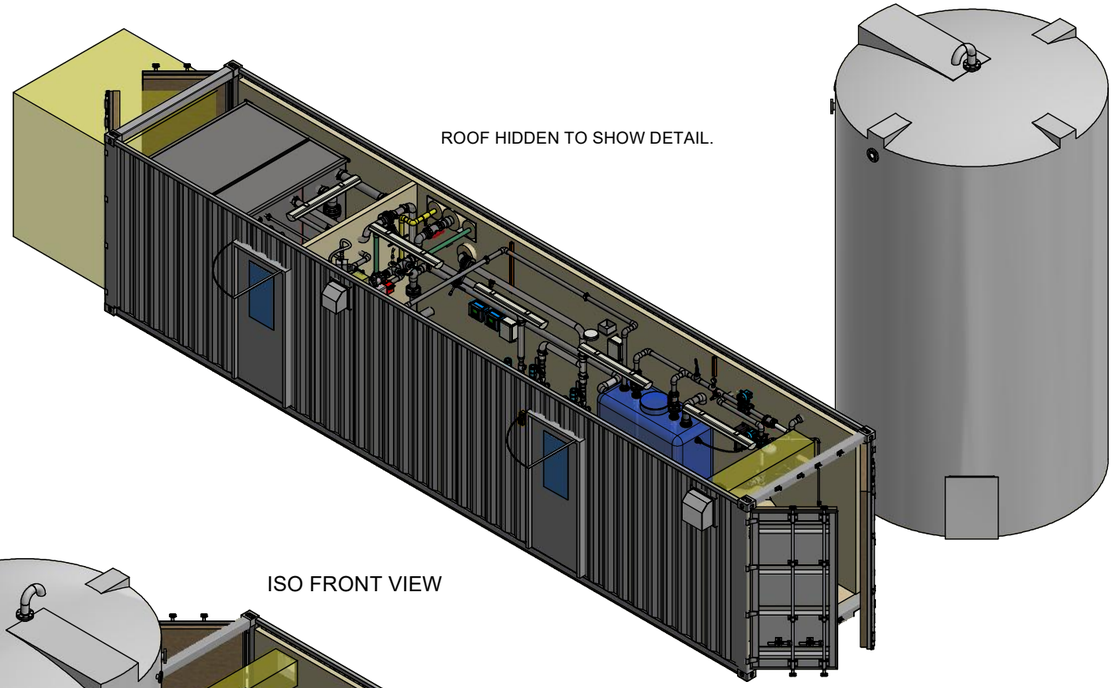

ISO FRONT VIEW

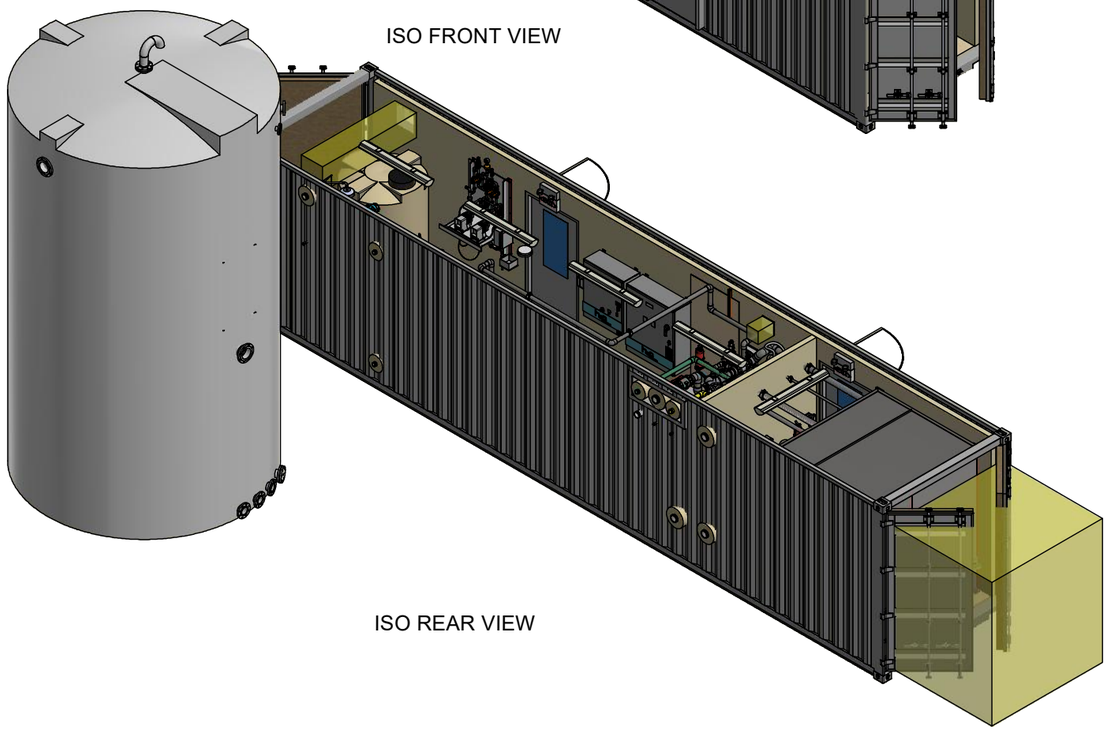

ISO REAR VIEW

NOTES:

1. REFERENCE P&ID: 20C1131-C01-0001
2. APPROXIMATE SHIPPING WEIGHT: 22 000 LBS.
3. ROOF INSULATION TO BE MINIMUM R20.
4. WALL INSULATION TO BE MINIMUM R20.
5. FLOOR INSULATION TO BE MINIMUM R20.
6. MINIMUM INSIDE DIMENSIONS ARE 84'5'' WIDE X 102'' HIGH AND XXX'' LONG.
7. ENSURE THAT LIFTING LUGS ARE USED FOR LIFTING TANKS AND/OR BUILDINGS. LIFTING LUGS FOR TANKS ARE LOCATED AT THE TOP OF THE TANK.
8. CLEARANCE FOR AIR FLOW AND SERVICE REQUIRED AROUND PANEL AIR CONDITIONERS. REFER TO ELECTRICAL DRAWINGS FOR REQUIREMENTS.
9. ALL WELDS, EXCEPT FILLET WELDS, ARE TO BE GROUND FLUSH IN THE FLAT POSITION WITHOUT DISHING.
10. ALL WELDS ARE TO BE 100% VISUALLY INSPECTED.
11. COMPLIANCE WITH CSA W47.1 CERTIFICATION OF COMPANIES FOR FUSION WELDING OF STEEL AND CSA W59 WELDED STEEL CONSTRUCTION REQUIRED.
12. NO VERTICAL DOWN WELDS ARE ALLOWED UNLESS CERTIFIED PER CSA W59 AND APPROVED BY H2O INNOVATION.
13. STITCH WELDS ARE NOT ALLOWED UNLESS PRE-APPROVED BY H2O INNOVATION.
14. NO VERTICAL DOWN WELDS ARE ALLOWED UNLESS CERTIFIED PER AWS D1.6 AND APPROVED BY H2O INNOVATION.
15. STRUCTURAL STEEL WELDING AS PER STRUCTURAL WELDING CODE - STAINLESS STEEL, AWS D1.6.
16. MATERIAL IS TYPE 304L SS. THE MINIMUM YIELD STRENGTH REQUIRED FOR ALL MATERIAL IS 36 KSI.
17. HOLLOW STRUCTURAL STEEL SECTIONS PER ASTM A269.
18. ANGLES AND CHANNELS PER ASTM A276, AND PLATE PER ASTM A240 OR A666. SHAPES FORMED FROM PLATE ARE ACCEPTABLE.
19. STRUCTURAL FRAME WELDS AND AREAS WITH IRON CONTAMINATION TO BE TREATED WITH PICKLE PASTE COMPOUND AND WASHED CLEAN.
20. PUT 1/8'' RADIUS ON ALL CORNERS, FOR SAFETY.
21. BREAK ALL SHARP EDGES, AND REMOVE SPATTER.
22. SINGLE MEMBERS TO BE CONTINUOUS. SEAMED MEMBERS ARE NOT ACCEPTABLE.
23. ALL STAINLESS STEEL PIPING TO BE ASTM A312. ALL STAINLESS STEEL FITTINGS TO BE ASTM A403. FLANGES TO BE ASTM A182 AND ANSI B 16.5.
24. CLASS 150 FITTINGS SHALL MEET MSS SP114 STANDARDS FOR SIZES 1/8'' THRU 4''. THREADS SHALL MEET ANSI B1.20.1. MATERIAL IS ASTM A351 GRADE CF8M OR ASTM A182 GRADE 316 OR ASTM A276.
25. ALL STAINLESS STEEL PIPING TO BE WELDED TO ASME B31.1, 100% PENETRATION AND BACK GASSED WITH ARGON.
26. WELDER CERTIFICATIONS FOR ALL WELDERS MUST BE PROVIDED TO H2O INNOVATION.
27. COMPLETED ASSEMBLY MUST BE LEAK TESTED TO 50 PSIG.
28. TANK 4 HOUR FILL AND HOLD HYDRO TEST REQUIRED.
29. UNWITNESSED TEST REPORT MUST BE PROVIDED.
30. ALL STAINLESS STEEL TO BE PICKLED (DIPPED) AND PASSIVATED TO ASTM A380.
31. BOLTS AND NUTS ARE STAINLESS STEEL TYPE 316.
32. MECHANICAL PROPERTIES PER CONDITION CW OF ASTM F593/F594.
33. THREADS PER ANSI/ASME B1.1 CLASS 2A.
34. WASHERS AND & LOCK WASHERS ARE STAINLESS STEEL TYPE 316 WITH DIMENSIONS PER ASME B18.21.1.
35. ALL PVC PIPE TO BE SCHEDULE 80, GRAY. PIPE MATERIAL TO CONFORM TO ASTM D1784. PHYSICAL DIMENSIONS, SCHEDULES, AND TOLERANCES TO CONFORM TO ASTM D1785.
36. ALL PVC FITTINGS TO BE SCHEDULE 80, GRAY. SOCKET FITTINGS TO CONFORM TO ASTM D2467.
37. PVC FLANGES 3" AND LARGER TO BE VAN STONE STYLE WITH GLASS FILLED PVC RING. PVC FLANGES 2" AND SMALLER TO BE VAN STONE STYLE WITH PVC RING, PVC FLANGES TO MEET CLASS 150 BOLT HOLE PATTERN PER ANSI B16.5.
38. PVC PRIMER TO CONFORM TO ASTM F656. PVC SOLVENT CEMENT TO CONFORM TO ASTM D2564.
39. EXPOSED PVC PIPING REQUIRES SUITABLE UV PROTECTIVE COATING ON SITE. NOT BY H2O INNOVATION.
40. ALL GASKETS TO CONFORM TO ASTM F477.
41. TAP (1/2'' NPT OR SMALLER ONLY) INTO PVC / CPVC FITTING IS ALLOWED, BUT ONLY IN SPECIFIC LOCATIONS WHERE NO ADEQUATE FITTING IS PROVIDED.
42. TUBING MATERIAL IS NYLON.
43. ELECTRICAL CONDUIT MATERIAL IS RIGID PVC.

NOTE:
THE INFORMATION, SPECIFICATIONS AND DATA SHOWN ON THIS PRINT ARE FURNISHED BY AND ARE TO REMAIN THE PROPERTY OF H_2O INNOVATION.

THE PURPOSE OF THIS DOCUMENT IS TO FACILITATE THE INSTALLATION, MAINTENANCE AND OPERATION OF THE EQUIPMENT REPRESENTED BY SAID PRINT. NO OTHER USE OF THIS DOCUMENT SHALL BE MADE WITHOUT EXPRESS WRITTEN CONSENT FROM H_2O INNOVATION.

DRAWING REVISION

REV	DATE (DD/MM/YYYY)	REVISION DESCRIPTION	DRAWN	PEER	ENG	APPVD
03	2021-03-02	AS BUILT	Y.D.	R.D.	R.D.	A.M.
02	2020-11-12	AS BUILT	M.C.	R.D.	R.D.	A.M.
01	2020-06-02	REVISED AS PER ENGINEER COMMENTS	M.C.	R.D.	R.D.	A.M.
00	2020-05-21	INITIAL RELEASE	M.C.	R.D.	R.D.	A.M.

h2o innovation
knowledge to share.du savoir à partager

UNLESS NOTED OTHERWISE
INTERPRETATION: ANSI Y14.5
TOLERANCES
FRACTIONS: ±1/64"
DECIMALS 0.X: ±0.030
0.XX: ±0.015
ANGLES: ±0.5°
HOLE SIZES: ±1/64"
HOLE CENTERS: ±1/64"
DO NOT SCALE PRINTS

MELIADINE WW EXPANSION

MELIADINE , NU

TITLE:
WASTE WATER CONTAINER
GENERAL ARRANGEMENT

SCALE:	DRAWING NUMBER:	REVISION
N/A	20C1131-B01-0001 SHEET: 1 OF 5	03

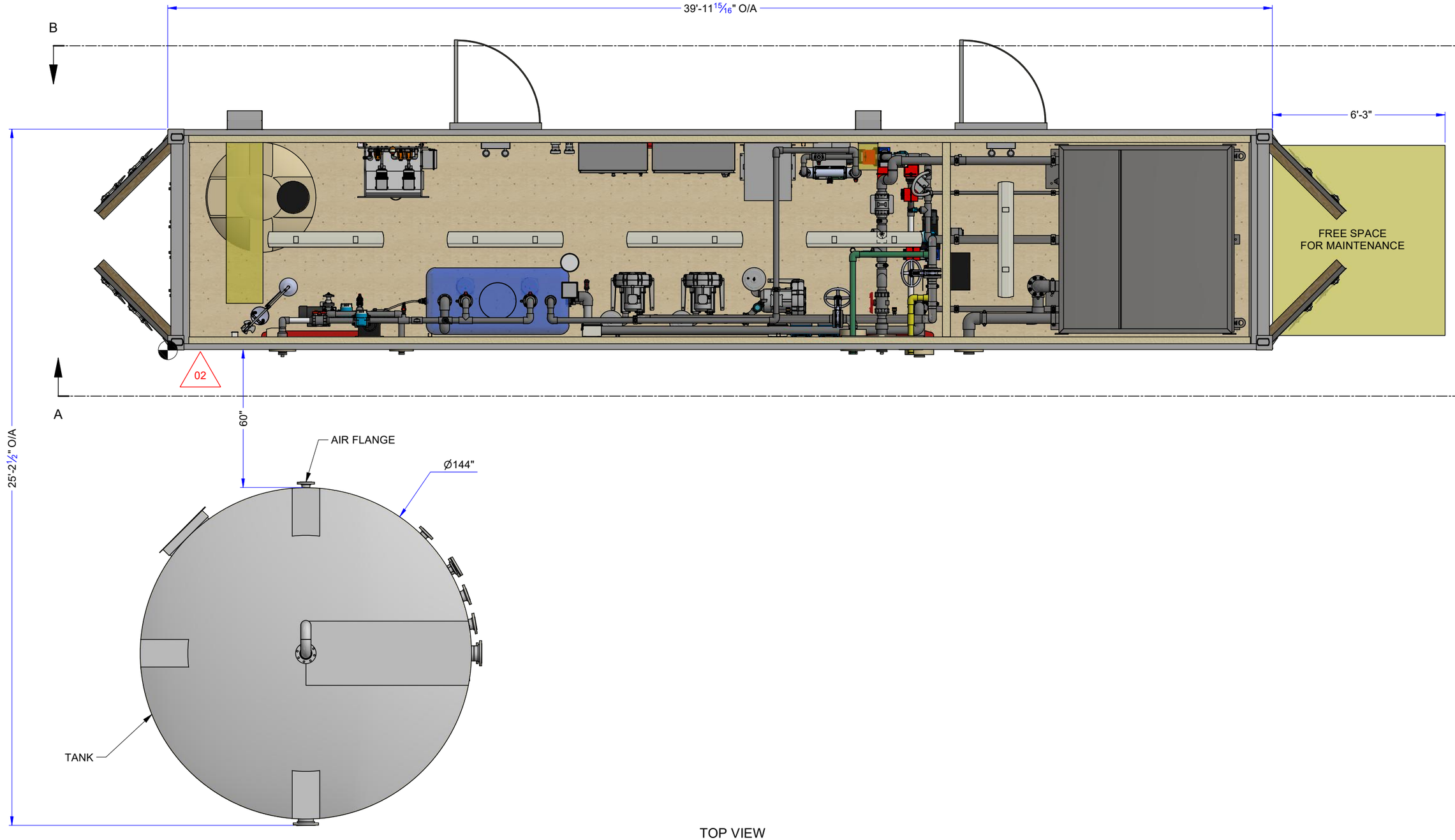

TOP VIEW

NOTE:
THE INFORMATION, SPECIFICATIONS AND DATA SHOWN ON THIS PRINT ARE FURNISHED BY AND ARE TO REMAIN THE PROPERTY OF H_2O INNOVATION.

THE PURPOSE OF THIS DOCUMENT IS TO FACILITATE THE INSTALLATION, MAINTENANCE AND OPERATION OF THE EQUIPMENT REPRESENTED BY SAID PRINT. NO OTHER USE OF THIS DOCUMENT SHALL BE MADE WITHOUT EXPRESS WRITTEN CONSENT FROM H_2O INNOVATION.

DRAWING REVISION

REV	DATE (DD/MM/YYYY)	REVISION DESCRIPTION	DRAWN	PEER	ENG	APPVD
03	2021-03-02	AS BUILT	Y.D.	R.D.	R.D.	A.M.
02	2020-11-12	AS BUILT	M.C.	R.D.	R.D.	A.M.
01	2020-06-02	REVISED AS PER ENGINEER COMMENTS	M.C.	R.D.	R.D.	A.M.
00	2020-05-21	INITIAL RELEASE	M.C.	R.D.	R.D.	A.M.

h2o innovation
knowledge to share.du savoir à partager

UNLESS NOTED OTHERWISE
INTERPRETATION: ANSI Y14.5
TOLERANCES
FRACTIONS: ±1/64"
DECIMALS 0.X: ±0.030
0.XX: ±0.015
ANGLES: ±0.5°
HOLE SIZES: ±1/64"
HOLE CENTERS: ±1/64"
DO NOT SCALE PRINTS

MELIADINE WW EXPANSION

MELIADINE , NU

TITLE:
WASTE WATER CONTAINER
GENERAL ARRANGEMENT

SCALE:	DRAWING NUMBER:	REVISION
N.T.S	20C1131-B01-0001 SHEET: 2 OF 5	03

NOZZLE#	DESCRIPTION	MATERIAL	DIAMETER	CONNECTION
A	EQUALIZED WATER FROM MAIN PLANT SUMP PUMPS DISCHARGE LINE	PVC, SCH.80	2"	CUT GROOVE
B	EQUALIZED WATER TO EXPANSION AEROBIC TANK	PVC, SCH.80	2"	CUT GROOVE
C	MEMBRANE TANK VENT TO OUTSIDE	PVC, SCH.80	4"	CUT GROOVE
D	MEMBRANE TANK OVERFLOW	PVC, SCH.80	4"	CUT GROOVE
E	PERMEATE TANK OVERFLOW	PVC, SCH.80	4"	CUT GROOVE
F	PERMEATE EFFLUENT TO DISCHARGE	PVC, SCH.80	3"	CUT GROOVE
G	BIOREACTOR AIR TO EXPANSION AEROBIC TANK	SS 304, SCH.10	3"	CUT GROOVE
H	WAS TO MAIN PLANT SLUDGE TANK	PVC, SCH.80	2"	CUT GROOVE
I	RAS TO EXPANSION AEROBIC TANK	PVC, SCH.80	2"	CUT GROOVE
J	PRETREATED WATER FROM EXPANSION AEROBIC TANK	PVC, SCH.80	4"	CUT GROOVE
K	POTABLE WATER	PVC, SCH.80	1/2"	FNPT
L	CITRIC ACID	PVC, SCH.80	1/2"	FNPT
M	HYPOCHLORITE	PVC, SCH.80	1/2"	FNPT

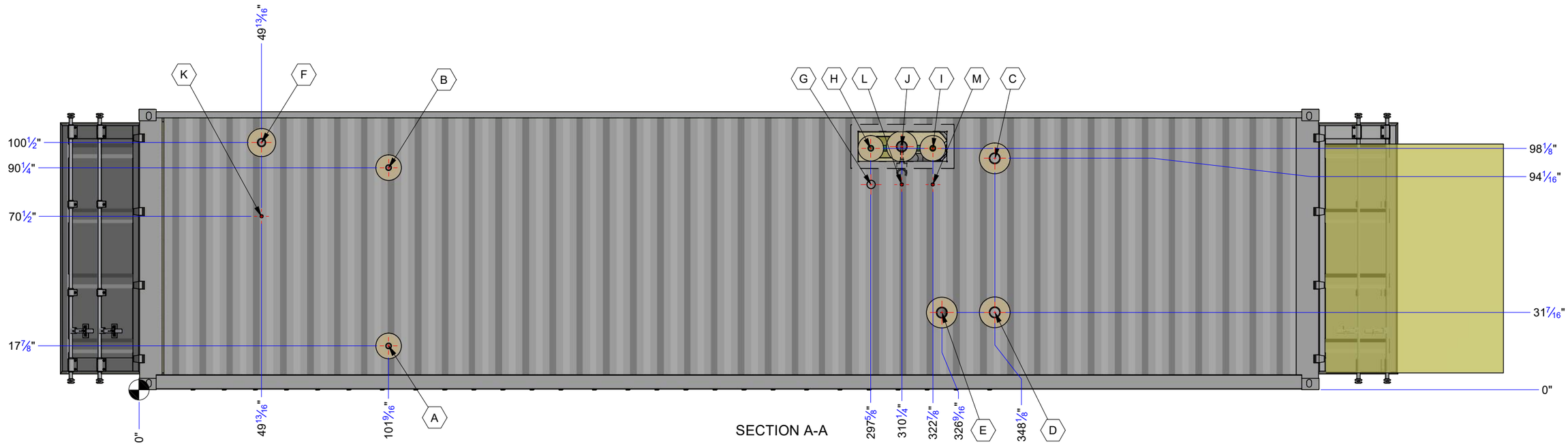

SECTION A-A

NOTE:
THE INFORMATION, SPECIFICATIONS AND DATA SHOWN ON THIS PRINT ARE FURNISHED BY AND ARE TO REMAIN THE PROPERTY OF H_2O INNOVATION.

THE PURPOSE OF THIS DOCUMENT IS TO FACILITATE THE INSTALLATION, MAINTENANCE AND OPERATION OF THE EQUIPMENT REPRESENTED BY SAID PRINT. NO OTHER USE OF THIS DOCUMENT SHALL BE MADE WITHOUT EXPRESS WRITTEN CONSENT FROM H_2O INNOVATION.

DRAWING REVISION

REV	DATE (DD/MM/YYYY)	REVISION DESCRIPTION	DRAWN	PEER	ENG	APPVD
03	2021-03-02	AS BUILT	Y.D.	R.D.	R.D.	A.M.
02	2020-11-12	AS BUILT	M.C.	R.D.	R.D.	A.M.
01	2020-06-02	REVISED AS PER ENGINEER COMMENTS	M.C.	R.D.	R.D.	A.M.
00	2020-05-21	INITIAL RELEASE	M.C.	R.D.	R.D.	A.M.

h2o innovation
knowledge to share.du savoir à partager

UNLESS NOTED OTHERWISE
INTERPRETATION: ANSI Y14.5
TOLERANCES
FRACTIONS: ±1/64"
DECIMALS 0.X: ±0.030
0.XX: ±0.015
ANGLES: ±0.5°
HOLE SIZES: ±1/64"
HOLE CENTERS: ±1/64"
DO NOT SCALE PRINTS

MELIADINE WW EXPANSION

MELIADINE , NU

TITLE:
WASTE WATER CONTAINER
GENERAL ARRANGEMENT

SCALE:	DRAWING NUMBER:	REVISION
N/A	20C1131-B01-0001 SHEET: 3 OF 5	03

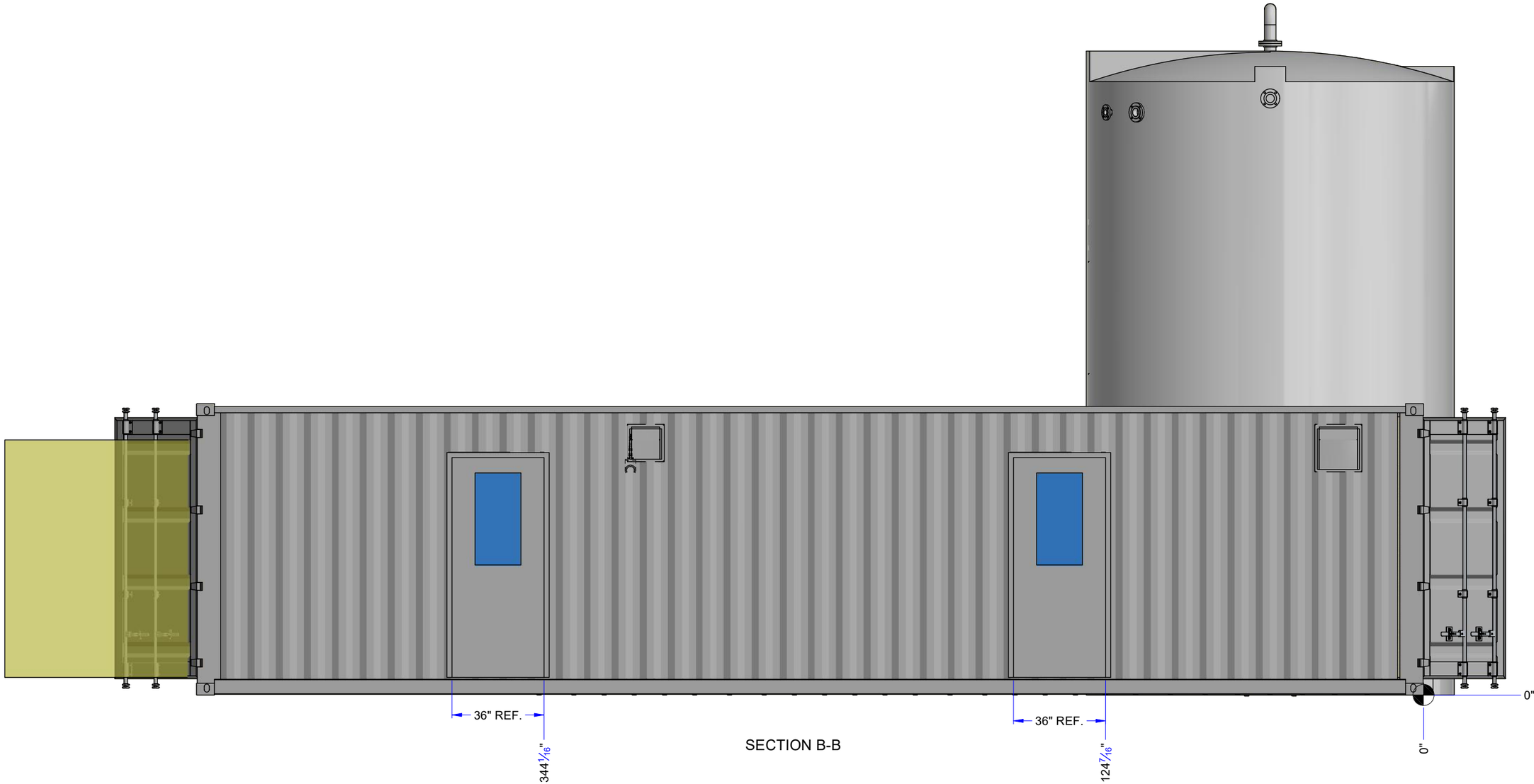

SECTION B-B

NOTE:
THE INFORMATION, SPECIFICATIONS AND DATA SHOWN ON THIS PRINT ARE FURNISHED BY AND ARE TO REMAIN THE PROPERTY OF H_2O INNOVATION.

THE PURPOSE OF THIS DOCUMENT IS TO FACILITATE THE INSTALLATION, MAINTENANCE AND OPERATION OF THE EQUIPMENT REPRESENTED BY SAID PRINT. NO OTHER USE OF THIS DOCUMENT SHALL BE MADE WITHOUT EXPRESS WRITTEN CONSENT FROM H_2O INNOVATION.

DRAWING REVISION

REV	DATE (YYYY-MM-DD)	REVISION DESCRIPTION	DRAWN	PEER	ENG	APPVD
03	2021-03-02	AS BUILT	Y.D.	R.D.	R.D.	A.M.
02	2020-11-12	AS BUILT	M.C.	R.D.	R.D.	A.M.
01	2020-06-02	REVISED AS PER ENGINEER COMMENTS	M.C.	R.D.	R.D.	A.M.
00	2020-05-21	INITIAL RELEASE	M.C.	R.D.	R.D.	A.M.

h2o innovation
knowledge to share.du savoir à partager

UNLESS NOTED OTHERWISE
INTERPRETATION: ANSI Y14.5
TOLERANCES:
FRACTIONS: ±1/64"
DECIMALS 0.X: ±0.030
0.XX: ±0.015
ANGLES: ±0.5°
HOLE SIZES: ±1/64"
HOLE CENTERS: ±1/64"
DO NOT SCALE PRINTS

MELIADINE WW EXPANSION

MELIADINE , NU

TITLE:
WASTE WATER CONTAINER
GENERAL ARRANGEMENT

SCALE:	DRAWING NUMBER:	REVISION
N/A	20C1131-B01-0001 SHEET: 4 OF 5	03

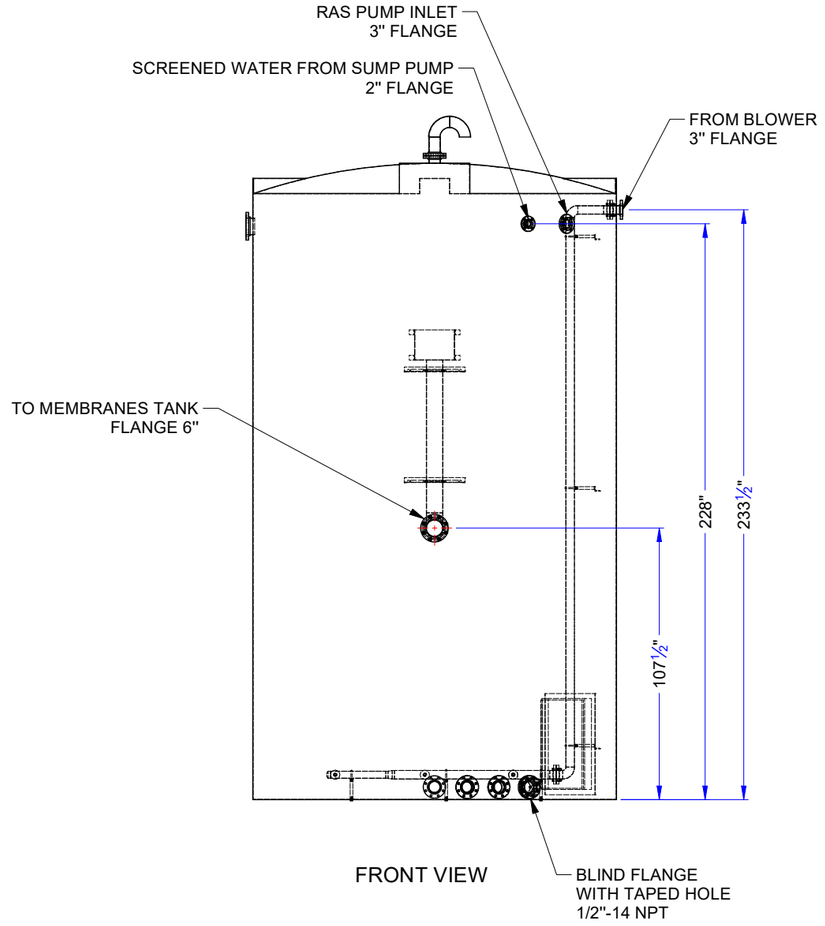

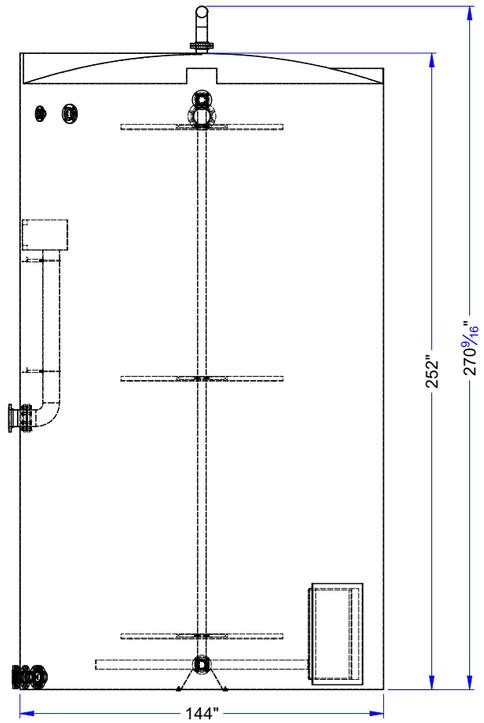

NOTE:
THE INFORMATION, SPECIFICATIONS AND DATA SHOWN ON THIS PRINT ARE FURNISHED BY AND ARE TO REMAIN THE PROPERTY OF H_2O INNOVATION.

THE PURPOSE OF THIS DOCUMENT IS TO FACILITATE THE INSTALLATION, MAINTENANCE AND OPERATION OF THE EQUIPMENT REPRESENTED BY SAID PRINT. NO OTHER USE OF THIS DOCUMENT SHALL BE MADE WITHOUT EXPRESS WRITTEN CONSENT FROM H_2O INNOVATION.

DRAWING REVISION

REV	DATE (DD/MM/YYYY)	REVISION DESCRIPTION	DRAWN	PEER	ENG	APPVD
03	2021-03-02	AS BUILT	Y.D.	R.D.	R.D.	A.M.
02	2020-11-12	AS BUILT	M.C.	R.D.	R.D.	A.M.
01	2020-06-02	REVISED AS PER ENGINEER COMMENTS	M.C.	R.D.	R.D.	A.M.
00	2020-05-21	INITIAL RELEASE	M.C.	R.D.	R.D.	A.M.

h2o innovation
knowledge to share.du savoir à partager

UNLESS NOTED OTHERWISE
INTERPRETATION: ANSI Y14.5
TOLERANCES
FRACTIONS: ±1/64"
DECIMALS 0.X: ±0.030
0.XX: ±0.015
ANGLES: ±0.5°
HOLE SIZES: ±1/64"
HOLE CENTERS: ±1/64"
DO NOT SCALE PRINTS

MELIADINE WW EXPANSION

MELIADINE , NU

TITLE:
WASTE WATER CONTAINER
GENERAL ARRANGEMENT

SCALE:	DRAWING NUMBER:	REVISION
N/A	20C1131-B01-0001 SHEET: 5 OF 5	03

Appendix B : Current STP

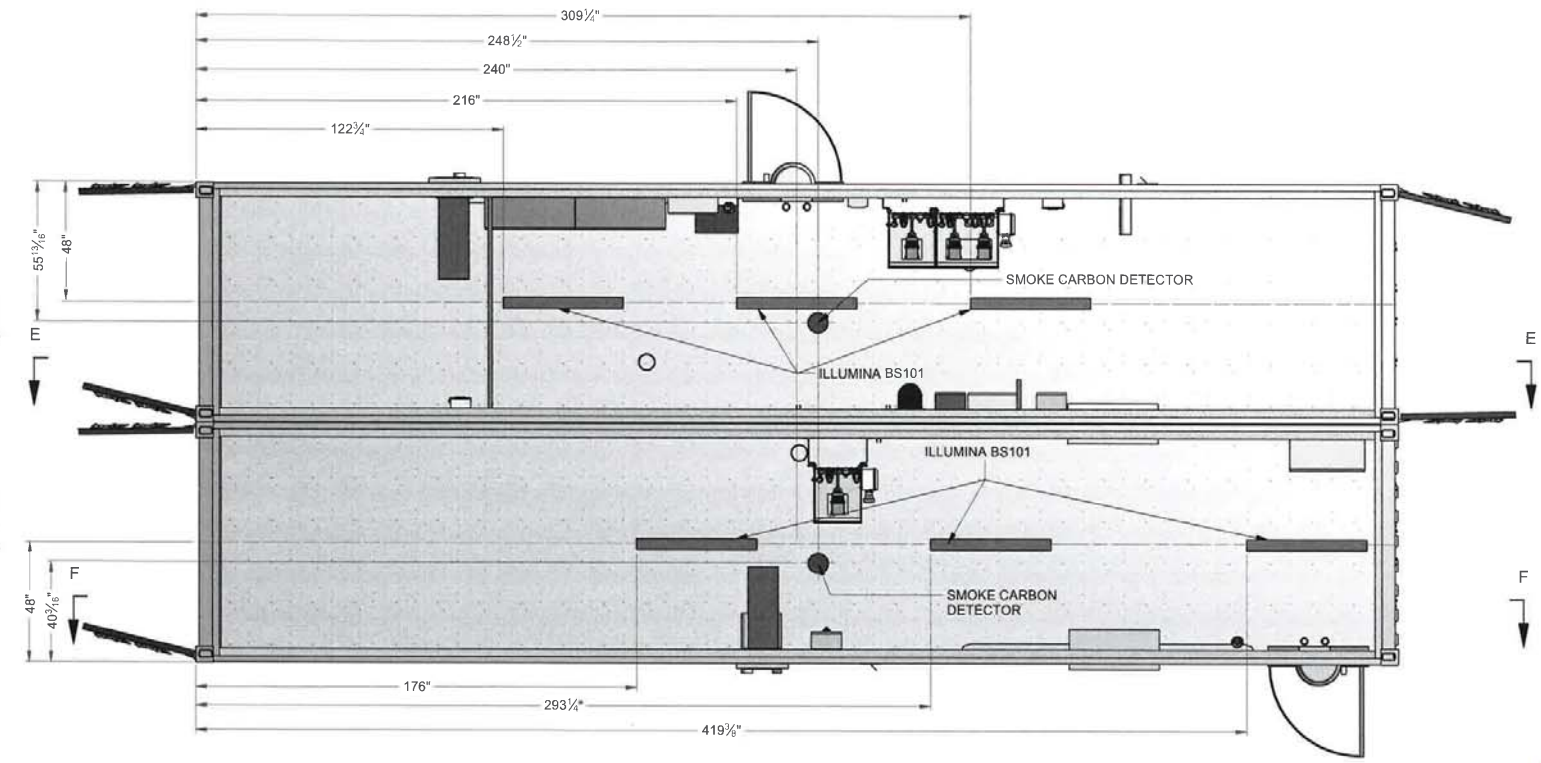

TOP VIEW
ÉLECTRICAL COMPONENTS

AGNICO EAGLE

Vendor Document Status

1 ☐ Proceed to next submission and status.

2 ☐ Proceed with exceptions as noted to next submission and status.

3 ☐ Do not proceed. Revise as noted and resubmit next submission and status.

4 ☐ Complete, no further submission required.

By: Date:

Review and authorization to fabricate are only for general conformance with the design concept of the Project as expressed in the Contract Documents. Sole responsibility for the accuracy and completeness of this document, including but not limited to dimensions and quantities, remains with the Supplier/Contractor. Agnico Eagle does not warrant the accuracy or completeness of any of the information contained herein, nor does Agnico Eagle authorize or approve any construction means, methods, techniques, sequences or any safety precautions or procedures.

Agnico Eagle No. 6515-C-250-010-275-DGM-0015-R: Sub001

DOCUMENT FOR INFORMATION

REGISTERED PROFESSIONAL ENGINEER
R. DESGAGNÉ
LICENSEE
NTNU
26/10/2016

NOTE:
THE INFORMATION, SPECIFICATIONS AND DATA SHOWN ON THIS PRINT ARE FURNISHED BY AND ARE TO REMAIN THE PROPERTY OF H_2O INNOVATION.

THE PURPOSE OF THIS DOCUMENT IS TO FACILITATE THE INSTALLATION, MAINTENANCE AND OPERATION OF THE EQUIPMENT REPRESENTED BY SAID PRINT. NO OTHER USE OF THIS DOCUMENT SHALL BE MADE WITHOUT EXPRESS WRITTEN CONSENT FROM H_2O INNOVATION.

DRAWING REVISION

REV	DATE	REVISION DESCRIPTION	DRAWN	PEER	ENG	APPVD
00	30/06/2016	PRELIMINARY	MC	HC	MB	MB

h2o innovation
knowledge to share du savoir à partager

UNLESS NOTED OTHERWISE
DO NOT SCALE PRINTS

MELIADINE, NU

216 m3/day

TITLE:
WASTE WATER CONTAINER
ELECTRICAL GENERAL ARRANGEMENT

SCALE:	DRAWING NUMBER	REVISION
N.T.S	U65875-B01-0002 SHEET: 1 OF 9	00

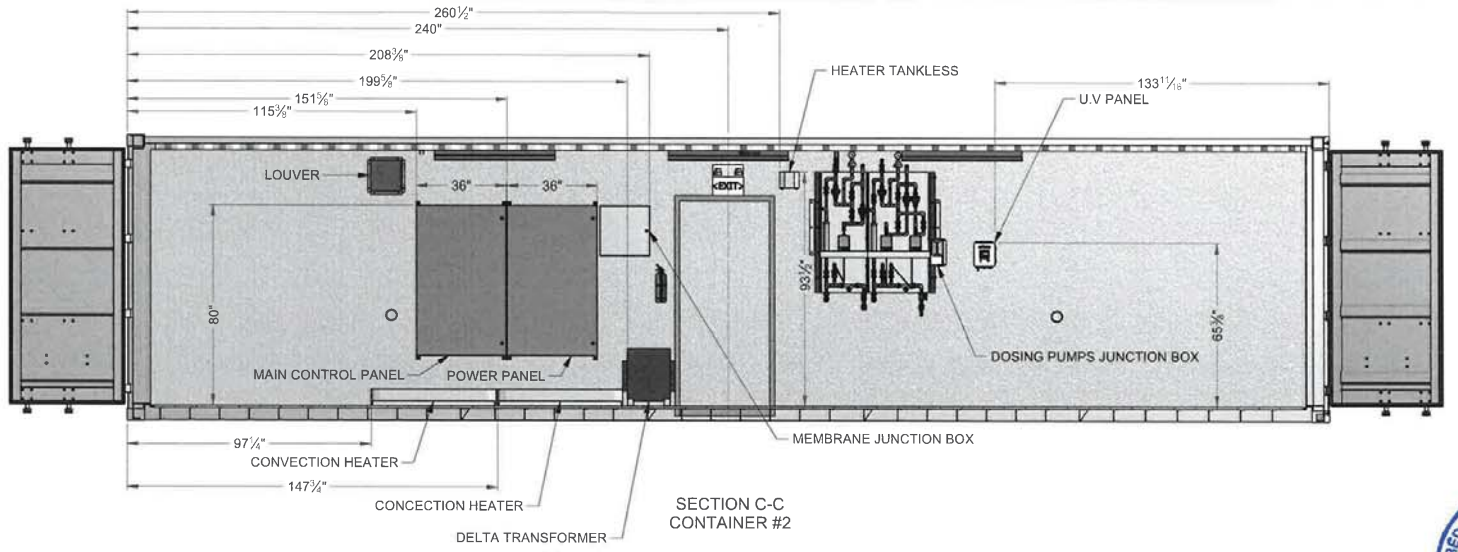

SECTION C-C
CONTAINER #2

REGISTERED PROFESSIONAL ENGINEER
R. DESGAGNÉ
LICENSEE
NT/NU
26/10/2016

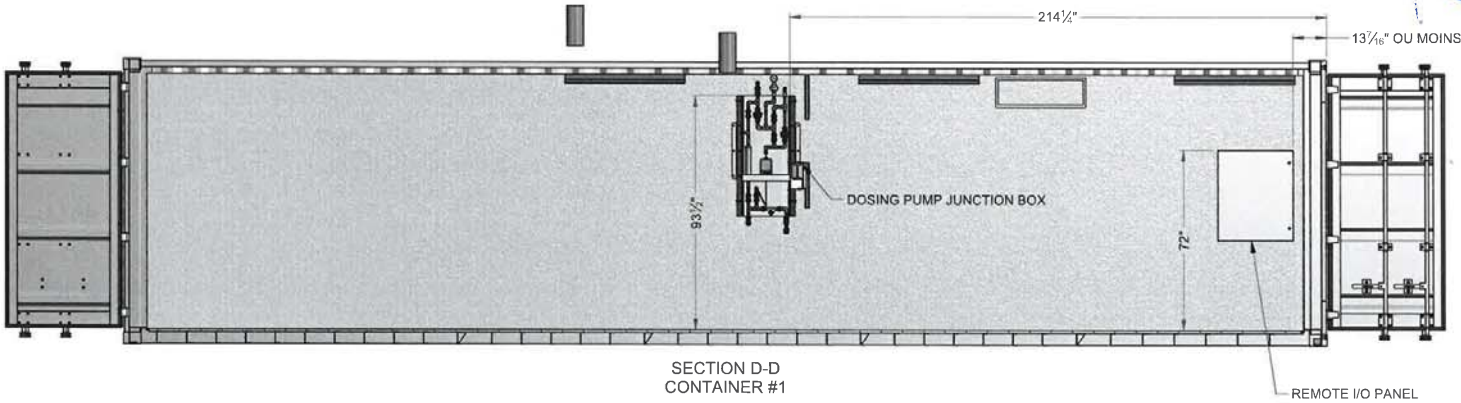

SECTION D-D
CONTAINER #1

NOTE:
THE INFORMATION, SPECIFICATIONS AND DATA SHOWN ON THIS PRINT ARE FURNISHED BY AND ARE TO REMAIN THE PROPERTY OF H_2O INNOVATION

THE PURPOSE OF THIS DOCUMENT IS TO FACILITATE THE INSTALLATION, MAINTENANCE AND OPERATION OF THE EQUIPMENT REPRESENTED BY SAID PRINT. NO OTHER USE OF THIS DOCUMENT SHALL BE MADE WITHOUT EXPRESS WRITTEN CONSENT FROM H_2O INNOVATION.

DRAWING REVISION

REV	DATE	REVISION DESCRIPTION	DRAWN	PEER	ENG	APPVD
00	30/06/2016	PRELIMINARY	MC	HC	MB	MB

UNLESS NOTED OTHERWISE
DO NOT SCALE PRINTS

MELIADINE, NU

216 m3/day

TITLE:
WASTE WATER CONTAINER
ELECTRICAL GENERAL ARRANGEMENT

SCALE:	DRAWING NUMBER:	REVISION:
N.T.S	U65875-B01-0002	00

SHEET: 2 OF 9

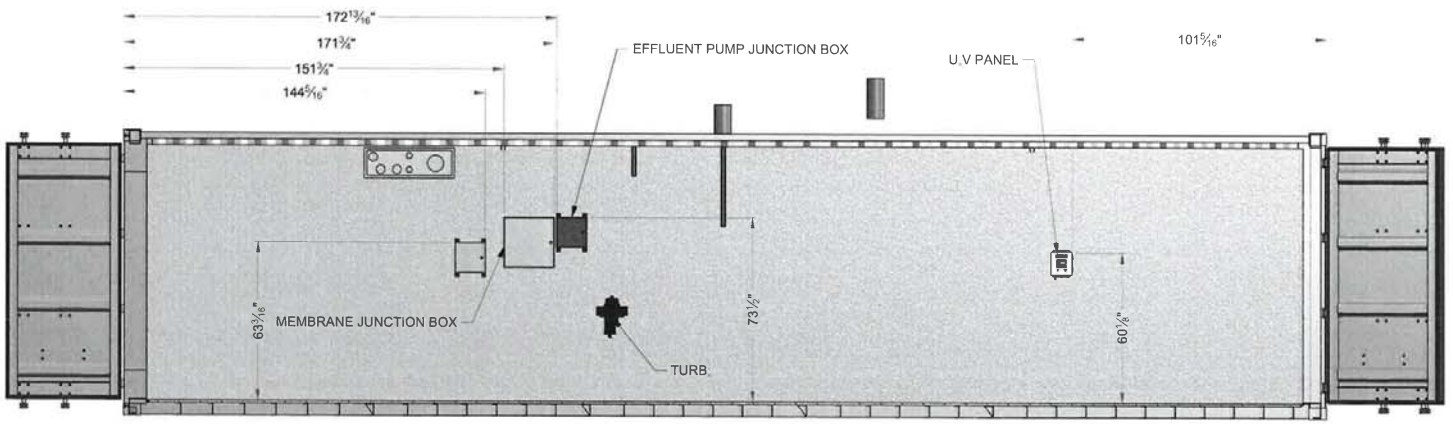

SECTION E-E
CONTAINER #2

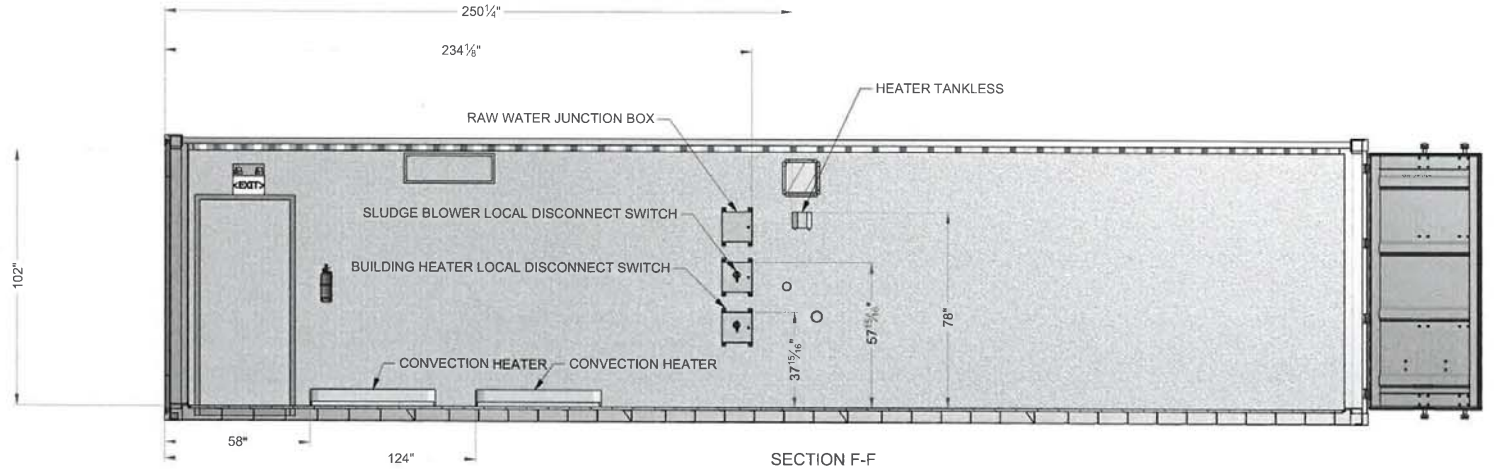

SECTION F-F
CONTAINER #1

REGISTERED PROFESSIONAL ENGINEER
R. DESGAGNÉ
LICENSEE
NT/NU
26/10/2016

NOTE:
THE INFORMATION, SPECIFICATIONS AND DATA SHOWN ON THIS PRINT ARE FURNISHED BY AND ARE TO REMAIN THE PROPERTY OF H_2O INNOVATION.

THE PURPOSE OF THIS DOCUMENT IS TO FACILITATE THE INSTALLATION, MAINTENANCE AND OPERATION OF THE EQUIPMENT REPRESENTED BY SAID PRINT. NO OTHER USE OF THIS DOCUMENT SHALL BE MADE WITHOUT EXPRESS WRITTEN CONSENT FROM H_2O INNOVATION.

DRAWING REVISION

REV	DATE	REVISION DESCRIPTION	DRAWN	PEER	ENG	APPVD
00	30/06/2016	PRELIMINARY	MC	HC	MB	MB

h2o innovation
knowledge to share du savoir à partager

UNLESS NOTED OTHERWISE
DO NOT SCALE PRINTS

MELIADINE, NU

216 m3/day

TITLE:
WASTE WATER CONTAINER
ELECTRICAL GENERAL ARRANGEMENT

SCALE:	DRAWING NUMBER:	REVISION:
N.T.S	U65875-B01-0002	00

SHEET 1 OF 9

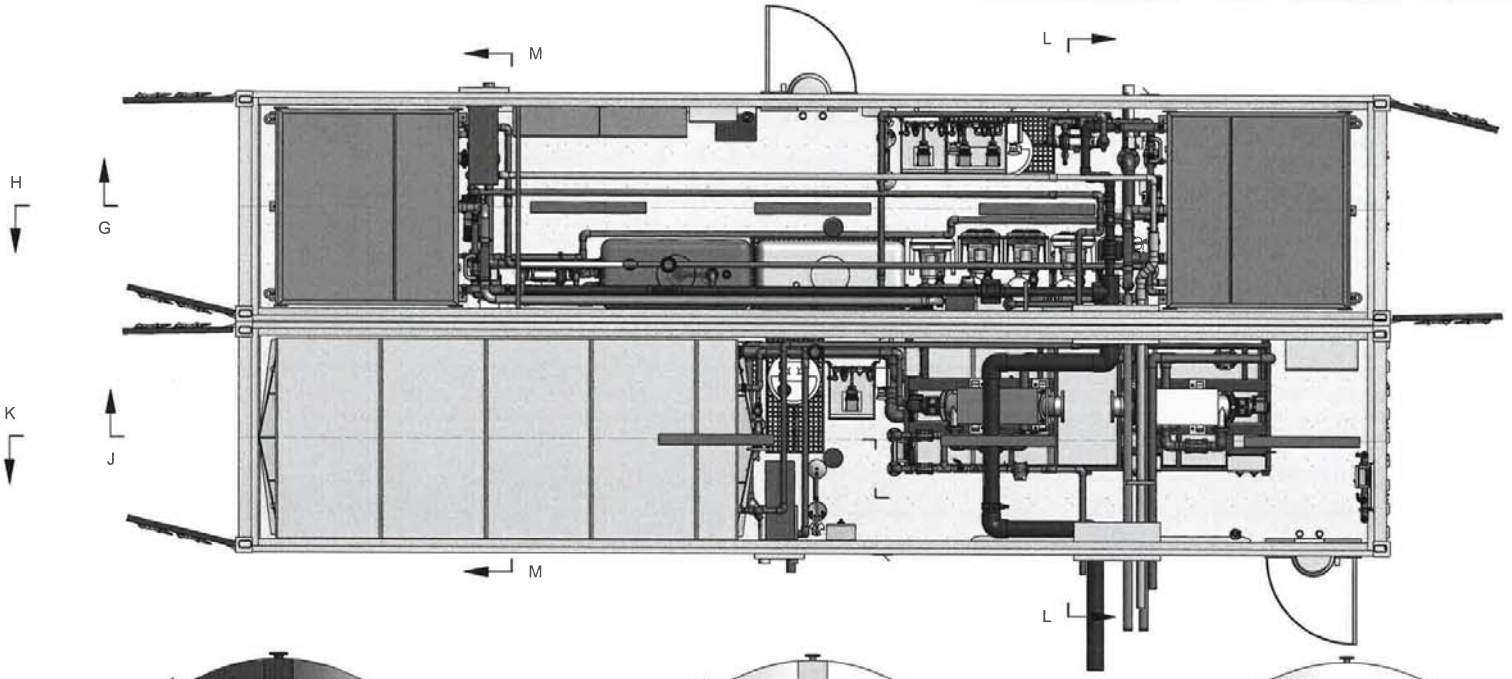

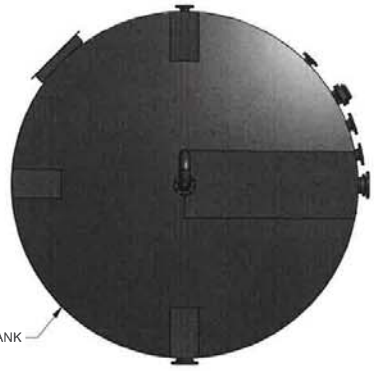
AREOBIC TANK

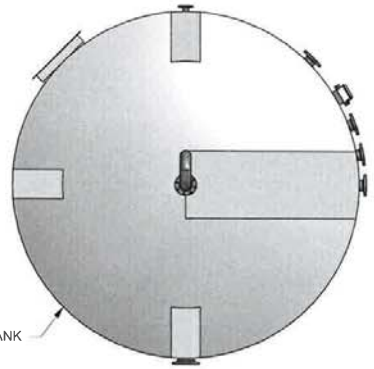
EQUALIZATION TANK

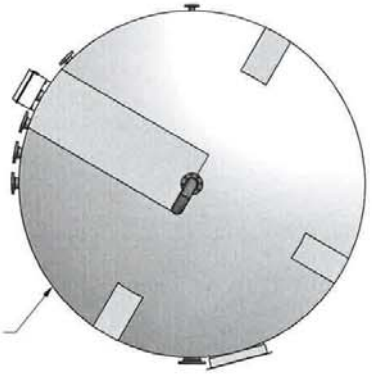
EQUALIZATION TANK

TOP VIEW

REGISTERED PROFESSIONAL ENGINEER
R. DESJAGNÉ
LICENSEE
NT/NU
20/04/2016

NOTE:
THE INFORMATION, SPECIFICATIONS AND DATA SHOWN ON THIS PRINT ARE FURNISHED BY AND ARE TO REMAIN THE PROPERTY OF H_2O INNOVATION.

THE PURPOSE OF THIS DOCUMENT IS TO FACILITATE THE INSTALLATION, MAINTENANCE AND OPERATION OF THE EQUIPMENT REPRESENTED BY SAID PRINT. NO OTHER USE OF THIS DOCUMENT SHALL BE MADE WITHOUT EXPRESS WRITTEN CONSENT FROM H_2O INNOVATION.

DRAWING REVISION

REV	DATE	REVISION DESCRIPTION	DRAWN	PEER	ENG	APPVD
00	30/06/2016	PRELIMINARY	MC	HC	MB	MB

h2o innovation
knowledge to share du savoir à partager

UNLESS NOTED OTHERWISE
DO NOT SCALE PRINTS

MELIADINE, NU

216 m3/day

TITLE:
WASTE WATER CONTAINER
ELECTRICAL GENERAL ARRANGEMENT

SCALE:	DRAWING NUMBER:	REVISION
N.T.S	U65875-B01-0002 SHEET: 1 OF 9	00

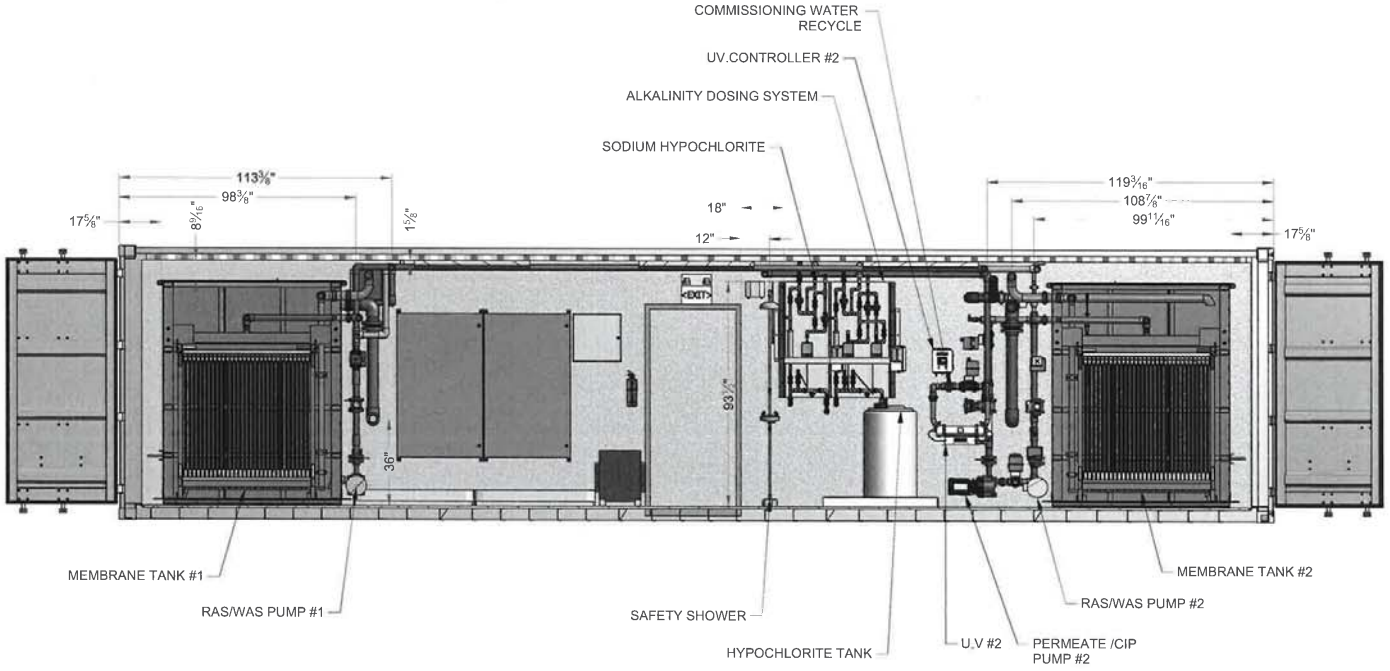

SECTION G-G
CONTAINER #2

REGISTERED PROFESSIONAL ENGINEER
R. DESGAGNÉ
LICENSEE
NT/NU
20/10/2016

NOTE:
THE INFORMATION, SPECIFICATIONS AND DATA SHOWN ON THIS PRINT ARE FURNISHED BY AND ARE TO REMAIN THE PROPERTY OF H_2O INNOVATION.

THE PURPOSE OF THIS DOCUMENT IS TO FACILITATE THE INSTALLATION, MAINTENANCE AND OPERATION OF THE EQUIPMENT REPRESENTED BY SAID PRINT. NO OTHER USE OF THIS DOCUMENT SHALL BE MADE WITHOUT EXPRESS WRITTEN CONSENT FROM H_2O INNOVATION.

DRAWING REVISION

REV	DATE	REVISION DESCRIPTION	DRAWN	PEER	ENG	APPVD
00	30/06/2016	PRELIMINARY	MC	HC	MB	MB

h2o innovation
knowledge to share, du savoir à partager

UNLESS NOTED OTHERWISE
DO NOT SCALE PRINTS

MELIADINE, NU

216 m3/day

TITLE:
WASTE WATER CONTAINER
ELECTRICAL GENERAL ARRANGEMENT

SCALE:	DRAWING NUMBER:	REVISION
N.T.S	U65875-B01-0002	00

SHEET: 5 OF 5

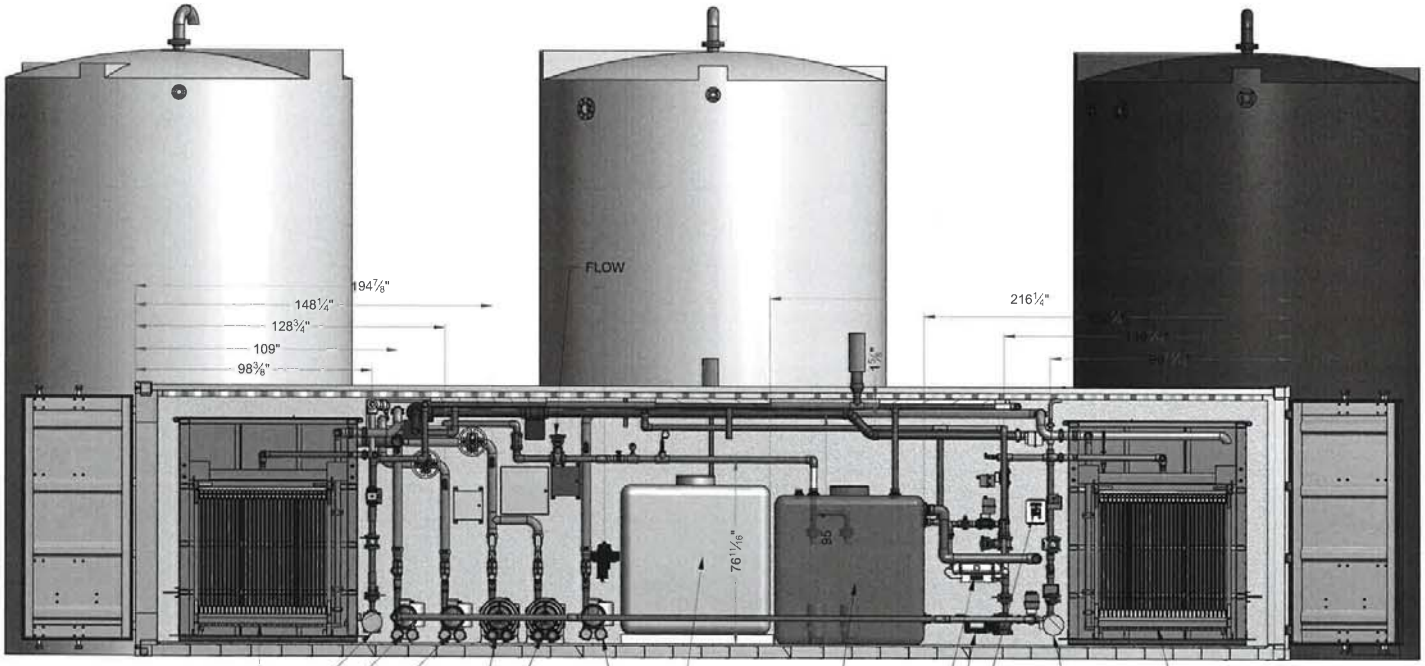

REGISTERED PROFESSIONAL ENGINEER
R. DESGAGNÉ
LICENSEE
NT/NU
20/10/2016

SECTION H-H
CONTAINER #2

NOTE:
THE INFORMATION, SPECIFICATIONS AND DATA SHOWN ON THIS PRINT ARE FURNISHED BY AND ARE TO REMAIN THE PROPERTY OF H_2O INNOVATION.

THE PURPOSE OF THIS DOCUMENT IS TO FACILITATE THE INSTALLATION, MAINTENANCE AND OPERATION OF THE EQUIPMENT REPRESENTED BY SAID PRINT. NO OTHER USE OF THIS DOCUMENT SHALL BE MADE WITHOUT EXPRESS WRITTEN CONSENT FROM H_2O INNOVATION.

DRAWING REVISION

REV	DATE	REVISION DESCRIPTION	DRAWN	PEER	ENG	APPVD
00	30/06/2016	PRELIMINARY	MC	HC	MB	MB

h2o innovation
knowledge to share, du savoir à partager

UNLESS NOTED OTHERWISE
DO NOT SCALE PRINTS

MELIADINE, NU

216 m3/day

TITLE:
WASTE WATER CONTAINER
ELECTRICAL GENERAL ARRANGEMENT

SCALE:	DRAWING NUMBER:	REVISION
	U65875-B01-0002	00

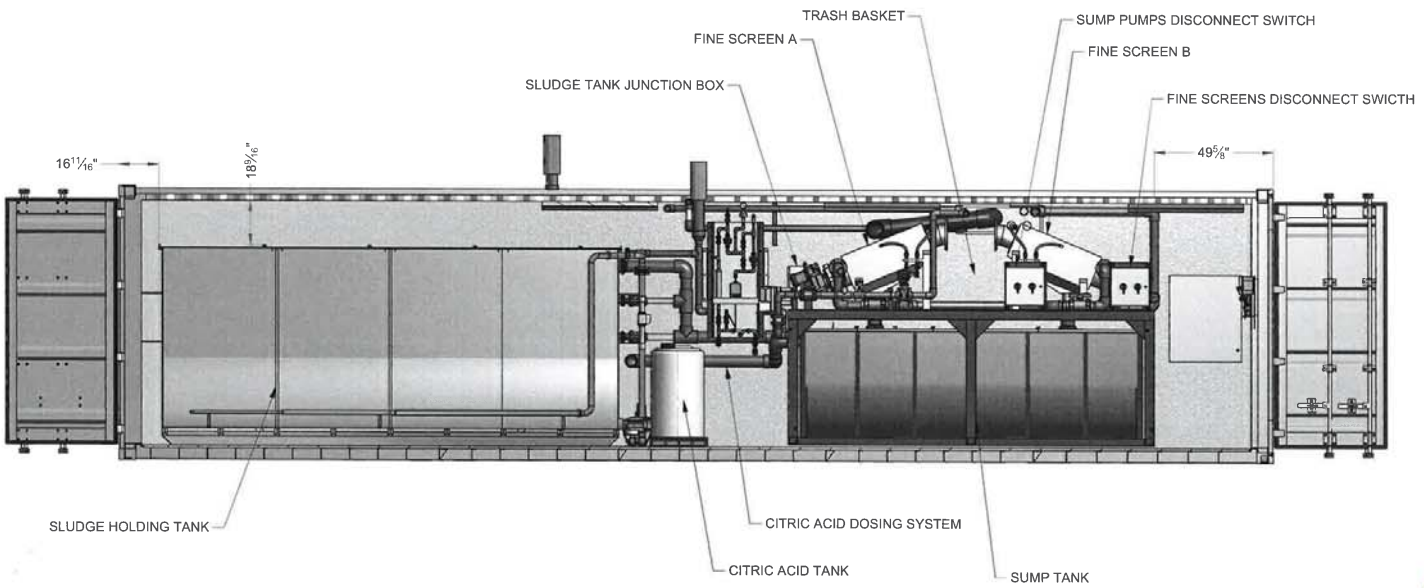

REGISTERED PROFESSIONAL ENGINEER
R. DESGAGNÉ
LICENSEE
NT/NU
26/10/2016

SECTION J-J
CONTAINER #1

NOTE:
THE INFORMATION, SPECIFICATIONS AND DATA SHOWN ON THIS PRINT ARE FURNISHED BY AND ARE TO REMAIN THE PROPERTY OF H_2O INNOVATION

THE PURPOSE OF THIS DOCUMENT IS TO FACILITATE THE INSTALLATION, MAINTENANCE AND OPERATION OF THE EQUIPMENT REPRESENTED BY SAID PRINT. NO OTHER USE OF THIS DOCUMENT SHALL BE MADE WITHOUT EXPRESS WRITTEN CONSENT FROM H_2O INNOVATION.

DRAWING REVISION

REV	DATE	REVISION DESCRIPTION	DRAWN	PEER	ENG	APPVD
00	30/06/2016	PRELIMINARY	MC	HC	MB	MB

h2o innovation
knowledge to share du savoir à partager

UNLESS NOTED OTHERWISE
DO NOT SCALE PRINTS

MELIADINE, NU

216 m3/day

TITLE:
WASTE WATER CONTAINER
ELECTRICAL GENERAL ARRANGEMENT

SCALE:	DRAWING NUMBER:	REVISION
N.T.S	U65875-B01-0002	00

SHEET: 7 OF 9

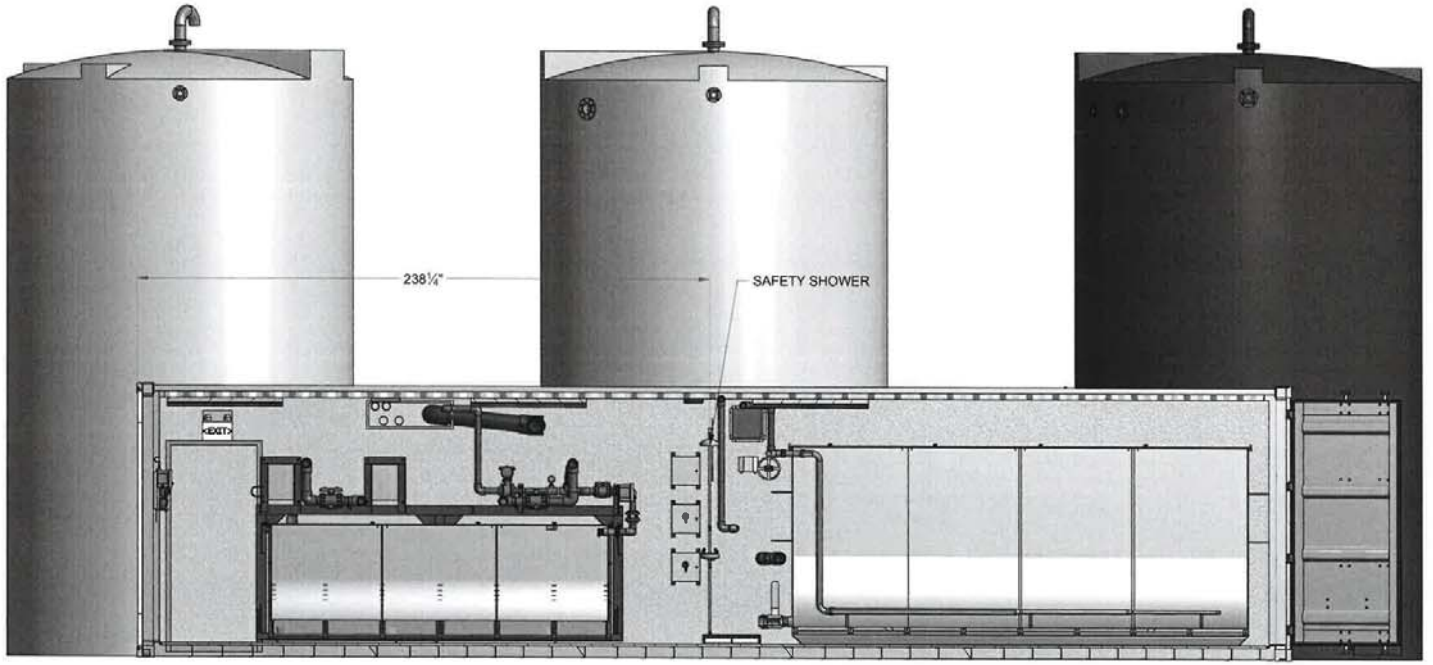

REGISTERED PROFESSIONAL ENGINEER
R. DESJAGNÉ
LICENSEE
NT/NU
26/10/2016

SECTION K-K
CONTAINER #1

NOTE:
THE INFORMATION, SPECIFICATIONS AND DATA SHOWN ON THIS PRINT ARE FURNISHED BY AND ARE TO REMAIN THE PROPERTY OF H_2O INNOVATION.

THE PURPOSE OF THIS DOCUMENT IS TO FACILITATE THE INSTALLATION, MAINTENANCE AND OPERATION OF THE EQUIPMENT REPRESENTED BY SAID PRINT. NO OTHER USE OF THIS DOCUMENT SHALL BE MADE WITHOUT EXPRESS WRITTEN CONSENT FROM H_2O INNOVATION.

DRAWING REVISION

REV	DATE	REVISION DESCRIPTION	DRAWN	PEER	ENG	APPVD
00	30/06/2016	PRELIMINARY	MC	HC	MB	MB

h2o innovation
knowledge to share du savoir à partager

UNLESS NOTED OTHERWISE
INTERPRETATION, ANSI Y14.5
TOLERANCES
DO NOT SCALE PRINTS

MELIADINE, NU

216 m3/day

TITLE:
WASTE WATER CONTAINER
ELECTRICAL GENERAL ARRANGEMENT

SCALE:	DRAWING NUMBER:	REVISION
N.T.S	U65875-B01-0002 SHEET # OF 9	00

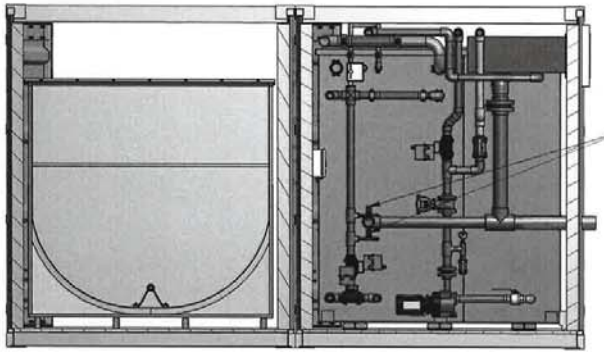

SECTION M-M

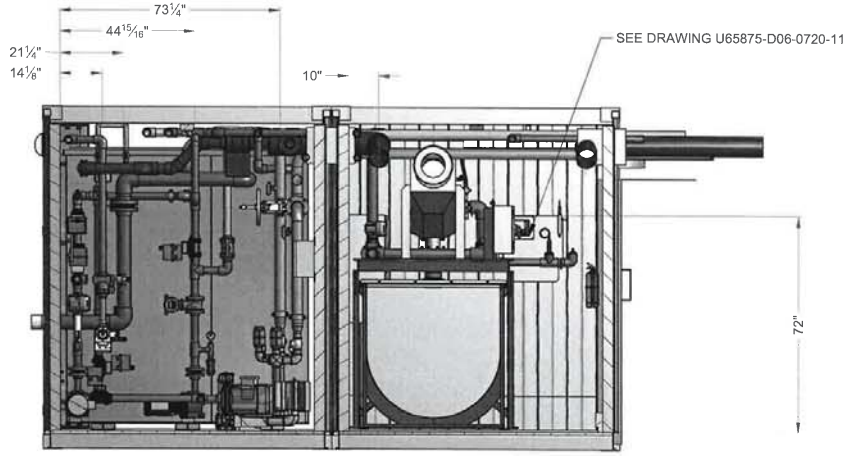

SECTION L-L

REGISTERED PROFESSIONAL ENGINEER
R. DESGAGNÉ
LICENSEE
NT/NU
20/10/2016

NOTE:
THE INFORMATION, SPECIFICATIONS AND DATA SHOWN ON THIS PRINT ARE FURNISHED BY AND ARE TO REMAIN THE PROPERTY OF H_2O INNOVATION.

THE PURPOSE OF THIS DOCUMENT IS TO FACILITATE THE INSTALLATION, MAINTENANCE AND OPERATION OF THE EQUIPMENT REPRESENTED BY SAID PRINT. NO OTHER USE OF THIS DOCUMENT SHALL BE MADE WITHOUT EXPRESS WRITTEN CONSENT FROM H_2O INNOVATION.

DRAWING REVISION

REV	DATE	REVISION DESCRIPTION	DRAWN	PEER	ENG	APPVD
00	30/06/2016	PRELIMINARY	MC	HC	MB	MB

h2o innovation
knowledge to share, du savoir à partager

UNLESS NOTED OTHERWISE
DO NOT SCALE PRINTS

MELIADINE, NU

216 m3/day

TITLE:
WASTE WATER CONTAINER
ELECTRICAL GENERAL ARRANGEMENT

SCALE:	DRAWING NUMBER:	REVISION
N.T.S	U65875-B01-0002 SHEET 1 OF 9	00

VALVE SYMBOLS

N.OPEN N.CLOSED

- BALL
- V-BALL
- BUTTERFLY
- DIAPHRAGM
- GATE
- GLOBE
- NEEDLE
- PLUG
- SAMPLE/DRAIN
- CHECK
- BACKFLOW PREVENTER
- INJECTION QUILL
- 3-WAY, 4-WAY
- PRESSURE REGULATING
- BACK PRESSURE REGULATING
- FLOW CONTROL
- 2-WAY SOLENOID
- 3-WAY SOLENOID
- 4-WAY SOLENOID
- AIR RELEASE
- VACUUM BREAKER
- PRESSURE RELEASE
- SLUICE GATE/WEIR

VALVE ACTUATOR SYMBOLS

- PNEUMATIC (FAIL LAST POSITION)
- F.C. PNEUMATIC FAIL CLOSE
- F.O. PNEUMATIC FAIL OPEN
- ELECTRIC
- DIAPHRAGM
- POSITIONER (ANY ACTUATOR TYPE)
- HAND OVERRIDE (ANY ACTUATOR TYPE)
- TRAVEL STOPS (ANY ACTUATOR TYPE)

FLOWMETER SYMBOLS

- ROTAMETER
- ROTAMETER W/ INTEGRAL NEEDLE VALVE
- THERMAL

INTEGRAL REMOTE

- MAGNETIC
- PADDLE
- VORTEX
- DP/ORIFICE

INSTRUMENTATION SYMBOLS

LOCALLY MOUNTED	IN CONTROL PANEL	DESCRIPTION
X	X	DISCRETE INSTRUMENT
	X	PRIMARY PLC OR DCS SHARED CONTROL
	X	SECONDARY PLC OR DCS SHARED CONTROL
	X	COMPUTER FUNCTION

INSTRUMENT FUNCTIONS

- K SIGNAL PROCESSING FUNCTION
- A/M AUTO/MANUAL
- Σ ADDITION/SUMMATION
- Δ DIFFERENTIAL
- INTERLOCK LOGIC FUNCTION
- AVERAGING

INSTRUMENT CONNECTIONS

THREADED SOCKETWELD WELDED

PIPING CONNECTIONS & SYMBOLS

- FLANGE
- QUICK DISCONNECT HOSE/TUBE
- THREADED CONNECTION
- EXPANSION/FLEXIBLE/ ISOLATION JOINT
- UNION
- GROOVED COUPLING
- BLIND FLANGE
- DOUBLE CONTAINMENT
- CAPPED END
- REDUCER
- INSULATION THICKNESS
- INSULATION
- ECCENTRIC REDUCER
- INSULATION THICKNESS
- HEAT TRACING E=ELECTRIC S=STEAM G=GLYCOL
- DRAIN OUTLET

PIPING ABBREVIATIONS

316 SS	316 STAINLESS STEEL
304 SS	304 STAINLESS STEEL
316L SS	LOW CARBON 316 STAINLESS STEEL
304L SS	LOW CARBON 304 STAINLESS STEEL
CPVC	CHLORINATED POLYVINYL CHLORIDE
CS	CARBON STEEL
DI	DUCTILE IRON
HDPE	HIGH-DENSITY POLYETHYLENE
PE	POLYETHYLENE
PVC	POLYVINYL CHLORIDE
RLCS	RUBBER LINED CARBON STEEL
SCH	SCHEDULE
SDR	STANDARD DIMENSION RATIO

LINE SYMBOLOGY

- MAIN PROCESS LINE
- SECONDARY PROCESS LINE
- PROCESS LINE, BY OTHERS
- COMM LINK (EX. PLC TO HMI)
- COMM LINK (EX. PLC TO DCS)
- ELECTRIC WIRING
- PNEUMATIC LINE
- LINE JUMPER
- PIPE DISCONTINUATION
- FLOW DIRECTION ARROWS
- 4" 316 SS SCH.10 LINES SIZE/ MATERIAL IDENTIFIER
- SKID BOUNDARY
- NOT BY H_2O Innovation
- SKID BY H_2O Innovation
- REVISION
- LINES TO/FROM OTHER SHEETS DESCRIPTION C01-0001 SHT 1 DESTINATION

PUMP SYMBOLS

- CENTRIFUGAL
- CHEMICAL METERING
- DIAPHRAGM
- POSITIVE DISPLACEMENT
- VACUUM
- SUBMERSIBLE OR FLOATING
- VERTICAL TURBINE
- PERISTALTIC/HOSE

MISCELLANEOUS EQUIPMENT SYMBOLS

- CARTRIDGE FILTER HOUSING
- AUTOMATIC STRAINER
- SILENCER
- MOTORIZED MIXER
- STATIC MIXER
- RESIN TRAP
- MOTOR
- EDUCTOR OR VENTURI
- Y STRAINER
- CONICAL OR TEMPORARY STRAINER
- PULSATION DAMPENER
- DIAPHRAGM
- FLOW ORIFICE
- RUPTURE DISK (PRESSURE)
- RUPTURE DISK (VACUUM)
- SPECTACLE BLIND (NORMALLY OPEN, NORMALLY CLOSED)
- COARSE BUBBLE DIFFUSER
- FINE BUBBLE DIFFUSER
- FILTER
- TURBOCHARGER
- MANWAY
- TANK
- IMMERSED HEATER
- IN-LINE HEATER
- ULTRASONIC LEVEL TRANSMITTER
- FLOAT-STYLE LEVEL SWITCH
- CHEMICAL CONTAINMENT
- CALIBRATION COLUMN
- MEMBRANE
- UV STERILIZER
- AIR COMPRESSOR
- POSITIVE DISPLACEMENT BLOWER
- REGENERATIVE BLOWER
- CENTRIFUGAL BLOWER
- REFRIGERATED AIR DRYER
- FLOW CHAMBER
- BIO-WHEEL

FLOW INSTRUMENTS

FAH	FLOW ALARM HIGH
FAL	FLOW ALARM LOW
FCV	FLOW CONTROL VALVE
FE	FLOW ELEMENT
FI	FLOW INDICATOR
FIC	FLOW INDICATING CONTROLLER
FIT	FLOW INDICATING TRANSMITTER
FR	FLOW RECORDING
FSH	FLOW SWITCH HIGH
FSL	FLOW SWITCH LOW
FV	FLOW CONTROL OR ON/OFF VALVE
FQ	FLOW TOTALIZER
FY	FLOW SIGNAL CONVERT, I/P, OR SOLN

PRESSURE INSTRUMENTS

PAH	PRESSURE ALARM HIGH
PAL	PRESSURE ALARM LOW
PC	PRESSURE CONTROLLER
PCV	SELF REG PRESS CONTROL VALVE
PDH	DIFFERENTIAL PRESSURE HIGH
PDI	DIFFERENTIAL PRESSURE INDICATOR
PDIT	DIFF PRESS INDICATING TRANSMITTER
PDSH	DIFFERENTIAL PRESS SWITCH HIGH
PG	PRESSURE GAUGE
PI	PRESSURE INDICATOR
PIC	PRESSURE INDICATING CONTROLLER
PIT	PRESSURE INDICATING TRANSMITTER
PSH	PRESSURE SWITCH HIGH
PSL	PRESSURE SWITCH LOW
PSV	SELF REG PRESS SAFETY VALVE
PT	PRESSURE TRANSMITTER
PY	PRESS SIGNAL CONVERT, I/P, OR SOLN
PSLH	PRESSURE SWITCH LOW HIGH

LEVEL INSTRUMENTS

LAH	LEVEL ALARM HIGH
LAL	LEVEL ALARM LOW
LCV	SELF REG LEVEL CONTROL VALVE
LE	LEVEL ELEMENT
LG	LEVEL GAUGE
LI	LEVEL INDICATOR
LIC	LEVEL INDICATING CONTROLLER
LIT	LEVEL INDICATING TRANSMITTER
LSH	LEVEL SWITCH HIGH
LSL	LEVEL SWITCH LOW
LT	LEVEL TRANSMITTER
LV	LEVEL CONTROL OR ON/OFF VALVE
LY	LEVEL SIGNAL CONVERT, I/P, OR SOLN

TEMPERATURE INSTRUMENTS

TAH	TEMPERATURE ALARM HIGH
TAL	TEMPERATURE ALARM LOW
TC	TEMPERATURE CONTROLLER
TE	TEMPERATURE ELEMENT
TG	TEMPERATURE GAUGE
TI	TEMPERATURE INDICATOR
TIC	TEMP INDICATING CONTROLLER
TIT	TEMP INDICATING TRANSMITTER
TSH	TEMPERATURE SWITCH HIGH
TSL	TEMPERATURE SWITCH LOW
TT	TEMPERATURE TRANSMITTER
TV	TEMP CONTROL OR ON/OFF VALVE
TY	TEMP SIGNAL CONVERT, I/P, OR SOLN

ELECTRICAL ABBREVIATIONS

JB	JUNCTION BOX
MCP	MAIN CONTROL PANEL
RIO	REMOTE I/O PANEL
PP	POWER PANEL
VFD	VARIABLE FREQUENCY DRIVE
HOA	HAND-OFF-AUTO

ANALYTICAL INSTRUMENTS

AAH	ANALYTICAL ALARM HIGH
AAL	ANALYTICAL ALARM LOW
AE	ANALYTICAL ELEMENT
AI	ANALYTICAL INDICATOR
AIC	ANAL INDICATING CONTROLLER
AIT	ANAL INDICATING TRANSMITTER
ASH	ANALYTICAL SWITCH HIGH
ASL	ANALYTICAL SWITCH LOW
AT	ANALYTICAL TRANSMITTER
AY	ANALYTICAL SIGNAL CONVERT, I/P, OR SOL

MISCELLANEOUS INSTRUMENTS

HS	HAND SWITCH
HI	HAND SWITCH POSITION INDICATOR
II	CURRENT INDICATOR
QQI	TOTALIZER INDICATOR
SC	SPEED CONTROLLER
SI	SPEED INDICATOR
YA	MOTOR ALARM
YC	MOTOR CONTROL
YI	MOTOR ON/OFF INDICATOR
ZI	POSITION INDICATOR
ZIC	SWITCH CLOSE INDICATOR
ZIO	SWITCH OPEN INDICATOR
ZSC	POSITION SWITCH CLOSED
ZSO	POSITION SWITCH OPEN
ZT	POSITION TRANSMITTER
ZY	POSITIONER

VALVES & EQUIPMENT

AC	AIR COMPRESSOR
ARV	AIR RELEASE VALVE
AS	AIR SUPPLY
B	BLOWER
BT	BULK TOTE
CBD	COARSE BUBBLE DIFFUSER
CV	CHECK VALVE
ED	EDUCTOR
F	FILTER
FBD	FINE BUBBLE DIFFUSER
FL	FAIL LAST (DEFAULT IF NOT SHOWN)
FC	FAIL CLOSED
FO	FAIL OPEN
FQG	CALIBRATION COLUMN
H	HEATER
HCV	HAND CONTROL VALVE
HTR	HEATER
HV	HAND VALVE
MX	MIXER
P	PUMP
RT	RESIN TRAP
T	TANK
UV	ULTRAVIOLET
V	HAND VALVE
MTN	MULTI-TURN ACTUATION VALVE

OTHER ABBREVIATIONS

C	CAPACITANCE
CIP	CLEAN-IN-PLACE
COND	CONDUCTIVITY
DO_2	DISSOLVED OXYGEN
ESP	EMERGENCY STOP
IA	INSTRUMENT AIR
I/P	CURRENT TO PNEUMATIC CONVERTER
ORP	OXIDATION REDUCTION POTENTIAL
pH	HYDROGEN ION
RES	RESISTIVITY
RTD	RESISTANCE TEMP DETECTOR
SOL	SOLENOID
SP	SET POINT
uS	MICROSIEMENS

Vendor Document Status

1 ☐ Process and mechanical submission and acceptance.
2 ☐ Process and mechanical completion and mechanical submission and acceptance.
3 ☐ Complete with comments
4 ☐ Complete - no further submission required.

No. 6915-C-250-010-205-PID-0002 Sub002

DOCUMENT FOR INFORMATION

NOTE:
THE INFORMATION, SPECIFICATIONS AND DATA SHOWN ON THIS PRINT ARE FURNISHED BY AND ARE TO REMAIN THE PROPERTY OF H_2O INNOVATION.

THE PURPOSE OF THIS DOCUMENT IS TO FACILITATE THE INSTALLATION, MAINTENANCE AND OPERATION OF THE EQUIPMENT REPRESENTED BY SAID PRINT. NO OTHER USE OF THIS DOCUMENT SHALL BE MADE WITHOUT EXPRESS WRITTEN CONSENT FROM H_2O INNOVATION.

DRAWING REVISION

REV	DATE	REVISION DESCRIPTION	DRAWN	CHKD	ENG	APPVD
03	09/08/2016	AS BUILT	M.P.	S.B.	R.D.	A.M.
02	25/07/2016	REVISED AS PER COMMENTS	M.P.	S.B.	R.D.	A.M.
01	29/06/2016	AS PER COMMENTS	M.P.	S.B.	R.D.	A.M.
00	13/06/2016	INITIAL RELEASE	M.P.	S.B.	R.D.	A.M.

h2o innovation — knowledge to share,du savoir à partager

UNLESS NOTED OTHERWISE
INTERPRETATION AND 1143
TOLERANCED FRACTIONS ±1/16 DECIMALS X.X ±0.030 X.XX ±0.015 ANGLES ±0.5° HOLE SIZES ±.005 HOLE DEPTHS ±.1
DO NOT SCALE PRINTS

MELIADINE

WTP CONTAINERIZED UNIT

TITLE: PROCESS AND INSTRUMENTION DIAGRAMS LEGEND

SCALE: N/A

DRAWING NUMBER: P65873-C01-0001

REVISION: 03

SHEET: 1 of 1

VALVE SYMBOLS

N.OPEN N.CLOSED

- BALL
- V-BALL
- BUTTERFLY
- DIAPHRAGM
- GATE
- GLOBE
- NEEDLE
- PLUG
- SAMPLE/DRAIN
- CHECK
- BACKFLOW PREVENTER
- 3-WAY, 4-WAY
- PRESSURE REGULATING
- BACK PRESSURE REGULATING
- FLOW CONTROL
- 2-WAY SOLENOID
- 3-WAY SOLENOID
- 4-WAY SOLENOID
- AIR RELEASE
- VACUUM BREAKER
- PRESSURE RELEASE
- SLUICE GATE/WEIR

VALVE ACTUATOR SYMBOLS

- PNEUMATIC (FAIL LAST POSITION)
- PNEUMATIC FAIL CLOSE
- PNEUMATIC FAIL OPEN
- ELECTRIC
- DIAPHRAGM
- POSITIONER (ANY ACTUATOR TYPE)
- HAND OVERRIDE (ANY ACTUATOR TYPE)
- TRAVEL STOPS (ANY ACTUATOR TYPE)

FLOWMETER SYMBOLS

INTEGRAL, CLOSE COUPLED, REMOTE

- MAGNETIC
- PADDLE
- VORTEX
- DP/ORIFICE
- THERMAL
- ROTAMETER

INSTRUMENTATION SYMBOLS

LOCALLY MOUNTED	IN CONTROL PANEL	DESCRIPTION
X	X	DISCRETE INSTRUMENT
	X	PRIMARY PLC OR DCS SHARED CONTROL
	X	SECONDARY PLC OR DCS SHARED CONTROL
	X	COMPUTER FUNCTION

INSTRUMENT FUNCTIONS

- K — SIGNAL PROCESSING FUNCTION
- A/M — AUTO/MANUAL
- Σ — ADDITION/SUMMATION
- Δ — DIFFERENTIAL
- INTERLOCK LOGIC FUNCTION
- AVERAGING

INSTRUMENT CONNECTIONS

- SOCKETWELD
- THREADED
- WELDED

PIPING SYMBOLS

- FLANGED CONNECTION
- THREADED CONNECTION
- BLIND FLANGE
- DOUBLE CONTAINMENT
- QUICK DISCONNECT VICTAULIC
- x" INSULATION THICKNESS INSULATION
- QUICK DISCONNECT CAMLOK
- x" INSULATION THICKNESS HEAT TRACING E=ELECTRIC S=STEAM G-GLYCOL
- CAPPED PIPE END
- DRAIN OUTLET
- UNION
- EXPANSION/FLEXIBLE/ ISOLATION JOINT
- REDUCER ECCENTRIC REDUCER

PIPING ABBREVIATIONS

316 SS	316 STAINLESS STEEL
304 SS	304 STAINLESS STEEL
316L SS	LOW CARBON 316 STAINLESS STEEL
304L SS	LOW CARBON 304 STAINLESS STEEL
CPVC	CHLORINATED POLYVINYL CHLORIDE
CS	CARBON STEEL
DI	DUCTILE IRON
HDPE	HIGH-DENSITY POLYETHYLENE
PE	POLYETHYLENE
PVC	POLYVINYL CHLORIDE
RLCS	RUBBER LINED CARBON STEEL
SCH.	SCHEDULE
SDR	STANDARD DIMENSION RATIO
CML	CEMENT MORTAR LINED

LINE SYMBOLOGY

- MAIN PROCESS LINE
- SECONDARY PROCESS LINE
- PROCESS LINE, BY OTHERS
- COMM LINK (EX. PLC TO HMI)
- COMM LINK (EX. PLC TO DCS)
- ELECTRIC WIRING
- PNEUMATIC LINE
- LINE JUMPER
- PIPE DISCONTINUATION
- FLOW DIRECTION ARROWS
- 4" 316 SS SCH.10 — LINES SIZE/ MATERIAL IDENTIFIER
- SKID BOUNDARY — SKID BY H_2O Innovation
- BY OTHERS
- REVISION
- LINES TO/FROM OTHER SHEETS
- DESCRIPTION
- C01-0001 SHT 1
- DESTINATION

PUMP SYMBOLS

- CENTRIFUGAL
- CHEMICAL METERING
- DIAPHRAGM
- POSITIVE DISPLACEMENT
- VACUUM
- SUBMERSIBLE OR FLOATING
- VERTICAL TURBINE
- PERISTALTIC/HOSE

MISCELLANEOUS EQUIPMENT SYMBOLS

- CARTRIDGE FILTER HOUSING
- AUTOMATIC STRAINER
- SILENCER
- MIXER
- STATIC MIXER
- RESIN TRAP
- MOTOR
- EDUCTOR OR VENTURI
- Y STRAINER
- CONICAL OR TEMPORARY STRAINER
- PULSATION DAMPENER
- DIAPHRAGM
- FLOW ORIFICE
- AIR COMPRESSOR
- RUPTURE DISK (PRESSURE)
- RUPTURE DISK (VACUUM)
- SPECTACLE BLIND (NORMALLY OPEN, NORMALLY CLOSED)
- INJECTION QUILL
- FILTER
- REFRIGERATED AIR DRYER
- TANK
- MMF TANK
- MMF TANK
- IMMERSED HEATER
- IN-LINE HEATER
- ULTRASONIC LEVEL TRANSMITTER
- FLOAT-STYLE LEVEL TRANSMITTER
- CHEMICAL CONTAINMENT
- CALIBRATION COLUMN
- MEMBRANE
- UV STERILIZER
- DIFFUSERS:
- COARSE BUBBLE
- FINE BUBBLE
- POSITIVE DISPLACEMENT BLOWER
- REGENERATIVE BLOWER
- CENTRIFUGAL BLOWER
- TURBOCHARGER
- BIO-WHEEL
- MANWAY

FLOW INSTRUMENTS

FAH	FLOW ALARM HIGH
FAL	FLOW ALARM LOW
FCV	FLOW CONTROL VALVE
FE	FLOW ELEMENT
FI	FLOW INDICATOR
FIC	FLOW INDICATING CONTROLLER
FIT	FLOW INDICATING TRANSMITTER
FR	FLOW RECORDING
FSH	FLOW SWITCH HIGH
FSL	FLOW SWITCH LOW
FV	FLOW CONTROL OR ON/OFF VALVE
FQ	FLOW TOTALIZER
FX	ELEMENT CONTROLLED BY FLOW
FY	FLOW SIGNAL CONVERT, I/P, OR SOLN

PRESSURE INSTRUMENTS

PAH	PRESSURE ALARM HIGH
PAL	PRESSURE ALARM LOW
PC	PRESSURE CONTROLLER
PCV	SELF REG PRESS CONTROL VALVE
PDH	DIFFERENTIAL PRESSURE HIGH
PDI	DIFFERENTIAL PRESSURE INDICATOR
PDIT	DIFF PRESS INDICATING TRANSMITTER
PDSH	DIFFERENTIAL PRESS SWITCH HIGH
PG	PRESSURE GAUGE
PI	PRESSURE INDICATOR
PIC	PRESSURE INDICATING CONTROLLER
PIT	PRESSURE INDICATING TRANSMITTER
PSH	PRESSURE SWITCH HIGH
PSL	PRESSURE SWITCH LOW
PSV	SELF REG PRESS SAFETY VALVE
PT	PRESSURE TRANSMITTER
PX	ELEMENT CONTROLLED BY PRESSURE
PY	PRESS SIGNAL CONVERT, I/P, OR SOLN
PSLH	PRESSURE SWITCH LOW HIGH

LEVEL INSTRUMENTS

LAH	LEVEL ALARM HIGH
LAL	LEVEL ALARM LOW
LCV	SELF REG LEVEL CONTROL VALVE
LE	LEVEL ELEMENT
LG	LEVEL GAUGE
LI	LEVEL INDICATOR
LIC	LEVEL INDICATING CONTROLLER
LIT	LEVEL INDICATING TRANSMITTER
LSH	LEVEL SWITCH HIGH
LSL	LEVEL SWITCH LOW
LT	LEVEL TRANSMITTER
LV	LEVEL CONTROL OR ON/OFF VALVE
LX	ELEMENT CONTROLLED BY LEVEL
LY	LEVEL SIGNAL CONVERT, I/P, OR SOLN

TEMPERATURE INSTRUMENTS

TAH	TEMPERATURE ALARM HIGH
TAL	TEMPERATURE ALARM LOW
TC	TEMPERATURE CONTROLLER
TE	TEMPERATURE ELEMENT
TG	TEMPERATURE GAUGE
TI	TEMPERATURE INDICATOR
TIC	TEMP INDICATING CONTROLLER
TIT	TEMP INDICATING TRANSMITTER
TSH	TEMPERATURE SWITCH HIGH
TSL	TEMPERATURE SWITCH LOW
TT	TEMPERATURE TRANSMITTER
TV	TEMP CONTROL OR ON/OFF VALVE
TX	ELEMENT CONTROLLED BY TEMP
TY	TEMP SIGNAL CONVERT, I/P, OR SOLN

ELECTRICAL ABBREVIATIONS

JB	JUNCTION BOX
MCP	MAIN CONTROL PANEL
RIO	REMOTE I/O PANEL
PP	POWER PANEL
VFD	VARIABLE FREQUENCY DRIVE
HOA	HAND-OFF-AUTO

ANALYTICAL INSTRUMENTS

AAH	ANALYTICAL ALARM HIGH
AAL	ANALYTICAL ALARM LOW
AE	ANALYTICAL ELEMENT
AI	ANALYTICAL INDICATOR
AIC	ANAL INDICATING CONTROLLER
AIT	ANAL INDICATING TRANSMITTER
ASH	ANALYTICAL SWITCH HIGH
ASL	ANALYTICAL SWITCH LOW
AT	ANALYTICAL TRANSMITTER
AX	ELEMENT CONTROLLED BY ANALYTICAL
AY	ANALYTICAL SIGNAL CONVERT, I/P, OR SOL

MISCELLANEOUS INSTRUMENTS

HS	HAND SWITCH
HI	HAND SWITCH POSITION INDICATOR
II	CURRENT INDICATOR
QQI	TOTALIZER INDICATOR
SC	SPEED CONTROLLER
SI	SPEED INDICATOR
YA	MOTOR ALARM
YC	MOTOR CONTROL
YI	MOTOR ON/OFF INDICATOR
ZIC	SWITCH CLOSE INDICATOR
ZIO	SWITCH OPEN INDICATOR
ZSC	POSITION SWITCH CLOSED
ZSO	POSITION SWITCH OPEN
ZT	POSITION TRANSMITTER
ZI	POSITION INDICATOR

VALVES & EQUIPMENT

AC	AIR COMPRESSOR
ARV	AIR RELEASE VALVE
AS	AIR SUPPLY
B	BLOWER
BT	BULK TOTE
CBD	COARSE BUBBLE DIFFUSER
CV	CHECK VALVE
ED	EDUCTOR
F	FILTER
FBD	FINE BUBBLE DIFFUSER
FL	FAIL LAST (DEFAULT IF NOT SHOWN)
FC	FAIL CLOSED
FO	FAIL OPEN
FQG	CALIBRATION COLUMN
H	HEATER
HCV	HAND CONTROL VALVE
HTR	HEATER
HV	HAND VALVE
M	MIXER
P	PUMP
T	TANK
UV	ULTRAVIOLET
MV	MOTORIZED VALVE

OTHER ABBREVIATIONS

CAP	CAPACITANCE
CIP	CLEAN-IN-PLACE
COND	CONDUCTIVITY
DO2	DISSOLVED OXYGEN
ESP	EMERGENCY STOP
IA	INSTRUMENT AIR
I/P	CURRENT TO PNEUMATIC CONVERTER
ORP	OXIDATION REDUCTION POTENTIAL
pH	HYDROGEN ION
RES	RESISTIVITY
RTD	RESISTANCE TEMP DETECTOR
SOL	SOLENOID
SP	SET POINT
uS	MICROSIEMENS
MIT	MEMBRANE INTEGRITY TEST

REGISTERED PROFESSIONAL ENGINEER — DESIGNING — LICENSED

Vendor Document Status

AGNICO EAGLE

1 ☐ Proceed to next submission and status.

2 ☐ Proceed with as-noted comments noted to next submission and status.

3 ☐ Do not proceed as Revise as noted and resubmit next submission and status.

4 ☐ Complete, no further submission required.

No. Note

Review and work accepted to the extent set out by contract and necessary with the design concept of the Project as expressed in the Contract Documents. By this review acceptance Agnico Eagle assumes no responsibility for errors or omissions in dimensions and quantities. Agnico will not be responsible in any way for any deviation or departure from the Contract Documents or any of the information or data shown on the Vendor Document unless Agnico has been notified of such deviation or departure in writing and has accepted it in writing.

No. 0015-C-290-0010-205-PID-0003 + Sub.002

DOCUMENT FOR INFORMATION

NOTE:
THE INFORMATION, SPECIFICATIONS AND DATA SHOWN ON THIS PRINT ARE FURNISHED BY AND ARE TO REMAIN THE PROPERTY OF H_2O INNOVATION.

THE PURPOSE OF THIS DOCUMENT IS TO FACILITATE THE INSTALLATION, MAINTENANCE AND OPERATION OF THE EQUIPMENT REPRESENTED BY SAID PRINT. NO OTHER USE OF THIS DOCUMENT SHALL BE MADE WITHOUT EXPRESS WRITTEN CONSENT FROM H_2O INNOVATION.

DRAWING REVISION

REV	DATE	REVISION DESCRIPTION	DRAWN	CHKD	ENG	APPVD
05	21/09/2016	REVISED AS BUILT	M.P.	H.S.	H.C.	R.D.
04	08/02/2016	REVISED AS PER COMMENT	M.P.	H.S.	H.C.	H.C.
03	25/07/2016	REVISED AS PER COMMENT	M.P.	H.S.	H.C.	H.C.
02	13/07/2016	REVISED AS PER COMMENT	M.P.	H.S.	H.C.	H.C.
01	11/07/2016	CHANGE SUMP TANK BALL TO GATE VALVE,SOLENOID TO ELECTRIC VALVE,TURBIDITY METER TO 120V	M.P.	H.S.	H.C.	H.C.

h2o innovation — knowledge to share/du savoir à partager

UNLESS NOTED OTHERWISE
INTERPRETATION: ANSI Y14.5
TOLERANCES: FRACTIONAL ±1/64; DECIMALS .X ±0.1, .XX ±0.05, .XXX ±0.025; ANGLES ±0.5°; HOLE SIZES ±1/64"; HOLE CENTERS ±1/64"
DO NOT SCALE PRINTS

MELIADINE STP

216 M3/DAY

TITLE: PROCESS AND INSTRUMENTION DIAGRAMS LEGEND

SCALE: N/A

DRAWING NUMBER: U65875--C01-0001

SHEET: 1 of 1

REVISION: 05

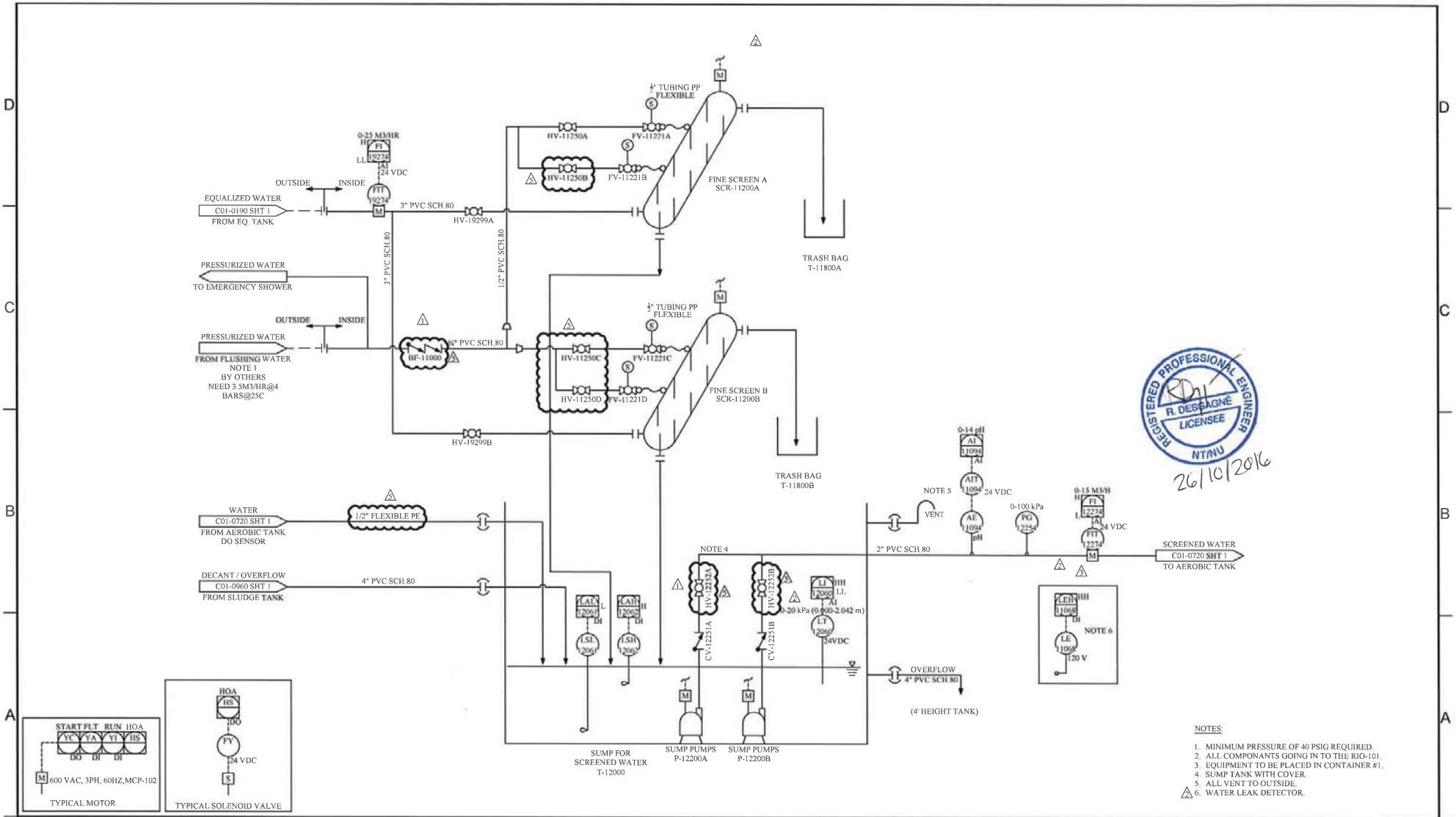

NOTES:

1. MINIMUM PRESSURE OF 40 PSIG REQUIRED.
2. ALL COMPONANTS GOING IN TO THE RIO-101.
3. EQUIPMENT TO BE PLACED IN CONTAINER #1.
4. SUMP TANK WITH COVER.
5. ALL VENT TO OUTSIDE.
6. WATER LEAK DETECTOR.

NOTE:
THE INFORMATION, SPECIFICATIONS AND DATA SHOWN ON THIS PRINT ARE FURNISHED BY AND ARE TO REMAIN THE PROPERTY OF H_2O INNOVATION.

THE PURPOSE OF THIS DOCUMENT IS TO FACILITATE THE INSTALLATION, MAINTENANCE AND OPERATION OF THE EQUIPMENT REPRESENTED BY SAID PRINT. NO OTHER USE OF THIS DOCUMENT SHALL BE MADE WITHOUT EXPRESS WRITTEN CONSENT FROM H_2O INNOVATION.

DRAWING REVISION

REV	DATE	REVISION DESCRIPTION	DRAWN	CHKD	ENG	APPVD
05	21/09/2016	REVISED AS BUILT	M.P.	H.S.	H.C.	R.D.
04	08/02/2016	REVISED AS PER COMMENT	M.P.	H.S.	H.C.	H.C.
03	25/07/2016	REVISED AS PER COMMENT	M.P.	H.S.	H.C.	H.C.
02	13/07/2016	REVISED AS PER COMMENT	M.P.	H.S.	H.C.	H.C.
01	11/07/2016	CHANGE SUMP TANK BALL TO GATE VALVE,SOLENOID TO ELECTRIC VALVE,TURBIDITY METER TO 120V	M.P.	H.S.	H.C.	H.C.

h2o innovation
knowledge to share du savoir à partager

UNLESS NOTED OTHERWISE
INTERPRETATION ANSI Y14.5
TOLERANCES
FRACTIONS ±1/32
DECIMALS 0.X ±0.005
0.XX ±0.015
ANGLES ±0.5°
HOLE SIZES ±1/32
HOLE CENTERS ±1/32
DO NOT SCALE PRINTS

MELIADINE STP

216 M3/DAY

TITLE:
RAW WATER SCREENING
PROCESS & INSTRUMENTATION DIAGRAM

SCALE:	DRAWING NUMBER:	REVISION
N/A	U65875-C01-0110	05

SHEET: 1 of 1

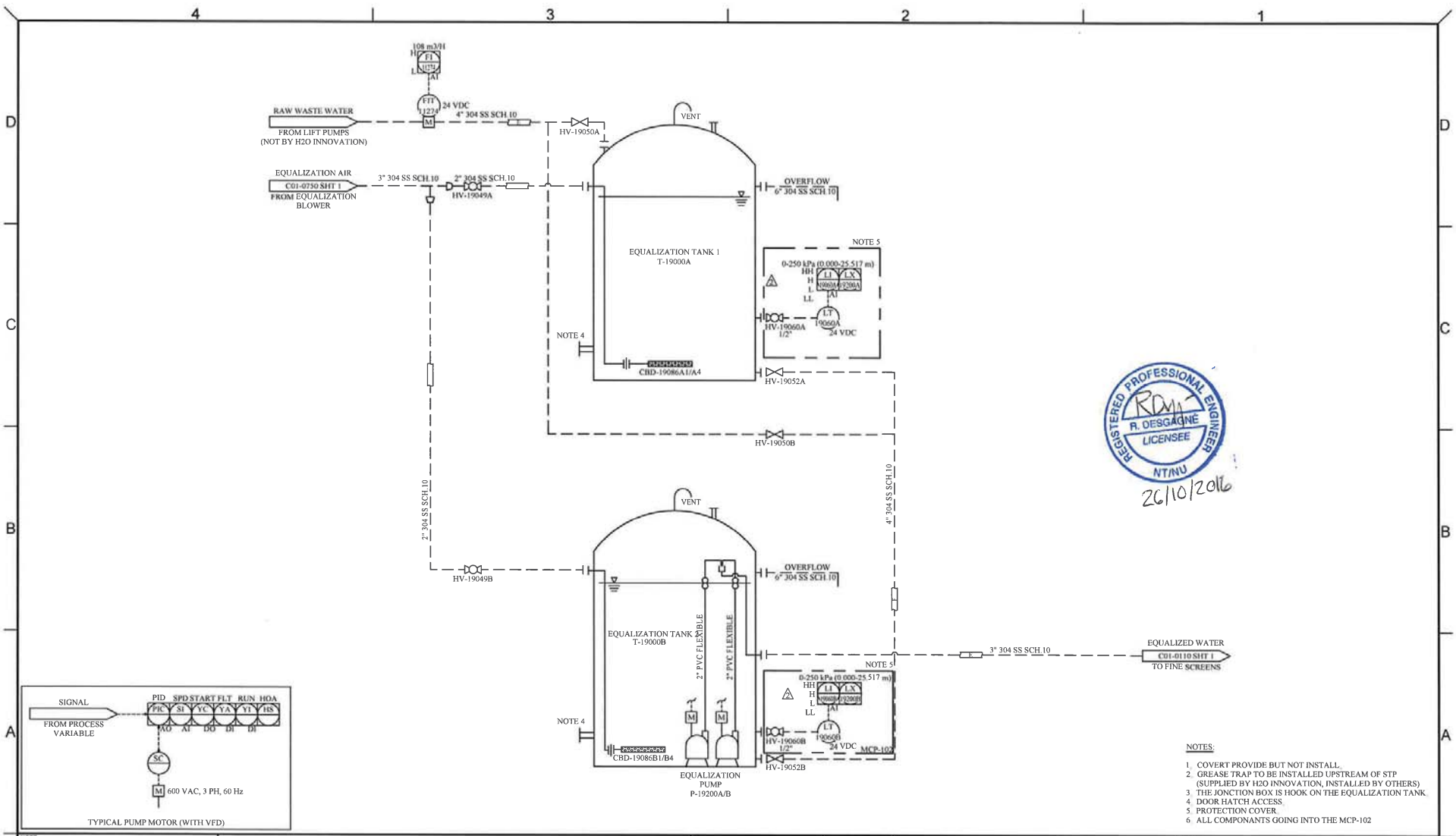

REGISTERED PROFESSIONAL ENGINEER
R. DESGAGNÉ
LICENSEE
NT/NU
26/10/2016

NOTES:

1. COVERT PROVIDE BUT NOT INSTALL.
2. GREASE TRAP TO BE INSTALLED UPSTREAM OF STP (SUPPLIED BY H2O INNOVATION, INSTALLED BY OTHERS)
3. THE JONCTION BOX IS HOOK ON THE EQUALIZATION TANK.
4. DOOR HATCH ACCESS.
5. PROTECTION COVER.
6. ALL COMPONANTS GOING INTO THE MCP-102

NOTE:
THE INFORMATION, SPECIFICATIONS AND DATA SHOWN ON THIS PRINT ARE FURNISHED BY AND ARE TO REMAIN THE PROPERTY OF H_2O INNOVATION.

THE PURPOSE OF THIS DOCUMENT IS TO FACILITATE THE INSTALLATION, MAINTENANCE AND OPERATION OF THE EQUIPMENT REPRESENTED BY SAID PRINT. NO OTHER USE OF THIS DOCUMENT SHALL BE MADE WITHOUT EXPRESS WRITTEN CONSENT FROM H_2O INNOVATION.

DRAWING REVISION

REV	DATE	REVISION DESCRIPTION	DRAWN	CHKD	ENG	APP'VD
05	21/09/2016	REVISED AS BUILT	M.P.	H.S.	H.C.	R.D.
04	06/02/2016	REVISED AS PER COMMENT	M.P.	H.S.	H.C.	H.C.
03	25/07/2016	REVISED AS PER COMMENT	M.P.	H.S.	H.C.	H.C.
02	13/07/2016	REVISED AS PER COMMENT	M.P.	H.S.	H.C.	H.C.
01	11/07/2016	CHANGE SUMP TANK BALL TO GATE VALVE,SOLENOID TO ELECTRIC VALVE,TURBIDITY METER TO 120V	M.P.	H.S.	H.C.	H.C.

h2o innovation
knowledge to share du savoir à partager

UNLESS NOTED OTHERWISE
DO NOT SCALE PRINTS

MELIADINE STP

216 M3/DAY

TITLE:
FEED WATER EQUALIZATION
PROCESS & INSTRUMENTATION DIAGRAM

SCALE:	DRAWING NUMBER:	REVISION
N/A	U65875-C01-0190	05

SHEET: 1 of 1

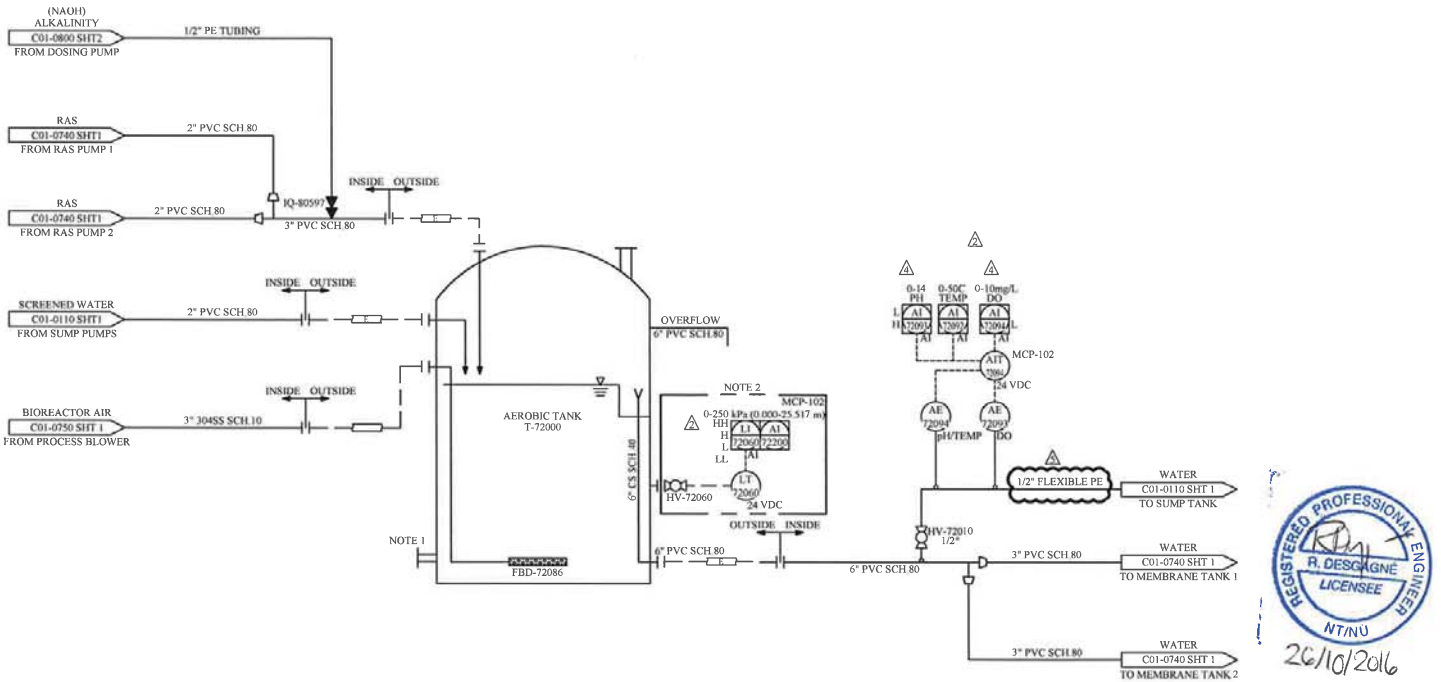

REGISTERED PROFESSIONAL ENGINEER
R. DESCHÊNES
LICENSEE
NT/NU
26/10/2016

NOTES:

1. DOOR HATCH ACCESS
2. PROTECTION COVER

NOTE:
THE INFORMATION, SPECIFICATIONS AND DATA SHOWN ON THIS PRINT ARE FURNISHED BY AND ARE TO REMAIN THE PROPERTY OF H_2O INNOVATION.

THE PURPOSE OF THIS DOCUMENT IS TO FACILITATE THE INSTALLATION, MAINTENANCE AND OPERATION OF THE EQUIPMENT REPRESENTED BY SAID PRINT. NO OTHER USE OF THIS DOCUMENT SHALL BE MADE WITHOUT EXPRESS WRITTEN CONSENT FROM H_2O INNOVATION.

DRAWING REVISION

REV	DATE (dd/mm/yyyy)	REVISION DESCRIPTION	DRAWN	CHKD	ENG	APPVD
05	21/09/2016	REVISED AS BUILT	M.P.	H.S.	H.C.	R.D.
04	08/02/2016	REVISED AS PER COMMENT	M.P.	H.S.	H.C.	H.C.
03	25/07/2016	REVISED AS PER COMMENT	M.P.	H.S.	H.C.	H.C.
02	13/07/2016	REVISED AS PER COMMENT	M.P.	H.S.	H.C.	H.C.
01	11/07/2016	CHANGE SUMP TANK BALL TO GATE VALVE,SOLENOID TO ELECTRIC VALVE,TURBIDITY METER TO 120V	M.P.	H.S.	H.C.	H.C.

h2o innovation
knowledge to share du savoir à partager

UNLESS NOTED OTHERWISE
DO NOT SCALE PRINTS

MELIADINE STP

216 M3/DAY

TITLE:
AEROBIC TANK
PROCESS & INSTRUMENTATION DIAGRAM

SCALE:	DRAWING NUMBER:	REVISION
N/A	U65875-C01-0720	05
	SHEET: 1 of 1	

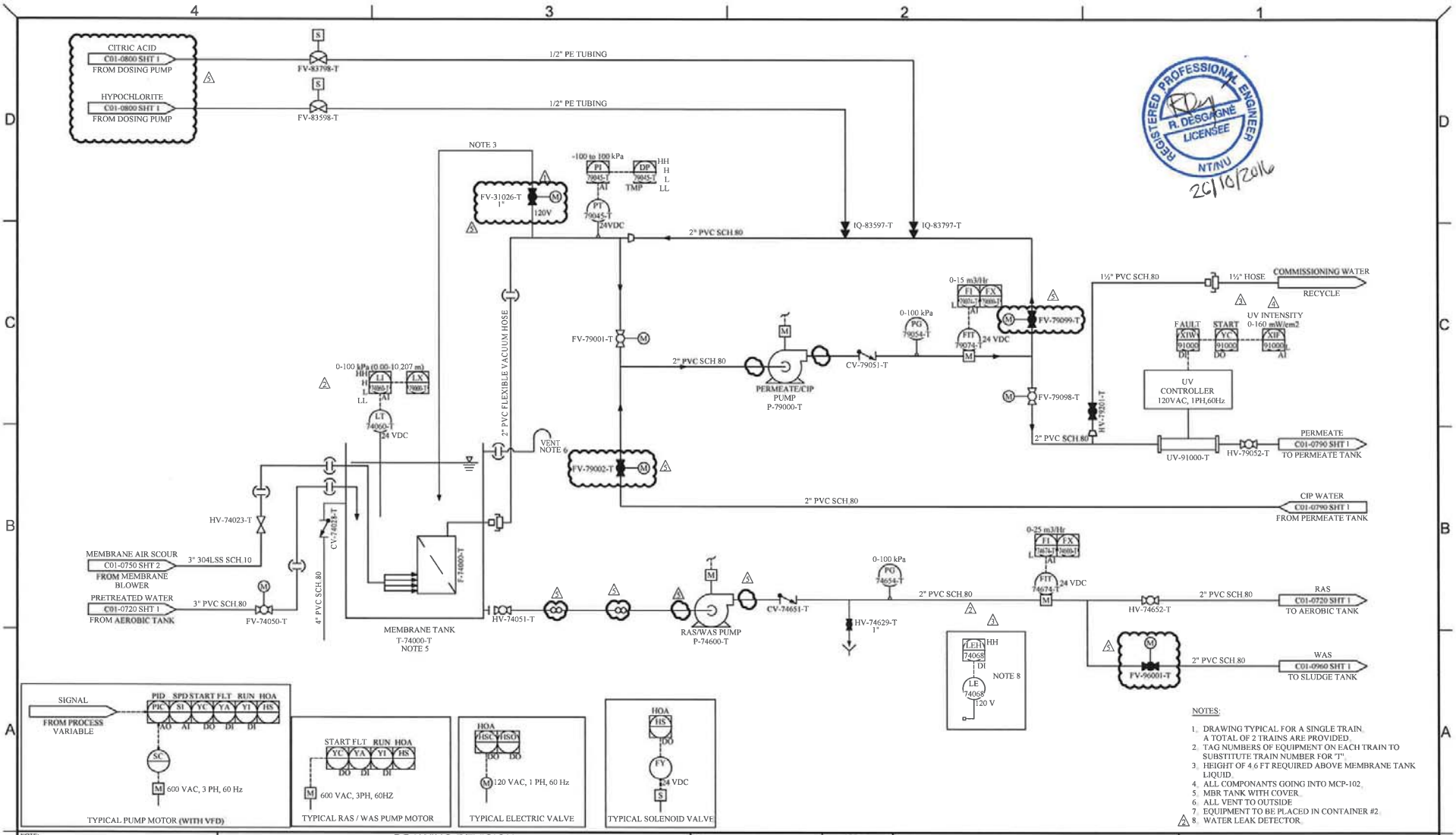

REGISTERED PROFESSIONAL ENGINEER
R. DESGAGNÉ
LICENSEE
NT/NU
26/10/2016

NOTES:

1. DRAWING TYPICAL FOR A SINGLE TRAIN. A TOTAL OF 2 TRAINS ARE PROVIDED.
2. TAG NUMBERS OF EQUIPMENT ON EACH TRAIN TO SUBSTITUTE TRAIN NUMBER FOR "T".
3. HEIGHT OF 4.6 FT REQUIRED ABOVE MEMBRANE TANK LIQUID.
4. ALL COMPONANTS GOING INTO MCP-102.
5. MBR TANK WITH COVER.
6. ALL VENT TO OUTSIDE.
7. EQUIPMENT TO BE PLACED IN CONTAINER #2.
8. WATER LEAK DETECTOR.

NOTE:
THE INFORMATION, SPECIFICATIONS AND DATA SHOWN ON THIS PRINT ARE FURNISHED BY AND ARE TO REMAIN THE PROPERTY OF H_2O INNOVATION.

THE PURPOSE OF THIS DOCUMENT IS TO FACILITATE THE INSTALLATION, MAINTENANCE AND OPERATION OF THE EQUIPMENT REPRESENTED BY SAID PRINT. NO OTHER USE OF THIS DOCUMENT SHALL BE MADE WITHOUT EXPRESS WRITTEN CONSENT FROM H_2O INNOVATION.

DRAWING REVISION

REV	DATE	REVISION DESCRIPTION	DRAWN	CHKD	ENG	APPVD
05	21/09/2016	REVISED AS BUILT	M.P.	H.S.	H.C.	R.D.
04	08/02/2016	REVISED AS PER COMMENT	M.P.	H.S.	H.C.	H.C.
03	25/07/2016	REVISED AS PER COMMENT	M.P.	H.S.	H.C.	H.C.
02	13/07/2016	REVISED AS PER COMMENT	M.P.	H.S.	H.C.	H.C.
01	11/07/2016	CHANGE SUMP TANK BALL TO GATE VALVE,SOLENOID TO ELECTRIC VALVE,TURBIDITY METER TO 120V	M.P.	H.S.	H.C.	H.C.

h2o innovation
innovation to share,du savoir à partager

UNLESS NOTED OTHERWISE
INTERPRETATION ANSI Y14.5
TOLERANCES
FRACTIONS ±x"
DECIMALS X.X ±0.03
X.XX ±0.01
ANGLES ±1°
HOLE SIZES +x" -x"
HOLE CENTERS ±x"
DO NOT SCALE PRINTS

MELIADINE STP

216 M3/DAY

TITLE:
MEMBRANE FILTRATION
PROCESS & INSTRUMENTATION DIAGRAM

SCALE:	DRAWING NUMBER:	REVISION
N/A	U65875-C01-0740	05
	SHEET: 1 of 1	

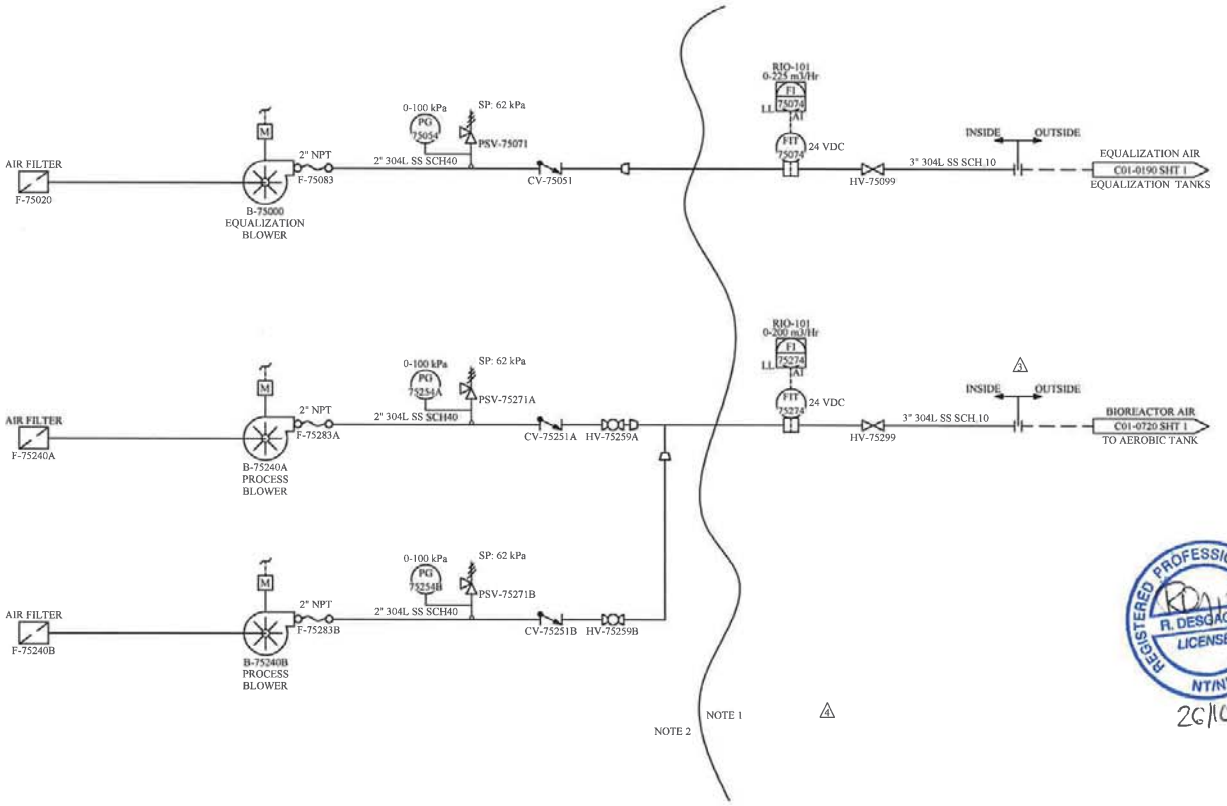

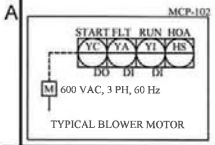

NOTES:

1. EQUIPMENT TO BE PLACED IN CONTAINER #1.
2. EQUIPMENT TO BE PLACED IN CONTAINER #2.

NOTE:
THE INFORMATION, SPECIFICATIONS AND DATA SHOWN ON THIS PRINT ARE FURNISHED BY AND ARE TO REMAIN THE PROPERTY OF H_2O INNOVATION.

THE PURPOSE OF THIS DOCUMENT IS TO FACILITATE THE INSTALLATION, MAINTENANCE AND OPERATION OF THE EQUIPMENT REPRESENTED BY SAID PRINT. NO OTHER USE OF THIS DOCUMENT SHALL BE MADE WITHOUT EXPRESS WRITTEN CONSENT FROM H_2O INNOVATION.

DRAWING REVISION

REV	DATE	REVISION DESCRIPTION	DRAWN	CHKD	ENG	APPVD
05	21/09/2016	REVISED AS BUILT	M.P.	H.S.	H.C.	R.D.
04	06/02/2016	REVISED AS PER COMMENT	M.P.	H.S.	H.C.	H.C.
03	25/07/2016	REVISED AS PER COMMENT	M.P.	H.S.	H.C.	H.C.
02	13/07/2016	REVISED AS PER COMMENT	M.P.	H.S.	H.C.	H.C.
01	11/07/2016	CHANGE SUMP TANK BALL TO GATE VALVE,SOLENOID TO ELECTRIC VALVE,TURBIDITY METER TO 120V	M.P.	H.S.	H.C.	H.C.

h2o innovation
knowledge to share, du savoir à partager

UNLESS NOTED OTHERWISE
INTERPRETATION ANSI Y14.5
TOLERANCES
FRACTIONS ±1/16
DECIMALS .XX ±0.030
.XXX ±0.015
ANGLES ±0.5°
HOLE SIZES ±1/16
HOLE CENTERS ±1/16
DO NOT SCALE PRINTS

MELIADINE STP

216 M3/DAY

TITLE:
BLOWERS FOR MBR SYSTEM
PROCESS & INSTRUMENTATION DIAGRAM

SCALE:	DRAWING NUMBER:	REVISION
N/A	U65875-C01-0750 SHEET: 1 of 2	05

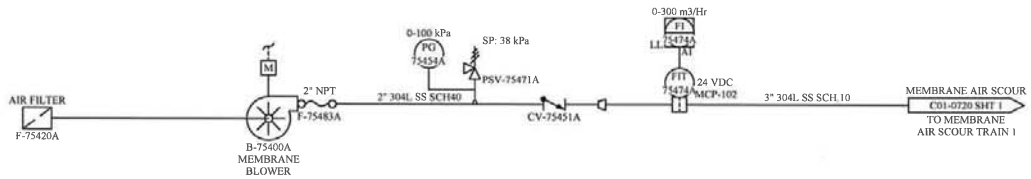

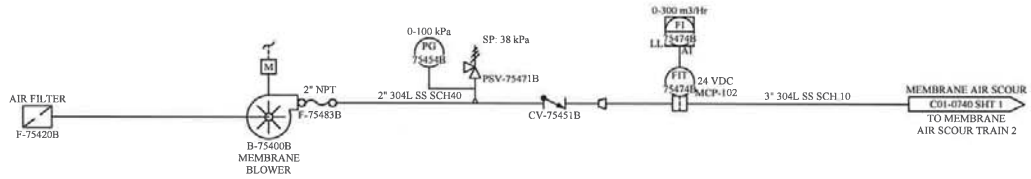

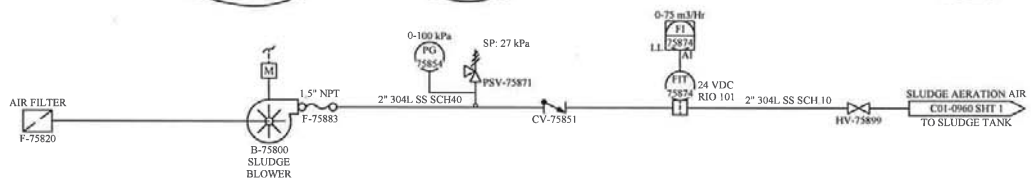

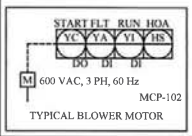

REGISTERED PROFESSIONAL ENGINEER
R. DESGAGNÉ
LICENSEE
NT/NU
26/10/2016

NOTES:
1. EQUIPMENT TO BE PLACED IN CONTAINER #1.
2. EQUIPMENT TO BE PLACED IN CONTAINER #2.

NOTE:
THE INFORMATION, SPECIFICATIONS AND DATA SHOWN ON THIS PRINT ARE FURNISHED BY AND ARE TO REMAIN THE PROPERTY OF H_2O INNOVATION.

THE PURPOSE OF THIS DOCUMENT IS TO FACILITATE THE INSTALLATION, MAINTENANCE AND OPERATION OF THE EQUIPMENT REPRESENTED BY SAID PRINT. NO OTHER USE OF THIS DOCUMENT SHALL BE MADE WITHOUT EXPRESS WRITTEN CONSENT FROM H_2O INNOVATION.

DRAWING REVISION

REV	DATE	REVISION DESCRIPTION	DRAWN	CHKD	ENG	APPVD
05	21/09/2016	REVISED AS BUILT	M.P.	H.S.	H.C.	R.D.
04	08/02/2016	REVISED AS PER COMMENT	M.P.	H.S.	H.C.	H.C.
03	25/07/2016	REVISED AS PER COMMENT	M.P.	H.S.	H.C.	H.C.
02	13/07/2016	REVISED AS PER COMMENT	M.P.	H.S.	H.C.	H.C.
01	11/07/2016	CHANGE SUMP TANK BALL TO GATE VALVE,SOLENOID TO ELECTRIC VALVE,TURBIDITY METER TO 120V	M.P.	H.S.	H.C.	H.C.

h2o innovation
Innovation to share du savoir à partager

UNLESS NOTED OTHERWISE
INTERPRETATION ANSI Y14.5
TOLERANCES
FRACTIONS ±1/-
DECIMALS 0.XX ±0.030
0.XXX ±0.015
ANGLES ±0.5°
HOLE SIZES ±1/-
HOLE LOCATIONS ±1/-
DO NOT SCALE PRINTS

MELIADINE STP

216 M3/DAY

TITLE:
BLOWERS FOR MBR SYSTEM
PROCESS & INSTRUMENTATION DIAGRAM

SCALE: N/A

DRAWING NUMBER: U65875-C01-0750
SHEET: 2 of 2

REVISION: 05

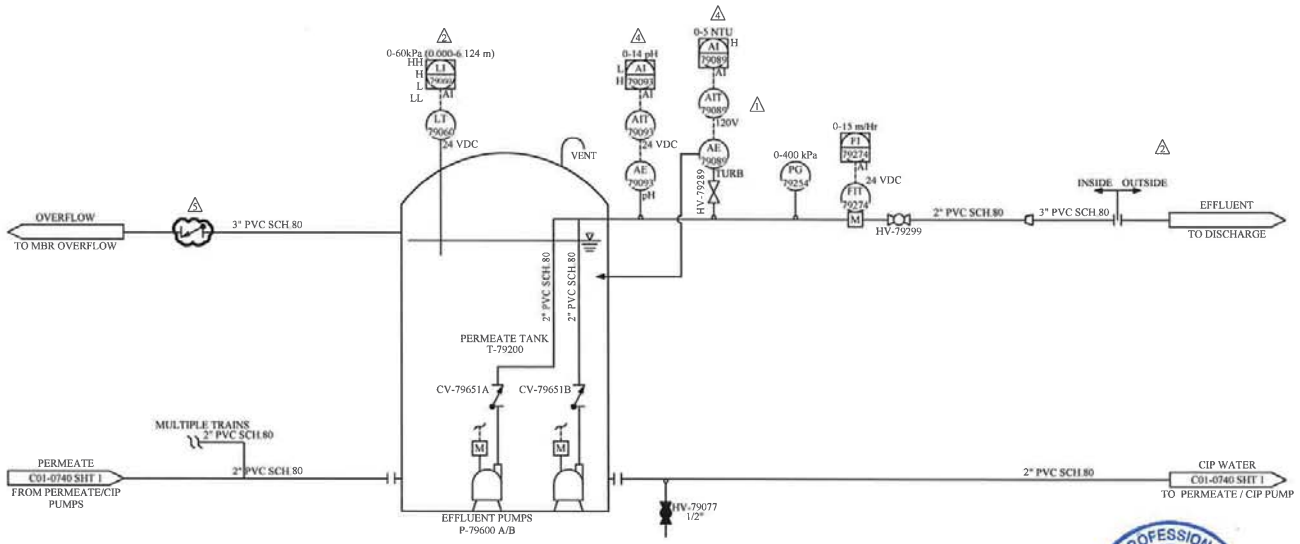

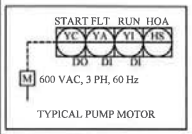

REGISTERED PROFESSIONAL ENGINEER
R. DESCHAGNÉ
LICENSEE
NT/NU
26/10/2016

NOTES:

1. ALL COMPONANTS GOING INTO MCP-102.
2. EQUIPMENT TO BE PLACED IN CONTAINER #2.

NOTE:
THE INFORMATION, SPECIFICATIONS AND DATA SHOWN ON THIS PRINT ARE FURNISHED BY AND ARE TO REMAIN THE PROPERTY OF H_2O INNOVATION.

THE PURPOSE OF THIS DOCUMENT IS TO FACILITATE THE INSTALLATION, MAINTENANCE AND OPERATION OF THE EQUIPMENT REPRESENTED BY SAID PRINT. NO OTHER USE OF THIS DOCUMENT SHALL BE MADE WITHOUT EXPRESS WRITTEN CONSENT FROM H_2O INNOVATION.

DRAWING REVISION

REV	DATE	REVISION DESCRIPTION	DRAWN	CHKD	ENG	APPVD
05	21/09/2016	REVISED AS BUILT	M.P.	H.S.	H.C.	R.D.
04	08/02/2016	REVISED AS PER COMMENT	M.P.	H.S.	H.C.	H.C.
03	25/07/2016	REVISED AS PER COMMENT	M.P.	H.S.	H.C.	H.C.
02	13/07/2016	REVISED AS PER COMMENT	M.P.	H.S.	H.C.	H.C.
01	11/07/2016	CHANGE SUMP TANK BALL TO GATE VALVE,SOLENOID TO ELECTRIC VALVE,TURBIDITY METER TO 120V	M.P.	H.S.	H.C.	H.C.

h2o innovation
knowledge to share, du savoir à partager

UNLESS NOTED OTHERWISE
INTERPRETATION ANSI Y14.5
TOLERANCES
FRACTIONS ±1/64"
DECIMALS .XX ±0.030
.XXX ±0.010
ANGLES ±0.5°
HOLE SIZES ±1/64"
HOLE CENTERS ±1/64"
DO NOT SCALE PRINTS

MELIADINE STP

216 M3/DAY

TITLE:
PERMEATE TANK
PROCESS & INSTRUMENTATION DIAGRAM

SCALE: N/A

DRAWING NUMBER: U65875-C01-0790

SHEET: 1 of 1

REVISION: 05

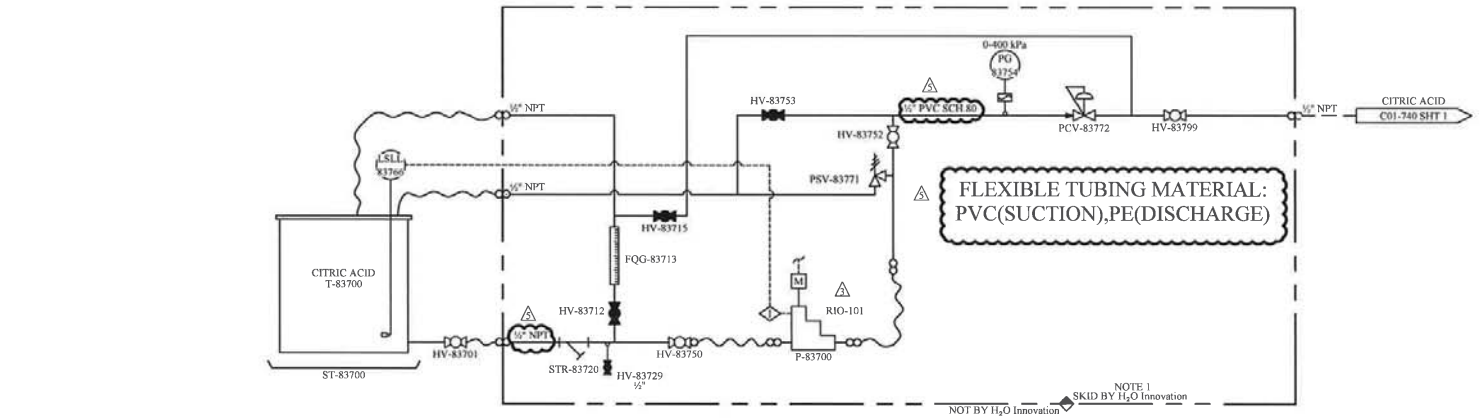

CITRIC ACID, 50 % SOLUTION DOSING SYSTEM

NOTE 1
NOTE 2

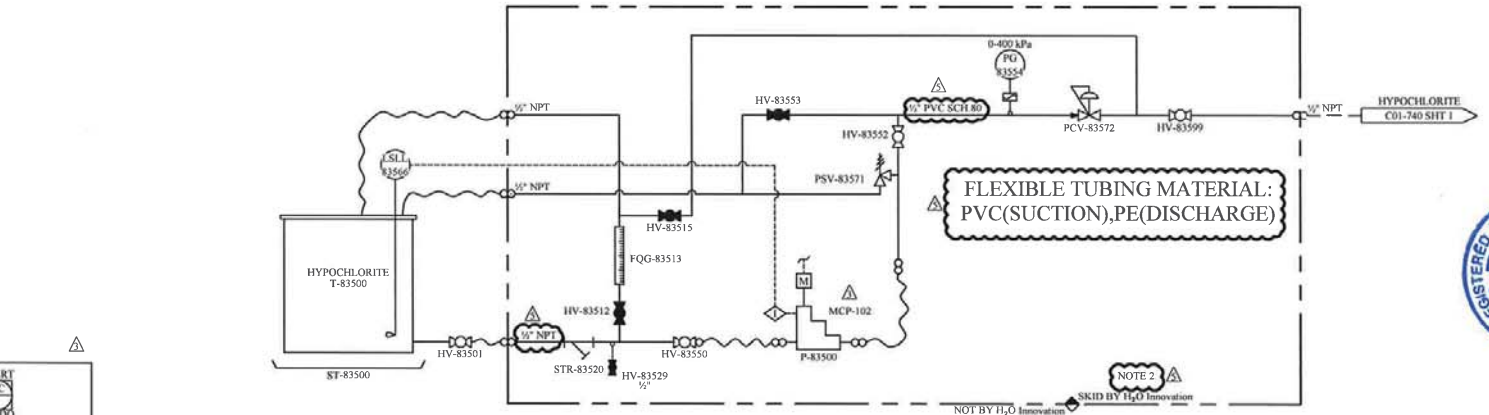

SODIUM HYPOCHLORITE, 10.3 % DOSING SYSTEM

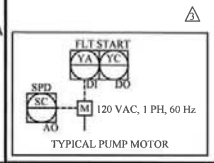

TYPICAL PUMP MOTOR

REGISTERED PROFESSIONAL ENGINEER
R. DESJAGNÉ
LICENSEE
NT/NU
26/10/2016

NOTES:
1. EQUIPMENT TO BE PLACED IN CONTAINER #1
2. EQUIPMENT TO BE PLACED IN CONTAINER #2

NOTE:
THE INFORMATION, SPECIFICATIONS AND DATA SHOWN ON THIS PRINT ARE FURNISHED BY AND ARE TO REMAIN THE PROPERTY OF H_2O INNOVATION.

THE PURPOSE OF THIS DOCUMENT IS TO FACILITATE THE INSTALLATION, MAINTENANCE AND OPERATION OF THE EQUIPMENT REPRESENTED BY SAID PRINT. NO OTHER USE OF THIS DOCUMENT SHALL BE MADE WITHOUT EXPRESS WRITTEN CONSENT FROM H_2O INNOVATION.

DRAWING REVISION

REV	DATE	REVISION DESCRIPTION	DRAWN	CHKD	ENG	APPVD
05	21/09/2016	REVISED AS BUILT	M.P.	H.S.	H.C.	R.D.
04	08/02/2016	REVISED AS PER COMMENT	M.P.	H.S.	H.C.	H.C.
03	25/07/2016	REVISED AS PER COMMENT	M.P.	H.S.	H.C.	H.C.
02	13/07/2016	REVISED AS PER COMMENT	M.P.	H.S.	H.C.	H.C.
01	11/07/2016	CHANGE SUMP TANK BALL TO GATE VALVE,SOLENOID TO ELECTRIC VALVE,TURBIDITY METER TO 120V	M.P.	H.S.	H.C.	H.C.

h2o innovation
Innouvelge to share,du savoir à partager

UNLESS NOTED OTHERWISE
INTERPRETATION ANSI Y14.5
TOLERANCES
FRACTIONS ±1/64
DECIMALS X.X ±0.030
X.XX ±0.015
X.XXX ±0.010
ANGLES ±0.5°
HOLE SIZES +1/64" -0"
HOLE CENTERS ±1/64"
DO NOT SCALE PRINTS

MELIADINE STP

216 M3/DAY

TITLE:
DOSING SKIDS - CLEANING CHEMICALS
PROCESS & INSTRUMENTATION DIAGRAM

SCALE:	DRAWING NUMBER:	REVISION
N/A	U65875-C01-0800	05
	SHEET: 1 of 2	

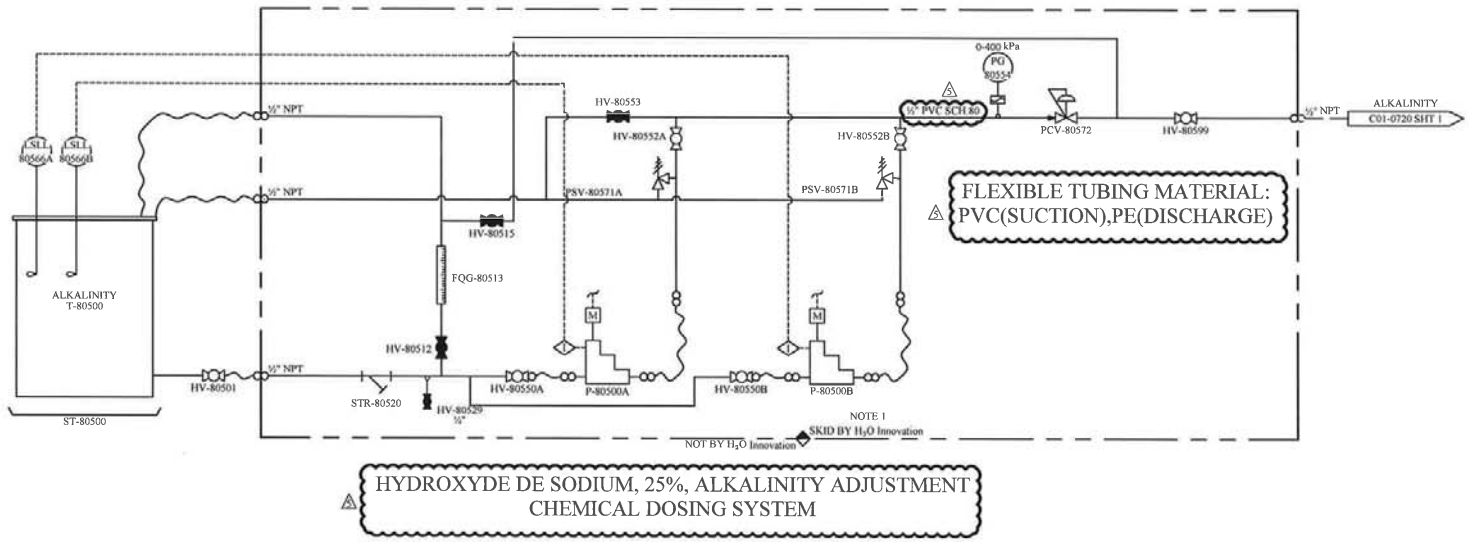

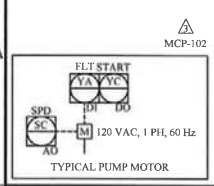

REGISTERED PROFESSIONAL ENGINEER
R. DESGAGNÉ
LICENSEE
NT/NU
26/10/2016

NOTES:

1. EQUIPMENT TO BE PLACED IN CONTAINER #2.

NOTE:
THE INFORMATION, SPECIFICATIONS AND DATA SHOWN ON THIS PRINT ARE FURNISHED BY AND ARE TO REMAIN THE PROPERTY OF H_2O INNOVATION

THE PURPOSE OF THIS DOCUMENT IS TO FACILITATE THE INSTALLATION, MAINTENANCE AND OPERATION OF THE EQUIPMENT REPRESENTED BY SAID PRINT. NO OTHER USE OF THIS DOCUMENT SHALL BE MADE WITHOUT EXPRESS WRITTEN CONSENT FROM H_2O INNOVATION.

DRAWING REVISION

REV	DATE	REVISION DESCRIPTION	DRAWN	CHKD	ENG	APPVD
05	21/09/2016	REVISED AS BUILT	M.P.	H.S.	H.C.	R.D.
04	08/02/2016	REVISED AS PER COMMENT	M.P.	H.S.	H.C.	H.C.
03	25/07/2016	REVISED AS PER COMMENT	M.P.	H.S.	H.C.	H.C.
02	13/07/2016	REVISED AS PER COMMENT	M.P.	H.S.	H.C.	H.C.
01	11/07/2016	CHANGE SUMP TANK BALL TO GATE VALVE,SOLENOID TO ELECTRIC VALVE,TURBIDITY METER TO 120V	M.P.	H.S.	H.C.	H.C.

h2o innovation
Insuledge la share du savoir à partager

UNLESS NOTED OTHERWISE
INTERPRETATION ANSI Y14.5
DO NOT SCALE PRINTS

MELIADINE STP

216 M3/DAY

TITLE:
DOSING SKIDS - ALKALINITY
PROCESS & INSTRUMENTATION DIAGRAM

SCALE:	DRAWING NUMBER:	REVISION
N/A	U65875-C01-0800 SHEET: 2 of 2	05

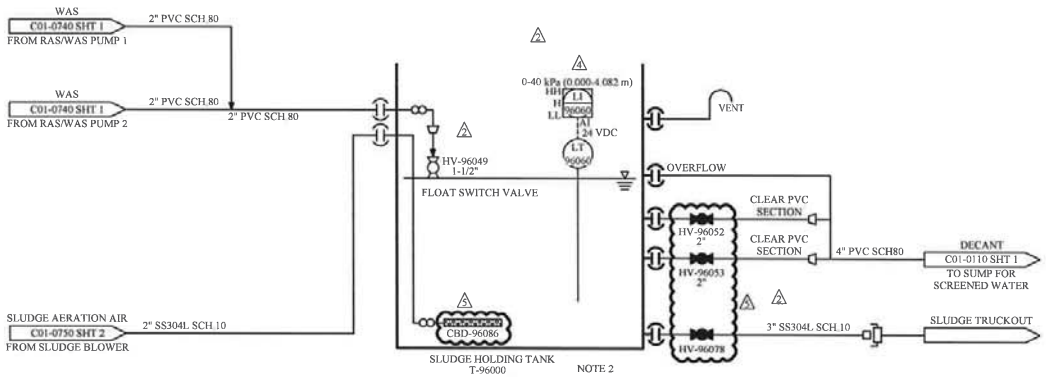

REGISTERED PROFESSIONAL ENGINEER
R. DESGAGNÉ
LICENSEE
NT/NU
26/10/2016

NOTES:

1. ALL COMPONANTS GOING INTO RIO 101.
2. SLUDGE HOLDING TANK WITH COVER.
3. ALL VENT TO OUTSIDE.

NOTE:
THE INFORMATION, SPECIFICATIONS AND DATA SHOWN ON THIS PRINT ARE FURNISHED BY AND ARE TO REMAIN THE PROPERTY OF H_2O INNOVATION.

THE PURPOSE OF THIS DOCUMENT IS TO FACILITATE THE INSTALLATION, MAINTENANCE AND OPERATION OF THE EQUIPMENT REPRESENTED BY SAID PRINT. NO OTHER USE OF THIS DOCUMENT SHALL BE MADE WITHOUT EXPRESS WRITTEN CONSENT FROM H_2O INNOVATION.

DRAWING REVISION

REV	DATE	REVISION DESCRIPTION	DRAWN	CHKD	ENG	APPVD
05	21/09/2016	REVISED AS BUILT	M.P.	H.S.	H.C.	R.D.
04	08/02/2016	REVISED AS PER COMMENT	M.P.	H.S.	H.C.	H.C.
03	25/07/2016	REVISED AS PER COMMENT	M.P.	H.S.	H.C.	H.C.
02	13/07/2016	REVISED AS PER COMMENT	M.P.	H.S.	H.C.	H.C.
01	11/07/2016	CHANGE SUMP TANK BALL TO GATE VALVE,SOLENOID TO ELECTRIC VALVE,TURBIDITY METER TO 120V	M.P.	H.S.	H.C.	H.C.

h2o innovation
Knowledge to share du savoir à partager

UNLESS NOTED OTHERWISE
INTERPRETATION ANSI Y14.5
TOLERANCES
FRACTIONS ±1/2°
DECIMALS .XX ±0.500
.XXX ±0.015
ANGLES ±0.5°
HOLE SIZES ±1/2°
HOLE CENTERS ±1/2°
DO NOT SCALE PRINTS

MELIADINE STP

216 M3/DAY

TITLE:
SLUDGE HANDLING SYSTEM
PROCESS & INSTRUMENTATION DIAGRAM

SCALE:	DRAWING NUMBER:	REVISION
N/A	U65875-C01-0960	05
	SHEET: 1 of 1	

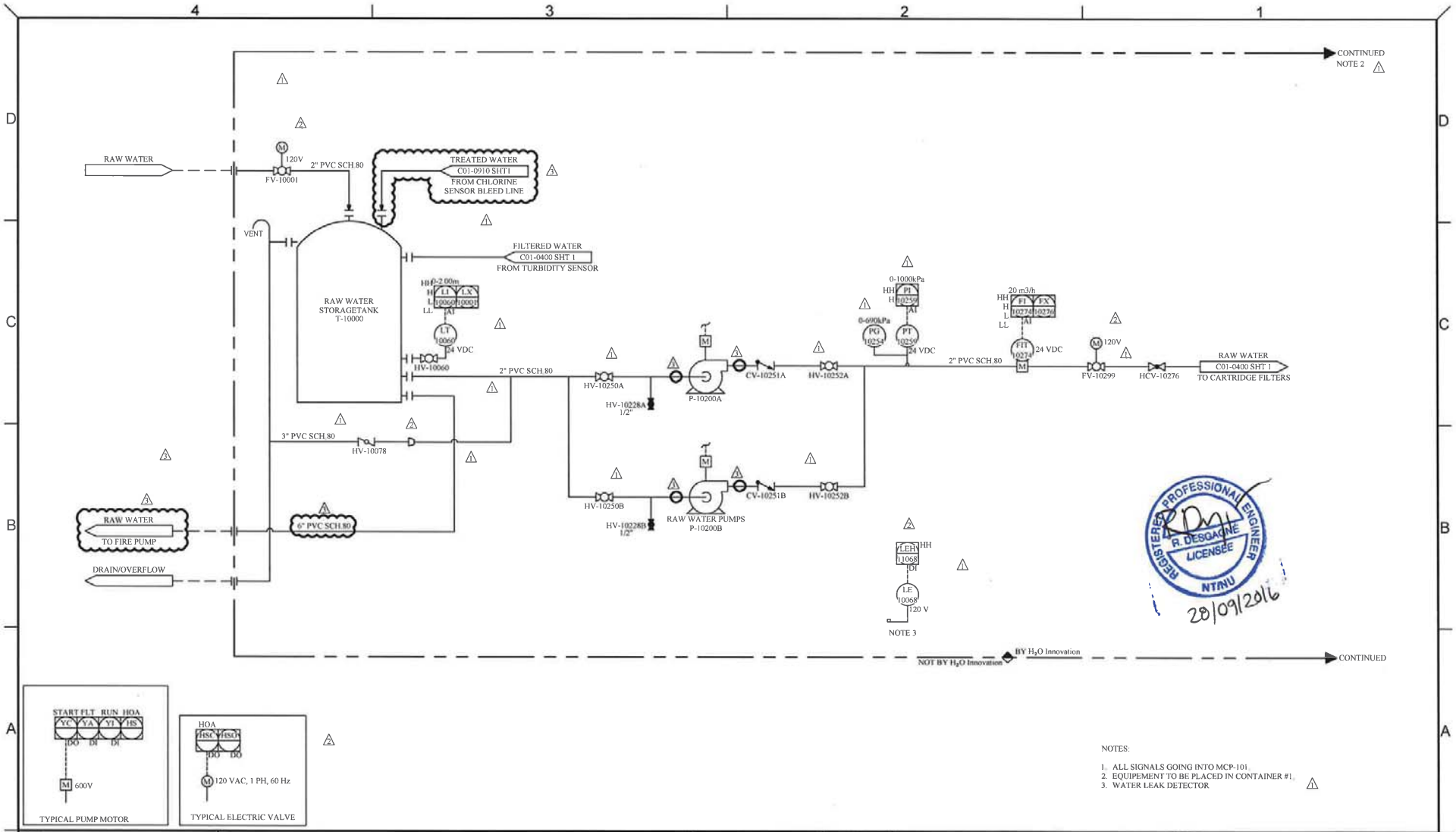

NOTES:

1. ALL SIGNALS GOING INTO MCP-101.
2. EQUIPEMENT TO BE PLACED IN CONTAINER #1.
3. WATER LEAK DETECTOR

NOTE:
THE INFORMATION, SPECIFICATIONS AND DATA SHOWN ON THIS PRINT ARE FURNISHED BY AND ARE TO REMAIN THE PROPERTY OF H_2O INNOVATION.

THE PURPOSE OF THIS DOCUMENT IS TO FACILITATE THE INSTALLATION, MAINTENANCE AND OPERATION OF THE EQUIPMENT REPRESENTED BY SAID PRINT. NO OTHER USE OF THIS DOCUMENT SHALL BE MADE WITHOUT EXPRESS WRITTEN CONSENT FROM H_2O INNOVATION.

DRAWING REVISION

REV	DATE	REVISION DESCRIPTION	DRAWN	CHKD	ENG	APPVD
03	09/08/2016	AS BUILT	M.P.	S.B.	R.D.	A.M.
02	25/07/2016	REVISED AS PER COMMENTS	M.P.	S.B.	R.D.	A.M.
01	29/06/2016	AS PER COMMENTS	M.P.	S.B.	R.D.	A.M.
00	13/06/2016	INITIAL RELEASE	M.P.	S.B.	R.D.	A.M.

h2o innovation
Innoulaige to share du savoir à partager

UNLESS NOTED OTHERWISE
INTERPRETATION ANSI Y14.5
TOLERANCES
FRACTIONS ±1/16
DECIMALS 0.X ±0.030
0.XX ±0.015
ANGLES ±0.5°
HOLE SIZES ±1/2°
HOLE CENTERS ±1/2°
DO NOT SCALE PRINTS

MELIADINE

WTP CONTAINERIZED UNIT

TITLE:
RAW WATER FEED SYSTEM
PROCESS & INSTRUMENTATION DIAGRAM

SCALE: N/A
DRAWING NUMBER: P65873-C01-0100
SHEET: 1 of 1
REVISION: 03

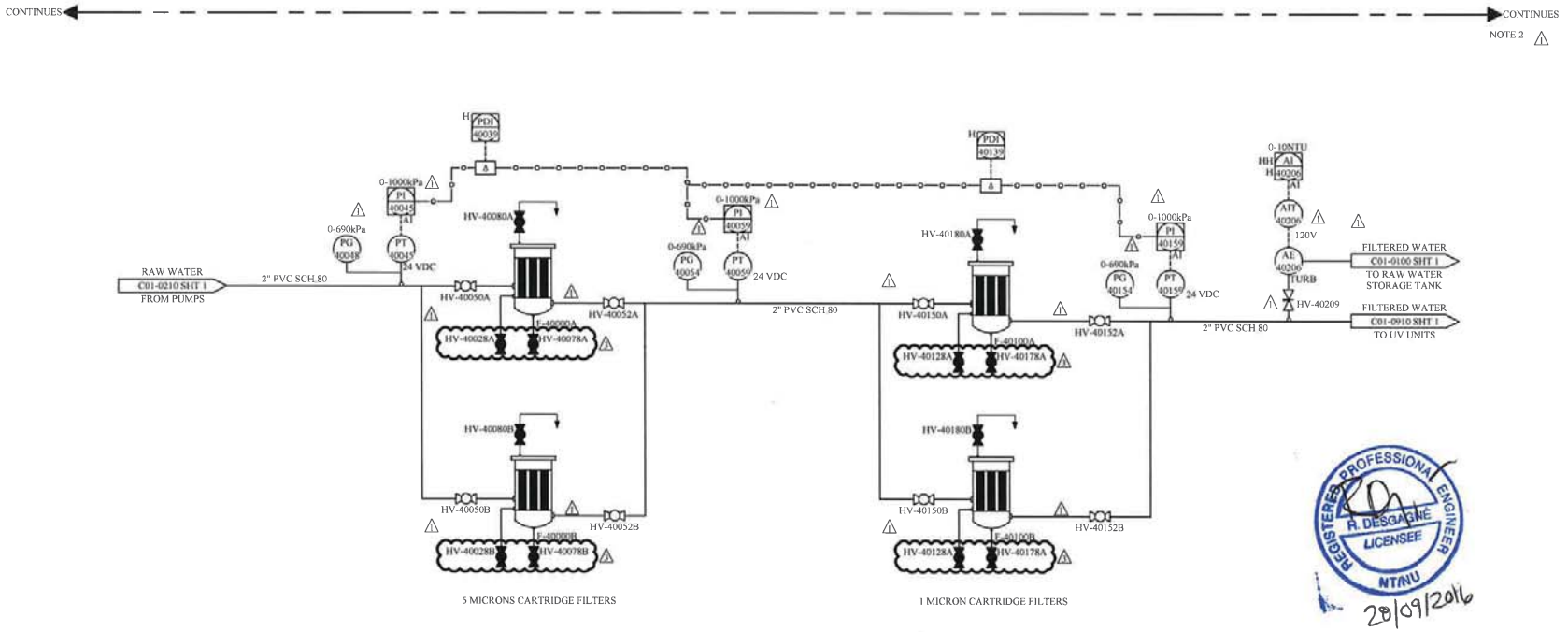

REGISTERED PROFESSIONAL ENGINEER
R. DESGAGNE
LICENSEE
NTNU
29/09/2016

NOTES:

1. ALL SIGNALS GOING INTO MCP-101.
2. EQUIPEMENT TO BE PLACED IN CONTAINER #1.

NOTE:
THE INFORMATION, SPECIFICATIONS AND DATA SHOWN ON THIS PRINT ARE FURNISHED BY AND ARE TO REMAIN THE PROPERTY OF H_2O INNOVATION.

THE PURPOSE OF THIS DOCUMENT IS TO FACILITATE THE INSTALLATION, MAINTENANCE AND OPERATION OF THE EQUIPMENT REPRESENTED BY SAID PRINT. NO OTHER USE OF THIS DOCUMENT SHALL BE MADE WITHOUT EXPRESS WRITTEN CONSENT FROM H_2O INNOVATION.

DRAWING REVISION

REV	DATE	REVISION DESCRIPTION	DRAWN	CHKD	ENG	APPVD
03	09/08/2016	AS BUILT	M.P.	S.B.	R.D.	A.M.
02	25/07/2016	REVISED AS PER COMMENTS	M.P.	S.B.	R.D.	A.M.
01	29/06/2016	AS PER COMMENTS	M.P.	S.B.	R.D.	A.M.
00	13/06/2016	INITIAL RELEASE	M.P.	S.B.	R.D.	A.M.

h2O innovation
knowledge to share du savoir à partager

UNLESS NOTED OTHERWISE
DO NOT SCALE PRINTS

MELIADINE

WTP CONTAINERIZED UNIT

TITLE:
CARTRIDGE FILTERS
PROCESS & INSTRUMENTATION DIAGRAM

SCALE:	DRAWING NUMBER:	REVISION
N/A	P65873-C01-0400	03

SHEET: 1 of 1

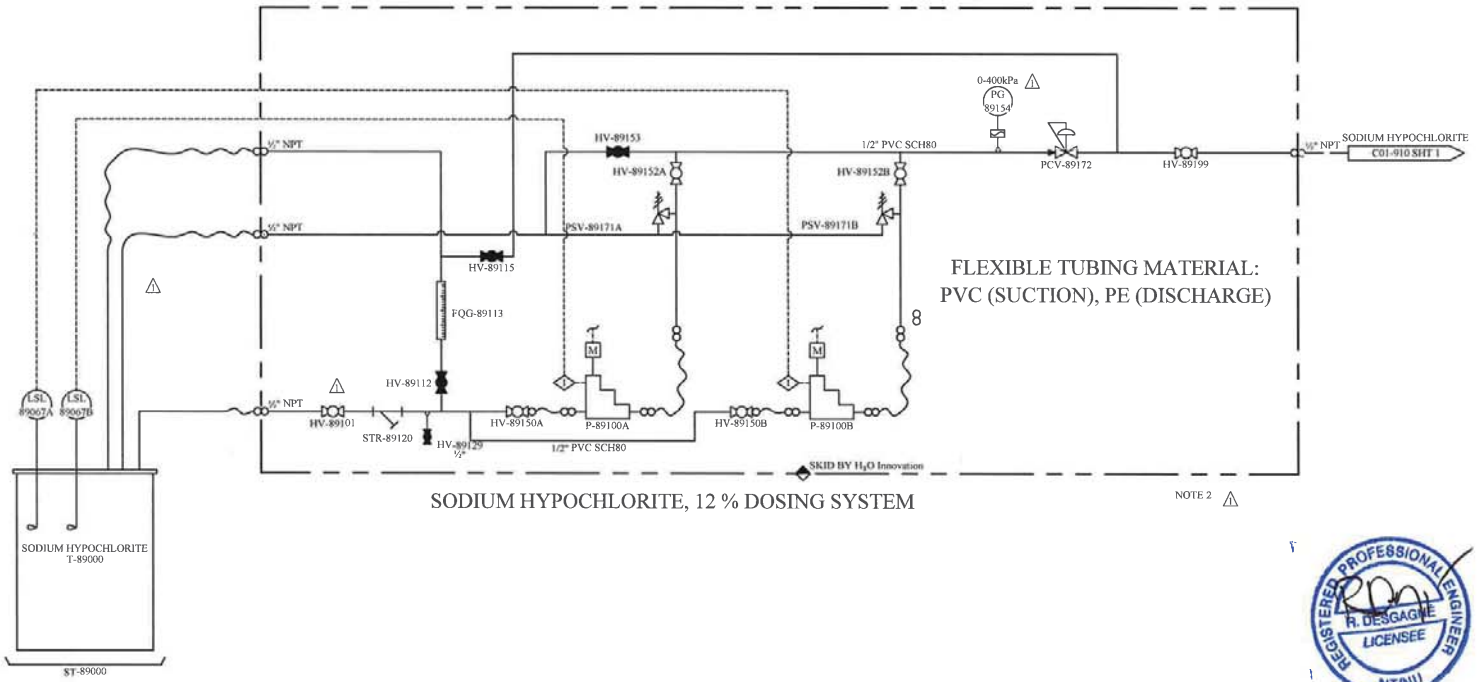

SODIUM HYPOCHLORITE, 12 % DOSING SYSTEM

NOTE 2 ⚠

REGISTERED PROFESSIONAL ENGINEER
R. DESGAGNÉ
LICENSEE
NTNU
28/09/2016

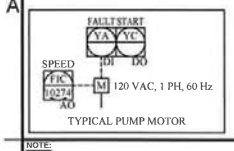

TYPICAL PUMP MOTOR

NOTES:

1. ALL SIGNALS GOING INTO MCP-101.
2. EQUIPEMENT TO BE PLACED IN CONTAINER #1. ⚠

NOTE:
THE INFORMATION, SPECIFICATIONS AND DATA SHOWN ON THIS PRINT ARE FURNISHED BY AND ARE TO REMAIN THE PROPERTY OF H_2O INNOVATION.

THE PURPOSE OF THIS DOCUMENT IS TO FACILITATE THE INSTALLATION, MAINTENANCE AND OPERATION OF THE EQUIPMENT REPRESENTED BY SAID PRINT. NO OTHER USE OF THIS DOCUMENT SHALL BE MADE WITHOUT EXPRESS WRITTEN CONSENT FROM H_2O INNOVATION

DRAWING REVISION

REV	DATE	REVISION DESCRIPTION	DRAWN	CHKD	ENG	APPVD
03	09/08/2016	AS BUILT	M.P.	S.B.	R.D.	A.M.
02	25/07/2016	REVISED AS PER COMMENTS	M.P.	S.B.	R.D.	A.M.
01	29/06/2016	AS PER COMMENTS	M.P.	S.B.	R.D.	A.M.
00	13/06/2016	INITIAL RELEASE	M.P.	S.B.	R.D.	A.M.

h2O innovation
knowledge to share du savoir à partager

UNLESS NOTED OTHERWISE
INTERPRETATION AND FITS
TOLERANCES
FRACTIONS ±1/64
DECIMALS X.X ±0.020
X.XX ±0.010
X.XXX ±0.005
ANGLES ±1°
HOLE SIZES ±1/64
HOLE CENTERS ±1/64
DO NOT SCALE PRINTS

MELIADINE

WTP CONTAINERIZED UNIT

TITLE:
DOSING SKIDS - DUPLEX SOLENOID
PROCESS & INSTRUMENTATION DIAGRAM

SCALE:	DRAWING NUMBER:	REVISION
N/A	P65873-C01-0800	03

SHEET: 1 of 1

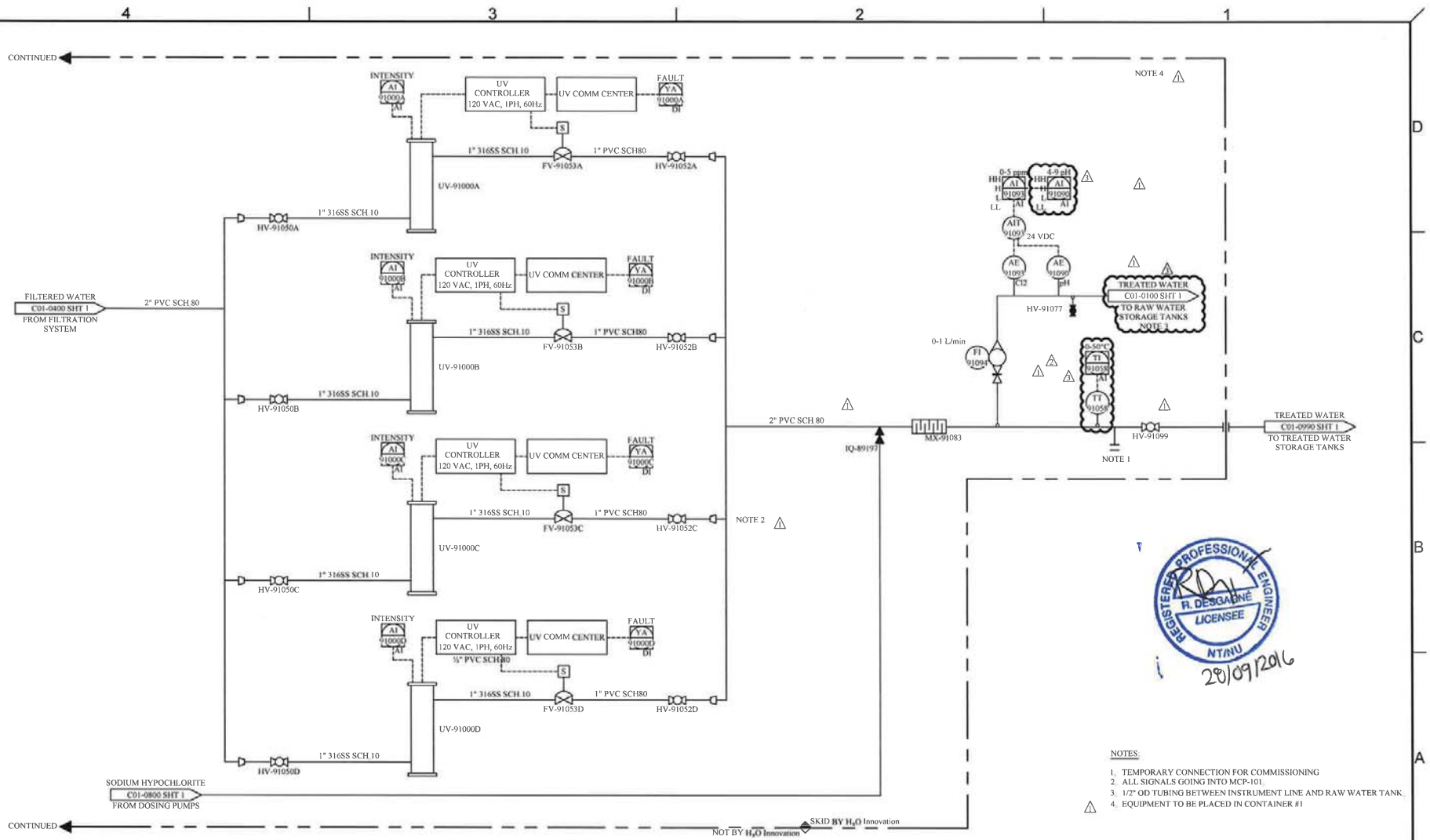

REGISTERED PROFESSIONAL ENGINEER
R. DESGAGNÉ
LICENSEE
NT/NU
20/09/2016

NOTES:

1. TEMPORARY CONNECTION FOR COMMISSIONING
2. ALL SIGNALS GOING INTO MCP-101
3. 1/2" OD TUBING BETWEEN INSTRUMENT LINE AND RAW WATER TANK
4. EQUIPMENT TO BE PLACED IN CONTAINER #1

NOTE:
THE INFORMATION, SPECIFICATIONS AND DATA SHOWN ON THIS PRINT ARE FURNISHED BY AND ARE TO REMAIN THE PROPERTY OF H_2O INNOVATION.

THE PURPOSE OF THIS DOCUMENT IS TO FACILITATE THE INSTALLATION, MAINTENANCE AND OPERATION OF THE EQUIPMENT REPRESENTED BY SAID PRINT. NO OTHER USE OF THIS DOCUMENT SHALL BE MADE WITHOUT EXPRESS WRITTEN CONSENT FROM H_2O INNOVATION.

DRAWING REVISION

REV	DATE	REVISION DESCRIPTION	DRAWN	CHKD	ENG	APPVD
03	09/08/2016	AS BUILT	M.P.	S.B.	R.D.	A.M.
02	25/07/2016	REVISED AS PER COMMENTS	M.P.	S.B.	R.D.	A.M.
01	29/06/2016	AS PER COMMENTS	M.P.	S.B.	R.D.	A.M.
00	13/06/2016	INITIAL RELEASE	M.P.	S.B.	R.D.	A.M.

h2o innovation
Innovation to share du savoir à partager

UNLESS NOTED OTHERWISE
INTERPRETATION ANSI Y14.5
TOLERANCES
FRACTIONS
DECIMALS .X
.XXX
ANGLES
EDGE SIZES
HOLE CENTERS
DO NOT SCALE PRINTS

MELIADINE

WTP CONTAINERIZED UNIT

TITLE:
UV TREATMENT UNITS
PROCESS & INSTRUMENTATION DIAGRAM

SCALE:	DRAWING NUMBER:	REVISION
N/A	P65873-C01-0910 SHEET: 1 of 1	03

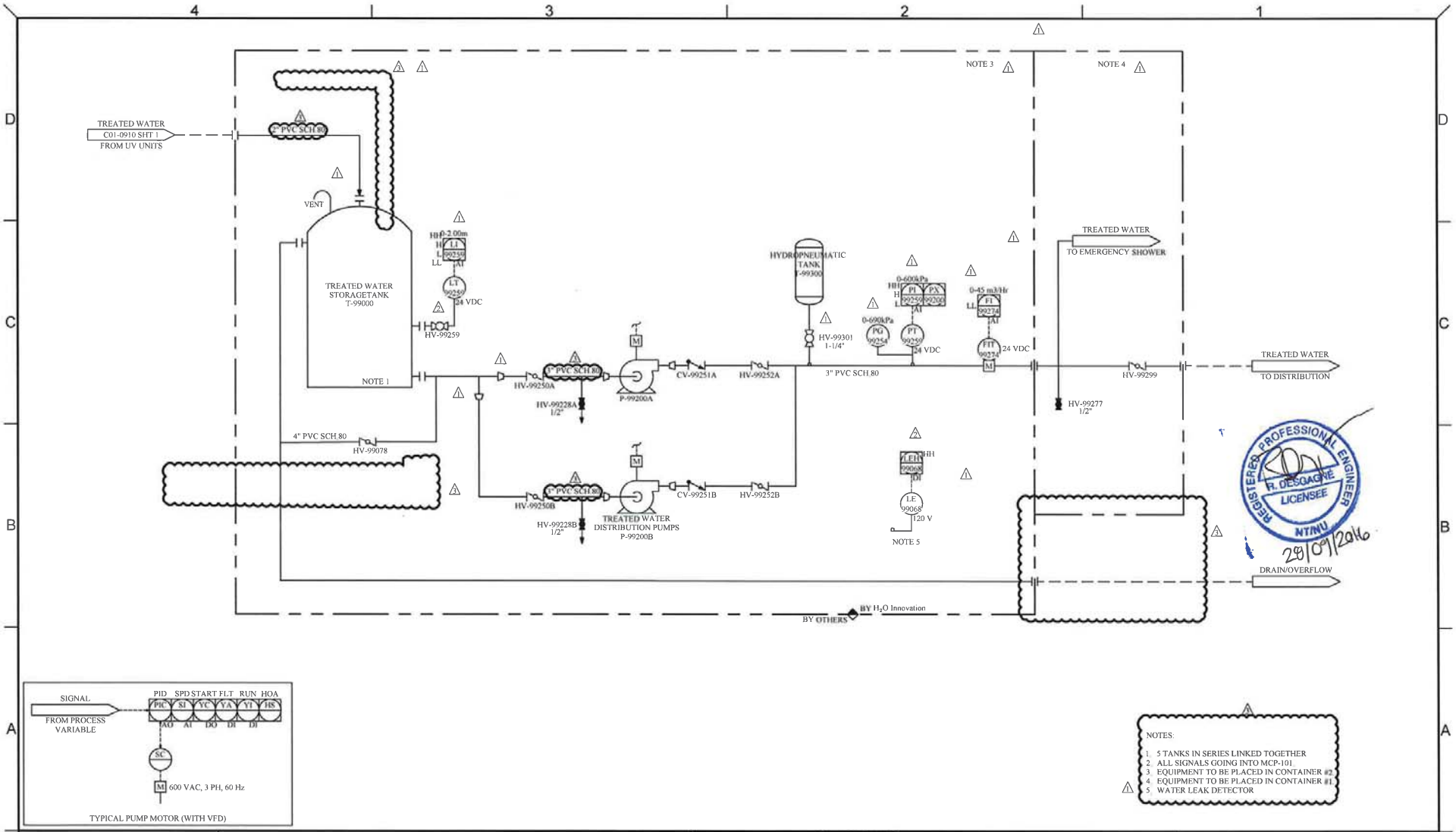

NOTES:

1. 5 TANKS IN SERIES LINKED TOGETHER
2. ALL SIGNALS GOING INTO MCP-101
3. EQUIPMENT TO BE PLACED IN CONTAINER #2
4. EQUIPMENT TO BE PLACED IN CONTAINER #1
5. WATER LEAK DETECTOR

NOTE:
THE INFORMATION, SPECIFICATIONS AND DATA SHOWN ON THIS PRINT ARE FURNISHED BY AND ARE TO REMAIN THE PROPERTY OF H_2O INNOVATION

THE PURPOSE OF THIS DOCUMENT IS TO FACILITATE THE INSTALLATION, MAINTENANCE AND OPERATION OF THE EQUIPMENT REPRESENTED BY SAID PRINT. NO OTHER USE OF THIS DOCUMENT SHALL BE MADE WITHOUT EXPRESS WRITTEN CONSENT FROM H_2O INNOVATION

DRAWING REVISION

REV	DATE	REVISION DESCRIPTION	DRAWN	CHKD	ENG	APPVD
03	09/08/2016	AS BUILT	M.P.	S.B.	R.D.	A.M.
02	25/07/2016	REVISED AS PER COMMENTS	M.P.	S.B.	R.D.	A.M.
01	29/06/2016	AS PER COMMENTS	M.P.	S.B.	R.D.	A.M.
00	13/06/2016	INITIAL RELEASE	M.P.	S.B.	R.D.	A.M.

h2o innovation
knowledge to share, du savoir à partager

UNLESS NOTED OTHERWISE
INTERPRETATION ANSI Y14.5
TOLERANCES
FRACTIONS ±1/16
DECIMALS 0.X ±0.030
0.XX ±0.015
ANGLES ±0.5°
HOLE SIZES ±1/16
HOLE CENTERS ±1/16
DO NOT SCALE PRINTS

MELIADINE

WTP CONTAINERIZED UNIT

TITLE:
TREATED WATER DISTRIBUTION SYSTEM
PROCESS & INSTRUMENTATION DIAGRAM

SCALE: N/A
DRAWING NUMBER: P65873-C01-0990
SHEET: 1 of 1
REVISION 03

Civil Construction Notes
- install sump at location indicated.
- install grating between building fans and outside louvers.
- thermal insulation on walls and ceiling.
- door colour to be the same as building.

Mech/Elec. Construction Notes
- locate cooling thermostat in the warmest location at ceiling level.
- locate heating thermostat at floor level.
- plug and seal (with washers) any holes in the floor to contain water spills.
- maximum width for shipping is 102". this includes all connections that protrude through the sides of the enclosure.

Commissioning Notes
- fan and louver hoods need to be installed on site. cannot ship with hoods attached.
- some flow meters such as rmc meters will be shipped with the unions in the process piping loosened to ensure meters are not damaged during shipment.
- buildings need to be shimmed on site to allow doors to open freely. please have shimming material ready during building installation.
- for buildings in cold weather climates, where the building is elevated, a skirt must be built around the base to prevent the floor from freezing.
- newterra recommends pad be at least 12" larger than enclosure in all directions. local codes may require alternate dimensions.

newterra standard system labels
- flow direction labels
- air line labels
- water line labels
- air/water line labels
- hot surface label (lines >= 140 degf)
- hearing protection labels
- warning label: this machine is automatically controlled
- arc flash warning label

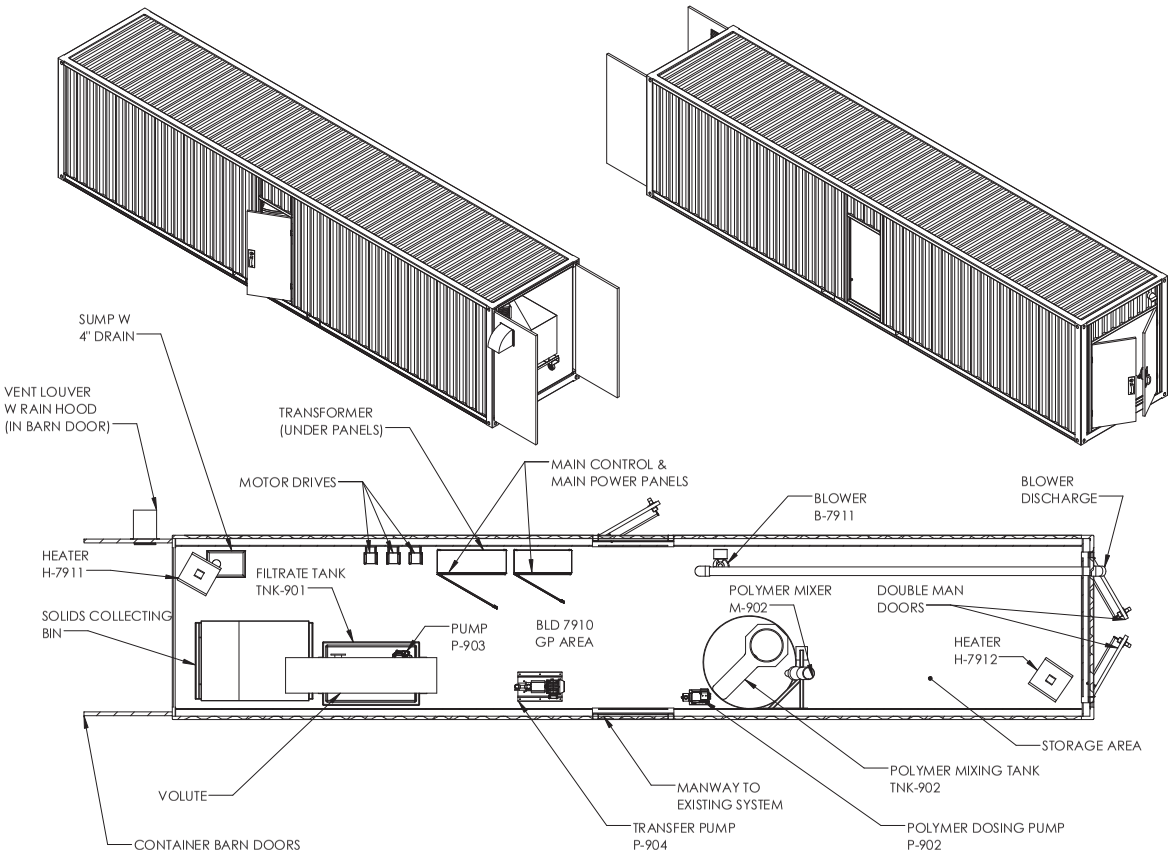

	newterra	GENERAL TOLERANCES .XX ± 1/8" .XXX ± 1/16" UNLESS OTHERWISE SPECIFIED DIMENSIONS ARE IN INCHES	STATUS: As Built					DRAWING TITLE: System Layout	DRAWING NUMBER: -
			LEVEL: C-01	REVISED BY: NM	REVISED ON: 28/8/2019	APPROVED BY:	APPROVED ON:	PROJECT TITLE: Agnico Eagle Volute	PROJECT NUMBER: 1905884
			THIS INFORMATION IS THE PROPERTY OF newterra AND CANNOT BE REUSED OR REPRODUCED WITHOUT WRITTEN CONSENT.					CUSTOMER: Agnico Eagle Mines Limited	DRAWN BY: NM
									DATE: Jul 30, 2019
									SHEET 1 OF 1

VALVES AND PIPING

	NO	NC
BALL VALVE		
GATE VALVE		
GLOBE VALVE		
NEEDLE VALVE		
SLIDE VALVE		
SOLENOID VALVE		
BUTTERFLY VALVE		
SWING CHECK VALVE		
WAFER CHECK VALVE		
SPRING CHECK VALVE		
WYE STRAINER		
SAMPLE PORT		
PRESSURE RELIEF VALVE		
VACUUM RELIEF VALVE		
CAMLOCK CONNECTION		
FLEXIBLE CONNECTION		
FLANGED CONNECTION		
REDUCER		
UNION		
ADSORBENT FILTER		
COALESCING FILTER		
PARTICULATE FILTER		
FILTER, SILENCER		
PRESSURE REGULATOR		
REGULATOR W/ FILTER		

EQUIPEMENT

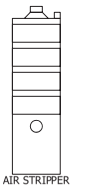
AIR STRIPPER

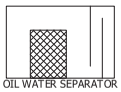
OIL WATER SEPARATOR

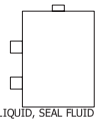
VAPOR/LIQUID, SEAL FLUID SEPARATOR

BAG FILTER

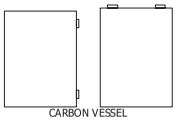
CARBON VESSEL

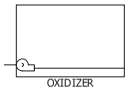
OXIDIZER

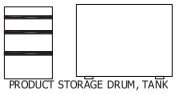
PRODUCT STORAGE DRUM, TANK

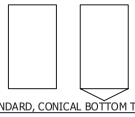
STANDARD, CONICAL BOTTOM TANK

EQUIPEMENT

CLOSED TOP TANK

OPEN TOP TANK

OPEN TOP TANK WITH LID

AIR DIFFUSER ASSEMBLY

STRAINER/FILTER

MEMBRANE CASSETTE

NO CLOG SPRAYER ASSEMBLY

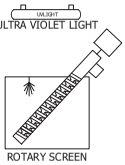

ULTRA VIOLET LIGHT

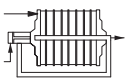
ROTARY SCREEN

FILTER PRESS

EQUIPEMENT

CENTRIFUGAL PUMP	
PROGRESSIVE-CAVITY PUMP	
CHEMICAL-INJECTION PUMP	
CENTRIFUGAL, REGENERATIVE BLOWER	
POSITIVE-DISPLACEMENT BLOWER	
ROTARY-CLAW BLOWER	
LINEAR BLOWER	
LIQUID-RING PUMP	
ROTARY-VANE COMPRESSOR	
RECIPROCATING COMPRESSOR	
PASSIVE COOLING FINS	
HEAT EXCHANGER	
EDUCTOR	
MAGNETIC FLOWM METER	
AVERAGING PITOT TUBE	
VENTURI	
ROTOMETER	
WATER FLOW METER	

INSTRUMENTATION IDENTIFIERS

	FIRST LETTERS		SUCCEEDING LETTERS		
	MEASURED/INITIATING VARIABLE	VARIABLE MODIFIER	READOUT/PASSIVE FUNCTION	OUTPUT/ACTIVE FUNCTION	FUNCTION MODIFIER
A	ANALYSIS		ALARM		
B	BURNER, COMBUSTION				
C	CYCLE	CONTROL		CONTROL	CLOSE
D		DIFFERENCE, DIFFERENTIAL			DEVIATION
E	VOLTAGE		SENSOR, PRIMARY ELEMENT		
F	FLOW, FLOW RATE	RATIO			
G	GAS (LEL)		GLASS, GAUGE, VIEWING DEVICE		
H	HAND			HAND	HIGH
I	CURRENT		INDICATE		
J	POWER		SCAN		
K	TIME, SCHEDULE	TIME RATE OF CHANGE		CONTROL STATION	
L	LEVEL		LIGHT		LOW
M	MONITOR			MOTORIZED	MIDDLE, INTERMED
N					
O			ORIFICE, RESTRICTION		OPEN
P	PRESSURE		POINT(TESTCONNECN)	PNEUMATIC	
Q	QUANTITY	INTEGRATE, TOTALIZE	INTEGRATE TOTALIZE		
R	RADIATION		RECORD		RUN
S	SPEED, FREQUENCY	SAFETY		SWITCH, SOLENOID	STOP
T	TEMPERATURE			TRANSMIT	
U	MULTIVARIABLE		MULTIFUNCTION	MULTIFUNCTION	
V	VIBRATION, MECHANICAL ANALYSIS, VACUUM			VALVE, DAMPER, LOUVER	
W	WEIGHT, FORCE		WELL, PROBE		
X	UNCLASSIFIED	X-AXIS	ACCESSORY DEVICES, UNCLASSIFIED	UNCLASSIFIED	UNCLASSIFIED
Y	EVENT, STATE, PRESENCE	Y-AXIS		AUXILIARY DEVICES	
Z	POSITION, DIMENSION	Z-AXIS, SAFETY INSTRUMENTED SYSTEM		DRIVER, ACTUATOR, UNCLASSIFIED FINAL CONTROL ELEMENT	

- INDICATING INSTRUMENT
- DIGITAL INPUT TO CONTROL PANEL
- DIGITAL INPUT CAUSING ALARM
- DIGITAL INPUT CAUSING SYSTEM SHUTDOWN ALARM
- ANALOG INPUT TO CONTROL PANEL
- ANALOG OUTPUT FROM CONTROL PANEL

VFD - VARIABLE FREQUENCY DRIVE
SWD - SIDE WATER DEPTH
HRT - HYDRAULIC RETENTION TIME
AS - AIR STRIPPER
BLD - BUILDING, TRAILER, OR SKID
FLT - FILTER VELLEL
LPC - LIQUID-PHASE CARBON VESSEL
MFD - MANIFOLD
OWS - OIL/WATER SEPARATOR
OX - OXIDIZER
PST - PRODUCT STORAGE TANK
SOS - SEAL OIL SEPARATOR
SWS - SEAL WATER SEPARATOR
TNK - TANK
VLS - VAPOR/LIQUID SEPARATOR
VPC - VAPOR-PHASE CARBON VESSEL

NOTES:

newterra
1291 CALIFORNIA AVE.
BROCKVILLE ONTARIO
CANADA K6V 5Y6
PHONE:1-800-420-4056
www.newterra.com

LEVEL	REVISION	DATE (dd/mm/yy)	BY
C0 1	AS BUILT	03/09/2019	jeaton
B0 1	FOR PRODUCTION	02/08/2019	jeaton
A0 1	FOR CUSTOMER REVIEW	30/07/2019	jeaton

PROJ. NO: 1905884
TITLE AND LOCATION: LEGEND
CUSTOMER: Agnico Eagle Mines Agnico Eagle Volute
SCALE: NTS | SHEET: 6 | SHEETS: 3

THIS INFORMATION IS THE PROPERTY OF newterra ltd. AND CANNOT BE REUSED OR REPRODUCED WITHOUT THE WRITTEN CONSENT OF newterra ltd.

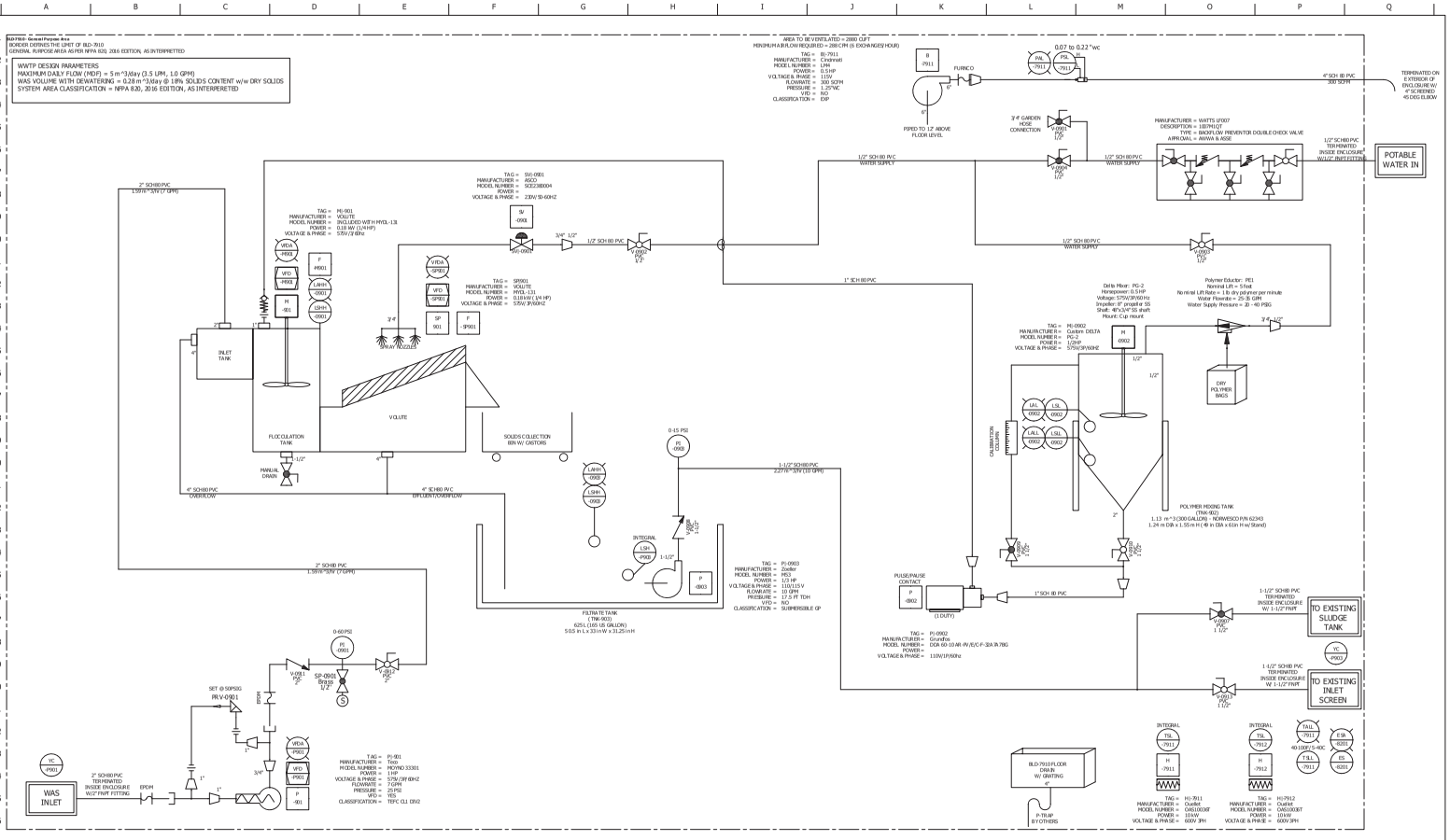

NOTES:
- Water flow meters: Install as per manufactures recommendations. Ensure that throttling valves are not in direct line of the meter.
- Pitot Air flow meters: Provide 8 Dia. of straight pipe before and 3 Dia. of straight pipe after meters. Avoid tees and elbows before and after meters.
- Materials of valves and piping is to be as specified on the diagram.
- There are no special piping requirements outside of newterra's standards unless specified on the diagram.
- Flexible hose is to be as specified on the diagram. If a flexible connection is preferred please consult Engineering to ensure selected hose is rated for the operating conditions.
- Do not use PVC pipe on air lines over 5 PSIG.
- All female PVC threaded adaptors must be re-enforced female adaptors.
- No dissimilar metals are to be in direct contact on water lines. Follow ENG.SOP.010
- All PVC must be schedule 80

newterra
1291 CALIFORNIA AVE.
BROCKVILLE ONTARIO
CANADA K6V 5Y6
PHONE:1-800-420-4056
www.newterra.com

LEVEL	REVISION	DATE (dd/mm/yy)	BY
C01	AS BUILT	03/09/2019	jeaton
B01	FOR PRODUCTION	02/08/2019	jeaton
A01	FOR CUSTOMER REVIEW	30/07/2019	jeaton

PROJ.NO: 1905884
CUSTOMER: Agnico Eagle Mines Agnico Eagle Volute
TITLE AND LOCATION: PROCESS AND INSTRUMENTATION DIAGRAM
SCALE: N TS | SHEET: 2 | SHEETS: 3

THIS INFORMATION IS THE PROPERTY OF newterra ltd. AND CANNOT BE REUSED OR REPRODUCED WITHOUT THE WRITTEN CONSENT OF newterra ltd.

Appendix C: SDS

Material Safety Data Sheet

LA5839
Sodium Hypochlorite 12% Water Treatment

1. CHEMICAL PRODUCT AND COMPANY IDENTIFICATION

Product Id: LA5839
Product Name: Sodium Hypochlorite 12% Water Treatment
Synonyms: Sodium oxychloride; Soda bleach liquor; Javel water; Clorox; Javex.
Chemical Family: Hydrochlorous acid, sodium salt.
Application: Chemical intermediate. Laboratory reagent. Water treatment. Pulp and paper. Bleaching agent. Disinfectant.

Distributed By:
Univar Canada Ltd.
9800 Van Horne Way
Richmond, BC
V6X 1W5

Prepared By: The Environment, Health and Safety Department of Univar Canada Ltd.
Preparation date of MSDS: 03/Apr/2014
Telephone number of preparer: 1-866-686-4827

24-Hour Emergency Telephone Number (CANUTEC): (613) 996-6666

2. HAZARDS IDENTIFICATION

Potential Acute Health Effects:
Eye Contact: Corrosive to eye tissue and may cause severe damage and blindness.
Skin Contact: Corrosive. May cause severe skin irritation. Prolonged contact may lead to burns and blisters and may aggravate dermatitis. May cause whitening or bleaching of the skin.
Inhalation: Corrosive to the respiratory passage. Causes irritation of the mouth, nose and throat. Repeated and/or prolonged exposures may cause productive cough, running nose, bronchopneumonia, pulmonary edema (fluid build-up in lungs) and reduction of pulmonary function. If mixed with acids or warmed to temperatures greater than 40 °Celsius, Sodium hypochlorite solutions release chlorine gas. This gas can cause severe irritation of the nose and throat. Exposures to high levels of chlorine gas may result in severe lung damage.
Ingestion: Corrosive. Causes burns to the mouth, throat and stomach. Causes vomiting, nausea, and diarrhea. Coma, shock and death may occur.

3. COMPOSITION/INFORMATION ON INGREDIENTS

Ingredients	Percentage (W/W)	LD50s and LC50s Route & Species:
Water 7732-18-5	60-100	Oral LD50 (Rat) >90 mL/kg
Sodium Hypochlorite, Solution 7681-52-9	10-30	Oral LD50 Rat = 8200 mg/kg Dermal LD50 Rabbit > 10000 mg/kg

Note: Drug Identification Number (DIN) - 02265729

4. FIRST AID MEASURES

Eye Contact: Wash eyes with water for a minimum of 30 minutes or until no evidence of the chemical remains. Hold eyelids open during flushing. Seek immediate medical attention.
Skin Contact: In case of contact, immediately flush skin with plenty of water for at least 30 minutes. Get medical attention.
Inhalation: Remove person to fresh air. If not breathing, give artificial respiration. If breathing is difficult, get immediate medical attention.
Ingestion: Rinse mouth with water. Do not induce vomiting. Do not give anything by mouth to an unconscious person. If vomiting occurs spontaneously, keep head below hips to prevent aspiration of liquid into the lungs. Seek immediate medical attention.
Notes to Physician: Due to the severely irritating or corrosive nature of the material, swallowing may lead to ulceration and inflammation of the upper alimentary tract with hemorrhage and fluid loss. Also, perforation of the esophagus or stomach may occur, leading to mediastinitis or peritonitis and the resultant complications.

5. FIRE FIGHTING MEASURES

Flash Point: None.
Flash Point Method: Not applicable.
Autoignition Temperature: Not available.
Flammable Limits in Air (%): Not Available.
Extinguishing Media: Use extinguishing media appropriate for surrounding fire.
Special Exposure Hazards: Keep containers cool to prevent rupture and release of material. Closed containers may explode in fire. Spilled material may cause floors and contact surfaces to become slippery.
Hazardous Decomposition/Combustion Materials (under fire conditions): Chlorine. Oxygen. Oxides of sodium.
Special Protective Equipment: Fire fighters should wear full protective clothing, including self-contained breathing equipment.
NFPA RATINGS FOR THIS PRODUCT ARE: Not Available.
HMIS RATINGS FOR THIS PRODUCT ARE: HEALTH 3, FLAMMABILITY 0, REACTIVITY 1

6. ACCIDENTAL RELEASE MEASURES

Personal Precautionary Measures: Wear appropriate protective equipment.
Environmental Precautionary Measures: Prevent entry into sewers or streams, dike if needed. Consult local authorities.
Procedure for Clean Up: Ventilate area. Small spills: soak up with absorbent material and scoop into containers. Large spills : prevent contamination of waterways. Dike and pump into suitable containers. Clean up residual with absorbent material, place in appropriate container and flush with water. Spilled material may cause floors and contact surfaces to become slippery.

7. HANDLING AND STORAGE

Handling: For industrial use only. Handle and open containers with care. Avoid contact with eyes, skin and clothing. Do not ingest. Avoid inhalation of chemical. Empty containers may contain hazardous product residues. Keep the containers closed when not in use. Protect against physical damage. Use appropriate personnel protective equipment. When diluting, add this product to water in small amounts to avoid spattering. Never add water to this material.
Storage: Store in a cool, dry, well ventilated area, away from heat and ignition sources. Store below 29 °C. Do not freeze. Keep away from direct sunlight. Store away from organic chemicals, strong bases, metal powders, carbides, sulfides, and any readily oxidizable material. Storage area should be equipped with corrosion-resistant floors, sumps and should have controlled drainage to a recovery tank. Store in a sealed polyethylene lined container.

8. EXPOSURE CONTROLS/PERSONAL PROTECTION

Engineering Controls:

Local exhaust ventilation as necessary to maintain exposures to within applicable limits. Make up air should always be supplied to balance air exhausted (either generally or locally). Ventilation required when spraying or applying in a confined area. Ventilation should be explosion proof. Eliminate ignition sources.

Respiratory Protection: Wear a NIOAH approved full facepiece respirator for acid gases or a self-contained breathing apparatus for air concentration levels up to 5 ppm. NIOSH approved supplied air respirator when airborne concentrations exceed exposure limits.

Gloves:

Impervious gloves. Neoprene gloves. Nitrile gloves. Rubber gloves.

Skin Protection: Neoprene coated apron or chemical resistant clothing. Impervious boots.

Eyes: Chemical safety goggles and/or full face shield to protect eyes and face, if product is handled such that it could be splashed into eyes.

Other Personal Protection Data: Ensure that eyewash stations and safety showers are proximal to the work-station location.

Ingredients	Exposure Limit - ACGIH	Exposure Limit - OSHA	Immediately Dangerous to Life or Health - IDLH
Water	Not available.	Not available.	Not Available.
Sodium Hypochlorite, Solution	0.5 ppm As For Chlorine.	Not available.	Not Available.

9. PHYSICAL AND CHEMICAL PROPERTIES

Physical State: Liquid
Color: Clear Green to yellow.
Odor: Chlorine.
pH 11.5 - 13
Specific Gravity: 1.175
Boiling Point: Decomposition at 40°C / 104°F
Freezing/Melting Point: -25°C / -12°F
Vapor Pressure: 17.5 mmHg
Vapor Density: Not Available.
% Volatile by Volume: Not Available.
Evaporation Rate: Not Available.
Solubility: Soluble in water.
VOCs: Not Available.
Viscosity: Not Available.
Molecular Weight: Not Available.
Other: Not Available.

10. STABILITY AND REACTIVITY

Chemical Stability: Unstable above 40°C / 104 °F.
Hazardous Polymerization: Will not occur.
Conditions to Avoid: High temperatures. Exposure to light.
Materials to Avoid: Acids. Ammonia. Strong oxidizers. Reducing agents. Metals.
Hazardous Decomposition Products: When heated to decomposition, it emits acrid smoke and irritating fumes. Chlorine. Oxides of sodium. Oxygen.

Additional Information:

Hypochlorites may react with primary amines to form nitrogen trichloride which explodes spontaneously in air. Hypochlorite bleach reacts with urea to form nitrogen trichloride which explodes spontaneously in air. Some metals accelerate the decomposition of Sodium Hypochlorite. Nickel. Copper. Tin. Iron and its alloys. Manganese.

11. TOXICOLOGICAL INFORMATION

Principle Routes of Exposure

Ingestion: Corrosive. Causes burns to the mouth, throat and stomach. Causes vomiting, nausea, and diarrhea. Coma, shock and death may occur.

11. TOXICOLOGICAL INFORMATION

Skin Contact: Corrosive. May cause severe skin irritation. Prolonged contact may lead to burns and blisters and may aggravate dermatitis. May cause whitening or bleaching of the skin.
Inhalation: Corrosive to the respiratory passage. Causes irritation of the mouth, nose and throat. Repeated and/or prolonged exposures may cause productive cough, running nose, bronchopneumonia, pulmonary edema (fluid build-up in lungs) and reduction of pulmonary function. If mixed with acids or warmed to temperatures greater than 40 °Celsius, Sodium hypochlorite solutions release chlorine gas. This gas can cause severe irritation of the nose and throat. Exposures to high levels of chlorine gas may result in severe lung damage.
Eye Contact: Corrosive to eye tissue and may cause severe damage and blindness.

Additional Information: Aspiration may cause lung damage. Corrosive effects on the skin and eyes may be delayed, and damage may occur without the sensation or onset of pain.
Acute Test of Product:
Acute Oral LD50: Not Available.
Acute Dermal LD50: Not Available.
Acute Inhalation LC50: Not Available.

Carcinogenicity:

Ingredients	IARC - Carcinogens	ACGIH - Carcinogens
Water	Not listed.	Not listed.
Sodium Hypochlorite, Solution	Group 3	Not listed.

Carcinogenicity Comment: No additional information available.

Reproductive Toxicity/ Teratogenicity/ Embryotoxicity/ Mutagenicity: Not Available.

12. ECOLOGICAL INFORMATION

Ecotoxicological Information:

Ingredients	Ecotoxicity - Fish Species Data	Acute Crustaceans Toxicity:	Ecotoxicity - Freshwater Algae Data
Water	Not Available.	Not Available.	Not Available.
Sodium Hypochlorite, Solution	0.03 - 0.19 mg/L LC50 (Oncorhynchus mykiss) 96 h semi-static 0.05 - 0.771 mg/L LC50 (Oncorhynchus mykiss) 96 h flow-through 0.06 - 0.11 mg/L LC50 (Pimephales promelas) 96 h flow-through 0.18 - 0.22 mg/L LC50 (Oncorhynchus mykiss) 96 h static 0.28 - 1 mg/L LC50 (Lepomis macrochirus) 96 h flow-through 0.4 - 0.8 mg/L LC50 (Lepomis macrochirus) 96 h static 4.5 - 7.6 mg/L LC50 (Pimephales promelas) 96 h static	Not Available.	0.095 mg/L EC50 Skeletonema costatum 24 h

Other Information:
Harmful to aquatic life at low concentrations. Toxicity is primarily associated with pH.

13. DISPOSAL CONSIDERATIONS

Disposal of Waste Method: Disposal of all wastes must be done in accordance with municipal, provincial and federal regulations.
Contaminated Packaging: Empty containers should be recycled or disposed of through an approved waste management facility.

14. TRANSPORT INFORMATION

DOT (U.S.):
DOT Shipping Name: HYPOCHLORITE SOLUTION
DOT Hazardous Class 8
DOT UN Number: UN1791
DOT Packing Group: III
DOT Reportable Quantity (lbs): Not Available.
Note: No additional remark.
Marine Pollutant: No.

TDG (Canada):
TDG Shipping Name: HYPOCHLORITE SOLUTION
Hazard Class: 8
UN Number: UN1791
Packing Group: III
Note: No additional remark.
Marine Pollutant: No.

15. REGULATORY INFORMATION

U.S. TSCA Inventory Status: All components of this product are either on the Toxic Substances Control Act (TSCA) Inventory List or exempt.

Canadian DSL Inventory Status: All components of this product are either on the Domestic Substances List (DSL), the Non-Domestic Substances List (NDSL) or exempt.

Note: Not available.

U.S. Regulatory Rules

Ingredients	CERCLA/SARA - Section 302:	SARA (311, 312) Hazard Class:	CERCLA/SARA - Section 313:
Water	Not Listed.	Not Listed.	Not Listed.
Sodium Hypochlorite, Solution	Not Listed.	Listed	Not Listed.

California Proposition 65: Not Listed.
MA Right to Know List: Listed.
New Jersey Right-to-Know List: Listed.
Pennsylvania Right to Know List: Listed.

WHMIS Hazardous Class:
E CORROSIVE MATERIAL

16. OTHER INFORMATION

Additional Information: This product has been classified in accordance with the hazard criteria of the Canadian Controlled Products Regulations (CPR) and the MSDS contains all the information required by the CPR.

Disclaimer: NOTICE TO READER:
Univar, expressly disclaims all express or implied warranties of merchantability and fitness for a particular purpose, with respect to the product or information provided herein, and shall under no circumstances be liable for incidental or consequential damages.

Do not use ingredient information and/or ingredient percentages in this MSDS as a product specification. For product specification information refer to a Product Specification Sheet and/or a Certificate of Analysis. These can be obtained from your local Univar Sales Office.

All information appearing herein is based upon data obtained from the manufacturer and/or recognized technical sources. While the information is believed to be accurate, Univar makes no representations as to its accuracy or sufficiency. Conditions of use are beyond Univar's control and therefore users are responsible to verify this data under their own operating conditions to determine whether the product is suitable for their particular purposes and they assume all risks of their use, handling, and disposal of the product, or from the publication or use of, or reliance upon, information contained herein. This information relates only to the product designated herein, and does not relate to its use in combination with any other material or in any other process.

*****END OF MSDS*****

Material Safety Data Sheet

LA3183
Citric Acid 50% Solution

1. CHEMICAL PRODUCT AND COMPANY IDENTIFICATION

Product Id: LA3183
Product Name: Citric Acid 50% Solution
Synonyms: None
Chemical Family: None Known
Application: Not Available.

Distributed By:
Univar Canada Ltd.
9800 Van Horne Way
Richmond, BC
V6X 1W5

Prepared By: The Environment, Health and Safety Department of Univar Canada Ltd.
Preparation date of MSDS: 04/Feb/2014
Telephone number of preparer: 1-866-686-4827

24-Hour Emergency Telephone Number (CANUTEC): (613) 996-6666

2. HAZARDS IDENTIFICATION

Potential Acute Health Effects:
Eye Contact: Causes eye irritation. Resulting in stinging, reddening, tearing and swelling.
Skin Contact: Causes skin irritation. Resulting in stinging, reddening and swelling.
Inhalation: May cause irritation of the respiratory tract.
Ingestion: If large amounts of the product are ingested, symptoms may include gastrointestinal irritation, nausea, vomiting and diarrhea.

3. COMPOSITION/INFORMATION ON INGREDIENTS

Ingredients	Percentage (W/W)	LD50s and LC50s Route & Species:
Water 7732-18-5	Balance	Oral LD50 (Rat) >90 mL/kg
Citric acid 77-92-9	30-60	Not available.

Note: No additional remark.

4. FIRST AID MEASURES

Eye Contact: In case of contact, or suspected contact, immediately flush eyes with plenty of water for at least 15 minutes and get medical attention immediately after flushing.
Skin Contact: In case of contact, immediately flush skin with plenty of water for at least 15 minutes. Get medical attention. Remove contaminated clothing and launder before reuse.
Inhalation: Remove person to fresh air. If not breathing, give artificial respiration. If breathing is difficult, get immediate medical attention.
Ingestion: Do NOT induce vomiting. Never give anything by mouth to an unconscious or convulsing person. Seek immediate medical attention. If vomiting occurs spontaneously, keep head below hips to prevent aspiration of liquid into the lungs.
Notes to Physician: Treat symptomatically.

5. FIRE FIGHTING MEASURES

Flash Point: None.
Flash Point Method: Not applicable.
Autoignition Temperature: Not available.
Flammable Limits in Air (%): Not Available.
Extinguishing Media: Use extinguishing media appropriate for surrounding fire.
Special Exposure Hazards: Not flammable.
Hazardous Decomposition/Combustion Materials (under fire conditions): Not available.
Special Protective Equipment: Not applicable.
NFPA RATINGS FOR THIS PRODUCT ARE: HEALTH 1, FLAMMABILITY 0, INSTABILITY 0
HMIS RATINGS FOR THIS PRODUCT ARE: HEALTH 1, FLAMMABILITY 0, REACTIVITY 0

6. ACCIDENTAL RELEASE MEASURES

Personal Precautionary Measures: Wear appropriate protective equipment.
Environmental Precautionary Measures: Prevent from entering into soil, ditches, sewers, waterways and/or groundwater. Consult local authorities.
Procedure for Clean Up: Isolate hazard area and restrict access. Absorb with an inert dry material and place in an appropriate waste disposal container. Flush area with water to remove trace residue. Collect washings for disposal.

7. HANDLING AND STORAGE

Handling: Avoid breathing mist or vapor. Avoid contact with eyes, skin and clothing. Protect from freezing. Wash thoroughly after handling.
Storage: Store in a dry place away from excessive heat, in original or similar waterproof containers. Keep containers tightly closed. Store between 10°C (50°F) - 60°C (140°F).

8. EXPOSURE CONTROLS/PERSONAL PROTECTION

Engineering Controls:

Local exhaust ventilation as necessary to maintain exposures to within applicable limits.
Respiratory Protection: Not normally required if good ventilation is maintained. Avoid breathing mists or vapors.
Gloves:

Rubber gloves. Vinyl gloves.
Skin Protection: Skin contact should be prevented through the use of suitable protective clothing, gloves and footwear, selected for conditions of use and exposure potential. Consideration must be given both to durability as well as permeation resistance. Wear chemical resistant pants and jackets, preferably butyl or nitrile rubber.
Eyes: Safety glasses with side shields or chemical goggles.
Other Personal Protection Data: Ensure that eyewash stations and safety showers are proximal to the work-station location. Use good personal hygiene practices. Wash hands before eating, drinking, smoking, or using toilet facilities.

Ingredients	Exposure Limit - ACGIH	Exposure Limit - OSHA	Immediately Dangerous to Life or Health - IDLH
Water	Not available.	Not available.	Not Available.
Citric acid	Not available.	Not available.	Not Available.

9. PHYSICAL AND CHEMICAL PROPERTIES

Physical State: Liquid
Color: Clear Colorless
Odor: Essentially odorless to very slight sugar odor.
pH Not Available.
Specific Gravity: 1.24
Boiling Point: 104°C /219°F
Freezing/Melting Point: Not Available.
Vapor Pressure: 16 mmHg
Vapor Density: 0.62
% Volatile by Volume: 50%
Evaporation Rate: <1
Solubility: Completely miscible.
VOCs: Not Available.
Viscosity: Not Available.
Molecular Weight: 192.13
Other: Not Available.

10. STABILITY AND REACTIVITY

Chemical Stability: Stable.
Hazardous Polymerization: Will not occur.
Conditions to Avoid: None known.
Materials to Avoid: Carbon. Caustics.
Hazardous Decomposition Products: None known
Additional Information:

Solutions are mildly corrosive to carbon steel.

11. TOXICOLOGICAL INFORMATION

Principle Routes of Exposure

Ingestion: If large amounts of the product are ingested, symptoms may include gastrointestinal irritation, nausea, vomiting and diarrhea.
Skin Contact: Causes skin irritation. Resulting in stinging, reddening and swelling.
Inhalation: May cause irritation of the respiratory tract.
Eye Contact: Causes eye irritation. Resulting in stinging, reddening, tearing and swelling.

Additional Information: Pre-existing eye and skin disorders may be aggravated by exposure to this product.

Acute Test of Product:
Acute Oral LD50: Not Available.
Acute Dermal LD50: Not Available.
Acute Inhalation LC50: Not Available.

Carcinogenicity:

Ingredients	IARC - Carcinogens	ACGIH - Carcinogens
Water	Not listed.	Not listed.
Citric acid	Not listed.	Not listed.

Carcinogenicity Comment: No additional information available.

Reproductive Toxicity/ Teratogenicity/ Embryotoxicity/ Mutagenicity: Not Available.

12. ECOLOGICAL INFORMATION

Ecotoxicological Information:

Ingredients	Ecotoxicity - Fish Species Data	Acute Crustaceans Toxicity:	Ecotoxicity - Freshwater Algae Data
Water	Not Available.	Not Available.	Not Available.
Citric acid	LC50/96h/goldfish : 440-706 mg/l	Not Available.	Not Available.

Other Information:
No additional remark.

13. DISPOSAL CONSIDERATIONS

Disposal of Waste Method: Disposal of all wastes must be done in accordance with municipal, provincial and federal regulations.
Contaminated Packaging: Empty containers should be recycled or disposed of through an approved waste management facility.

14. TRANSPORT INFORMATION

DOT (U.S.):
DOT Shipping Name: CORROSIVE LIQUID, ACIDIC, ORGANIC, N.O.S. (CITRIC ACID)
DOT Hazardous Class 8
DOT UN Number: UN3265
DOT Packing Group: III
DOT Reportable Quantity (lbs): Not Available.
Note: No additional remark.
Marine Pollutant: No.

TDG (Canada):
TDG Shipping Name: CORROSIVE LIQUID, ACIDIC, ORGANIC, N.O.S. (CITRIC ACID)
Hazard Class: 8
UN Number: UN3265
Packing Group: III
Note: No additional remark.
Marine Pollutant: No.

15. REGULATORY INFORMATION

U.S. TSCA Inventory Status: All components of this product are either on the Toxic Substances Control Act (TSCA) Inventory List or exempt.

Canadian DSL Inventory Status: All components of this product are either on the Domestic Substances List (DSL), the Non-Domestic Substances List (NDSL) or exempt.

Note: Not available.

U.S. Regulatory Rules

Ingredients	CERCLA/SARA - Section 302:	SARA (311, 312) Hazard Class:	CERCLA/SARA - Section 313:
Water	Not Listed.	Not Listed.	Not Listed.
Citric acid	Not Listed.	Not Listed.	Not Listed.

California Proposition 65: Not Listed.
MA Right to Know List: Not Listed.
New Jersey Right-to-Know List: Not Listed.
Pennsylvania Right to Know List: Not Listed.

WHMIS Hazardous Class:
E CORROSIVE MATERIAL

16. OTHER INFORMATION

Additional Information: This product has been classified in accordance with the hazard criteria of the Canadian Controlled Products Regulations (CPR) and the MSDS contains all the information required by the CPR.

Disclaimer: NOTICE TO READER:
Univar, expressly disclaims all express or implied warranties of merchantability and fitness for a particular purpose, with respect to the product or information provided herein, and shall under no circumstances be liable for incidental or consequential damages.

Do not use ingredient information and/or ingredient percentages in this MSDS as a product specification. For product specification information refer to a Product Specification Sheet and/or a Certificate of Analysis. These can be obtained from your local Univar Sales Office.

All information appearing herein is based upon data obtained from the manufacturer and/or recognized technical sources. While the information is believed to be accurate, Univar makes no representations as to its accuracy or sufficiency. Conditions of use are beyond Univar's control and therefore users are responsible to verify this data under their own operating conditions to determine whether the product is suitable for their particular purposes and they assume all risks of their use, handling, and disposal of the product, or from the publication or use of, or reliance upon, information contained herein. This information relates only to the product designated herein, and does not relate to its use in combination with any other material or in any other process.

*****END OF MSDS*****

SAFETY DATA SHEET

1. Identification

Product identifier	**Hydrex 3613**
Other means of identification	None.
Recommended use	Potable Water Flocculant
Recommended restrictions	PROFESSIONAL USE ONLY

Manufacturer/Importer/Supplier/Distributor information

Supplier	Veolia Water Technologies Canada Inc.
Address	2000 Argentia Road, Plaza IV, Suite 430 Mississauga, ON L5N 1W1 Canada
Contact Person	Hydrex Product Specialist
Telephone	(905) 286-4846
Fax	(905) 286-0488
e-mail	vwtcanada-hydrex@veolia.com
24-Hour Emergency telephone	+1-760-476-3962 (Code:333239)
Supplier	Not available.

2. Hazard(s) identification

Physical hazards	Not classified.
Health hazards	Not classified.
Environmental hazards	Not classified.

Label elements

Hazard symbol	None.
Signal word	None.
Hazard statement	The mixture does not meet the criteria for classification.
Precautionary statement	
Prevention	Observe good industrial hygiene practices.
Response	Wash hands after handling.
Storage	Store in cool place. Protect from sunlight. Store away from incompatible materials.
Disposal	Dispose of contents/container to an appropriate treatment and disposal facility in accordance with applicable laws and regulations, and product characteristics at time of disposal.
Other hazards	None known.
Supplemental information	None.

3. Composition/information on ingredients

Mixtures

Chemical name	Common name and synonyms	CAS number	%
ADIPIC ACID		124-04-9	1 - < 3
Other components below reportable levels			90 - 100

All concentrations are in percent by weight unless ingredient is a gas. Gas concentrations are in percent by volume.

4. First-aid measures

Inhalation	Move to fresh air. Call a physician if symptoms develop or persist.
Skin contact	Wash off with soap and water. Get medical attention if irritation develops and persists.
Eye contact	Do not rub eyes. Rinse with water. Get medical attention if irritation develops and persists.
Ingestion	Rinse mouth. Get medical attention if symptoms occur.

Most important symptoms/effects, acute and delayed	Dusts may irritate the respiratory tract, skin and eyes.
Indication of immediate medical attention and special treatment needed	Treat symptomatically.
General information	Ensure that medical personnel are aware of the material(s) involved, and take precautions to protect themselves.

5. Fire-fighting measures

Suitable extinguishing media	Water fog. Foam. Dry chemical powder. Carbon dioxide (CO2).
Unsuitable extinguishing media	Not available.
Specific hazards arising from the chemical	Material can be slippery when wet. During fire, gases hazardous to health may be formed.
Special protective equipment and precautions for firefighters	Self-contained breathing apparatus and full protective clothing must be worn in case of fire.
Fire fighting equipment/instructions	Use water spray to cool unopened containers.
Specific methods	Use standard firefighting procedures and consider the hazards of other involved materials.
General fire hazards	No unusual fire or explosion hazards noted.

6. Accidental release measures

Personal precautions, protective equipment and emergency procedures	Keep unnecessary personnel away. Wear appropriate protective equipment and clothing during clean-up. For personal protection, see section 8 of the SDS. Slippery when wet.
Methods and materials for containment and cleaning up	Avoid the generation of dusts during clean-up. Collect dust using a vacuum cleaner equipped with HEPA filter. Stop the flow of material, if this is without risk. Large Spills: Wet down with water and dike for later disposal. Shovel the material into waste container. Following product recovery, flush area with water. Small Spills: Sweep up or vacuum up spillage and collect in suitable container for disposal. For waste disposal, see section 13 of the SDS.
Environmental precautions	Avoid discharge into drains, water courses or onto the ground.

7. Handling and storage

Precautions for safe handling	Minimize dust generation and accumulation. Provide appropriate exhaust ventilation at places where dust is formed. Material can be slippery when wet. Practice good housekeeping.
Conditions for safe storage, including any incompatibilities	Store in original tightly closed container. Store in a well-ventilated place. Store away from incompatible materials (see Section 10 of the SDS).

8. Exposure controls/personal protection

Occupational exposure limits	No exposure limits noted for ingredient(s).
Biological limit values	No biological exposure limits noted for the ingredient(s).
Appropriate engineering controls	If material is ground, cut, or used in any operation which may generate dusts, use appropriate local exhaust ventilation to keep exposures below the recommended exposure limits.

Individual protection measures, such as personal protective equipment

Eye/face protection	Wear safety glasses with side shields (or goggles) and a face shield. Chemical goggles and face shield are recommended. Before any handling, wear protective glasses side-shields complying with the NF EN 166.
Skin protection	
Hand protection	Chemical resistant gloves.
Other	Wear suitable protective clothing. Chemical resistant gloves.
Respiratory protection	Wear respirator with dust filter.
Thermal hazards	Wear appropriate thermal protective clothing, when necessary.

General hygiene considerations	Always observe good personal hygiene measures, such as washing after handling the material and before eating, drinking, and/or smoking. Routinely wash work clothing and protective equipment to remove contaminants.

9. Physical and chemical properties

Appearance	Granular or Powder.
Physical state	Solid.
Form	Powder.
Color	Off-white.
Odor	Not available.
Odor threshold	Not available.
pH	Not available.
Melting point/freezing point	Not available.
Initial boiling point and boiling range	Not available.
Flash point	Not available.
Evaporation rate	Not available.
Flammability (solid, gas)	Not available.
Upper/lower flammability or explosive limits	
Flammability limit - lower (%)	Not available.
Flammability limit - upper (%)	Not available.
Explosive limit - lower (%)	Not available.
Explosive limit - upper (%)	Not available.
Vapor pressure	Not available.
Vapor density	Not available.
Relative density	Not available.
Solubility(ies)	
Solubility (water)	Not available.
Partition coefficient (n-octanol/water)	Not available.
Auto-ignition temperature	Not available.
Decomposition temperature	Not available.
Viscosity	Not available.
Other information	
Density	0.70 - 0.80 g/cm3
Explosive properties	Not explosive.
Oxidizing properties	Not oxidizing.
pH of 1% Solution	3 - 5

10. Stability and reactivity

Reactivity	The product is stable and non-reactive under normal conditions of use, storage and transport.
Chemical stability	Material is stable under normal conditions. Material is stable under normal conditions.
Possibility of hazardous reactions	Hazardous polymerization does not occur.
Conditions to avoid	Contact with incompatible materials. None under normal conditions.
Incompatible materials	Oxygen.
Hazardous decomposition products	No dangerous reaction known under conditions of normal use. At thermal decomposition temperatures, carbon monoxide and carbon dioxide. Ammonia. Nitrogen oxides (NOx). Hydrogen chloride.

11. Toxicological information

Information on likely routes of exposure

Inhalation	Dust may irritate respiratory system.
Skin contact	Dust or powder may irritate the skin.
Eye contact	Dust may irritate the eyes.
Ingestion	Expected to be a low ingestion hazard.
Symptoms related to the physical, chemical and toxicological characteristics	Dusts may irritate the respiratory tract, skin and eyes.

Information on toxicological effects

Acute toxicity Not known.

Product	Species	Test Results
Hydrex 3613		
Acute		
Oral		
LD50	Rat	> 5000 mg/kg

* Estimates for product may be based on additional component data not shown.

Skin corrosion/irritation	Prolonged skin contact may cause temporary irritation.
Serious eye damage/eye irritation	Direct contact with eyes may cause temporary irritation.
Respiratory or skin sensitization	
Respiratory sensitization	Not a respiratory sensitizer.
Skin sensitization	This product is not expected to cause skin sensitization.
Germ cell mutagenicity	No data available to indicate product or any components present at greater than 0.1% are mutagenic or genotoxic.
Carcinogenicity	Not available.
Reproductive toxicity	This product is not expected to cause reproductive or developmental effects.
Specific target organ toxicity - single exposure	Not classified.
Specific target organ toxicity - repeated exposure	Not classified.
Aspiration hazard	Not an aspiration hazard.
Further information	This product has no known adverse effect on human health.

12. Ecological information

Ecotoxicity The product is not classified as environmentally hazardous. However, this does not exclude the possibility that large or frequent spills can have a harmful or damaging effect on the environment.

Product		Species	Test Results
Hydrex 3613			
Aquatic			
Crustacea	EC50	Daphnia	> 10 mg/l, 48 hr
Fish	LC50	Fish	3880 mg/l, 96 hours estimated

* Estimates for product may be based on additional component data not shown.

Persistence and degradability

Bioaccumulative potential

Mobility in soil	No data available.
Other adverse effects	No other adverse environmental effects (e.g. ozone depletion, photochemical ozone creation potential, endocrine disruption, global warming potential) are expected from this component.

13. Disposal considerations

Disposal instructions	Collect and reclaim or dispose in sealed containers at licensed waste disposal site.
Local disposal regulations	Dispose in accordance with all applicable regulations.
Hazardous waste code	The waste code should be assigned in discussion between the user, the producer and the waste disposal company.
Waste from residues / unused products	Dispose of in accordance with local regulations. Empty containers or liners may retain some product residues. This material and its container must be disposed of in a safe manner (see: Disposal instructions).
Contaminated packaging	Since emptied containers may retain product residue, follow label warnings even after container is emptied. Empty containers should be taken to an approved waste handling site for recycling or disposal.

14. Transport information

TDG

Not regulated as dangerous goods.

IATA

Not regulated as dangerous goods.

IMDG

Not regulated as dangerous goods.

Transport in bulk according to Annex II of MARPOL 73/78 and the IBC Code	Not applicable.

15. Regulatory information

Canadian regulations This product has been classified in accordance with the hazard criteria of the HPR and the SDS contains all the information required by the HPR.

Controlled Drugs and Substances Act

Not regulated.

Export Control List (CEPA 1999, Schedule 3)

Not listed.

Greenhouse Gases

Not listed.

Precursor Control Regulations

Not regulated.

International regulations Additional information is given in the Safety Data Sheet.

Stockholm Convention

Not applicable.

Rotterdam Convention

Not applicable.

Kyoto protocol

Not applicable.

Montreal Protocol

Not applicable.

Basel Convention

Not applicable.

International Inventories

Country(s) or region	Inventory name	On inventory (yes/no)*
Australia	Australian Inventory of Chemical Substances (AICS)	Yes
Canada	Domestic Substances List (DSL)	Yes
Canada	Non-Domestic Substances List (NDSL)	No
China	Inventory of Existing Chemical Substances in China (IECSC)	Yes
Europe	European Inventory of Existing Commercial Chemical Substances (EINECS)	No
Europe	European List of Notified Chemical Substances (ELINCS)	No

Country(s) or region	Inventory name	On inventory (yes/no)*
Japan	Inventory of Existing and New Chemical Substances (ENCS)	Yes
Korea	Existing Chemicals List (ECL)	Yes
New Zealand	New Zealand Inventory	Yes
Philippines	Philippine Inventory of Chemicals and Chemical Substances (PICCS)	Yes
United States & Puerto Rico	Toxic Substances Control Act (TSCA) Inventory	Yes

*A "Yes" indicates that all components of this product comply with the inventory requirements administered by the governing country(s)
A "No" indicates that one or more components of the product are not listed or exempt from listing on the inventory administered by the governing country(s).

16. Other information

Issue date 04-20-2017

Version # 01

Disclaimer Veolia Water Technologies is not able to anticipate all conditions under which this information and its product, or the products of other manufacturers in combination with its product, may be used. It is the user's responsibility to ensure safe conditions for handling, storage and disposal of the product, and to assume liability for loss, injury, damage or expense due to improper use and or non respect of Veolia Water Technologies' requirement.

Revision information Product and Company Identification: Product Review
Hazards Identification: US Hazardous
Composition / Information on Ingredients: Ingredients
Toxicological Information: Toxicological Data
Regulatory Information: United States
GHS: Classification

CONTROLCHEM

Safety Data Sheet

CC 4509 Waste Water Treatment-Powdered Flocculant

SECTION 1. IDENTIFICATION

Product Identifier	CC 4509 Waste Water Treatment-Powdered Flocculant
Manufacturer	Control Chem Canada Ltd., 4460 Harvester Road, Burlington, Ontario, L7L 4X2, 905-319-2234, www.controlchem.com
Emergency Phone No.	CANUTEC, 613-996-6666 (*666 cell)
	Control Chem Canada Ltd., 1-866-882-2436
SDS No.	0716

SECTION 2. HAZARD IDENTIFICATION

Classification

Not classified under any hazard class.

Label Elements

Not applicable

SECTION 3. COMPOSITION/INFORMATION ON INGREDIENTS

Notes

Product components present are either non-hazardous or are not present at levels sufficient to classify product as a health or physical hazard.

SECTION 4. FIRST-AID MEASURES

First-aid Measures

Inhalation

Move to fresh air and avoid breathing product. Get medical advice or attention if you feel unwell or are concerned.

Skin Contact

Wash gently and thoroughly with lukewarm, gently flowing water and mild soap for 5 minutes. Get medical advice or attention if you feel unwell or are concerned.

Eye Contact

Immediately and thoroughly flush eyes and under eyelids with water for 15 minutes. Obtain medical attention immediately if irritation persists.

Ingestion

Rinse mouth with water. Get medical advice or attention if you feel unwell or are concerned.

SECTION 5. FIRE-FIGHTING MEASURES

Extinguishing Media

Suitable Extinguishing Media

Dry chemical, water, carbon dioxide or foam. Use water to keep non-leaking, fire-exposed containers cool.

Unsuitable Extinguishing Media

None known.

Specific Hazards Arising from the Product

This product presents no unusual hazards in a fire situation.
Not known to generate any hazardous decomposition products in a fire. Hydrogen cyanide may be generated in an oxygen deficient atmosphere.

Special Protective Equipment and Precautions for Fire-fighters

Wear full protective equipment including a self-contained breathing apparatus.

SECTION 6. ACCIDENTAL RELEASE MEASURES

Personal Precautions, Protective Equipment, and Emergency Procedures

No special precautions are necessary. Use the personal protective equipment recommended in Section 8 of this safety data sheet.

Environmental Precautions

Do not allow to contaminate water.

Methods and Materials for Containment and Cleaning Up

Collect using shovel/scoop or approved HEPA vacuum and place in a suitable container for disposal. After cleaning, flush away traces with water.

SECTION 7. HANDLING AND STORAGE

Precautions for Safe Handling

Handle in accordance with good industrial hygiene and safety practices. It is good practice to: avoid breathing product; avoid skin and eye contact and wash hands after handling.

Conditions for Safe Storage

Store in a cool, dry, well-ventilated location. Protect from conditions listed in Conditions to Avoid in Section 10 (Stability and Reactivity).

SECTION 8. EXPOSURE CONTROLS/PERSONAL PROTECTION

Appropriate Engineering Controls

The hazard potential of this product is relatively low. General ventilation is usually adequate. Use local exhaust ventilation, if general ventilation is not adequate to control amount in the air.

Individual Protection Measures

Eye/Face Protection

Wear safety goggles or glasses when handling product.

Skin Protection

Wearing gloves when handling is recommended.

Respiratory Protection

Use a NIOSH approved dust mask to control nuisance dust.

SECTION 9. PHYSICAL AND CHEMICAL PROPERTIES

Basic Physical and Chemical Properties

Appearance	White crystalline powder.
Odour	Odourless
Odour Threshold	Not available
pH	Not available
Melting Point/Freezing Point	Not available (melting); Not available (freezing)
Initial Boiling Point/Range	Not applicable
Flash Point	Not available

Evaporation Rate	Not applicable
Flammability (solid, gas)	Not available
Upper/Lower Flammability or Explosive Limit	Not available (upper); Not available (lower)
Vapour Pressure	Not available
Vapour Density (air = 1)	Not available
Relative Density (water = 1)	Not available
Solubility	Moderately soluble in water
Partition Coefficient, n-Octanol/Water (Log Kow)	Not applicable
Auto-ignition Temperature	Not available
Decomposition Temperature	Not available
Viscosity	Not applicable (kinematic)

Other Information

Physical State	Solid
Bulk Density	~ 0.85 kg/m3

SECTION 10. STABILITY AND REACTIVITY

Reactivity

None known.

Chemical Stability

Normally stable.

Possibility of Hazardous Reactions

None known.

Conditions to Avoid

Water, moisture or humidity. Incompatible materials.

Incompatible Materials

Strong oxidizing agents (e.g. perchloric acid).

Hazardous Decomposition Products

Corrosive, flammable ammonia; very toxic carbon monoxide, carbon dioxide; corrosive hydrogen chloride; corrosive, oxidizing nitrogen oxides.

SECTION 11. TOXICOLOGICAL INFORMATION

Skin Corrosion/Irritation

Not a skin irritant.

Serious Eye Damage/Irritation

Not an eye irritant.

STOT (Specific Target Organ Toxicity) - Single Exposure

Inhalation

May cause irritation to the lungs and mucous membranes. Avoid breathing dust.

Skin Absorption

No information was located.

Ingestion

No information was located.

STOT (Specific Target Organ Toxicity) - Repeated Exposure

No information was located.

Respiratory and/or Skin Sensitization

Not known to be a respiratory sensitizer. Not known to be a skin sensitizer.

Carcinogenicity

Not known to cause cancer.

Reproductive Toxicity

Development of Offspring

Not known to harm the unborn child.

Sexual Function and Fertility

Not known to cause effects on sexual function or fertility.

Effects on or via Lactation

No information was located.

Germ Cell Mutagenicity

Not known to be a mutagen.

Other Information

LD50 Oral: Based on Acute Toxicity Estimate (ATE) data, the classification criteria are not met. ATE>2000 mg/kg. LD50 Dermal: Based on Acute Toxicity Estimate (ATE) data, the classification criteria are not met. ATE>2000 mg/kg. LC50 Inhalation: Based on Acute Toxicity Estimate (ATE) data, the classification criteria are not met.

SECTION 12. ECOLOGICAL INFORMATION

Ecotoxicity

No data available.

Persistence and Degradability

Biodegradable by hydrolysis.

Bioaccumulative Potential

This product and its degradation products are not known to bioaccumulate.

Mobility in Soil

If released into the environment, this product can move slowly through the soil.

SECTION 13. DISPOSAL CONSIDERATIONS

Disposal Methods

All disposals must be made in accordance with applicable government regulations only. Under no conditions is any product to be released into the natural environment (ie. air, water, ground).

SECTION 14. TRANSPORT INFORMATION

Not regulated under Canadian TDG regulations.

Special Precautions Not applicable

Transport in Bulk According to Annex II of MARPOL 73/78 and the IBC Code

Not applicable

SECTION 15. REGULATORY INFORMATION

Safety, Health and Environmental Regulations

None known.

SECTION 16. OTHER INFORMATION

SDS Prepared By Quality Assurance Department

Phone No.	905-319-2234
Date of Preparation	October 03, 2017
Date of Last Revision	October 30, 2015
References	Supplier Safety Data Sheet eCHA-European Chemicals Agency cHEMINFO database. Canadian Centre for Occupational Health and Safety (CCOHS). HSDB® database. US National Library of Medicine. Available from Canadian Centre for Occupational Health and Safety (CCOHS).
Disclaimer	THIS SAFETY DATA SHEET IS OFFERED FOR YOUR INFORMATION, CONSIDERATION AND INVESTIGATION, AS REQUIRED BY FEDERAL HAZARDOUS PRODUCTS ACT AND RELATED LEGISLATION. THE INFORMATION IS BELIEVED TO BE ACCURATE, BUT CONTROL CHEM CANADA LTD. PROVIDES NO WARRANTIES, EITHER EXPRESSED OR IMPLIED. THE USER ASSUMES ALL RISK TO PERSONS, PROPERTY AND ENVIRONMENT THROUGH USE OR MISUSE. ALL PRODUCT WARRANTIES ARE LIMITED TO THE REPLACEMENT VALUE OF THE PRODUCT.

Appendix D: H2O innovation OMM

AGNICO EAGLE

Vendor Document Status

1 ☐ Proceed to next submission and status.

2 ☐ Proceed with exceptions as noted to next submission and status.

3 ☐ Do not proceed.
Revise as noted and resubmit next submission and status.

4 ☐ Complete, no further submission required.

By: Date:

Review and authorization to fabricate are only for general conformance with the design concept of the Project as expressed in the Contract Documents. Sole responsibility for the accuracy and completeness of this document, including but not limited to dimensions and quantities, remains with the Supplier/Contractor. Agnico Eagle does not warrant the accuracy or completeness of any of the information contained herein, nor does Agnico Eagle authorize or approve any construction means, methods, techniques, sequences or any safety precautions or procedures.

Agnico Eagle No. 6515-C-250-010-154-MNL-0002 R: Sub001

DOCUMENT FOR INFORMATION

Agnico Eagle Mines Limited
Meliadine Containerized Waste Water Treatment Plant

J04

Operation & Maintenance Manual

U65875–J04–0001

h2O innovation®

Section 1 - Contacting H_2O Innovation 6
Section 2 – System Overview 7
2.1 - Introduction 7
2.2 - Process Description 7
2.2.1 - Screening and Flow Equalization 7
2.2.2 - Aerobic Biological Treatment 8
2.2.3 - Membrane Filtration System 8
2.2.4 - UV Disinfection System 9
2.2.5 - Sludge Handling System 9
2.3 - Design Parameters 9
2.4 - Critical Parameters of Raw Water 11
Section 3 - Pre-Operational Procedures 12
3.1 - Installation Instructions 12
3.1.1 - Introduction 12
3.1.2 - Shipping, Receiving and Storage 13
3.1.3 - Skid and Tank Mounting 13
3.1.4 - Equipment Installation 13
3.1.5 - Valve Installation 14
3.1.6 - Nozzles and Piping 14
3.1.7 - Electrical Installation 16
3.2 - Commissioning 17
3.3 - Calibration and Instrument Care 17
Section 4 - System Configuration 19
Section 5 - Operation Procedures 20
5.1 - Modes of Operation of the System 20
5.2 - Modes of Operation of the Dosing System 21
5.3 - Equalization Pumps Set-up and Automatic Operation 22
5.4 - Return Activated Sludge Flow 22
5.5 - Operating the System 22
5.5.1 - Starting Procedure 23
5.5.2 – Stoping or Restarting the System 23

5.5.3 - Operating Guidelines 23
5.6 - Permeability and Transmembrane Pressure 24
5.7 - Manual Controls 24
Section 6 - System Maintenance Procedures 26
6.1 - Equipment Maintenance 26
6.1.1 - Maintenance Logs 26
6.2 - Working with Rotating Equipment 26
6.3 – Instrument Calibration 27
6.4 – Lubrification of Electric Motors 27
6.5 – Leaking of Mechanical Seals 27
6.6 - Analytical Monitoring 28
6.7 - Membrane Maintenance 28
6.7.1 – Membrane Fouling 28
6.7.2 - Foulants 29
6.7.3 - Cleaning Protocol 30
6.8 - Trouble-Shooting 31
Section 7 - Safety 34
7.1 - Our First Priority – Safety 34
7.2 - Preamble and General Precautions 35
7.3 - Safety Standards 36
7.4 - Personal Protective Equipment (PPE) 36
7.5 - Key Safety Warnings 36
7.6 - Safety Guidelines 40
7.7 - Harmful Gas Safety Procedure 42
7.8 - Material Safety Data Sheets 43
7.8.1 - Sodium Hypochlorite 43
7.8.2 - Citric Acid 50
Section 8 - Controls documentation 56
8.1 - Process Control Narrative 56
8.2 - Alarms List 104
8.3 - I/O List 107
Section 9 - Drawings and Diagrams 112

9.1 - Piping and Instrumentation Diagrams (P&IDs) 112
9.2 - Process Flow Diagrams (PFD) 124
9.3 - General Arrangement Drawings 127
9.4 - Equipment List 141
9.5 - Valve List 145
9.6 - Instrument List 149
9.7 - Spare Parts List 152
9.8 - Electrical Schematics 154
9.9 - Single Line Diagram 190
9.10 - Control Panel Drawings 195
Section 10 - Vendor O&M Data and Manuals 221
10.1 - Index of Tabs 221
10.2 - A1-1 – ABB Pressure Transmitter 222
10.3 - A1-2 – ABB Turbidimeter 275
10.4 - A2 – AMT Gorman Rupp Sewage Pump 320
10.5 - A3 – Asahi Ball Valve 340
10.6 - A4 – Asco Solenoid Valve 362
10.7 - B1 – Burkert Solenoid Valve 367
10.8 - C1-1 – Chemline Ball Float Valve 380
10.9 - C1-2 – Chemline Electric Actuator 383
10.10 - C1-3 – Chemline Needle Valve 403
10.11 - C1-4 – Chemline Pressure Relief Valve 406
10.12 - C1-5 – Chemline Isolated Pressure Gauge 410
10.13 - C1-6 – Chemline Ball Valve 412
10.14 - C1-7 – Chemline Check Valve 416
10.15 - E1-1 – Endress & Hauser Analyzing Transmitter 420
10.16 - E1-2 – Endress & Hauser pH/ORP Sensor 633
10.17 - E1-3 – Endress & Hauser Memosens Cable 646
10.18 - E1-4 – Endress & Hauser Level Transmitter 687
10.19 - E1-5 – Endress & Hauser Dissolved Oxygen Sensor 822
10.20 - E1-6 – Endress & Hauser Pressure Transmitter 867

10.21 - E1-7 – Endress & Hauser Flowmeter 880
10.22 - E2-1 – EDI Fine Bubble Diffuser 909
10.23 - E2-2 – EDI Coarse Bubble Diffuser 932
10.24 - F1 – Flow + Ball Valve 949
10.25 - F2 – Flygt Level Switch 951
10.26 - F3 – FPZ Regenerative Blower 966
10.27 - G1-1 – Georg Fischer Line Strainer 997
10.28 - G1-2 – Georg Fischer Ball Valve 1000
10.29 - G2 – Goulds Sewage Pump 1003
10.30 - H1 – Hydranautics Sumerged Membranes 1015
10.31 - I1-1 – IFM Compressed Air Meter 1054
10.32 - I1-2 – IFM Compressed Air Meter 1083
10.33 - I2 – IPEC Fine Screens 1112
10.34 - L1 – LVC Gate Valve 1174
10.35 - N1 – Neotech Aqua UV Treatment System 1177
10.36 - P1 – Praher Check Valve 1236
10.37 - P2 – Primary Fluid Calibration Column 1239
10.38 - P3 – Prominent Dosing Pump 1242
10.39 - S1-1 – Sharpe Ball Valve 1459
10.40 - S1-2 – Sharpe 3-piece Ball Valve 1461
10.41 - W1 – Wika Pressure Gauge 1464
Section 11 - Appendices 1469
11.1 - Equipment Maintenance Log 1469

SECTION 1 - CONTACTING H_2O INNOVATION

If you need telephone or on-site service support, chemicals, membranes, filters, or spare parts for your system, please contact your H_2O Innovation SP&S Regional Manager. If they are unavailable or to place standard orders the following contact information can be used.

Service in the United States
(763) 566-8961
service.us@h2oinnovation.com

Service in Canada
(418) 688-0170 #321
service.ca@h2oinnovation.com

Should you require EMERGENCY support for anything other than a chemical spill, you can contact our 24-hour hotline at 1-855-H20-SRVC (1-855-426-7782). The number is not routed to a call center, but rather it will ring the cell phone of the service person on-call. While we cannot commit to an immediate answer, our goal is to respond to emergency calls within 2 hours. For emergencies regarding chemical spills, refer to the SDS for the specific chemical.

Please note that the following standard rates may apply (all rates are valid for 2016 calendar year – please contact H_2O Innovation for a current rate sheet if required).

Table 1: Service Rates

Role	Hourly Rate
On-site: Field service technician [1-4]	$125
On-site: Engineer or Programmer [1-4]	$125
Off-site: Field service technician [5]	$125
Off-site: Engineer or Programmer [5]	$125

Notes:
1. Hours in excess of a 10-hour work day will be invoiced at 1.5 x the applicable labor rate.
2. Automobile mileage expenses will be invoiced at $0.56 / mile.
3. Hotel, airfares, flight change fees and related travel expenses will be invoiced at 1.15 times cost.
4. Meals will be invoiced at a per diem rate of $58.50.
5. Including on site visit preparation, travel time, support by telephone or email and report writing time.

SECTION 2 - SYSTEM OVERVIEW

2.1 - INTRODUCTION

This operation and maintenance manual, submitted by H_2O Innovation, is intended for a membrane bioreactor containerized waste water treatment plant. This system consists of the following subsystems:

1. Screening and Flow Equalization
2. Aerobic Biological Treatment
3. Membrane Bioreactor (MBR) Filtration System
4. Ultra-Violet Treatment System
5. Sludge Handling System and Tank

This waste water treatment plant is designed for municipal sewage surface water discharge. The system was based on a maximum daily flow of 216 m^3/day, with a peak hourly flow of 106 m^3/hour. The equalization system is designed for a peak hourly flow lasting no longer than 1 hour over a 24 hour period.

This manual is intended to cover various equipment, instruments and valves that make up the wastewater treatment system and the specifications and design conditions. Equipment that is not part of H_2O Innovation's supply is not covered in this manual. Moreover, it is beyond the scope of this manual to describe the operating processes and control systems that are not provided by H_2O Innovation.

This manual contains drawings of the system, process and instrumentation diagrams, wiring diagrams, maintenance procedures and any other documents necessary for operation. In addition, subsequent parts of this manual contain the necessary technical documents, obtained from manufacturers, to operate specific components and ensure good maintenance procedures.

2.2 - PROCESS DESCRIPTION

2.2.1 - SCREENING AND FLOW EQUALIZATION

Influent wastewater is pumped the two aerated equalization tank. The equalization system is able to manage a variation in flows. It provides raw wastewater storage of up to 50% of the design flow to store feed during high flow periods and to ensure feed supplementation during low flow periods. It provides a stable and consistent raw feed for the downstream processes. Equalized water is pumped via two equalization pumps into a standpipe inside the second tank and flows from that pipe by gravity to the fine screens. The fine screens are rotary drum screens with 2 mm perforated plate openings that operate continuously. The screens will ensure the removal of large trash and debris to protect

downstream equipment. Pressurized wash water is used intermittently to clean the screens and screenings.

2.2.2 - AEROBIC BIOLOGICAL TREATMENT

Screened raw water falls by gravity from the screens into the sump tank, where it is pumped to the aerobic tank, which is located outdoors. Aerobic biological treatment remove the organic load (measured as BOD) of the wastewater. Bacteria grown in the bioreactor remove unwanted organic pollutants to produce a treated water of high quality. Oxygen is supplied by regenerative blowers and is injected by fine bubble diffusers in the tank. The diffusers are designed for a wide range of air flows, according to the system's demand in oxygen. It keeps a dissolved oxygen concentration of at least 2 mg/L at any time to satisfy the needs of the biomass. The mixed liquor suspended solids (MLSS) overflows into a standpipe inside the tank and flows by gravity to the membrane filtration trains.

2.2.3 - MEMBRANE FILTRATION SYSTEM

Membrane filtration is used to separate the bacteria from the water to ensure keeping them in the process at the desired concentration. Activated sludge is returned at a constant flow rate to the aerobic tank to prevent a build-up of sludge in the membrane tank. The return activated sludge (RAS) is pumped at a higher flow rate than the design flow rate of the plant, to make sure that there is good circulation in the whole system and that there is no accumulation of solids.

The membranes chosen for this plant are manufactured by Hydranautics. The HSM450-ES-HSE15 model is totally submerged and has a pore size of 0.4 microns, which remove all suspended solids in the effluent.

Permeation pump are provided to suction the effluent through the membrane modules and transport it to the permeate tank. Permeation pumps are supplied with variable speed drives to overcome any changes in transmembrane pressure and achieve the design flows at all times.

The operating cycle for the selected modules is to suction effluent water for seven minutes and to relax the membrane for one minute. The cycle optimizes the long-term operation of membrane modules. The housings are constructed with an integrated diffuser at bottom to aerate continuously the membrane and prevent clogging and accumulation of sludge. The relaxation of the membranes allows extending the interval between cleanings (CIP or Clean-In-Place). CIP cleans are done about twice a year. Washes are performed with permeate stored the permeate storage tank while a cleaning chemical (either sodium hypochlorite or citric acid) is added. Chemical solutions are reverse flowing through the membranes, which are soaked for a few hours after. After washing, the permeation is restarted. While a train is washing the other train can continue to treat water and ensure a continuous production of effluent.

Once a week, a chemically enhanced backpulse (CEB) should be performed on the membrane modules with sodium hypochlorite to mitigate membrane fouling. Permeate flow is reversed to flow back into the membranes while the cleaning chemical is added inline.

2.2.4 - UV DISINFECTION SYSTEM

From the permeate pumps, each membrane bioreactor train sends permeate through an inline ultraviolet disinfection system. It is a physical process that inactivates instantaneously microorganisms. The UV system process adds no chemicals to the water, and therefore, has no impact on the chemical composition of the effluent. From here, effluent is sent to a common permeate storage tank. The permeate tank acts as a reservoir for treated water that is then pumped to a discharge location. This tank can also be used for CEB and CIP processes, as previously mentioned.

2.2.5 - SLUDGE HANDLING SYSTEM

Since bacteria continue to reproduce as they consume organics and nutrients, the concentration of biomass, measured as MLSS, increases with time. Periodic sludge wasting is required to control the mixed liquor suspended solids (MLSS) concentration in the bioreactor tanks.

Sludge is sent to the sludge storage tank by redirecting the flow of the RAS pump. A blower and coarse bubble diffuser system maintains an aerobic environment within the sludge tank to minimize the proliferation of odours. Periodic settling is used to facilitate the thickening of the waste activated sludge. The supernatant (upper portion of the tank) is sent back to the sump tank by opening a valve, where it will re-enter the treatment process. This operation (called decanting) reduces the volume of sludge that needs to be handled and extends the period of time that the sludge tank can be used before thickened sludge must be disposed of.

2.3 - DESIGN PARAMETERS

The main design parameters and the general configuration of this wastewater treatment system are presented in the tables below. Table 2 presents the flows that were considered for the design.

Table 2: Wastewater Treatment Plant Typical Flows

Typical Flow	Value
Maximum Daily Flow (ADF)	216 m^3/day
Design Flow	216 m^3/day
Peak Hour Flow[1]	106 m^3/hour

Note 1 : The equalization system is designed for a peak hourly flow lasting no longer than 1 hour over a 24-hour period.

Table 3 presents the influent characteristics and the effluents limits.

Table 3 : Influent Characteristics and Effluent Limits

Parameter	Influent Average	Effluent Quality
BOD_5 (Five-day Biochemical Oxygen Demand)	200-360 mg/L	< 25 mg/L
TTS (Total Suspended Solids)	50-350 mg/L	< 25 mg/L
Alkalinity	250-500 mg/L	50 mg/L
TKN (Total Kjeldahl Nitrogen)	45-60 mg/L	-
Ammonia Nitrogen (NH_3-N)	40-50 mg/L	0,89 mg/L
Total Phosphorus	5-12 mg/L	-
E. Coli	-	1000 MPN / 100 mL
pH	6,5-8,5	6-9
Temperature	10-20 °C	-
Fats, Oils and Grease	20-50 mg/L	15 mg/L

Please note that benzene, toluene, ethylbenzene, lead and aluminum are not specifically targeted or removed during the wastewater treatment process and can therefore not be guaranteed.

The design parameters of this system are shown is the following table.

Table 4: Design Parameters of the Waste Water Treatment Plant

Parameter	Value
Number of process trains	1
Number of membrane trains and UV systems in the process train	2
Number of membrane modules per membrane trains	1
Total Membrane Area	900 m^2
Design Flow	206 m^3/d
F:M (Food to Microorganism) Ratio	0.1 kg_{DOB}/kg_{MLSS} per day
Targeted MLSS (Mixed Liquor Suspended Solids) Concentration	< 10 000 mg/L

The membrane filtration and UV disinfection systems operate as two separate trains. Therefore, if maintenance is required for any piece of equipment on one of the trains, the plant can continue to operate on one train treating the full flow for short periods. In the event of very low sewage production, a train can be put offline by draining and flushing the systems and filling the membrane tank with permeate. The membranes must **always** be kept wet once they are commissioned.

2.4 - CRITICAL PARAMETERS OF RAW WATER

This configuration is based on the parameters provided in your application package. If significant changes in the concentrations of raw water cause a need for additional treatment equipment, these will be the customer's expense.

Warning: The system can be damaged if water of a different composition that the one that has been submitted is used. A change in the composition of water may request additional equipment, more frequent washing or other different operating procedures. Please also note that the system performances may vary with the quality of the water influent.

Table 5 shows the critical parameters of raw water that need to be respected at all times to make sure not to affect the integrity of the membrane modules.

Table 5: Critical Parameters of Raw Water

Parameter	Value
Minimum Temperature of Raw Water	5°C
Maximum Temperature of Raw Water	40°C
Feed Water pH Range	6-8
MLSS (Mixed Liquor Suspended Solids) Concentration Range	8 000 – 12 000 mg/L

When properly operated and maintained, the process and equipment designed for this plant adequately addresses the water influent and easily meets the operations specifications. If the feed water is no longer situated in the parameters previously defined due to a change in the quality of the raw water or equipment failure of the unit, you must not operate the equipment and this until the situation is rectified. The situation is restored when the raw water is once again within the operating parameters or if the situation has been evaluated by H_2O Innovation and a discharge is given to continue operations. Continue operations with raw water that exceeds the critical parameters can cause irreversible damage.

SECTION 3 - PRE-OPERATIONAL PROCEDURES

3.1 - INSTALLATION INSTRUCTIONS

3.1.1 - INTRODUCTION

It is expected that the contractor installing this system is familiar with normal construction means and methods for water treatment equipment of this nature and that detailed instructions for installation are not required. Since the installation of the system is outside of H_2O Innovation's scope, the following is provided as general guideline only. Typical construction site safety practices must be followed as a priority. It is critical to review the safety section of this manual before any work begins: Section 7 – Safety.

For each item that is loose shipped with the system, follow the installation instructions included in Section 10 – Vendors O&M Data and Manuals of this manual. This also applies to the membranes provided with the system (if included). When membranes are included, membrane elements need to be protected from drying, freezing and systems must be fully depressurized before loading or unloading membrane elements. Membranes are typically one of the last components to be installed in the plant.

It is not expected that a representative from H_2O Innovation will be on site during the installation phase of the project. Unless special provisions are included in the scope of this project, the H_2O Innovation representative will only come to site once installation has been certified as complete by the contractor.

The following sections provide some general guidelines when it comes to installing the system. Refer to the project drawings (Section 9 – Drawings and Diagrams) for details on how the system is designed and configured. The drawings that the installation contractor will need are included with this manual and are typically piping and instrumentation diagrams (P&IDs), general arrangements (GAs), assembly drawings, and electrical drawings, etc. Drawings provided by the Owner's engineer or other outside firms should also be referred to and discrepancies noted to all affected parties for resolution. Ensure that drawings are red-lined and updated as changes are made in the field. These red-lined drawings must be forwarded to H_2O Innovation before the field service representative comes to site.

Before performing any installation work please read the section in this manual on safety: Section 7 – Safety.

3.1.2 - SHIPPING, RECEIVING AND STORAGE

Equipment will be typically packaged and shipped from one of H_2O Innovation's factories. Drop shipments are also possible for loose ship items. Please discuss timing of shipments with the H_2O project manager so that receipt can be coordinated with other site activities. All shipments must be inspected on arrival for signs of damage or discrepancies with the packing slips. Any noted damage must be photographed immediately and a report sent to H2O Innovation. Typically, ownership of the equipment transfers to the installation contractor at the reception of the equipment on site. Damage that occurs after ownership has transferred will not be the responsibility of H_2O Innovation.

Equipment should be stored on site by the installation contractor in a dark, dry location and secured to prevent theft. Temperature should be controlled to between 5°C and 30°C. Ensure control panel doors are kept closed unless the panel is being worked on. This will help to keep the interior clean. Keep strong electromagnetic radiation sources away from the sensitive electrical equipment that comes in control panels and instrumentation during storage and installation.

If rotating equipment is going to be left on site for extended periods, please inform the H_2O Innovation project manager so that advice on how often to rotate shafts can be provided. Also, electrical connection to specific equipment heaters may be needed to prevent condensation, particularly in motors.

3.1.3 - SKID AND TANK MOUNTING

Supports for skids or loose ship items typically consist of a 4" to 6" concrete housekeeping pad that has been designed by a local structural engineer and installed by the site contractor. Foundations for the pads need to be designed to support the planned, wetted equipment weight. It is also possible that other arrangements have previously been discussed and agreed with H_2O Innovation engineering and are reflected on the project drawings. The net result in either case is that a solid, level surface is required around the entire perimeter of the skid frame, equipment item or tank bottom to provide support for the equipment and dampen vibrations.

Lifting procedures are typically produced by specialized contractors on site. H_2O recommends using spreader bars such that angular loads are not applied to lifting lugs on skid frames and tanks.

Skids and tanks are typically anchored to the mounting surface. Anchors are usually specified by a licensed structural engineer for the specific plant location. Refer to the project submittals and drawings for information on anchorage requirements. Anchors should always be installed according to their installation instructions.

3.1.4 - EQUIPMENT INSTALLATION

Place all major components, such as pumps, blowers, skids and tanks as shown on drawings provided in this manual (9.3– General Arrangement Drawings). Ensure any valves or other components that were removed for shipping are placed in the correct location and fastened.

Major equipment items are often grouted in place. Please refer to specific installation instructions for each item to see if grouting is required (Section 10 – Vendors O&M Data and Manuals). After grouting has been completed and set, align all rotating equipment as described in the installation instructions.

Perform initial startup procedures (vibration checks, bumping) for all rotating equipment as per manufacturer instructions and contractual requirements.

3.1.5 - VALVE INSTALLATION

Butterfly valves should be installed in the partially open position and stroked during the installation process. Please see manufacturer's specific instructions in Section 10 – Vendors O&M Data and Manuals. Mating pipe flanges need to be aligned tangentially and also with an axial gap that agrees with the valve lay length so that no loads are applied to the valve in any direction when it is in place.

Butterfly valves that are installed in lines that could see sediment, solids or two phase flow should be installed such that the valve shaft is horizontal. This allows passage of solids and air.

Ball valves should not be used to support piping loads. Threaded metallic valves should be installed using double pipe wrenches and appropriate sealant on the joints. Orientation is not a concern for ball valves in general. Ensure packing is torqued to the requirements in the vendor information.

3.1.6 - NOZZLES AND PIPING

Interconnecting piping that is not included in H_2O Innovation scope, needs to be supplied by the installation contractor. All piping should be installed according to the drawings provided by both H_2O Innovation and the Owner's Engineer.

Mating piping must not impart a load in any direction to nozzles or other connections on a skid or tank. This means that piping must be fully supported such that if the equipment or skid flange is removed, the piping will remain in its place. Pipe support designs are typically completed and sealed by a structural engineer for the jurisdiction in which the plant is being installed. The engineer should also take dynamic loads due to moving fluids and operating pressure into account in the design of the piping system. Note that PVC piping requires support more often than metallic piping and there are known standards for how often this piping needs to be supported.

Skid and tank drain connections for block and bleed lines, instrument sample drains or general process drains must be designed with an air gap (unless specified otherwise) and sized to accommodate the full expected design flow plus a generous safety margin. Generally speaking, a sloped floor drain should be located in the vicinity of each skid to provide a destination for instrumentation drains and piping maintenance drains. Instrumentation drains should be plumbed into the drain so that slip hazards are not created by water flowing across the floor.

It is expected that the installation contractor will flush all piping before commissioning (this includes factory installed piping. H_2O Innovation recommends that potable water be used for pipe and tank

flushing. Frequent visual inspections during construction can be helpful to remove construction trash and dust that often ends up in piping systems.

Piping is often lined for corrosion protection. This is true of carbon steel pipe and also stainless steel pipe. Stainless steel has a thin chromium oxide layer that provides the inherent corrosion protection. Welding, heating or mishandling any of these piping and fittings can damage the coatings and thus compromise the corrosion protection. Metallic piping that is perpetually wet on the outside due to building ventilation issues (or other HVAC issues) is particularly prone to corrosion. Building ventilation needs to be sized to control condensation inside buildings.

Stainless steel components (not just piping) should not be handled by mild steel equipment (like mild steel forklift tines or chains) as the stainless steel surface can be marred or scratched resulting in the loss of corrosion resistance. Carbon steel can be imbedded in the stainless surface and lead to corrosion. *Keep carbon steel from contacting stainless steel during the installation process and only use tools that are dedicated for use on stainless steel when installing and working with stainless steel.*

Also, if stainless steel is stored outdoors, it should be covered and protected from the blowing dust and sand that is common on construction sites. The surface of the stainless steel can be abraded and damaged when stored outdoors. Also, when grinding or welding near stainless steel, protect the material with guards or ensure that the stainless is thoroughly cleaned, pickled and passivated afterwards (it is possible to use pickle/paste compound, but this method is not suitable for large surfaces or is not a substitute for pickling according to ASTM A380 in an acid bath).

Stainless steel can also be subject to attack by chlorides and sources are common in water treatment plants (salt water, sodium hypochlorite). Ensure that all steel surfaces are kept away from chloride sources that they are not designed to protect against.

Polyvinyl chloride (PVC) piping is brittle and care should be used when handling components made of PVC. Temperature extremes should also be avoided with PVC as well as mechanical stresses. PVC is not ultraviolet (UV) resistant and should not be stored where sunlight can contact the surface (this includes both direct and indirect sunlight). Chlorinated polyvinyl chloride (CPVC) piping does have higher UV, chemical and temperature resistance but the same general storage guidelines should be followed. PVC is not designed to convey compressed gasses (like air). Air must be completely bled from all PVC or CPVC lines before equipment is put into operation.

High density polyethylene (HDPE) is often used as an alternative to PVC. The key factor when installing HDPE piping is that it expands and contracts significantly with temperature shifts. Temperature can be changed in an HDPE pipeline by internal factors (e.g. during a high temperature CIP) or by external factors (e.g. a stagnant line exposed to sunlight). The support system and joints need to be designed to accommodate this expansion and contraction of HDPE.

Joints in chemical lines should not be located over electrical equipment or over areas where operators could reasonably be anticipated to be on a regular basis. Ideally, chemical system joints have flange

guards installed such that leakage can be detected visually. Another approach for chemical systems is to use double-walled piping with leakage detection systems.

Follow torquing recommendations provided by equipment vendors for all bolted connections; ideally by hand and not with power tools. Connections should be torqued in a star pattern to apply even force to the flanges or joints. Please ensure that the required flat washers and lock washers are included with these connections and that the bolt heads and nuts lie flat on the washers.

Note that stainless steel bolting will require an appropriate anti-seize compound applied to the threads before the connection is made. Fastening hardware specifications are listed on H_2O Innovation drawing notes and must be followed. These hardware specifications are applicable to shop manufactured equipment and field assembled components. For connections that are submerged, use NSF approved anti-seize in drinking water applications (e.g. White Knight food grade anti-seize compound).

3.1.7 - ELECTRICAL INSTALLATION

Refer to the project electrical drawings in this manual (Section 9 – Drawings and Diagrams) and the plant electrical drawings provided by the Owner's engineer. Electrical connections and interconnections to junction boxes and panels provided by H_2O Innovation must meet regulatory and local standards. Electrical work must be completed by licensed and insured electricians in the jurisdiction where the facility is being constructed. Interconnecting electrical cables need to be sized for the maximum anticipated electrical load and well supported in trays or conduit. Use separate cable trays for 24 VDC, 120 VAC and 600 VAC wire runs. Ensure that all panels, skids and cable trays (and electrical equipment in general) are properly and adequately grounded.

Generally speaking, systems will have a control panel and a power panel (these are often combined in smaller plants). Both panels need to be mounted and anchored in accordance with the project drawings. Like mechanical equipment, electrical equipment needs to be anchored according to local structural requirements if it is loose ship. Pre-mounted panels are taken into account when analyzing the support frames.

Field mounted instrumentation is normally wired to either a local junction box or back to the main control panel. This will be detailed in the electrical drawings for the plant. Ensure that the wire numbers depicted in the electrical drawings are clearly shown and permanently labeled on the field cables. Ensure that the electrical drawings are red-lined and updated as changes are made in the field. These red-lined drawings must be forwarded to H_2O Innovation before the field service representative comes to site.

Once equipment has been installed and wired the on-site electrician typically:

1. Bumps three phase motors to ensure that they have been wired for the correct rotational direction and changes the wiring if not correct.
2. Performs a continuity test for all field wiring.

3. Powers up the panels.
4. Ensures that all analog and digital signals to and from the Programmable Logic Controller (PLC) are transmitting properly.
5. Calibrates all instruments (see Section 3.3 – Calibration and Instrument Care).
6. Red lines electrical drawings with any changes that occurred in the field.
7. Shuts off power feeding the plant to ensure that the UPS is working properly.
8. Ensures that all of the remote IO is communicating with main PLC. Since a ring topology configuration is typically used, any Ethernet cable or fiber optic cable can be disconnected and the system should remain connected and communicating.

3.2 - COMMISSIONING

Before performing any commissioning work on this system please read the section in this manual on safety: Section 7 – Safety.

Commissioning services and on-site support are included in the contract and provided by H_2O Innovation. Refer to specific documentation related to commissioning for detailed information. Typically, the customer or contractor is responsible for ensuring a supply of electricity, raw water and a receiving destination for the treated water for pipe and module flushing and performance testing of the equipment. Also, the customer is responsible for the provision of necessary analytical tests for treated water quality during performance testing.

The services of a qualified electrician, pipefitter and millwright are required when H_2O Innovation staff are on site. The costs for these journeyman services are normally excluded from the commissioning contract value.

3.3 - CALIBRATION AND INSTRUMENT CARE

Before performing any calibration work on this system please read the section in this manual on safety: Section 7 -Safety.

Table 6 provides some general guidance on calibration and care for instruments in this facility and where to find the vendor information related to each type of instrument.

Table 6: Calibration and Instrument Care Guidance Summary

Manufacturer	Instrument	Frequency	Necessary Materials	Tab
ABB	Pressure Transmitter	Semi-annual	None	A1-1
ABB	Turbidimeter	Quarterly	None	A1-2
Chemline	Isolated Pressure Gauge	Semi-annual	Glycerin , replacement diaphragm (if required)	C1-5
Endress & Hauser	Level Transmitter	Annual	None	E1-4
Endress & Hauser	Electromagnetic Flowmeter	Semi-annual	Replacement seals	E1-7
Endress & Hauser	pH sensor	Semi-annual	Calibration solution	E1-2
Endress & Hauser	Dissolved Oxygen Sensor	Monthly	Replacement electrolyte, membrane body and sealing ring (if required)	E1-5
Endress & Hauser	Pressure Transmitter	Semi-annual	None	E1-6
IFM	Air Flowmeter	Monthly	Alcoholic cleaning solution	I1-1 I1-2
Wika	Pressure Gauge	Semi-annual	Glycerin	W1

SECTION 4 - SYSTEM CONFIGURATION

This membrane bioreactor system provided by H_2O Innovation is fully automated, which greatly reduces the operator's work. The system also includes monitoring functions and remote control access which allows more time for the operator to do other tasks. Refer to the literature and manufacturers manuals that are provided at the end of this manual for a detailed description of installation, operation and maintenance of any specific component.

The system designed for the Meliadine Project wastewater treatment plant is based on aerobic biological treatments. The figure below shows the process schematics for this plant.

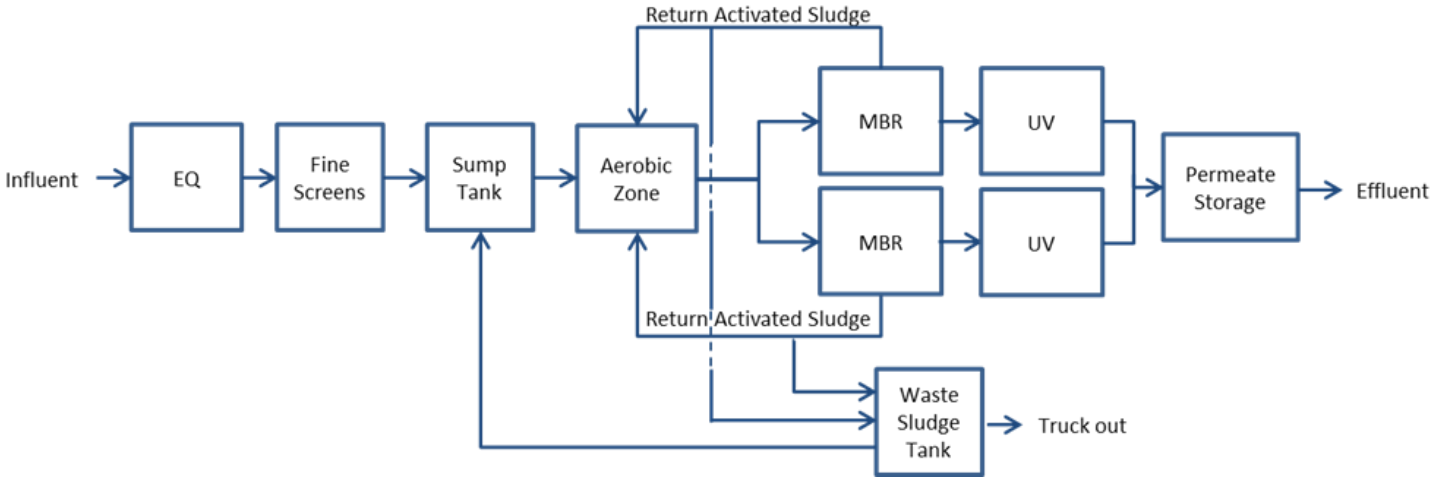

Figure 1 : Process Flow Schematics

The process illustrated above is much more detailed in the process and instrumentation diagrams (P&ID) available in Section 9.1 of this operation and maintenance manual. A basic understanding of the relationship between the different components of the system is a prerequisite to operate well and make effective maintenance of the system. The study of the drawings listed in the table below combined with the reading of Section 2.2 – Process Description provides the necessary understanding as previously mentioned.

Table 7 : Description of Process and Instrumentation Diagrams (P&ID)

Drawing Number	Drawing Name
U65875-C01-0110	Raw Water Screening
U65875-C01-0190	Feed Water Equalization
U65875-C01-0720	Aerobic Tank
U65875-C01-0740	Membrane Filtration
U65875-C01-0750 Sheet 1 and 2	Blowers for Membrane Bioreactor System
U65875-C01-0790	Permeate Tank
U65875-C01-0800 Sheet 1 and 2	Dosing Skid – Cleaning Chemicals and Alkalinity
U65875-C01-0960	Sludge Handling System

SECTION 5 - OPERATION PROCEDURES

Before operating the system, please read the section in this manual on safety: Section 7 – Safety.

This wastewater treatment system is controlled by digital input signals and a specific start sequence for the system. In this way, a transition step by step is done slowly and smoothly from a normal start up to an automatic process. The shutdown sequence is similar and closely follows the startup procedure.

Each piece of equipment forming this system appears on the touch screen that acts as the human-machine interface (HMI). When the symbol of a piece of equipment is selected, a screen appears, allowing the operator to configure and control this specific piece of equipment. From the screen, the operator can configure the device for a *control by the operator* or a *control by PLC* (automatic).

If the piece of equipment is set to *control by the operator mode*, the equipment starts to operate, regardless of the status of the plant. If the equipment is set to off, it will stop regardless of the status of the plant.

If the equipment is set in *control by PLC mode*, it will start or stop according to the selected mode and settings from the plant. For equipment whose speed can be controlled, such pumps with variable speed drives, the operator must enter a specific speed from 0-100%.

It is therefore possible to control each piece of equipment independently according to the desired results. The membrane bioreactor system is very simple to operate and requires set-up and monitoring as described in this section.

5.1 - MODES OF OPERATION OF THE SYSTEM

For more information on the modes of operation of this system as well as on the control philosophy, please refer to Section 8.1 – Process Control Narrative of this operation and maintenance manual. There are five modes of automatic operation on the provided system. They are described in table 8 below.

Table 8 : Modes of Operation of the System

Mode	Description
OFF	All process equipment is OFF.
Production	Production Mode occurs during normal operation when sewage is being sent to the plant. All process equipment operates based on the automatic control logic to provide treatment of sewage.
Standby	Standby Mode occurs when the amount sewage being sent to the system is less than the system capacity such that the system must wait for adequate feed to continue operation.
CEB	Chemically Enhanced Backpulse (CEB) is a weekly membrane maintenance process that sends a reverse flow of cleaning agents in the membrane modules to mitigate membrane fouling.
CIP	Clean-In-Place (CIP) is a process designed to return the membranes to a near-clean state using a high chemical concentration and relatively long duration (4 hours). The process is conducted semi-annually or as required.

The sequence of operation chart, presented in Section 8.1 – Process Control Narrative, determines which equipment is working according to each of the operating modes.

5.2 - MODES OF OPERATION OF THE DOSING SYSTEM

For the chemical skid to be operational, the valves must be arranged to allow the chemical to flow from the tank to the designated service point. For the chemical pump to be calibrated, the valves must be arranged to allow the chemical to flow from the tank to the calibration column. After calibration the column should be emptied before returning back to service. The valves must be arranged to allow the chemical to flow from the calibration column back to the tank. All these modes of operation are achieved by opening and closing the valves according to table 9 below.

Table 9 : Valve Positioning for the Modes of Operation of the Dosing System

Tag Number	Calibration Filling	Calibration Emptying	Operation
HV-XXX01	O	O	O
HV-XXX29	X	X	X
HV-XXX50	O	O	O
HV-XXX99	X	X	O
HV-XXX15	O	X	X
HV-XXX12	X	O	X
HV-XXX53	X	O	X
HV-XXX52	O	O	O

5.3 - EQUALIZATION PUMPS SET-UP AND AUTOMATIC OPERATION

The equalization pump should be set-up to operate at the average day flow rate (this is expected to change over time and requires regular adjustments). This flow can be monitored using the feed flow meter. Although the plant is designed for an average day flow rate of 206 m^3/day, the pump should be set to provide a flow rate that reflects the average flow that the system actually sees. This flow calibration should be done during a condition where the equalization tank level is just above the level of the pumps. The totalizer on feed flowmeter should be manually logged at the same time each day so that the cumulative volume that has passed through the system can be calculated for each 24-hour period. This will allow a reasonable estimate of the expected average day flow rate.

If the plant has very low or no flow for a period of 48 hours or more, please contact H_2O Innovation to discuss remedial measures that may be required to maintain the viability of the biomass through the addition of supplemental substrate.

5.4 - RETURN ACTIVATED SLUDGE FLOW

The flow rate of this pump should be set to approximately 400% of the design flow rate. A pump bypass and valve is included to allow this flow to be adjusted easily.

5.5 - OPERATING THE SYSTEM

Before operating the system, please read the section in this manual on safety: Section 7 - Safety.

Before starting the system, the wastewater treatment plant must be prepared for the operation. Use the following checklist as a guide to ensure that the unit is ready to operate. Here are the parameters to be monitored prior to starting the system:

- All necessary processing circuit breakers must be closed.
- Check that chemicals are at an acceptable level.
- Isolate the non-functional parts for repair and maintenance.
- Check the conditions of the previous alarms have been viewed, corrected and reset.
- Put all positioners back in automatic mode.
- Before starting, especially after long periods of stops, inspect the equipment and check that each piece of equipment is ready to operate according to the manufacturer's manual.

5.5.1 - STARTING PROCEDURE

A normal startup can be launched at any time when the plant is ready to operate. The PLC starts and operates the treatment system automatically after the initial startup sequence. It is important to position the manual valves so that the process can function properly, as described in Section 8.1 - Process Control Narrative.

Here is the standard automatic start sequence for a waste water treatment plant:

1. Open the power of the human-machine interface (HMI) and ensure that the display shows the treatment main screen (or overview screen). If the power is on, but the screen is blank, touch the screen to activate it.
2. If necessary, enter the username and password, then press the OK button. The main screen should then appear.
3. On this screen, put the train in automatic mode to make it available for production. General rule, the entire system is placed in automatic mode and the PLC will ensure that all equipment used alternatively. This provides a balanced use of the available equipment. The PLC will also ensure that equipment is started in a normal sequence, so that no damage will be done to the equipment.

5.5.2 - STOPING OR RESTARTING THE SYSTEM

The same principle applies to the shutdown sequence. The PLC will ensure that the equipment stops logically not to damage the equipment. Stopping the systenm can be requested at any time during production. Stops can also be caused by alarms. Please refer to Section 8.2 - Alarm List for more details.

To restart the system after a shutdown, you can use the following standard procedure:

1. At the HMI, navigate to the display of alarms and errors.
2. Stop the audible alarms if necessary.
3. Based on the information provided on the screen, determine what conditions may have caused the shutdown of the treatment system.
4. If the cause of the alarm is a problem that requires a physical intervention in the plant, refer to section 6.8- Trouble-Shooting for more information on recurring causes of stops.
5. Reset the alarm (or reset all the alarms) on the screen. The plant will return to its automatic mode and resume production.

5.5.3 - OPERATING GUIDELINES

Here are the major guidelines for daily operations of this water treatment system:

- The critical parameters of the feed water (Section 2) should be inspected at appropriate intervals as indicated by the operation experience and adjusted if necessary.

- It is important to keep records of the system daily and accurately. The information in these sheets is essential to solving problems related to operation and performance.
- Maintain and schedule preventive maintenance regularly. This includes visual inspection, repairing leaks, cleaning and touch-up paint.

5.6 - PERMEABILITY AND TRANSMEMBRANE PRESSURE

The transmembrane pressure (TMP) is a measure of the membrane's performance. This allows the monitoring of changes in the permeability. It will provide information on the performance of CIP cleans and effects of the changes in the water quality. TMP is the variation of pressure across the membrane, which is calculated by subtracting the hydrostatic pressure of membrane permeate side to the pressure of the feed side during permeation. The calculation is done in reverse during periods of flow reversal.

$$TMP(kPa) = Feed\ Pressure - Permeate\ Pressure$$

Permeability is a calculated parameter that normalizes the PTM for different flow rates and temperatures. The flow rate per membrane surface area is called the membrane flux and is calculated based on the equation below.

$$Flux\ \left(\frac{L}{m^2 h}\right) = {Flow\ \left(\frac{L}{h}\right)}\Big/{Membrane\ Area\ (m^2)}$$

Permeability is the flux divided by the transmembrane pressure.

$$Permeability = \frac{Flux\ (\frac{L}{m^2 h})}{TMP\ (kPa)}$$

Finally, to ensure proper reading of the permeability, it must be corrected by taking in consideration the effect of temperature using the following equation:

$$Permeability\ at\ 20°C = Permeability\ \times 1{,}024^{\,T-20}$$

In the equation above, T is the temperature in Celsius degrees.

5.7 - MANUAL CONTROLS

Some measure of manual control of equipment is possible; however these controls should only be used in exceptional circumstances or for troubleshooting assistance. It is expected that this plant operates in automatic mode most of the time.

1. **Valves**: Valves can be placed in an override condition and opened or closed manually from the HMI. Normally, automated valves are left in the automatic condition.
2. **Pumps or blowers with VFDs**: Pumps or blowers with Variable Frequency Drives (VFD) can be operated manually at specific frequencies. This allows the operator to adjust the flowrate of the pump or blower manually. Normally, the frequency that a pump or blower operates at is controlled by the PLC in automatic mode.
3. **Pumps or Blowers without VFDs**: Pumps or blowers without VFDs can be placed in ON or OFF mode. Normally, pumps or blowers without VFDs are left in automatic mode and turned ON and OFF by the PLC.
4. **Chemical Pumps**: Typically chemical pumps are operated only in AUTO mode. Refer to section Section 7 - Safety to understand some of the risks involved in chemical handling. Extreme care should be used when operating chemical pumps in manual mode. Chemical pumps typically are controlled with an ON or OFF signal.
5. **Control Panels**: Control panels can be manually disabled and de-energized with the disconnect switch on the control panels themselves.
6. **Emergency Stop Button**: System operation can be stopped by pressing the emergency stop button. This is a red button located on the main control panel. In some systems, buttons are also located on remote panels but the functionality is the same. These buttons will place the system in a neutral state (all equipment placed in the OFF state) and system operation cannot resume until the button that has been depressed is physically pulled out to its ON location. When the system restarts, it restarts according to the normal start up sequence as defined in the PLC program.

SECTION 6 - SYSTEM MAINTENANCE PROCEDURES

Before performing any maintenance, trouble-shooting or cleans on this system please read the section in this manual on safety: Section 7 - Safety.

6.1 - EQUIPMENT MAINTENANCE

This manual includes vendor catalogs providing operation and maintenance instructions for the major equipment and components. Operation and maintenance personnel should become familiar with these instructions in order to develop quick troubleshooting and proper maintenance techniques.

Refer to Section 10 – Vendors O&M Data and Manuals for details on how to maintain equipment items provided by sub-vendors. The following sections are specific to system maintenance for the MBR provided system.

6.1.1 - MAINTENANCE LOGS

Clear documentation of system and equipment maintenance is helpful in understanding equipment operating costs and in warranty claims. It is recommended that for each piece of equipment in the plant, equipment identification and maintenance log sheets are kept. An example of a log sheet is shown in the appendices of this document.

It is important to perform preventive maintenance procedures periodically and regularly. Once a month, it is primordial to check the entire system for signs of wear, deterioration and damage. These symptoms include excessive vibration, excessive or unusual noise, corrosion, pipes or loose connections and leaks.

During the inspection period, it is important to remove dust, sand, oil, moisture or other contaminants from the external surfaces of the engine. Also, remove dust, dirt or other debris from the air inlets.

6.2 - WORKING WITH ROTATING EQUIPMENT

When working with or around pumps, blowers and other rotating equipment items, in addition to the instructions listed in Section 10 – Vendors O&M Data and Manuals, take the following precautions:

1. Before performing maintenance, isolate and drain all piping connected to a pump.
2. Before performing maintenance on any rotating or powered equipment item, ensure the item is brought to a zero energy state and complete all lock-out, tag-out procedures required by government regulations, plant-specific procedures, and those recommendations in this manual's section on safety.
3. Perform service using manufacturer's manuals as a guide.

4. After completing maintenance, replace any guards or other safety components removed during the procedure. Personnel working on pumps used to transfer chemicals must be familiar with the safe-handling procedures associated with the chemicals involved.
5. When working with diaphragm pumps or other chemical transfer pumps, be aware that some media may remain within the pump's diaphragm chamber even after the pump has been drained and ensure proper PPE is worn during this work.
6. In general, motors should be inspected at regular intervals; approximately every 500 hours of operation or every 3 months, whichever occurs first. Keep the motor clean and the ventilation openings clear. Electrical connectors should be tight. Megger readings on motor insulation should be taken and recorded to monitor for issues.

6.3 - INSTRUMENT CALIBRATION

It is important to calibrate instrumentation and sensors at least twice a year. It is also important to confirm the status of the level and pressure switches at least once every six months. To do so, refer to their operation and maintenance manuals for specific calibration procedures and to the table in section 3.3 – Calibration and Instrument Care.

6.4 - LUBRIFICATION OF ELECTRIC MOTORS

Grease the bearings on the electrical motors of the pumps every six months (if necessary). The procedure is as follows:

1. Stop the electric motor.
2. Use a grease gun containing high quality grease that has a wide temperature range.
3. Remove the upper and lower caps of the grease ports of the shaft bearings. If a lubricant fitting is not permanently installed, install a grease gun fitting in the upper port.
4. Pump new grease into the bearing by upper port until the new clean grease appears at the drain port (lower port).
5. Roll the engine briefly until grease stops flowing through the port of the drain. Replace the cap of lower port (drain) and the cap of the upper port.

Caution: Do not over-lubricate the engine, as excessive lubrication can damage the bearing seals.

6.5 - LEAKING OF MECHANICAL SEALS

It is important to check for leaks from the mechanical seals after the first twenty-four (24) hours of operation. Thereafter, check the seals weekly. A leak is considered acceptable when it is not more than a drop every three or four minutes. If the leak rate increases, the gasket should be replaced.

6.6 - ANALYTICAL MONITORING

It is important to carefully monitor the plant over time to allow early detection of process problems. The collected information should be saved in a log file. It will be requested when providing troubleshooting assistance. Table 10 provides recommendations of a monitoring strategy.

Table 10: Recommended Monitoring Strategy

Source	Analyses	Source	Frequency
Feed Flow Rate	Flow Rate	Influent flowmeter	Daily
Waste Volume	Volume	Estimate volume wasted	Daily
Feed Sample	BOD, mg/L TSS, mg/L NH_3, mg/L-N TKN, mg/L-N TP, mg/L Alkalinity, mg/L as $CaCO_3$ pH Conductivity	Raw wastewater feed to the plant	Weekly Daily for first 4 weeks
Bioreactor Sample	MLSS, mg/L MLVSS, mg/L Dissolved Oxygen, mg/L pH	From Bio-Wheel Tank	Weekly Daily for first 4 weeks.
RAS Sample	MLSS, mg/L	From RAS/WAS line.	Weekly Daily for first 4 weeks
Treated Water Sample	BOD, mg/L TSS, mg/L NH_3, mg/L-N NO_3, mg/L-N TP, mg/L Alkalinity, mg/L as $CaCO_3$ Total Coliforms MPN/100mL Fecal Coliforms MPN/100mL pH	Immediately after UV disinfection	Weekly or based on reporting requirements Daily for first 4 weeks.

6.7 - MEMBRANE MAINTENANCE

6.7.1 - MEMBRANE FOULING

Membranes foul with use and this is a normal process. The expected rate of fouling is a design parameter that is used to determine the cleaning and maintenance protocols for the facility. The cleaning frequency is a function of the production rate and water quality, since cleaning interval and flux are inter-related. The higher the flux the plant is operating at, the higher the observed fouling rate will be, and the shorter the cleaning interval.

Membrane fouling creates an increase in the trans-membrane pressure (TMP). As a result, there are increased energy costs and potentially reduced membrane life (depending on the type of fouling). When TMP increases, the permeate pump requires more energy to pull the water across the membrane to meet the flow set-point. In order to operate the system in the most efficient way and keep costs down, running with a balanced TMP range is the recommended practice.

6.7.2 - FOULANTS

Foulants, in general, are compounds that accumulate on a membrane surface or inside the membrane pores. They reduce the effective membrane surface area reducing the area available for water to pass across the membrane. Foulants are divided into four types as shown in Table 11 : Foulants and Treatment.

Table 11 : Foulants and Treatment

Foulant Type	Definition	Treatment and Prevention
Solids	High levels of solids can clog membrane modules and prevent filtration.	Ensuring that pre-screening is operating effectively and that wasting to the sludge holding tank occurs regularly.
Precipitation	Scale can form when the compounds in feed water are concentrated beyond their solubility (more common in RO and NF systems). For example, calcium carbonate and magnesium sulfate. Hard scale formation membranes, can block water flow. High pHs and hard feed water can promote scale formation.	Acid based cleaners are used to remove fouling from precipitation. Adjustments to the waste stream concentration can also help. Lime softening and downward feed water pH adjustment can minimize risk.
Biological	Living organisms such as bacteria, fungus, and algae, are biological foulants. Colonies can form on the surface of the membrane blocking water flow through the membrane surface.	Regular treatment with antimicrobial agents and biocides are effective in preventing and reversing biological fouling. Sodium hypochlorite is the most frequently used agent to kill biological organisms.
Absorptive	Oils, polymers, cationic surfactants, and hydrocarbons, are common adsorptive foulants.	This type of fouling can be irreversible and feed waters containing these compounds should be minimized or piloted beforehand.

Since feed waters can change over time, it is important to have a regular sampling and testing program for potentially fouling compounds. This information is very valuable in diagnosing membrane fouling issues in the future, even if it is simply used to rule out potential causes.

6.7.3 - CLEANING PROTOCOL

The section 8.1 – Process Control Narrative of this manual describes the cleaning procedure for the project. Table 12 describes the recommended cleaning frequency for each type of cleaning and chemical cleaners.

Table 12 : Required Cleaning Frequency for This Plant

Cleaning Type	Chemical Product	Frequency
CEB (Chemically Enhaced Backpulse)	Sodium Hypochlorite	Once a week
CIP (Clean-In-Place)	Sodium Hypochlorite	Twice ayear
CIP (Clean-In-Place)	Citric Acid	Twice ayear

If alternatives to these cleaning frequencies seem necessary, discuss with your H_2O Innovation project manager. The cleaning operations must all be listed in a table (see Table 13: Typical Cleaning Log Sheet) by operators of the plant. This information is essential for monitoring the long-term performance and is required to maintain the warranty of the membranes. H_2O Innovation is a manufacturer of specialized cleaning chemicals and also offers laboratory testing services that can help determine better cleaning protocols for fouled membranes. It is important to identify and resolve the membrane cleaning and fouling problems as quickly as possible to avoid damage to the membranes.

Table 13 : Typical Cleaning Log Sheet

Cleaning Information	Date	Date	Date	Date	Date
Cleaning Type					
Chemical Product					
Volume of Chemical Product Used					
Starting Time					
Duration					
Temperature at the beginnig(°C)					
Temperature at the end(°C)					
Permeability before cleaning (corrected at 20°C)					
Permeability before cleaning (corrected at 20°C)					

6.8 - TROUBLE-SHOOTING

Before performing any maintenance, trouble-shooting or cleans on this system please read the section in this manual on safety: Section 7 - Safety.

This trouble-shooting guide is intended to provide basic information only. Experienced operators and maintenance staff are required at any facility that has significant process equipment such as this one. Only qualified and trained personnel should engage in trouble-shooting or maintenance on the equipment covered by this manual. The information provided in Section 10 – Vendors O&M Data and Manuals must also be used for diagnosing and trouble-shooting issues with sub-vendor components.

The following table describes some common problems and potential resolutions.

Table 14 : MBR System Trouble-Shooting Tips

Problem	Possible Cause	Potential Resolution
High TMP during production	Membrane fouling has occurred. If fouling occurred rapidly and unexpectedly, has there been an upstream issue?	Execute cleans as described in this manual once flow peaks have been alleviated.
	A manual valve in the pump suction line or filtrate line is partially closed.	Check positioning of all manual valves.
	Instrumentation failure.	Check the calibration and diagnostics of the feed pressure transmitter. Are the instruments communicating with the PLC?
	PID tuning parameters have been altered.	Confirm with H_2O Innovation that the PID is as it was left at the end of commissioning. Have tuning parameters been adjusted?

Problem	Possible Cause	Potential Resolution
	Aeration issues.	Check that air is getting to the entire membrane module. Air needs to get to all of each module to scour the membrane surface appropriately.
	Accidental adjustment of set-points.	Confirm set-points in HMI reflect the commissioned values or agreed to, modified values.
Pump low flow alarms	Manual valves are closed or partially closed. Has maintenance recently occurred on the pump or system?	Confirm that manual valves are all in the correct positions. Isolation valves should be open for equipment that is intended to be online.
	Automated valves are not actuating as expected.	Check that the automated valves in the line are opening when they should for the programming sequence by looking at the position indicators on the actuators. Confirm that the valve timing is suitable (delays between valve actuation and pump actuation). Confirm that all pneumatic lines are open and connected to pneumatic valves. Confirm lines do not contain frozen moisture.
	Piping leaks.	Check that all piping connections are tight and not leaking.
	Instrumentation related issues.	Check to see if there is air trapped in the pipe where the mag meters is installed or if air is passing through a mag meter.
	Air entrainment.	Check if air is causing issues with pump priming and proper functioning.
	Issues with VFD.	Check to see if the VFD has presented any faults.
Analogue device issues	Instrumentation issues – moisture ingress.	Check that the seals in the instrument are good.

Problem	Possible Cause	Potential Resolution
	Power issues.	Confirm that the instrument is receiving power and has booted up correctly. Check that the power supply is working.
	Communication issues.	Check that the PLC is receiving a signal from the instrument and if the instrument has HART, check the instrument's on-board diagnostics.
Digital device issues	Power issues.	Check that the fuse has not blown to the switch and that the switch is receiving power as expected.
	Communication issues.	Check that the PLC is receiving a signal from the switch (continuity).
Filtrate water quality	Leaking modules or plates.	A module inspection may be required – please contact H_2O Innovation.
	Instrumentation issues (typically turbidity; if installed).	The most common cause of high turbidity are issues with the instrument itself. Confirm that the instrument is functioning correctly and that calibration is accurate. Confirm that the flow through analytical instruments is within specification.
	Air entrainment.	The second most common cause of direct quality measurement issues is air entrainment in the process stream. Confirm that the flow rate to the instrument is within specification and that degassers are functioning appropriately.
Unexpected alarms on HMI	Devices in manual.	Required equipment is disabled or not in automatic mode. Place all available equipment in AUTO mode.

SECTION 7 - SAFETY

7.1 - OUR FIRST PRIORITY – SAFETY

For your own protection and that of your co-workers, please pay particular attention to this section. These safety precautions are intended to protect operators and equipment from risk of physical harm and damage that may arise from the operation and maintenance of this water treatment system. The following table summarizes the symbols used in this manual to highlight areas of risk. These warnings are not intended to be exhaustive and the operator and maintenance staff are expected to execute due diligence in carrying out their work on this system. When in doubt please ask for assistance or advice.

Symbol	Description
	Alerts operators to items that if not followed will result in severe injury or death.
	Alerts operators to items that if not followed can result in severe injury or death.
	Alerts operators to items that if not followed may result in a minor or major injury.
	Alerts operators to items that if not followed may result in damage to equipment or property.

7.2 - PREAMBLE AND GENERAL PRECAUTIONS

Please ensure to read and understand the entire operational and maintenance manual thoroughly. Ensure all assembly, operation, maintenance or inspection instructions described in this manual are followed before using any devices included with this plant. A device can be a valve, instrument, equipment item or any other physical or software component required in the operation of this water plant. Misuse of devices or failure to follow the instructions described in this manual may result in death, serious personal injury and/or damage to property. Failure to read the entire manual before using any device included in the scope of this project constitutes a misuse.

The plant operator is responsible to inspect each device before using it. Only use the device if it passes inspection. Always use the device as described by the original manufacturer of the device. Do not use any malfunctioning device. Keep by-standers away from device during use.

It is up to the operator to use common sense when operating any device. A moment of inattention while operating a device can cause personal injury or death to the operator or to any by-standers and/or damage to property. Keep hands, clothes, loose jewelry from being caught in moving parts. Do not exceed stated weight limits for any device used for lifting.

Do not modify any device in any way other than that described in vendor instruction manuals unless prior written approval of H_2O Innovation Inc. is obtained. Unauthorized modifications to a device may void the warranty and might make the device unsafe to use.

In no event shall H_2O Innovation Inc. be liable for any indirect, incidental or consequential damages resulting from the use of devices in this plant. This disclaimer applies before, during and after use of the device, which include, without limitation, assembly, inspection, use and/or storage. No warranties (express, implied, or statutory) are made in connection with this operational and maintenance manual.

BY REFERRING TO, OR OTHERWISE EMPLOYING, THIS OPERATIONAL AND MAINTENANCE MANUAL, THE OPERATOR, USER OR OWNER OF THE PLANT AGREES TO DEFEND, PROTECT, INDEMNIFY, AND HOLD H_2O INNOVATION INC., ITS AFFILIATES, SUBSIDIARIES, SUCCESSORS, ASSIGNS, DIRECTORS, OFFICERS, AGENTS, AND EMPLOYEES HARMLESS FROM AND AGAINST ALL CLAIMS, LOSSES, EXPENSES, DAMAGES AND LIABILITIES, DIRECT, INCIDENTAL, OR CONSEQUENTIAL, ARISING FROM ACCEPTANCE OR USE OF THIS MANUAL, INCLUDING LOSS OF PROFITS AND REASONABLE ATTORNEY'S FEES, WHICH MAY ARISE OUT OF THE ACCEPTANCE OR USE OR ALLEGED USE OF THIS MANUAL, IT BEING THE INTENT OF THIS PROVISION AND OF THE OPERATOR, USER OR OWNER TO ABSOLVE AND PROTECT H_2O INNOVATION INC., ITS AFFILIATES, SUBSIDIARIES, SUCCESSORS, ASSIGNS, DIRECTORS, OFFICERS, AGENTS, AND EMPLOYEES FROM ANY AND ALL LOSS RELATING IN ANY WAY TO THIS OPERATIONAL AND MAINTENANCE MANUAL INCLUDING THOSE RESULTING FROM ITS OWN NEGLIGENCE.

7.3 - SAFETY STANDARDS

Local safety regulations and standards take precedence over the recommendations discussed here only when they are stricter or more onerous than this manual. The operators and plant owners are expected to follow their local standards and augment those with the information provided in this manual. Also, standards evolve over time and the onus is on the plant operations staff to maintain current certifications and be familiar with the most recent requirements, particularly those related to safety.

7.4 - PERSONAL PROTECTIVE EQUIPMENT (PPE)

Personal Protective Equipment (PPE) is required to operate this system safely. The following items should be readily available and properly fitted for operators of this system:

1. Hardhat
2. Safety boots
3. Safety glasses with side shields
4. Face shields
5. Rubber aprons
6. Ear plugs
7. Fall protection equipment (lanyard, harness)
8. Housekeeping equipment (brooms, mops, spill kits, rags)

7.5 - KEY SAFETY WARNINGS

Please pay particular attention to this section. These safety precautions are intended to protect operators from risk of physical harm and damage that may arise from the operation and maintenance of this water treatment system.

Do not mix sodium hypochlorite solution with any acidic solution. This mixture will generate toxic chlorine gas which is lethal. Common acidic solutions include citric acid, sulfuric acid, hydrochloric acid, sodium bisulfite (but are not limited to these).

Membrane modules and piping is under pressure (or vacuum). Ensure that equipment and piping networks are fully de-pressurized to atmospheric pressure before servicing. Energy release, particularly for compressible fluids, can cause serious personal injury or death.

Working on or servicing electrical equipment or mechanical equipment powered by electricity can cause severe injury or death if the electrical source is not completely disconnected and locked out by the service person. Following a documented lock-out, tag-out program is highly recommended for working on equipment in this system.

Air (or other gasses) trapped in PVC piping or conveyed by PVC piping can cause severe injury or death. PVC material shatters if the piping is subject to abnormal stresses when compressed air is present inside. Pieces of piping become projectiles in this case. Ensure air is completely bled with non-compressible fluids from all systems that use PVC piping.

The cleaning of membranes involves the use of strong chemicals. When handling chemicals wear appropriate PPE (face shields, full length rubber gloves, rubber apron, safety glasses with side shields) as recommended in the MSDS for each respective chemical. The MSDS will also provide treatment recommendation in the case of exposure to the chemicals. Failure to follow MSDS recommendations can result in serious injury or death.

The cleaning chemical sodium hypochlorite generates chlorine gas over time that presents a health and safety concern and is highly corrosive to humans and equipment surfaces. Appropriate ventilation is required in areas where sodium hypochlorite solutions are exposed to the operator's air space or equipment that can be damaged by corrosion.

Membranes are typically shipped in a preservative solution. Ensure appropriate PPE (face shields, full length rubber gloves, rubber apron, safety glasses with side shields) as recommended by the membrane manufacturer are worn. The MSDS for the preservative solution will also provide treatment recommendation in the case of exposure to the chemicals. Failure to follow MSDS recommendations can result in serious injury or death.

Membrane modules are heavy and should not be manipulated by hand. Use properly designed lifting equipment for installing and removing modules into membrane racks. A falling module can result in serious injury or death.

Do not lift skids from equipment or piping mounted on the skid. Doing so may result in injury or death for workers involved in the operation or damage to the components mounted on the skid.

Exposure to moderate noise levels can lead to long term hearing damage. Exposure to high noise levels, even for short durations, can cause immediate hearing damage. When the possibility of exposure to such noise levels is present {particularly around air blowers, compressors, air release devices} use appropriate hearing protection.

This plant includes rotating equipment. Blowers, compressors, pumps and valves all have components that turn with high energy. Before operating equipment with rotating components or pinch points, ensure that all shields, guards, and emergency kill switches are in place and operational. Rotating parts can catch clothing, fingers, or tools and cause serious injury, death or equipment damage.

Ultraviolet light is often used for disinfection in water treatment systems. Do not look directly at light sources or expose skin to the light as it can burn both eyes and skin.

Maintaining strict cross-connection controls are required to protect public health and maintain water quality. This system may be outfitted with automated cross-connection prevention systems, however, the proper operation of these needs to be routinely verified by operations staff. Failure of cross-connection prevention systems can result in release of chemical or untreated water into the public water system.

When alternating between cleaning chemicals (particularly between an acid and sodium hypochlorite), ensure that the lines and tanks are fully rinsed before using the next chemical. The use of higher quality product water for rinsing is recommended (rather than feed water). Failure to rinse systems adequately can result in adverse chemical reactions. Refer to other warnings in this section.

Operating equipment can get hot. Also, heated chemical solutions are used for cleaning membranes and equipment or piping may not be protected with insulation. To avoid burns, please use caution when touching operating equipment and piping in the plant. Permanent operator protection insulation or guarding is typically required for components that can be warmer than 45°C.

When cleaning membranes, strictly follow the procedures described in the membrane manual and document cleans appropriately on log sheets. Otherwise damage may occur to the modules which can negatively affect the membrane performance and the membrane warranty.

Membrane modules can be stored in water and not used for short periods of time. If they are to be left for longer than 4 days, follow procedures listed in the membrane module manufacturer's manual. Failure to follow recommendations from the manufacture can result in membrane damage.

During membrane integrity tests (MIT) on ultra-filtration membrane systems, the compressed air used must be clean, dry, and free of oil. Do not exceed the maximum recommended testing pressures.

During construction, maintenance, or any other work performed directly above open tanks that feed membrane systems (particularly upstream of the membranes and downstream of the strainers), ensure that foreign debris (for example; pipe turnings, paint chips) do not fall into the tank.

Operating the system using manual controls introduces a risk of equipment damage. It is highly recommended that the system is monitored carefully and with an operator present if manual controls or partial manual controls are used. Refer to the section on manual controls for more information.

7.6 - SAFETY GUIDELINES

There are a number of general guidelines that can greatly improve the safety of operators and visitors to a water treatment plant:

1. **Personal Protective Equipment (PPE)**: Wear the appropriate PPE for the job or task being conducted which applies to bystanders as well. Generally speaking, when in the plant environment, safety boots and safety glasses are highly recommended as a minimum.
2. **Housekeeping**: Maintaining a clean plant is key for minimizing the risk of accidents. Ensure that all tools and loose items are placed in the correct location and that spills are quickly cleaned up.
3. **Routine maintenance**: Maintaining equipment in good running order and conducting preventative maintenance regularly can help prevent situations where safety risks are elevated.
4. **Personal hygiene**: With any water treatment system pathogens can be concentrated in the waste stream. Regular personal hygiene (like washing hands) is important to prevent illness and spread of contamination. If operators are exposed to feed water, concentrate or other water not suitable for human consumption, eyes should be immediately rinsed at an eye wash station and exposed skin should be cleaned thoroughly with soap and warm water, particularly before eating, drinking or smoking.
5. **Vaccinations**: Due to pathogenic risk at water treatment facilities, it is recommended that operators and maintenance staff be vaccinated against tetanus and Hepatitis A and Hepatitis B. Seek medical advice from a licensed physician before exposure to water at the plant and also if you may have been exposed to potential sources of biological hazards. This is particularly important in wastewater systems.
6. **Fall protection**: Although pressurized membrane systems do not require significant tankage, the risk of falling into a tank or off an elevated platform can be present. A fall of any height can hurt operators and maintenance staff. Follow the local work environment regulations with respect to

falls and fall prevention. Safety harnesses, lanyards and engineered anchor points may be required. Note that fall arrest and fall restraint are distinct and in general fall restraint is preferred due to the lower risk of injury.

7. **Equipment specific safety recommendations**: Refer to the provided equipment safety manuals. These instructions manuals must be followed for safe operation and maintenance of the system as a whole.
8. **Chemical showers and eyewash stations**: Safety showers and eyewash systems are typically installed within proximity of chemical systems. Operators need to be trained in their effective use and monitoring systems installed such that assistance can be provided in the case that somebody uses one of these systems.
9. **Chemical spills**: Spill clean-up kits and neutralization chemicals should be readily available and operators trained in how to use these systems.
10. **High pressure equipment**: Some pumps, compressors and blowers are capable of generating very high pressures which creates the risk of rupture or major damage if safety devices are bypassed or not maintained. Pressure relief valves should be checked regularly, and tubing or piping used to convey pressurized fluids, such as actuated valve air lines, should be regularly inspected for cracks and damage.
11. **Material Safety Data Sheets (MSDS)**: MSDS' need to be present and available for quick reference for each chemical in use in the plant and operators should read these before doing any work involving these chemicals. The supplier of the chemical is responsible for providing the end user with MSDS sheets. Each chemical in use in the plant must have an MSDS present. All chemical containers must be labeled accurately with the chemical name such that the chemical can be readily cross-referenced with the MSDS.
12. **Lighting**: Ensuring that work areas (internal and external) are well lit is important for minimizing risks to operators and also for ease of operations and maintenance.
13. **Confined spaces**: Many workplaces contain areas that are confined spaces. While they are not necessarily designed for people, they are large enough for workers to enter and perform certain jobs. A confined space also has limited or restricted means for entry or exit and is not designed for continuous occupancy. Confined spaces include, but are not limited to, tanks, vessels, silos, storage bins, hoppers, vaults, pits, manholes, tunnels, equipment housings, ductwork, pipelines, etc. OSHA uses the term "permit-required confined space" to describe a confined space that has one or more of the following characteristics: contains or has the potential to contain a hazardous atmosphere; contains a material that has the potential to engulf an entrant; has walls that converge inward or floors that slope downward and taper into a smaller area which could trap or asphyxiate an entrant; or contains any other recognized safety or health hazard, such as unguarded machinery, exposed live wires, or heat stress. Ensure workers are trained to recognize confined spaces and that only trained personnel are permitted to enter confined spaces when the appropriate safeguards are in place. A means of worker extraction and atmosphere control are normally used when workers are exposed to confined spaces.
14. **Lock-out, tag-out (LOTO)**: There are guidelines that address the practices and procedures necessary to disable machinery or equipment, thereby preventing the release of hazardous

energy while employees are performing service and maintenance activities. Their standards outline measures for controlling hazardous energies — electrical, mechanical, hydraulic, pneumatic, chemical, thermal, and other energy sources. Employees servicing or maintaining machines or equipment may be exposed to serious physical harm or death if hazardous energy is not properly controlled. A documented LOTO system is highly recommended for all operating water treatment facilities.

15. **Safety culture**: An environment where safety discussions happen before all maintenance operations, where operators are free to raise safety concerns without retribution and one where safety reports are openly shared is highly recommended for this water treatment plant. Safety should be built into all routine work and standard operating procedures at the plant and all maintenance work should be prefaced with a discussion on safety for the work at hand. This builds a culture where safety is a top priority and helps ensure all workers go home healthy at the end of their day.

7.7 - HARMFUL GAS SAFETY PROCEDURE

Power Outage or System Shutdown

In the event of a power outage or any situation resulting in a system shutdown lasting more than 24 hours :

1. Put the wastewater treatment plant main power switch into the OFF position.

2. Make sure equipment items that are running in the wastewater treatment plant or in the direct vicinity are at a minimum Class 1 Division 2 rated.

3. Make sure equipment items which will automatically start to run once the power comes back on in the wastewater treatment plant direct vicinity are Class 1 Division 2 rated.

4. Personnel required to go into the wastewater treatment plant during the power outage or system shutdown must be equipped with explosion proof portable gas detectors and breathing apparatus to ensure that levels of methane, hydrogen sulfide and oxygen are at acceptable levels as determined by the site safety officer.

5. Prior to entering, open at least two (2) or more wastewater treatment plant openings (doors, windows) to encourage air exchanges. Methane, hydrogen sulfide and oxygen levels must be monitored at all time. Nobody is to be allowed in the wastewater treatment plant if methane, hydrogen sulfide and oxygen levels are unsafe as determined by the site safety officer.

6. When the power outage or system shutdown is over, go through steps 4 & 5. Once it is confirmed the air in the whole wastewater treatment plant is safe, put the wastewater treatment plant main power switch into the ON position. Confirm that the ventilation system and aeration system (blower) are running properly.

Blower Failure

In case of a blower failure or low blower air flow, ensure the ventilation system functions properly and as expected to prevent the buildup of noxious gases or reduction in oxygen. Refer to the “Power Outage or System Shutdown” procedure.

Ventilation System Failure

In case of a ventilation system malfunction, it is necessary to monitor the methane, hydrogen sulfide and oxygen levels at all time using an explosion proof portable gas detectors in order to ensure the air quality is at safe levels as determined by the site safety officer. If any of the gas levels are at an undesirable level, open all openings (doors, windows) possible in order to encourage air exchanges. If methane level reaches a dangerous level, put the wastewater treatment plant main power switch into the OFF position to prevent risk of explosion. Refer to the “Power Outage or System Shutdown” procedure until the ventilation system is repaired.

7.8 - MATERIAL SAFETY DATA SHEETS

7.8.1 - SODIUM HYPOCHLORITE

Material Safety Data Sheet

LA5839
Sodium Hypochlorite 12% Water Treatment

1. CHEMICAL PRODUCT AND COMPANY IDENTIFICATION

Product Id: LA5839
Product Name: Sodium Hypochlorite 12% Water Treatment
Synonyms: Sodium oxychloride; Soda bleach liquor; Javel water; Clorox; Javex.
Chemical Family: Hydrochlorous acid, sodium salt.
Application: Chemical intermediate. Laboratory reagent. Water treatment. Pulp and paper. Bleaching agent. Disinfectant.

Distributed By:
Univar Canada Ltd.
9800 Van Horne Way
Richmond, BC
V6X 1W5

Prepared By: The Environment, Health and Safety Department of Univar Canada Ltd.
Preparation date of MSDS: 03/Apr/2014
Telephone number of preparer: 1-866-686-4827

24-Hour Emergency Telephone Number (CANUTEC): (613) 996-6666

2. HAZARDS IDENTIFICATION

Potential Acute Health Effects:
Eye Contact: Corrosive to eye tissue and may cause severe damage and blindness.
Skin Contact: Corrosive. May cause severe skin irritation. Prolonged contact may lead to burns and blisters and may aggravate dermatitis. May cause whitening or bleaching of the skin.
Inhalation: Corrosive to the respiratory passage. Causes irritation of the mouth, nose and throat. Repeated and/or prolonged exposures may cause productive cough, running nose, bronchopneumonia, pulmonary edema (fluid build-up in lungs) and reduction of pulmonary function. If mixed with acids or warmed to temperatures greater than 40 °Celsius, Sodium hypochlorite solutions release chlorine gas. This gas can cause severe irritation of the nose and throat. Exposures to high levels of chlorine gas may result in severe lung damage.
Ingestion: Corrosive. Causes burns to the mouth, throat and stomach. Causes vomiting, nausea, and diarrhea. Coma, shock and death may occur.

3. COMPOSITION / INFORMATION ON INGREDIENTS

Ingredients	Percentage (W/W)	LD50s and LC50s Route & Species:
Water 7732-18-5	60-100	Oral LD50 (Rat) >90 mL/kg
Sodium Hypochlorite, Solution 7681-52-9	10-30	Oral LD50 Rat = 8200 mg/kg Dermal LD50 Rabbit > 10000 mg/kg

Note: Drug Identification Number (DIN) - 02265729

4. FIRST AID MEASURES

Eye Contact: Wash eyes with water for a minimum of 30 minutes or until no evidence of the chemical remains. Hold eyelids open during flushing. Seek immediate medical attention.
Skin Contact: In case of contact, immediately flush skin with plenty of water for at least 30 minutes. Get medical attention.
Inhalation: Remove person to fresh air. If not breathing, give artificial respiration. If breathing is difficult, get immediate medical attention.
Ingestion: Rinse mouth with water. Do not induce vomiting. Do not give anything by mouth to an unconscious person. If vomiting occurs spontaneously, keep head below hips to prevent aspiration of liquid into the lungs. Seek immediate medical attention.
Notes to Physician: Due to the severely irritating or corrosive nature of the material, swallowing may lead to ulceration and inflammation of the upper alimentary tract with hemorrhage and fluid loss. Also, perforation of the esophagus or stomach may occur, leading to mediastinitis or peritonitis and the resultant complications.

5. FIRE FIGHTING MEASURES

Flash Point: None.
Flash Point Method: Not applicable.
Autoignition Temperature: Not available.
Flammable Limits in Air (%): Not Available.
Extinguishing Media: Use extinguishing media appropriate for surrounding fire.
Special Exposure Hazards: Keep containers cool to prevent rupture and release of material. Closed containers may explode in fire. Spilled material may cause floors and contact surfaces to become slippery.
Hazardous Decomposition/Combustion Materials (under fire conditions): Chlorine. Oxygen. Oxides of sodium.
Special Protective Equipment: Fire fighters should wear full protective clothing, including self-contained breathing equipment.
NFPA RATINGS FOR THIS PRODUCT ARE: Not Available.
HMIS RATINGS FOR THIS PRODUCT ARE: HEALTH 3, FLAMMABILITY 0, REACTIVITY 1

6. ACCIDENTAL RELEASE MEASURES

Personal Precautionary Measures: Wear appropriate protective equipment.
Environmental Precautionary Measures: Prevent entry into sewers or streams, dike if needed. Consult local authorities.
Procedure for Clean Up: Ventilate area. Small spills: soak up with absorbent material and scoop into containers. Large spills : prevent contamination of waterways. Dike and pump into suitable containers. Clean up residual with absorbent material, place in appropriate container and flush with water. Spilled material may cause floors and contact surfaces to become slippery.

7. HANDLING AND STORAGE

Handling: For industrial use only. Handle and open containers with care. Avoid contact with eyes, skin and clothing. Do not ingest. Avoid inhalation of chemical. Empty containers may contain hazardous product residues. Keep the containers closed when not in use. Protect against physical damage. Use appropriate personnel protective equipment. When diluting, add this product to water in small amounts to avoid spattering. Never add water to this material.
Storage: Store in a cool, dry, well ventilated area, away from heat and ignition sources. Store below 29 °C. Do not freeze. Keep away from direct sunlight. Store away from organic chemicals, strong bases, metal powders, carbides, sulfides, and any readily oxidizable material. Storage area should be equipped with corrosion-resistant floors, sumps and should have controlled drainage to a recovery tank. Store in a sealed polyethylene lined container.

8. EXPOSURE CONTROLS/PERSONAL PROTECTION

Engineering Controls:

Local exhaust ventilation as necessary to maintain exposures to within applicable limits. Make up air should always be supplied to balance air exhausted (either generally or locally). Ventilation required when spraying or applying in a confined area. Ventilation should be explosion proof. Eliminate ignition sources.

Respiratory Protection: Wear a NIOAH approved full facepiece respirator for acid gases or a self-contained breathing apparatus for air concentration levels up to 5 ppm. NIOSH approved supplied air respirator when airborne concentrations exceed exposure limits.

Gloves:

Impervious gloves. Neoprene gloves. Nitrile gloves. Rubber gloves.

Skin Protection: Neoprene coated apron or chemical resistant clothing. Impervious boots.

Eyes: Chemical safety goggles and/or full face shield to protect eyes and face, if product is handled such that it could be splashed into eyes.

Other Personal Protection Data: Ensure that eyewash stations and safety showers are proximal to the work-station location.

Ingredients	Exposure Limit - ACGIH	Exposure Limit - OSHA	Immediately Dangerous to Life or Health - IDLH
Water	Not available.	Not available.	Not Available.
Sodium Hypochlorite, Solution	0.5 ppm As For Chlorine.	Not available.	Not Available.

9. PHYSICAL AND CHEMICAL PROPERTIES

Physical State: Liquid
Color: Clear Green to yellow.
Odor: Chlorine.
pH 11.5 - 13
Specific Gravity: 1.175
Boiling Point: Decomposition at 40°C / 104°F
Freezing/Melting Point: -25°C / -12°F
Vapor Pressure: 17.5 mmHg
Vapor Density: Not Available.
% Volatile by Volume: Not Available.
Evaporation Rate: Not Available.
Solubility: Soluble in water.
VOCs: Not Available.
Viscosity: Not Available.
Molecular Weight: Not Available.
Other: Not Available.

10. STABILITY AND REACTIVITY

Chemical Stability: Unstable above 40°C / 104 °F.
Hazardous Polymerization: Will not occur.
Conditions to Avoid: High temperatures. Exposure to light.
Materials to Avoid: Acids. Ammonia. Strong oxidizers. Reducing agents. Metals.
Hazardous Decomposition Products: When heated to decomposition, it emits acrid smoke and irritating fumes. Chlorine. Oxides of sodium. Oxygen.

Additional Information:

Hypochlorites may react with primary amines to form nitrogen trichloride which explodes spontaneously in air. Hypochlorite bleach reacts with urea to form nitrogen trichloride which explodes spontaneously in air. Some metals accelerate the decomposition of Sodium Hypochlorite. Nickel. Copper. Tin. Iron and its alloys. Manganese.

11. TOXICOLOGICAL INFORMATION

Principle Routes of Exposure

Ingestion: Corrosive. Causes burns to the mouth, throat and stomach. Causes vomiting, nausea, and diarrhea. Coma, shock and death may occur.

11. TOXICOLOGICAL INFORMATION

Skin Contact: Corrosive. May cause severe skin irritation. Prolonged contact may lead to burns and blisters and may aggravate dermatitis. May cause whitening or bleaching of the skin.
Inhalation: Corrosive to the respiratory passage. Causes irritation of the mouth, nose and throat. Repeated and/or prolonged exposures may cause productive cough, running nose, bronchopneumonia, pulmonary edema (fluid build-up in lungs) and reduction of pulmonary function. If mixed with acids or warmed to temperatures greater than 40 °Celsius, Sodium hypochlorite solutions release chlorine gas. This gas can cause severe irritation of the nose and throat. Exposures to high levels of chlorine gas may result in severe lung damage.
Eye Contact: Corrosive to eye tissue and may cause severe damage and blindness.

Additional Information: Aspiration may cause lung damage. Corrosive effects on the skin and eyes may be delayed, and damage may occur without the sensation or onset of pain.
Acute Test of Product:
Acute Oral LD50: Not Available.
Acute Dermal LD50: Not Available.
Acute Inhalation LC50: Not Available.

Carcinogenicity:

Ingredients	IARC - Carcinogens	ACGIH - Carcinogens
Water	Not listed.	Not listed.
Sodium Hypochlorite, Solution	Group 3	Not listed.

Carcinogenicity Comment: No additional information available.

Reproductive Toxicity/ Teratogenicity/ Embryotoxicity/ Mutagenicity: Not Available.

12. ECOLOGICAL INFORMATION

Ecotoxicological Information:

Ingredients	Ecotoxicity - Fish Species Data	Acute Crustaceans Toxicity:	Ecotoxicity - Freshwater Algae Data
Water	Not Available.	Not Available.	Not Available.
Sodium Hypochlorite, Solution	0.03 - 0.19 mg/L LC50 (Oncorhynchus mykiss) 96 h semi-static 0.05 - 0.771 mg/L LC50 (Oncorhynchus mykiss) 96 h flow-through 0.06 - 0.11 mg/L LC50 (Pimephales promelas) 96 h flow-through 0.18 - 0.22 mg/L LC50 (Oncorhynchus mykiss) 96 h static 0.28 - 1 mg/L LC50 (Lepomis macrochirus) 96 h flow-through 0.4 - 0.8 mg/L LC50 (Lepomis macrochirus) 96 h static 4.5 - 7.6 mg/L LC50 (Pimephales promelas) 96 h static	Not Available.	0.095 mg/L EC50 Skeletonema costatum 24 h

Other Information:
Harmful to aquatic life at low concentrations. Toxicity is primarily associated with pH.

13. DISPOSAL CONSIDERATIONS

Disposal of Waste Method: Disposal of all wastes must be done in accordance with municipal, provincial and federal regulations.
Contaminated Packaging: Empty containers should be recycled or disposed of through an approved waste management facility.

14. TRANSPORT INFORMATION

DOT (U.S.):
DOT Shipping Name: HYPOCHLORITE SOLUTION
DOT Hazardous Class 8
DOT UN Number: UN1791
DOT Packing Group: III
DOT Reportable Quantity (lbs): Not Available.
Note: No additional remark.
Marine Pollutant: No.

TDG (Canada):
TDG Shipping Name: HYPOCHLORITE SOLUTION
Hazard Class: 8
UN Number: UN1791
Packing Group: III
Note: No additional remark.
Marine Pollutant: No.

15. REGULATORY INFORMATION

U.S. TSCA Inventory Status: All components of this product are either on the Toxic Substances Control Act (TSCA) Inventory List or exempt.

Canadian DSL Inventory Status: All components of this product are either on the Domestic Substances List (DSL), the Non-Domestic Substances List (NDSL) or exempt.

Note: Not available.

U.S. Regulatory Rules

Ingredients	CERCLA/SARA - Section 302:	SARA (311, 312) Hazard Class:	CERCLA/SARA - Section 313:
Water	Not Listed.	Not Listed.	Not Listed.
Sodium Hypochlorite, Solution	Not Listed.	Listed	Not Listed.

California Proposition 65: Not Listed.
MA Right to Know List: Listed.
New Jersey Right-to-Know List: Listed.
Pennsylvania Right to Know List: Listed.

WHMIS Hazardous Class:
E CORROSIVE MATERIAL

16. OTHER INFORMATION

Additional Information: This product has been classified in accordance with the hazard criteria of the Canadian Controlled Products Regulations (CPR) and the MSDS contains all the information required by the CPR.

Disclaimer: NOTICE TO READER:
Univar, expressly disclaims all express or implied warranties of merchantability and fitness for a particular purpose, with respect to the product or information provided herein, and shall under no circumstances be liable for incidental or consequential damages.

Do not use ingredient information and/or ingredient percentages in this MSDS as a product specification. For product specification information refer to a Product Specification Sheet and/or a Certificate of Analysis. These can be obtained from your local Univar Sales Office.

All information appearing herein is based upon data obtained from the manufacturer and/or recognized technical sources. While the information is believed to be accurate, Univar makes no representations as to its accuracy or sufficiency. Conditions of use are beyond Univar's control and therefore users are responsible to verify this data under their own operating conditions to determine whether the product is suitable for their particular purposes and they assume all risks of their use, handling, and disposal of the product, or from the publication or use of, or reliance upon, information contained herein. This information relates only to the product designated herein, and does not relate to its use in combination with any other material or in any other process.

*****END OF MSDS*****

7.8.2 - CITRIC ACID

Material Safety Data Sheet

LA3183
Citric Acid 50% Solution

1. CHEMICAL PRODUCT AND COMPANY IDENTIFICATION

Product Id: LA3183
Product Name: Citric Acid 50% Solution
Synonyms: None
Chemical Family: None Known
Application: Not Available.

Distributed By:
Univar Canada Ltd.
9800 Van Horne Way
Richmond, BC
V6X 1W5

Prepared By: The Environment, Health and Safety Department of Univar Canada Ltd.
Preparation date of MSDS: 04/Feb/2014
Telephone number of preparer: 1-866-686-4827

24-Hour Emergency Telephone Number (CANUTEC): (613) 996-6666

2. HAZARDS IDENTIFICATION

Potential Acute Health Effects:
Eye Contact: Causes eye irritation. Resulting in stinging, reddening, tearing and swelling.
Skin Contact: Causes skin irritation. Resulting in stinging, reddening and swelling.
Inhalation: May cause irritation of the respiratory tract.
Ingestion: If large amounts of the product are ingested, symptoms may include gastrointestinal irritation, nausea, vomiting and diarrhea.

3. COMPOSITION / INFORMATION ON INGREDIENTS

Ingredients	Percentage (W/W)	LD50s and LC50s Route & Species:
Water 7732-18-5	Balance	Oral LD50 (Rat) >90 mL/kg
Citric acid 77-92-9	30-60	Not available.

Note: No additional remark.

4. FIRST AID MEASURES

Eye Contact: In case of contact, or suspected contact, immediately flush eyes with plenty of water for at least 15 minutes and get medical attention immediately after flushing.
Skin Contact: In case of contact, immediately flush skin with plenty of water for at least 15 minutes. Get medical attention. Remove contaminated clothing and launder before reuse.
Inhalation: Remove person to fresh air. If not breathing, give artificial respiration. If breathing is difficult, get immediate medical attention.
Ingestion: Do NOT induce vomiting. Never give anything by mouth to an unconscious or convulsing person. Seek immediate medical attention. If vomiting occurs spontaneously, keep head below hips to prevent aspiration of liquid into the lungs.
Notes to Physician: Treat symptomatically.

5. FIRE FIGHTING MEASURES

Flash Point: None.
Flash Point Method: Not applicable.
Autoignition Temperature: Not available.
Flammable Limits in Air (%): Not Available.
Extinguishing Media: Use extinguishing media appropriate for surrounding fire.
Special Exposure Hazards: Not flammable.
Hazardous Decomposition/Combustion Materials (under fire conditions): Not available.
Special Protective Equipment: Not applicable.
NFPA RATINGS FOR THIS PRODUCT ARE: HEALTH 1, FLAMMABILITY 0, INSTABILITY 0
HMIS RATINGS FOR THIS PRODUCT ARE: HEALTH 1, FLAMMABILITY 0, REACTIVITY 0

6. ACCIDENTAL RELEASE MEASURES

Personal Precautionary Measures: Wear appropriate protective equipment.
Environmental Precautionary Measures: Prevent from entering into soil, ditches, sewers, waterways and/or groundwater. Consult local authorities.
Procedure for Clean Up: Isolate hazard area and restrict access. Absorb with an inert dry material and place in an appropriate waste disposal container. Flush area with water to remove trace residue. Collect washings for disposal.

7. HANDLING AND STORAGE

Handling: Avoid breathing mist or vapor. Avoid contact with eyes, skin and clothing. Protect from freezing. Wash thoroughly after handling.
Storage: Store in a dry place away from excessive heat, in original or similar waterproof containers. Keep containers tightly closed. Store between 10°C (50°F) - 60°C (140°F).

8. EXPOSURE CONTROLS/PERSONAL PROTECTION

Engineering Controls:

Local exhaust ventilation as necessary to maintain exposures to within applicable limits.
Respiratory Protection: Not normally required if good ventilation is maintained. Avoid breathing mists or vapors.
Gloves:

Rubber gloves. Vinyl gloves.
Skin Protection: Skin contact should be prevented through the use of suitable protective clothing, gloves and footwear, selected for conditions of use and exposure potential. Consideration must be given both to durability as well as permeation resistance. Wear chemical resistant pants and jackets, preferably butyl or nitrile rubber.
Eyes: Safety glasses with side shields or chemical goggles.
Other Personal Protection Data: Ensure that eyewash stations and safety showers are proximal to the work-station location. Use good personal hygiene practices. Wash hands before eating, drinking, smoking, or using toilet facilities.

Ingredients	Exposure Limit - ACGIH	Exposure Limit - OSHA	Immediately Dangerous to Life or Health - IDLH
Water	Not available.	Not available.	Not Available.
Citric acid	Not available.	Not available.	Not Available.

9. PHYSICAL AND CHEMICAL PROPERTIES

Physical State: Liquid
Color: Clear Colorless
Odor: Essentially odorless to very slight sugar odor.
pH Not Available.
Specific Gravity: 1.24
Boiling Point: 104°C /219°F
Freezing/Melting Point: Not Available.
Vapor Pressure: 16 mmHg
Vapor Density: 0.62
% Volatile by Volume: 50%
Evaporation Rate: <1
Solubility: Completely miscible.
VOCs: Not Available.
Viscosity: Not Available.
Molecular Weight: 192.13
Other: Not Available.

10. STABILITY AND REACTIVITY

Chemical Stability: Stable.
Hazardous Polymerization: Will not occur.
Conditions to Avoid: None known.
Materials to Avoid: Carbon. Caustics.
Hazardous Decomposition Products: None known
Additional Information:

Solutions are mildly corrosive to carbon steel.

11. TOXICOLOGICAL INFORMATION

Principle Routes of Exposure

Ingestion: If large amounts of the product are ingested, symptoms may include gastrointestinal irritation, nausea, vomiting and diarrhea.
Skin Contact: Causes skin irritation. Resulting in stinging, reddening and swelling.
Inhalation: May cause irritation of the respiratory tract.
Eye Contact: Causes eye irritation. Resulting in stinging, reddening, tearing and swelling.

Additional Information: Pre-existing eye and skin disorders may be aggravated by exposure to this product.

Acute Test of Product:
Acute Oral LD50: Not Available.
Acute Dermal LD50: Not Available.
Acute Inhalation LC50: Not Available.

Carcinogenicity:

Ingredients	IARC - Carcinogens	ACGIH - Carcinogens
Water	Not listed.	Not listed.
Citric acid	Not listed.	Not listed.

Carcinogenicity Comment: No additional information available.

Reproductive Toxicity/ Teratogenicity/ Embryotoxicity/ Mutagenicity: Not Available.

12. ECOLOGICAL INFORMATION

Ecotoxicological Information:

Ingredients	Ecotoxicity - Fish Species Data	Acute Crustaceans Toxicity:	Ecotoxicity - Freshwater Algae Data
Water	Not Available.	Not Available.	Not Available.
Citric acid	LC50/96h/goldfish : 440-706 mg/l	Not Available.	Not Available.

Other Information:
No additional remark.

13. DISPOSAL CONSIDERATIONS

Disposal of Waste Method: Disposal of all wastes must be done in accordance with municipal, provincial and federal regulations.
Contaminated Packaging: Empty containers should be recycled or disposed of through an approved waste management facility.

14. TRANSPORT INFORMATION

DOT (U.S.):
DOT Shipping Name: CORROSIVE LIQUID, ACIDIC, ORGANIC, N.O.S. (CITRIC ACID)
DOT Hazardous Class 8
DOT UN Number: UN3265
DOT Packing Group: III
DOT Reportable Quantity (lbs): Not Available.
Note: No additional remark.
Marine Pollutant: No.

TDG (Canada):
TDG Shipping Name: CORROSIVE LIQUID, ACIDIC, ORGANIC, N.O.S. (CITRIC ACID)
Hazard Class: 8
UN Number: UN3265
Packing Group: III
Note: No additional remark.
Marine Pollutant: No.

15. REGULATORY INFORMATION

U.S. TSCA Inventory Status: All components of this product are either on the Toxic Substances Control Act (TSCA) Inventory List or exempt.

Canadian DSL Inventory Status: All components of this product are either on the Domestic Substances List (DSL), the Non-Domestic Substances List (NDSL) or exempt.

Note: Not available.

U.S. Regulatory Rules

Ingredients	CERCLA/SARA - Section 302:	SARA (311, 312) Hazard Class:	CERCLA/SARA - Section 313:
Water	Not Listed.	Not Listed.	Not Listed.
Citric acid	Not Listed.	Not Listed.	Not Listed.

California Proposition 65: Not Listed.
MA Right to Know List: Not Listed.
New Jersey Right-to-Know List: Not Listed.
Pennsylvania Right to Know List: Not Listed.

WHMIS Hazardous Class:
E CORROSIVE MATERIAL

16. OTHER INFORMATION

Additional Information: This product has been classified in accordance with the hazard criteria of the Canadian Controlled Products Regulations (CPR) and the MSDS contains all the information required by the CPR.

Disclaimer: NOTICE TO READER:
Univar, expressly disclaims all express or implied warranties of merchantability and fitness for a particular purpose, with respect to the product or information provided herein, and shall under no circumstances be liable for incidental or consequential damages.

Do not use ingredient information and/or ingredient percentages in this MSDS as a product specification. For product specification information refer to a Product Specification Sheet and/or a Certificate of Analysis. These can be obtained from your local Univar Sales Office.

All information appearing herein is based upon data obtained from the manufacturer and/or recognized technical sources. While the information is believed to be accurate, Univar makes no representations as to its accuracy or sufficiency. Conditions of use are beyond Univar's control and therefore users are responsible to verify this data under their own operating conditions to determine whether the product is suitable for their particular purposes and they assume all risks of their use, handling, and disposal of the product, or from the publication or use of, or reliance upon, information contained herein. This information relates only to the product designated herein, and does not relate to its use in combination with any other material or in any other process.

*****END OF MSDS*****

SECTION 8 - CONTROLS DOCUMENTATION

8.1 - PROCESS CONTROL NARRATIVE

I13

PROCESS AND CONTROL NARRATIVE

Meliadine STP

U65875-I13-0001,02

Katherine Scott
08/01/2016

TABLE OF CONTENTS

Table of Contents 1

Section 1 - Document Introduction 4

1.1 - Objectives of this Document 4

1.2 - Reference Documents 4

1.2.1 - Drawings 4

1.3 - Abbreviations 5

Section 2 - Process Description 6

2.1 - Equalization (EQ) System 6

2.2 - Fine Screen System 6

2.3 - Aerobic Biological Treatment 7

2.4 - Membrane Filtration 7

2.5 - Membrane Cleaning 8

2.6 - Treated Water System 8

2.7 - Sludge Handling 8

2.8 - Operational Flexibility 8

Section 3 - Controls Philosophy 10

3.1 - Introduction 10

3.1.1 - Equipment Control – HOA Control 10

3.1.2 - Train Operation 10

3.2 - Modes of Operation 11

3.3 - Operating Sequence Chart (OSC) 11

3.4 - Control System and Communication 13

3.4.1 - Programmable Logic Controller 13

3.4.2 - Distributed I/O 13

3.4.3 - Other Communications 13

Section 4 - Control Narrative 14

4.1 - Equalization (EQ) System 14

4.1.1 - Equalization System Equipment 14

4.1.1.1 - Equalization Pumps 15

4.1.1.2 - Equalization Blower 16
4.1.2 - Equalization System HMI Inputs 16
4.1.3 - Equalization System Alarms 16
4.2 - Fine Screen System 18
4.2.1 - Fine Screen System Equipment 18
4.2.1.1 - Fine Screens 19
4.2.1.2 - Sump Pumps 19
4.2.2 - Fine Screen System HMI Inputs 20
4.2.3 - Fine Screen System Alarms 21
4.3 - Aerobic Biological Treatment 22
4.3.1 - Aerobic Biological System Equipment 23
4.3.1.1 - Process Blowers 23
4.3.1.2 - Alkalinity Dosing Pumps 24
4.3.2 - Aerobic Biological System HMI Inputs 24
4.3.3 - Aerobic Biological System Alarms 25
4.4 - Membrane Filtration 27
4.4.1 - Membrane Filtration System Equipment 27
4.4.1.1 - Permeate Pumps 28
4.4.1.2 - Return Activated Sludge (RAS) Pumps 30
4.4.1.3 - Membrane Air Scour Blowers 30
4.4.1.4 - Ultraviolet System 30
4.4.2 - Membrane Filtration System HMI Inputs 30
4.4.3 - Membrane Filtration System Alarms 31
4.5 - Membrane Cleaning 34
4.5.1 - Membrane Cleaning Equipment 35
4.5.1.1 - Cleaning Chemical Dosing Pumps 35
4.5.2 - Membrane Cleaning HMI Inputs 36
4.5.3 - Membrane Cleaning Alarms 37
4.5.4 - Chemical Addition Chart 37
4.6 - Permeate Post-Treatment 39
4.7 - Sludge Handling System 43

4.7.1 - Sludge Handling System Equipment 44
4.7.1.1 - Sludge Blower 44
4.7.2 - Sludge Handling System HMI Inputs 44
4.7.3 - Sludge handling System Alarms 45

SECTION 1 - DOCUMENT INTRODUCTION

1.1 - OBJECTIVES OF THIS DOCUMENT

This process control narrative document presents sewage treatment system functions. It describes the specific system requirements in terms of functionality and control. The information in this document is necessary for proper and efficient operation of the system. It explains how the system runs through the different operating modes. This document should be read in tandem with the process and instrumentation diagrams (P&IDs), process flow diagram (PFD), general arrangement (GA) drawing and HMI operator interface. It should be noted that only the scope of work of H2O Innovation is explained in this document.

1.2 - REFERENCE DOCUMENTS

1.2.1 - DRAWINGS

DRAWING NUMBER	DRAWING NAME	NUMBER OF PAGES
U65875-C01-0001	LEGEND	1
U65875-C01-0190	FEED WATER EQUALIZATION	1
U65875-C01-0110	RAW WATER SCREENING	1
U65875-C01-0720	AEROBIC TANK	1
U65875-C01-0740	MEMBRANE FILTRATION	1
U65875-C01-0750	BLOWERS FOR MBR SYSTEM	2
U65875-C01-0790	PERMEATE TANK	1
U65875-C01-0800	DOSING SKIDS – CLEANING CHEMICALS	1
U65875-C01-0800	DOSING SKIDS – ALKALINITY	1
U65875-C01-0960	SLUDGE HANDLING SYSTEM	1

1.3 - ABBREVIATIONS

ABBREVIATIONS	DEFINITION
AUTO	Automatic Operation
BOD	Biological Oxygen Demand
CEB	Chemically Enhanced Backwash
CIP	Clean in Place
EQ	Equalization
GA	General Arrangement Drawing
HMI	Human Machine Interface
MBR	Membrane Bioreactor
MLSS	Mixed Liquor Suspended Solids
NaOCl	Sodium Hypochlorite
NH3	Ammonia
PFD	Process Flow Diagram
P&ID	Process & Instrumentation Diagram
PLC	Programmable Logic Controller
RAS	Return Activated Sludge
STP	Sewage Treatment Plant
TMP	Trans-Membrane Pressure
UV	Ultraviolet
VFD	Variable Frequency Drive
WAS	Waste Activated Sludge

SECTION 2 - PROCESS DESCRIPTION

The Sewage Treatment Plant (STP) is a membrane bioreactor (MBR) design, and will treat domestic sewage from the Agnico Meliadine Lake Mine in Nunavut. It will include equalization, fine screening, biological reactors with membrane filtration, and a sludge handling system. A process schematic, shown in Figure 1 below, illustrates the process flow of this system.

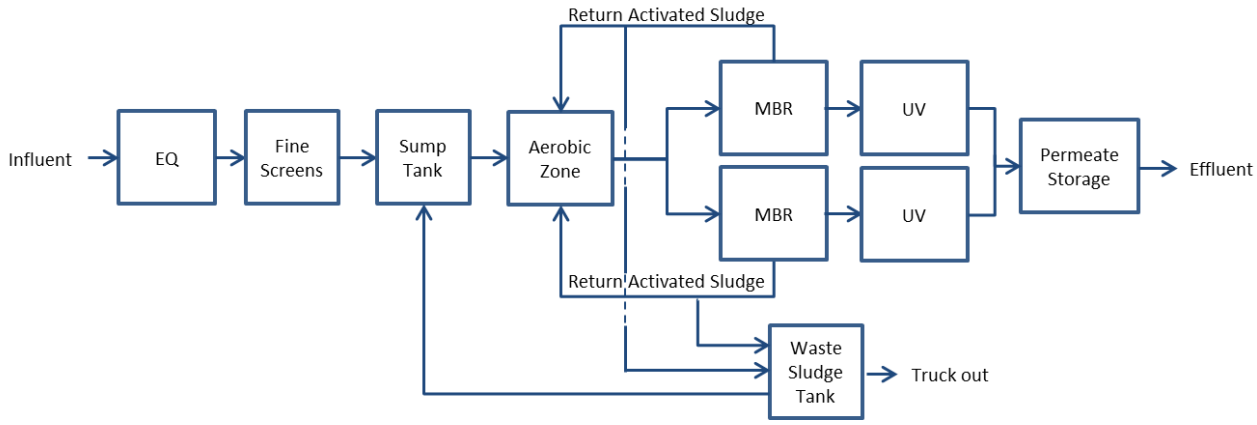

Figure 1 – Process Flow Schematic

The biological treatment system is designed to handle an average day flow rate of 216 m3/d. The system is comprised of a common equalization system with screening and biological treatment followed by two trains of membrane filtration. Trains are numbered 1 and 2. Waste sludge is sent to a single sludge holding tank before it is removed for disposal. The system is installed in above ground insulated tanks and ISO containers with associated mechanical and electrical equipment provided inside the containers.

2.1 - EQUALIZATION (EQ) SYSTEM

Feed is pumped (by others) to the equalization system, which is comprised of two aerated cylindrical tanks sized to handle the peak hour design volume of 106,200 L. The equalization tank provides a residence time sufficient to maintain steady flows to the biological treatment system during low and high flow periods. Equalized water is pumped via two equalization (EQ) pumps on variable frequency drives (VFDs) into a standpipe inside the second cylindrical tank and flows from that pipe by gravity to the fine screens inside Container 1.

2.2 - FINE SCREEN SYSTEM

Equalized wastewater flow to the fine screens by gravity. The fine screens are rotary drum screens with 2 mm perforated plate openings that automatically remove debris and trash. This protects the downstream processes and equipment. The fine screen operates continuously. Pressurized wash water

is used intermittently to clean the screens and screenings. Screened raw water falls by gravity from the screens into a sump, where the screened water is collected and pumped to the aerobic tank.

2.3 - AEROBIC BIOLOGICAL TREATMENT

The aerobic tank is a third cylindrical tank located outdoors. Aerobic biological treatment is the work-horse of any biological wastewater system. In this process, heterotrophic bacteria consume organic pollutants (BOD), oxygen and ammonia, and produce carbon dioxide, water and nitrate as well as reproducing to grow the bacteriological population. Fine bubble diffusers are installed in the bottom of the aerobic tank and process blowers continuously provide air to the diffusers. The air bubbling from the bottom of the tank imparts oxygen into the liquid phase to maintain a dissolved oxygen concentration of approximately 2 mg/L to satisfy the needs of the biomass. The bubbling is also used to keep the bacteria in suspension. The oxygenated mixed liquor suspended solids (MLSS) overflows into a standpipe inside the cylindrical tank and flows by gravity to the membrane filtration trains in Container 2.

2.4 - MEMBRANE FILTRATION

The activated sludge is split between the two membrane tanks that are located in Container 2. Membrane filtration is used to separate the bacteria from the water to keep them in the process at the desired concentration. Activated sludge is returned at a constant flow rate to the Aerobic Tank to prevent a build-up of sludge in the membrane tank. The Return Activated Sludge (RAS) is pumped by the RAS pumps at a flow rate 4 times greater than the design flow rate of the plant. In this manner the activated sludge is recirculated from the aerobic tank, to the membrane tank and back to the aerobic tank constantly at approximately 4 times the average feed flow rate.

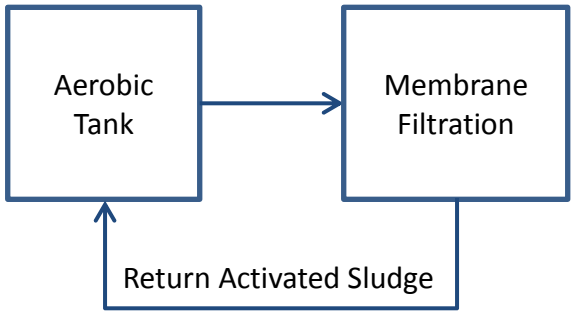

Figure 2 – Bioreactor Sludge Recirculation Set-up

The filtered liquid (called permeate) is pulled through the hollow-fiber membrane filters by the permeate pumps at a flow rate that matches the feed flow rate entering the aerobic tank to maintain a constant liquid level in the membrane tanks. From the permeate pumps, each membrane bioreactor train sends permeate through an inline ultraviolet (UV) disinfection system. The UV system operates continuously to kill any residual organisms remaining before it is sent to a common permeate storage

tank. The permeate tank acts as a reservoir for treated water that can be used for CEB and CIP processes.

2.5 - MEMBRANE CLEANING

To mitigate membrane fouling, several maintenance processes are performed:

1. Membrane Relax – membrane permeation is stopped for 1 minute after every 7 minutes of permeation.
2. Chemically Enhanced Backpulse (CEB) – membrane permeate flow is reversed to flow back into the membranes while cleaning chemical is added inline. This is done once per week.
3. Clean in Place (CIP) – a semi-annual process where a high concentration of chemical is used to restore permeability to the membranes. This is a combination of a reverse flow with chemical and a soak period.

2.6 - TREATED WATER SYSTEM

Permeate is transferred into the permeate tank, where it is then pumped by effluent pumps to a discharge location.

2.7 - SLUDGE HANDLING

Since bacteria within the STP continue to reproduce as they consume organics and nutrients, the concentration of biomass, measured as Mixed Liquor Suspended Solids (MLSS), increases with time. To maintain a steady MLSS in the bioreactors, some sludge must be removed (wasted) on a daily basis. Sludge is wasted by re-directing the RAS flow to the sludge storage tank, referred to as waste activated sludge (WAS). The sludge storage tank is aerated to maintain an aerobic biomass. The aeration can be turned off for a period of time to allow sludge to settle within the sludge tank and thicken by gravity. The supernatant that is left in the upper portion of the tank can be removed by opening a valve from the sludge tank, and allowing it to flow to the sump tank where it re-enters the treatment process. This operation (called decanting) reduces the volume of sludge that needs to be handled and extends the period of time that the sludge tank can be used before thickened sludge must be disposed of.

2.8 - OPERATIONAL FLEXIBILITY

The membrane portion of the sewage treatment system operates as two (2) separate trains. Therefore, if maintenance is required for any piece of equipment in the membrane system, the plant will continue to operate one train treating the full flow for short durations.

In the event of very low sewage production periods, a train can be taken completely offline by draining and flushing the system and filling the membrane tank with permeate since the membranes must be kept wet once they are commissioned.

SECTION 3 - CONTROLS PHILOSOPHY

3.1 - INTRODUCTION

The controls for the Meliadine STP are automated by a programmable logic controller (PLC) that functions based on a series of operating "modes". The PLC automatically moves the system between the different modes using triggers that are executed based on a variety of parameters such as tank level, pressure, dissolved oxygen and flow rate that are measured continuously by the instrumentation that is installed throughout the plant. Automated valves are actuated and equipment is turned on and off based on the modes and conditions at any given time.

3.1.1 - EQUIPMENT CONTROL – HOA CONTROL

All equipment can either be manually controlled or controlled by the PLC program. Each piece of equipment appears on the touch screen that acts as the Human Machine Interface (HMI). When the symbol for a piece of equipment such as a pump is touched, a pop-up screen appears allowing the operator to choose to override the AUTO setting to ON or OFF. If it is set to ON, the equipment will RUN and start operating irrespective of plant conditions. If it is set to OFF, the equipment will STOP, regardless of the current status of the plant. If it is set to AUTO, it will automatically operate in RUN and STOP based on the mode and conditional programming that has been established and is described in detail within this document.

The HOA screen for equipment with variable speed, such as a pump with a VFD, allows the operator to input a specific speed (0-100%) at which the equipment will operate when it is manually turned ON.

3.1.2 - TRAIN OPERATION

The two (2) membrane trains operate independently depending on their status at a given time. Each train operates based on the tank levels, flow rates and pressures of the particular train. When one train encounters a situation where it needs to stop operation, such as a cleaning or alarms that require it to stop, the feed from the aerobic tank continues to flow into a pipe that hydraulically connects both membrane tanks. As a result, even if one membrane train stops, the hydraulic connection causes all of the feed to flow to the other train to balance the membrane tank levels.

3.2 - MODES OF OPERATION

The controls system operates based on a number of modes as shown below:

MODE	DESCRIPTION
OFF	All process equipment is OFF with the exception of blowers to ensure the system remains aerobic.
PRODUCTION	Production mode occurs during normal operation when sewage is being sent to the EQ tanks. All process equipment operates based on the automatic control logic to provide treatment of sewage, as described below.
STANDBY	Standby mode occurs when the amount sewage being sent to the system is less than the system capacity such that the system must "wait" for adequate feed to continue operation.
CEB	CEB or "Chemically Enhanced Backpulse" is a weekly membrane maintenance process that sends cleaning agents to the membranes to mitigate membrane fouling
CIP	CIP or "Clean in Place" is a process designed to return the membranes to a near-clean state using a high chemical concentration and relatively long duration (4 hours). The process is conducted semi-annually as required.

3.3 - OPERATING SEQUENCE CHART (OSC)

The OSC shown below provides an overview of the status of the major equipment and valve positions for different operating modes and steps within each mode. It indicates for each operating mode whether equipment is in STOP, as indicated by an "X" or RUN/AUTO, as indicated by an "O".

Where a piece of equipment is assigned an "X" for a particular mode, it indicates that this equipment will always be in STOP during the associated mode. Where a piece of equipment is assigned an "O" for a particular mode, it indicates that this equipment will operate either continuously or based on a set of conditions. Since some equipment operates conditionally based on triggers, the "O" status indicates that this equipment will be subject to its conditional programming. For example, the Fine Screen is indicated as "O" during "Production" mode; however, it is programmed to only operate when the Feed Flow Rate is >0. Therefore, even though the system is in "Production" mode, if the Feed Flow Rate is zero, the Fine Screen will stop operating until the Feed Flow Rate >0.

		Common Equipment										Train Equipment				Valves									
	X - STOP O - AUTO (RUN/STOP)	EQ Pumps[1]	EQ Blower	Fine Screens[2]	Sump Pumps	Process Blowers	Alkalinity Dosing Pumps[3]	Hypochlorite Dosing Pump[4]	Citric Acid Dosing Pump[4]	Effluent Pumps	Sludge Blower	Permeate Pumps	RAS Pumps	Membrane Blowers	UV System	Wash Water Solenoid Valve (FV-11221)	TMP Control Valve (FV-31026)	Hypochlorite Dosing Valve[4] (FV-83798)	Citric Acid Dosing Valve[4] (FV-83598)	Permeate Inlet Valve (FV-79001)	CIP Inlet Valve (FV-79002)	Permeate Outlet Valve (FV-79098)	CIP Outlet Valve (FV-79099)	Membrane Tank Feed Valve (FV-74050)	Wasting Valve (FV-96001)
SYSTEM MODE	**OFF**	X	O	X	X	O	X	X	X	X	O	X	X	O	X	X	X	X	X	X	X	X	X	X	X
	Standby	O	O	O	O	O	O	X	X	X	O	X	O	O	X	O	X	X	X	O	X	X	X	O	X
	Production - Permeation	O	O	O	O	O	O	X	X	O	O	O	O	O	O	O	X	X	X	O	X	O	X	O	O
	Production - Relax	O	O	O	O	O	O	X	X	O	O	X	O	O	O	O	X	X	X	O	X	O	X	X	O
TRAIN MODE	**CEB - Initiate**	O	O	O	O	O	O	X	X	O	O	X	X	X	X	O	X	X	X	X	X	X	X	X	X
	CEB - Injection	O	O	O	O	O	O	O	O	O	O	O	X	X	X	O	O	O	O	X	O	X	O	X	X
	CEB - Soak	O	O	O	O	O	O	X	X	O	O	X	X	X	X	O	X	X	X	X	O	X	X	X	X
	CEB - Flush	O	O	O	O	O	O	X	X	O	O	O	O	O	X	O	O	X	X	X	O	X	O	X	X
	CEB - Finish	O	O	O	O	O	O	X	X	O	O	X	O	O	X	O	X	X	X	O	X	O	X	X	X
	CIP - Initiate	O	O	O	O	O	O	X	X	O	O	X	X	X	X	O	X	X	X	X	X	X	X	X	X
	CIP - Injection	O	O	O	O	O	O	O	O	O	O	O	X	X	X	O	O	O	O	X	O	X	O	X	X
	CIP - Soak	O	O	O	O	O	O	X	X	O	O	X	X	X	X	O	X	X	X	X	O	X	X	X	X
	CIP - Flush	O	O	O	O	O	O	X	X	O	O	O	O	O	X	O	O	X	X	X	O	X	O	X	X
	CIP - Finish	O	O	O	O	O	O	X	X	O	O	X	O	O	X	O	X	X	X	O	X	O	X	X	X

[1] EQ Pumps operate based on EQ Tank Level

[2] Fine Screens operate only when the EQ Pump Feed Flow Rate is >0

[3] Alkalinity Pumps operate based on a feedback loop from the pH Probe on the Aerobic Tank effluent

[4] During a CEB or CIP, *EITHER* the hypochlorite *OR* the citric acid will be initiated, depending on the type of clean selected. The two chemicals must never be mixed together to avoid the formation of poison gas.

3.4 - CONTROL SYSTEM AND COMMUNICATION

3.4.1 - PROGRAMMABLE LOGIC CONTROLLER

The system will be controlled by a Schneider Electric Modicon m340 or m580 Processor, and the HMI will operate on a Wonderware interface.

3.4.2 - DISTRIBUTED I/O

Schneider IO will be used for the I/O in each container. The local instruments and valves will be wired to the corresponding local I/O junction box.

3.4.3 - OTHER COMMUNICATIONS

Ethernet/IP will be used for the communication between the PLC and the local IO blocks. Ethernet/IP will also be used for the communication between the PLC and the local HMI screen and also the VFDs.

SECTION 4 - CONTROL NARRATIVE

4.1 - EQUALIZATION (EQ) SYSTEM

Domestic sewage is sent by lift pumps through a Raw Feed Flowmeter (FIT-11274) to the STP. The equalization system suppresses variability in feed flow to the treatment plant. The two (2) EQ Tanks (T-19000A/B) are hydraulically connected in series and combined have sufficient volume to handle the expected variability in feed flow. The equalization tanks fill and empty as sewage production varies, but send a relatively consistent flow forward to the downstream processes.

An Equalization Blower (B-75000) provides air to both EQ Tanks to maintain an aerobic environment and provide mixing. Air is distributed through Coarse Bubble Diffusers (CBD-19086) installed in the EQ Tanks.

The EQ Pumps (P-19200A/B) are submersible pumps installed on the bottom of the second cylindrical EQ tank that are used to transport equalized sewage from the EQ Tank, through the equalized feed flowmeter (FIT-19274) and into the Fine Screens (SCR-11200A/B). Each EQ pump can handle the full flow to the plant so that when one EQ pump is offline the other can continue to supply the STP with equalized flow.

4.1.1 - EQUALIZATION SYSTEM EQUIPMENT

ÉQUIPMENT	TAGS	QTY	DESIGN VALUE	NOTES
Raw Feed Flowmeter	FIT-11274	1	0-110 m3/hr	Loose shipped, measures the instantaneous flow to the plant and totalizes the daily flow [1]
EQ Tanks	T-19000A/B	2	Volume = 63 m3 each	Cylindrical tank
Equalization Blower	B-75000	1	680 m^3/h @ 6.5 m H_2O	One for both tanks
Coarse Bubble Diffusers	CBD-19086A1/A4 CBD-19086B1/B4	8	n/a	
EQ Level Sensors	LT-19060A/B	2	0-7 m H_2O	One per tank

EQ Pumps	P-19200A/B	2	9 m^3/hr each	VFD controlled
Equalized Feed Flowmeter	FIT-19274	1	0 - 25 m3/hr	Measures the equalized flow to the plant

[1]HMI should display the previous day's total flow as measured through the raw feed flowmeter as well as the cumulative flow from the current day (since midnight).

4.1.1.1 - EQUALIZATION PUMPS

When the STP system is in PRODUCTION mode or STANDBY mode, the EQ Pumps will operate based on the commands given from the PLC. The EQ Pumps operate on VFDs to allow their speeds to be adjusted to meet different Flow Rate Set-Points. These Flow Rate Set-Points are met using a PID loop to adjust the pump speed based on the measured flow of the Equalized Feed Flow Meter (FIT-19274). The EQ Pump status and Flow Rate Set-Points are determined in response to the EQ Level Sensors (LT-19060A/B) as follows:

EQ TANK LEVEL	DESCRIPTION	NOTES
Below LoLo Level Set-Point in Tank 2	STOP EQ Pumps	This protects the EQ Pumps from running dry. LoLo Alert is shown on PLC.
Between Lo Level and HiHi Level Set-Points in Tank 2	RUN EQ Pump; system enters PRODUCTION mode. Equalized Feed Flowrate = "Flow Set-Point"	The "Flow Set-Point" is 9 m3/hr; however, the operator can change this value to prevent intermittent operation during times with low sewage production
Above HiHi Level Set-Point in Tank 2	RUN EQ Pump. Equalized Feed Flowrate = "Flow Set-Point"	When the EQ Tank level increases to the HiHi Level Set-Point, a critical alarm occurs, but the pump continues to run at the same set-point.

Note: EQ Pump operation should alternate between EQ Pump A and EQ Pump B every 24 hours unless a Pump Fault indicates otherwise.

In the event of a level transmitter failure in EQ Tank 2, the level transmitter in EQ Tank 1 will be used. This mode is for emergency purposes only; it is imperative that the EQ Tank 2 level transmitter be repaired as soon as possible to resume normal plant control and operation. This is important because in the event of a line freeze or blockage between EQ Tank 1 and 2, both transmitters need to be functioning in order to identify the differing tank levels and correct the problem quickly.

4.1.1.2 - EQUALIZATION BLOWER

The Equalization Blower is used to supply oxygen to both Equalization Tanks to maintain an aerobic environment and provide mixing. One blower is supplied for both tanks. Under normal conditions, the blower will always be in RUN.

4.1.2 - EQUALIZATION SYSTEM HMI INPUTS

The following values are input on the HMI and can be adjusted to optimize system operation.

HMI INPUT	INITIAL VALUE
Raw Feed Flow Rate - Lo Set-Point	1 m3/hr
Raw Feed Flow Rate - Hi Set-Point	106 m3/hr
EQ Tank 1/2 Level – LoLo Set-Point	0.8 m
EQ Tank 1/2 Level - Lo Set-Point	1.0 m
EQ Tank 1/2 Level - Hi Set-Point	4.0 m
EQ Tank 1/2 Level - HiHi Set-Point	6.0 m
Equalized Feed Flow Set-Point	9 m3/hr
Equalized Feed Flow Rate - LoLo Set-Point	1 m3/hr

4.1.3 - EQUALIZATION SYSTEM ALARMS

ALARM OR ALERT	DESCRIPTION	ACTION
Raw Feed Flow Rate - Lo	Occurs if the raw feed flow rate is lower than the Lo setpoint	No Action
Raw Feed Flow Rate - Hi	Occurs if the raw feed flow rate is higher than the Hi setpoint	Alert: “Raw Feed Flow Rate – Hi”
Raw Feed Flowmeter Fault	Occurs if the raw feed flowmeter returns non 4-20 mA signal	Alert: “Raw Feed Flowmeter Fault”
EQ Blower Fault	Occurs if EQ blower returns a non 4-20 mA signal	Alert: “EQ Blower Fault” Alert operator to repair or replace blower as soon as possible
EQ Tank 1 Level – LoLo	Occurs when EQ Tank 1 level drops below the LoLo Level Set-Point	Alert: “EQ Tank 1 - Level LoLo”
EQ Tank 1 Level – Lo	Occurs when EQ Tank 1 level drops below the Lo Level Set-Point	No Action

EQ Tank 1 Level - Hi	Occurs when EQ Tank 1 level rises above Hi Level Set-Point	Alert: "EQ Tank 1 - Level Hi" (No Action)
EQ Tank 1 Level - HiHi	Occurs when EQ Tank 1 level rises above HiHi Level Set-Point	Critical Alarm: "EQ Tank 1 – Level HiHi" (No Action) Note that an emergency overflow is installed on both EQ tanks that will allow a controlled overflow in case of emergencies.
EQ Tank 1 Level Sensor Fault	Occurs if the transmitter returns non 4-20 mA signal	Critical Alarm: "EQ Tank 1 – Level Sensor Fault" Use levels from EQ Tank 2 Level Sensor until EQ Tank 1 Level Sensor Fault cleared
EQ Tank 2 Level – LoLo	Occurs when EQ Tank 2 level drops below the LoLo Level Set-Point	Alert: "EQ Tank 2 - Level LoLo" STOP EQ pumps
EQ Tank 2 Level – Lo	Occurs when EQ Tank 2 level reaches the Lo Level Set-Point	No Alert/Alarm Put EQ Pumps in RUN if they are in STOP; system enters PRODUCTION mode
EQ Tank 2 Level - Hi	Occurs when EQ Tank 2 level rises above Hi Level Set-Point	Alert: "EQ Tank 2 - Level Hi" (No Action)
EQ Tank 2 Level - HiHi	Occurs when EQ Tank 2 level rises above HiHi Level Set-Point	Critical Alarm: "EQ Tank 2 – Level HiHi" (No Action) Note that an emergency overflow is installed on both EQ tanks that will allow a controlled overflow in case of emergencies.
EQ Tank 2 Level Sensor Fault	Occurs if the transmitter returns non 4-20 mA signal	Critical Alarm: "EQ Tank 2 – Level Sensor Fault" Use levels from EQ Tank 1 Level Sensor until EQ Tank2 Level Sensor Fault cleared
EQ Pump A Fault	Indicates mechanical failure of EQ Pump A	Alert: "EQ Pump A Fault" Turn EQ Pump A to OFF and switch operation to EQ Pump B
EQ Pump B Fault	Indicates mechanical failure of EQ Pump B	Alert: "EQ Pump B Fault" Turn EQ Pump B to OFF and switch operation to EQ Pump A
Equalized Feed Flow Rate - LoLo	Occurs when EQ Pump is ON and FIT-19274 reads less than the	Alarm: "Equalized Feed Flow Rate LoLo"

	Equalized Feed LoLo Set-Point	Turn OFF EQ Pumps – this indicates a possible broken pipe or clogged pipe/pump. Operator must repair immediately.
Equalized Feed Flowmeter Fault	Occurs if the flowmeter returns non 4-20 mA signal	Alarm: "Equalized Feed Flowmeter Fault" Continue EQ Pump operation at last setpoint for VFD and continue Fine Screen operation until Fault is cleared

4.2 - FINE SCREEN SYSTEM

The equalized sewage flows through the Fine Screens (SCR-11200A/B) to remove hair, trash and debris that can have a detrimental effect on downstream processes. The fine screens are automatic and flushing water is intermittently used to clean the screens to prevent excessive accumulation of debris on the screen holes. The frequency and duration of cleans are controlled by timers on solenoid valves that send wash water to the screens, and can be adjusted by the operator at the HMI. Once the sewage passes through the screen it falls into the Sump Tank for Screened Water (T-12000) by gravity. Screenings that are removed by the screen are washed, compacted and automatically sent to a trash receptacle (T-11800), which must be emptied and the trash disposed of on a daily basis. Screened water is pumped by the Sump Pumps (P-12200A/B) to the Aerobic Tank.

4.2.1 - FINE SCREEN SYSTEM EQUIPMENT

ÉQUIPMENT	TAGS	QTY	DESIGN VALUE	NOTES
Fine Screens	SCR-11200	2	N/A	Duty/standby configuration, both operate when the Feed Flow to the Screens > 0, and continue to operate for a set time after the signal ends
Fine Screen Wash Water Solenoid Valve	FV-11221	1	N/A	Only operates on cycle when the Fine Screens are running
Fine Screen Trash Basket	T-11800	1	N/A	Must be emptied daily by the operator

Sump for Screened Water	T-12000	1	4 m3	
Sump Pumps	P-12200A/B	2	9 m3/hr each	Duty/standby configuration
Sump Level Sensor	LT-12060	1	0 – 20 kPa (0 – 1.2 m)	
Screened Water pH Sensor	AIT-11094	1	pH: 0 - 14	
Screened Water Flowmeter	FIT-12274	1	0 - 25 m3/hr	Measures the screened flow to the plant

4.2.1.1 - FINE SCREENS

When the system is in PRODUCTION or STANDBY mode, the screens will be in AUTO. The screens only RUN when there is feed to them as measured by the equalized feed flow meter (FIT-19274). The screen auger will continue to run for the set time (T1) after the signal ends.

The screen/press shower will run on cycle whenever the auger is operating. The wash water shower will cycle on and off and can be adjusted by timer for cycle length and duration of shower. The shower will operate a minimum of once per day to keep the plug moist. A typical cycle is on for 5-20 seconds and then off for 30-200 seconds (i.e., cycle length of 35-220 seconds, and duration of wash for 5-20 seconds).

4.2.1.2 - SUMP PUMPS

When the STP system is in PRODUCTION or STANDBY mode, the Sump Pumps will operate based on the level in the Sump Tank. The Sump Pumps are each set up to operate at the design flow rate of the plant. This flow can be monitored using the screened water flowmeter (FIT-12274).

Under normal operation, one pump will operate. In the event of an upset where the Sump Tank level increases, an emergency backup is available to prevent overflowing inside the container. If the Sump Tank level reaches the “HiHi” level, the second Sump Pump will RUN to increase the flow through the system. Once the Sump Tank level falls below the “LoLo” level, both Sump Pumps will turn OFF. When the level increases again the system will return to operation as normal with one pump running.

The Sump Pump status and Flow Rates are determined in response to the Sump Tank Level Sensor (LT-12060) as follows:

SUMP LEVEL	DESCRIPTION	NOTES
Below LoLo Level Set-Point	STOP Sump Pumps	This protects the Sump Pumps from running dry.
Between LoLo Level and HiHi Level Set-Points	RUN Sump Pump.	During normal operation a single Sump Pump is in RUN and the flow rate should be adjusted to 9 m3/hr to match the Equalized Feed Flow Set-Point. The operator can manually adjust the flow if desired to meet specific plant needs.
Above HiHi Level Set-Point	RUN both Sump Pumps.	When the Sump Tank level increases to the HiHi Level Set-Point, a critical alarm occurs and the second Sump Pump will RUN. The EQ pumps will also be turned to STOP to prevent additional water from entering the Sump Tank. Both pumps will continue to RUN until the Sump Tank level drops to the Hi Level Set-Point. With both pumps running, the total flow rate will be approximately 18 m3/hr. Note that an emergency overflow is installed on the Sump tank that will allow a controlled overflow out of the container in case of emergencies.

Note: Sump Pump operation should alternate between Sump Pump A and Sump Pump B every 24 hours unless a Pump Fault indicates otherwise.

4.2.2 - FINE SCREEN SYSTEM HMI INPUTS

The following values are input on the HMI and can be adjusted to optimize system operation.

HMI INPUT	INITIAL VALUE
Fine Screen Auger Timer (T1)	2 minutes
Fine Screen Washwater Timer	200 seconds
Fine Screen Washwater Duration	10 seconds
Sump Tank Level – LoLo Set-Point	0.3 m
Sump Tank Level – HiHi Set-Point	3.6 m

Screened Water pH - Lo Set-Point	6.0
Screened Water pH - Hi Set-Point	8.0
Screened Water Flow Rate - LoLo Set-Point	1 m3/hr

4.2.3 - FINE SCREEN SYSTEM ALARMS

ALARM OR ALERT	DESCRIPTION	ACTION
Fine Screen A Fault	Indicates that fine screen may not be operating properly	Alert: "Fine Screen A Fault – divert flow to Fine Screen B"
Fine Screen B Fault	Indicates that fine screen may not be operating properly	Alert: "Fine Screen B Fault – divert flow to Fine Screen A"
Sump Pump A Fault	Indicates mechanical failure of Sump Pump A	Alert: "Sump Pump A Fault" Turn Sump Pump A to OFF and switch operation to Sump Pump B
Sump Pump B Fault	Indicates mechanical failure of Sump Pump B	Alert: "Sump Pump B Fault" Turn Sump Pump B to OFF and switch operation to Sump Pump A
Screened Water Flow Rate - LoLo	Occurs when Sump Pumps are ON and FIT-12274 reads less than the Screened Water Flow Rate LoLo Set-Point	Alarm: "Screened Water Flow Rate LoLo" STOP Sump Pumps – this indicates a possible broken pipe or clogged pipe/pump. Also STOP EQ Pumps to prevent overflow in the container.
Sump Tank Level – LoLo	Occurs when Sump Tank level drops below the LoLo Level Set-Point	Alert: "Sump Tank - Level LoLo" STOP Sump Pumps
Sump Tank Level - HiHi	Occurs when Sump Tank level rises above HiHi Level Set-Point	Critical Alarm: "Sump Tank – Level HiHi" RUN both Sump Pumps in tandem and STOP EQ Pumps until Tank Level drops below the Hi Level Set-Point Note that an

		emergency overflow is installed on the Sump Tank that will allow a controlled overflow out of the container in case of emergencies.
Sump Tank Level Sensor Fault	Occurs if the transmitter returns non 4-20 mA signal	Critical Alarm: "Sump Pump – Level Sensor Fault" Continue Sump Pump in RUN until Level Sensor Fault cleared
Screened Water pH - Lo	Indicates pH is below the pH Lo Set-Point	Alert: "Screened Water pH Lo"
Screened Water pH - Hi	Indicates pH is above the pH Hi Set-Point	Alert: "Screened Water pH Hi"
Screened Water pH Sensor Fault	Occurs when sensor returns non 4-20 mA signal	Alert: "Screened Water pH Sensor Fault"
Screened Water Flowmeter Fault	Occurs if the flowmeter returns non 4-20 mA signal	Alarm: "Screened Water Flowmeter Fault" Continue Sump Pump in RUN

* If a "Fine Screen Fault" occurs and the screen stops operating properly, the Fine Screen will eventually blind with debris and the portion of feed flow entering that screen will overflow and bypass that screen. The operator must manually isolate the faulted screen to repair/replace it, while the remaining screen continues to operate. Each fine screen is sized to handle the full plant flow; however, a faulted screen must be repaired as soon as possible in order to ensure that downstream equipment is not affected.

4.3 - AEROBIC BIOLOGICAL TREATMENT

Screened sewage enters the Aerobic Tank (T-73000) where it is mixed with Return Activated Sludge (RAS) pumped from the Membrane Tanks (T-74000-1/2). The combined mixture called "Mixed Liquor" or "Activated Sludge" travels through the Aerobic Tank and overflows into a standpipe, where it falls by gravity into a downcomer pipe that splits into 2 lines that enter into each Membrane Tank.

The purpose of the aerobic biological treatment is to provide a residence time within which the mixed liquor encounters a dissolved oxygen concentration above 1 mg/L. This allows heterotrophic bacteria to consume organics and ammonia and convert them to carbon dioxide and nitrate. During this biological process the bacteria also consume oxygen and produce more bacteria. Oxygen supply is provided by pumping air from the Process Blowers (B-75240A/B) through the Fine Bubble Diffusers (FBD-73086) and into the mixed liquor in the Aerobic Tank. The Dissolved Oxygen (DO) concentration is continuously

measured by the DO sensor (AE-73094), and the pH and temperature are continuously monitored by the pH/Temperature Sensor (AIT-72093).

4.3.1 - AEROBIC BIOLOGICAL SYSTEM EQUIPMENT

ÉQUIPMENT	TAGS	QTY	DESIGN VALUE	NOTES
Aerobic Tank	T-73000	1	Volume = 63 m3	Cylindrical Tank
Process Blowers	B-75240A/B	2	153 m3/hr at 6.5 m H_2O	Duty/standby configuration
Blower Air Mass Flowmeter	FIT-75274	1	0-200 m^3/hr	
Fine Bubble Diffusers	FBD-73086	1	N/A	
Aerobic Tank Level Sensor	LT-73060	1	0 – 7 m	
Alkalinity Dosing Pumps	P-80100	2	0.18 m3/d each	Dosing will automatically be adjusted by the PLC to ensure adequate buffering is available in the water to achieve the target pH range
pH/Temp Sensor	AIT-72093	1	pH: 0-14 Temp: 0-50°C	Design value is pH 6-8
DO Sensor	AIT-72094	1	O2: 0-10 mg/L	Design value is 2 mg/L

4.3.1.1 - PROCESS BLOWERS

The Process Blowers are used to supply oxygen to the biomass in the Aerobic Tank. Two Process Blowers are supplied for the aerobic tank in a duty/standby configuration, so that if one blower goes offline the other one will automatically switch to RUN. This redundancy is included because the aerobic treatment process is a critical operation and the blowers must satisfy the oxygen requirement for a given BOD and NH3 loading rate. Under normal conditions, the air supply to a train will always RUN in order to provide oxygen to the bacterial population. If the

DO concentration drops below 1 mg/L the second blower will come on to supplement the air supply.

4.3.1.2 - ALKALINITY DOSING PUMPS

The dosing of sodium hydroxide is used to add alkalinity to the wastewater treatment system to satisfy the alkalinity requirements of the nitrification process where ammonia (NH3) is converted to nitrate (NO3). Alkalinity also serves to buffer the wastewater and prevent pH swings.

The Alkalinity Dosing Pumps (P-80100) transport sodium hydroxide into the RAS lines where it is mixed and sent to the Aerobic Tank. The dosing pumps will RUN when the pH drops below the Lo pH Set-Point until the pH increases to the Hi pH Set-Point. The dosing rate will be constant and can be adjusted by the operator manually.

When the system is in Production mode, the Alkalinity Dosing Pump will be in RUN. The actual stroke length of the Alkalinity Dosing Pumps remains constant (set up during commissioning).

4.3.2 - AEROBIC BIOLOGICAL SYSTEM HMI INPUTS

The following values are input on the HMI and can be adjusted to optimize system operation.

HMI INPUT	INITIAL VALUE
pH LoLo – Set-Point	6.0
pH Lo – Set-Point	6.5
pH Hi – Set-Point	7.0
pH HiHi – Set-Point	8.0
DO Lo – Set-Point	1.0
Aerobic Tank Level Set-Point	5.8 m
Aerobic Tank Level – LoLo Set-Point	5.4 m
Aerobic Tank Level - Lo Set-Point	5.6 m
Aerobic Tank Level - Hi Set-Point	5.9 m
Aerobic Tank Level - HiHi Set-Point	6.0 m
Process Blower Flow Rate Set-Point	153 m^3/h
Process Blower Flow Rate Lo Set-Point	50 m^3/h

Alkalinity Dosing Rate – Set-Point	100% stroke length
Alkalinity Tank Level – Lo Set-Point	Set in field

4.3.3 - AEROBIC BIOLOGICAL SYSTEM ALARMS

ALARM OR ALERT	DESCRIPTION	ACTION
Aerobic Tank Level Sensor Fault	Occurs when level sensor returns non 4-20 mA signal	Alert: "Aerobic Tank Level Sensor Fault"
Aerobic Tank Level - Hi	Occurs when aerobic tank level rises above Hi Level Set-Point	Alert: "Aerobic Tank Level Hi"
Aerobic Tank Level - HiHi	Occurs when aerobic tank level rises above HiHi Level Set-Point	Alarm: "Aerobic Tank Level HiHi" Pipe to Membrane Tanks may be clogged or frozen. STOP EQ Pumps. Note that an emergency overflow is installed on the Aerobic Tank that will allow a controlled overflow in case of emergencies.
Aerobic Tank Level - Lo	Occurs when aerobic tank level drops below the Lo Level Set-Point	Alert: "Aerobic Tank Level Lo"
Aerobic Tank Level – LoLo	Occurs when aerobic tank level drops below the LoLo Level Set-Point	Alarm: "Aerobic Tank Level LoLo" Tank may be leaking; Alert operator to investigate immediately. STOP EQ Pumps.
Aerobic Tank pH - Lo	Indicates pH has dropped below the pH Lo Set-Point	Alert: "Aerobic Tank pH Lo, adjust Alkalinity Dosing Rate"
Aerobic Tank pH - Hi	Indicates pH has increased above the pH Hi Set-Point	Alert: "Aerobic Tank pH Hi, adjust Alkalinity Dosing Rate"
Aerobic Tank pH / Temperature Sensor Fault	Occurs when sensor returns non 4-20 mA signal	Alert: "Aerobic Tank pH / Temperature Sensor Fault"
Process Blower A Fault	Indicates a mechanical failure of Process Blower A	Alarm: "Process Blower A Fault; switch to Process Blower B"
Process Blower B Fault	Indicates a mechanical failure of Process Blower B	Alarm: "Process Blower B Fault; switch to Process Blower A"

Process Blower Flow Rate Lo	Occurs when Process Blower is in RUN and FIT-75274 reads an airflow rate lower than the Process Blower Flow Rate Lo Set-Point	Alert: “Process Blower Flow Rate Lo” Operator to investigate immediately; line may be broken or clogged
Alkalinity Dosing Pump Fault	Indicates a mechanical failure of the Alkalinity Dosing Pump	Alert: “Alkalinity Dosing Pump Fault” Switch to Backup Dosing Pump (installed on same skid)
Alkalinity Tank Level Lo	Occurs when alkalinity day tank level drops below Lo Level Set-Point	Critical Alarm: “Refill chemical tank for alkalinity adjustment”

4.4 - MEMBRANE FILTRATION

Mixed liquor flows by gravity from the Aerobic Tank (T-73000) into the Membrane Tanks (T-74000). Within each Membrane Tank, the Membrane Module (F-74000) filters the mixed liquor. The membranes have tiny pores (0.4µm) that prevent solids from entering the permeate side of the membrane, but allow the passage of water. Permeation occurs during the PRODUCTION mode at a rate that is, on average, equal to the feed flow rate to the train to prevent accumulation of liquid in the Aerobic Tank and Membrane Tanks.

To prevent solids accumulation on the surface of the membranes, membranes permeate for a period of time followed by a "Relax" step where permeation is stopped for a short period of time. The default cycle includes a 7 minute Permeation period followed by a 1 minute Relax period. During Production and Standby, a Membrane Air Scour Blower (B-75400) provides air to the integrated coarse bubble diffusers to provide air scouring and reduce sludge buildup on the membrane fibers.

To prevent excessive solids accumulation within the Membrane Tank, the mixed liquor is returned to the Aerobic Tank via the RAS pumps (P-74600). The MLSS concentration shall be maintained by daily wasting of MLSS to remove bacteria from the system at the same rate at which they grow. The required daily wasting volume can be estimated by comparing the MLSS measurements taken during sampling with the target MLSS concentration. Biological growth varies with a number of factors and, as the system is operated, a steady state growth will occur, leading to the development of a consistent sludge wasting volume. The daily wasting volume shall be calculated and a "suggested wasting volume" shall be updated within the Sludge Wasting Screen on the HMI. The operator can then choose to manually adjust the daily wasting volume once the need for adjustment is confirmed. This is to prevent improper wasting due to erroneous MLSS concentration measurements. The calculation for "suggested wasting volume" is given in Section 4.7.

4.4.1 - MEMBRANE FILTRATION SYSTEM EQUIPMENT

ÉQUIPMENT	TAGS	QTY	DESIGN VALUE	NOTES
Membrane Tank	T-74000	2	6.6 m^3 each	
Membrane Module	F-74000	2 (1 per train)	900 m2 450 m2 per module	
Membrane System Blower	B-75400	2	254 m^3/h per train	
Blower Air Mass Flowmeter	FIT-75474	2	0 – 300 m^3/h	

Permeate Pumps	P-79000	2	4.5 m3/hr	Timer required to monitor permeate/relax cycles
Permeate Flow Meter	FIT-79074	2	0-15 m^3/hr	
Membrane Tank Level Sensor	LT-74060	2	0 – 3.0 m	
Permeate Pressure Sensor	PT-79045	2	-100 to 100 kPa	
RAS Pumps	P-74600	2	18 m^3/hr	RAS pump also used for wasting sludge and draining the system
RAS Flow Meter	FIT-74674	2	0-25 m^3/hr	
UV System	UV-91000	2		inline

4.4.1.1 - PERMEATE PUMPS

The Permeate Pumps (P-79000) are used to transport filtered water (permeate) from the Membrane Tank (T-74000) through the Membrane Module (F-74000), through the Permeate Flow Meter (FIT-79074), to the UV Disinfection system (UV-91000) and finally to the Permeate Tank (T-79200). The pumps are equipped with VFDs so that they can control the flow rate of membrane filtration. The speed of the permeate pumps is adjusted to achieve the desired permeate flow rate.

The permeate pumps are also used to transport treated water back to the membranes during CEB and CIP events by actuating valves on the permeate lines to change the direction of flow.

PRODUCTION AND STANDBY MODE

During PRODUCTION mode the Permeate Pump cycles between RUN and STOP to accommodate the required “permeation” and “relax” steps. In normal operation the permeation step duration is 7 minutes and the relax step duration is 1 minute. The status (Permeation/Relax/Standby) as well as a timer showing the time left within a permeation or relax step will be displayed on the HMI.

During the permeation step, the PLC adjusts the Permeate Pump speed using a cascade PID loop with the pump VFD and permeate flow meter to maintain the Membrane Tank Level Set-Point.

The Process goes in to STANDBY mode when the Membrane Tank – Lo Level Set-Point is reached. This generally occurs where there is insufficient feed to the system. The process will return to PRODUCTION when the Membrane Tank Level reaches the Membrane Tank Level Set-Point.

Trans-Membrane Pressure (TMP)

The TMP is a measure of the degree of fouling that the membranes have experienced. It allows monitoring of changes in membrane permeability as a function of time to provide information on CEB and CIP performance and changes in feed water quality. The TMP is the change in pressure across the membrane and is calculated based on the membrane feed-side hydrostatic pressure minus the permeate-side pressure during permeation. It is calculated as the permeate-side pressure minus the feed side pressure during backward flow.

$$TMP\ (kPa) = Feed\ Pressure - Permeate\ Pressure$$

and

$$TMP_{CLEAN}\ (kPa) = Permeate\ Pressure - Feed\ Pressure$$

where,

$$Feed\ Pressure\ (kPa) = [Membrane\ Tank\ Level\ (m) - Midlevel\ of\ Membrane\ (m)] \times \frac{9.807\ kPa}{m\ H2O}$$

and

$$\begin{aligned} Permeate\ Pressure\ (kPa) \\ = Permeate\ Pressure\ Reading\ (kPa) \\ + \Big\{[Level\ of\ Pressure\ Transducer\ Installation\ (m) \\ - Midlevel\ of\ Membrane\ (m)] \times \frac{9.807\ kPa}{m\ H2O}\Big\} \end{aligned}$$

note that the "Midlevel of Membrane" and "Level of Pressure Transducer Installation" values are measured from the bottom of the membrane tank.

Flux and Permeability

The permeability is a calculated parameter that normalizes the TMP for different flow rates. The flow rate per unit membrane area is called the "Membrane Flux" and it is calculated based on the equation below:

$$Flux\ \left(\frac{L}{m^2 h}\right) or\ (Lmh) = \frac{Flow\ Rate\ \left(\frac{L}{min}\right) \times 60\left(\frac{min}{h}\right)}{Membrane\ Area\ (m^2)}$$

The permeability is the flux divided by the TMP as given below:

$$Permeability\ (Lmh/bar) = \frac{Flux\ (Lmh)}{TMP\ (kPa)}$$

Finally, to ensure accurate monitoring of permeability, the calculated permeability should be corrected for temperature. The following equation can be used to correct the permeability for temperature:

$$Permeability_{20^{\circ}C} = Permeability_{T^{\circ}C} \times 1.024^{(T-20)}$$

where T = the measured temperature.

4.4.1.2 - RETURN ACTIVATED SLUDGE (RAS) PUMPS

The RAS pumps are used to return solids from the Membrane Tanks to the front end of the Aerobic Tank. This ensures that the biomass separated from the liquid during membrane filtration does not accumulate excessively within the Membrane Tank.

When the MBR train associated with a RAS Pump is in PRODUCTION mode or STANDBY mode, the RAS Pump will RUN. The RAS Pump Flowrate is adjustable by manually throttling the RAS Pump isolation valve.

4.4.1.3 - MEMBRANE AIR SCOUR BLOWERS

The Membrane Air Scour Blowers are used to scour the membranes and reduce sludge buildup on the fibers. One blower is supplied per membrane tank. Under normal conditions, the blowers will always be in RUN.

4.4.1.4 - ULTRAVIOLET SYSTEM

The UV disinfection system operates continuously in all modes other than OFF to provide disinfection of permeate before it enters the Permeate Tank. The PLC has a counter that totalizes the total time that the UV unit operates and provides an Alert when the bulb life nears its expected design period. This warning occurs after 8,760 hours (1 year) of operation and the bulbs should be replaced on an annual basis.

4.4.2 - MEMBRANE FILTRATION SYSTEM HMI INPUTS

HMI INPUT	INITIAL VALUE
Production Mode: Permeate Cycle	7 minutes
Production Mode: Relax Cycle	1 minute
Membrane Tank Level Set-Point	1.90 m

Membrane Tank Level LoLo Set-Point	1.70 m
Membrane Tank Level Lo Set-Point	1.80 m
Membrane Tank Level Hi Set-Point	2.00 m
Membrane Tank Level HiHi Set-Point	2.20 m
TMP Hi Set-Point	30 kPa
TMP HiHi Set-Point	40 kPa
TMP_{CLEAN} HiHi Set-Point	14 kPa
Permeate Pump Flow Rate Set-Point	4.5 m3/hr
Permeate Pump Flow Rate LoLo Set-Point	1 m3/hr
RAS Pump Flow Rate LoLo Set-Point	9 m3/hr
Membrane Blower Flow Rate LoLo Set-Point	150 Nm^3/h
UV Intensity Lo	8.8 mW/cm^2

4.4.3 - MEMBRANE FILTRATION SYSTEM ALARMS

ALARM OR ALERT	DESCRIPTION	ACTION
Membrane Tank 1 Level LoLo	Indicates Membrane Tank 1 level has reached LoLo level Set-Point	Alarm: “Membrane Tank 1 Level LoLo” Train in STANDBY until Membrane Tank 1 Level reaches Set-Point. STOP RAS Pump.
Membrane Tank 1 Level Lo	Indicates Membrane Tank 1 level has reached Lo level Setpoint	System goes into STANDBY.
Membrane Tank 1 Level Hi	Indicates Membrane Tank 1 level has reached Hi level Setpoint	Alert: “Membrane Tank 1 Level Hi”
Membrane Tank 1 Level HiHi	Indicates Membrane Tank 1 level has reached HiHi level Set-Point	Alarm: “Membrane Tank 1 Level HiHi” STOP EQ Pumps but continue running system in PRODUCTION until

		Membrane Tank 1 Level reaches Set-Point. Note that an emergency overflow is installed on both membrane tanks that will allow a controlled overflow out of the container in case of emergencies.
Membrane Tank 1 Level Sensor Fault	Occurs when level sensor returns a non 4-20 mA signal	Alert: "Membrane Tank 1 Level Sensor Fault" Permeate Pumps in both trains operate off Membrane Tank 2 Level Sensor; CEBs and CIPs suspended until sensor is repaired
Membrane Tank 2 Level LoLo	Indicates Membrane Tank 2 level has reached LoLo level Set-Point	Alarm: "Membrane Tank 1 Level LoLo" Train in STANDBY until Membrane Tank 1 Level reaches Set-Point. STOP RAS Pump.
Membrane Tank 2 Level Lo	Indicates Membrane Tank 2 level has reached Lo level Setpoint	System goes into STANDBY.
Membrane Tank 2 Level Hi	Indicates Membrane Tank 2 level has reached Hi level Setpoint	Alert: "Membrane Tank 2 Level Hi"
Membrane Tank 2 Level HiHi	Indicates Membrane Tank 2 level has reached HiHi level Set-Point	Alarm: "Membrane Tank 2 Level HiHi" STOP EQ Pumps but continue running system in PRODUCTION until Membrane Tank 2 Level reaches Set-Point. Note that an emergency overflow is installed on both membrane tanks that will allow a controlled overflow out of the container in case of emergencies.

Membrane Tank 2 Level Sensor Fault	Occurs when level sensor returns a non 4-20 mA signal	Alert: "Membrane Tank 2 Level Sensor Fault" Permeate Pumps in both trains operate off Membrane Tank 1 Level Sensor; CEBs and CIPs suspended until sensor is repaired
Train 1 - TMP Hi	Indicates TMP has reached Hi Set-Point in Train 1.	Alert: "Train 1 TMP Hi - Schedule a CIP as soon as possible."
Train 1 - TMP HiHi	Indicates TMP has reached HiHi Set-Point in Train 1.	Alarm: "Train 1 TMP HiHi – CIP critical" – STOP Permeate Pump and run Train 2 only until alarm is cleared.
Train 1 – TMP_{CLEAN} Hi Hi	Indicates TMP has reached HiHi Set-Point in Train 1 during a CEB or CIP	Alarm: "Train 1 TMP_{CLEAN} HiHi – Check Cleaning Regimen" – STOP CEBs and CIPs on Train 1 until TMP alarm cleared.
Train 2 - TMP Hi	Indicates TMP has reached Hi Set-Point in Train 2	Alert: "Train 2 TMP Hi - Schedule a CIP as soon as possible."
Train 2 - TMP HiHi	Indicates TMP has reached HiHi Set-Point in Train 2	Alarm: "Train 2 TMP HiHi – CIP critical" – STOP Permeate Pump and run Train 1 only until alarm is cleared.
Train 2 – TMP_{CLEAN} HiHi	Indicates TMP has reached HiHi Set-Point in Train 2 during a CEB or CIP	Alarm: "Train 2 TMP_{CLEAN} HiHi – Check Cleaning Regimen" – STOP CEBs and CIPs on Train 2 until TMP alarm cleared.
Train 1 Permeate Pressure Sensor Fault	Occurs when pressure sensor returns a non 4-20 mA signal	Alarm: "Permeate Pressure Sensor Fault" – STOP Train 1 and RUN Train 2 only until pressure sensor is repaired
Train 2 Permeate Pressure Sensor Fault	Occurs when pressure sensor returns a non 4-20 mA signal	Alarm: "Permeate Pressure Sensor Fault" – STOP Train 2 and RUN Train 1 only until pressure sensor is repaired
Permeate Flow Rate LoLo (Train 1 or 2)	Occurs when Permeate Pump is in RUN and FIT-79074 reads less than the Permeate Flow Rate	Alarm: "Permeate Flow Rate LoLo – Train 1/2" STOP Permeate Pump 1/2–

	LoLo Set-Point	this indicates a possible broken pipe or clogged pipe/pump.
Permeate Pump Fault (Train 1 or 2)	Indicates a mechanical failure of the Permeate Pump	Alarm: “Permeate Pump Fault” Stop Feed to Train with Fault (close FV-74050).
Permeate Flow Meter Fault (Train 1 or 2)	Occurs when Permeate Flow Meter returns non 4-20 mA signal	Alert: “Permeate Flow Meter Fault” STOP CEBs and CIPs on that train until fault is cleared
RAS Pump Fault (Train 1 or 2)	Indicates a mechanical failure of the RAS Pump	Alarm: “RAS Pump Fault” Stop Feed to Train with Fault.
RAS Flow Meter Fault (Train 1 or 2)	Occurs when RAS Flow Meter returns non 4-20 mA signal	Alert: “RAS Flow Meter Fault” Disable Automatic Sludge Wasting
RAS Flow Rate LoLo (Train 1 or 2)	Occurs when RAS Pump is in RUN and FIT-74074 reads less than the RAS Flow Rate Lo Set-Point	Alarm: “RAS Flow Rate LoLo – Train 1/2" STOP RAS Pump 1/2 – this indicates a possible broken pipe or clogged pipe/pump.
Membrane Blower Fault (Train 1 or 2)	Indicates a mechanical failure of the Membrane Blower	Alarm: “Membrane Blower Fault” Stop Feed to Train (close FV-74050)
Membrane Blower Flow Rate LoLo (Train 1 or 2)	Occurs when Membrane Blower is in RUN and FS-75474 is tripped	Alarm: “Membrane Blower Flow Rate LoLo” Stop feed to Train with fault (close FV-74050) and indicate that operator must investigate (possible broken or clogged line)
UV System Fault (Train 1 or 2)	Indicates that the UV System has faulted	Alert: “UV System Fault – Train 1/2"
UV Bulb Life	Indicates UV System bulbs are nearing the end of predicted life	Alert: “Schedule UV Bulb Replacement”
UV Intensity	Monitors UV Intensity	Alert: “Schedule UV Bulb Replacement”

4.5 - MEMBRANE CLEANING

When a CEB or CIP is initiated, the Permeate Pump (P-79000) is used to transport treated water from the Permeate Tank (T-79200), through the Permeate Flow Meter (FIT-79074), Permeate Pump (P-79000), past the Air Release Valve (FV-31026) and into the membranes (F-74000). Cleaning chemicals are dosed inline to achieve the desired CEB or CIP concentration. For this mode, the flow direction is reversed automatically by switching electrically actuated valves to achieve the correct flow path. The PLC controls the permeate pump speed to achieve the "CEB/CIP Flow Rate," which is an input on the HMI.

4.5.1 - MEMBRANE CLEANING EQUIPMENT

4.5.1.1 - CLEANING CHEMICAL DOSING PUMPS

The CEB/CIP dosing pumps are used to inject chemicals into the cleaning chemical line when a CEB or CIP are conducted. The chemical is mixed with treated water that is pumped into the inside of the membranes to achieve the desired cleaning concentration.

There are two (2) Cleaning Chemical Dosing Pumps for the entire plant; one for dosing Sodium Hypochlorite (P-83500) and one for dosing Citric Acid (P-83700). These dosing pumps receive a digital signal from the PLC to initiate chemical dosing during CEB or CIP processes; however, they must be calibrated to provide the correct flow rate for a given application. Each dosing pump has feed lines to each train. When a CEB or CIP is conducted on Membrane Tank 1, for example, the dosing valve for Train 1 will open when the dosing pump is in RUN and the dosing valve for the other train remains closed. Since CEB processes are conducted on a weekly basis, the PLC will be programmed to ensure that the different trains schedule CEBs at different times. The CIP process is conducted relatively infrequently (quarterly). When a CIP is conducted, the Cleaning Chemical Dosing Pumps must be re-calibrated to achieve the higher concentration associated with CIPs and then returned to the CEB dosing rate after the CIP is completed.

A dedicated CEB/CIP screen can be found on the HMI where CEB events can be scheduled or manually started by the operator. During a CEB the HMI displays the current step in the sequence and the current status of the temporal and volumetric counters associated with each step. The same steps are used in a CEB and CIP but with different chemical dosing rates and soak durations. All CEB processes are initiated automatically based on a schedule that can be set on the HMI. Either chlorine or citric acid (one chemical only) can be selected as the CEB chemical. Since they are conducted on a weekly basis, a specific day of the week and time of day can be set. The day of the week is identified with a number (1-7; corresponding to Mon-Sun) and a second number defines the hour (1-24) based on a 24-hr clock. Note, that the system will be programmed such that only one train can operate a CEB or CIP at any given time.

CEB/CIP PREPARE

The Prepare Step is a short waiting step to allow the process changes to take effect. The membrane blower and RAS pump are turned OFF at the beginning of this Step and waiting allows the process to settle and adjust for the upcoming CEB/CIP.

CEB/CIP Injection

During the Injection Step, treated water from the Permeate Tank (T-79200) is drawn through the Permeate Pump (P-79000), through the Permeate Flow Meter (FIT-79074), past the Air Relief Valve (FV-31026) and then to the Membranes. The Dosing Pump, either NaOCl (P-83500) or Citric Acid (P-83700) starts and its associated Dosing Valve (FV-83576 for NaOCl or FV-83776 for Citric Acid) is opened. The cumulative volume of blended chemical as measured by FIT-79074 that is sent to the Membranes during the clean is totalized on a counter. Once the totalizer reaches the CEB or CIP Injection Volume Set-Point, the Injection step ends. The Air Relief Valve is opened during the CEB and CIP to allow the removal of air and prevent the possible build-up of pressure within the permeate line. The membranes must never experience a backpulse TMP (from the inside-out) greater than 14 kPa. The Permeate Pressure Sensor (PT-79045) monitors this pressure to ensure the limit is never breached; however, the air relief valve is designed as a back-up to never allow excessive pressures to occur in this line.

CEB/CIP Soak

The CEB/CIP Soak Step allows the membrane to be in contact with the cleaning chemical for a period of time to allow it to take effect. For CEBs this step is relatively short (2 minutes); for CIPs this lasts several hours to ensure adequate permeability recovery.

CEB/CIP Flush Step

The CEB/CIP Flush Step is similar to the Injection Step but without the chemical injection. Treated water is sent back to the membranes and flushes the chemical out of the membranes and into the activated sludge. At the beginning of this Step the RAS pump (P-74600) and Membrane Blower (B-7400) both RUN such that the chemical that is pushed into the Activated Sludge is diluted and consumed.

CEB/CIP Finish Step

The CEB/CIP Finish Step is designed to allow additional time for the Activated Sludge to recirculate in the bio-reactors. It is similar to Standby but with the feed valve to the train closed until the counter has reached the CEB or CIP Finish Step Duration Set-Point.

4.5.2 - MEMBRANE CLEANING HMI INPUTS

HMI INPUT	INITIAL VALUE
CEB/CIP Flow Rate	2 m^3/hr
CEB/CIP Maximum Pressure	+14 kPa
CEB Prepare Duration	60 s
CEB Injection Volume Set-Point	0.9 m^3
CEB Soak Duration	2 min
CEB Flush Volume Set-Point	0.9 m^3

CEB Finish Duration	30 s
CIP Prepare Duration	60 s
CIP Injection Volume Set-Point	0.9 m^3
CIP Soak Duration	240 min
CIP Flush Volume Set-Point	0.9 m^3
CIP Finish Duration	30 s

4.5.3 - MEMBRANE CLEANING ALARMS

ALARM OR ALERT	DESCRIPTION	ACTION
Hypochlorite Dosing Valve Fault (Train 1 or 2)	Indicates a fault from the electrically actuated valve	Alarm: "Hypo Dosing Valve Fault, Train 1/2" STOP Hypo CEBs and CIPs until fault is cleared
Citric Acid Dosing Valve Fault (Train 1 or 2)	Indicates a fault from the electrically actuated valve	Alarm: "Citric Dosing Valve Fault, Train 1/2" STOP Citric Acid CEBs and CIPs until fault is cleared
Hypochlorite Dosing Pump Fault	Indicates a mechanical failure of the chemical dosing pump	Alarm: "Hypo Dosing Pump Fault" STOP Hypo CEBs and CIPs until fault is cleared
Citric Acid Dosing Pump Fault	Indicates a mechanical failure of the chemical dosing pump	Alarm: "Citric Dosing Pump Fault" STOP Citric Acid CEBs and CIPs until fault is cleared
Air Release Valve Fault (Train 1 or 2)	Indicates a fault from the electrically actuated valve	Alert: "Air Release Valve Fault – Train 1/2"

4.5.4 - CHEMICAL ADDITION CHART

CLEANING CHEMICAL	APPLICATION	RECIPE
Sodium Hypochlorite (NaOCl)	Sodium Hypochlorite is an oxidant and is used to provide cleaning of typical membrane foulants (organic foulants) for this application. This chemical should be used for cleaning as a first response and will provide good results most	STOCK NaOCl: 10.3% CEB Concentration: 300-500 mg/L CIP Concentration: 3-5 g/L Volume of chemical for a CEB: 7.5 L Volume of chemical for a CIP: 75 L Frequency of a CEB: weekly per train

	of the time.	Frequency of a CIP: quarterly per train
Citric Acid	Citric Acid is used to provide cleaning for the removal of inorganic substances from the membrane. In most cases this chemical is not required unless there is a concern of accumulation of inorganic substances.	STOCK Citric Acid: Powdered Form 100% CIP Concentration: 1% wt. Mass of chemical for a CIP: 10 kg Frequency of a CIP: annually per train

4.6 - PERMEATE POST-TREATMENT

Permeate from the UV system (UV-91000) flows to the combined Permeate Tank (T-79200), where it is stored temporarily for cleans or pumped to the discharge point by the effluent pumps (P-79600A/B).

4.6.1 - PERMEATE POST TREATMENT EQUIPMENT

ÉQUIPMENT	TAGS	QTY	DESIGN VALUE	NOTES
Permeate Tank	T-79200	1	1.5 m3	HDPE Rectangular Tank
Effluent Pumps	P-79600A/B	2	9 m3/hr each	Duty/standby configuration
Permeate Tank Level Sensor	LT-79060	1	0 – 1.5 m	
Effluent pH Sensor	AIT-79093	1	pH: 0 - 14	Target pH 6-8
Effluent Turbidity Sensor	AIT-79089	1	0-5 NTU	
Effluent Flowmeter	FIT-79274	1	0 - 15 m3/hr	Measures the effluent flow from the plant

4.6.1.1 - EFFLUENT PUMPS

The Effluent Pumps will operate based on the level in the Permeate Tank. The Effluent Pumps are each set up to operate at the design flow rate of the plant. This flow can be monitored using the effluent flowmeter (FIT-79274).

Under normal operation, one pump will operate. The single pump will RUN at the “Hi” Set-Point and turn STOP at the “Lo” Set-Point. In the event of an upset where the Permeate Tank level increases, an emergency backup is available to prevent overflowing from occurring. If the Permeate Tank level reaches the “HiHi” level, the second Effluent Pump will RUN to increase the flow from the system. Once the Permeate Tank level falls below the Lo Level Setpoint, both effluent Pumps will STOP. When the level rises above the “Hi” Set-Point again the system will continue operation as normal with one pump running.

The Effluent Pump status and Flow Rates are determined in response to the Permeate Tank Level Sensor (LT-79060) as follows:

TANK LEVEL	DESCRIPTION	NOTES
Below LoLo Level Set-Point	Notification	This is an alarm that indicates the Permeate Tank is empty and there is no permeate available for performing cleaning.
Below Lo Level Set-Point	STOP Effluent Pumps	This STOPs the Effluent Pumps from running and ensures adequate permeate is available for cleaning.
Above Hi Level Set-Point	RUN Effluent Pump.	During normal operation a single Effluent Pump is in RUN and the flow rate should be adjusted to be slightly higher than the Equalized Feed Flow Set-Point. The operator can manually adjust the flow if desired to meet specific plant needs. This will cause the Effluent Pump to RUN when the permeate tank hits the Hi level and continue until the permeate tank hits the Lo level.
Above HiHi Level Set-Point	RUN both Effluent Pumps.	When the Effluent Tank level increases to the HiHi Level Set-Point, a critical alert occurs and the second Effluent Pump will RUN. Both pumps will continue to RUN until the Permeate Tank level drops to the Lo Level Set-Point. With both pumps running, the total flow rate will increase to prevent an overflow. Note that an overflow line is installed on the Permeate tank to ensure any overflow is directed out of the container.

Note: Effluent Pump A and Effluent Pump B should alter operation after every time the pumps STOP unless a Pump Fault indicates otherwise. This will reduce the number of Starts/Stops that the pumps undergo as the level in the permeate tank moves from between the Hi and Lo Levels.

4.6.2 - PERMEATE POST TREATMENT HMI INPUTS

The following values are input on the HMI and can be adjusted to optimize system operation.

HMI INPUT	INITIAL VALUE
Permeate Tank Level Set-Point	1.0 m
Permeate Tank Level – LoLo Set-Point	0.8 m
Permeate Tank Level – Lo Set-Point	
Permeate Tank Level – Hi Set-Point	1.2 m
Permeate Tank Level – HiHi Set-Point	1.5 m
Effluent pH - Lo Set-Point	6.0
Effluent pH - Hi Set-Point	8.0
Effluent Turbidity - Hi Set-Point	2.0 NTU
Effluent Flow Rate - LoLo Set-Point	1 m3/hr

4.6.3 - PERMEATE POST TREATMENT ALARMS

ALARM OR ALERT	DESCRIPTION	ACTION
Effluent Pump A Fault	Indicates mechanical failure of Effluent Pump A	Alert: “Effluent Pump A Fault” Turn Effluent Pump A to OFF and switch operation to Effluent Pump B
Effluent Pump B Fault	Indicates mechanical failure of Effluent Pump B	Alert: “Effluent Pump B Fault” Turn Effluent Pump B to OFF and switch operation to Effluent Pump A
Effluent Flow Rate - LoLo	Occurs when Effluent Pumps are ON and FIT-99274 reads less than the Effluent Flow Rate LoLo Set-Point	Alarm: “Effluent Flow Rate LoLo” STOP Effluent Pumps – this indicates a possible broken pipe or clogged pipe/pump.
Permeate Tank Level – LoLo	Occurs when Permeate Tank level drops below the LoLo Level Set-Point	Alert: “Permeate Tank - Level LoLo” STOP Effluent Pumps
Permeate Tank Level - HiHi	Occurs when Permeate Tank level rises above HiHi Level Set-Point	Critical Alarm: “Permeate Tank – Level HiHi” RUN both Effluent Pumps in tandem until Tank Level drops below

		the Hi Level Set-Point
Permeate Tank Level Sensor Fault	Occurs if the transmitter returns non 4-20 mA signal	Alert: “Permeate Tank – Level Sensor Fault” Continue Effluent Pump in RUN until Level Sensor Fault cleared
Effluent pH - Lo	Indicates pH is below the pH Lo Set-Point	Alert: “Effluent pH Lo”
Effluent pH - Hi	Indicates pH is above the pH Hi Set-Point	Alert: “Effluent pH Hi”
Effluent pH Sensor Fault	Occurs when sensor returns non 4-20 mA signal	Alert: “Effluent pH Sensor Fault”
Effluent Turbidity – Hi	Indicates turbidity is above the Turbidity – Hi Setpoint	Alert: “Effluent turbidity Hi”
Effluent Turbidity Sensor Fault	Occurs when sensor returns non 4-20 mA signal	Alert: “Effluent turbidity Sensor Fault”
Effluent Flowmeter Fault	Occurs if the flowmeter returns non 4-20 mA signal	Alarm: “Effluent Flowmeter Fault” Continue Effluent Pump in RUN

4.7 - SLUDGE HANDLING SYSTEM

The excess sludge that is produced within a bioreactor is known as Waste Activated Sludge (WAS). Each Return Activated Sludge (RAS) line has a tee after the RAS Flow Meter (FIT-74674) where the RAS can be redirected to the Sludge Storage Tank by opening the Sludge Wasting Valve (FV-96001). One Sludge Holding Tank is installed for both trains. Wasting occurs once per day based on an HMI input called "Daily Sludge Wasting Volume". A timer is implemented that allows wasting after 24 hours of plant operation as measured by flow from FIT-74674 (to the Aerobic Tank). This ensures that wasting occurs only during PRODUCTION. Since there are 2 Membrane Trains that both have the ability to conduct sludge wasting, wasting will be alternated between the two trains every other day.

Once the valve has been actuated to redirect the Sludge to the Sludge Storage Tank, the PLC uses the RAS Flow Meter to totalize the volume of sludge that is sent to the Sludge Storage Tank. Once the Daily Sludge Wasting Volume has been wasted, the valve closes and flow is directed back to the RAS line. The volume of sludge that needs to be wasted is a function of the MLSS measured in the Aerobic Tank and the BOD loading rate of the plant. The system will operate well with MLSS values in the range of 7-12 g/L, and this value can be adjusted for lower or higher BOD loading rates. The design MLSS value is 10 g/L. The system will automatically waste the "Daily Sludge Wasting Volume" input into the HMI. The required daily wasting value can be estimated based on the following equation (note: negative values will result in zero sludge wasting):

$$Calculated\ wasting\ volume\ to\ maintain\ MLSS\ concentration\ (m^3)$$

$$= 2\%\ of\ the\ volume\ of\ water\ treated\ yesterday + \frac{\left(1 - \frac{10\ g/L}{\text{MLSS}\ g/L}\right) \times 76\ m^3 (Total\ Process\ Volume)}{7\ days}$$

Where,

MLSS g/L = the measured MLSS concentration (based on a weekly sample taken from the Aerobic tank and analyzed for MLSS at a laboratory).

Recommendations:

- ***i) It is recommended that after start-up NO WASTING is conducted for the first 2 weeks of operation unless the MLSS is above 4 g/L.***
- ***ii) As of 2 weeks after biological seeding and steady process operation it is recommended to waste at least 1% of the total daily flow each day to prevent accumulation of inert solids as the bacteria concentration grows to the design values.***

The Sludge Storage Tank has a volume of 19 m^3 and is designed to handle the amount of sludge produced over a 5-7 day period at the maximum design flow rate. The Sludge Tank is aerated continuously by the Sludge Blower (B-75800) that feeds air to coarse bubble diffusers (CBD-96086) to

keep the sludge in an aerobic state and encourage aerobic digestion. The level of sludge in the Sludge Storage Tank is measured by the Sludge Storage Tank Level Sensor (LT-96060)..

In order to minimize the WAS volume, a decant/overflow line is installed in each sludge holding tank to allow it to act as a thickener. The WAS can be thickened (concentrated) by stopping aeration for a period of time (~1 hour) to allow the solids to settle. As the solids settle within the sludge tank an interface will appear between the clear liquid (called supernatant) and the concentrated sludge. The decant line is then opened manually by the operator, and the supernatant is sent back to the Sump Tank. This will allow the sludge concentration to be increased by 2-3 times the MLSS concentration. The PLC will notify the operator when the Sludge Tank reaches the Hi level and indicate that a decant should be conducted.

4.7.1 - SLUDGE HANDLING SYSTEM EQUIPMENT

EQUIPMENT	TAGS	CONFIGURATION	Design Value	NOTES
Sludge Storage Tank	T-96000	1	19 m^3	Minimum 5 day capacity
Coarse Bubble Diffusers	CBD-96086	1	N/A	
Sludge Blower	B-75800	1	50 m^3/hr at 3 m H_2O	
Sludge Storage Tank Level Sensor	LT-96060	1	0 – 2.5 m H_2O	
Sludge Wasting Valve	FV-96001	1	N/A	

4.7.1.1 - SLUDGE BLOWER

The Sludge Blower is used to supply oxygen to the Sludge Storage Tank in order to maintain an aerobic environment and provide mixing. One blower is supplied for the tank, and under normal conditions, the blower will always be in RUN.

4.7.2 - SLUDGE HANDLING SYSTEM HMI INPUTS

HMI INPUT	INITIAL VALUE
Daily Sludge Wasting Volume	4.3 m^3*
Sludge Storage Tank Level Hi	2.0 m

Sludge Storage Tank Level HiHi	2.2 m
Suggested Wasting Volume	"displayed based on calculated value" m^3

*Disable for the first 2 weeks of operation

4.7.3 - SLUDGE HANDLING SYSTEM ALARMS

ALARM OR ALERT	DESCRIPTION	ACTION
Sludge Storage Tank Level Hi	Indicates the level in the Sludge Storage Tank has reached the Hi Level Set-Point	Alert: "Sludge Storage Tank Level Hi. Conduct Decant; check new level and Schedule Sludge Truck Out."
Sludge Storage Tank Level HiHi	Indicates the level in the Sludge Storage Tank has reached the HiHi Level Set-Point	Alarm: "Sludge Storage Tank Level HiHi." Disable sludge wasting. Note that an emergency overflow in the Sludge Tank will direct excess volume to the Sump Tank.
Sludge Storage Tank Level LoLo	Indicates the level in the Sludge Storage Tank has reached the LoLo Level Set-Point and is at the Coarse Bubble Diffusers	Alert: "Sludge Storage Tank Level LoLo" STOP Sludge Blower until the level increases above the LoLo Level.
Sludge Tank Level Sensor Fault	Occurs when level sensor returns a non 4-20 mA signal	Alarm: "Sludge Tank Level Sensor Fault." STOP FV-96001 until fault cleared.

8.2 - ALARMS LIST

			Alarm List												
		CUSTOMER:	Meliadine		Created by:	Vincent Roberge		Revision:	00						
		PROJECT NUMBER:	U65875		Revised by:										
		DOCUMENT NUMBER:	U65875-10		Date:	30-06-2016									
P&ID TAG	**PLC TAG**	**TYPE**	**DESCRIPTION (HMI MESSAGE)**	**When Active**	**Deadband**	**SETPOINT**	**UNITS**	**DELAY (s)**	**Severity**	**ACTION**	**Reset Required**	**SPMC Alarm**	**P&ID #**	**NOTES**	**Rev**
NA		DIGITAL	Main Control Panel Emercengy Stop				-		4	Stop			NA		
NA		DIGITAL	Panel 120V Detect				-		4	Stop			NA		
NA		DIGITAL	Remote IO Emercengy Stop				-		4	Stop			NA		
NA		DIGITAL	RIO 120V Detect				-		4	Stop			NA		
FT-19274		ANALOG	Alm_Hi - FI-19274 Equalized Water From Equalization Tank Flow Indicating Transmitter High			9	m^3/h		3	Notification			U65875-C01-0110		0
FT-19274		ANALOG	Alm_LoLo - FI-19274 Equalized Water From Equalization Tank Flow Indicating Transmitter Low Low			1	m^3/h		4	Notification			U65875-C01-0110		0
FT-12274		ANALOG	Alm_Hi - FI-12274 Screened Water to Aerobic Tank Flow Indicating Transmitter High			9	m^3/h		4	Notification			U65875-C01-0110		0
FT-12274		ANALOG	Alm_Lo - FI-12274 Screened Water to Aerobic Tank Flow Indicating Transmitter Low			1	m^3/h		3	Notification			U65875-C01-0110		0
LT-12060		ANALOG	Alm_HiHi - LT-12060 Screened Water Tank T-12000 Level Transmitter High High			3,6	m		4	Stop EQ Pumps			U65875-C01-0110		0
LT-12060		ANALOG	Alm_LoLo - LT-12060 Screened Water Tank T-12000 Level Transmitter Low Low			0,3	m		4	Stop Sump Pumps, Notification			U65875-C01-0110		0
LAL-12061		DIGITAL	Alm_Lo - LAL-12061 Screened Water Tank T-12000 Low Level Switch				-		3	Stop Sump Pumps			U65875-C01-0110		0
LAH-12062		DIGITAL	Alm_Hi - LAH-12062 Screened Water Tank T-12000 High Level Switch				-		3	Start 2nd Pump, Stop EQ Pumps, Notification			U65875-C01-0110		0
YA-11200A		DIGITAL	Alm_YA - SCR11200A Fine Screen SCR-11200A Fault Alarm				-		3	Notification			U65875-C01-0110		0
YA-11200B		DIGITAL	Alm_YA - SCR11200B Fine Screen SCR-11200B Fault Alarm				-		3	Notification			U65875-C01-0110		0
YI-11200A		DIGITAL	Alm_YI - SCR11200A Fail To Start Alarm				-		3	Notification			U65875-C01-0110		0
YI-11200A		DIGITAL	Alm_YI - SCR11200A Fail To Stop Alarm				-		3	Notification			U65875-C01-0110		0
YI-11200B		DIGITAL	Alm_YI - SCR11200B Fail To Start Alarm				-		3	Notification			U65875-C01-0110		0
YI-11200B		DIGITAL	Alm_YI - SCR11200B Fail To Stop Alarm				-		3	Notification			U65875-C01-0110		0
FIT-11274		ANALOG	Alm_Hi - FIT-11274 Waste Water Flow Indicating Transmitter to Equalization Tanks High			106	m^3/h		3	Notification			U65875-C01-0190		0
FIT-11274		ANALOG	Alm_Lo - FIT-11274 Waste Water Flow Indicating Transmitter to Equalization Tanks Low			1	m^3/h		3	Notification			U65875-C01-0190		0
LT-19060A		ANALOG	Alm_HiHi - LT-19060A Equalization Tank T-19000A Level Transmitter High High			6	m		4	Critical Alarm			U65875-C01-0190		0
LT-19060A		ANALOG	Alm_Hi - LT-19060A Equalization Tank T-19000A Level Transmitter High			4	m		3	Notification; equalization tank level High			U65875-C01-0190		0
LT-19060A		ANALOG	Alm_Lo - LT-19060A Equalization Tank T-19000A Level Transmitter Low			1	m		3	No Action			U65875-C01-0190		0
LT-19060A		ANALOG	Alm_LoLo - LT-19060A Equalization Tank T-19000A Level Transmitter Low Low			0,8	m		4	Stop pump; train in standby			U65875-C01-0190		0
LT-19060B		ANALOG	Alm_HiHi - LT-19060B Equalization Tank T-19000A Level Transmitter High High			6	m		4	Critical alarm			U65875-C01-0190		0
LT-19060B		ANALOG	Alm_Hi - LT-19060B Equalization Tank T-19000A Level Transmitter High			4	m		3	Notification; equalization tank level high			U65875-C01-0190		0
LT-19060B		ANALOG	Alm_Lo - LT-19060B Equalization Tank T-19000A Level Transmitter Low			1	m		3	No Action			U65875-C01-0190		0
LT-19060B		ANALOG	Alm_LoLo - LT-19060B Equalization Tank T-19000A Level Transmitter Low Low			0,8	m		4	Stop pump; train in stanby			U65875-C01-0190		0
YA-19200A		DIGITAL	Alm_YA - P19200A Equalization pump P-19200A Fault Alarm				-		4	Stop pump; Use Standby Pump; Notification			U65875-C01-0190		0
YA-19200B		DIGITAL	Alm_YA - P19200B Equalization pump P-19200B Fault Alarm				-		4	Stop pump; Use Standby Pump; Notification			U65875-C01-0190		0
YI-19200A		DIGITAL	Alm_YI - P19200A Fail To Start Alarm				-		4	Stop pump; Use Standby Pump; Notification			U65875-C01-0190		0
YI-19200A		DIGITAL	Alm_YI - P19200A Fail To Stop Alarm				-		4	Stop pump; Use Standby Pump; Notification			U65875-C01-0190		0
YI-19200B		DIGITAL	Alm_YI - P19200B Fail To Start Alarm				-		4	Stop pump; Use Standby Pump; Notification			U65875-C01-0190		0
YI-19200B		DIGITAL	Alm_YI - P19200B Fail To Stop Alarm				-		4	Stop pump; Use Standby Pump; Notification			U65875-C01-0190		0
LT-72060		ANALOG	Alm_HiHi - LT-72060 Aerobic Tank T-73000 Level Transmitter High High			6,2	m		3	Stop EQ Pumps; Notification			U65875-C01-0720		0
LT-72060		ANALOG	Alm_Hi - LT-72060 Aerobic Tank T-73000 Level Transmitter High			6	m		3	Notification			U65875-C01-0720		0
LT-72060		ANALOG	Alm_Lo - LT-72060 Aerobic Tank T-73000 Level Transmitter Low			4	m		3	Notification			U65875-C01-0720		0
LT-72060		ANALOG	Alm_LoLo - LT-72060 Aerobic Tank T-73000 Level Transmitter Low Low			3	m		4	Stop EQ Pumps; Notification			U65875-C01-0720		0
PT-79045-1		ANALOG	Alm_HiHi - DP-79045-1 Pressure Transmitter Train 1 High High			40	kPa		4	Notification; Conduct CIP ASAP			U65875-C01-0740		0
PT-79045-1		ANALOG	Alm_Hi - DP-79045-1 Pressure Transmitter Train 1 High			30	kPa		3	Notification to Schedule CIP ASAP			U65875-C01-0740		0
PT-79045-1		ANALOG	Alm_Lo - DP-79045-1 Pressure Transmitter Train 1 Low			3	kPa		3	No Action			U65875-C01-0740		0
PT-79045-1		ANALOG	Alm_LoLo - DP-79045-1 Pressure Transmitter Train 1 Low Low			1	kPa		3	Notification			U65875-C01-0740		0
PT-79045-2		ANALOG	Alm_HiHi - DP-79045-2 Pressure Transmitter Train 2 High High			40	kPa		4	Notification; Conduct CIP ASAP			U65875-C01-0740		0
PT-79045-2		ANALOG	Alm_Hi - DP-79045-2 Pressure Transmitter Train 2 High			30	kPa		3	Notification to Schedule CIP ASAP			U65875-C01-0740		0
PT-79045-2		ANALOG	Alm_Lo - DP-79045-2 Pressure Transmitter Train 2 Low			3	kPa		3	No Action			U65875-C01-0740		0
PT-79045-2		ANALOG	Alm_LoLo - DP-79045-2 Pressure Transmitter Train 2 Low Low			1	kPa		4	Notification			U65875-C01-0740		0
LT-74060-1		ANALOG	Alm_HiHi - LT-74060-1 Membrane Tank T-74000-1 Level Transmitter Train 1 High High			2,2	m		4	Feed to Train (Close FV-74050-1) until Tank level reaches "Lo" Set-Point			U65875-C01-0740		0
LT-74060-1		ANALOG	Alm_Hi - LT-74060-1 Membrane Tank T-74000-1 Level Transmitter Train 1 High			2	m		3	Notification			U65875-C01-0740		0
LT-74060-1		ANALOG	Alm_Lo - LT-74060-1 Membrane Tank T-74000-1 Level Transmitter Train 1 Low			1,8	m		3	System goes into STANDBY			U65875-C01-0740		0
LT-74060-1		ANALOG	Alm_LoLo - LT-74060-1 Membrane Tank T-74000-1 Level Transmitter Train 1 Low Low			1,7	m		4	Train in STANDBY until Membrane Tank 1 Level reaches Set-Point. STOP RAS Pump			U65875-C01-0740		0
LT-74060-2		ANALOG	Alm_HiHi - LT-74060-2 Membrane Tank T-74000-2 Level Transmitter Train 2 High High			2,2	m		4	Feed to Train (Close FV-74050-2) until Tank level reaches "Lo" Set-Point			U65875-C01-0740		0
LT-74060-2		ANALOG	Alm_Hi - LT-74060-2 Membrane Tank T-74000-2 Level Transmitter Train 2 High			2	m		3	Notification			U65875-C01-0740		0
LT-74060-2		ANALOG	Alm_Lo - LT-74060-2 Membrane Tank T-74000-2 Level Transmitter Train 2 Low			1,8	m		3	System goes into STANDBY			U65875-C01-0740		0
LT-74060-2		ANALOG	Alm_LoLo - LT-74060-2 Membrane Tank T-74000-2 Level Transmitter Train 2 Low Low			1,7	m		4	Train in STANDBY until Membrane Tank 1 Level reaches Set-Point. STOP RAS Pump			U65875-C01-0740		0
FT-79074-1		ANALOG	Alm_Lo - FT-79074-1 Permeate Flow Indicating Transmitter Train 1 Low			1	m^3/h		3	Notification			U65875-C01-0740		0
FT-79074-2		ANALOG	Alm_Lo - FT-79074-2 Permeate Flow Indicating Transmitter Train 2 Low			1	m^3/h		3	Notification			U65875-C01-0740		0
FT-74674-1		ANALOG	Alm_Lo - FT-74674-1 RAS/WAS Flow Indicating Transmitter Train 1 Low			9	m^3/h		3	Notification			U65875-C01-0740		0
FT-74674-2		ANALOG	Alm_Lo - FT-74674-2 RAS/WAS Flow Indicating Transmitter Train 2 Low			9	m^3/h		3	Notification			U65875-C01-0740		0
YA-79000-1		DIGITAL	Alm_YA - P79000A Permeate Pump P-79000-1 Fault Feedback Alarm				-		4	Stop permeation; show an Alarm			U65875-C01-0740		0
YA-79000-2		DIGITAL	Alm_YA - P79000B Permeate Pump P-79000-2 Fault Feedback Alarm				-		4	Stop permeation; show an Alarm			U65875-C01-0740		0
YI-79000-1		DIGITAL	Alm_YI - P79000A Fail To Start Alarm				-		4	Stop permeation; show an Alarm			U65875-C01-0740		0
YI-79000-1		DIGITAL	Alm_YI - P79000A Fail To Stop Alarm				-		4	Stop permeation; show an Alarm			U65875-C01-0740		0
YI-79000-2		DIGITAL	Alm_YI - P79000B Fail To Start Alarm				-		4	Stop permeation; show an Alarm			U65875-C01-0740		0
YI-79000-2		DIGITAL	Alm_YI - P79000B Fail To Stop Alarm				-		4	Stop permeation; show an Alarm			U65875-C01-0740		0
YA-79000-1		DIGITAL	Alm_YA - P79000-1 RAS/WAS Pump P-74600-1 Fault Feedback Alarm				-		4	Stop permeation; show an Alarm			U65875-C01-0740		0
YA-79000-2		DIGITAL	Alm_YA - P79000-2 RAS/WAS Pump P-74600-2 Fault Feedback Alarm				-		4	Stop permeation; show an Alarm			U65875-C01-0740		0
YI-74600-1		DIGITAL	Alm_YI - P74600A Fail To Start Alarm				-		4	Train in stanby			U65875-C01-0740		0
YI-74600-1		DIGITAL	Alm_YI - P74600A Fail To Stop Alarm				-		4	Train in stanby			U65875-C01-0740		0
YI-74600-2		DIGITAL	Alm_YI - P74600B Fail To Start Alarm				-		4	Train in stanby			U65875-C01-0740		0
YI-74600-2		DIGITAL	Alm_YI - P74600B Fail To Stop Alarm				-		4	Train in stanby			U65875-C01-0740		0
FT-75074		ANALOG	Alm_LoLo - FT-75074 Air to Equalization Tank Flow Indicator Transmitter Low Low			120	m^3/h		3	Notification			U65875-C01-0750(1/2)		0
FT-77274		ANALOG	Alm_LoLo - FT-75274 Air to Aerobic Tank Flow Indicating Transmitter Low Low			50	m^3/h		4	Notification			U65875-C01-0750(1/2)		0
YA-75000		DIGITAL	Alm_YA - B75000 Equalization Blower B-75000 Fault Feedback Alarm				-		4	Notification			U65875-C01-0750(1/2)		0
YI-75000		DIGITAL	Alm_YI - B75000 Fail To Start Alarm				-		4	Notification			U65875-C01-0750(1/2)		0
YI-75000		DIGITAL	Alm_YI - B75000 Fail To Stop Alarm				-		4	Notification			U65875-C01-0750(1/2)		0
YA-75240A		DIGITAL	Alm_YA- B75240A Process Blower B-75240A Fault Feedback Alarm				-		4	Turn blower Off; Turn Standby Blower ON			U65875-C01-0750(1/2)		0
YI-75240A		DIGITAL	Alm_YI - B75240A Fail To Start Alarm				-		4	Turn blower Off; Turn Standby Blower ON			U65875-C01-0750(1/2)		0
YI-75240A		DIGITAL	Alm_YI - B75240A Fail To Stop Alarm				-		4	Turn blower Off; Turn Standby Blower ON			U65875-C01-0750(1/2)		0
YA-75240B		DIGITAL	Alm_YA- B75240B Process Blower B-75240B Fault Feedback Alarm				-		4	Turn blower Off; Turn Standby Blower ON			U65875-C01-0750(1/2)		0
YI-75240B		DIGITAL	Alm_YI - B75240B Fail To Start Alarm				-		4	Turn blower Off; Turn Standby Blower ON			U65875-C01-0750(1/2)		0
YI-75240B		DIGITAL	Alm_YI - B75240B Fail To Stop Alarm				-		4	Turn blower Off; Turn Standby Blower ON			U65875-C01-0750(1/2)		0
FT-75474A		ANALOG	Alm_LoLo - FT-75474A Air to Membrane Train 1 Flow Indicating Transmitter Low Low			150	m^3/h		4	Train 1 in Standby; Notification			U65875-C01-0750(2/2)		0
FT-75474B		ANALOG	Alm_LoLo - FT-75474B Air to Membrane Train 2 Flow Indicating Transmitter Low Low			150	m^3/h		4	Train 2 in Standby; Notification			U65875-C01-0750(2/2)		0

P&ID TAG	PLC TAG	TYPE	DESCRIPTION (HMI MESSAGE)	When Active	Deadband	SETPOINT	UNITS	DELAY (s)	Severity	ACTION	Reset Required	SPMC Alarm	P&ID #	NOTES	Rev
FT-75874		ANALOG	Alm_LoLo - FT-75874 Sludge Aeration Air Flow Indicating Transmitter Low Low			25	m^3/h		4	Notification			U65875-C01-0750(2/2)		0
YA-75400A		DIGITAL	Alm_YA - B75400A Membrane Blower B-75400A Fault Feedback Alarm				-		4	Train in stanby turn blower Off			U65875-C01-0750(2/2)		0
YI-75400A		DIGITAL	Alm_YI - B75400A Fail To Start Alarm				-		4	Train in stanby turn blower Off			U65875-C01-0750(2/2)		0
YI-75400A		DIGITAL	Alm_YI - B75400A Fail To Stop Alarm				-		4	Train in stanby turn blower Off			U65875-C01-0750(2/2)		0
YA-75400B		DIGITAL	Alm_YA - B75400B Membrane Blower B-75400B Fault Feedback Alarm				-		4	Train in stanby turn blower Off			U65875-C01-0750(2/2)		0
YI-75400B		DIGITAL	Alm_YI - B75400B Fail To Start Alarm				-		4	Train in stanby turn blower Off			U65875-C01-0750(2/2)		0
YI-75400B		DIGITAL	Alm_YI - B75400B Fail To Stop Alarm				-		4	Train in stanby turn blower Off			U65875-C01-0750(2/2)		0
YA-75800		DIGITAL	Alm_YA - B75800 Sludge Blower B-75800 Fault Feedback Alarm				-		4	Notification			U65875-C01-0750(2/2)		0
YI-75800		DIGITAL	Alm_YI - B75800 Fail To Start Alarm				-		4	Notification; Turn Blower Off			U65875-C01-0750(2/2)		0
YI-75800		DIGITAL	Alm_YI - B75800 Fail To Stop Alarm				-		4	Notification; Turn Blower Off			U65875-C01-0750(2/2)		0
LT-79060		ANALOG	Alm_HiHi - LT79060 Permeate Tank Level Transmitter High High			1,5	m		4	Critical Alarm; Both Trains in Standby			U65875-C01-0790		0
LT-79060		ANALOG	Alm_Hi - LT79060 Permeate Tank Level Transmitter High			1,2	m		3	Notification			U65875-C01-0790		0
LT-79060		ANALOG	Alm_Lo - LT79060 Permeate Tank Level Transmitter Low				m		3	Notification			U65875-C01-0790		0
LT-79060		ANALOG	Alm_LoLo - LT79060 Permeate Tank Level Transmitter Low Low			0,8	m		4	Notification; Disable CEB until Level reaches Low Level			U65875-C01-0790		0
YA-79600A		DIGITAL	Alm_YA - P79600A Effluent Pump P-79600A Fault Feedback Alarm				-		4	Use Standby Pump			U65875-C01-0790		0
YI-79600A		DIGITAL	Alm_YI - P79600A Fail To Start Alarm				-		4	Use Standby Pump			U65875-C01-0790		0
YI-79600A		DIGITAL	Alm_YI - P79600A Fail To Stop Alarm				-		4	Use Standby Pump			U65875-C01-0790		0
YA-79600B		DIGITAL	Alm_YA - P79600B Effluent Pump P-79600B Fault Feedback Alarm				-		4	Use Standby Pump			U65875-C01-0790		0
YI-79600B		DIGITAL	Alm_YI - P79600B Fail To Start Alarm				-		4	Use Standby Pump			U65875-C01-0790		0
YI-79600B		DIGITAL	Alm_YI - P79600B Fail To Stop Alarm				-		4	Use Standby Pump			U65875-C01-0790		0
YA-83700		DIGITAL	Alm_YA - P83700 Citric Acid Pump P-83700 Fault Feedback Alarm				-		4	Notification			U65875-C01-0800(1/2)		0
YA-83500		DIGITAL	Alm_YA - P83500 Sodium Hypochlorite P-83500 Fault Feedback Alarm				-		4	Notification			U65875-C01-0800(1/2)		0
YA-80500A		DIGITAL	Alm_YA - P80500A Alkalinity Pump P-80500A Fault Feedback Alarm				-		4	Notification; Use Standby Pump			U65875-C01-0800(2/2)		0
YA-80500B		DIGITAL	Alm_YA - P80500B Alkalinity Pump P-80500B Fault Feedback Alarm				-		4	Notification; Use Standby Pump			U65875-C01-0800(2/2)		0
LT-96060		ANALOG	Alm_HiHi - LT-96060 Sludge Holding Tank T-96000 Level Transmitter High High			2,2	m		4	Notification; stop sludge wasting			U65875-C01-0960		0
LT-96060		ANALOG	Alm_Hi - LT-96060 Sludge Holding Tank T-96000 Level Transmitter High			2	m		3	Notification to schedule sludge truck out			U65875-C01-0960		0

8.3 - I/O LIST

CUSTOMER: Meliadine STP
PROJECT NUMBER: U65875
DOCUMENT NUMBER: U65875-I11-0001

Created by: Philippe Leroux
Revised by: Etienne Roy
Date: 2016-08-10

Revision: 3

NAME	INSTRUMENT / DESCRIPTION	I/O ADDRESS	SIGNAL	PANNEL / JB	LOCATION	MODULE	P&ID #	Rev
	MAIN CONTROL PANEL (RACK 0)							
IX_MCP_AU	Main Control Panel Emergency Stop		24 VDC	MCP-102	2	BMXDDI3202K	NA	1
IX_MCP_RESET	Alarm Reset		24 VDC	MCP-102	2	BMXDDI3202K	NA	1
IX_MCP_120V	Panel 120V Detect		24 VDC	MCP-102	2	BMXDDI3202K	NA	1
Spare			24 VDC	MCP-102	2	BMXDDI3202K	NA	1
IX_LE_74068	Container Leak Detector		24 VDC	MCP-102	2	BMXDDI3202K	U65875-C01-0740	1
Spare			24 VDC	MCP-102	2	BMXDDI3202K	NA	1
Spare			24 VDC	MCP-102	2	BMXDDI3202K	NA	1
Spare			24 VDC	MCP-102	2	BMXDDI3202K	NA	1
IX_YA_83500	Sodium Hypochlorite Pump P-83500 Fault Feedback		24 VDC	MCP-102	2	BMXDDI3202K	U65875-C01-800 (1/2)	1
IX_YA_75000	Equalization Blower B-75000 Fault Feedback		24 VDC	MCP-102	2	BMXDDI3202K	U65875-C01-0750 (1/2)	1
IX_YI_75000	Equalization Blower B-75000 Running Feedback		24 VDC	MCP-102	2	BMXDDI3202K	U65875-C01-0750 (1/2)	1
IX_YA_75800	Sludge Blower B-75800 Fault Feedback		24 VDC	MCP-102	2	BMXDDI3202K	U65875-C01-0750 (2/2)	1
IX_YI_75800	Sludge Blower B-75800 Running Feedback		24 VDC	MCP-102	2	BMXDDI3202K	U65875-C01-0750 (2/2)	1
Spare			24 VDC	MCP-102	2	BMXDDI3202K	NA	1
Spare			24 VDC	MCP-102	2	BMXDDI3202K	NA	1
Spare			24 VDC	MCP-102	2	BMXDDI3202K	NA	1
IX_YA_74600_1	RAS/WAS Pump P-74600-1 Fault Feedback		24 VDC	MCP-102	2	BMXDDI3202K	U65875-C01-0740	1
IX_YI_74600_1	RAS/WAS Pump P-74600-1 Running Feedback		24 VDC	MCP-102	2	BMXDDI3202K	U65875-C01-0740	1
IX_YA_79000_1	Permeate Pump P-79000-1 Fault Feedback		24 VDC	MCP-102	2	BMXDDI3202K	U65875-C01-0740	1
IX_YI_79000_1	Permeate Pump P-79000-1 Running Feedback		24 VDC	MCP-102	2	BMXDDI3202K	U65875-C01-0740	1
IX_YA_91000_1	UV-91000-1 Fault Feedback		24 VDC	MCP-102	2	BMXDDI3202K	U65875-C01-0740	1
Spare			24 VDC	MCP-102	2	BMXDDI3202K	NA	1
Spare			24 VDC	MCP-102	2	BMXDDI3202K	NA	1
Spare			24 VDC	MCP-102	2	BMXDDI3202K	NA	1
IX_YA_74600_2	RAS/WAS Pump P-74600-2 Fault Feedback		24 VDC	MCP-102	2	BMXDDI3202K	U65875-C01-0740	1
IX_YI_74600_2	RAS/WAS Pump P-74600-2 Running Feedback		24 VDC	MCP-102	2	BMXDDI3202K	U65875-C01-0740	1
IX_YA_79000_2	Permeate Pump P-79000-2 Fault Feedback		24 VDC	MCP-102	2	BMXDDI3202K	U65875-C01-0740	1
IX_YI_79000_2	Permeate Pump P-79000-2 Running Feedback		24 VDC	MCP-102	2	BMXDDI3202K	U65875-C01-0740	1
IX_YA_91000_2	UV-91000-2 Fault Feedback		24 VDC	MCP-102	2	BMXDDI3202K	U65875-C01-0740	1
Spare			24 VDC	MCP-102	2	BMXDDI3202K	NA	1
Spare			24 VDC	MCP-102	2	BMXDDI3202K	NA	1
Spare			24 VDC	MCP-102	2	BMXDDI3202K	NA	1
IX_YA_75240A	Process Blower B-75240A Fault Feedback		24 VDC	MCP-102	3	BMXDDI3202K	U65875-C01-0750 (1/2)	1
IX_YI_75240A	Process Blower B-75240A Running Feedback		24 VDC	MCP-102	3	BMXDDI3202K	U65875-C01-0750 (1/2)	1
IX_YA_75400A	Membrane Blower B-75400A Fault Feedback		24 VDC	MCP-102	3	BMXDDI3202K	U65875-C01-0750 (2/2)	1
IX_YI_75400A	Membrane Blower B-75400A Running Feedback		24 VDC	MCP-102	3	BMXDDI3202K	U65875-C01-0750 (2/2)	1
IX_YA_79600A	Effluent Pump P-79600A Fault Feedback		24 VDC	MCP-102	3	BMXDDI3202K	U65875-C01-0790	1
IX_YI_79600A	Effluent Pump P-79600A Running Feedback		24 VDC	MCP-102	3	BMXDDI3202K	U65875-C01-0790	1
IX_YA_11200A	Fine Screen SCR-11200A Fault Feedback		24 VDC	MCP-102	3	BMXDDI3202K	U65875-C01-0110	2
IX_YI_11200A	Fine Screen SCR-11200A Running Feedback		24 VDC	MCP-102	3	BMXDDI3202K	U65875-C01-0110	2
IX_YA_12200A	Sump Pump P-12200A Fault Feedback		24 VDC	MCP-102	3	BMXDDI3202K	U65875-C01-0110	2
IX_YI_12200A	Sump Pump P-12200A Running Feedback		24 VDC	MCP-102	3	BMXDDI3202K	U65875-C01-0110	2
IX_YA_19200A	Equalization pump P-19200A Fault Feedback		24 VDC	MCP-102	3	BMXDDI3202K	U65875-C01-0190	1
IX_YI_19200A	Equalization pump P-19200A Running Feedback		24 VDC	MCP-102	3	BMXDDI3202K	U65875-C01-0190	1
IX_YA_80500A	Alkalinity Pump P-80500A Fault Feedback		24 VDC	MCP-102	3	BMXDDI3202K	U65875-C01-800 (2/2)	1
Spare			24 VDC	MCP-102	3	BMXDDI3202K	NA	1
Spare			24 VDC	MCP-102	3	BMXDDI3202K	NA	1
Spare			24 VDC	MCP-102	3	BMXDDI3202K	NA	1
IX_YA_75240B	Process Blower B-75240B Fault Feedback		24 VDC	MCP-102	3	BMXDDI3202K	U65875-C01-0750 (1/2)	1
IX_YI_75240B	Process Blower B-75240B Running Feedback		24 VDC	MCP-102	3	BMXDDI3202K	U65875-C01-0750 (1/2)	1
IX_YA_75400B	Membrane Blower B-75400B Fault Feedback		24 VDC	MCP-102	3	BMXDDI3202K	U65875-C01-0750 (2/2)	1
IX_YI_75400B	Membrane Blower B-75400B Running Feedback		24 VDC	MCP-102	3	BMXDDI3202K	U65875-C01-0750 (2/2)	1
IX_YA_79600B	Effluent Pump P-79600B Fault Feedback		24 VDC	MCP-102	3	BMXDDI3202K	U65875-C01-0790	1
IX_YI_79600B	Effluent Pump P-79600B Running Feedback		24 VDC	MCP-102	3	BMXDDI3202K	U65875-C01-0790	1
IX_YA_11200B	Fine Screen SCR-11200B Fault Feedback		24 VDC	MCP-102	3	BMXDDI3202K	U65875-C01-0110	2
IX_YI_11200B	Fine Screen SCR-11200B Running Feedback		24 VDC	MCP-102	3	BMXDDI3202K	U65875-C01-0110	2
IX_YA_12200B	Sump Pump P-12200B Fault Feedback		24 VDC	MCP-102	3	BMXDDI3202K	U65875-C01-0110	2
IX_YI_12200B	Sump Pump P-12200B Running Feedback		24 VDC	MCP-102	3	BMXDDI3202K	U65875-C01-0110	2
IX_YA_19200B	Equalization pump P-19200B Fault Feedback		24 VDC	MCP-102	3	BMXDDI3202K	U65875-C01-0190	1
IX_YI_19200B	Equalization pump P-19200B Running Feedback		24 VDC	MCP-102	3	BMXDDI3202K	U65875-C01-0190	1
IX_YA_80500B	Alkalinity Pump P-80500B Fault Feedback		24 VDC	MCP-102	3	BMXDDI3202K	U65875-C01-800 (2/2)	1
Spare			24 VDC	MCP-102	3	BMXDDI3202K	NA	1
Spare			24 VDC	MCP-102	3	BMXDDI3202K	NA	1
Spare			24 VDC	MCP-102	3	BMXDDI3202K	NA	1
OX_YC_74600_1	RAS/WAS Pump P-74600-1 Start Command		24 VDC	MCP-102	4	BMXDDO3202K	U65875-C01-0740	1
OX_YC_91000_1	UV-91000-1 Start Command		24 VDC	MCP-102	4	BMXDDO3202K	U65875-C01-0740	1
OX_YC_79000_1	Permeate Pump P-79000-1 Start Command		24 VDC	MCP-102	4	BMXDDO3202K	U65875-C01-0740	1
OX_FYO_79001_1	Valve FV-79001-1 Open Command		24 VDC	MCP-102	4	BMXDDO3202K	U65875-C01-0740	1
OX_FYC_79001_1	Valve FV-79001-1 Close Command		24 VDC	MCP-102	4	BMXDDO3202K	U65875-C01-0740	1
OX_FYO_79002_1	Valve FV-79002-1 Open Command		24 VDC	MCP-102	4	BMXDDO3202K	U65875-C01-0740	1
OX_FYC_79002_1	Valve FV-79002-1 Close Command		24 VDC	MCP-102	4	BMXDDO3202K	U65875-C01-0740	1
OX_FYO_79098_1	Valve FV-79098-1 Open Command		24 VDC	MCP-102	4	BMXDDO3202K	U65875-C01-0740	1
OX_FYC_79098_1	Valve FV-79098-1 Close Command		24 VDC	MCP-102	4	BMXDDO3202K	U65875-C01-0740	1
OX_FYO_79099_1	Valve FV-79099-1 Open Command		24 VDC	MCP-102	4	BMXDDO3202K	U65875-C01-0740	1
OX_FYC_79099_1	Valve FV-79099-1 Close Command		24 VDC	MCP-102	4	BMXDDO3202K	U65875-C01-0740	1
OX_FYO_96001_1	Valve FV-96001-1 Open Command		24 VDC	MCP-102	4	BMXDDO3202K	U65875-C01-0740	1
OX_FYC_96001_1	Valve FV-96001-1 Close Command		24 VDC	MCP-102	4	BMXDDO3202K	U65875-C01-0740	1
OX_FY_83598_1	Citric Acid Dosing Pump Valve FV-83598-1 Open Command		24 VDC	MCP-102	4	BMXDDO3202K	U65875-C01-0740	1
OX_FY_83798_1	Hypochlorite Dosing Pump Valve FV-83798-1 Open Command		24 VDC	MCP-102	4	BMXDDO3202K	U65875-C01-0740	1
Spare			24 VDC	MCP-102	4	BMXDDO3202K	NA	1
OX_YC_74600_2	RAS/WAS Pump P-74600-2 Start Command		24 VDC	MCP-102	4	BMXDDO3202K	U65875-C01-0740	1
OX_YC_91000_2	UV-91000-2 Start Command		24 VDC	MCP-102	4	BMXDDO3202K	U65875-C01-0740	1
OX_YC_79000_2	Permeate Pump P-79000-2 Start Command		24 VDC	MCP-102	4	BMXDDO3202K	U65875-C01-0740	1
OX_FYO_79001_2	Valve FV-79001-2 Open Command		24 VDC	MCP-102	4	BMXDDO3202K	U65875-C01-0740	1
OX_FYC_79001_2	Valve FV-79001-2 Close Command		24 VDC	MCP-102	4	BMXDDO3202K	U65875-C01-0740	1
OX_FYO_79002_2	Valve FV-79002-2 Open Command		24 VDC	MCP-102	4	BMXDDO3202K	U65875-C01-0740	1
OX_FYC_79002_2	Valve FV-79002-2 Close Command		24 VDC	MCP-102	4	BMXDDO3202K	U65875-C01-0740	1
OX_FYO_79098_2	Valve FV-79098-2 Open Command		24 VDC	MCP-102	4	BMXDDO3202K	U65875-C01-0740	1
OX_FYC_79098_2	Valve FV-79098-2 Close Command		24 VDC	MCP-102	4	BMXDDO3202K	U65875-C01-0740	1
OX_FYO_79099_2	Valve FV-79099-2 Open Command		24 VDC	MCP-102	4	BMXDDO3202K	U65875-C01-0740	1
OX_FYC_79099_2	Valve FV-79099-2 Close Command		24 VDC	MCP-102	4	BMXDDO3202K	U65875-C01-0740	1
OX_FYO_96001_2	Valve FV-96001-2 Open Command		24 VDC	MCP-102	4	BMXDDO3202K	U65875-C01-0740	1
OX_FYC_96001_2	Valve FV-96001-2 Close Command		24 VDC	MCP-102	4	BMXDDO3202K	U65875-C01-0740	1
OX_FY_83598_2	Citric Acid Pump Valve FV-83598-2 Open Command		24 VDC	MCP-102	4	BMXDDO3202K	U65875-C01-0740	1
OX_FY_83798_2	Hypochlorite Dosing Pump Valve FV-83798-2 Open Command		24 VDC	MCP-102	4	BMXDDO3202K	U65875-C01-0740	1
Spare			24 VDC	MCP-102	4	BMXDDO3202K	NA	1
OX_YC_75240A	Process Blower B-75240A Start Command		24 VDC	MCP-102	5	BMXDDO3202K	U65875-C01-0750 (1/2)	1
OX_YC_75400A	Membrane Blower B-75400A Start Command		24 VDC	MCP-102	5	BMXDDO3202K	U65875-C01-0750 (2/2)	1
OX_YC_79600A	Effluent Pump P-79600A Start Command		24 VDC	MCP-102	5	BMXDDO3202K	U65875-C01-0790	1
OX_YC_19200A	Equalization Pump P-19200A Start Command		24 VDC	MCP-102	5	BMXDDO3202K	U65875-C01-0190	1
OX_YC_75240B	Process Blower B-75240B Start Command		24 VDC	MCP-102	5	BMXDDO3202K	U65875-C01-0750 (1/2)	1
OX_YC_75400B	Membrane Blower B-75400B Start Command		24 VDC	MCP-102	5	BMXDDO3202K	U65875-C01-0750 (2/2)	1
OX_YC_79600B	Effluent Pump P-79600B Start Command		24 VDC	MCP-102	5	BMXDDO3202K	U65875-C01-0790	1
OX_YC_19200B	Equalization Pump P-19200B Start Command		24 VDC	MCP-102	5	BMXDDO3202K	U65875-C01-0190	1
OX_YC_75000	Equalization Blower B-75000 Start Command		24 VDC	MCP-102	5	BMXDDO3202K	U65875-C01-0750 (1/2)	1
OX_YC_75800	Sludge Blower B-75800 Start Command		24 VDC	MCP-102	5	BMXDDO3202K	U65875-C01-0750 (2/2)	1
OX_YC_11200A	Fine Screen SCR-11200A Start Command		24 VDC	MCP-102	5	BMXDDO3202K	U65875-C01-0110	2
OX_YC_12200A	Sump Pump P-12200A Start Command		24 VDC	MCP-102	5	BMXDDO3202K	U65875-C01-0110	2
OX_YC_11200B	Fine Screen SCR-11200B Start Command		24 VDC	MCP-102	5	BMXDDO3202K	U65875-C01-0110	2
OX_YC_12200B	Sump Pump P-12200B Start Command		24 VDC	MCP-102	5	BMXDDO3202K	U65875-C01-0110	2
Spare			24 VDC	MCP-102	5	BMXDDO3202K	NA	1
Spare			24 VDC	MCP-102	5	BMXDDO3202K	NA	1
OX_YC_80500A	Alkalinity Pump P-80500A Start Command		24 VDC	MCP-102	5	BMXDDO3202K	U65875-C01-800 (2/2)	1
OX_YC_80500B	Alkalinity Pump P-80500B Start Command		24 VDC	MCP-102	5	BMXDDO3202K	U65875-C01-800 (2/2)	1
OX_YC_83500	Sodium Hypochlorite Pump P-83500 Start Command		24 VDC	MCP-102	5	BMXDDO3202K	U65875-C01-800 (1/2)	1

NAME	INSTRUMENT / DESCRIPTION	I/O ADDRESS	SIGNAL	PANNEL / JB	LOCATION	MODULE	P&ID #	Rev
Spare			24 VDC	MCP-102	5	BMXDDO3202K	NA	1
OX_FYO_31026_1	Valve FV-31026-1 Open Command		24 VDC	MCP-102	5	BMXDDO3202K	U65875-C01-0740	1
OX_FYC_31026_1	Valve FV-31026-1 Close Command		24 VDC	MCP-102	5	BMXDDO3202K	U65875-C01-0740	1

NAME	INSTRUMENT / DESCRIPTION	I/O ADDRESS	SIGNAL	PANNEL / JB	LOCATION	MODULE	P&ID #	Rev
OX_FYO_74050_1	Valve FV-74050-2 Open Command		24 VDC	MCP-102	5	BMXDDO3202K	U65875-C01-0740	1
OX_FYC_74050_1	Valve FV-74050-2 Close Command		24 VDC	MCP-102	5	BMXDDO3202K	U65875-C01-0740	1
OX_FYO_31026_2	Valve FV-31026-2 Open Command		24 VDC	MCP-102	5	BMXDDO3202K	U65875-C01-0740	1
OX_FYC_31026_2	Valve FV-31026-2 Close Command		24 VDC	MCP-102	5	BMXDDO3202K	U65875-C01-0740	1
OX_FYO_74050_2	Valve FV-74050-2 Open Command		24 VDC	MCP-102	5	BMXDDO3202K	U65875-C01-0740	1
OX_FYC_74050_2	Valve FV-74050-2 Close Command		24 VDC	MCP-102	5	BMXDDO3202K	U65875-C01-0740	1
Spare			24 VDC	MCP-102	5	BMXDDO3202K	NA	1
Spare			24 VDC	MCP-102	5	BMXDDO3202K	NA	1
Spare			24 VDC	MCP-102	5	BMXDDO3202K	NA	1
Spare			24 VDC	MCP-102	5	BMXDDO3202K	NA	1
IX_FIT_11274	Waste Water Flow Indicating Transmitter to Equalization Tanks		4-20 ma	MCP-102	6	BMXAMI0810	U65875-C01-0190	1
IX_FIT_79074_1	Permeate Flow Indicating Transmitter Train 1		4-20 ma	MCP-102	6	BMXAMI0810	U65875-C01-0740	1
IX_FIT_74674_1	RAS/WAS Flow Indicating Transmitter Train 1		4-20 ma	MCP-102	6	BMXAMI0810	U65875-C01-0740	1
IX_FIT_79074_2	Permeate Flow Indicating Transmitter Train 2		4-20 ma	MCP-102	6	BMXAMI0810	U65875-C01-0740	1
IX_FIT_74674_2	RAS/WAS Flow Indicating Transmitter Train 2		4-20 ma	MCP-102	6	BMXAMI0810	U65875-C01-0740	1
IX_FIT_75474A	Air to Membrane Train 1 Flow Indicating Transmitter		4-20 ma	MCP-102	6	BMXAMI0810	U65875-C01-0750 (2/2)	1
IX_FIT_75474B	Air to Membrane Train 2 Flow Indicating Transmitter		4-20 ma	MCP-102	6	BMXAMI0810	U65875-C01-0750 (2/2)	1
Spare			4-20 ma	MCP-102	6	BMXAMI0810	NA	3
Spare			4-20 ma	MCP-102	7	BMXAMI0810	NA	3
IX_FIT_79274	Effluent Discharge Flow Indicating Transmitter		4-20 ma	MCP-102	7	BMXAMI0810	U65875-C01-0790	1
Spare			4-20 ma	MCP-102	7	BMXAMI0810	NA	1
Spare			4-20 ma	MCP-102	7	BMXAMI0810	NA	1
Spare			4-20 ma	MCP-102	7	BMXAMI0810	NA	1
Spare			4-20 ma	MCP-102	7	BMXAMI0810	NA	1
Spare			4-20 ma	MCP-102	7	BMXAMI0810	NA	1
Spare			4-20 ma	MCP-102	7	BMXAMI0810	NA	1
MAIN CONTROL PANEL (RACK 1)								
Spare			4-20 ma	MCP-102	0	BMXAMI0810	NA	2
Spare			4-20 ma	MCP-102	0	BMXAMI0810	NA	2
Spare			4-20 ma	MCP-102	0	BMXAMI0810	NA	2
IX_AIT_79089	Effluent Discharge Turbidity Indicating Transmitter		4-20 ma	MCP-102	0	BMXAMI0810	U65875-C01-0790	1
IX_AIT_79093	Effluent Discharge pH Indicating Transmitter		4-20 ma	MCP-102	0	BMXAMI0810	U65875-C01-0790	1
IX_AIT_91000_1	UV lamp UV-91000-1 intensity		4-20 ma	MCP-102	0	BMXAMI0810	U65875-C01-0740	1
IX_AIT_91000_2	UV lamp UV-91000-2 intensity		4-20 ma	MCP-102	0	BMXAMI0810	U65875-C01-0740	1
IX_SI_19200A	Equalization Pump P-19200A Speed Feedback		4-20 ma	MCP-102	0	BMXAMI0810	U65875-C01-0190	1
IX_SI_19200B	Equalization Pump P-19200B Speed Feedback		4-20 ma	MCP-102	1	BMXAMI0810	U65875-C01-0190	1
IX_SI_79000_1	Permeate Pump P-79000-1 Speed Feedback		4-20 ma	MCP-102	1	BMXAMI0810	U65875-C01-0740	1
IX_SI_79000_2	Permeate Pump P-79000-2 Speed Feedback		4-20 ma	MCP-102	1	BMXAMI0810	U65875-C01-0740	1
Spare			4-20 ma	MCP-102	1	BMXAMI0810	NA	1
Spare			4-20 ma	MCP-102	1	BMXAMI0810	NA	1
Spare			4-20 ma	MCP-102	1	BMXAMI0810	NA	1
Spare			4-20 ma	MCP-102	1	BMXAMI0810	NA	1
Spare			4-20 ma	MCP-102	1	BMXAMI0810	NA	1
IX_LT_19060A	Equalization Tank T-19000A Level Transmitter		4-20 ma	MCP-102	2	BMXAMI0810	U65875-C01-0190	1
IX_LT_19060B	Equalization Tank T-19000B Level Transmitter		4-20 ma	MCP-102	2	BMXAMI0810	U65875-C01-0190	1
IX_LT_72060	Aerobic Tank T-73000 Level Transmitter		4-20 ma	MCP-102	2	BMXAMI0810	U65875-C01-0720	1
IX_LT_74060_1	Membrane Tank T-74000-1 Level Transmitter		4-20 ma	MCP-102	2	BMXAMI0810	U65875-C01-0740	1
IX_LT_74060_2	Membrane Tank T-74000-2 Level Transmitter		4-20 ma	MCP-102	2	BMXAMI0810	U65875-C01-0740	1
IX_LT_79060	Permeate Tank T-79200 Level Transmitter		4-20 ma	MCP-102	2	BMXAMI0810	U65875-C01-0790	1
Spare			4-20 ma	MCP-102	2	BMXAMI0810	NA	1
Spare			4-20 ma	MCP-102	2	BMXAMI0810	NA	1
IX_PT_79045_1	Pressure Transmitter Train 1		4-20 ma	MCP-102	3	BMXAMI0810	U65875-C01-0740	1
IX_PT_79045_2	Pressure Transmitter Train 2		4-20 ma	MCP-102	3	BMXAMI0810	U65875-C01-0740	1
Spare			4-20 ma	MCP-102	3	BMXAMI0810	NA	1
Spare			4-20 ma	MCP-102	3	BMXAMI0810	NA	1
Spare			4-20 ma	MCP-102	3	BMXAMI0810	NA	1
Spare			4-20 ma	MCP-102	3	BMXAMI0810	NA	1
Spare			4-20 ma	MCP-102	3	BMXAMI0810	NA	1
Spare			4-20 ma	MCP-102	3	BMXAMI0810	NA	1
OX_SC_80500A	Alkalinity Pump P-80500A Speed Command		4-20 ma	MCP-102	4	BMXAMO0410	U65875-C01-800 (2/2)	1
OX_SC_80500B	Alkalinity Pump P-80500B Speed Command		4-20 ma	MCP-102	4	BMXAMO0410	U65875-C01-800 (2/2)	1
OX_SC_83500	Sodium Hypochlorite Pump P-83500 Speed Command		4-20 ma	MCP-102	4	BMXAMO0410	U65875-C01-800 (1/2)	1
Spare			4-20 ma	MCP-102	4	BMXAMO0410	NA	1
OX_SC_19200A	Equalization Pump P-19200A Speed Command		4-20 ma	MCP-102	5	BMXAMO0410	U65875-C01-0190	1
OX_SC_19200B	Equalization Pump P-19200B Speed Command		4-20 ma	MCP-102	5	BMXAMO0410	U65875-C01-0190	1
Spare			4-20 ma	MCP-102	5	BMXAMO0410	NA	1
Spare			4-20 ma	MCP-102	5	BMXAMO0410	NA	1
OX_SC_79000_1	Permeate Pump P-79000-1 Speed Command		4-20 ma	MCP-102	6	BMXAMO0410	U65875-C01-0740	1
OX_SC_79000_2	Permeate Pump P-79000-2 Speed Command		4-20 ma	MCP-102	6	BMXAMO0410	U65875-C01-0740	1
Spare			4-20 ma	MCP-102	6	BMXAMO0410	NA	1
Spare			4-20 ma	MCP-102	6	BMXAMO0410	NA	1
REMOTE IO PANEL								
Spare			24 VDC	RIO-101	1	BMXDDI3202K	NA	1
Spare			24 VDC	RIO-101	1	BMXDDI3202K	NA	1
IX_RIO_120V	Panel 120V Detect		24 VDC	RIO-101	1	BMXDDI3202K	NA	1
Spare			24 VDC	RIO-101	1	BMXDDI3202K	NA	1
IX_LE_11068	Container Leak Detector		24 VDC	RIO-101	1	BMXDDI3202K	U65875-C01-0110	1
Spare			24 VDC	RIO-101	1	BMXDDI3202K	NA	1
Spare			24 VDC	RIO-101	1	BMXDDI3202K	NA	1
Spare			24 VDC	RIO-101	1	BMXDDI3202K	NA	1
IX_LSL_12061	Screened Water Tank T-12000 Low Level Switch		24 VDC	RIO-101	1	BMXDDI3202K	U65875-C01-0110	1
IX_LSH_12062	Screened Water Tank T-12000 High Level Switch		24 VDC	RIO-101	1	BMXDDI3202K	U65875-C01-0110	1
Spare			24 VDC	RIO-101	1	BMXDDI3202K	NA	1
Spare			24 VDC	RIO-101	1	BMXDDI3202K	NA	1
IX_YA_83700	Citric Acid Pump P-83700 Fault Feedback		24 VDC	RIO-101	1	BMXDDI3202K	U65875-C01-800 (1/2)	1
Spare			24 VDC	RIO-101	1	BMXDDI3202K	NA	1
Spare			24 VDC	RIO-101	1	BMXDDI3202K	NA	1
Spare			24 VDC	RIO-101	1	BMXDDI3202K	NA	1
Spare			24 VDC	RIO-101	1	BMXDDI3202K	NA	1
Spare			24 VDC	RIO-101	1	BMXDDI3202K	NA	1
Spare			24 VDC	RIO-101	1	BMXDDI3202K	NA	1
Spare			24 VDC	RIO-101	1	BMXDDI3202K	NA	1
Spare			24 VDC	RIO-101	1	BMXDDI3202K	NA	1
Spare			24 VDC	RIO-101	1	BMXDDI3202K	NA	1
Spare			24 VDC	RIO-101	1	BMXDDI3202K	NA	1
Spare			24 VDC	RIO-101	1	BMXDDI3202K	NA	1
Spare			24 VDC	RIO-101	1	BMXDDI3202K	NA	1
Spare			24 VDC	RIO-101	1	BMXDDI3202K	NA	1
Spare			24 VDC	RIO-101	1	BMXDDI3202K	NA	1
Spare			24 VDC	RIO-101	1	BMXDDI3202K	NA	1
Spare			24 VDC	RIO-101	1	BMXDDI3202K	NA	1
Spare			24 VDC	RIO-101	1	BMXDDI3202K	NA	1
Spare			24 VDC	RIO-101	1	BMXDDI3202K	NA	1
Spare			24 VDC	RIO-101	1	BMXDDI3202K	NA	1
Spare			24 VDC	RIO-101	1	BMXDDI3202K	NA	1
Spare			24 VDC	RIO-101	1	BMXDDI3202K	NA	1
Spare			24 VDC	RIO-101	1	BMXDDI3202K	NA	1
Spare			24 VDC	RIO-101	1	BMXDDI3202K	NA	1
Spare			24 VDC	RIO-101	1	BMXDDI3202K	NA	1
Spare			24 VDC	RIO-101	1	BMXDDI3202K	NA	1
Spare			24 VDC	RIO-101	1	BMXDDI3202K	NA	1
Spare			24 VDC	RIO-101	1	BMXDDI3202K	NA	1
Spare			24 VDC	RIO-101	1	BMXDDI3202K	NA	1

NAME	INSTRUMENT / DESCRIPTION	I/O ADDRESS	SIGNAL	PANNEL / JB	LOCATION	MODULE	P&ID #	Rev
OX_FY_11221A	Fine Screens A Inlet Control Valve FV-11221A Open Command		24 VDC	RIO-101	2	BMXDDO3202K	U65875-C01-0110	1
OX_FY_11221B	Fine Screens A Inlet Control Valve FV-11221B Open Command		24 VDC	RIO-101	2	BMXDDO3202K	U65875-C01-0110	1
OX_FY_11221C	Fine Screens B Inlet Control Valve FV-11221C Open Command		24 VDC	RIO-101	2	BMXDDO3202K	U65875-C01-0110	1
OX_FY_11221D	Fine Screens B Inlet Control Valve FV-11221D Open Command		24 VDC	RIO-101	2	BMXDDO3202K	U65875-C01-0110	1
Spare			24 VDC	RIO-101	2	BMXDDO3202K	NA	1
Spare			24 VDC	RIO-101	2	BMXDDO3202K	NA	1
OX_YC_83700	Citric Acid Pump P-83700 Start Command		24 VDC	RIO-101	2	BMXDDO3202K	U65875-C01-800 (1/2)	1
Spare			24 VDC	RIO-101	2	BMXDDO3202K	NA	1
Spare			24 VDC	RIO-101	2	BMXDDO3202K	NA	1
Spare			24 VDC	RIO-101	2	BMXDDO3202K	NA	1
Spare			24 VDC	RIO-101	2	BMXDDO3202K	NA	1
Spare			24 VDC	RIO-101	2	BMXDDO3202K	NA	1
Spare			24 VDC	RIO-101	2	BMXDDO3202K	NA	1
Spare			24 VDC	RIO-101	2	BMXDDO3202K	NA	1
Spare			24 VDC	RIO-101	2	BMXDDO3202K	NA	1
Spare			24 VDC	RIO-101	2	BMXDDO3202K	NA	1
Spare			24 VDC	RIO-101	2	BMXDDO3202K	NA	1
Spare			24 VDC	RIO-101	2	BMXDDO3202K	NA	1
Spare			24 VDC	RIO-101	2	BMXDDO3202K	NA	1
Spare			24 VDC	RIO-101	2	BMXDDO3202K	NA	1
Spare			24 VDC	RIO-101	2	BMXDDO3202K	NA	1
Spare			24 VDC	RIO-101	2	BMXDDO3202K	NA	1
Spare			24 VDC	RIO-101	2	BMXDDO3202K	NA	1
Spare			24 VDC	RIO-101	2	BMXDDO3202K	NA	1
Spare			24 VDC	RIO-101	2	BMXDDO3202K	NA	1
Spare			24 VDC	RIO-101	2	BMXDDO3202K	NA	1
Spare			24 VDC	RIO-101	2	BMXDDO3202K	NA	1
Spare			24 VDC	RIO-101	2	BMXDDO3202K	NA	1
IX_FIT_19274	Equalized Water From Equalization Tank Flow Indicating Transmitter		4-20 ma	RIO-101	3	BMXAMI0810	U65875-C01-0110	1
IX_FIT_12274	Screened Water to Aerobic Tank Flow Indicating Transmitter		4-20 ma	RIO-101	3	BMXAMI0810	U65875-C01-0110	1
IX_FIT_75074	Air to Equalization Tank Flow Indicator Transmitter		4-20 ma	RIO-101	3	BMXAMI0810	U65875-C01-0750 (1/2)	3
IX_FIT_75274	Air to Aerobic Tank Flow Indicating Transmitter		4-20 ma	RIO-101	3	BMXAMI0810	U65875-C01-0750 (1/2)	3
IX_AIT_11094	Screened Water to Aerobic Tank pH Indicating Transmitter		4-20 ma	RIO-101	3	BMXAMI0810	U65875-C01-0110	1
IX_AIT_72092	Water to Membrane Tank Temperature Indicating Transmitter		4-20 ma	RIO-101	3	BMXAMI0810	U65875-C01-0720	2
IX_AIT_72093	Water to Membrane Tank pH Indicating Transmitter		4-20 ma	RIO-101	3	BMXAMI0810	U65875-C01-0720	2
IX_AIT_72094	Water to Membrane Tank Dissolved Oxygen Indicating Transmitter		4-20 ma	RIO-101	3	BMXAMI0810	U65875-C01-0720	2
IX_LT_12060	Screened Water Tank T-12000 Level Transmitter		4-20 ma	RIO-101	4	BMXAMI0810	U65875-C01-0110	1
IX_LT_96060	Sludge Holding Tank T-96000 Level Transmitter		4-20 ma	RIO-101	4	BMXAMI0810	U65875-C01-0960	1
IX_FIT_75874	Sludge Aeration Air Flow Indicating Transmitter (2-WIRE)		4-20 ma	RIO-101	4	BMXAMI0810	U65875-C01-0750 (2/2)	2
Spare			4-20 ma	RIO-101	4	BMXAMI0810	NA	1
Spare			4-20 ma	RIO-101	4	BMXAMI0810	NA	1
Spare			4-20 ma	RIO-101	4	BMXAMI0810	NA	1
Spare			4-20 ma	RIO-101	4	BMXAMI0810	NA	1
Spare			4-20 ma	RIO-101	4	BMXAMI0810	NA	1
OX_SC_83700	Citric Acid Pump P-83700 Speed Command		4-20 ma	RIO-101	5	BMXAMO0410	U65875-C01-800 (1/2)	1
Spare			4-20 ma	RIO-101	5	BMXAMO0410	U65875-C01-800 (2/2)	1
Spare			4-20 ma	RIO-101	5	BMXAMO0410	U65875-C01-800 (1/2)	1
Spare			4-20 ma	RIO-101	5	BMXAMO0410	U65875-C01-800 (1/2)	1

SECTION 9 - DRAWINGS AND DIAGRAMS

9.1 - PIPING AND INSTRUMENTATION DIAGRAMS (P&IDS)

VALVE SYMBOLS

N.OPEN N.CLOSED

- BALL
- V-BALL
- BUTTERFLY
- DIAPHRAGM
- GATE
- GLOBE
- NEEDLE
- PLUG
- SAMPLE/DRAIN
- CHECK
- BACKFLOW PREVENTER
- 3-WAY, 4-WAY
- PRESSURE REGULATING
- BACK PRESSURE REGULATING
- FLOW CONTROL
- 2-WAY SOLENOID
- 3-WAY SOLENOID
- 4-WAY SOLENOID
- AIR RELEASE
- VACUUM BREAKER
- PRESSURE RELEASE
- SLUICE GATE/WEIR

VALVE ACTUATOR SYMBOLS

- PNEUMATIC (FAIL LAST POSITION)
- PNEUMATIC FAIL CLOSE
- PNEUMATIC FAIL OPEN
- ELECTRIC
- DIAPHRAGM
- POSITIONER (ANY ACTUATOR TYPE)
- HAND OVERRIDE (ANY ACTUATOR TYPE)
- TRAVEL STOPS (ANY ACTUATOR TYPE)

FLOWMETER SYMBOLS

INTEGRAL | CLOSE COUPLED | REMOTE

- MAGNETIC
- PADDLE
- VORTE□
- DP/ORIFICE
- THERMAL
- ROTAMETER

INSTRUMENTATION SYMBOLS

LOCALLY MOUNTED	IN CONTROL PANEL	DESCRIPTION
		DISCRETE INSTRUMENT
		PRIMARY PLC OR DCS SHARED CONTROL
		SECONDARY PLC OR DCS SHARED CONTROL
		COMPUTER FUNCTION

INSTRUMENT FUNCTIONS

- K — SIGNAL PROCESSING FUNCTION
- A/M — AUTO/MANUAL
- Σ — ADDITION/SUMMATION
- Δ — DIFFERENTIAL
- I — INTERLOCK LOGIC FUNCTION
- ⅀ — AVERAGING

INSTRUMENT CONNECTIONS

- SOCKETWELD
- THREADED
- WELDED

PIPING SYMBOLS

- FLANGED CONNECTION
- THREADED CONNECTION
- BLIND FLANGE
- DOUBLE CONTAINMENT
- □UICK DISCONNECT VICTAULIC
- □" INSULATION THICKNESS INSULATION
- □UICK DISCONNECT CAMLOK
- □" INSULATION THICKNESS E HEAT TRACING E□ELECTRIC S□STEAM G□GLYCOL
- CAPPED PIPE END
- UNION
- DRAIN OUTLET
- E□PANSION/FLE□IBLE/ ISOLATION □OINT
- REDUCER
- ECCENTRIC REDUCER

PIPING ABBREVIATIONS

316 SS	316 STAINLESS STEEL
304 SS	304 STAINLESS STEEL
316L SS	LOW CARBON 316 STAINLESS STEEL
304L SS	LOW CARBON 304 STAINLESS STEEL
CPVC	CHLORINATED POLYVINYL CHLORIDE
CS	CARBON STEEL
DI	DUCTILE IRON
HDPE	HIGH-DENSITY POLYETHYLENE
PE	POLYETHYLENE
PVC	POLYVINYL CHLORIDE
RLCS	RUBBER LINED CARBON STEEL
SCH.	SCHEDULE
SDR	STANDARD DIMENSION RATIO
CML	CEMENT MORTAR LINED

LINE SYMBOLOGY

- MAIN PROCESS LINE
- SECONDARY PROCESS LINE
- PROCESS LINE, BY OTHERS
- COMM LINK (E□. PLC TO HMI)
- COMM LINK (E□. PLC TO DCS)
- ELECTRIC WIRING
- PNEUMATIC LINE
- LINE □UMPER
- PIPE DISCONTINUATION
- FLOW DIRECTION ARROWS
- 4" 316 SS SCH.10 — LINES SI□E/ MATERIAL IDENTIFIER
- SKID BOUNDARY — SKID BY H_2O I□□□a□□ — BY OTHERS
- REVISION
- LINES TO/FROM OTHER SHEETS — DESCRIPTION — C01-0001 SHT 1 — DESTINATION

PUMP SYMBOLS

- CENTRIFUGAL
- CHEMICAL METERING
- DIAPHRAGM
- POSITIVE DISPLACEMENT
- VACUUM
- SUBMERSIBLE OR FLOATING
- VERTICAL TURBINE
- PERISTALTIC/HOSE

MISCELLANEOUS E□UIPMENT SYMBOLS

- CARTRIDGE FILTER HOUSING
- AUTOMATIC STRAINER
- SILENCER
- MI□ER
- STATIC MI□ER
- RESIN TRAP
- MOTOR
- EDUCTOR OR VENTURI
- Y STRAINER
- CONICAL OR TEMPORARY STRAINER
- PULSATION DAMPENER
- DIAPHRAGM
- FLOW ORIFICE
- AIR COMPRESSOR
- RUPTURE DISK (PRESSURE)
- RUPTURE DISK (VACUUM)
- SPECTACLE BLIND (NORMALLY OPEN, NORMALLY CLOSED)
- IN□ECTION □UILL
- FILTER
- REFRIGERATED AIR DRYER
- TANK
- MMF TANK
- IMMERSED HEATER
- IN-LINE HEATER
- ULTRASONIC LEVEL TRANSMITTER
- FLOAT-STYLE LEVEL TRANSMITTER
- ST-□□□□ CHEMICAL CONTAINMENT
- CALIBRATION COLUMN
- MEMBRANE
- UV STERILI□ER
- DIFFUSERS:
- COARSE BUBBLE
- FINE BUBBLE
- POSITIVE DISPLACEMENT BLOWER
- REGENERATIVE BLOWER
- CENTRIFUGAL BLOWER
- TURBOCHARGER
- BIO-WHEEL
- MANWAY

FLOW INSTRUMENTS

FAH	FLOW ALARM HIGH
FAL	FLOW ALARM LOW
FCV	FLOW CONTROL VALVE
FE	FLOW ELEMENT
FI	FLOW INDICATOR
FIC	FLOW INDICATING CONTROLLER
FIT	FLOW INDICATING TRANSMITTER
FR	FLOW RECORDING
FSH	FLOW SWITCH HIGH
FSL	FLOW SWITCH LOW
FV	FLOW CONTROL OR ON/OFF VALVE
F□	FLOW TOTALI□ER
F□	ELEMENT CONTROLLED BY FLOW
FY	FLOW SIGNAL CONVERT, I/P, OR SOLN

PRESSURE INSTRUMENTS

PAH	PRESSURE ALARM HIGH
PAL	PRESSURE ALARM LOW
PC	PRESSURE CONTROLLER
PCV	SELF REG PRESS CONTROL VALVE
PDH	DIFFERENTIAL PRESSURE HIGH
PDI	DIFFERENTIAL PRESSURE INDICATOR
PDIT	DIFF PRESS INDICATING TRANSMITTER
PDSH	DIFFERENTIAL PRESS SWITCH HIGH
PG	PRESSURE GAUGE
PI	PRESSURE INDICATOR
PIC	PRESSURE INDICATING CONTROLLER
PIT	PRESSURE INDICATING TRANSMITTER
PSH	PRESSURE SWITCH HIGH
PSL	PRESSURE SWITCH LOW
PSV	SELF REG PRESS SAFETY VALVE
PT	PRESSURE TRANSMITTER
P□	ELEMENT CONTROLLED BY PRESSURE
PY	PRESS SIGNAL CONVERT, I/P, OR SOLN
PSLH	PRESSURE SWITCH LOW HIGH

LEVEL INSTRUMENTS

LAH	LEVEL ALARM HIGH
LAL	LEVEL ALARM LOW
LCV	SELF REG LEVEL CONTROL VALVE
LE	LEVEL ELEMENT
LG	LEVEL GAUGE
LI	LEVEL INDICATOR
LIC	LEVEL INDICATING CONTROLLER
LIT	LEVEL INDICATING TRANSMITTER
LSH	LEVEL SWITCH HIGH
LSL	LEVEL SWITCH LOW
LT	LEVEL TRANSMITTER
LV	LEVEL CONTROL OR ON/OFF VALVE
L□	ELEMENT CONTROLLED BY LEVEL
LY	LEVEL SIGNAL CONVERT, I/P, OR SOLN

TEMPERATURE INSTRUMENTS

TAH	TEMPERATURE ALARM HIGH
TAL	TEMPERATURE ALARM LOW
TC	TEMPERATURE CONTROLLER
TE	TEMPERATURE ELEMENT
TG	TEMPERATURE GAUGE
TI	TEMPERATURE INDICATOR
TIC	TEMP INDICATING CONTROLLER
TIT	TEMP INDICATING TRANSMITTER
TSH	TEMPERATURE SWITCH HIGH
TSL	TEMPERATURE SWITCH LOW
TT	TEMPERATURE TRANSMITTER
TV	TEMP CONTROL OR ON/OFF VALVE
T□	ELEMENT CONTROLLED BY TEMP
TY	TEMP SIGNAL CONVERT, I/P, OR SOLN

ELECTRICAL ABBREVIATIONS

□B	□UNCTION BO□
MCP	MAIN CONTROL PANEL
RIO	REMOTE I/O PANEL
PP	POWER PANEL
VFD	VARIABLE FRE□UENCY DRIVE
HOA	HAND-OFF-AUTO

ANALYTICAL INSTRUMENTS

AAH	ANALYTICAL ALARM HIGH
AAL	ANALYTICAL ALARM LOW
AE	ANALYTICAL ELEMENT
AI	ANALYTICAL INDICATOR
AIC	ANAL INDICATING CONTROLLER
AIT	ANAL INDICATING TRANSMITTER
ASH	ANALYTICAL SWITCH HIGH
ASL	ANALYTICAL SWITCH LOW
AT	ANALYTICAL TRANSMITTER
A□	ELEMENT CONTROLLED BY ANALYTICAL
AY	ANALYTICAL SIGNAL CONVERT, I/P, OR SOL

MISCELLANEOUS INSTRUMENTS

HS	HAND SWITCH
HI	HAND SWITCH POSITION INDICATOR
II	CURRENT INDICATOR
□□I	TOTALI□ER INDICATOR
SC	SPEED CONTROLLER
SI	SPEED INDICATOR
YA	MOTOR ALARM
YC	MOTOR CONTROL
YI	MOTOR ON/OFF INDICATOR
□IC	SWITCH CLOSE INDICATOR
□IO	SWITCH OPEN INDICATOR
□SC	POSITION SWITCH CLOSED
□SO	POSITION SWITCH OPEN
□T	POSITION TRANSMITTER
□I	POSITION INDICATOR

VALVES □ E□UIPMENT

AC	AIR COMPRESSOR
ARV	AIR RELEASE VALVE
AS	AIR SUPPLY
B	BLOWER
BT	BULK TOTE
CBD	COARSE BUBBLE DIFFUSER
CV	CHECK VALVE
ED	EDUCTOR
F	FILTER
FBD	FINE BUBBLE DIFFUSER
FL	FAIL LAST (DEFAULT IF NOT SHOWN)
FC	FAIL CLOSED
FO	FAIL OPEN
F□G	CALIBRATION COLUMN
H	HEATER
HCV	HAND CONTROL VALVE
HTR	HEATER
HV	HAND VALVE
M	MOTOR
M□	MI□ER
P	PUMP
RT	RESIN TRAP
ST	SPILL TANK
STR	STRAINER
T	TANK
UV	ULTRAVIOLET
HV	HAND VALVE
MV	MULTI FUNCTION VALVE

OTHER ABBREVIATIONS

CAP	CAPACITANCE
CIP	CLEAN-IN-PLACE
COND	CONDUCTIVITY
DO2	DISSOLVED O□YGEN
ESP	EMERGENCY STOP
IA	INSTRUMENT AIR
I/P	CURRENT TO PNEUMATIC CONVERTER
ORP	O□IDATION REDUCTION POTENTIAL
pH	HYDROGEN ION
RES	RESISTIVITY
RTD	RESISTANCE TEMP DETECTOR
SOL	SOLENOID
SP	SET POINT
□S	MICROSIEMENS
MIT	MEMBRANE INTEGRITY TEST

NOTE:
THE INFORMATION, SPECIFICATIONS AND DATA SHOWN ON THIS PRINT ARE FURNISHED BY AND ARE TO REMAIN THE PROPERTY OF H_2O INNOVATION.

THE PURPOSE OF THIS DOCUMENT IS TO FACILITATE THE INSTALLATION, MAINTENANCE AND OPERATION OF THE EQUIPMENT REPRESENTED BY SAID PRINT. NO OTHER USE OF THIS DOCUMENT SHALL BE MADE WITHOUT EXPRESS WRITTEN CONSENT FROM H_2O INNOVATION.

DRAWING REVISION

REV	DATE (DD/MM/YY)	REVISION DESCRIPTION	DRAWN	CHKD	ENG	APPVD
04	02/08/2016	REVISED AS PER COMMENT	M.P.	H.S.	H.C.	H.C.
03	25/07/2016	REVISED AS PER COMMENT	M.P.	H.S.	H.C.	H.C.
02	13/07/2016	REVISED AS PER COMMENT	M.P.	H.S.	H.C.	H.C.
01	11/07/2016	CHANGE SUMP TANK BALL TO GATE VALVE,SOLENOID TO ELECTRIC VALVE,TURBIDITY METER TO 120V	M.P.	H.S.	H.C.	H.C.
00	21/06/2016	PRELIMINARY	M.P.	H.S.	H.C.	H.C.

h2o innovation — knowledge to share.du savoir à partager

UNLESS NOTED OTHERWISE
INTERPRETATION: ANSI Y14.5
TOLERANCES
FRACTIONS: ±1/64"
DECIMALS 0.X: ±0.030
0.XX: ±0.015
ANGLES: ±0.5°
HOLE SIZES: +1/64" -0"
HOLE CENTERS: ±1/64"
DO NOT SCALE PRINTS

MELIADINE STP

216 M3/DAY

TITLE: PROCESS AND INSTRUMENTION DIAGRAMS LEGEND

SCALE:	DRAWING NUMBER:	REVISION
N/A	U65875--C01-0001 SHEET: 1 □1	04

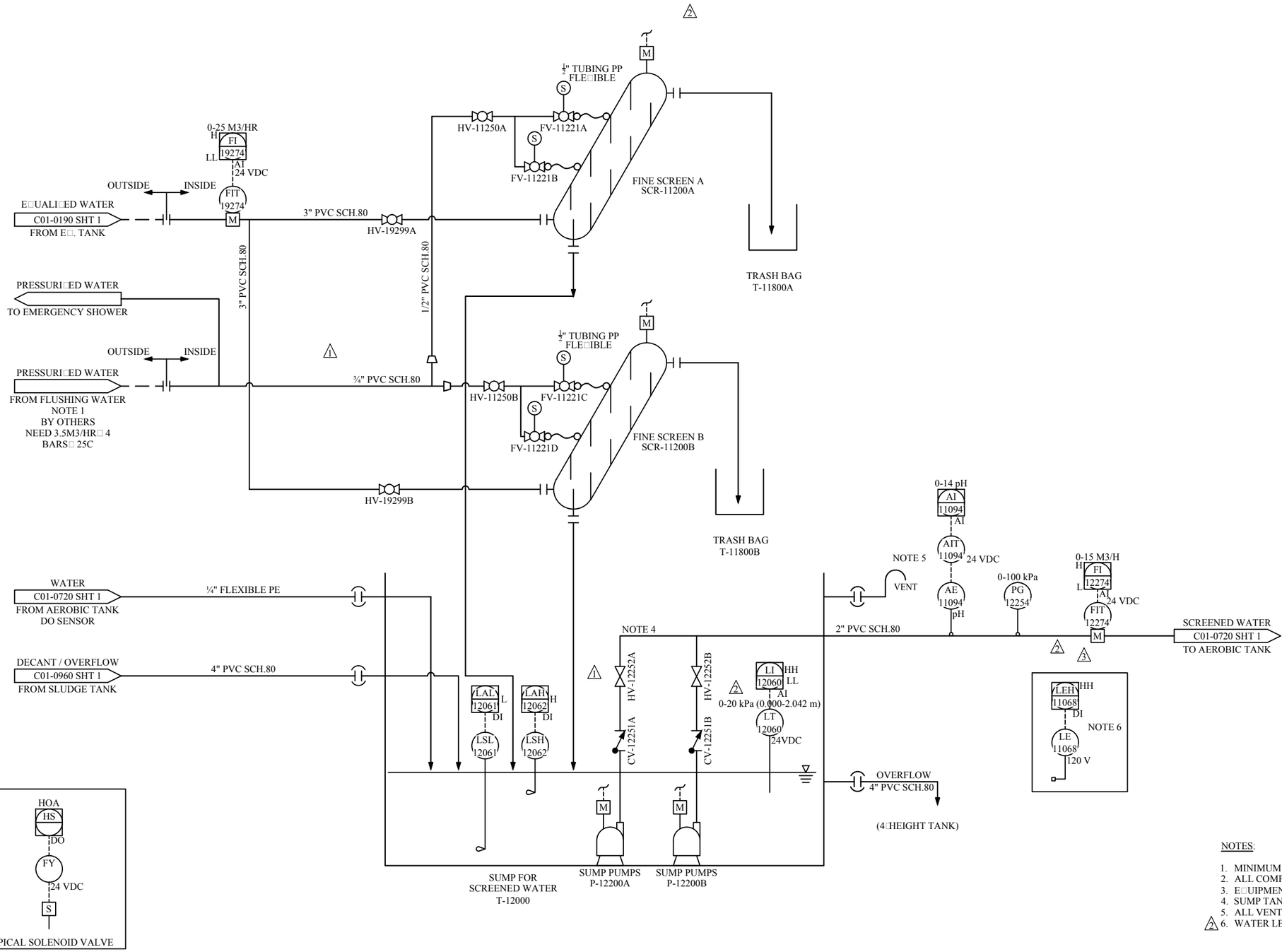

NOTES:

1. MINIMUM PRESSURE OF 40 PSIG REQUIRED.
2. ALL COMPONANTS GOING IN TO THE RIO-101.
3. EQUIPMENT TO BE PLACED IN CONTAINER #1.
4. SUMP TANK WITH COVER.
5. ALL VENT TO OUTSIDE.
6. WATER LEAK DETECTOR.

NOTE:
THE INFORMATION, SPECIFICATIONS AND DATA SHOWN ON THIS PRINT ARE FURNISHED BY AND ARE TO REMAIN THE PROPERTY OF H_2O INNOVATION.

THE PURPOSE OF THIS DOCUMENT IS TO FACILITATE THE INSTALLATION, MAINTENANCE AND OPERATION OF THE EQUIPMENT REPRESENTED BY SAID PRINT. NO OTHER USE OF THIS DOCUMENT SHALL BE MADE WITHOUT EXPRESS WRITTEN CONSENT FROM H_2O INNOVATION.

DRAWING REVISION

REV	DATE (DD/MM/YYYY)	REVISION DESCRIPTION	DRAWN	CHKD	ENG	APPVD
04	02/08/2016	REVISED AS PER COMMENT	M.P.	H.S.	H.C.	H.C.
03	25/07/2016	REVISED AS PER COMMENT	M.P.	H.S.	H.C.	H.C.
02	13/07/2016	REVISED AS PER COMMENT	M.P.	H.S.	H.C.	H.C.
01	11/07/2016	CHANGE SUMP TANK BALL TO GATE VALVE,SOLENOID TO ELECTRIC VALVE,TURBIDITY METER TO 120V	M.P.	H.S.	H.C.	H.C.
00	21/06/2016	PRELIMINARY	M.P.	H.S.	H.C.	H.C.

h2o innovation
knowledge to share @ savoir à partager

UNLESS NOTED OTHERWISE
INTERPRETATION: ANSI Y14.5
TOLERANCES
FRACTIONS: ±1/64"
DECIMALS 0.X: ±0.030
0.XX: ±0.015
ANGLES: ±0.5°
HOLE SIZES: ±1/64"
HOLE CENTERS: ±1/64"
DO NOT SCALE PRINTS

MELIADINE STP

216 M3/DAY

TITLE:
RAW WATER SCREENING
PROCESS & INSTRUMENTATION DIAGRAM

SCALE:	DRAWING NUMBER:	REVISION
N/A	U65875-C01-0110	04
	SHEET: 1 OF 1	

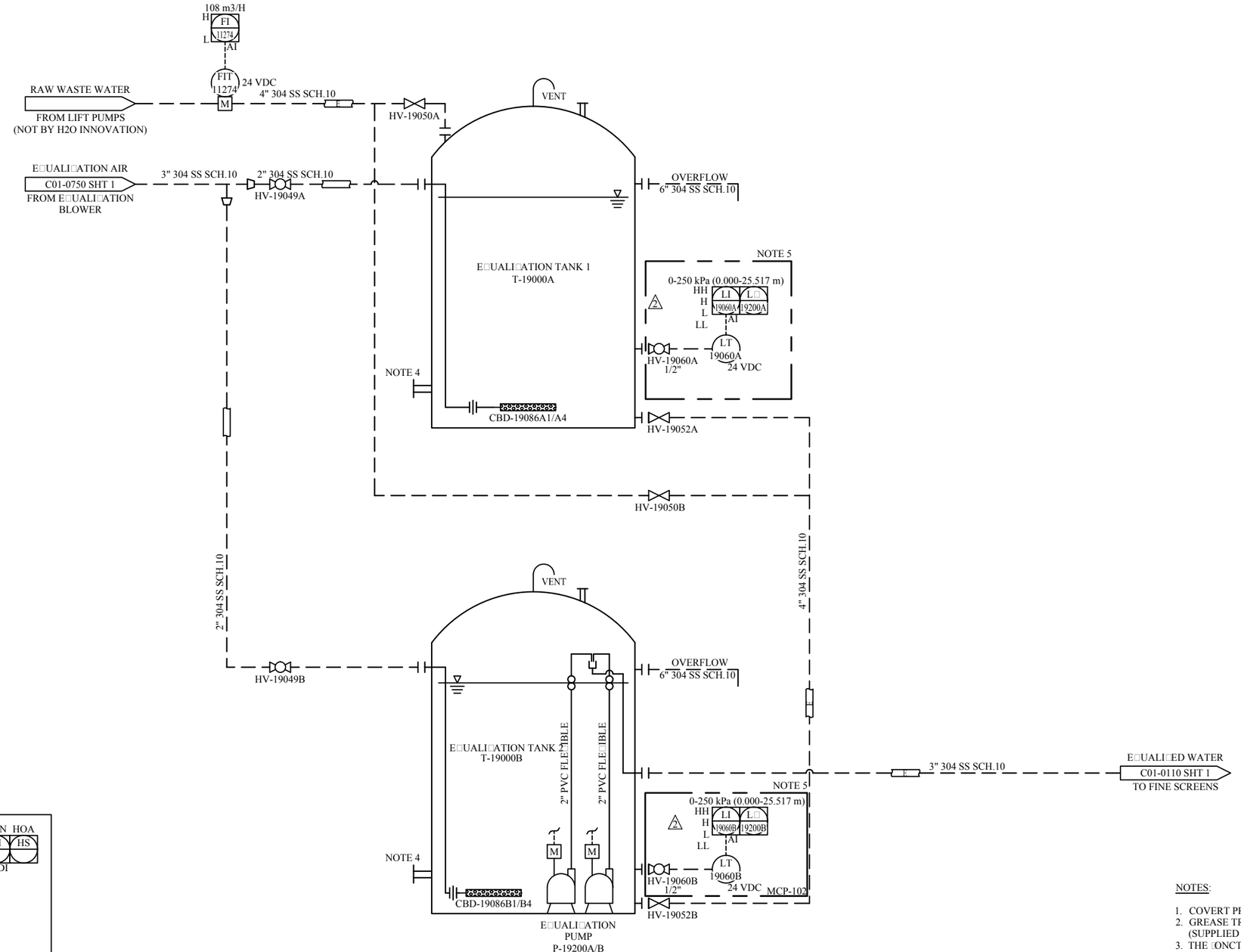

NOTES:

1. COVERT PROVIDE BUT NOT INSTALL.
2. GREASE TRAP TO BE INSTALLED UPSTREAM OF STP (SUPPLIED BY H2O INNOVATION, INSTALLED BY OTHERS)
3. THE FONCTION BOX IS HOOK ON THE EQUALIZATION TANK.
4. DOOR HATCH ACCESS.
5. PROTECTION COVER.
6. ALL COMPONANTS GOING INTO THE MCP-102

NOTE:
THE INFORMATION, SPECIFICATIONS AND DATA SHOWN ON THIS PRINT ARE FURNISHED BY AND ARE TO REMAIN THE PROPERTY OF H_2O INNOVATION.

THE PURPOSE OF THIS DOCUMENT IS TO FACILITATE THE INSTALLATION, MAINTENANCE AND OPERATION OF THE EQUIPMENT REPRESENTED BY SAID PRINT. NO OTHER USE OF THIS DOCUMENT SHALL BE MADE WITHOUT EXPRESS WRITTEN CONSENT FROM H_2O INNOVATION.

DRAWING REVISION

REV	DATE (DD/MM/YYYY)	REVISION DESCRIPTION	DRAWN	CHKD	ENG	APPVD
04	02/08/2016	REVISED AS PER COMMENT	M.P.	H.S.	H.C.	H.C.
03	25/07/2016	REVISED AS PER COMMENT	M.P.	H.S.	H.C.	H.C.
02	13/07/2016	REVISED AS PER COMMENT	M.P.	H.S.	H.C.	H.C.
01	11/07/2016	CHANGE SUMP TANK BALL TO GATE VALVE,SOLENOID TO ELECTRIC VALVE,TURBIDITY METER TO 120V	M.P.	H.S.	H.C.	H.C.
00	21/06/2016	PRELIMINARY	M.P.	H.S.	H.C.	H.C.

h2o innovation
knowledge to share.du savoir à partager

UNLESS NOTED OTHERWISE
INTERPRETATION ANSI Y14.5
TOLERANCES
FRACTIONS: ±1/64"
DECIMALS 0.X: ±0.030
0.XX: ±0.015
ANGLES: ±0.5°
HOLE SIZES: +1/64" -0"
HOLE CENTERS: ±1/64"
DO NOT SCALE PRINTS

MELIADINE STP

216 M3/DAY

TITLE:
FEED WATER EQUALIZATION
PROCESS & INSTRUMENTATION DIAGRAM

SCALE:	DRAWING NUMBER:	REVISION
N/A	U65875-C01-0190 SHEET: 1 OF 1	04

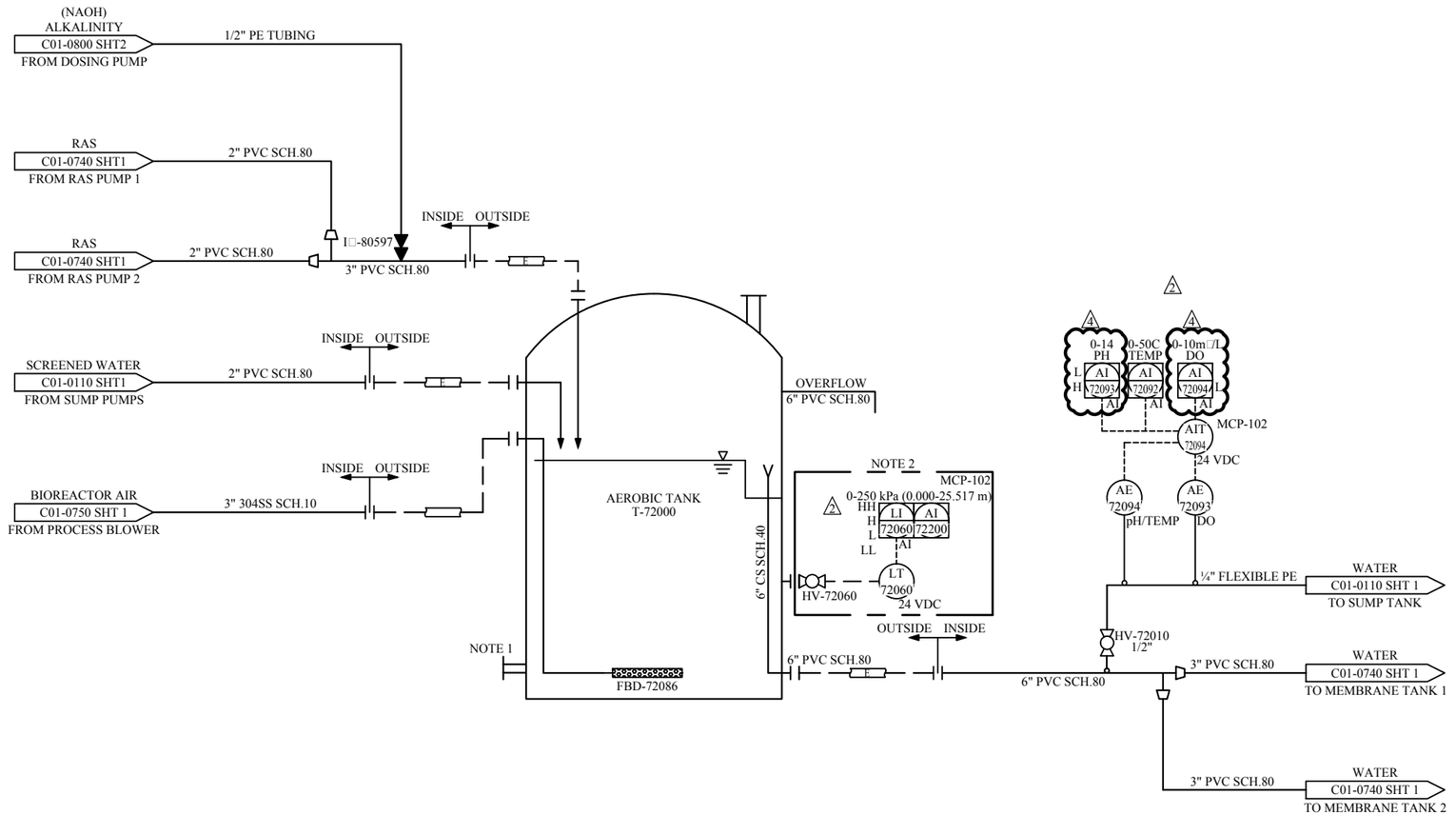

NOTES:

1. DOOR HATCH ACCESS.
2. PROTECTION COVER.

NOTE:
THE INFORMATION, SPECIFICATIONS AND DATA SHOWN ON THIS PRINT ARE FURNISHED BY AND ARE TO REMAIN THE PROPERTY OF H_2O INNOVATION.

THE PURPOSE OF THIS DOCUMENT IS TO FACILITATE THE INSTALLATION, MAINTENANCE AND OPERATION OF THE EQUIPMENT REPRESENTED BY SAID PRINT. NO OTHER USE OF THIS DOCUMENT SHALL BE MADE WITHOUT EXPRESS WRITTEN CONSENT FROM H_2O INNOVATION.

DRAWING REVISION

REV	DATE (DD/MM/YYYY)	REVISION DESCRIPTION	DRAWN	CHKD	ENG	APPVD
04	02/08/2016	REVISED AS PER COMMENT	M.P.	H.S.	H.C.	H.C.
03	25/07/2016	REVISED AS PER COMMENT	M.P.	H.S.	H.C.	H.C.
02	13/07/2016	REVISED AS PER COMMENT	M.P.	H.S.	H.C.	H.C.
01	11/07/2016	CHANGE SUMP TANK BALL TO GATE VALVE,SOLENOID TO ELECTRIC VALVE,TURBIDITY METER TO 120V	M.P.	H.S.	H.C.	H.C.
00	21/06/2016	PRELIMINARY	M.P.	H.S.	H.C.	H.C.

h2o innovation
knowledge to share.du savoir à partager

UNLESS NOTED OTHERWISE
INTERPRETATION: ANSI Y14.5
TOLERANCES
FRACTIONS: ±1/64"
DECIMALS: 0.X: ±0.030
0.XX: ±0.015
ANGLES: ±0.5°
HOLE SIZES: ±1/64"
HOLE CENTERS: ±1/32"
DO NOT SCALE PRINTS

MELIADINE STP

216 M3/DAY

TITLE:
AEROBIC TANK
PROCESS & INSTRUMENTATION DIAGRAM

SCALE:	DRAWING NUMBER:	REVISION
N/A	U65875-C01-0720	04
	SHEET: 1 □1	

HYPOCHLORITE
C01-0800 SHT 1
FROM DOSING PUMP

FV-83798-T

1/2" PE TUBING

CITRIC ACID
C01-0800 SHT 1
FROM DOSING PUMP

FV-83598-T

1/2" PE TUBING

NOTE 3

-100 □ 100 kPa

PI 79045-T AI

DP 79045-T TMP

HH H L LL

FV-31026-T 1" 120V

PT 79045-T 24VDC

2" PVC SCH.80

1□-83597-T

1□-83797-T

0-15 m3/Hr

FI F□ 79074-T 79000-T

L AI

FIT 79074-T 24 VDC

0-100 kPa

PG 79054-T

FV-79099-T

1½" PVC SCH.80

1½" HOSE

COMMISSIONING WATER

RECYCLE

3 4

FAULT □IW 91000 DI

START YC 91000 DO

UV INTENSITY 0-160 mW/□m2

IE 91000 AI

FV-79001-T

2" PVC SCH.80

PERMEATE/CIP PUMP P-79000-T

CV-79051-T

0-100 kPa (0.00-10.207 m)

HH H L LL

LI L□ 74060-T 79000-T AI

LT 74060-T 24 VDC

2" PVC FLE□IBLE VACUUM HOSE

VENT NOTE 6

FV-79098-T

HV-79201-T

UV CONTROLLER 120VAC, 1PH,60Hz

2" PVC SCH.80

PERMEATE

C01-0790 SHT 1

TO PERMEATE TANK

UV-91000-T

HV-79052-T

FV-79002-T

2" PVC SCH.80

CIP WATER

C01-0790 SHT 1

FROM PERMEATE TANK

HV-74023-T

CV-74028-T

MEMBRANE AIR SCOUR

C01-0750 SHT 2

FROM MEMBRANE BLOWER

3" 304LSS SCH.10

PRETREATED WATER

C01-0720 SHT 1

FROM AEROBIC TANK

3" PVC SCH.80

FV-74050-T

4" PVC SCH.80

F-74000-T

MEMBRANE TANK

T-74000-T

NOTE 5

HV-74051-T

RAS/WAS PUMP

P-74600-T

CV-74651-T

0-100 kPa

PG 74654-T

HV-74629-T 1"

0-25 m3/Hr

FI F□ 74674-T 74600-T

L AI

FIT 74674-T 24 VDC

2" PVC SCH.80

2 3

LEH 74068 DI HH

LE 74068 120 V

NOTE 8

HV-74652-T

2" PVC SCH.80

RAS

C01-0720 SHT 1

TO AEROBIC TANK

FV-96001-T

2" PVC SCH.80

WAS

C01-0960 SHT 1

TO SLUDGE TANK

SIGNAL

FROM PROCESS VARIABLE

PID SPD START FLT RUN HOA

PIC SI YC YA YI HS

AO AI DO DI DI

SC

M 600 VAC, 3 PH, 60 Hz

TYPICAL PUMP MOTOR (WITH VFD)

START FLT RUN HOA

YC YA YI HS

DO DI DI

M 600 VAC, 3PH, 60H□

TYPICAL RAS / WAS PUMP MOTOR

HOA

VHSC VHSO

DO DO

M 120 VAC, 1 PH, 60 Hz

TYPICAL ELECTRIC VALVE

HOA

HS

DO

FY

24 VDC

S

TYPICAL SOLENOID VALVE

NOTES:

1. DRAWING TYPICAL FOR A SINGLE TRAIN. A TOTAL OF 2 TRAINS ARE PROVIDED.
2. TAG NUMBERS OF E□UIPMENT ON EACH TRAIN TO SUBSTITUTE TRAIN NUMBER FOR T□
3. HEIGHT OF 4.6 FT RE□UIRED ABOVE MEMBRANE TANK LI□UID.
4. ALL COMPONANTS GOING INTO MCP-102.
5. MBR TANK WITH COVER.
6. ALL VENT TO OUTSIDE
7. E□UIPMENT TO BE PLACED IN CONTAINER □2.
8. WATER LEAK DETECTOR.

NOTE:
THE INFORMATION, SPECIFICATIONS AND DATA SHOWN ON THIS PRINT ARE FURNISHED BY AND ARE TO REMAIN THE PROPERTY OF H_2O INNOVATION.

THE PURPOSE OF THIS DOCUMENT IS TO FACILITATE THE INSTALLATION, MAINTENANCE AND OPERATION OF THE EQUIPMENT REPRESENTED BY SAID PRINT. NO OTHER USE OF THIS DOCUMENT SHALL BE MADE WITHOUT EXPRESS WRITTEN CONSENT FROM H_2O INNOVATION.

DRAWING REVISION

REV	DATE (DD/MM/YYYY)	REVISION DESCRIPTION	DRAWN	CHKD	ENG	APPVD
04	02/08/2016	REVISED AS PER COMMENT	M.P.	H.S.	H.C.	H.C.
03	25/07/2016	REVISED AS PER COMMENT	M.P.	H.S.	H.C.	H.C.
02	13/07/2016	REVISED AS PER COMMENT	M.P.	H.S.	H.C.	H.C.
01	11/07/2016	CHANGE SUMP TANK BALL TO GATE VALVE,SOLENOID TO ELECTRIC VALVE,TURBIDITY METER TO 120V	M.P.	H.S.	H.C.	H.C.
00	21/06/2016	PRELIMINARY	M.P.	H.S.	H.C.	H.C.

h2o innovation
knowledge to share.du savoir à partager

UNLESS NOTED OTHERWISE
INTERPRETATION: ANSI Y14.5
TOLERANCES
FRACTIONS: ±1/64"
DECIMALS 0.X: ±0.030
0.XX: ±0.015
ANGLES: ±0.5°
HOLE SIZES: +1/64" -0"
HOLE CENTERS: ±1/64"
DO NOT SCALE PRINTS

MELIADINE STP

216 M3/DAY

TITLE:
MEMBRANE FILTRATION
PROCESS & INSTRUMENTATION DIAGRAM

SCALE: N/A

DRAWING NUMBER: U65875-C01-0740 SHEET: 1 □1

REVISION 04

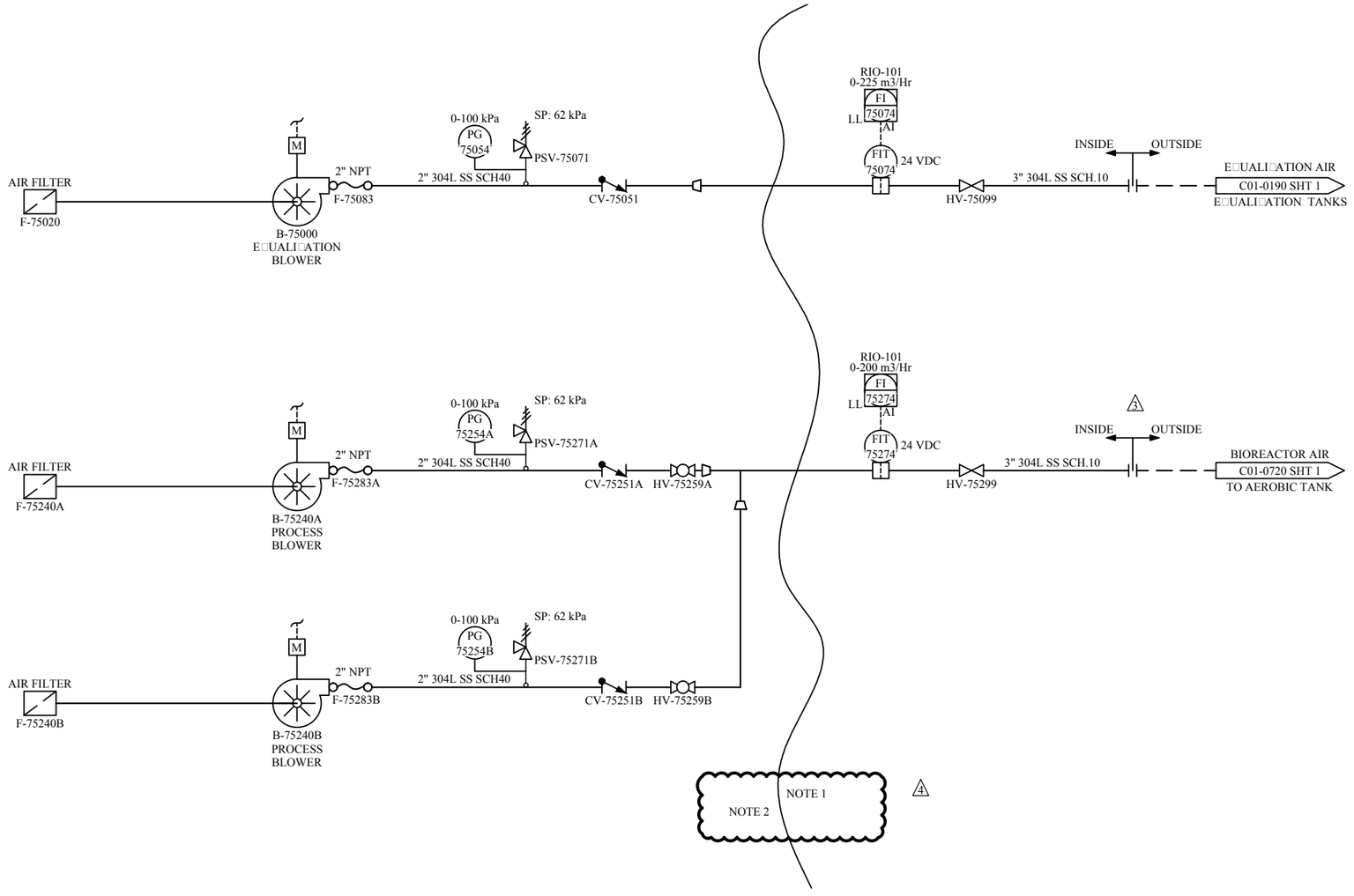

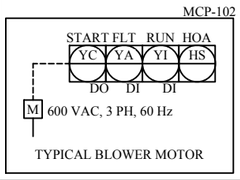

4

NOTES:

1. EQUIPMENT TO BE PLACED IN CONTAINER □1.
2. EQUIPMENT TO BE PLACED IN CONTAINER □2.

NOTE:
THE INFORMATION, SPECIFICATIONS AND DATA SHOWN ON THIS PRINT ARE FURNISHED BY AND ARE TO REMAIN THE PROPERTY OF H_2O INNOVATION.

THE PURPOSE OF THIS DOCUMENT IS TO FACILITATE THE INSTALLATION, MAINTENANCE AND OPERATION OF THE EQUIPMENT REPRESENTED BY SAID PRINT. NO OTHER USE OF THIS DOCUMENT SHALL BE MADE WITHOUT EXPRESS WRITTEN CONSENT FROM H_2O INNOVATION.

DRAWING REVISION

REV	DATE (DD/MM/YYYY)	REVISION DESCRIPTION	DRAWN	CHKD	ENG	APPVD
04	02/08/2016	REVISED AS PER COMMENT	M.P.	H.S.	H.C.	H.C.
03	25/07/2016	REVISED AS PER COMMENT	M.P.	H.S.	H.C.	H.C.
02	13/07/2016	REVISED AS PER COMMENT	M.P.	H.S.	H.C.	H.C.
01	11/07/2016	CHANGE SUMP TANK BALL TO GATE VALVE,SOLENOID TO ELECTRIC VALVE,TURBIDITY METER TO 120V	M.P.	H.S.	H.C.	H.C.
00	21/06/2016	PRELIMINARY	M.P.	H.S.	H.C.	H.C.

h2o innovation
knowledge to share.du savoir à partager

UNLESS NOTED OTHERWISE
INTERPRETATION: ANSI Y14.5
TOLERANCES
FRACTIONS: ±1/64"
DECIMALS 0.X: ±0.030
0.XX: ±0.015
ANGLES: ±0.5°
HOLE SIZES: ±1/64"
HOLE CENTERS: ±1/64"
DO NOT SCALE PRINTS

MELIADINE STP

216 M3/DAY

TITLE:
BLOWERS FOR MBR SYSTEM
PROCESS & INSTRUMENTATION DIAGRAM

SCALE:	DRAWING NUMBER:	REVISION
N/A	U65875-C01-0750	04
	SHEET: 1 □2	

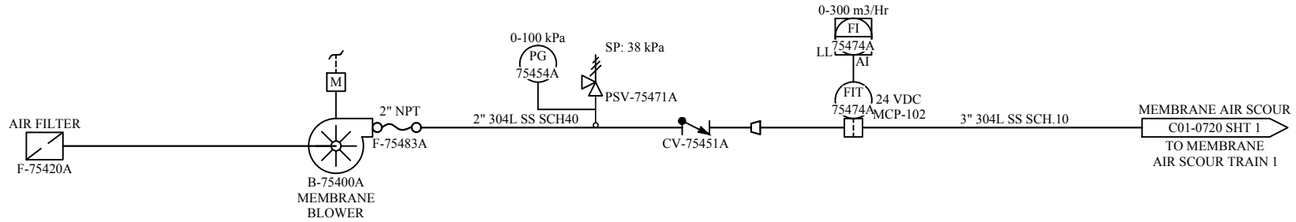

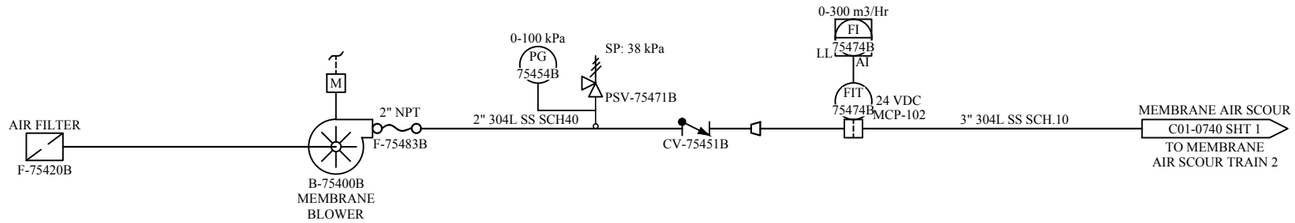

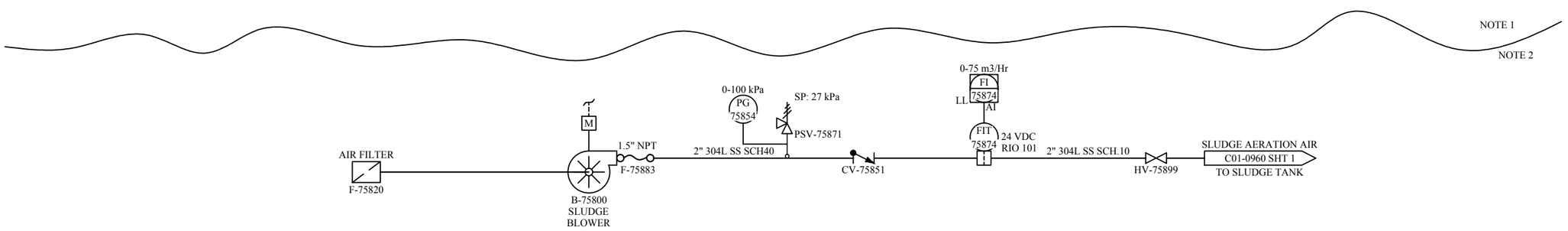

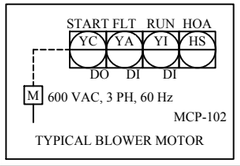

NOTES:

1. EQUIPMENT TO BE PLACED IN CONTAINER 2.
2. EQUIPMENT TO BE PLACED IN CONTAINER 1.

NOTE:
THE INFORMATION, SPECIFICATIONS AND DATA SHOWN ON THIS PRINT ARE FURNISHED BY AND ARE TO REMAIN THE PROPERTY OF H_2O INNOVATION.

THE PURPOSE OF THIS DOCUMENT IS TO FACILITATE THE INSTALLATION, MAINTENANCE AND OPERATION OF THE EQUIPMENT REPRESENTED BY SAID PRINT. NO OTHER USE OF THIS DOCUMENT SHALL BE MADE WITHOUT EXPRESS WRITTEN CONSENT FROM H_2O INNOVATION.

DRAWING REVISION

REV	DATE (DD/MM/YYYY)	REVISION DESCRIPTION	DRAWN	CHKD	ENG	APPVD
04	02/08/2016	REVISED AS PER COMMENT	M.P.	H.S.	H.C.	H.C.
03	25/07/2016	REVISED AS PER COMMENT	M.P.	H.S.	H.C.	H.C.
02	13/07/2016	REVISED AS PER COMMENT	M.P.	H.S.	H.C.	H.C.
01	11/07/2016	CHANGE SUMP TANK BALL TO GATE VALVE,SOLENOID TO ELECTRIC VALVE,TURBIDITY METER TO 120V	M.P.	H.S.	H.C.	H.C.
00	21/06/2016	PRELIMINARY	M.P.	H.S.	H.C.	H.C.

h2o innovation
knowledge to share.du savoir à partager

UNLESS NOTED OTHERWISE
INTERPRETATION: ANSI Y14.5
TOLERANCES
FRACTIONS: ±1/64"
DECIMALS 0.X: ±0.030
0.XX: ±0.015
ANGLES: ±0.5°
HOLE SIZES: +1/64" -0"
HOLE CENTERS: +1/64" -0"
DO NOT SCALE PRINTS

MELIADINE STP

216 M3/DAY

TITLE:
BLOWERS FOR MBR SYSTEM
PROCESS & INSTRUMENTATION DIAGRAM

SCALE:	DRAWING NUMBER:	REVISION
N/A	U65875-C01-0750	04
	SHEET: 2 □2	

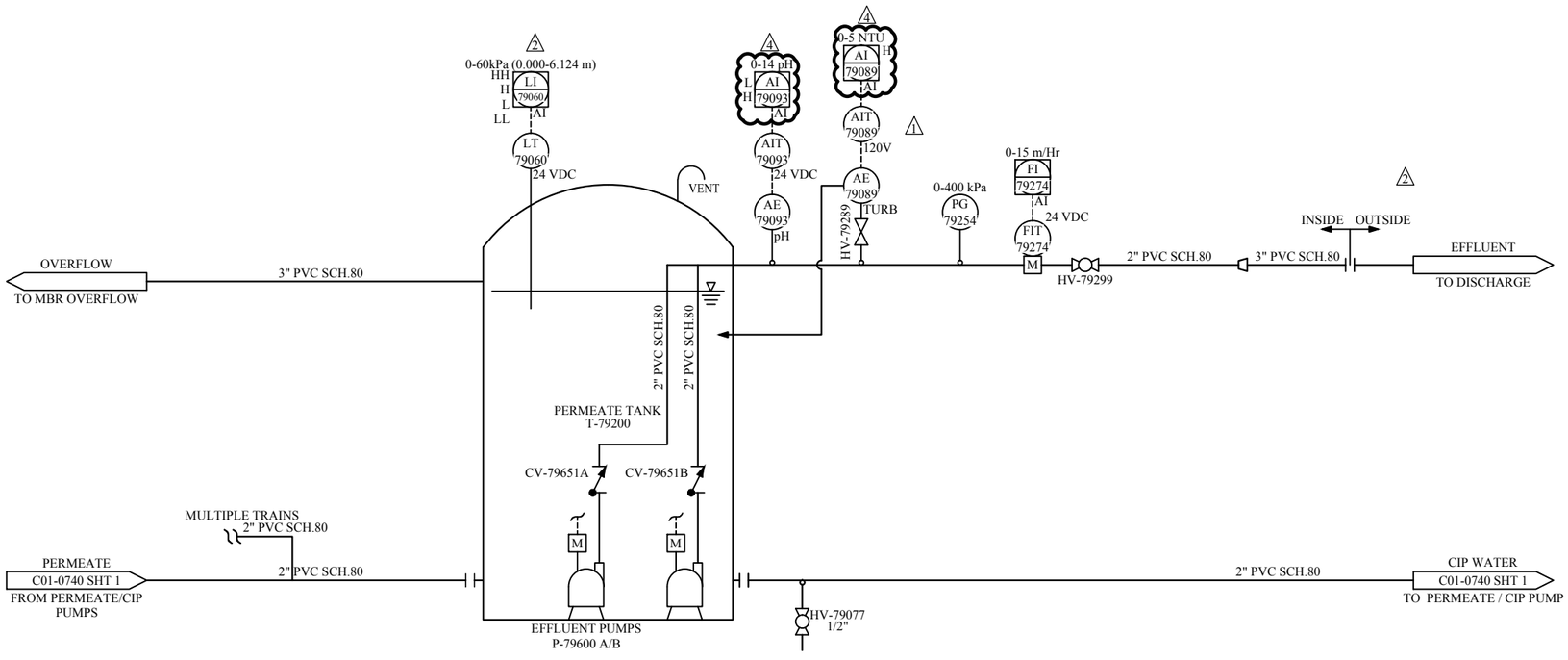

START FLT RUN HOA
YC YA YI HS
DO DI DI
M 600 VAC, 3 PH, 60 Hz
TYPICAL PUMP MOTOR

NOTES:

1. ALL COMPONANTS GOING INTO MCP-102.
2. E□UIPMENT TO BE PLACED IN CONTAINER □2.

NOTE:
THE INFORMATION, SPECIFICATIONS AND DATA SHOWN ON THIS PRINT ARE FURNISHED BY AND ARE TO REMAIN THE PROPERTY OF H_2O INNOVATION.

THE PURPOSE OF THIS DOCUMENT IS TO FACILITATE THE INSTALLATION, MAINTENANCE AND OPERATION OF THE EQUIPMENT REPRESENTED BY SAID PRINT. NO OTHER USE OF THIS DOCUMENT SHALL BE MADE WITHOUT EXPRESS WRITTEN CONSENT FROM H_2O INNOVATION.

DRAWING REVISION

REV	DATE (DD/MM/YYYY)	REVISION DESCRIPTION	DRAWN	CHKD	ENG	APPVD
04	02/08/2016	REVISED AS PER COMMENT	M.P.	H.S.	H.C.	H.C.
03	25/07/2016	REVISED AS PER COMMENT	M.P.	H.S.	H.C.	H.C.
02	13/07/2016	REVISED AS PER COMMENT	M.P.	H.S.	H.C.	H.C.
01	11/07/2016	CHANGE SUMP TANK BALL TO GATE VALVE,SOLENOID TO ELECTRIC VALVE,TURBIDITY METER TO 120V	M.P.	H.S.	H.C.	H.C.
00	21/06/2016	PRELIMINARY	M.P.	H.S.	H.C.	H.C.

h2o innovation
knowledge to share.du savoir à partager

UNLESS NOTED OTHERWISE
INTERPRETATION: ANSI Y14.5
TOLERANCES
FRACTIONS: ±1/64"
DECIMALS 0.X: ±0.030
0.XX: ±0.015
ANGLES: ±0.5°
HOLE SIZES: +/-0.2"
HOLE CENTERS: +/-0.1"
DO NOT SCALE PRINTS

MELIADINE STP

216 M3/DAY

TITLE:
PERMEATE TANK
PROCESS & INSTRUMENTATION DIAGRAM

SCALE:	DRAWING NUMBER:	REVISION
N/A	U65875-C01-0790	04
	SHEET: 1 □1	

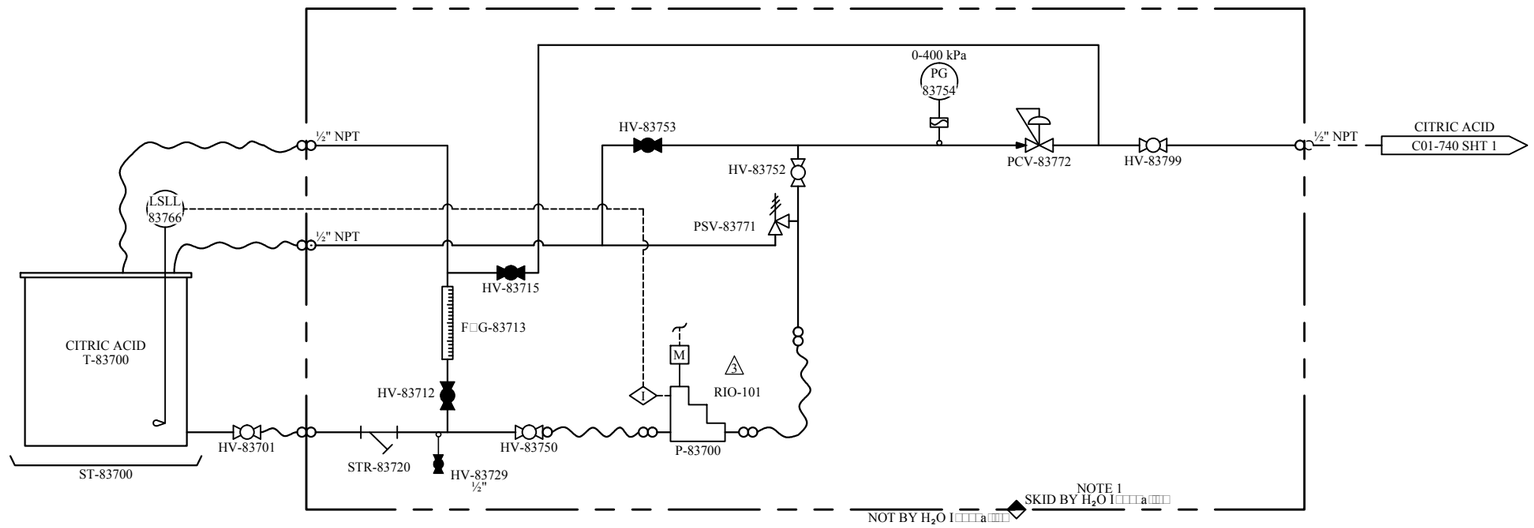

CITRIC ACID, 50 Ⓣ SOLUTION DOSING SYSTEM

3
NOTE 2
NOTE 1

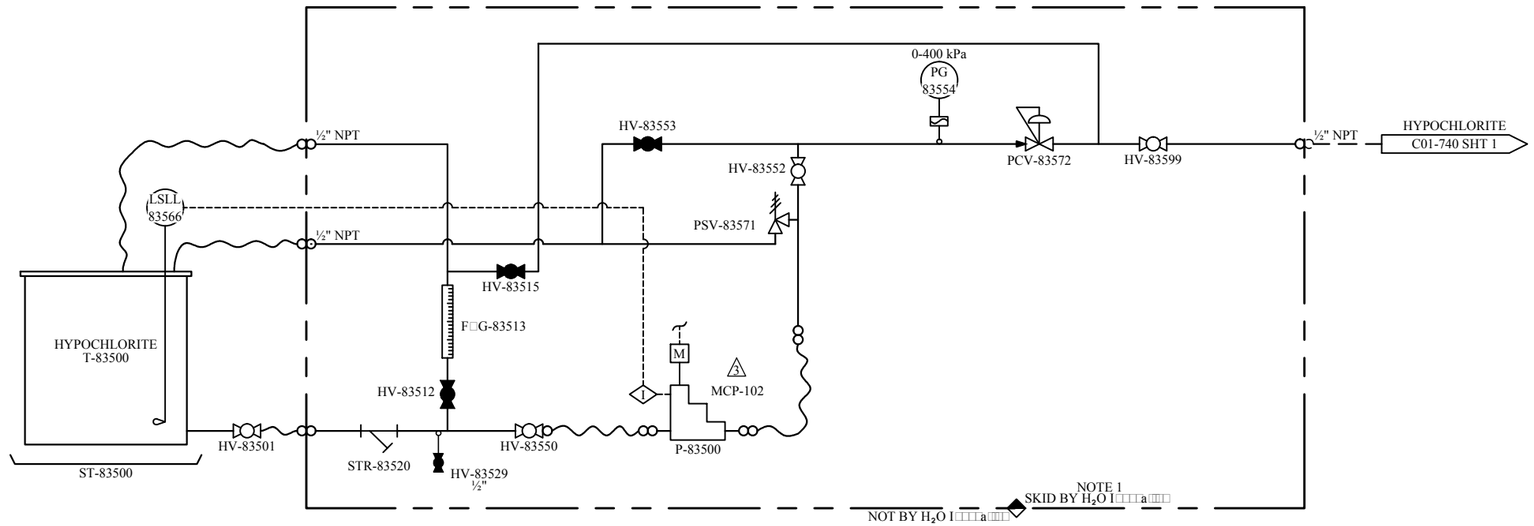

SODIUM HYPOCHLORITE, 10.3 Ⓣ DOSING SYSTEM

3
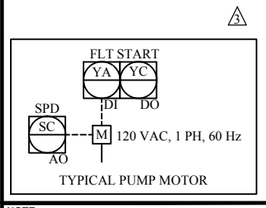

NOTES:

3 1. EⓉUIPMENT TO BE PLACED IN CONTAINER Ⓣ2.
2. EⓉUIPMENT TO BE PLACED IN CONTAINER Ⓣ1.

NOTE:
THE INFORMATION, SPECIFICATIONS AND DATA SHOWN ON THIS PRINT ARE FURNISHED BY AND ARE TO REMAIN THE PROPERTY OF H_2O INNOVATION.

THE PURPOSE OF THIS DOCUMENT IS TO FACILITATE THE INSTALLATION, MAINTENANCE AND OPERATION OF THE EQUIPMENT REPRESENTED BY SAID PRINT. NO OTHER USE OF THIS DOCUMENT SHALL BE MADE WITHOUT EXPRESS WRITTEN CONSENT FROM H_2O INNOVATION.

DRAWING REVISION

REV	DATE (DD/MM/YYYY)	REVISION DESCRIPTION	DRAWN	CHKD	ENG	APPVD
04	02/08/2016	REVISED AS PER COMMENT	M.P.	H.S.	H.C.	H.C.
03	25/07/2016	REVISED AS PER COMMENT	M.P.	H.S.	H.C.	H.C.
02	13/07/2016	REVISED AS PER COMMENT	M.P.	H.S.	H.C.	H.C.
01	11/07/2016	CHANGE SUMP TANK BALL TO GATE VALVE,SOLENOID TO ELECTRIC VALVE,TURBIDITY METER TO 120V	M.P.	H.S.	H.C.	H.C.
00	21/06/2016	PRELIMINARY	M.P.	H.S.	H.C.	H.C.

h2o innovation
knowledge to share ⧫ savoir à partager

UNLESS NOTED OTHERWISE
INTERPRETATION ANSI Y14.5
TOLERANCES
FRACTIONS: ±1/64"
DECIMALS 0.X: ±0.030
0.XX: ±0.015
ANGLES: ±0.5°
HOLE SIZES: +1/64" -0"
HOLE CENTERS: ±1/64"
DO NOT SCALE PRINTS

MELIADINE STP

216 M3/DAY

TITLE:
DOSING SKIDS - CLEANING CHEMICALS
PROCESS & INSTRUMENTATION DIAGRAM

SCALE: N/A
DRAWING NUMBER: U65875-C01-0800
SHEET: 1 Ⓣ2
REVISION 04

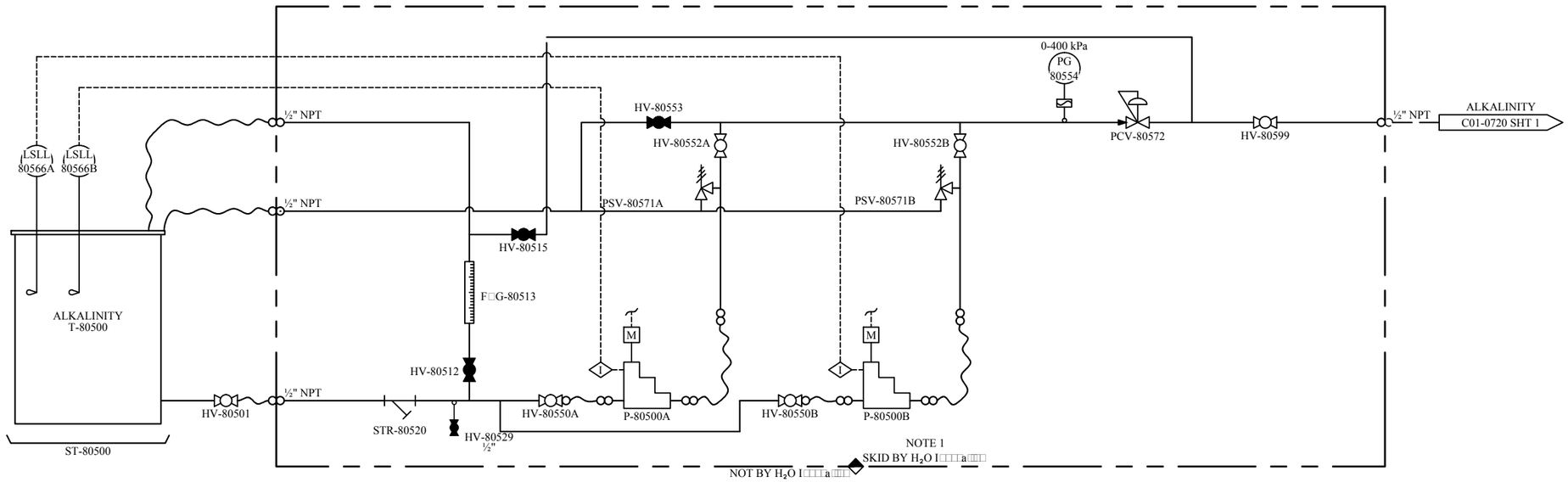

ALKALINITY AD□USTMENT CHEMICAL DOSING SYSTEM

△3
MCP-102

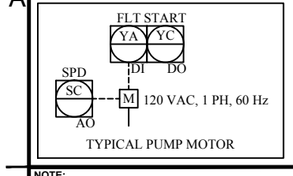

NOTES:

1. E□UIPMENT TO BE PLACED IN CONTAINER □2.

NOTE:
THE INFORMATION, SPECIFICATIONS AND DATA SHOWN ON THIS PRINT ARE FURNISHED BY AND ARE TO REMAIN THE PROPERTY OF H_2O INNOVATION.

THE PURPOSE OF THIS DOCUMENT IS TO FACILITATE THE INSTALLATION, MAINTENANCE AND OPERATION OF THE EQUIPMENT REPRESENTED BY SAID PRINT. NO OTHER USE OF THIS DOCUMENT SHALL BE MADE WITHOUT EXPRESS WRITTEN CONSENT FROM H_2O INNOVATION.

DRAWING REVISION

REV	DATE (DD/MM/YYYY)	REVISION DESCRIPTION	DRAWN	CHKD	ENG	APPVD
04	02/08/2016	REVISED AS PER COMMENT	M.P.	H.S.	H.C.	H.C.
03	25/07/2016	REVISED AS PER COMMENT	M.P.	H.S.	H.C.	H.C.
02	13/07/2016	REVISED AS PER COMMENT	M.P.	H.S.	H.C.	H.C.
01	11/07/2016	CHANGE SUMP TANK BALL TO GATE VALVE,SOLENOID TO ELECTRIC VALVE,TURBIDITY METER TO 120V	M.P.	H.S.	H.C.	H.C.
00	21/06/2016	PRELIMINARY	M.P.	H.S.	H.C.	H.C.

h2o innovation
knowledge to share.du savoir à partager

UNLESS NOTED OTHERWISE
INTERPRETATION: ANSI Y14.5
TOLERANCES
FRACTIONS: ±1/64"
DECIMALS 0.X: ±0.030
0.XX: ±0.015
ANGLES: ±0.5°
HOLE SIZES: +1/64" -0"
HOLE CENTERS: +1/64" -0"
DO NOT SCALE PRINTS

MELIADINE STP

216 M3/DAY

TITLE:
DOSING SKIDS - ALKALINITY
PROCESS & INSTRUMENTATION DIAGRAM

SCALE:	DRAWING NUMBER:	REVISION
N/A	U65875-C01-0800	04
	SHEET: 2 □2	

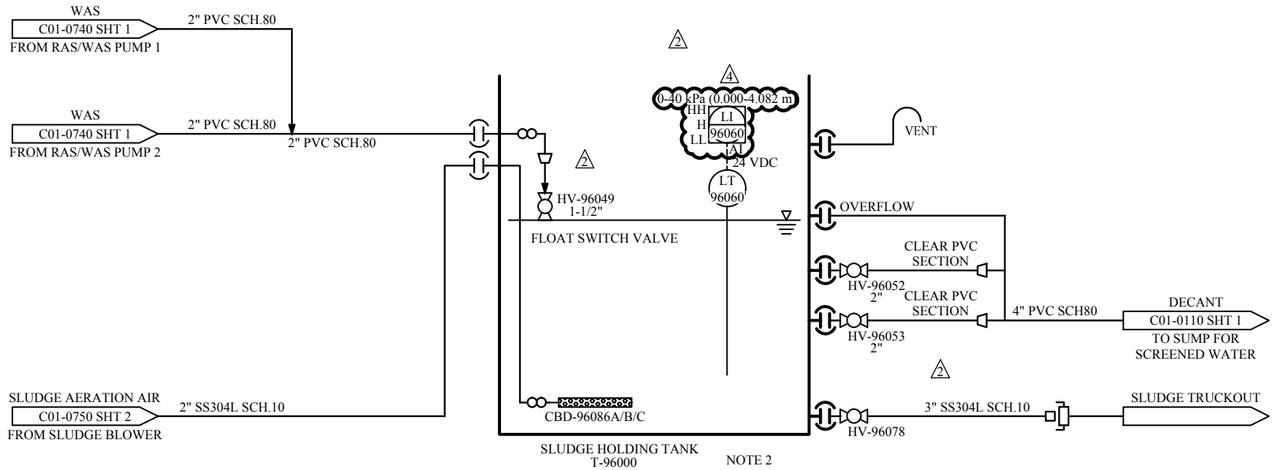

NOTES:

1. ALL COMPONANTS GOING INTO RIO 101.
2. SLUDGE HOLDING TANK WITH COVER.
3. ALL VENT TO OUTSIDE.

NOTE:
THE INFORMATION, SPECIFICATIONS AND DATA SHOWN ON THIS PRINT ARE FURNISHED BY AND ARE TO REMAIN THE PROPERTY OF H_2O INNOVATION.

THE PURPOSE OF THIS DOCUMENT IS TO FACILITATE THE INSTALLATION, MAINTENANCE AND OPERATION OF THE EQUIPMENT REPRESENTED BY SAID PRINT. NO OTHER USE OF THIS DOCUMENT SHALL BE MADE WITHOUT EXPRESS WRITTEN CONSENT FROM H_2O INNOVATION.

DRAWING REVISION

REV	DATE (dd/mm/yy)	REVISION DESCRIPTION	DRAWN	CHKD	ENG	APPVD
04	02/08/2016	REVISED AS PER COMMENT	M.P.	H.S.	H.C.	H.C.
03	25/07/2016	REVISED AS PER COMMENT	M.P.	H.S.	H.C.	H.C.
02	13/07/2016	REVISED AS PER COMMENT	M.P.	H.S.	H.C.	H.C.
01	11/07/2016	CHANGE SUMP TANK BALL TO GATE VALVE,SOLENOID TO ELECTRIC VALVE,TURBIDITY METER TO 120V	M.P.	H.S.	H.C.	H.C.
00	21/06/2016	PRELIMINARY	M.P.	H.S.	H.C.	H.C.

h2o innovation
knowledge to share.du savoir à partager

UNLESS NOTED OTHERWISE
INTERPRETATION: ANSI Y14.5
TOLERANCES
FRACTIONS: ±1/64"
DECIMALS 0.X: ±0.030
0.XX: ±0.015
ANGLES: ±0.5°
HOLE SIZES: ±1/64"
HOLE CENTERS: ±1/32"
DO NOT SCALE PRINTS

MELIADINE STP

216 M3/DAY

TITLE:
SLUDGE HANDLING SYSTEM
PROCESS & INSTRUMENTATION DIAGRAM

SCALE:	DRAWING NUMBER:	REVISION
N/A	U65875-C01-0960	04
	SHEET: 1 □1	

9.2 - PROCESS FLOW DIAGRAMS (PFD)

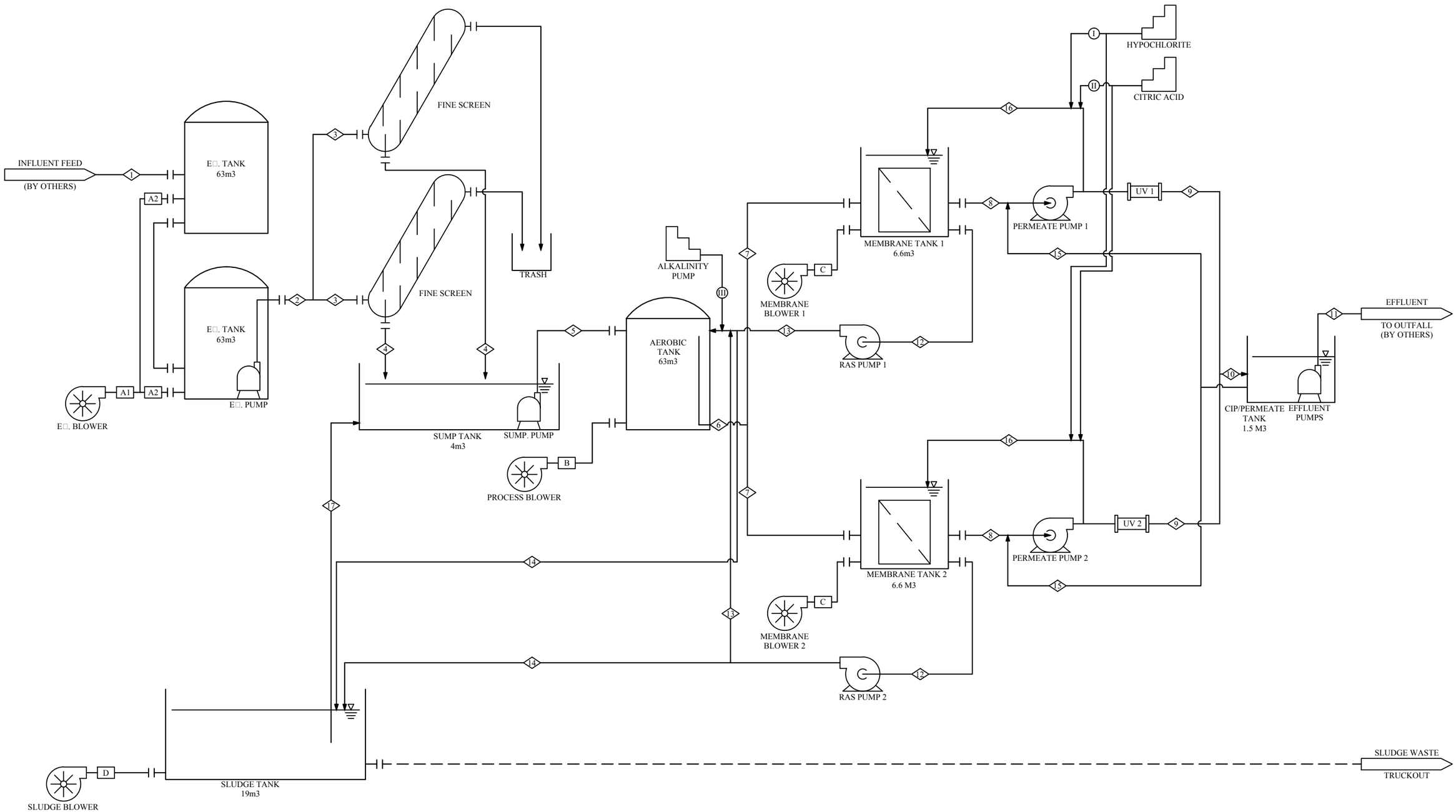

NOTE:
THE INFORMATION, SPECIFICATIONS AND DATA SHOWN ON THIS PRINT ARE FURNISHED BY AND ARE TO REMAIN THE PROPERTY OF H_2O INNOVATION.

THE PURPOSE OF THIS DOCUMENT IS TO FACILITATE THE INSTALLATION, MAINTENANCE AND OPERATION OF THE EQUIPMENT REPRESENTED BY SAID PRINT. NO OTHER USE OF THIS DOCUMENT SHALL BE MADE WITHOUT EXPRESS WRITTEN CONSENT FROM H_2O INNOVATION.

DRAWING REVISION

REV	DATE (DD/MM/YYYY)	REVISION DESCRIPTION	DRAWN	CHKD	ENG	APPVD
1	07/07/2016	REVISE AS PER COMMENT	M.P.	H.S.	H.C.	H.C.
0	30/06/2016	PRELIMINARY	M.P.	H.S.	H.C.	H.C.

h2O innovation
knowledge to share.du savoir à partager

UNLESS NOTED OTHERWISE
INTERPRETATION: ANSI Y14.5
TOLERANCES
FRACTIONS: ±1/64"
DECIMALS: 0.X: ±0.030
0.XX: ±0.015
ANGLES: ±0.5°
HOLE SIZES: ±1/64"
HOLE CENTERS: ±1/32"
DO NOT SCALE PRINTS

MELIADINE STP

216 M3/DAY

TITLE:
PROCESS FLOW DIAGRAM

SCALE:	DRAWING NUMBER:	REVISION
N/A	U65875-C11-0001	1
	SHEET: 1 □2	

Line Number	Description	Design Flow	Max Flow
1	Raw Feed	2549 m3/d	2549 m3/d
2	Equalized Feed	216 m3/d	216 m3/d
3	Equalized Feedwater to Screens	108 m3/d	216 m3/d
4	Screened Wastewater	108 m3/d	216 m3/d
5	Pumped Screened Flow from Sump	216 m3/d	216 m3/d
6	Common Aerated MLSS	1080 m3/d	1080 m3/d
7	Aerated MLSS	540 m3/d	540 m3/d
8	Permeate	108 m3/d	216 m3/d
9	UV Treated Effluent	108 m3/d	216 m3/d
10	Common UV Treated Effluent	216 m3/d	216 m3/d
11	Pumped Effluent	216 m3/d	216 m3/d
12	RAS from Membrane Tank	432 m3/d	432 m3/d
13	RAS from Membrane Tank to Process Tank	432 m3/d	432 m3/d
14	WAS from Membrane Tank	432 m3/d	432 m3/d
15	Effluent from CIP Tank for CIP	45 m3/d (over 30 min during CIP)	45 m3/d (over 30 min during CIP)
16	Pumped Effluent to Membrane Tank for CIP	45 m3/d (over 30 min during CIP)	45 m3/d (over 30 min during CIP)
17	Decanted Sludge Waste	approx 108 m3/d	approx 108 m3/d
⚠1 I	Hypochlorite (10.3%)	1.2 m3/d Note 2	1.2 m3/d Note 2
II	Citric Acid (50%)	1.2 m3/d Note 2	1.2 m3/d Note 2
III	NaOH (25%) Alkalinity	0.17 m3/d Note 3	0.17 m3/d Note 3
A1	Combined Equalization Tank Air Note 1	220 m3/hr	220 m3/hr
A2	Individual Equalization Tank Air Note 1	110 m3/hr	110 m3/hr
B	Process Blower Air Note 1	153 m3/hr	153 m3/hr
C	Membrane Air Scour Air Note 1	254 m3/hr	254 m3/hr
D	Sludge Tank Air Note 1	50 m3/hr	50 m3/hr

Note 1 10% variation in the stated flows is acceptable

⚠1

Note 2 Hypochlorite will dose 2.2 L + holdup volume over approximately 30 minutes during a CEB and 22L + holdup volume over approximately 30 minutes during a CIP; therefore, instantaneous flow is max 1.2 m3/d. Citric acid will dose over 22L + holdup volume over approximately 30 minutes during a CIP, i.e., instantaneous flow is max 1.2 m3/d. For hypochlorite, CEBs are conducted weekly (2.2 L x 48 cleans/year x 2 trains) and CIPs are quarterly (22 L x 4 cleans/year x 2 trains). For citric acid, CIPs are anticipated to be annual (22 L x 1 clean/year x 2 trains).

Note 3 NaOH will dose continuously while flow is entering the plant to regulate alkalinity and pH levels

NOTE:
THE INFORMATION, SPECIFICATIONS AND DATA SHOWN ON THIS PRINT ARE FURNISHED BY AND ARE TO REMAIN THE PROPERTY OF H_2O INNOVATION.

THE PURPOSE OF THIS DOCUMENT IS TO FACILITATE THE INSTALLATION, MAINTENANCE AND OPERATION OF THE EQUIPMENT REPRESENTED BY SAID PRINT. NO OTHER USE OF THIS DOCUMENT SHALL BE MADE WITHOUT EXPRESS WRITTEN CONSENT FROM H_2O INNOVATION.

DRAWING REVISION

REV	DATE (DD/MM/YYYY)	REVISION DESCRIPTION	DRAWN	CHKD	ENG	APPVD
1	07/07/2016	REVISE AS PER COMMENT	M.P.	H.S.	H.C.	H.C.
0	30/06/2016	PRELIMINARY	M.P.	H.S.	H.C.	H.C.

h2o innovation
knowledge to share.du savoir à partager

UNLESS NOTED OTHERWISE
INTERPRETATION: ANSI Y14.5
TOLERANCES
FRACTIONS: ±1/64"
DECIMALS 0.X: ±0.030
0.XX: ±0.015
ANGLES: ±0.5°
HOLE SIZES: ±1/64"
HOLE CENTERS: ±1/64"
DO NOT SCALE PRINTS

MELIADINE STP

216 M3/DAY

TITLE:
PROCESS FLOW DIAGRAM

SCALE:	DRAWING NUMBER:	REVISION
N/A	U65875-C11-0001	1
	SHEET: 2 □2	

9.3 - GENERAL ARRANGEMENT DRAWINGS

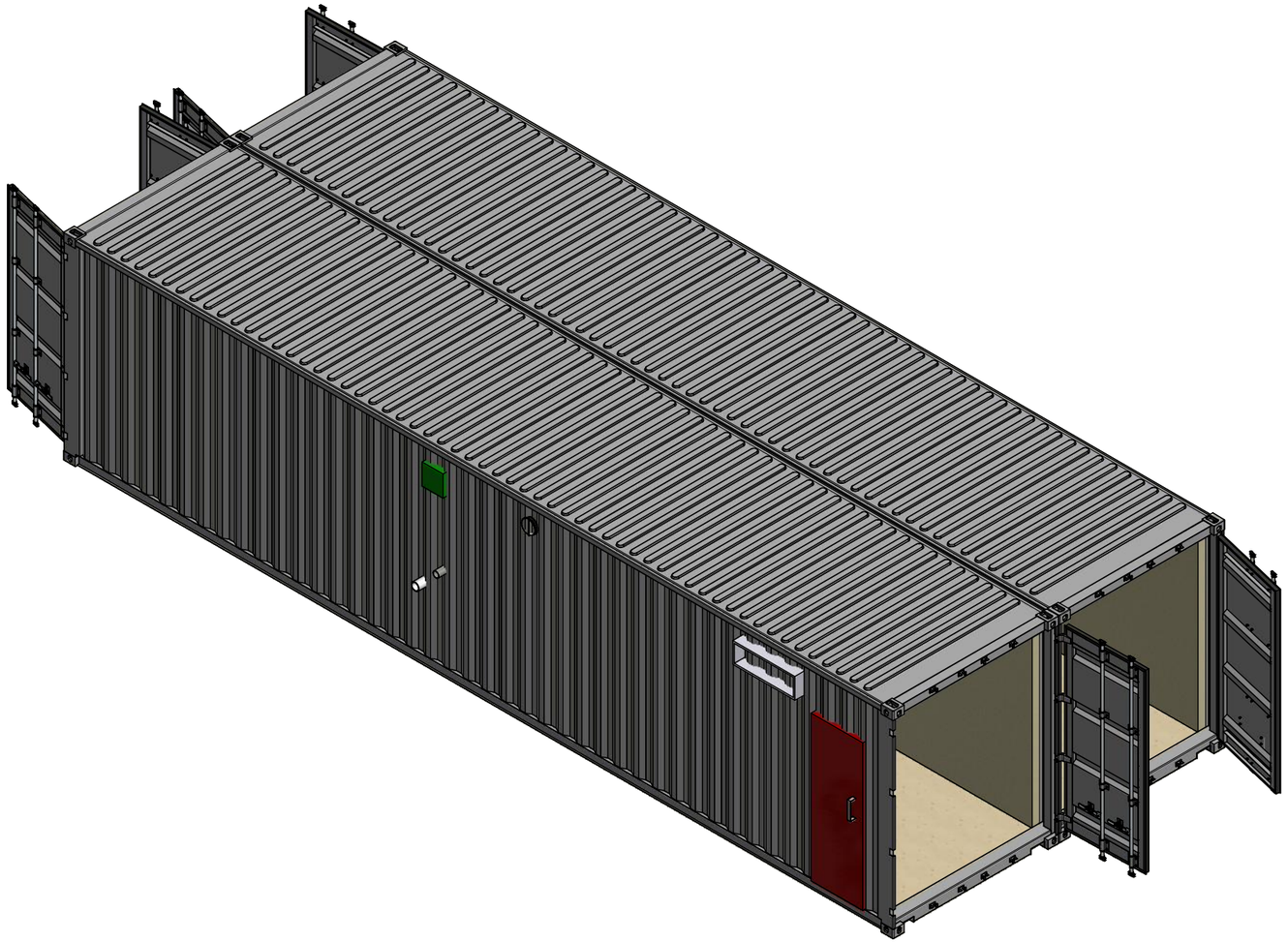

ISO VIEW

NOTES:

1. REFERENCE P&ID #U65875-C01-0001.
2. BOLTS AND NUTS ARE STAINLESS STEEL TYPE 316. WASHERS AND LOCK WASHERS ARE STAINLESS STEEL TYPE 316 PER ASTM F436 AND F844. MECHANICAL PROPERTIES PER CONDITION CW OF ASTM F593. DIMENSION PER ASME B18.2.1. THREADS PER ANSI B1.1 CLASS 2A.
3. STRUCTURAL STEEL WELDING AS PER CODE OF STANDARD PRACTICE, CSA W47.1 AND CSA W59.
4. NO VERTICAL DOWN WELDS ARE ALLOWED UNLESS CERTIFIED PER CSA W59 AND APPROVED BY H_2O INNOVATION.
5. STITCH WELDS ARE NOT ALLOWED UNLESS APPROVED BY H_2O INNOVATION.
6. HOLLOW STRUCTURAL STEEL SECTIONS PER ASTM A500, GRADE B.
7. STRUCTURAL CHANNEL, ANGLES, AND PLATE PER ASTM A36.
8. SAND BLAST FRAME TO SSPC-SP10 FINISH, ACCEPTABLE FOR POWDER COAT OR PAINTING.
9. APPLY ONE (1) COAT, WITH MINIMUM DRY FILM THICKNESS (DFT) PER COAT OF 4 TO 7 MILS, OF POLYAMIDE EPOXY PRIMER. PITT-GUARD 95-245 SERIES FROM PPF OR APPROVED EQUAL.
10. APPLY TWO (2) COATS, WITH MINIMUM DRY FILM THICKNESS (DFT) PER COAT OF 2 TO 3 MILS, OF ACRYLIC ALIPHATIC URETHANE PAINT. PITTHANE ULTRA 95-812 SERIES (TINTED TO MATCH RAL5010) FROM PPG OR APPROVED EQUAL. TO ACHIEVE FINAL 8 TO 13 MILS TOTAL DRY FILM THICKNESS.
11. ALL STAINLESS STEEL TO BE WELDED TO ASME B31.1, 100 PERCENT PENETRATION AND BACK GASSED WITH ARGON.
12. FINISHED FABRICATION OF STAINLESS STEEL SPOOLS MUST BE HYDROSTATICALLY TESTED TO 1.5 TIMES OPERATING PRESSURE. OPERATING PRESSURE SHALL BE XXX.
13. ALL PVC PIPE TO BE SCHEDULE 80, GRAY, U.N.O. PIPE MATERIAL TO CONFORM TO ASTM D1784. PHYSICAL DIMENSIONS, SCHEDULES, AND TOLERANCES TO CONFORM TO ASTM D1785.
14. ALL PVC FITTINGS TO BE SCHEDULE 80, GRAY. SOCKET FITTINGS TO CONFORM TO ASTM D2467.
15. PVC FLANGES 3" AND LARGER TO BE VAN STONE STYLE WITH GLASS FILLED PVC RING, U.N.O. PVC FLANGES 2-½" AND SMALLER TO BE VAN STONE STYLE WITH PVC RING, UNO PVC FLANGES TO MEET CLASS 150 BOLT HOLE PATTERN PER ANSI B16.5.
16. PVC PRIMER TO CONFORM TO ASTM F656. PVC SOLVENT CEMENT TO CONFORM TO ASTM D2564.
17. ALL GASKETS TO CONFORM TO ASTM F477.
18. FINISHED FABRICATION OF PVC/CPVC SPOOLS MUST BE HYDROSTATICALLY TESTED TO 50 PSI.
19. UNWITNESSED TEST REPORT MUST BE PROVIDED.
20. MATERIAL TEST REPORTS (MTR) TO BE PROVIDED FOR ALL MATERIAL.
21. APPROXIMATE SHIPPING WEIGHT: 225,537 LBS.

NOTE:
THE INFORMATION, SPECIFICATIONS AND DATA SHOWN ON THIS PRINT ARE FURNISHED BY AND ARE TO REMAIN THE PROPERTY OF H_2O INNOVATION.

THE PURPOSE OF THIS DOCUMENT IS TO FACILITATE THE INSTALLATION, MAINTENANCE AND OPERATION OF THE EQUIPMENT REPRESENTED BY SAID PRINT. NO OTHER USE OF THIS DOCUMENT SHALL BE MADE WITHOUT EXPRESS WRITTEN CONSENT FROM H_2O INNOVATION.

DRAWING REVISION

REV	DATE (DD/MM/YYYY)	REVISION DESCRIPTION	DRAWN	PEER	ENG	APPVD
00	23/06/2016	PRELIMINARY	DM	-	RD	MB

h2o innovation
knowledge to share du savoir à partager

UNLESS NOTED OTHERWISE
INTERPRETATION: ANSI Y14.5
TOLERANCES
FRACTIONS: ±1/64"
DECIMALS: 0.X: ±0.030
0.XX: ±0.015
ANGLES: ±0.5°
HOLE SIZES: ±1/64"
HOLE CENTERS: ±1/32"
DO NOT SCALE PRINTS

MELIADINE, NU

PROJECT NAME

TITLE:
WASTE WATER CONTAINER
GENERAL ARRANGEMENT

SCALE:	DRAWING NUMBER:	REVISION
N/A	U65875-B01-0001 SHEET: 1 OF 3	00

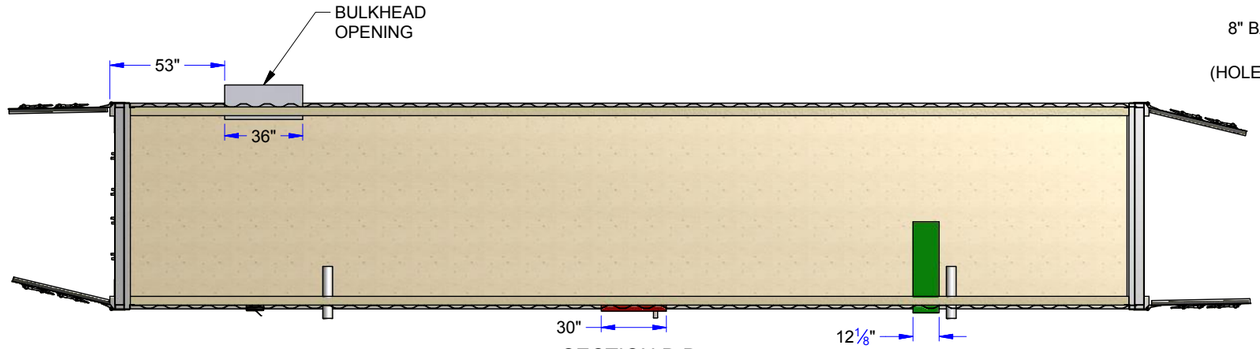

SECTION B-B

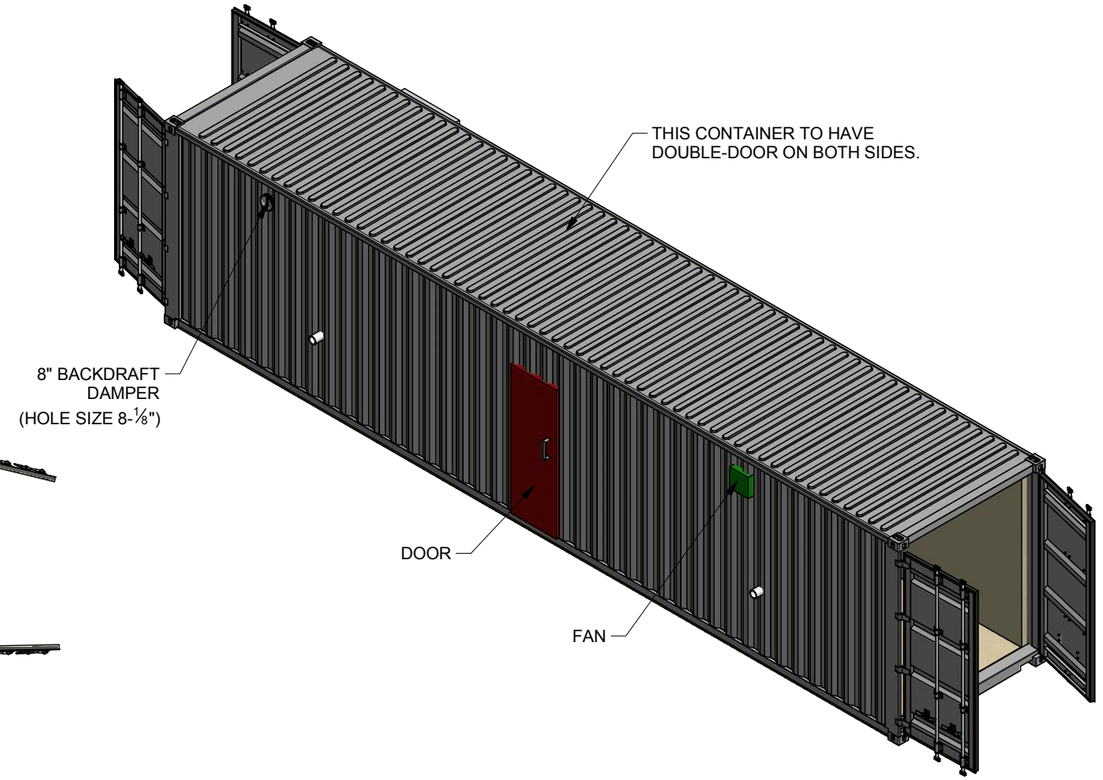

ISO VIEW
MEMBRANE TANK

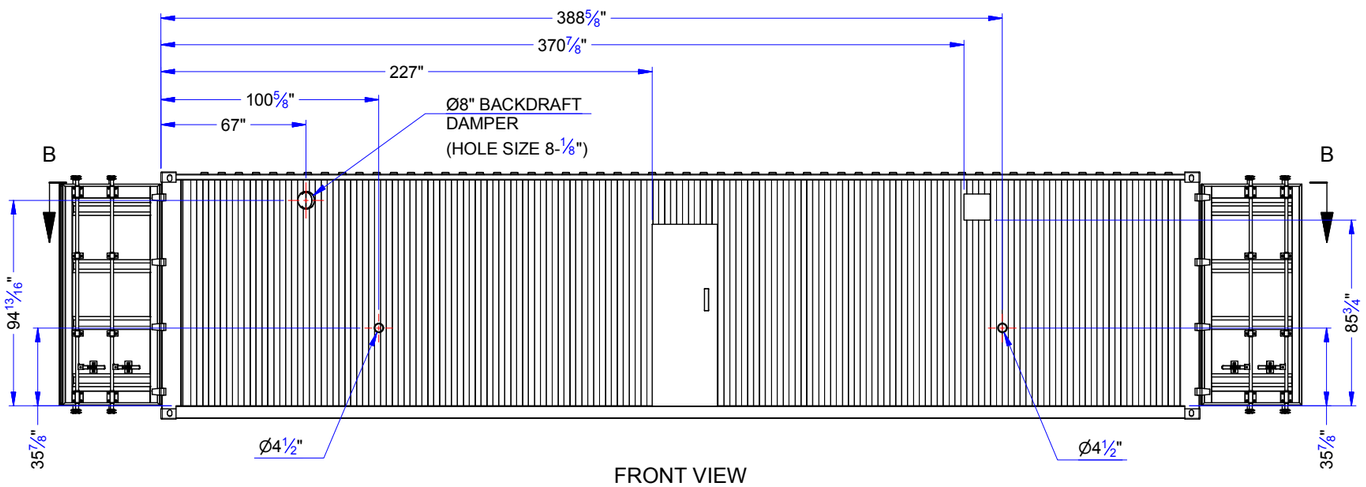

FRONT VIEW

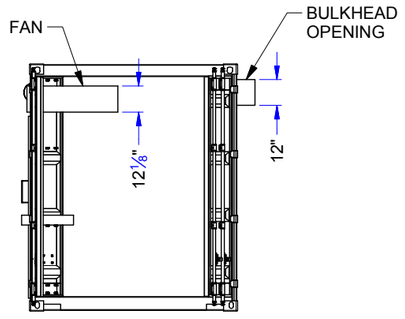

RIGHT VIEW

NOTE:
THE INFORMATION, SPECIFICATIONS AND DATA SHOWN ON THIS PRINT ARE FURNISHED BY AND ARE TO REMAIN THE PROPERTY OF H_2O INNOVATION.

THE PURPOSE OF THIS DOCUMENT IS TO FACILITATE THE INSTALLATION, MAINTENANCE AND OPERATION OF THE EQUIPMENT REPRESENTED BY SAID PRINT. NO OTHER USE OF THIS DOCUMENT SHALL BE MADE WITHOUT EXPRESS WRITTEN CONSENT FROM H_2O INNOVATION.

DRAWING REVISION

REV	DATE (DD/MM/YYYY)	REVISION DESCRIPTION	DRAWN	PEER	ENG	APPVD
00	23/06/2016	PRELIMINARY	DM	-	RD	MB

h2o innovation
knowledge to share/du savoir à partager

UNLESS NOTED OTHERWISE
INTERPRETATION: ANSI Y14.5
TOLERANCES
FRACTIONS: ±1/64"
DECIMALS 0.X: ±0.030
0.XX: ±0.015
ANGLES: ±0.5°
HOLE SIZES: ±1/64"
HOLE CENTERS: ±1/64"
DO NOT SCALE PRINTS

MELIADINE, NU

PROJECT NAME

TITLE:
WASTE WATER CONTAINER
GENERAL ARRANGEMENT

SCALE:	DRAWING NUMBER:	REVISION
N/A	U65875-B01-0001 SHEET: 2 OF 3	00

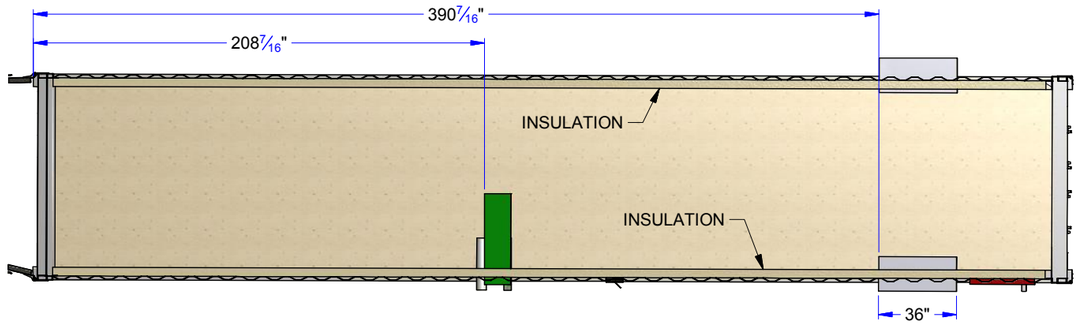

SECTION A-A

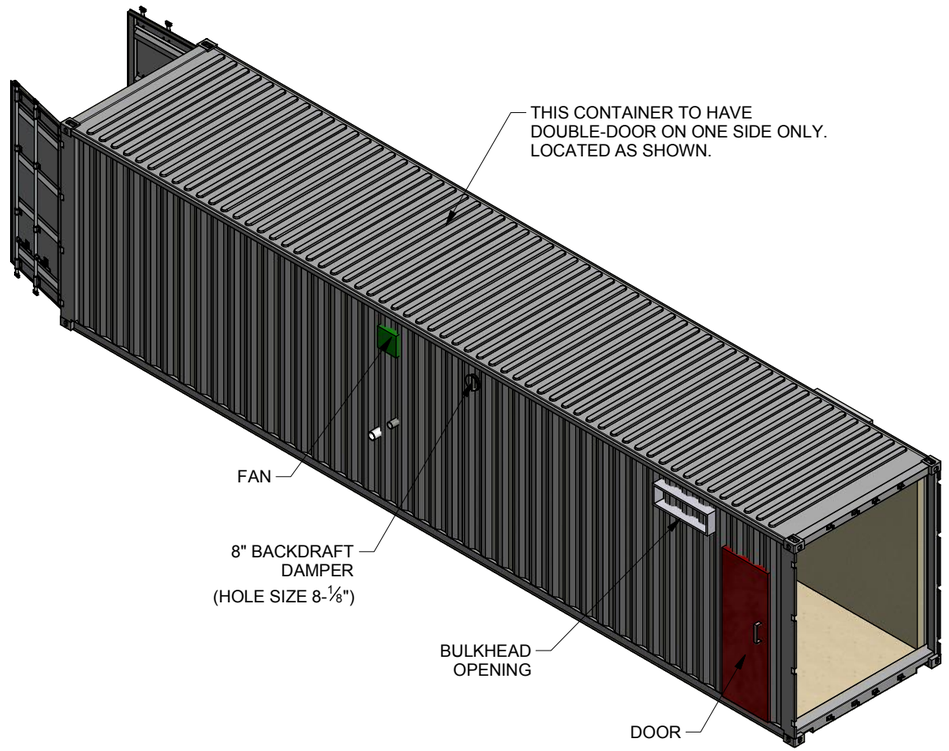

ISO VIEW
SLUDGE CONTAINER

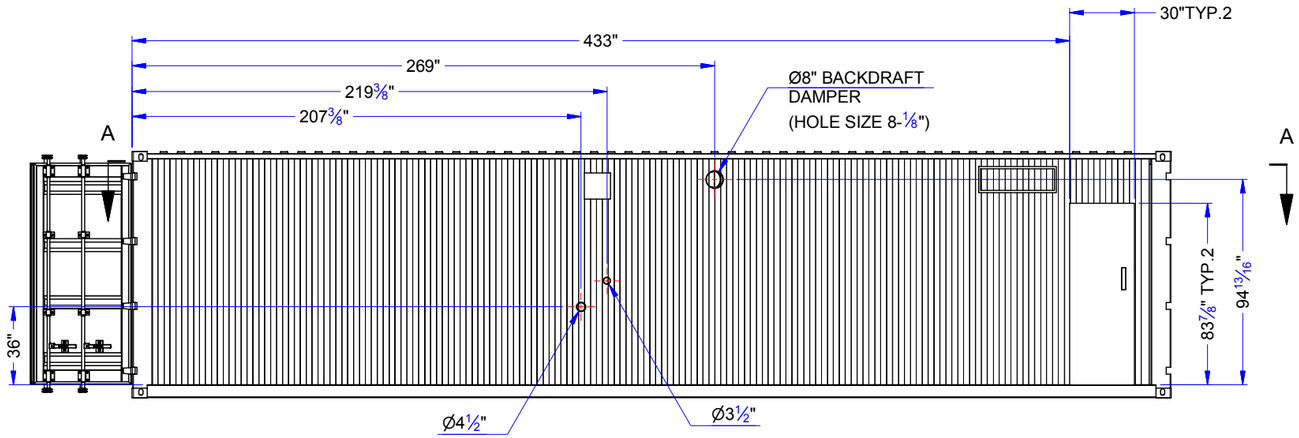

FRONT VIEW

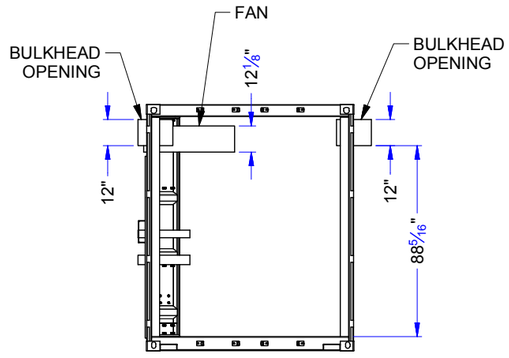

RIGHT VIEW

NOTE:
THE INFORMATION, SPECIFICATIONS AND DATA SHOWN ON THIS PRINT ARE FURNISHED BY AND ARE TO REMAIN THE PROPERTY OF H_2O INNOVATION.

THE PURPOSE OF THIS DOCUMENT IS TO FACILITATE THE INSTALLATION, MAINTENANCE AND OPERATION OF THE EQUIPMENT REPRESENTED BY SAID PRINT. NO OTHER USE OF THIS DOCUMENT SHALL BE MADE WITHOUT EXPRESS WRITTEN CONSENT FROM H_2O INNOVATION.

DRAWING REVISION

REV	DATE (DD/MM/YYYY)	REVISION DESCRIPTION	DRAWN	PEER	ENG	APPVD
00	23/06/2016	PRELIMINARY	DM	-	RD	MB

h2o innovation
knowledge to share.du savoir à partager

UNLESS NOTED OTHERWISE
INTERPRETATION: ANSI Y14.5
TOLERANCES:
FRACTIONS: ±1/64"
DECIMALS .0X: ±0.030
.0XX: ±0.015
ANGLES: ±0.5°
HOLE SIZES: ±1/64"
HOLE CENTERS: ±1/64"
DO NOT SCALE PRINTS

MELIADINE, NU

PROJECT NAME

TITLE:
WASTE WATER CONTAINER
GENERAL ARRANGEMENT

SCALE:	DRAWING NUMBER:	REVISION
N/A	U65875-B01-0001 SHEET: 3 OF 3	00

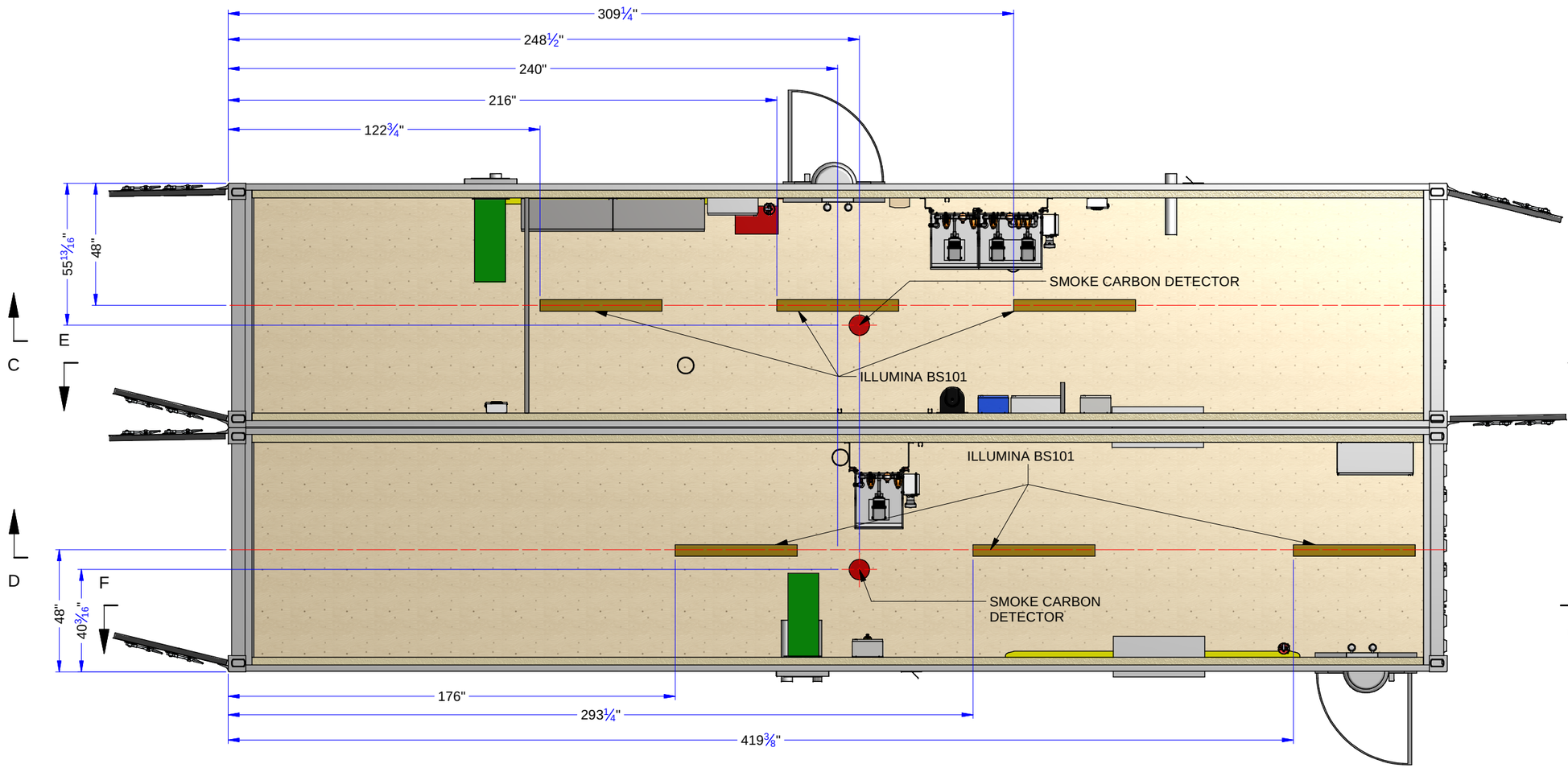

TOP VIEW
ÉLECTRICAL COMPONENTS

NOTE:
THE INFORMATION, SPECIFICATIONS AND DATA SHOWN ON THIS PRINT ARE FURNISHED BY AND ARE TO REMAIN THE PROPERTY OF H_2O INNOVATION.

THE PURPOSE OF THIS DOCUMENT IS TO FACILITATE THE INSTALLATION, MAINTENANCE AND OPERATION OF THE EQUIPMENT REPRESENTED BY SAID PRINT. NO OTHER USE OF THIS DOCUMENT SHALL BE MADE WITHOUT EXPRESS WRITTEN CONSENT FROM H_2O INNOVATION.

DRAWING REVISION

REV	DATE (DD/MM/YYYY)	REVISION DESCRIPTION	DRAWN	PEER	ENG	APPVD
00	30/06/2016	PRELIMINARY	MC	HC	MB	MB

h2o innovation
knowledge to share, du savoir à partager

UNLESS NOTED OTHERWISE
INTERPRETATION: ANSI Y14.5
TOLERANCES:
FRACTIONS: 1/16"
DECIMALS 0.X: ±0.030
0.XX: ±0.015
ANGLES: ±0.5°
HOLE SIZES: 1/32"
HOLE CENTERS: 1/16"
DO NOT SCALE PRINTS

MELIADINE, NU

216 m3/day

TITLE:
WASTE WATER CONTAINER
ELECTRICAL GENERAL ARRANGEMENT

SCALE:	DRAWING NUMBER:	REVISION
N.T.S	U65875-B01-0002 SHEET: 1 OF 9	00

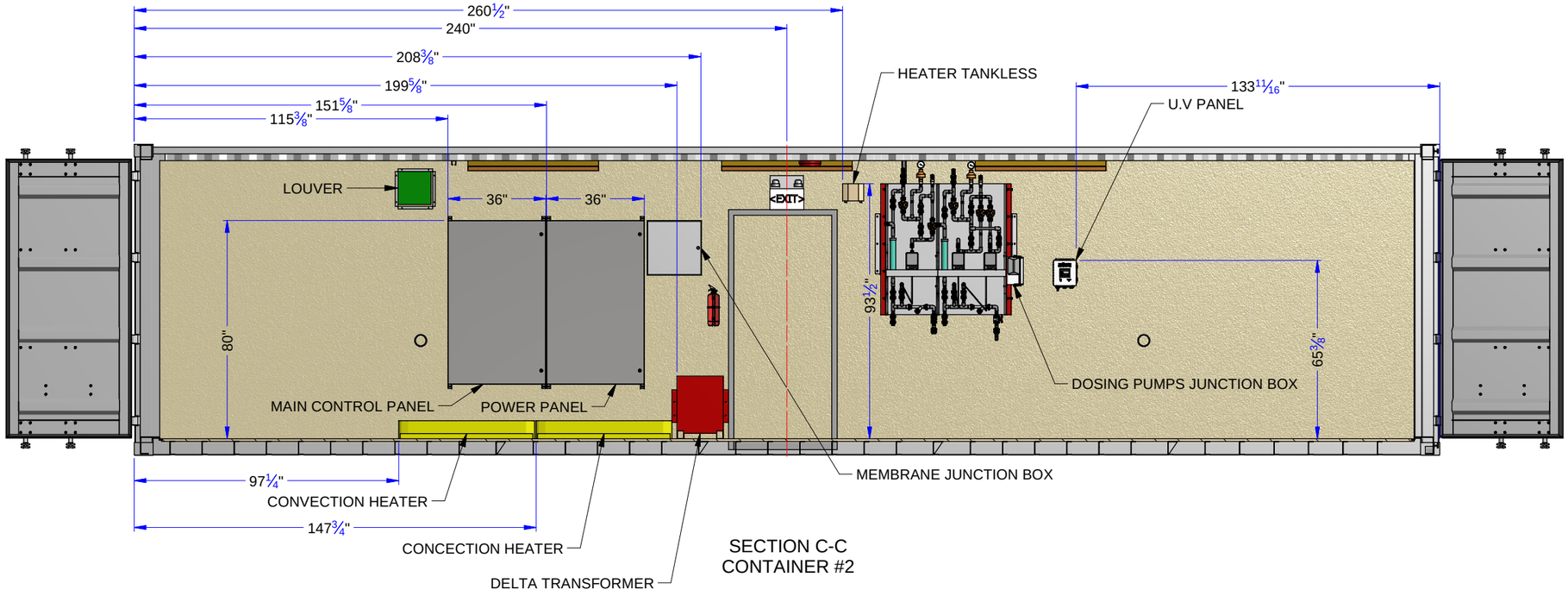

SECTION C-C
CONTAINER #2

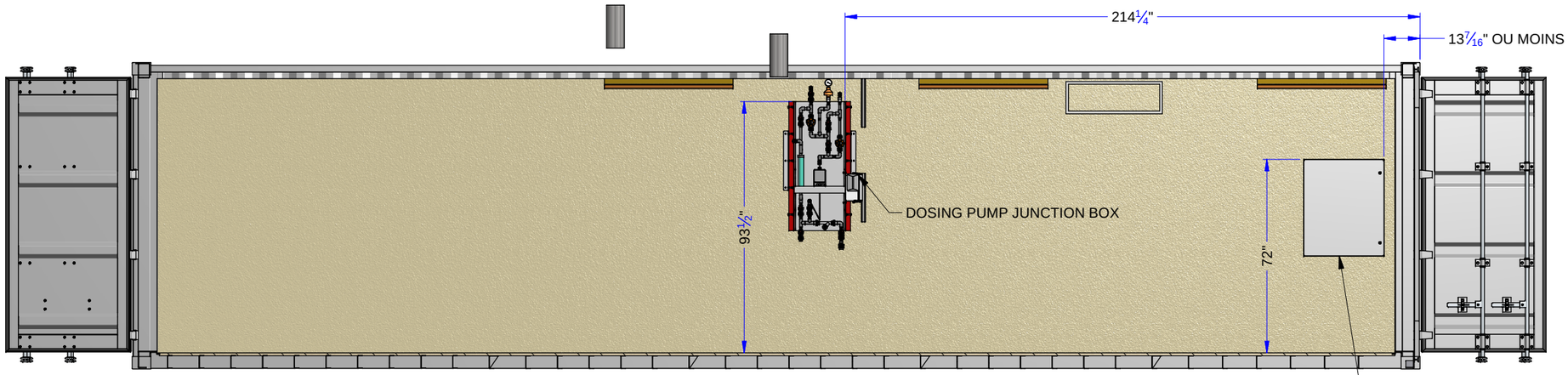

SECTION D-D
CONTAINER #1

NOTE:
THE INFORMATION, SPECIFICATIONS AND DATA SHOWN ON THIS PRINT ARE FURNISHED BY AND ARE TO REMAIN THE PROPERTY OF H_2O INNOVATION.

THE PURPOSE OF THIS DOCUMENT IS TO FACILITATE THE INSTALLATION, MAINTENANCE AND OPERATION OF THE EQUIPMENT REPRESENTED BY SAID PRINT. NO OTHER USE OF THIS DOCUMENT SHALL BE MADE WITHOUT EXPRESS WRITTEN CONSENT FROM H_2O INNOVATION.

DRAWING REVISION

REV	DATE (DD/MM/YYYY)	REVISION DESCRIPTION	DRAWN	PEER	ENG	APPVD
00	30/06/2016	PRELIMINARY	MC	HC	MB	MB

h2o innovation
knowledge to share/du savoir à partager

UNLESS NOTED OTHERWISE
INTERPRETATION: ANSI Y14.5
TOLERANCES:
FRACTIONS: ±1/64"
DECIMALS 0.X: ±0.030
0.XX: ±0.015
ANGLES: ±0.5°
HOLE SIZES: ±1/64"
HOLE CENTERS: ±1/64"
DO NOT SCALE PRINTS

MELIADINE, NU

216 m3/day

TITLE:
WASTE WATER CONTAINER
ELECTRICAL GENERAL ARRANGEMENT

SCALE: N.T.S

DRAWING NUMBER: U65875-B01-0002
SHEET: 2 OF 9

REVISION: 00

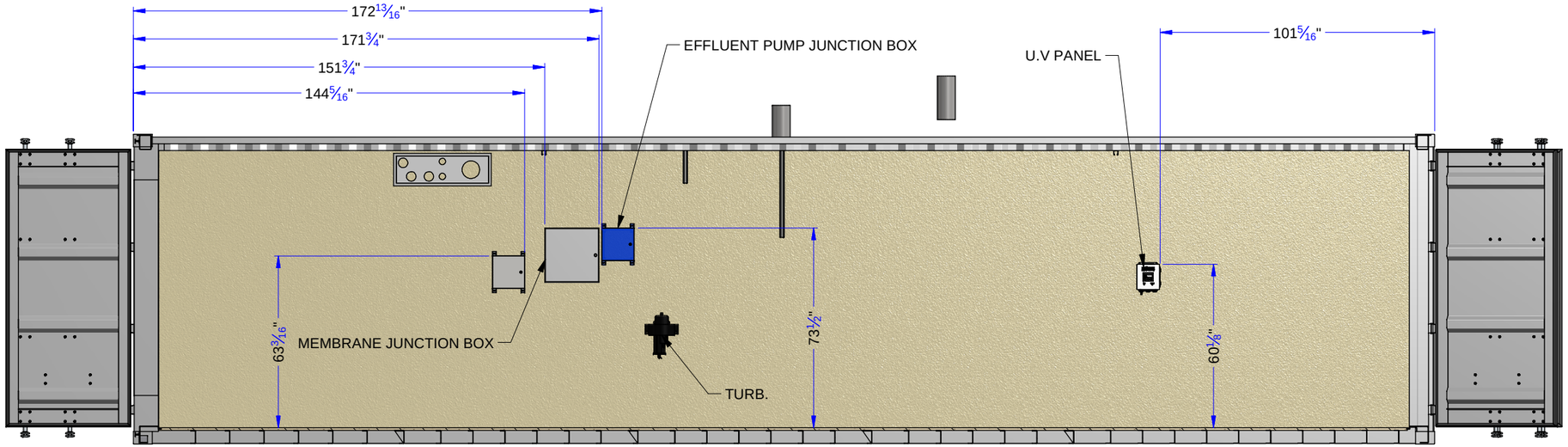

SECTION E-E
CONTAINER #2

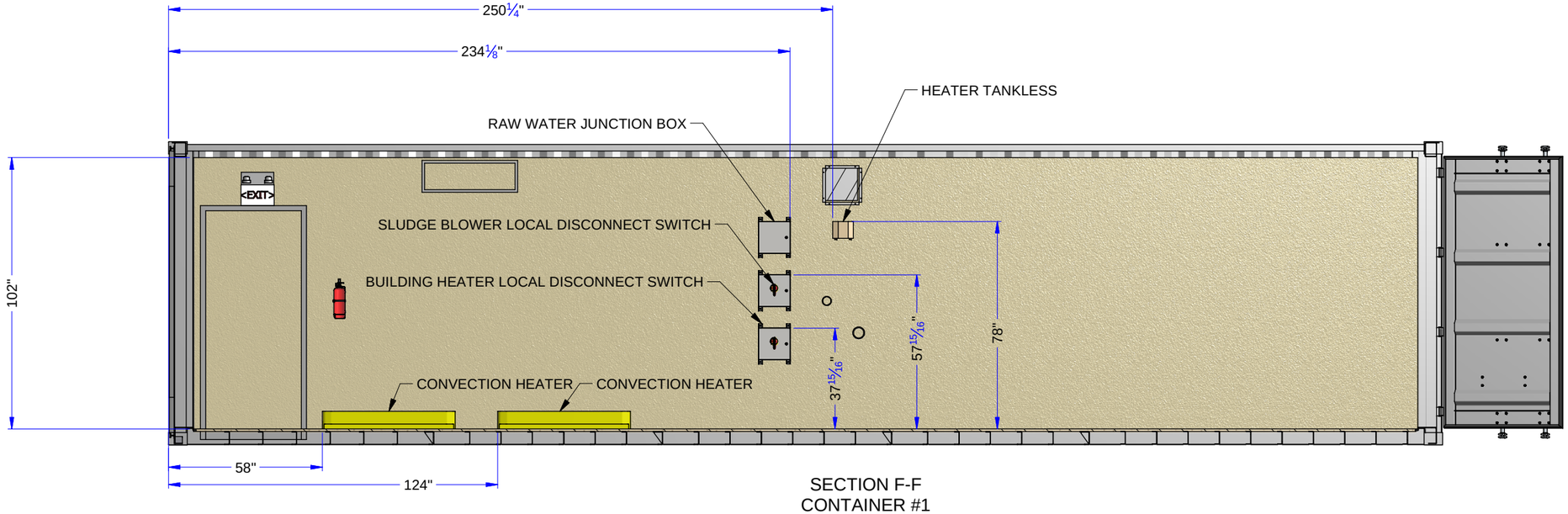

SECTION F-F
CONTAINER #1

NOTE:
THE INFORMATION, SPECIFICATIONS AND DATA SHOWN ON THIS PRINT ARE FURNISHED BY AND ARE TO REMAIN THE PROPERTY OF H_2O INNOVATION.

THE PURPOSE OF THIS DOCUMENT IS TO FACILITATE THE INSTALLATION, MAINTENANCE AND OPERATION OF THE EQUIPMENT REPRESENTED BY SAID PRINT. NO OTHER USE OF THIS DOCUMENT SHALL BE MADE WITHOUT EXPRESS WRITTEN CONSENT FROM H_2O INNOVATION.

DRAWING REVISION

REV	DATE (DD/MM/YYYY)	REVISION DESCRIPTION	DRAWN	PEER	ENG	APPVD
00	30/06/2016	PRELIMINARY	MC	HC	MB	MB

h2o innovation
knowledge to share, du savoir à partager

UNLESS NOTED OTHERWISE
INTERPRETATION: ANSI Y14.5
TOLERANCES:
FRACTIONS: ±1/64"
DECIMALS X.X: ±0.030
X.XX: ±0.015
ANGLES: ±0.5°
HOLE SIZES: ±1/64"
HOLE CENTERS: ±1/64"
DO NOT SCALE PRINTS

MELIADINE, NU

216 m3/day

TITLE:
WASTE WATER CONTAINER
ELECTRICAL GENERAL ARRANGEMENT

SCALE: N.T.S

DRAWING NUMBER: U65875-B01-0002
SHEET: 3 OF 9

REVISION 00

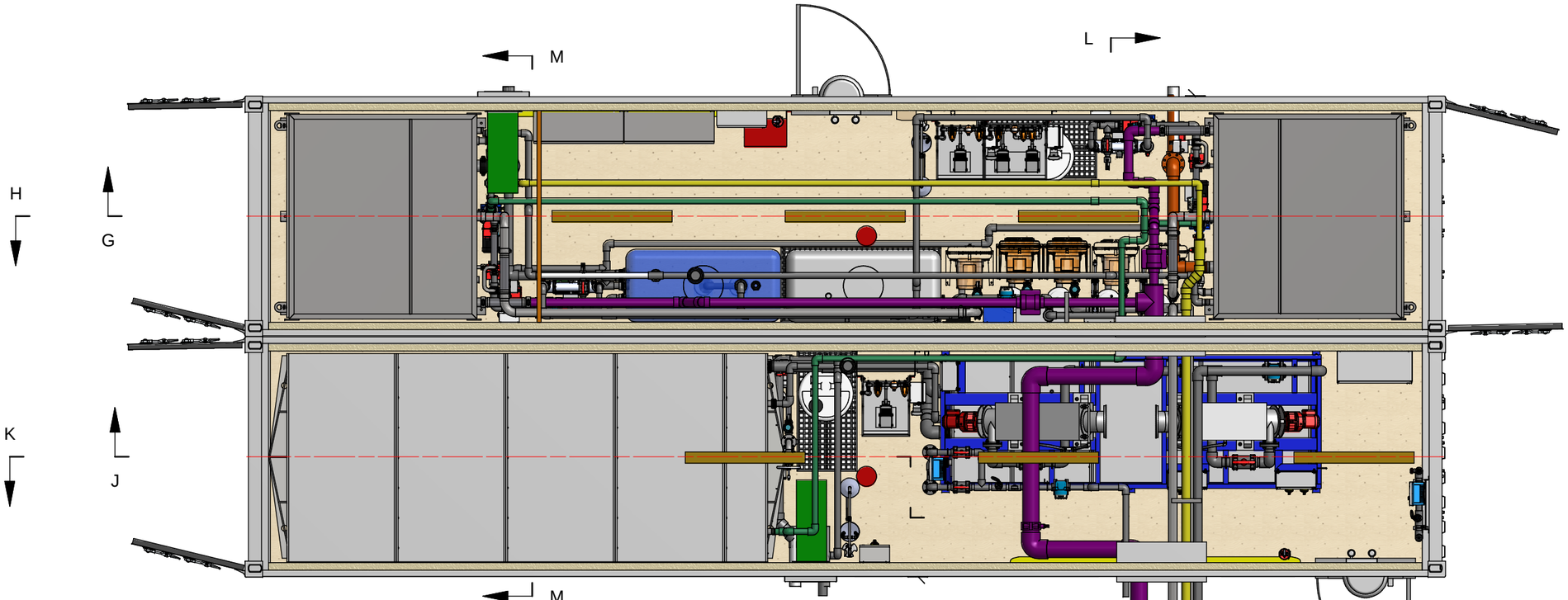

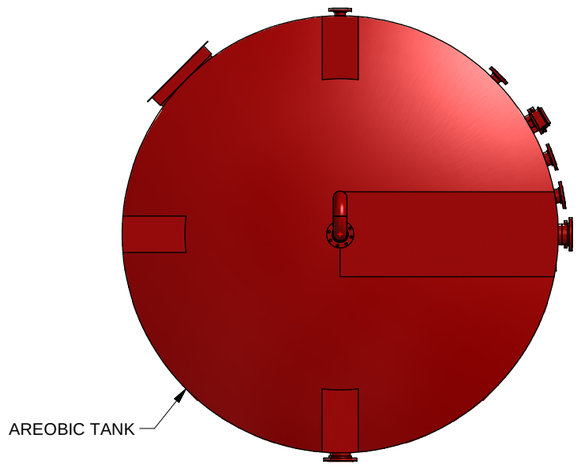

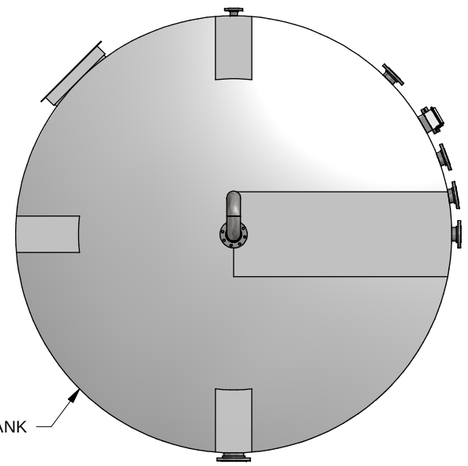

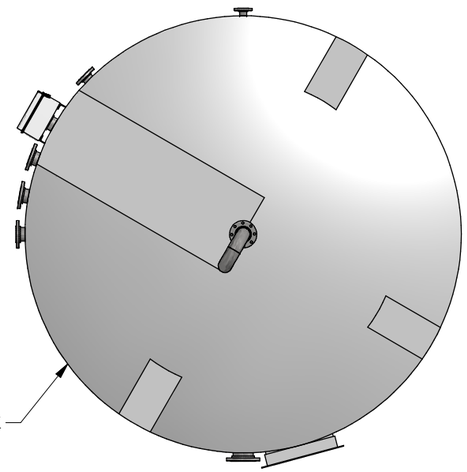

TOP VIEW

NOTE:
THE INFORMATION, SPECIFICATIONS AND DATA SHOWN ON THIS PRINT ARE FURNISHED BY AND ARE TO REMAIN THE PROPERTY OF H_2O INNOVATION.

THE PURPOSE OF THIS DOCUMENT IS TO FACILITATE THE INSTALLATION, MAINTENANCE AND OPERATION OF THE EQUIPMENT REPRESENTED BY SAID PRINT. NO OTHER USE OF THIS DOCUMENT SHALL BE MADE WITHOUT EXPRESS WRITTEN CONSENT FROM H_2O INNOVATION.

DRAWING REVISION

REV	DATE (DD/MM/YYYY)	REVISION DESCRIPTION	DRAWN	PEER	ENG	APPVD
00	30/06/2016	PRELIMINARY	MC	HC	MB	MB

h2o innovation
knowledge to share,du savoir à partager

UNLESS NOTED OTHERWISE
INTERPRETATION: ANSI Y14.5
TOLERANCES:
FRACTIONS: ±1/64"
DECIMALS: 0.X: ±0.030
0.XX: ±0.015
ANGLES: ±0.5°
HOLE SIZES: ±1/64"
HOLE CENTERS: ±1/32"
DO NOT SCALE PRINTS

MELIADINE, NU

216 m3/day

TITLE:
WASTE WATER CONTAINER
ELECTRICAL GENERAL ARRANGEMENT

SCALE:	DRAWING NUMBER:	REVISION
N.T.S	U65875-B01-0002 SHEET: 4 OF 9	00

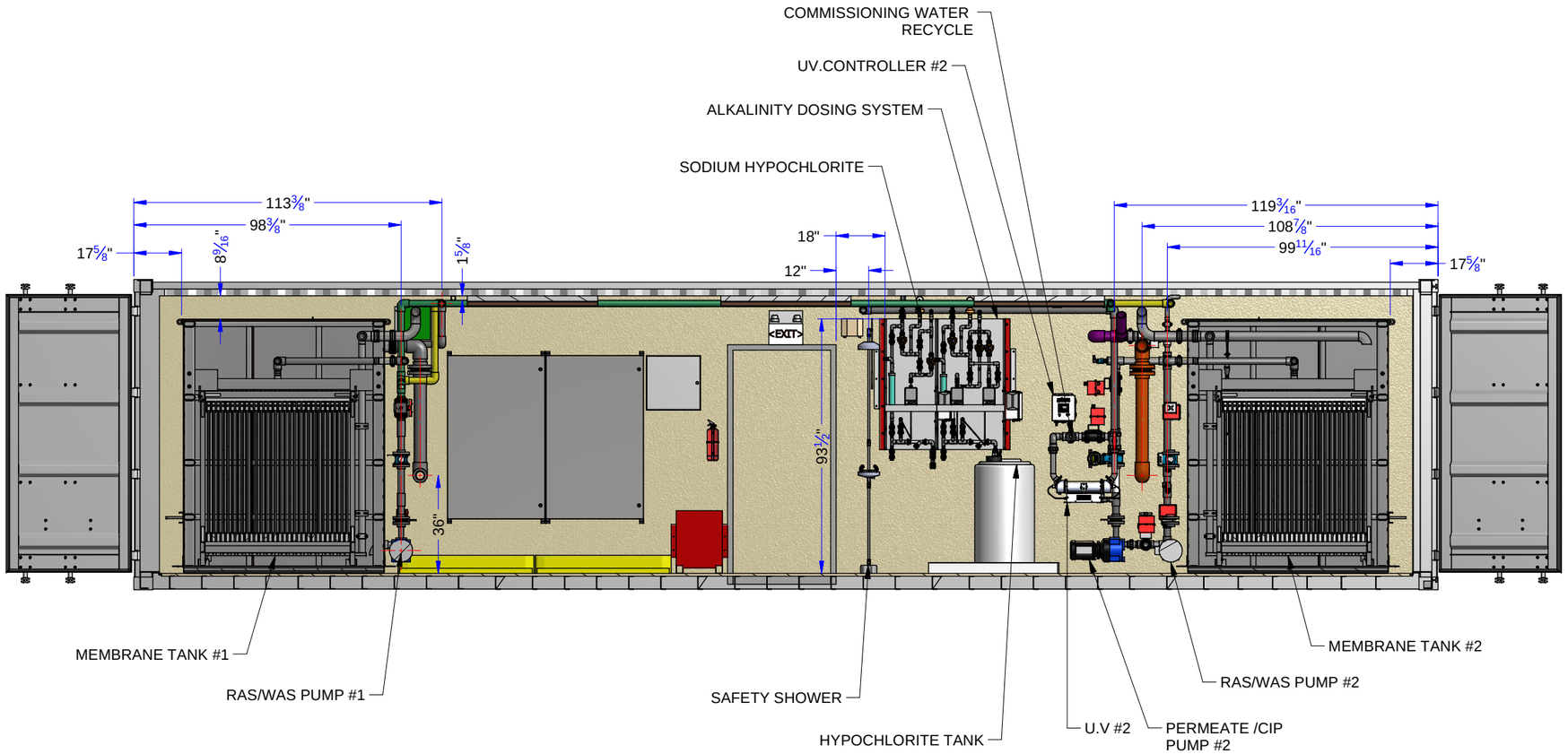

SECTION G-G
CONTAINER #2

NOTE:
THE INFORMATION, SPECIFICATIONS AND DATA SHOWN ON THIS PRINT ARE FURNISHED BY AND ARE TO REMAIN THE PROPERTY OF H_2O INNOVATION.

THE PURPOSE OF THIS DOCUMENT IS TO FACILITATE THE INSTALLATION, MAINTENANCE AND OPERATION OF THE EQUIPMENT REPRESENTED BY SAID PRINT. NO OTHER USE OF THIS DOCUMENT SHALL BE MADE WITHOUT EXPRESS WRITTEN CONSENT FROM H_2O INNOVATION.

DRAWING REVISION

REV	DATE (DD/MM/YYYY)	REVISION DESCRIPTION	DRAWN	PEER	ENG	APPVD
00	30/06/2016	PRELIMINARY	MC	HC	MB	MB

h2o innovation
knowledge to share/du savoir à partager

UNLESS NOTED OTHERWISE
INTERPRETATION: ANSI Y14.5
TOLERANCES
FRACTIONS: ±1/64"
DECIMALS: 0.X: ±0.030
0.XX: ±0.015
ANGLES: ±0.5°
HOLE SIZES: ±1/64"
HOLE CENTERS: ±1/32"
DO NOT SCALE PRINTS

MELIADINE, NU

216 m3/day

TITLE:
WASTE WATER CONTAINER
ELECTRICAL GENERAL ARRANGEMENT

SCALE:	DRAWING NUMBER:	REVISION
N.T.S	U65875-B01-0002 SHEET: 5 OF 9	00

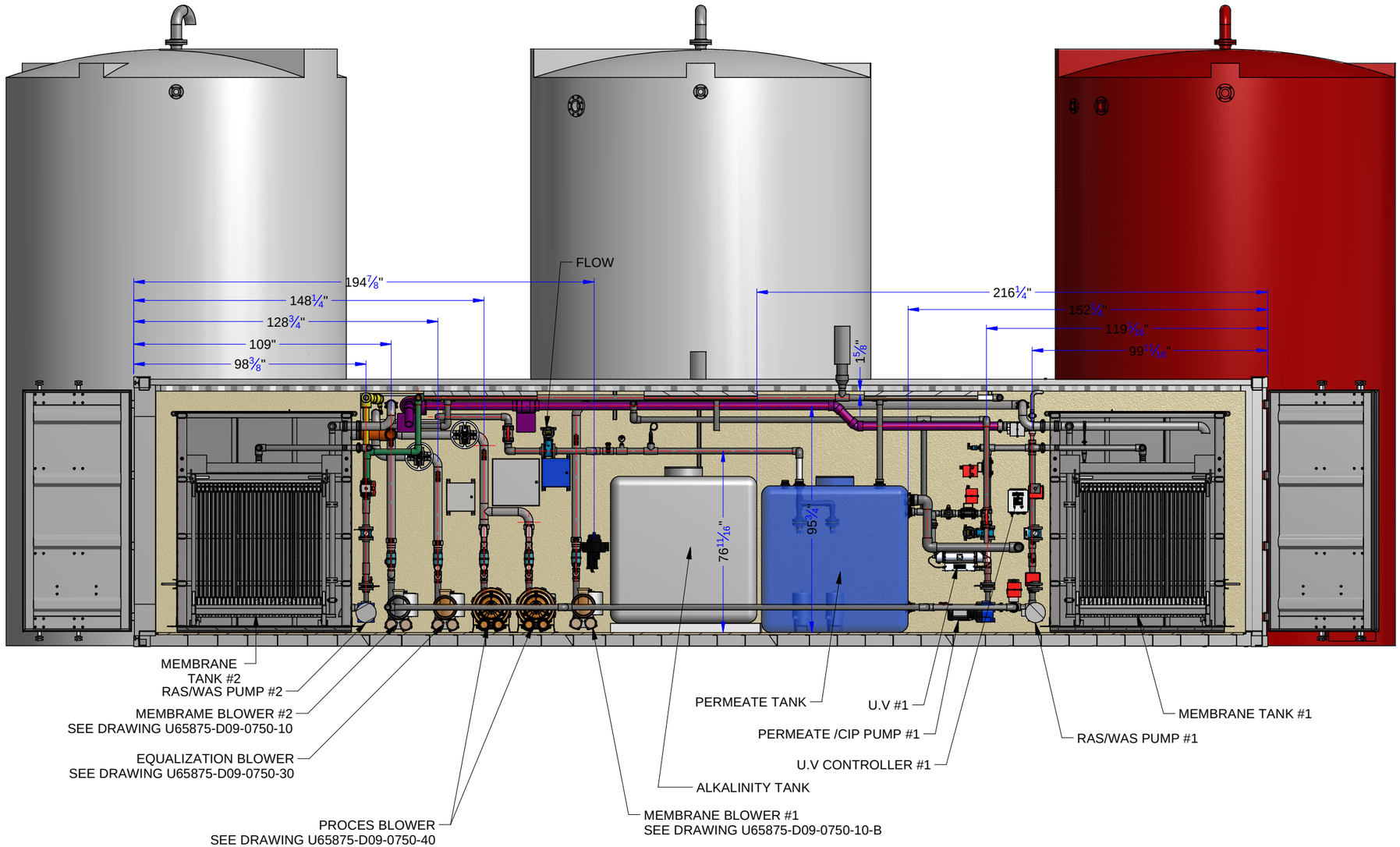

SECTION H-H
CONTAINER #2

NOTE:
THE INFORMATION, SPECIFICATIONS AND DATA SHOWN ON THIS PRINT ARE FURNISHED BY AND ARE TO REMAIN THE PROPERTY OF H_2O INNOVATION.

THE PURPOSE OF THIS DOCUMENT IS TO FACILITATE THE INSTALLATION, MAINTENANCE AND OPERATION OF THE EQUIPMENT REPRESENTED BY SAID PRINT. NO OTHER USE OF THIS DOCUMENT SHALL BE MADE WITHOUT EXPRESS WRITTEN CONSENT FROM H_2O INNOVATION.

DRAWING REVISION

REV	DATE (DD/MM/YYYY)	REVISION DESCRIPTION	DRAWN	PEER	ENG	APPVD
00	30/06/2016	PRELIMINARY	MC	HC	MB	MB

h2o innovation
knowledge to share, du savoir à partager

UNLESS NOTED OTHERWISE
INTERPRETATION: ANSI Y14.5
TOLERANCES:
FRACTIONS: ±1/64"
DECIMALS 0.X: ±0.030
0.XX: ±0.015
ANGLES: ±0.5°
HOLE SIZES: ±1/64"
HOLE CENTERS: ±1/64"
DO NOT SCALE PRINTS

MELIADINE, NU

216 m3/day

TITLE:
WASTE WATER CONTAINER
ELECTRICAL GENERAL ARRANGEMENT

SCALE:

DRAWING NUMBER: U65875-B01-0002
SHEET: 6 OF 9

REVISION 00

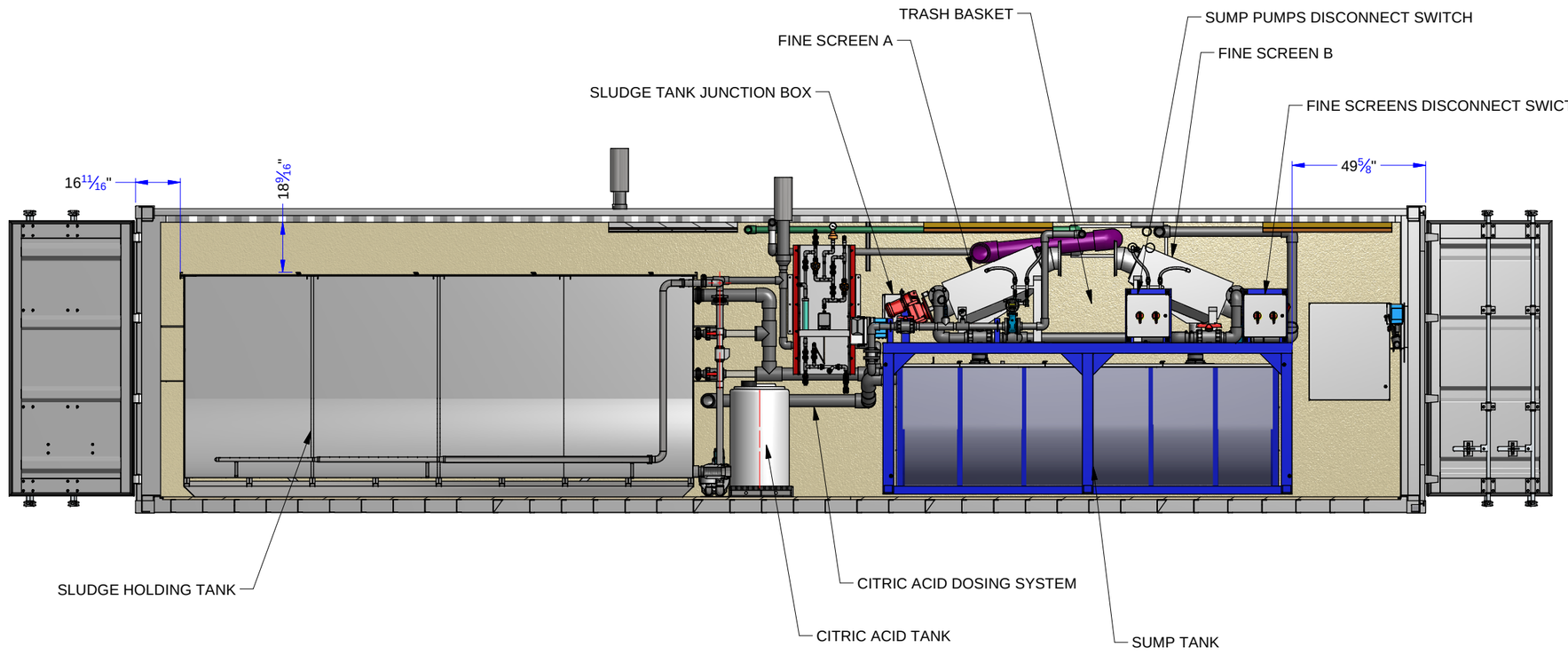

SECTION J-J
CONTAINER #1

NOTE:
THE INFORMATION, SPECIFICATIONS AND DATA SHOWN ON THIS PRINT ARE FURNISHED BY AND ARE TO REMAIN THE PROPERTY OF H_2O INNOVATION.

THE PURPOSE OF THIS DOCUMENT IS TO FACILITATE THE INSTALLATION, MAINTENANCE AND OPERATION OF THE EQUIPMENT REPRESENTED BY SAID PRINT. NO OTHER USE OF THIS DOCUMENT SHALL BE MADE WITHOUT EXPRESS WRITTEN CONSENT FROM H_2O INNOVATION.

DRAWING REVISION

REV	DATE (DD/MM/YYYY)	REVISION DESCRIPTION	DRAWN	PEER	ENG	APPVD
00	30/06/2016	PRELIMINARY	MC	HC	MB	MB

h2o innovation
knowledge to share/du savoir à partager

UNLESS NOTED OTHERWISE
INTERPRETATION: ANSI Y14.5
TOLERANCES
FRACTIONS: ±1/64"
DECIMALS 0.X: ±0.030
0.XX: ±0.015
ANGLES: ±0.5°
HOLE SIZES: ±1/64"
HOLE CENTERS: ±1/64"
DO NOT SCALE PRINTS

MELIADINE, NU

216 m3/day

TITLE:
WASTE WATER CONTAINER
ELECTRICAL GENERAL ARRANGEMENT

SCALE: N.T.S

DRAWING NUMBER: U65875-B01-0002
SHEET: 7 OF 9

REVISION: 00

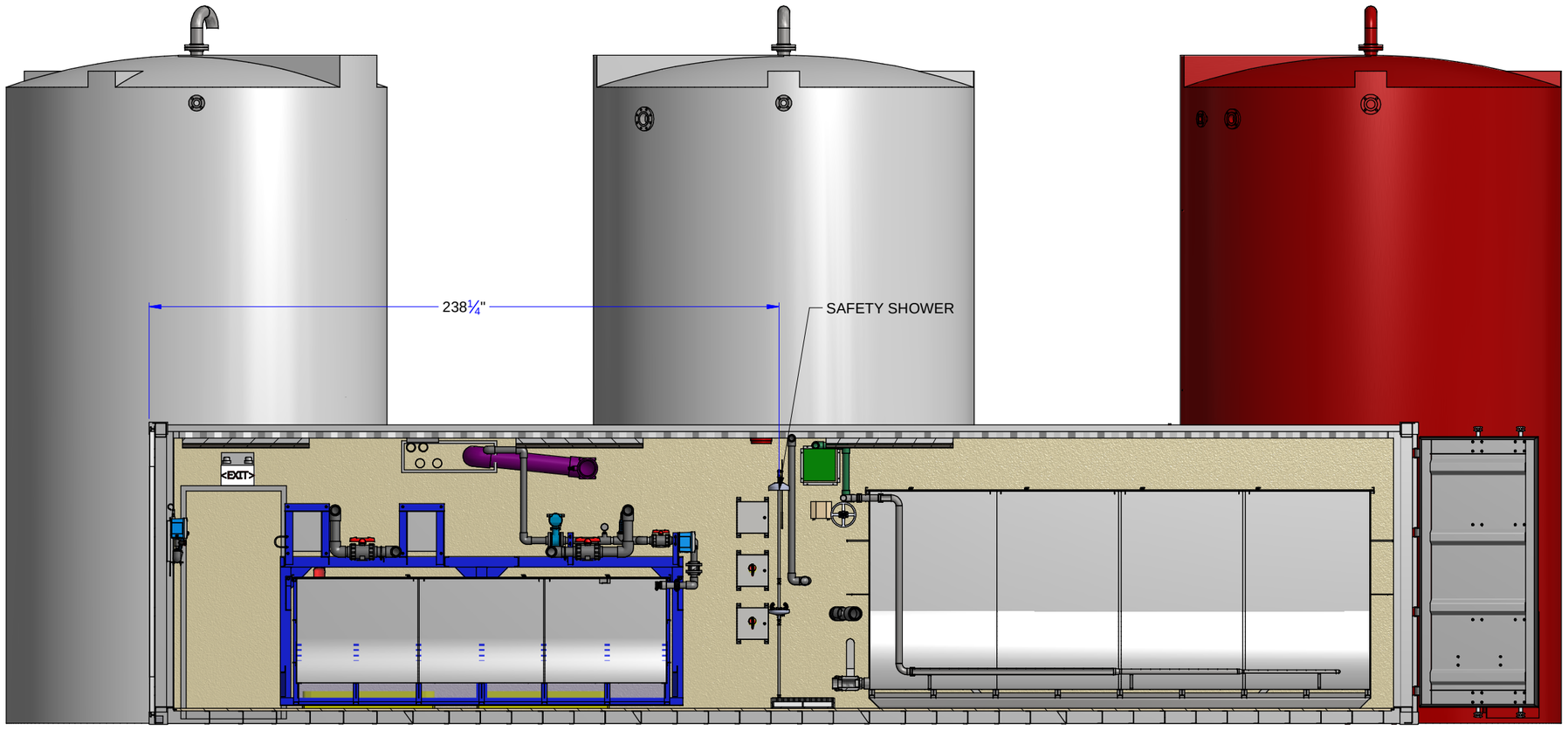

SECTION K-K
CONTAINER #1

NOTE:
THE INFORMATION, SPECIFICATIONS AND DATA SHOWN ON THIS PRINT ARE FURNISHED BY AND ARE TO REMAIN THE PROPERTY OF H_2O INNOVATION.

THE PURPOSE OF THIS DOCUMENT IS TO FACILITATE THE INSTALLATION, MAINTENANCE AND OPERATION OF THE EQUIPMENT REPRESENTED BY SAID PRINT. NO OTHER USE OF THIS DOCUMENT SHALL BE MADE WITHOUT EXPRESS WRITTEN CONSENT FROM H_2O INNOVATION.

DRAWING REVISION

REV	DATE (DD/MM/YYYY)	REVISION DESCRIPTION	DRAWN	PEER	ENG	APPVD
00	30/06/2016	PRELIMINARY	MC	HC	MB	MB

h2o innovation
knowledge to share/du savoir à partager

UNLESS NOTED OTHERWISE
INTERPRETATION: ANSI Y14.5
TOLERANCES
FRACTIONS: ±1/64"
DECIMALS: 0.X: ±0.030
0.XX: ±0.015
ANGLES: ±0.5°
HOLE SIZES: ±1/64"
HOLE CENTERS: ±1/32"
DO NOT SCALE PRINTS

MELIADINE, NU

216 m3/day

TITLE:
WASTE WATER CONTAINER
ELECTRICAL GENERAL ARRANGEMENT

SCALE:	DRAWING NUMBER:	REVISION
N.T.S	U65875-B01-0002 SHEET: 8 OF 9	00

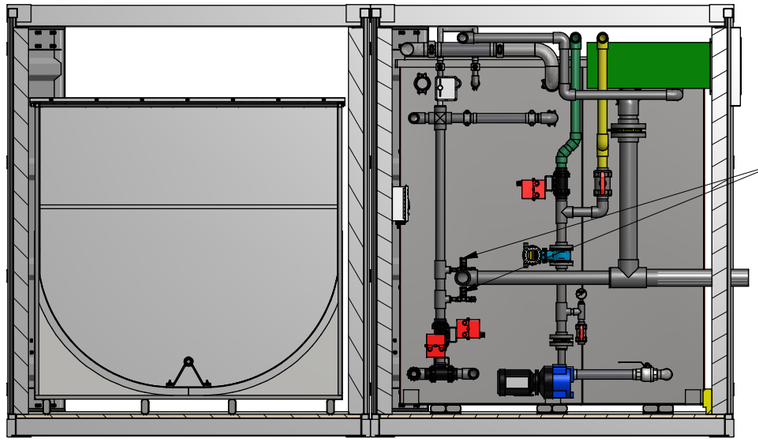

SECTION M-M

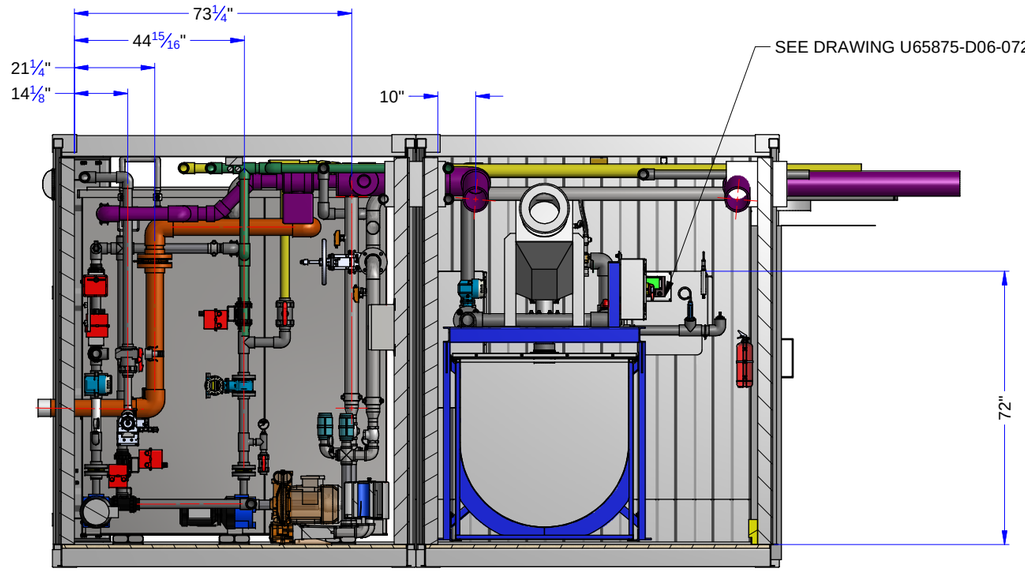

SECTION L-L

NOTE:
THE INFORMATION, SPECIFICATIONS AND DATA SHOWN ON THIS PRINT ARE FURNISHED BY AND ARE TO REMAIN THE PROPERTY OF H_2O INNOVATION.

THE PURPOSE OF THIS DOCUMENT IS TO FACILITATE THE INSTALLATION, MAINTENANCE AND OPERATION OF THE EQUIPMENT REPRESENTED BY SAID PRINT. NO OTHER USE OF THIS DOCUMENT SHALL BE MADE WITHOUT EXPRESS WRITTEN CONSENT FROM H_2O INNOVATION.

DRAWING REVISION

REV	DATE (DD/MM/YYYY)	REVISION DESCRIPTION	DRAWN	PEER	ENG	APPVD
00	30/06/2016	PRELIMINARY	MC	HC	MB	MB

h2O innovation
knowledge to share,du savoir à partager

UNLESS NOTED OTHERWISE
INTERPRETATION: ANSI Y14.5
TOLERANCES
FRACTIONS: ±1/64"
DECIMALS X.X: ±0.030
X.XX: ±0.015
ANGLES: ±0.5°
HOLE SIZES: ±1/64"
HOLE CENTERS: ±1/64"
DO NOT SCALE PRINTS

MELIADINE, NU

216 m3/day

TITLE:
WASTE WATER CONTAINER
ELECTRICAL GENERAL ARRANGEMENT

SCALE: N.T.S

DRAWING NUMBER: U65875-B01-0002
SHEET: 9 OF 9

REVISION: 00

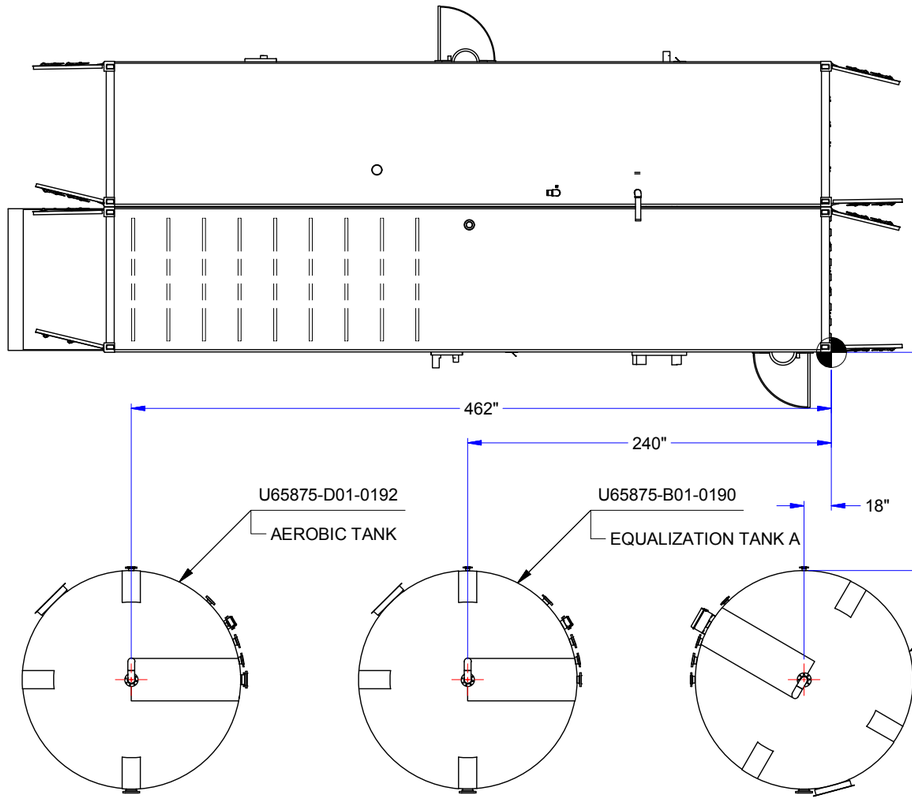

TOP VIEW

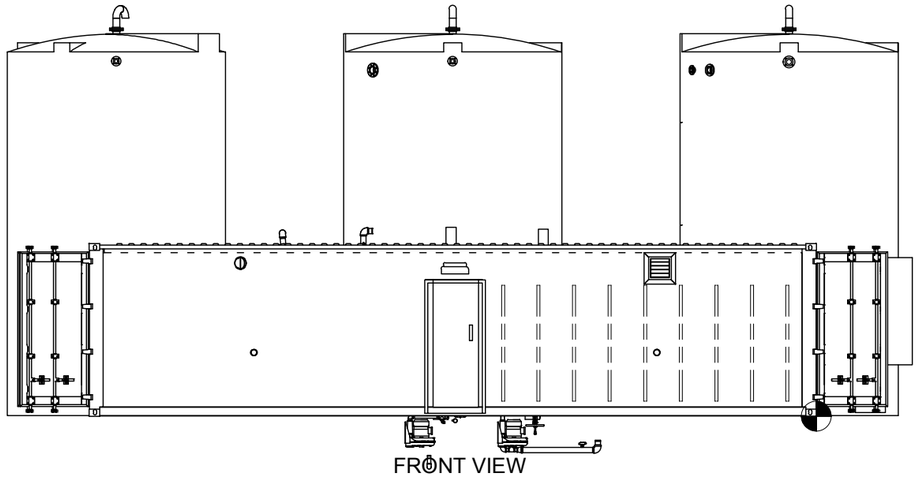

FRONT VIEW

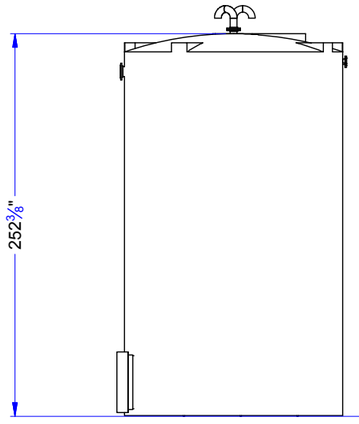

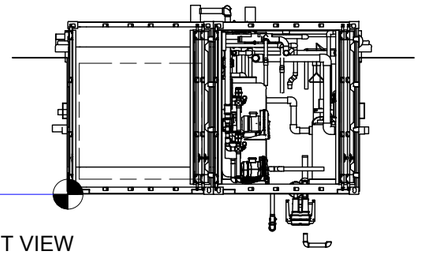

RIGHT VIEW

NOTE:
THE INFORMATION, SPECIFICATIONS AND DATA SHOWN ON THIS PRINT ARE FURNISHED BY AND ARE TO REMAIN THE PROPERTY OF H_2O INNOVATION.

THE PURPOSE OF THIS DOCUMENT IS TO FACILITATE THE INSTALLATION, MAINTENANCE AND OPERATION OF THE EQUIPMENT REPRESENTED BY SAID PRINT. NO OTHER USE OF THIS DOCUMENT SHALL BE MADE WITHOUT EXPRESS WRITTEN CONSENT FROM H_2O INNOVATION.

DRAWING REVISION

REV	DATE (DD/MM/YYYY)	REVISION DESCRIPTION	DRAWN	PEER	ENG	APPVD
0	19/07/2016	PRELIMINARY	Y.D.	M.B.	M.B.	A.M.

h2o innovation
knowledge to share.du savoir à partager

UNLESS NOTED OTHERWISE
INTERPRETATION: ANSI Y14.5
TOLERANCES:
FRACTIONS: ±1/64"
DECIMALS .0.X: ±0.030
.0.XX: ±0.015
ANGLES: ±0.5°
HOLE SIZES: ±1/64"
HOLE CENTERS: ±1/64"
DO NOT SCALE PRINTS

MELIADINE STP

MELIADINE

TITLE:
TANKS POSITIONS
216 M3/DAY

SCALE:	DRAWING NUMBER:	REVISION
N.T.S.	U65875-B01-0003 SHEET: 1 OF 1	0

9.4 - EQUIPMENT LIST

H2O Equipment List

PROJECT: Meliadine Mine WWTP

PROJECT NUMBER: U65875

PROJECT MANAGER: Alexis Morissette

DOCUMENT NUMBER: U65875-C05-0001

REVISION: 0

REVISION DATE: 2016-07-11 (YYYY-MM-DD)

Engineer	Engineer	Engineer	Engineer	Engineer	Engineer	Engineer	Engineer	Engineer	Engineer	Engineer	Engineer	Engineer	Engineer
Revision	Tag	Functional Description	Quantity	Model	Manufacturer	Item Description	Process Fluid	Wet Material Characteristics	Mechanical Characteristics	Electrical Characteristics	Inlet Connection Size (in)	Outlet Connection Size (in)	Connection Type
0	SCR-11200 A/B	Fine Screens Main Equipment	2	SLB-636-2MM-575/3/60	IPEC	IPEC SCREEN/COMPACTOR WITH SELF CLEANING OPTION: SLB SERIES 130 GPM CAPACITY, SS304, 2MM WEDGE WIRE, 3 PH, ½ HP MOTOR, 575V , EX Class 1 Div 2 TEFC, 3'' INLET FLANGE CLASS 150 & 4'' OUTLET FLANGE CLASS 150, IPESLB636-575	Raw Water	SS304	2 SPRAY WASH INLET 1/2''FNPT	600V/3Ph/60Hz	3'' FLANGE #150 AND 2X1/2''FNPT	4,00	Flange ANSI 150
0	T-11800	Trash Basket	1	IPECBAG	IPEC	IPEC SCREEN/COMPACTOR WITH SELF CLEANING SMALL BAGGER OPTION - INCLUDED 3 5' BAGS	Raw Water	---	5' BAGS	---	---	---	---
NO	P-12200 A/B	Sump Pump into Sump Tank	2	WS1037B	Goulds	SUMBERSIBLE PUMP GOULDS, 2'' FNPT CONNEXION, 1 HP/575V/60Hz #WS1037B	Raw Water	Cast iron	2'' solids pump	575VAC/3Ph/60Hz, 1HP	---	2,00	FNPT
0	CBD-19086	EQ Tank Coarses Bubble Diffuser	8	MAXAIR24-865	EDI	EDI MAXAIR24 COARSE BUBBLE AERATOR 24'' LONG, 316SS, 3/4'' M-NPT, # MAXAIR-24''(00865)	EQUALIZED WATER	SS316/EPDM/ABS/PVC	0-55 scfm	---	0,75	NA	M-NPT
	P-19200 A/B	Equalization Pumps Main Equipment	2	WS0737B	Goulds	SUMBERSIBLE PUMP GOULDS, 2'' FNPT CONNEXION, 0.75HP/575V/60Hz #WS0737B	EQUALIZED WATER	Cast iron	2'' solids pump	575VAC/3Ph/60Hz, 0,75HP	---	2,00	FNPT
	T-19200 A	Equalization Tank 1	1			EQUALIZATION TANK 400 BBL, 63m3	EQUALIZED WATER	Cast iron	400 BBL	---	VARIES	VARIES	VARIES
	T-19200 B	Equalization Tank 2	1			EQUALIZATION TANK 400 BBL, 63m3	EQUALIZED WATER	Cast iron	400 BBL	---	VARIES	VARIES	VARIES
	T-72000	Aerobic Tank	1			AEROBIC TANK 400 BBL, 63m3	AEROBIC TANK	Cast iron	400 BBL	---	VARIES	VARIES	VARIES
0	FBD-72086	Aerobic Tank Fine Bubble Diffuser	6	91-1003	EDI	EDI FLEXAIR FINE BUBBLE AERATOR 40'' LONG, 316SS/EPDM/PVC/ABS , 3/4 M- NPT, 0-25 SCFM # 91-1003	Raw Water	SS316/EPDM/ABS/PVC	0-25 scfm	N/A	0,75	---	M-NPT
0	---	Level Mounting Cable Clamp	5	52006151	Endress Hauser	ENDRESS & HAUSER MOUNTING CLAMP 316L FOR 7.5MM-10.5MM CABLE, #52006151		SS316L/POLYAMIDE	---	---			
0	F-74000-1, F-74000-2	Membrane Tank Main Equipment Cage	2	HSC-450-ES	H2O Innovation	HYDRANAUTICS MEMBRANE CAGE 750 M2, WITH ELEMENT HSE-15, REV #HSC450-ES	Membranes	SS316	450 sq, meter surface	N/A	2'' groove for Air Diffuser inlet, 2'' groove for permeate Outlet	---	GROOVE
0	F-74000-1, F-74000-2	Membrane Tank Main Equipment	60	HSE-15	Hydranautics	HYDRANAUTIC MEMBRANE HYDRASUB HSE15	Membranes	PVDF,	---	N/A	---	24mm	TUBE
0	F-74000-1, F-74000-2	Membrane Tank Main Equipment	125	HSA-25	Hydranautics	HYDRANAUTIC HYDRASUB CONNECTION TUBE #HSA25	Membranes	ABS, EPDM PTEF	---	N/A	24mm	24mm	TUPE
0	P-79000-T	MBR Permeate / Process Pumps Main Equipment	2	316A95-575V	Gorman Rupp	GORMAN RUPP AMT316A-95 PUMP, SELF PRIMING, INLET/OUTLET CONN 2'' FNPT, 3PH/60HZ/575V, 3 HP	Membranes	PAINTED STEEL/VITON	HANDLE 1'' SOLID	575V/60 hz/3PH, 3HP, VARIABLE MOTOR	2,00	2,00	FNPT
0	P-74600-T	Return Activated Sludge Pumps Main Equipment	2	316A95-575V	Gorman Rupp	GORMAN RUPP AMT316A-95 PUMP, SELF PRIMING, WETTED MATERIAL: CAST IRON, INLET/OUTLET CONN 2'' FNPT, 3PH/60HZ/575V, 3 HP	RAS/WAS	PAINTED STEEL/VITON	HANDLE 1'' SOLID	575V/3PH, 3HP, VARIABLE MOTOR	2,00	2,00	FNPT
	UV-91000-T	UV Units Main Equipment	2	1538-068	NEOTECH AQUA	UV WATER PURIFICATION, NEOTECH AQUA D322-1, 185/254NM LAMP, 120VAC, 1PH, 100 GPM #1538-068	Membranes	PAINTED STEEL	DUTY POINT: 40 gpm, > 75% UVT	120V/1PH, 98W	2" TriClamp	2" TriClamp	TriClamp
	------	UV Transmitter	2	2035-016	NEOTECH AQUA	CONTROLLER CU-11, NEMA 4X, LED DISPLAY, 1 UV UNIT CONTROL, 120 VOLTS. 3 FAULTS RELAY OUTPUT, 1 DIGITAL INPUT (REMOTE START/STOP) AND 1 ANALOGUE OUTPUT (INTENSITY) # 2035-016							
	UV-91000-T	UV LIGHT KIT SPARE	6	2164-001	NEOTECH AQUA	LIGHT KIT SPARE, LK-22 IN 22 IN SYSTEM. LP AMALGAM 185/254 nm	Membranes	---	---	N/A	---	---	---
	UV-91000-T	UV Units Main Equipment	2	1959	NEOTECH AQUA	BALLAST, ELECTRONIC, 120VAC, 50-60Hz BK-120-4W #1959	Membranes	---	---	120V/1PH, 98W	---	---	---
0	F-75020	Equalization Tank Blower Filter	1	FS-231P-200	FPZ	FILTRE A AIR / SILENCIEUX POUR SOUFFLANTE FPZ, CONNECTION 2''MNPT # FS-231P-200	Equalization Tank	---	---	INCLUDED WITH FPZ ELEMENT AIR FILTER FOR FILTER / SILENCER FS-231P. # FE-231P	---	2,00	MNPT
0	B-75000	Equalization Tank Blower	1	K08R-MD-15-3-575	FPZ	REGENERATIVE BLOWER, ALUMINIUM, 2'' NPT CONNECTION, 15HP, 575V/3PH/60HZ, #K08R-MD-15-3-575	Equalization Tank	---	Die Cast Aluminium	575VAC/3Ph/60Hz, 15HP	2,00	2,00	FNPT
0	F-75083	Equalization Tank Blower Flexible	1	HA111-032NE032UK032-0180	HEBDRAULIQUE	FLEXIBLE HOSE SS321, 2''X18'' LENGTH, MNPT X MNPT SWIVEL, 300PSI WOG. HEBDRAULIQUE #HA111-032NE032UK032-0180.	Equalization Tank	SS321	---	---	2,00	2,00	MNPT
0	F-75240 A/B	Process Aerobic Tank Blower Filter	2	FS-231P-200	FPZ	FPZ AIR FILTER / SILENCER FOR REGENERATIVE BLOWER, CONNEXION 2''MNPT # FS-231P-200	Aerobic Tank	---	---	INCLUDED WITH FPZ ELEMENT AIR FILTER FOR FILTER / SILENCER FS-231P. # FE-231P	---	2,00	MNPT
0	B-75240 A/B	Process Aerobic Tank Blower	2	K07R-MD-7.5HP-3-575	FPZ	REGENERATIVE BLOWER, ALUMINIUM, 2'' NPT CONNECTION, 7.5HP, 575V/3PH/60HZ, #K07R-MD-7.5-3-575	Aerobic Tank	---	Die Cast Aluminium	575VAC/3Ph/60Hz, 7,5HP	2,00	2,00	FNPT

H2O Equipment List

PROJECT: Meliadine Mine WWTP

PROJECT NUMBER: U65875

PROJECT MANAGER: Alexis Morissette

DOCUMENT NUMBER: U65875-C05-0001

REVISION: 0

REVISION DATE: 2016-07-11 (YYYY-MM-DD)

Engineer	Engineer	Engineer	Engineer	Engineer	Engineer	Engineer	Engineer	Engineer	Engineer	Engineer	Engineer	Engineer	Engineer
Revision	Tag	Functional Description	Quantity	Model	Manufacturer	Item Description	Process Fluid	Wet Material Characteristics	Mechanical Characteristics	Electrical Characteristics	Inlet Connection Size (in)	Outlet Connection Size (in)	Connection Type
0	F-75283 A/B	Process Aerobic Tank Blower Flexible	2	HA111-032NE032UK032-0180	HEBDRAULIQUE	FLEXIBLE HOSE SS321, 2''X18'' LENGTH, MNPT X MNPT SWIVEL, 300PSI WOG. HEBDRAULIQUE #HA111-032NE032UK032-0180.	Aerobic Tank	SS321	---	---	2,00	2,00	MNPT
0	F-75420 A/B	Membrane Tank Blower Filter	2	FS-231P-200	FPZ	FILTRE A AIR / SILENCIEUX POUR SOUFFLANTE FPZ, CONNEXION 2''NPT # FS-231P-200	Membranes Tank	---	---	INCLUDED WITH FPZ ELEMENT AIR FILTER FOR FILTER / SILENCER FS-231P. # FE-231P	---	2,00	MNPT
0	B-75400 A/B	Membrane Tank Blower	2	K06-MS-5.5-3-575 NP	FPZ	REGENERATIVE BLOWER, WETTED MATERIAL: ALUMINUM, CONNECTION: 2'' NPT, POWER: 5.5HP, 60HZ, 575V, 3 PH #SCL K06-MS-5.5-3-575-NP	Membranes Tank	---	Die Cast Aluminium	575VAC/3Ph/60Hz, 5,5HP	2,00	2,00	FNPT
0	F-75483 A/B	Membrane Tank Blower Flexible	2	HA111-032NE032UK032-0180	HEBDRAULIQUE	FLEXIBLE HOSE SS321, 2''X18'' LENGTH, MNPT X MNPT SWIVEL, 150PSI VAPEUR/ 300PSI WOG. HEBDRAULIQUE #HA111-032NE032UK032-0180.	Membranes Tank	SS321	---	---	2,00	2,00	MNPT
0	F-75820	Sludge Tank Blower Filter	1	FS-19P-150	FPZ	AIR FILTER FOR FPZ REGENERATIVE BLOWER, CONNECTION 1.5'' MNPT # FS-19P-150	Sludge Tank	---	---	INCLUDED WITH FPZ ELEMENT AIR FILTER FOR FILTER / SILENCER FS-19P. # FE-19P	---	1,50	MNPT
0	B-75800	Sludge Tank Blower	1	K04-MS-3-3-575	FPZ	REGENERATIVE BLOWER, CONNECTION: 1.5'' NPT, POWER: 3PH, 60HZ, 575V, 3 HP, #SCL K04-MS-3-3-575	Sludge Tank	---	Die Cast Aluminium	575VAC/3Ph/60Hz, 3HP	1,50	1,50	FNPT
0	F-75883	Sludge Tank Blower Flexible	1	HA111-032NE032UK032-0180	HEBDRAULIQUE	FLEXIBLE HOSE SS304, 1-1/2''X18'' LENGTH, MNPT X MNPT SWIVEL, 300PSI WOG. HEBDRAULIQUE #HA111-032NE032UK032-0180.	Sludge Tank	SS321	---	---	1,50	1,50	MNPT
0	P-79600 A/B	Treated Water Distribution Network Main Equipment	2	WS1037B	Goulds	SUMBERSIBLE PUMP GOULDS, 2'' FNPT CONNEXION, 1 HP/575V/60Hz #WS1037B	Effluent Pump	Cast iron	2'' solids pump	575VAC/3Ph/60Hz 0,5HP	---	2,00	FNPT
0	T-79200	MBR Permeate Holding Tank Tank	1	RT SPO400UT	Dultmeier	CLOSED TOP TANK, CAPACITY OF 400 US GALLONS (1500 LITRES) 62'' Wx29''Lx66''H, DPE, LIQUID SPECIFIC GRAVITY LESS THAN 1.7. # RTSPO400UT	Permeate/CIP	Polyethylene tank, polypropylene lid with santoprene gasket	Top Lid 16''	---	VARIES	VARIES	VARIES
0	T-83700	Citric Acid Tank	1	PTB-200	ACO Tank	ACO TANK AL 200 LITERS 22" X 39" HDPE POLY TOTE BARREL WITH 5 1/2'' Lid# PTB-200	Dosing System	HDPE	Top Lid 5-1/2''	---	VARIES	VARIES	VARIES
	ST-83700	Citric Acid Spill Tank	1	As per Drawing	H2O Innovation	H2O CONTAINERS CONTAINMENT BASIN, 40 GALLONS CAPACITY (180 LITERS), PE, W24'' x L24'' x H24''.	Dosing System	HDPE	Open Top	---	---	---	---
0	STR-83720	Citric Acid Strainer	1	192.306.300	Georg Fischer	GEORGE FISHER, LINE STRAINER TYPE 306, PVC/EPDM, 20 MESH, 1/2" SPIGOT, #192.306.300	Dosing System	PVC, EPDM	---	---	0,50	0,50	Spigot
0	FQG-83713	Citric Acid Calibration Column	1	PV-2-500	Primary Fluid System	CALIBRATION COLUMN, 500 ML, PVC 1/2'' NPT, # PV -2 - 500	Dosing System	PVC	500 ml	---	0,50	0,50	F-NPT
0	P-83700	Citric Acid Tank Main Equipment	1	GMXa0220NPE2U000UD1130BEN	Prominent	Prominent Solenoid Diaphragm Metering Pump GMXa1009NPE2U000UD1130BEN, 100-230 V, ±10 %, 50/60 Hz, 1/2''OD x 3/8''ID Tubing, Includes Foot Valve, Suction & Discharge, Tubing and Injection Valve #GMXa1009NPE2U000UD1130BEN	Dosing System	PVC,EPDM,PTFE	29 psi	120 VOLTS	1/2''OD x 3/8''ID	1/2''OD x 3/8''ID	TUBE
0	---	Pump Cable	4	1001301	Prominent	Control Cable #1001301							
0	---	level switch	4	7142038	Prominent								
0	T-83500	Hypochlorite Tank	1	PTB-200	ACO Tank	ACO TANK AL 200 LITERS 22" X 39" HDPE POLY TOTE BARREL WITH 5 1/2'' Lid# PTB-200	Dosing System	HDPE	Top Lid 5-1/2''	---	VARIES	VARIES	VARIES
0	STR-83520	Hypochlorite Strainer	1	192.306.300	Georg Fischer	GEORGE FISHER, LINE STRAINER TYPE 306, PVC/EPDM, 20 MESH, 1/2" SPIGOT, #192.306.300	Dosing System	PVC, EPDM	---	---	0,50	0,50	Spigot
0	FQG-83513	Hypochlorite Calibration Column	1	PV-2-500	Primary Fluid System	CALIBRATION COLUMN, 500 ML, PVC 1/2'' NPT, # PV -2 - 500	Dosing System	PVC	500 ml	---	0,50	0,50	F-NPT
0	P-83500	Hypochlorite Pump	1	GMXa0220PVT7U000UD1130BEN	Prominent	Prominent GMXA Solenoid Diaphragm Metering Pump, 100-230 V, ±10 %, 50/60 Hz, 1/2''OD x 3/8''ID Tubing, Includes Foot Valve, Suction & Discharge Tubing and Injection Valve #GMXa0404PVT7U000UD1130BEN	Dosing System	PVDF / PTFE / Ceramic	29 psi	---	1/2''OD x 3/8''ID	1/2''OD x 3/8''ID	TUBE

H2O Equipment List

PROJECT: Meliadine Mine WWTP

PROJECT NUMBER: U65875

PROJECT MANAGER: Alexis Morissette

DOCUMENT NUMBER: U65875-C05-0001

REVISION: 0

REVISION DATE: 2016-07-11 (YYYY-MM-DD)

Engineer	Engineer	Engineer	Engineer	Engineer	Engineer	Engineer	Engineer	Engineer	Engineer	Engineer	Engineer	Engineer	Engineer
Revision	Tag	Functional Description	Quantity	Model	Manufacturer	Item Description	Process Fluid	Wet Material Characteristics	Mechanical Characteristics	Electrical Characteristics	Inlet Connection Size (in)	Outlet Connection Size (in)	Connection Type
0	T-80500	Alkalinity Tank	1	RT SPO400UT	Dultmeier	CLOSED TOP TANK, CAPACITY OF 400 US GALLONS (1500 LITRES) 62'' Wx29''Lx66''H, DPE, LIQUID SPECIFIC GRAVITY LESS THAN 1.7. # RTSPO400UT	Dosing System	Polyethylene tank, polypropylene lid with santoprene gasket	Top Lid 16''	N/A	VARIES	VARIES	VARIES
0	STR-80520	Alkalinity Strainer	1	192.306.300	Georg Fischer	GEORGE FISHER, LINE STRAINER TYPE 306, PVC/EPDM, 20 MESH, 1/2" SPIGOT, #192.306.300	Dosing System	PVC, EPDM	---	---	0,50	0,50	Spigot
0	FQG-80513	AlkalinityCalibration Column	1	PV-2-500	Primary Fluid System	CALIBRATION COLUMN, 500 ML, PVC 1/2'' NPT, # PV -2 - 500	Dosing System	PVC	500 ml	---	0,50	0,50	F-NPT
0	P-80500 A/B	Alkalinity Dosing Pump	2	GMXa1009NPE2U000UD1130BEN	Prominent	Prominent GMXA Solenoid Diaphragm Metering Pump, 100-230 V, ±10 %, 50/60 Hz, 1/2''OD x 3/8''ID Tubing, Includes Foot Valve, Suction & Discharge Tubing and Injection Valve #GMXa1009NPE0U000UD1130BEN	Dosing System	PVC /ACRYLIC / EPDM/ PTFE/Ceramic	NA	---	1/2''OD x 3/8''ID	1/2''OD x 3/8''ID	TUBE

9.5 - VALVE LIST

H2O Valve List

PROJECT: Meliadine Mine WWTP
PROJECT NUMBER: U65875
PROJECT MANAGER: Alexis Morissette
DOCUMENT NUMBER: U65875-C20-0001
REVISION: 0
REVISION DATE: 2016-06-13 (YYYY-MM-DD)

Engineer	Engineer	Engineer	Engineer	Engineer	Engineer	Engineer	Engineer	Engineer	Engineer	Engineer	Engineer	Engineer	Engineer	Engineer	Engineer	Engineer
Reference	Revision	Tag	Functional Description	Quantity	Model	Manufacturer	Item Description	Wet Material Characteristics	Mechanical Characteristics	Electrical Characteristics	Inlet Connection Size (in)	Outlet Connection Size (in)	Connection Type	Actuation Type	Limit Switches	Positionner
U65875-C01-0110																
1	0	FV-11221	Fresh water inlet valve	1	8210G009	Asco	SOLENOID VALVE BRASS 24 VDC ASCO 3/4" , 90 PSI MAX PRESSURE #8210G009	BRASS,EPDM	90 PSI	24 VDC, 1/2NPT	0,75	0,75	F-NPT	Solenoid	No	No
2	0	HV-19299 A	Equalization Pumps System Shutoff Valve	1	1602-030	Asahi	ASAHI BALL VALVE 3", PVC, EPDM SEALS, TYPE 21, SOCKET #1602-03	PVC, EPDM	150 psi	N/A	3,00	3,00	Flange ANSI 150	Lever Handle	No	No
	0	HV-19299 B	Equalization Pumps System Shutoff Valve	1	21A030ES	Chemline	UNION BALL VALVE CHEMLINE PVC 80 3" SOCKET TYPE 21 EPDM #21A030ES	PVC, EPDM	150 psi	N/A	3,00	3,00	Socket	Lever Handle	No	No
3	0	HV-11250 A/B	Fine Screens Inlet Isolation Valve	2	21A005EC	Chemline	BALL VALVE CHEMLINE 21 SERIES, PVC, EPDM SEAL, 1/2" COMBO THREADED/SOCKET, #21A005EC	PVC, EPDM	230 psi	N/A	0,50	0,50	Socket	Lever Handle	No	No
		FV-11221A/B/C/D	Fine Screens Inlet Control Valve	4	8210G002	Asco	Included with screens	BRASS,EPDM	90 PSI	24 VDC, 1/2NPT	0,50	0,50	FNPT	Solenoid	No	No
4	0	CV-12251 A/B	Sump pump System Check Valve	2	WPA020ES-W-SPAC	Chemline	2" WAFER CHECK VALVE, PVC BODY, EPDM O-RING SEAL, COMPLETEWITH SPACER AND 316SS SPRING #WPA020ES-W-SPAC	PVC, EPDM	145 psi	N/A	2,00	2,00	Wafer	None	No	No
	0		Sump pump System Ball Valve	2	21A020EC	Chemline	BALL VALVE CHEMLINE 21 SERIES, PVC, EPDM SEAT, 2" COMBO THREADED/SOCKET, #21A020EC	PVC, EPDM	230 psi	N/A	2,00	2,00	Combo Socket Thread	Lever Handle	No	No
5	0	HV-12252 A/B	Sump pump System Ball Valve	2	2-93A66	LVC	LVC FIGURE 93 KNIFE GATE VALVE, 2", 150 PSI CWP RATING, DESIGN TO ANSI B16.5/150 DRILLING, 316SS CAST BODY/GATE, SS METAL SEAT, TLSP PACKING, HANDWHEEL OPERATOR, 2" 93A66	SS316	150 psi	N/A	2,00	2,00	Lug	Lever Handle	No	No
U65875-C01-0190																
6	0	HV-19049 A/B	EQ Tank Air Inlet	2	2-50M76	Sharpe	SHARPE BALL VALVE, 2", SERIES 50M76. PART# 2-50M76.	SS316/PTFE	1000 psi	NA	2	2	F-NPT	Lever Handle	No	No
7	0	HV-19050 A/B	EQ Tank Pumps Inlet Isolation Valve	2	4"-93A66	LVC	LVC FIGURE 93 KNIFE GATE VALVE, 4", 150 PSI CWP RATING, DESIGN TO ANSI B16.5/150 DRILLING, 316SS CAST BODY/GATE, SS METAL SEAT, TLSP PACKING, HANDWHEEL OPERATOR, 4" 93A66	SS316	150 psi	N/A	4,00	4,00	Lug	Lever Handle	No	No
8	0	HV-19060 A/B	EQ Tank Level Transmitter Valve	2	1/2-50M76	Sharpe	SHARPE BALL VALVE, 1-1/2", SERIES 50M76. # 1-1/2-50M76.	SS316/PTFE	1000 psi	N/A	0,50	0,50	F-NPT	Lever Handle	No	No
9	0	HV-19052 A/B	EQ Tank Outlet Isolation Valve	2	4"-93A66	LVC	LVC FIGURE 93 KNIFE GATE VALVE, 4", 150 PSI CWP RATING, DESIGN TO ANSI B16.5/150 DRILLING, 316SS CAST BODY/GATE, SS METAL SEAT, TLSP PACKING, HANDWHEEL OPERATOR, 4" 93A66	SS316	150 psi	N/A	4,00	4,00	Lug	Lever Handle	No	No
U65875-C01-0720																
10		IQ-80597	NaOH Chemical Injection Quill	1	Include with dosing pump	Prominent	Include with dosing pump			N/A						
	0	HV-72010	DO Inlet Valve	1	NGA005	Chemline	CHEMLINE NEEDLE VALVE NG SERIES, PVC BODY, PTFE SEAL, 1/2" NPT, #NGA005	PVC, EPDM	NA	NA	0,50	0,50	F-NPT	Lever Handle	No	No
11	0	HV-72060	Aerobic Tank Level Transmitter Valve	1	1/2-50M76	Sharpe	SHARPE BALL VALVE, 1-1/2", SERIES 50M76. # 1-1/2-50M76.	SS316/PTFE	1000 psi	N/A	0,50	0,50	F-NPT	Lever Handle	No	No
U65875-C01-0740																
12	0	FV-83798-T	Citric Acid Recovery Clean Pump Undefined	2	453994	Burkert	SOLENOID VALVE BURKERT, NORMALLY CLOSED, 1/2" NPT, PVC WITH EPDM SEAL, 24 VOLTS #0453994	PVC/EPDM	max 87 psi	24 VDC,	0,50	0,50	Socket	Solenoid	No	No
13	0	FV-83598-T	Sodium Hypo Recovery Clean Pump Undefined	2	453994	Burkert	SOLENOID VALVE BURKERT, NORMALLY CLOSED, 1/2" NPT, PVC WITH EPDM SEAL, 24 VOLTS #0453994	PVC/EPDM	max 87 psi	24 VDC,	0,50	0,50	Socket	Solenoid	No	No
14	0	IQ-83597-T	Citric Acid Recovery Clean Quill	2	Include with dosing pump	Prominent	NA	PVC, EPDM	150 psi	NA	0,5	NA	M-NPT	NA	na	na
15	0	IQ-83797-T	Sodium Hypo Recovery Clean Quill	2	Include with dosing pump	Prominent	NA	PVC, EPDM	150 psi	NA	0,5	NA	M-NPT	NA	NA	NA
16	0	FV-31026-T	UF / MF Membranes Pressure Relief Valve	2	21A010EC-QA1T010	Chemline	UNION BALL VALVE CHEMLINE PVC 80 1" COMBO TYPE 21 EPDM 21A010EC WITH ELECTRIC ACTUATOR 115 VAC, 21A010EC/QA1T010	PVC, EPDM	230 psi	120VAC	1,00	1,00	Combo Socket Thread	Electrical	NA	NA
17	0	HV-74023-T	Membrane Tank Air Inlet	2	3-93A66	LVC	LVC FIGURE 93 KNIFE GATE VALVE, 3", 150 PSI CWP RATING, DESIGN TO ANSI B16.5/150 DRILLING, 316SS CAST BODY/GATE, SS METAL SEAT, TLSP PACKING, HANDWHEEL OPERATOR, 3" 93A66	SS316	150 psi	N/A	3,00	3,00	Lug	Lever Handle	No	No
18	0	FV-74050-T	Membrane Tank Inlet Isolation Electrical Valve	2	21A030ES/QB1T30	Chemline	UNION BALL VALVE CHEMLINE WITH ELECTRIC ACTUATOR PVC 3" SOCKET TYPE 21 EPDM #21A030ES/QB1T030	PVC, EPDM	230 psi	120 VAC, 100 % DUTY	3,00	3,00	Socket	Electrical	No	No
19	0	CV-74028-T	Membrane Tank Overflow Check Valve	2	129104	Praher	4" WAFER CHECK VALVE, PVC BODY, EPDM O-RING SEAL, COMPLETE WITH 316SS SPRING, #129104	PVC, EPDM	150 psi	NA	4	4	wafer	NA	No	No
20	0	FV-79001-T	Permeat Pump CIP Inlet Electrical Valve	2	21A020EC/QA1T20	Chemline	UNION BALL VALVE CHEMLINE PVC 2" COMBO TYPE 21 EPDM WITH ELECTRIC ACTUATEUR, 120 VOLTS #21A020EC / QA1T020	PVC, EPDM	230 psi	120 VAC, 100 % DUTY	2,00	2,00	Combo Socket Thread	Electrical	No	No
21	0	FV-79002-T	Permeat Pump Filtrate CIP Inlet Electrical Valve	2	21A020EC/QA1T20	Chemline	UNION BALL VALVE CHEMLINE PVC 2" COMBO TYPE 21 EPDM WITH ELECTRIC ACTUATEUR, 120 VOLTS #21A020EC / QA1T020	PVC, EPDM	230 psi	120 VAC, 100 % DUTY	2,00	2,00	Combo Socket Thread	Electrical	No	No
22	0	CV-79051-T	MBR Permeate / Process Pumps Check Valve	2	129101	Praher	2" WAFER CHECK VALVE, PVC BODY, EPDM O-RING SEAL, COMPLETE WITH 316SS SPRING, #129101	PVC, EPDM	150 psi	N/A	2,00	2,00	Wafer	None	No	No
23	0	FV-79099-T	Permeat Pump Outlet to Membrane Electrical Valve	2	21A020EC/QA1T20	Chemline	UNION BALL VALVE CHEMLINE PVC 2" COMBO TYPE 21 EPDM WITH ELECTRIC ACTUATEUR, 120 VOLTS #21A020EC / QA1T020	PVC, EPDM	230 psi	120 VAC, 100 % DUTY	2,00	2,00	Combo Socket Thread	Electrical	No	No
24	0	FV-79098-T	Permeat Pump Filtrate Outlet to Electrical Tank Electrical Valve	2	21A020EC/QA1T20	Chemline	UNION BALL VALVE CHEMLINE PVC 2" COMBO TYPE 21 EPDM WITH ELECTRIC ACTUATEUR, 120 VOLTS #21A020EC / QA1T020	PVC, EPDM	230 psi	120 VAC, 100 % DUTY	2,00	2,00	Combo Socket Thread	Electrical	No	No
25	0	HV-79201-T	Permeate Commisionning outlet Valve	2	21A015EC	Chemline	BALL VALVE CHEMLINE 21 SERIES, PVC, EPDM SEAT, 1 1/2" COMBO THREADED/SOCKET, #21A015EC	PVC, EPDM	230 psi	N/A	1,50	1,50	Combo Socket Thread	Lever Handle	No	No
26	0	HV-79052-T	Permeate Commisionning outlet UV Valve	2	21A020EC	Chemline	BALL VALVE CHEMLINE 21 SERIES, PVC, EPDM SEAT, 2" COMBO THREADED/SOCKET, #21A020EC	PVC, EPDM	230 psi	n/a	2	2	Combo Socket Thread	Lever Handle	no	no
27	0	HV-74051-T	Membrane Tank Outlet Valve	2	2-53036-BW10	Sharpe	SHARPE BALL VALVE, 2", SERIES 5303, 316SS BODY/ENDS, BUTT WELD SCHEDULE 10. PART# 2-53036BW10.	PVC, EPDM	1000 psi , BW10	N/A	2,00	2,00	Butt-weld	Lever Handle	No	No
28	0	CV-74651-T	RAZ Pumps Check Valve	2	129101	Praher	2" WAFER CHECK VALVE, PVC BODY, EPDM O-RING SEAL, COMPLETE WITH 316SS SPRING, #129101	PVC, EPDM	150 psi	N/A	2,00	2,00	Wafer	None	No	No
29	0	HV-74629-T	Return Activated Sludge Pumps Sample Valve	2	21A010EC	Chemline	BALL VALVE CHEMLINE 21 SERIES, PVC, EPDM SEAT, 1" COMBO THREADED/SOCKET, #21A010EC	PVC, EPDM	230 psi	N/A	1,00	1,00	Combo Socket Thread	Lever Handle	No	No
30	0	HV-74652-T	Return RAZ To Aerobic Tank Valve	2	21A020EC	Chemline	BALL VALVE CHEMLINE 21 SERIES, PVC, EPDM SEAT, 2" COMBO THREADED/SOCKET, #21A020EC	PVC, EPDM	230 psi	n/a	2	2	Combo Socket Thread	Lever Handle	no	no
31	0	FV-96001-T	Return RAZ To Sludge Tank Valve	2	21A020EC/QA1T20	Chemline	UNION BALL VALVE CHEMLINE PVC 2" COMBO TYPE 21 EPDM WITH ELECTRIC ACTUATEUR, 120 VOLTS #21A020EC / QA1T020	PVC, EPDM	230 psi	120 VAC, 100 % DUTY	2,00	2,00	Combo Socket Thread	Electrical	No	No
U65875-C01-0750																
32	0	PSV-75071	Process Blowers Pressure Release or Safety Valve	1	VRL6	FPZ	BLOWER SAFETY VALVE, 2" FNPT, LOW PRESSURE/VACUUM, ALUMINUM CAST # VRL6	ALUMINUM ALLOY	152" H2O	N/A	2,00	NA	F-NPT	NA	NA	NA
33	0	CV-75051	Process Blowers Check Valve	1	CV20	FPZ	BLOWER CHECK VALVE, BRASS, 2" FNPT # CV20	BRONZE	ASME/ANSI Class None	N/A	2,00	2,00	F-NPT	NA	NA	NA
34	0	PSV-75271 A/B	Process Blowers Pressure Release or Safety Valve	2	VRL6	FPZ	BLOWER SAFETY VALVE, 2" FNPT, LOW PRESSURE/VACUUM, ALUMINUM CAST # VRL6	ALUMINUM ALLOY	152" H2O	N/A	2,00	NA	F-NPT	NA	NA	NA

H2O Valve List

PROJECT: Meliadine Mine WWTP
PROJECT NUMBER: U65875
PROJECT MANAGER: Alexis Morissette
DOCUMENT NUMBER: U65875-C20-0001
REVISION: 0
REVISION DATE: 2016-06-13
(YYYY-MM-DD)

Engineer	Engineer	Engineer	Engineer	Engineer	Engineer	Engineer	Engineer	Engineer	Engineer	Engineer	Engineer	Engineer	Engineer	Engineer	Engineer	Engineer
Reference	Revision	Tag	Functional Description	Quantity	Model	Manufacturer	Item Description	Wet Material Characteristics	Mechanical Characteristics	Electrical Characteristics	Inlet Connection Size (in)	Outlet Connection Size (in)	Connection Type	Actuation Type	Limit Switches	Positionner
35	0	CV-75251 A/B	Process Blowers Check Valve	2	CV20	FPZ	BLOWER CHECK VALVE, BRASS, 2'' FNPT # CV20	BRONZE	ASME/ANSI Class None	N/A	2,00	2,00	F-NPT	NA	NA	NA
	0	HV-75099	Process Blower valve	1	3-93A66	LVC	LVC FIGURE 93 KNIFE GATE VALVE, 3'', 150 PSI CWP RATING, DESIGN TO ANSI B16.5/150 DRILLING, 316SS CAST BODY/GATE, SS METAL SEAT, TLSP PACKING, HANDWHEEL OPERATOR, 3'' 93A66	SS316	150 psi	N/A	3,00	3,00	Lug	Lever Handle	No	No
	0	HV-75299	Process Blower valve	1	3-93A66	LVC	LVC FIGURE 93 KNIFE GATE VALVE, 3'', 150 PSI CWP RATING, DESIGN TO ANSI B16.5/150 DRILLING, 316SS CAST BODY/GATE, SS METAL SEAT, TLSP PACKING, HANDWHEEL OPERATOR, 3'' 93A66	SS316	150 psi	N/A	3,00	3,00	Lug	Lever Handle	No	No
	0	HV-75899	Process Blower valve	1	2-93A66	LVC	LVC FIGURE 93 KNIFE GATE VALVE, 2'', 150 PSI CWP RATING, DESIGN TO ANSI B16.5/150 DRILLING, 316SS CAST BODY/GATE, SS METAL SEAT, TLSP PACKING, HANDWHEEL OPERATOR, 2'' 93A66	SS316	150 psi	N/A	2,00	2,00	Lug	Lever Handle	No	No
36	0	HV-75259 A/B	Process Blowers System Bypass Valve	2	SV50M76020	Sharpe	SHARPE 50M76 SERIES BALL VALVE, 2", FNPT END CONNECTIONS, FULL PORT, 2-PCS, 1000 WOG, 316SS BODY/BALL/STEM, RTFE SEAT, LEVER HANDLE	SS316/PTFE	1000 psi	N/A	2,00	2,00	F-NPT	Lever Handle	No	No
37	0	PSV-75471 A/B	Process Blowers Pressure Release or Safety Valve	2	VRL6	FPZ	BLOWER SAFETY VALVE, 2'' FNPT, LOW PRESSURE/VACUUM, ALUMINUM CAST # VRL6	ALUMINUM ALLOY	152'' H2O	N/A	2,00	NA	F-NPT	NA	NA	NA
38	0	CV-75451 A/B	Process Blowers Check Valve	2	CV20	FPZ	BLOWER CHECK VALVE, BRASS, 2'' FNPT # CV20	BRONZE	ASME/ANSI Class None	N/A	2,00	2,00	F-NPT	NA	NA	NA
39	0	PSV-75871	Process Blowers Pressure Release or Safety Valve	1	VRL6	FPZ	BLOWER SAFETY VALVE, 2'' FNPT, LOW PRESSURE/VACUUM, ALUMINUM CAST # VRL6	ALUMINUM ALLOY	152'' H2O	N/A	2,00	NA	F-NPT	NA	NA	NA
40	0	CV-75851	Process Blowers Check Valve	1	CV20	FPZ	BLOWER CHECK VALVE, BRASS, 2'' FNPT # CV20	BRONZE	ASME/ANSI Class None	N/A	2,00	2,00	F-NPT	NA	NA	NA
U65875-C01-0790																
41	0	CV-79651 A/B	Permeat Distribution Network Check Valve	2	129101	Praher	2'' WAFER CHECK VALVE, PVC BODY, EPDM O-RING SEAL, COMPLETE WITH 316SS SPRING, #129101	PVC, EPDM	150 psi	N/A	2,00	2,00	Wafer	None	No	No
43	0	HV-79077	Permeat Sample Valve	1	21A005EC	Chemline	BALL VALVE CHEMLINE 21 SERIES, PVC, EPDM SEAL, 1/2'' COMBO THREADED/SOCKET, #21A005EC	PVC, EPDM	230 psi	N/A	0,50	0,50	Combo Socket Thread	Lever Handle	No	No
	0	HV-79289	Permeat Turbidity Meter Inlet	1	NGA005	Chemline	CHEMLINE NEEDLE VALVE NG SERIES, PVC BODY, PTFE SEAL, 1/2'' NPT, #NGA005	PVC, EPDM	NA	NA	0,50	0,50	F-NPT	Lever Handle	No	No
44	0	HV-79299	Treated Water Distribution Pumps System Shutoff Valve	1	21A020EC	Chemline	BALL VALVE CHEMLINE 21 SERIES, PVC, EPDM SEAT, 2'' COMBO THREADED/SOCKET, #21A020EC	PVC, EPDM	230 psi	n/a	2	2	Combo Socket Thread	Lever Handle	no	no
U65875-C01-0800																
45	0	HV-83701	Citric Tank System Shutoff Valve	1	161.546.352	GF	GF 1/2'' BALL VALVE, COMBO, TYPE 546 , PVC/FPM, #161.546.352	PVC, FPM	230 psi	N/A	0,50	0,50	Combo Socket Thread	Lever Handle	No	No
46	0	HV-83729	Citric Tank Drain Valve	1	LCTHE	Chemline	SAMPLE VALVE STRAITH CHEMLINE, PVC GREY, 1/4 MNPT X TUBING, #LCTHE	PVC, EPDM	150 psi	N/A	0,25	0,25	NPT	Lever Handle	No	No
47	0	HV-83712	Citric Tank Calibration Column / Eductor Inlet Valve	1	161.546.352	GF	GF 1/2'' BALL VALVE, COMBO, TYPE 546 , PVC/FPM, #161.546.352	PVC, FPM	230 psi	N/A	0,50	0,50	Combo Socket Thread	Lever Handle	No	No
48	0	HV-83715	Citric Tank Calibration Column / Eductor Outlet or Drain Valve	1	161.546.352	GF	GF 1/2'' BALL VALVE, COMBO, TYPE 546 , PVC/FPM, #161.546.352	PVC, FPM	230 psi	N/A	0,50	0,50	Combo Socket Thread	Lever Handle	No	No
49	0	HV-83750	Citric Tank Inlet Isolation Valve	1	161.546.352	GF	GF 1/2'' BALL VALVE, COMBO, TYPE 546 , PVC/FPM, #161.546.352	PVC, FPM	230 psi	N/A	0,50	0,50	Combo Socket Thread	Lever Handle	No	No
50	0	PSV-83771	Citric Tank Pressure Release or Safety Valve	1	SB12A005VU	Chemline	CHEMLINE 1/2'', SB12 SERIES, BACKPRESSURE/PRESSURE RELIEF VALVE. 5-150 PSI, PVC BODY/VITON SEALS/TRUE UNION SOCKET ENDS; PN: SB12A005VU	PVC, EPDM	150 psi	N/A	0,50	0,50	Socket	None	No	No
51	0	HV-83752	Citric Tank Outlet Isolation Valve	1	161.546.352	GF	GF 1/2'' BALL VALVE, COMBO, TYPE 546 , PVC/FPM, #161.546.352	PVC, FPM	230 psi	N/A	0,50	0,50	Combo Socket Thread	Lever Handle	No	No
52	0	HV-83753	Citric Tank Outlet Isolation Valve	1	161.546.352	GF	GF 1/2'' BALL VALVE, COMBO, TYPE 546 , PVC/FPM, #161.546.352	PVC, FPM	230 psi	N/A	0,50	0,50	Combo Socket Thread	Lever Handle	No	No
53	0	PCV-83772	Citric Tank Pressure Control / Regulating / Reducing Valve	1	SB12A005EU	Chemline	CHEMLINE 1/2'', SB12 SERIES, BACKPRESSURE/PRESSURE RELIEF VALVE. 5-150 PSI, PVC BODY, EPDM SEALS, TRUE UNION SOCKET ENDS, #SB12A005EU	PVC, Viton	150 psi	N/A	0,50	0,50	Socket	None	No	No
54	0	HV-83799	Citric Tank System Shutoff Valve	1	161.546.352	GF	GF 1/2'' BALL VALVE, COMBO, TYPE 546 , PVC/FPM, #161.546.352	PVC, FPM	230 psi	N/A	0,50	0,50	Combo Socket Thread	Lever Handle	No	No
55	0	HV-83501	NaOCL Water Distribution Pumps System Shutoff Valve	1	161.546.342	GF	GF 1/2'', VANNE À BILE TYPE 546, CONNEXION COMBO, PVC/EPDM. #161,546,342	PVC, EPDM	230 psi	N/A	0,50	0,50	Combo Socket Thread	Lever Handle	No	No
56	0	HV-83529	NaOCL Tank System Shutoff Valve	1	LCTHE	Chemline	SAMPLE VALVE STRAITH CHEMLINE, PVC GREY, 1/4 MNPT X TUBING, #LCTHE	PVC, EPDM	150 psi	N/A	0,25	0,25	NPT	Lever Handle	No	No
57	0	HV-83512	NaOCL Tank Drain Valve	1	161.546.342	GF	GF 1/2'', VANNE À BILE TYPE 546, CONNEXION COMBO, PVC/EPDM. #161,546,342	PVC, EPDM	230 psi	N/A	0,50	0,50	Combo Socket Thread	Lever Handle	No	No
58	0	HV-83515	NaOCl Tank Calibration Column / Eductor Inlet Valve	1	161.546.342	GF	GF 1/2'', VANNE À BILE TYPE 546, CONNEXION COMBO, PVC/EPDM. #161,546,342	PVC, EPDM	230 psi	N/A	0,50	0,50	Combo Socket Thread	Lever Handle	No	No
59	0	HV-83550	NaOCL Tank Calibration Column / Eductor Outlet or Drain Valve	1	161.546.342	GF	GF 1/2'', VANNE À BILE TYPE 546, CONNEXION COMBO, PVC/EPDM. #161,546,342	PVC, EPDM	230 psi	N/A	0,50	0,50	Combo Socket Thread	Lever Handle	No	No
60	0	PSV-83571	NaOCL Tank Inlet Isolation Valve	1	SB12A005EU	Chemline	CHEMLINE 1/2'', SB12 SERIES, BACKPRESSURE/PRESSURE RELIEF VALVE. 5-150 PSI, PVC BODY, EPDM SEALS, TRUE UNION SOCKET ENDS, #SB12A005EU	PVC, EPDM	150 psi	N/A	0,50	0,50	Socket	None	No	No
61	0	HV-83552	NaOCL Tank Outlet Isolation Valve	1	161.546.342	GF	GF 1/2'', VANNE À BILE TYPE 546, CONNEXION COMBO, PVC/EPDM. #161,546,342	PVC, EPDM	230 psi	N/A	0,50	0,50	Combo Socket Thread	Lever Handle	No	No
62	0	HV-83553	NaOCL Tank Outlet Isolation Valve	1	161.546.342	GF	GF 1/2'', VANNE À BILE TYPE 546, CONNEXION COMBO, PVC/EPDM. #161,546,342	PVC, EPDM	230 psi	N/A	0,50	0,50	Combo Socket Thread	Lever Handle	No	No
63	0	PCV-83572	NaOCL Tank Pressure Control / Regulating / Reducing Valve	1	SB12k005VU	Chemline	CHEMLINE 1/2'', SB12 SERIES, BACKPRESSURE/PRESSURE RELIEF VALVE. 5-150 PSI, PVDF BODY/VITON SEALS/TRUE UNION SOCKET ENDS; #SB12K005VU	PVDF,EPDM, PVC	150 psi	N/A	0,50	0,50	Socket	None	No	No
64	0	HV-83599	NaOCL Tank Outlet Isolation Valve	1	161.546.342	GF	GF 1/2'', VANNE À BILE TYPE 546, CONNEXION COMBO, PVC/EPDM. #161,546,342	PVC, EPDM	230 psi	N/A	0,50	0,50	Combo Socket Thread	Lever Handle	No	No
65	0	HV-80501	NaOHt Tank System Shutoff Valve	1	161.546.342	GF	GF 1/2'', VANNE À BILE TYPE 546, CONNEXION COMBO, PVC/EPDM. #161,546,342	PVC, EPDM	230 psi	N/A	0,50	0,50	Combo Socket Thread	Lever Handle	No	No

H2O Valve List

PROJECT:	Meliadine Mine WWTP
PROJECT NUMBER:	U65875
PROJECT MANAGER:	Alexis Morissette
DOCUMENT NUMBER:	U65875-C20-0001
REVISION:	0
REVISION DATE:	2016-06-13

(YYYY-MM-DD)

Engineer	Engineer	Engineer	Engineer	Engineer	Engineer	Engineer	Engineer	Engineer	Engineer	Engineer	Engineer	Engineer	Engineer	Engineer	Engineer	Engineer
Reference	**Revision**	**Tag**	**Functional Description**	**Quantity**	**Model**	**Manufacturer**	**Item Description**	**Wet Material Characteristics**	**Mechanical Characteristics**	**Electrical Characteristics**	**Inlet Connection Size** (in)	**Outlet Connection Size** (in)	**Connection Type**	**Actuation Type**	**Limit Switches**	**Positionner**
66	0	HV-80529	NaOH Tank Drain Valve	1	LCTHE	Chemline	SAMPLE VALVE STRAITH CHEMLINE, PVC GREY, 1/4 MNPT X TUBING, #LCTHE	PVC, EPDM	150 psi	N/A	0,25	0,25	NPT	Lever Handle	No	No
67	0	HV-80512	NaOH Tank Calibration Column / Eductor Inlet Valve	1	161.546.342	GF	GF 1/2", VANNE À BILE TYPE 546, CONNEXION COMBO, PVC/EPDM. #161,546,342	PVC, EPDM	230 psi	N/A	0,50	0,50	Combo Socket Thread	Lever Handle	No	No
68	0	HV-80515	NaOH Tank Calibration Column / Eductor Outlet or Drain Valve	1	161.546.342	GF	GF 1/2", VANNE À BILE TYPE 546, CONNEXION COMBO, PVC/EPDM. #161,546,342	PVC, EPDM	230 psi	N/A	0,50	0,50	Combo Socket Thread	Lever Handle	No	No
69	0	HV-80550 A/B	NaOH Tank Inlet Isolation Valve	2	161.546.342	GF	GF 1/2", VANNE À BILE TYPE 546, CONNEXION COMBO, PVC/EPDM. #161,546,342	PVC, EPDM	230 psi	N/A	0,50	0,50	Combo Socket Thread	Lever Handle	No	No
70	0	PSV-80571 A/B	NaOH Tank Pressure Release or Safety Valve	2	SB12k005VU	Chemline	CHEMLINE 1/2", SB12 SERIES, BACKPRESSURE/PRESSURE RELIEF VALVE. 5-150 PSI, PVDF BODY/VITON SEALS/TRUE UNION SOCKET ENDS; #SB12K005VU	PVDF,EPDM, PVC	150 psi	N/A	0,50	0,50	Socket	None	No	No
71	0	HV-80552 A/B	NaOH Tank Outlet Isolation Valve	2	161.546.342	GF	GF 1/2", VANNE À BILE TYPE 546, CONNEXION COMBO, PVC/EPDM. #161,546,342	PVC, EPDM	230 psi	N/A	0,50	0,50	Combo Socket Thread	Lever Handle	No	No
72	0	HV-80553	NaOH Tank Inlet Isolation Valve	1	161.546.342	GF	GF 1/2", VANNE À BILE TYPE 546, CONNEXION COMBO, PVC/EPDM. #161,546,342	PVC, EPDM	230 psi	N/A	0,50	0,50	Combo Socket Thread	Lever Handle	No	No
73	0	PCV-80572	NaOH Tank Pressure Control / Regulating / Reducing Valve	1	SB12k005VU	Chemline	CHEMLINE 1/2", SB12 SERIES, BACKPRESSURE/PRESSURE RELIEF VALVE. 5-150 PSI, PVDF BODY/VITON SEALS/TRUE UNION SOCKET ENDS; #SB12K005VU	PVDF,EPDM, PVC	150 psi	N/A	0,50	0,50	Socket	None	No	No
	0			8	FS005-6AS	Chemline	CHEMLINE 1/2", SOCKET , PVC SOCKET ENDS #FS005-6AS									
	0			2	FS005-6KT	Chemline	CHEMLINE 1/2", SOCKET/UNION KIT , PVC ; #FS005-6KT									
74	0	HV-80599	NaOH Tank Inlet Isolation Valve	1	161.546.342	GF	GF 1/2", VANNE À BILE TYPE 546, CONNEXION COMBO, PVC/EPDM. #161,546,342	PVC, EPDM	230 psi	N/A	0,50	0,50	Combo Socket Thread	Lever Handle	No	No
U65875-C01-0960																
75	0	HV-96049	Float switch valve	1	BFB015-HF	Chemline	CHEMLINE FLOAT VALVE, 1-1/2" NPT, HIGH FLOW, #BFB015-HF	PVC, EPDM	50 psi	NA	1,5	NA	NPT	Float Handle	No	No
76	0	HV-96052	Waste Activated Sludge Holding Tank	1	21A020EC	Chemline	BALL VALVE CHEMLINE 21 SERIES, PVC, EPDM SEAT, 2" COMBO THREADED/SOCKET, #21A020EC	PVC, EPDM	230 psi	n/a	2	2	Combo Socket Thread	Lever Handle	no	no
77	0	HV-96053	Waste Activated Sludge Holding Tank	1	21A020EC	Chemline	BALL VALVE CHEMLINE 21 SERIES, PVC, EPDM SEAT, 2" COMBO THREADED/SOCKET, #21A020EC	PVC, EPDM	230 psi	n/a	2	2	Combo Socket Thread	Lever Handle	no	no
78	0	HV-96078	Waste Activated Sludge Holding Tank Truck out Valve	1	30B04-6666RR-SE	Flow+	BALL VALVE FLOW+ 3" FNPT, SS CF8M, 1500 PSI , 30B04-6666RR-SE	SS316/PTFE	1000 psi	N/A	3,00	3,00	F-NPT	Lever Handle	No	No

9.6 - INSTRUMENT LIST

H2O Instrument List

PROJECT:	Meliadine Mine WWTP
PROJECT NUMBER:	U65875
PROJECT MANAGER:	Alexis Morissette
DOCUMENT NUMBER:	U65875-C14-0001
REVISION:	0
REVISION DATE:	2016-06-27

(YYYY-MM-DD)

Engineer	Engineer	Engineer	Engineer	Engineer	Engineer	Engineer	Engineer	Engineer	Engineer	Engineer	Engineer	Engineer	Engineer	Engineer	Engineer
Reference	**Revision**	**Tag**	**Functional Description**	**Quantity**	**Model**	**Manufacturer**	**Item Description**	**Wet Material Characteristics**	**Mechanical Characteristics**	**Electrical Characteristics**	**Inlet Connection Size** (in)	**Outlet Connection Size** (in)	**Connection Type**	**Scale Range**	**Scale Unit**
U65875-C01-110															
1	0	FIT-19274	Equalization Pumps Flowmeter	1	10D80-4LGA1RA0B5AA	Endress & Hauser	ENDRESS & HAUSER PROMAG 10D FLOWMETER, 3" FLANGE CLASS 150, 24VDC, WITH 2-LINE PUSH BUTTONS DISPLAY, 4-20 MA HART #10D80-4LGA1RA0B5AA	SS316/polyamide	-20°C	11-40VDC	3,00	3,00	Flange ANSI 150	See P&ID	m3/hr
2	0	LSL-12061	Sump Tank Level Switch Low	1	ENM10-5828813	Flygt	LEVEL SWITCH ENM10 FLYGT 20M P.N.: 5828813	PVC/ EPDM	20m Cable	N/A	N/A		N/A	-	N/A
3	0	LSH-12062	Sump Tank Level Switch High	1	ENM10-5828813	Flygt	LEVEL SWITCH ENM10 FLYGT 20M P.N.: 5828813	PVC/ EPDM	20m Cable	N/A	N/A		N/A	-	N/A
4	0	LT-12060	Sump Tank Level Transmitter	1	FMX21-CD221DGC10A-PR	Endress Hauser	ENDRESS AND HAUSER LEVEL TRANSMITTER, 4-20MA, CABLE MOUNTING SCREW, SCALE 0-20KPA, VITON, 10MCABLE, JUNCTION BOX, #ENDFMX21-CD221DGC10A+PR	SS316/VITON	10m Cable	10,5-35VDC	N/A	NA	Clamp	See P&ID	kPa
5	0	AE-11094	Post-Screening Raw Water Sump Tank pH Sensor	1	CPF81D-7LH21	Endress Hauser	ENDRESS & HAUSER DIGITAL PH PROBE, MEMOSENS FUNCTIONALITY, 0-14 (PH), FLAT MEMBRANE, 3/4" MNPT PROCESS CONNECTION, #CPF81D-7LH21	Lead free membrane glass	Flat Membrane	na	0,75	NA	M-NPT	See P&ID	pH
5	0	AE-11094	Post-Screening Raw Water Sump Tank pH Sensor Cable	1	CYK10-A201	Endress Hauser	ENDRESS & HAUSER MEMOSENS CABLE 20 METERS #CYK10-A201	CSA	N/A	N/A	N/A	NA	na	NA	N/A
6	0	PG-12254	Post-Screening Raw Water Sump Tank Pressure Gauge	1	9202833	Wika	GAUGE WIKA, 15 PSI, 2.5" DIAL, ALL STAINLESS, 1/4" NPT BOTTOM CONN., SILICONE FILLED #9202833	SS316	0-15 psi , low	N/A	0,25	NA	M-NPT	See P&ID	kPa
7	0	AIT-11094	Post-Screening Raw Water Sump Tank Transmitter	1	CM442-CAM1A1F061BAC	Endress Hauser	ENDRESS & HAUSER, TRANSMITTER MULTIPARAMETER ANALYSIS. LIQUILINE CM442, 24 VOLTS, 1 SENSOR, 2 ANALOGUE OUTPUT #CM442-CAM1A1F061B+AC	N/A	N/A	24VDC	N/A	NA	NA	See P&ID	pH
8	0	FIT-12274	Post-Screening Raw Water Sump Tank Flow Meter	1	10D50-4LGA1RA0B5AA	Endress Hauser	ENDRESS & HAUSER PROMAG 10D FLOWMETER, 2" FLANGE CLASS 150, 24 VDC, WITH 2-LINE PUSH BUTTONS DISPLAY, 4-20 MA HART #10D50-4LGA1RA0B5AA	SS316/polyamide	-20°C	11-40 VDC	2,00		Flange ANSI 150	See P&ID	m3/hr
U65875-C01-0190															
9	0	FIT-11274	Raw Water Lift Pumps Flowmeter	1	10D1H-4LGA1RA0B5AA	Endress Hauser	ENDRESS & HAUSER ELECTROMAGNETIC FLOW METER, DN100 4", POLYAMIDE NSF61 LINER, WAFER 150#, 316L ELECTRODES, 0.5%, COMPACT ALU, IP67 NEMA 4X, 1/2NPT CABLE ENTRY, 24VDC, 2 LINE WITH PUSH BUTTONS DISPLAY, 4-20MA, #10D1H-4LGA1RA0B5AA	SS316/polyamide	-20°C	11-40 VDC	4,00	4,00	Flange ANSI 150	See P&ID	m3/hr
10	0	LT-19060 A/B	Equalization Tank Pressure Transmitter	2	261GSLKBNS1-ED	ABB	PRESSURE GAUGE TRANSMITTER SERIES 2600T, MODEL 261GS, WITH HART 0-250 kPa CONNECTION 1/2" SS316	SS316/hastelloy	-50 °C	24VDC	0,50	NA	F-NPT	See P&ID	kPa
U65875-C01-0720															
11	0	LT-72060	Aerobic Tank Pressure Transmitter	1	261GSLKBNS1-ED	ABB	PRESSURE GAUGE TRANSMITTER SERIES 2600T, MODEL 261GS, WITH HART 0-250 kPa CONNECTION 1/2" SS316	SS316/hastelloy	-50 °C	24VDC	0,50	NA	F-NPT	See P&ID	kPa
	0	AE-72093	Aerobic Bioreactor Tank DO sensor chamber	1	71042404	Endress Hauser	ENDRESS & HAUSER,FLOW THROUGH ARMATURE 316L; Pg13,5, 120m, #71023415	SS316	NA	NA	6 mm	6 mm	Varies	na	na
12	0	AE-72093	Aerobic Bioreactor Tank DO sensor	1	COS22D-8A1A2B23	Endress Hauser	ENDRESS HAUSER DISSOLVED OXYGEN SENSOR, SS316, 0-20 MG/L, SUMMERSIBLE PROBE, # COS22D-8A1A2B23	SS316	N/A	NA	PG13	NA	PG13	See P&ID	mg/l
	0	AE-72093	Aerobic Bioreactor Tank DO Meter Cable	1	CYK10-A201	Endress Hauser	ENDRESS & HAUSER MEMOSENS CABLE 20 METERS #CYK10-A201	NA	N/A	CSA				-	N/A
13	0	AE-72094	Aerobic Bioreactor Tank PH Meter	1	CPF81D-7LH21	Endress Hauser	ENDRESS & HAUSER DIGITAL PH PROBE, MEMOSENS FUNCTIONALITY, 0-14 (PH), FLAT MEMBRANE, 3/4" MNPT PROCESS CONNECTION, #CPF81D-7LH21	Lead free membrane glass	Flat Membrane		0,75	1,00	NPT	See P&ID	pH/ Temp
	0	AE-72094	Aerobic Bioreactor Tank PH Meter Cable	1	CYK10-A201	Endress Hauser	ENDRESS & HAUSER MEMOSENS CABLE 20 METERS #CYK10-A201	NA	N/A	CSA				-	N/A
14	0	AIT-72094	Aerobic Bioreactor Tank DO & PH Transmitter	1	CM442-CAM2A3F061BAC	Endress Hauser	ENDRESS & HAUSER, TRANSMITTER MULTIPARAMETER ANALYSIS + MULTIVOICES LIQUILINE CM442, 2X DIGITAL SENSOR INPUT, 4 X 4-20MA OUTPUTS, 24VDC, WALL MOUNTED, #CM442-CAM2A3F061A	N/A	N/A	24VDC	NA	NA	NA	-	Varies
U65875-C01-0740															
15	0	LT-74060-T	Membrane Tank Level Transmitter	2	FMX21-CD221HGC10A-PR	Endress Hauser	ENDRESS AND HAUSER LEVEL TRANSMITTER, 4-20MA, CABLE MOUNTING SCREW, SCALE 0-100KPA, VITON, 10MCABLE, JUNCTION BOX, #ENDFMX21-CD221HGC10A+PR	SS316/viTON	10m Cable	10,5-35VDC	N/A	NA	N/A	See P&ID	kPa
16	0	PT-79045-T	MBR Permeate Pumps Pressure Transmitter	2	PMC131-C22E1A3E	Endress Hauser	ENDRESS & HAUSER PRESSURE TRANSMITTER, CERAMIC, EPDM SEALS, MEAS. RANGE: -1/-100...1BAR/0,1MPA GAUGE; SENSOR OVERLOAD LIMIT: 10BAR/1MPA, CSA APPROVED, PN: PMC131-C22E1A3E	CERAMIC/SS304	NA	Din 1/2	0,50	NA	M-NPT	See P&ID	kPa
17	0	PG-79054-T	MBR Permeate Pumps Pressure Gauge	2	9202833	Wika	GAUGE WIKA, 15 PSI, 2.5" DIAL, ALL STAINLESS, 1/4" NPT BOTTOM CONN., SILICONE FILLED #9202833	SS316	0-15 psi Low	N/A	0,25	NA	M-NPT	See P&ID	kPa
18	0	FIT-79074-T	MBR Permeate Pumps Flowmeter	2	10D50-4LGA1RA0B5AA	Endress Hauser	ENDRESS & HAUSER PROMAG 10D FLOWMETER, 2" FLANGE CLASS 150, 24 VDC, WITH 2-LINE PUSH BUTTONS DISPLAY, 4-20 MA HART #10D50-4LGA1RA0B5AA	SS316/polyamide	-20°C	11-40 VDC	2,00		Flange ANSI 150	See P&ID	m3/hr
19	0	PG-74654-T	Return Activated Sludge Pump Pressure Gauge	2	9202833	Wika	GAUGE WIKA, 15 PSI, 2.5" DIAL, ALL STAINLESS, 1/4" NPT BOTTOM CONN., SILICONE FILLED #9202833	SS316	0-15 psi , low	N/A	0,25	NA	M-NPT	See P&ID	kPa
20	0	FIT-74674-T	Return Activated Sludge Pumps Flowmeter	2	10D50-4LGA1RA0B5AA	Endress Hauser	ENDRESS & HAUSER PROMAG 10D FLOWMETER, 2" FLANGE CLASS 150, 24 VDC, WITH 2-LINE PUSH BUTTONS DISPLAY, 4-20 MA HART #10D50-4LGA1RA0B5AA	SS316/polyamide	-20°C	11-40 VDC	2,00		Flange ANSI 150	See P&ID	m3/hr
U65875-C01-0750															
21	0	PG-75054	Equalization Blowers Pressure Gauge	1	9202833	Wika	GAUGE WIKA, 15 PSI, 2.5" DIAL, ALL STAINLESS, 1/4" NPT BOTTOM CONN., SILICONE FILLED #9202833	SS316	0-15 psi , low	N/A	0,25	NA	M-NPT	See P&ID	kPa
42	0	FIT-75074	Equalization Blowers Flow Sensor	1	SD0523	IFM	COMPRESSED AIR FLOWMETER, ANALOG OUTPUT, NUMERIC DISPLAY, ON PIPING PROCESS CONNECTION. # SD0523	304S15	NA	18-30 VDC	G1	NA	G1	See P&ID	m3/hr
	0	FIT-75074	Equalization Blowers Flow Sensor Adaptor	1	E40195	IFM	IFM COMPRESSED AIR FLOWMETER PROCESS CONNECTION FITING G1 TO WELDING PIPE. SS316L. # E40195	SS316	NA	NA	G1	NA	G1	See P&ID	na
22	0	PG-75254 A/B	Process Blowers Pressure Gauge	2	9202833	Wika	GAUGE WIKA, 15 PSI, 2.5" DIAL, ALL STAINLESS, 1/4" NPT BOTTOM CONN., SILICONE FILLED #9202833	SS316	0-15 psi , low	N/A	0,25	NA	M-NPT	See P&ID	kPa
23	0	FIT-75274	Process Blowers Flow Sensor	1	SD0523	IFM	COMPRESSED AIR FLOWMETER, ANALOG OUTPUT, NUMERIC DISPLAY, ON PIPING PROCESS CONNECTION. # SD0523	304S15	NA	18-30 VDC	G1	NA	G1	See P&ID	m3/hr
	0	FIT-75274	Process Blowers Flow Sensor Adaptor	1	E40195	IFM	IFM COMPRESSED AIR FLOWMETER PROCESS CONNECTION FITING G1 TO WELDING PIPE. SS316L. # E40195	SS316	NA	NA	G1	NA	G1	See P&ID	na
24	0	PG-75454 A/B	Membrane Blowers Pressure Gauge	2	9202833	Wika	GAUGE WIKA, 15 PSI, 2.5" DIAL, ALL STAINLESS, 1/4" NPT BOTTOM CONN., SILICONE FILLED #9202833	SS316	0-15 psi	N/A	0,25	0,25	NPT	See P&ID	kPa
25	0	FIT-75474 A/B	Membrane Blowers Flow Sensor	2	SD0523	IFM	COMPRESSED AIR FLOWMETER, ANALOG OUTPUT, NUMERIC DISPLAY, ON PIPING PROCESS CONNECTION. # SD0523	SS316	0-2110m³/h	18-30VDC	G1	NA	G1	See P&ID	
	0	FIT-75474 A/B	Membrane Blowers Flow Sensor Adaptor	2	E40195	IFM	IFM COMPRESSED AIR FLOWMETER PROCESS CONNECTION FITING G1 TO WELDING PIPE. SS316L. # E40195	SS316	NA	NA	G1	NA	G1	See P&ID	na
26	0	PG-75854	Sludge Blowers Pressure Gauge	1	9202833	Wika	GAUGE WIKA, 15 PSI, 2.5" DIAL, ALL STAINLESS, 1/4" NPT BOTTOM CONN., SILICONE FILLED #9202833	SS316	0-15 psi , low	N/A	0,25	NA	M-NPT	See P&ID	kPa
	0	NA	Air Flow Sensor Cable	5	EVC003	IFM	CONTROL CABLE , CONNECTION M12, 10 METERS. # EVC003	NA	NA	M12	NA	NA	NA	NA	NA
27	0	FIT-75874	Sludge Blower Flow Sensor	1	SD2001	IFM	COMPRESSED AIR FLOWMETER, ANALOG OUTPUT, NUMERIC DISPLAY, 2" PROCESS CONNECTION, SD2001	SS316	NA	18-30VDC	2,00	2	M-NPT	See P&ID	m3/hr
U65875-C01-0790															
28	0	LT-79060	MBR Permeate Tank Level Transmitter	1	FMX21-CD221GGC10A-PR	Endress Hauser	ENDRESS AND HAUSER LEVEL TRANSMITTER, 4-20MA, CABLE MOUNTING SCREW, SCALE 0-60KPA, VITON, 10MCABLE, JUNCTION BOX, #ENDFMX21-CD221GGC10A+PR	SS316/viTON	10m Cable	10,5-35VDC	N/A	NA	N/A	See P&ID	kPa
29	0	AE-79093	UV Units PH-Meter	1	CPF81D-7LH21	Endress Hauser	ENDRESS & HAUSER DIGITAL PH PROBE, MEMOSENS FUNCTIONALITY, 0-14 (PH), FLAT MEMBRANE, 3/4" MNPT PROCESS CONNECTION, #CPF81D-7LH21	Lead free membrane glass	Flat Membrane	NA	0,75	NA	M-NPT	See P&ID	pH
29	0	AE-79093	UV Units PH-Meter Cable	1	CYK10-S101	Endress Hauser	MEMOSENS SENSORS CABLE, 33 FEET, CSA, ENDRESS AND HAUSER #CYK10-S101	CSA	N/A	N/A	NA	NA	NA	See P&ID	N/A
30	0	AIT-79093	UV Units PH Transmitter	1	CM442-CAM1A1F061BAC	Endress Hauser	ENDRESS & HAUSER, TRANSMITTER MULTIPARAMETER ANALYSIS. LIQUILINE CM442, 24 VOLTS, 1 SENSOR, 2 ANALOGUE OUTPUT #CM442-CAM1A1F061B+AC	N/A	N/A	24VDC	Na	NA	NA	See P&ID	N/A
31	0	AE-79089/ AIT-79089	UV Units Turbidity Meter with Transmitter	1	4690/11111231	ABB	ABB TURBIDIMETER ,LOW CONCENTRATION, WITH DISPLAY, 0-40 NTU, LCD LIGHT, 115 VAC, 10 METERS CABLE, WITH CALIBRATION BLOCK. PN: 4690 11111231 STD.	Glass	10 psi max	120 volts	0,50	0,50	barb	See P&ID	NTU
33	0	PG-79254	UV Units Pressure Gauge	1	9106842	Wika	GAUGE WIKA, 233.53 60 PSI, 2.5" DIAL, 1/4" NPT SS, BOTTOM MOUNT, GLYCERINE, # 9106842.	SS316	0-60 psi , low	N/A	0,25	NA	M-NPT	See P&ID	kPa

H2O Instrument List

PROJECT:	Meliadine Mine WWTP
PROJECT NUMBER:	U65875
PROJECT MANAGER:	Alexis Morissette
DOCUMENT NUMBER:	U65875-C14-0001
REVISION:	0
REVISION DATE:	2016-06-27

(YYYY-MM-DD)

Engineer	Engineer	Engineer	Engineer	Engineer	Engineer	Engineer	Engineer	Engineer	Engineer	Engineer	Engineer	Engineer	Engineer	Engineer	Engineer
Reference	**Revision**	**Tag**	**Functional Description**	**Quantity**	**Model**	**Manufacturer**	**Item Description**	**Wet Material Characteristics**	**Mechanical Characteristics**	**Electrical Characteristics**	**Inlet Connection Size** (in)	**Outlet Connection Size** (in)	**Connection Type**	**Scale Range**	**Scale Unit**
34	0	FIT-79274	UV Units Flowmeter	1	10D50-4LGA1RA0B5AA	Endress Hauser	ENDRESS & HAUSER PROMAG 10D FLOWMETER, 2" FLANGE CLASS 150, 24 VDC, WITH 2-LINE PUSH BUTTONS DISPLAY, 4-20 MA HART #10D50-4LGA1RA0B5AA	SS316/polyamide	-20°C	11-40 VDC	2,00	2,00	Flange ANSI 150	See P&ID	m3/hr
U65875-C01-0800															
35	,0	LSLL-83766	Citric Acid Tank Level Switch	1		Supplied with pump									
36	0	PG-83754	Citric Acid Tank Pressure Gauge	1	SGA005002PG-P025-60SS	Chemline	CHEMLINE SG SERIES GAUGE ISOLATOR AND PRESSURE GAUGE MOUNTED, PVC BOTTOM, TEFLON DIAPHRAGM, 1/2" CONNECTIONS, GLYCERINE FILLED, WITH PRESSURE GAUGE 0-60 PSI P025-60-SS (0-10 BAR), PN SGA005002PG-P02560SS	PVC	60 psi	N/A	0,50	NA	FNPT	See P&ID	psi,kPa
37	0	LSLL-83566	Hypochlorite Tank Level Switch	1		Supplied with pump									
38	0	PG-83554	Hypochlorite Tank Pressure Gauge	1	SGA005002PG-P025-60SS	Chemline	CHEMLINE SG SERIES GAUGE ISOLATOR AND PRESSURE GAUGE MOUNTED, PVC BOTTOM, TEFLON DIAPHRAGM, 1/2" CONNECTIONS, GLYCERINE FILLED, WITH PRESSURE GAUGE 0-60 PSI P025-60-SS (0-10 BAR), PN SGA005002PG-P02560SS	PVC	60 psi	N/A	0,50	NA	FNPT	See P&ID	psi,kPa
39	0	LSLL-80566 A/B	Alkalinity Tank Level Switch	1		Supplied with pump									
40	0	PG-80554	Alkalinity Tank Pressure Gauge	1	SGA005002PG-P025-60SS	Chemline	CHEMLINE SG SERIES GAUGE ISOLATOR AND PRESSURE GAUGE MOUNTED, PVC BOTTOM, TEFLON DIAPHRAGM, 1/2" CONNECTIONS, GLYCERINE FILLED, WITH PRESSURE GAUGE 0-60 PSI P025-60-SS (0-10 BAR), PN SGA005002PG-P02560SS	PVC	60 psi	N/A	0,50	NA	FNPT	See P&ID	psi,kPa
U65875-C01-0960															
41	0	LT-96060	Waste Activated Sludge Holding Tank Level Transmitter	1	FMX21-CD221FGC10A-PR	Endress Hauser	ENDRESS AND HAUSER LEVEL TRANSMITTER, 4-20MA, CABLE MOUNTING SCREW, SCALE 0-40KPA, VITON, 10MCABLE, JUNCTION BOX #ENDFMX21-	SS316/viTON	10m Cable	10,5-35VDC	N/A	NA	N/A	See P&ID	kPa

9.7 - SPARE PARTS LIST

PROJECT: Meliadine Waste Water

PROJECT NUMBER: U65875

PROJECT MANAGER: Alexis Morissette

DOCUMENT NUMBER: U65875-J02-0001,00

REVISION: 0

REVISION DATE: 2016-07-26

SPARE PARTS LIST

Critical Spare	Recommended Spare (2 years)	Maintenance Spare	Manufacturer	Model	Spare Description	On site Tags	Notes	On site total	Spare quanity	Genius Code	Past PO Number	Past Work Order	Currency	Per Unit H2O Cost	Critical Spare	Recommended Spare (2 years)	Maintenance Spare
			ABB		Calibration Block for Turbidity Meter	N/A	Supplied with turbidimeter kit	0	-		-	-	-				x
			ABB	261GSLKBNS1-ED	Pressure Transmitter series 2600T, 0-250kPa	LT-19060A/B LT-72060	Can work at -50°C	3	2	ABB261GSLKBNS1-ED	143491	120751	CAD	$ 450,00	x		
			Asahi	1602-030	EQ Pumps System Shutoff Valve	HV-19299A	Ordering Chemline	1	1	ASA1602-030	143492	120895	CAD	$ 232,65	x		
			ASCO	8210G002-24VDC	Fine Screen Solenoid Valve	FV-11221 A/B/C/D		4	1	ASC8210G002-24VDC	143545	120895	CAD	$ 105,60	x		
			Burkert	453994	Solenoid Valve from Citric Acid/ Hypochlorite dosing pumps	FV-83798-T FV-83598-T		2	1	BUR453994	143495	120895	CAD	$ 448,50	x		
			Chemline	21A010EC/QA1T010	1" Union Ball Valve with Electric Actuator	FV-31026-T	120 VAC	2	1	CHE21A010EC/QA1T010	00143483	120895	CAD	$ 450,26	x		
			Chemline	21A020EC/QA1T020	UNION BALL VALVE CHEMLINE PVC 2" COMBO TYPE 21 EPDM WITH ELECTRIC ACTUATO	FV-79001-T FV-79002-T FV-79099-T FV-79098-T FV-96001-T	120V, Ordered for FV-74050-T that was previously 2" so we won't need to order new ones	10	1	CHE21A020EC/QA1T020	143483	120895	CAD	$ 599,50	x		
			Chemline	21A005EC	Chemline 1/2" PVC Ball Valve	HV-11250A/B	Check if still available in Champlain	2	2	CHE21A005EC	**Champ stock**	120895	CAD	$ 19,67	x		
			Chemline	21A010EC	Chemline 1" PVC Ball Valve	HV-74629-T		2	1	CHE21A010EC	**Champ Stock**	120895	CAD	$ 22,46	x		
			Chemline	21A015EC	Chemline 1-1/2" PVC Ball Valve	HV-79201-T HV-79077		3	1	CHE21A015EC	143483	120895	CAD	$ 39,00	x		
			Chemline	21A020EC	Chemline 2" PVC Ball Valve	HV-79052-T HV-74652-T HV-79299 HV-76052 HV-96053		7	1	CHE21A020EC	143483	120895	CAD	$ 51,75	x		
			Chemline	LCTHE	Dosing Skid Sample Valves	HV-83729 HV-83529 HV-80529		3	1	CHELCTHE	143483	120793	CAD	$ 12,68	x		
			Chemline	SB12A005EU	Dosing BackPressure Valve	PSV-83571 PCV-83572 PSV-80571A/B PCV-80572	Some are PVDF on site because we had them stock in MN but PVC	2	1	CHESB12A005EU	**Champ stock**	120793	CAD	$ 146,16	x		
			Chemline	BFB015-HF	Float Switch Valve	HV-96049		1	1	CHEBFB015-HF	143483	120895	CAD	$ 422,80	x		
			Chemline	NGA005	DO Inlet/ Turbidity Meter Inlet Valves	HV-72010 HV-79289		2	1	CHENGA005	143483	120895	CAD	$ 60,90	x		
			Chemline	21A030ES/QB1T030	MBR Tank Inlet Isolation Valve	FV-74050-T		2	1	CHE21A030ES/QB1T30		120895	CAD	$ 788,40	x		
			Chemline	WPA020ES-W-SPAC	Sump pump System Check Valve	CV-12251 A/B		2	1	CHEWPA020ES-W-SPAC	143483	120895	CAD	$ 280,00	x		
			Flow+	30B04-6666RR-SE	Waste Activated Sludge Holding Tank Truck out Valve	HV-96078	Check if still available in H-N	1	1	FLO30B04-6666RR-SE	**HN Stock**	120895	CAD	$ 49,95	x		
			Flygt	ENM10-5828813	Level Switch for Sump Tank	LSH-12062 LSL-12061		2	1	FLY5828813	143475	120893	CAD	$ 266,00	x		
			FPZ	FE-231P	FPZ ELEMENT AIR FILTER FOR FILTER / SILENCER FS-231P. # FE-231P	F-75020 F-75240A/B F-75420A/B		5	5	FPZFE231P		120895	CAD	$ 68,40	x		
			FPZ	FE-19P	FPZ ELEMENT AIR FILTER FOR FILTER / SILENCER FS-19P. # FE-19P	F-75820		1	1	FPZFS-19P-150		120895	CAD	$ 24,30	x		
			Georg Fischer	161.546.342	Georg Fischer 1/2" PVC/ EPDM Ball Valve	HV-83501 HV-83512 HV-83515 HV-83550 HV-83552 HV-83502 HV-83503 HV-83513 HV-83555 HV-83553 /P	Check if still available in Champlain	16	1	GEO161.546.342	**Champ stock**	120793	CAD	$ 16,38	x		
			Georg Fischer	161.546.352	Georg Fischer 1/2" PVC/ FPM Ball Valve	HV-83701 HV-83712 HV-83715 HV-83755 HV-83752^/P HV-83753 HV-83300	Should have 8 spares shipped to Hon Nead	7	1	GEO161.546.352	**Champ stock**	120793	CAD	$ 16,38	x		
			Gorman Rupp	316A95-575V	Permeate/CIP/RAS/WAS Pump	P-74600-T P-79000-T		4	1	GOR316A95-575V	143558	120895	CAD	$ 1 685,00	x		
			IPEC	IPECBAG	Fine Screen Bags 20" x 60"	T-11800		1	8	IPECBAG	143330	120893	CAD	$ 6,50			x
			LVC	2-93A66	B16.5/150 DRILLING, 316SS CAST BODY/GATE, SS METAL SEAT, TLSP PACKING, HANDWHEEL OPERATOR, 2" 93A66	HV-12252 A/B HV-75899		3	1	LVC2-93A66	143492	120895	CAD	$ 402,00	x		
			LVC	3-93A66	LVC FIGURE 93 KNIFE GATE VALVE, 3", 150 PSI CWP RATING, DESIGN TO ANSI	HV-74023-T HV-75099 HV-75299		4	1	LVC3-93A66	143492	120895	CAD	$ 402,00	x		
			Neotech Aqua	2164-001	LIGHT KIT SPARE, LK-22 IN 22 IN SYSTEM. LP AMALGAM 185/254 nm	UV-91000-T		2	6	NEO2164-001			CAD	$ 214,00	x		
			Neotech Aqua	1959	BALLAST, ELECTRONIC, 120VAC, 50-60Hz BK-120-4W #1959	UV-91000-T		0	6	NEO1959			CAD	$ 105,00	x		
			Praher	129104	MBR Tank Overflow Check Valve	CV-74028-T		2	1	PRA129104	143494	120895	CAD	$ 184,08	x		
			Praher	129101	MBR/Process/RAS/Distribution Pumps Check Valve	CV-79051-T CV-74651-T CV-79651 A/B		6	2	PRA129101	143494	120895	CAD	$ 109,20	x		
			Prominent	7142038	Dosing Level Switch	LSLL-83766 LSLL-83566 LSLL-80566A/B	Usually Supplied with pump	4	1	PRO7142038		120793	CAD	$ 131,92	x		
			Prominent	1051118	Citric Acid Pump Maintenance Kit	N/A		0	1	PRO1051118			CAD	$ 207,39	x		
			Prominent	1051111	Hypochlorite Pump Maintenance Kit	N/A		0	1	PRO1051111			CAD	$ 207,39	x		
			Prominent	1001717	Alkalinity Pump Maintenance Kit	N/A		0	1	PRO1001717			CAD	$ 154,35	x		
			Sharpe	1/2-50M76	EQ Tank/Aerobic Tank Level Transmitters Valve	HV-19060 A/B HV-72060		3	1	SHA1/2-50M76	**Champ stock**	120895	CAD	$ 16,38	x		
			Sharpe	2-53036-BW10	MBR Tanks Outlet Valve	HV-74051-T		2	1	SHA2-53036-BW10	**Champ stock**	120895	CAD	$ 49,95	x		
			Wika	9202833	Wika 15psi/100kPa Pressure Gauge	PG-12254 PG-79054-T PG-74654-T PG-75054 PG-75254A/B PG-75454A/B PG-75854		11	1	WIK9202833	143486	120893, 120892, 120751	CAD	$ 32,25	x		
			Wika	9106842	Wika 60psi/400kPa Pressure Gauge	PG-79254		1	1	WIK9106842	143486	120751	CAD	$ 33,25	x		
			Chemline	21A030ES	Chemline 3" PVC Ball Valve	HV-19299A/B	HV-19299A is Asahi stock from MN	2	1	CHE21A030ES	143483	120895	CAD	$ 167,50	x		
			Endress Hauser	CPF81D-7LH21	pH Probe	AE-11094 AE-72094 AE-79093		3	1	ENDCPF81D-7LH21	143482	120893, 120751	USD	$ 293,25	x		
			Endress Hauser	COS22Z-A2B2	DO Sensor Maintenance Kit	N/A		0	1	ENDCOS22D-8A1A2B23	143482		USD	$ 318,17	x		
			Endress Hauser	FMX21-CD221HGC10A-PR	Level Transmitter 0-100 kPa	LT-74060-T	Can fit all level transmitter since it's the largest range	2	1	ENDFMX21-CD221HGC10A+PR	143482	120892	USD	$ 662,69	x		
			Endress Hauser	PMC131-C22E1A3E	Pressure Transmitter, -100..100 kPa	PT-79045-T		2	1	ENDPMC131-C22E1A3E	143482		USD	$ 174,62	x		
			Cole Parmer	DK05942-24	250 ml, 4pH, buffer solution,	N/A		0	2	COL-DK05942-24			USD	$ 6,19	x		
			Cole Parmer	DK05942-44	250 ml, 7pH, buffer solution,	N/A		0	2	COL-DK05942-44			USD	$ 6,19	x		
			Cole Parmer	DK05942-64	250 ml, 10pH, buffer solution,	N/A		0	2	COL-DK05942-64			USD	$ 7,74	x		
			FPZ	K08R-MD-15-3-575	Equalization Tank Blower	B-75000		2	0	FPZSCLK08R-MD-15-3-575			USD	$ 2 470,00		x	
			FPZ	K08R-MD-7.5-3-575	MBR Tank Blower	B-75400A/B		1	0	FPZSCLK08R-MD-7.5-3-575			USD	$ 2 296,45		x	
			FPZ	K04-MS-3-3-575	Sludge Tank Blower	B-75800		1	0	FPZSCLK04-MS-3-3-575	143552	120895	USD	$ 588,90		x	
			FPZ	VRL6	Blowers Safety Valve	PSV-75071 PSV-75271 A/B PSV-75471 A/B PSV-75871		6	1	FPZVRL6	143552	120895	USD	$ 135,00	x		
			FPZ	CV20	Blowers Check Valve	CV-75051 CV-75251 A/B CV-75451 A/B CV-75851		6	2	FPZCV20	143552	120895	USD	$ 60,30	x		
			LVC	4-93A66	4" Knife Gate Valve	HV-19050 A/B HV-19052 A/B		4	1	LVL4-93A66	143492	120895	USD	$ 545,38	x		
			Sharpe	2-50M76	EQ Tank Air Inlet/ Process Blower Bypasss Valves	HV-19049 A/B HV-75259 A/B		4	2	SHA2-50M76	143492	120895	USD	$ 81,44	x		

9.8 - ELECTRICAL SCHEMATICS

MELIADINE STP

CONTAINERIZED SEWAGE TREATMENT PLANT

C03 ELECTRICAL SCHEMATICS

NOTE:

THE INFORMATION, SPECIFICATIONS AND DATA SHOWN ON THIS PRINT ARE FURNISHED BY AND ARE TO REMAIN THE PROPERTY OF H $_2$O INNOVATION.

THE PURPOSE OF THIS DOCUMENT IS TO FACILITATE THE INSTALLATION, MAINTENANCE AND OPERATION OF THE EQUIPMENT REPRESENTED BY SAID PRINT. NO OTHER USE OF THIS DOCUMENT SHALL BE MADE WITHOUT EXPRESS WRITTEN CONSENT FROM H_2O INNOVATION.

NO.	DATE (Y/M/D)	REVISION	DWN BY	ENGINEER	CHK'D BY
.00	29/07/2016	INITIAL VERSION	E.R.		

h2o innovation
knowledge to share.du savoir à partager

DWG TITLE
MELIADINE STP
CONTAINERIZED SEWAGE
TREATMENT PLANT
ELECTRICAL DRAWINGS

TITLE

JOB NO
U65875

DWG NO
U65875-C03-TITLE

SHEET NO
1 OF 35

REVISION
.00

DRAWING #	DESCRIPTION 1	DESCRIPTION 2	DESCRIPTION 3	SHEET #
U65875-C03-TITLE		TITLE		1
U65875-C03-INDEX		INDEX		2
U65875-C03-LEGEND		LEGEND		3
U65875-C03-PP102-600V-01	PP-102	POWER PANEL	600VAC DISTRIBUTION	4
U65875-C03-PP102-600V-02	PP-102	POWER PANEL	600VAC DISTRIBUTION	5
U65875-C03-PP102-600V-03	PP-102	POWER PANEL	600VAC DISTRIBUTION	6
U65875-C03-PP102-600V-04	PP-102	POWER PANEL	600VAC DISTRIBUTION	7
U65875-C03-PP102-120V-01	PP-102	POWER PANEL	120VAC DISTRIBUTION	8
U65875-C03-MCP102-120V	MCP-102	MAIN CONTROL PANEL	120VAC DISTRIBUTION	9
U65875-C03-MCP102-24V	MCP-102	MAIN CONTROL PANEL	24VDC DISTRIBUTION	10
U65875-C03-MCP102-DI-01	MCP-102	MAIN CONTROL PANEL	DIGITAL INPUT	11
U65875-C03-MCP102-DI-02	MCP-102	MAIN CONTROL PANEL	DIGITAL INPUT	12
U65875-C03-MCP102-DO-01	MCP-102	MAIN CONTROL PANEL	DIGITAL OUTPUT	13
U65875-C03-MCP102-DO-02	MCP-102	MAIN CONTROL PANEL	DIGITAL OUTPUT	14
U65875-C03-MCP102-DO-03	MCP-102	MAIN CONTROL PANEL	DIGITAL OUTPUT	15
U65875-C03-MCP102-DO-04	MCP-102	MAIN CONTROL PANEL	DIGITAL OUTPUT	16
U65875-C03-MCP102-AI-01	MCP-102	MAIN CONTROL PANEL	ANALOG INPUT	17
U65875-C03-MCP102-AI-02	MCP-102	MAIN CONTROL PANEL	ANALOG INPUT	18
U65875-C03-MCP102-AI-03	MCP-102	MAIN CONTROL PANEL	ANALOG INPUT	19
U65875-C03-MCP102-AI-04	MCP-102	MAIN CONTROL PANEL	ANALOG INPUT	20
U65875-C03-MCP102-AI-05	MCP-102	MAIN CONTROL PANEL	ANALOG INPUT	21
U65875-C03-MCP102-AI-06	MCP-102	MAIN CONTROL PANEL	ANALOG INPUT	22
U65875-C03-MCP102-AO-01	MCP-102	MAIN CONTROL PANEL	ANALOG OUTPUT	23
U65875-C03-MCP102-AO-02	MCP-102	MAIN CONTROL PANEL	ANALOG OUTPUT	24
U65875-C03-MCP102-DOSING	JB-CHEM2	DOSING PUMPS	JUNCTION BOX	25
U65875-C03-MCP102-ES	MCP-102	MAIN CONTROL PANEL	EMERGENCY STOP	26
U65875-C03-RIO101-120V	RIO-101	REMOTE I/O PANEL	120VAC DISTRIBUTION	27
U65875-C03-RIO101-24V	RIO-101	REMOTE I/O PANEL	24VDC DISTRIBUTION	28
U65875-C03-RIO101-DI-01	RIO-101	REMOTE I/O PANEL	DIGITAL INPUT	29
U65875-C03-RIO101-DO-01	RIO-101	REMOTE I/O PANEL	DIGITAL OUTPUT	30
U65875-C03-RIO101-DO-02	RIO-101	REMOTE I/O PANEL	DIGITAL OUTPUT	31
U65875-C03-RIO101-AI-01	RIO-101	REMOTE I/O PANEL	ANALOG INPUT	32
U65875-C03-RIO101-AI-02	RIO-101	REMOTE I/O PANEL	ANALOG INPUT	33
U65875-C03-RIO101-AO-01	RIO-101	REMOTE I/O PANEL	ANALOG OUTPUT	34
U65875-C03-RIO101-DOSING	JB-CHEM1	DOSING PUMP	JUNCTION BOX	35

NOTE:

THE INFORMATION, SPECIFICATIONS AND DATA SHOWN ON THIS PRINT ARE FURNISHED BY AND ARE TO REMAIN THE PROPERTY OF H_2O INNOVATION.

THE PURPOSE OF THIS DOCUMENT IS TO FACILITATE THE INSTALLATION, MAINTENANCE AND OPERATION OF THE EQUIPMENT REPRESENTED BY SAID PRINT. NO OTHER USE OF THIS DOCUMENT SHALL BE MADE WITHOUT EXPRESS WRITTEN CONSENT FROM H_2O INNOVATION.

NO.	DATE (dd/mm/yy)	REVISION	DWN BY	ENGINEER	CHK'D BY
.00	29/07/2016	INITIAL VERSION	E.R.		

h2o innovation
knowledge to share as always a privilege

DWG TITLE
MELIADINE STP
CONTAINERIZED SEWAGE TREATMENT PLANT
ELECTRICAL DRAWINGS

INDEX

JOB NO: U65875

DWG NO: U65875-C03-INDEX

SHEET NO: 2 OF 35

REVISION: .00

WIRE & CONNECTION

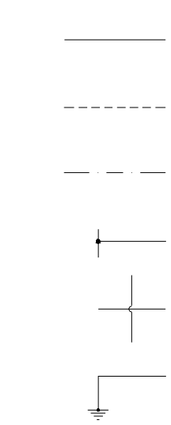

WIRE-INTERNAL TO PANEL

WIRE-EXTERNAL TO PANEL (CONTAINER WIRING)

WIRE-EXTERNAL TO PANEL (FIELD WIRING)

INTERSECTING WIRES JOINING

INTERSECTING WIRES NOT JOINING

CONNECTION TO GROUNG

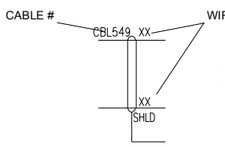

PAIR SHIELD CABLE

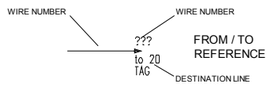

FROM / TO REFERENCE

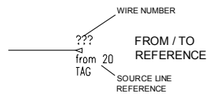

FROM / TO REFERENCE

CONTROL SWITCH

PUSH BUTTON

DOOR SWITCH NORMALLY CLOSE

TERMINAL BLOCK

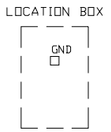

LOCATION BOX WITH TERMINAL BLOCK

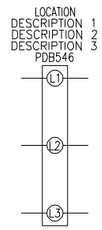

THREE POLE POWER DISTRIBUTION BLOCK

GROUND LUG

RECEPTACLE

PLUG

TERMINAL BLOCK

TERMINAL JUMPER

CIRCUIT PROTECTION

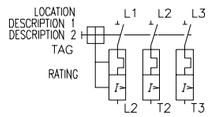

MANUAL MOTOR STARTER

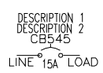

CIRCUIT BREAKER

FUSE SWITCH TERMINAL

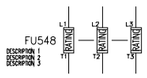

THREE POLE POWER FUSE

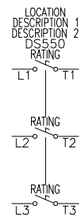

THREE POLE DISCONNECT SWITCH

MISC ACCESSORY

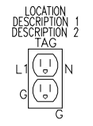

120VAC OUTLET

LED LIGHT

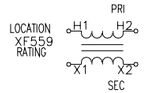

CONTROL TRANSFORMER

CONTROL CONTACT

NORMALLY OPEN LEVEL SWITCH

NORMALLY CLOSED TEMPERATURE SWITCH

NORMALLY OPEN CONTACT RELAY

NORMALLY CLOSED CONTACT RELAY

WIRE COLOR

24 VDC (+) = BLUE
24 VDC (-) = WHITE/BLUE
120 VAC = BLACK
240VAC = RED
NEUTRAL = WHITE
GROUND = GREEN
ANALOG SIGNAL = +WHITE / -BLACK

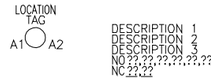

COIL RELAY OR CONTACTOR

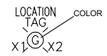

PILOT LIGHT

NOTE:

THE INFORMATION, SPECIFICATIONS AND DATA SHOWN ON THIS PRINT ARE FURNISHED BY AND ARE TO REMAIN THE PROPERTY OF H_2O INNOVATION.

THE PURPOSE OF THIS DOCUMENT IS TO FACILITATE THE INSTALLATION, MAINTENANCE AND OPERATION OF THE EQUIPMENT REPRESENTED BY SAID PRINT. NO OTHER USE OF THIS DOCUMENT SHALL BE MADE WITHOUT EXPRESS WRITTEN CONSENT FROM H_2O INNOVATION.

NO.	DATE	REVISION	DWN BY	ENGINEER	CHK'D BY
.00	29/07/2016	INITIAL VERSION	E.R.		

h2o innovation
knowledge to share du savoir à partager

DWG TITLE
MELIADINE STP
CONTAINERIZED SEWAGE
TREATMENT PLANT
ELECTRICAL DRAWINGS

LEGEND

JOB NO
U65875

DWG NO
U65875-C03-LEGEND

SHEET NO
3 OF 35

REVISION
.00

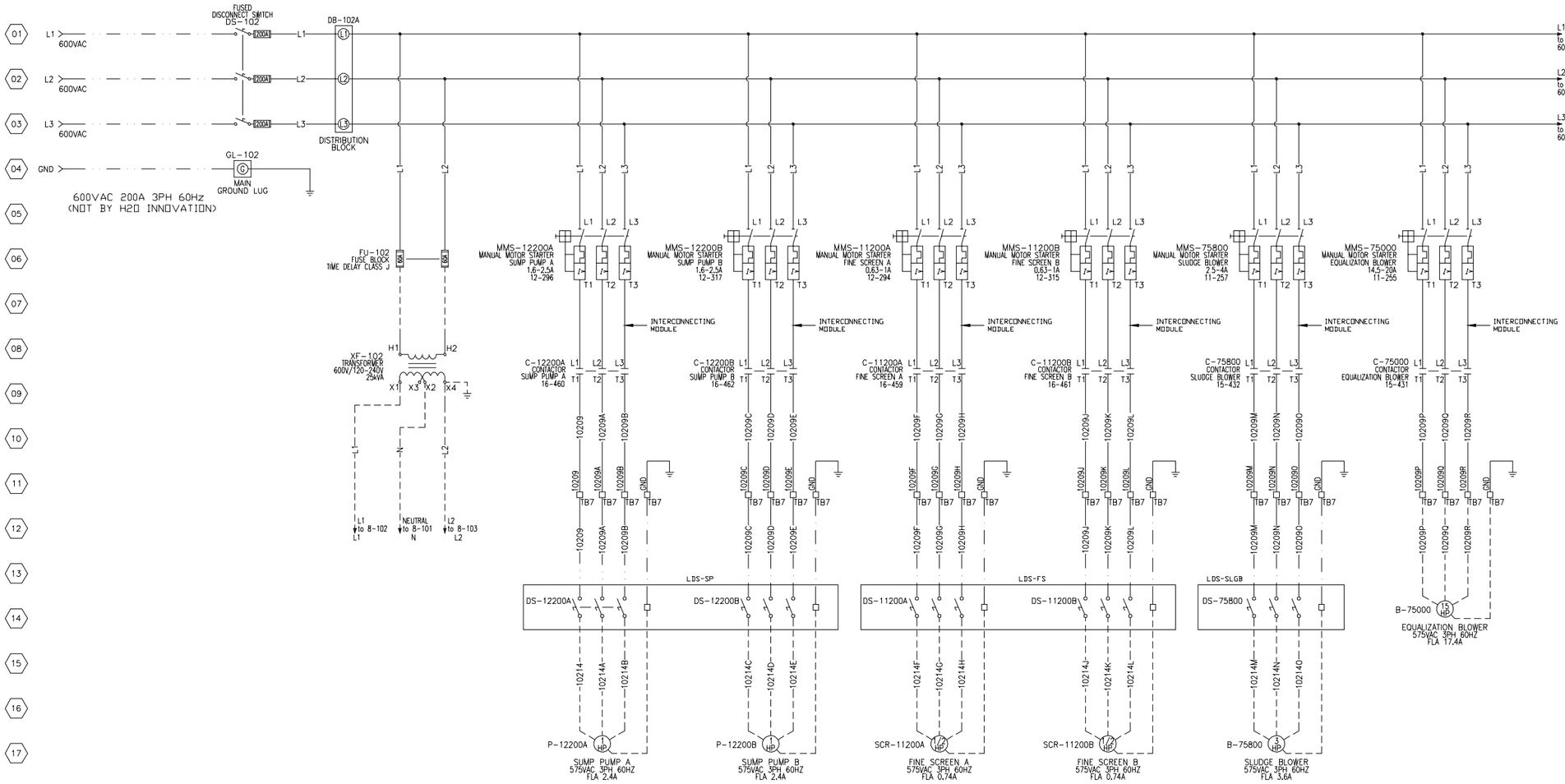

NOTE:

THE INFORMATION, SPECIFICATIONS AND DATA SHOWN ON THIS PRINT ARE FURNISHED BY AND ARE TO REMAIN THE PROPERTY OF H_2O INNOVATION.

THE PURPOSE OF THIS DOCUMENT IS TO FACILITATE THE INSTALLATION, MAINTENANCE AND OPERATION OF THE EQUIPMENT REPRESENTED BY SAID PRINT. NO OTHER USE OF THIS DOCUMENT SHALL BE MADE WITHOUT EXPRESS WRITTEN CONSENT FROM H_2O INNOVATION.

NO.	DATE	REVISION	DWN BY	ENGINEER	CHK'D BY
.00	29/07/2016	INITIAL VERSION	E.R.		

h2o innovation
knowledge to share du savoir à partager

DWG TITLE

MELIADINE STP
CONTAINERIZED SEWAGE
TREATMENT PLANT
ELECTRICAL DRAWINGS

PP-102
POWER PANEL
600VAC DISTRIBUTION

JOB NO
U65875

DWG NO
U65875-C03-PP102-600V-01

SHEET NO
4 OF 35

REVISION
.00

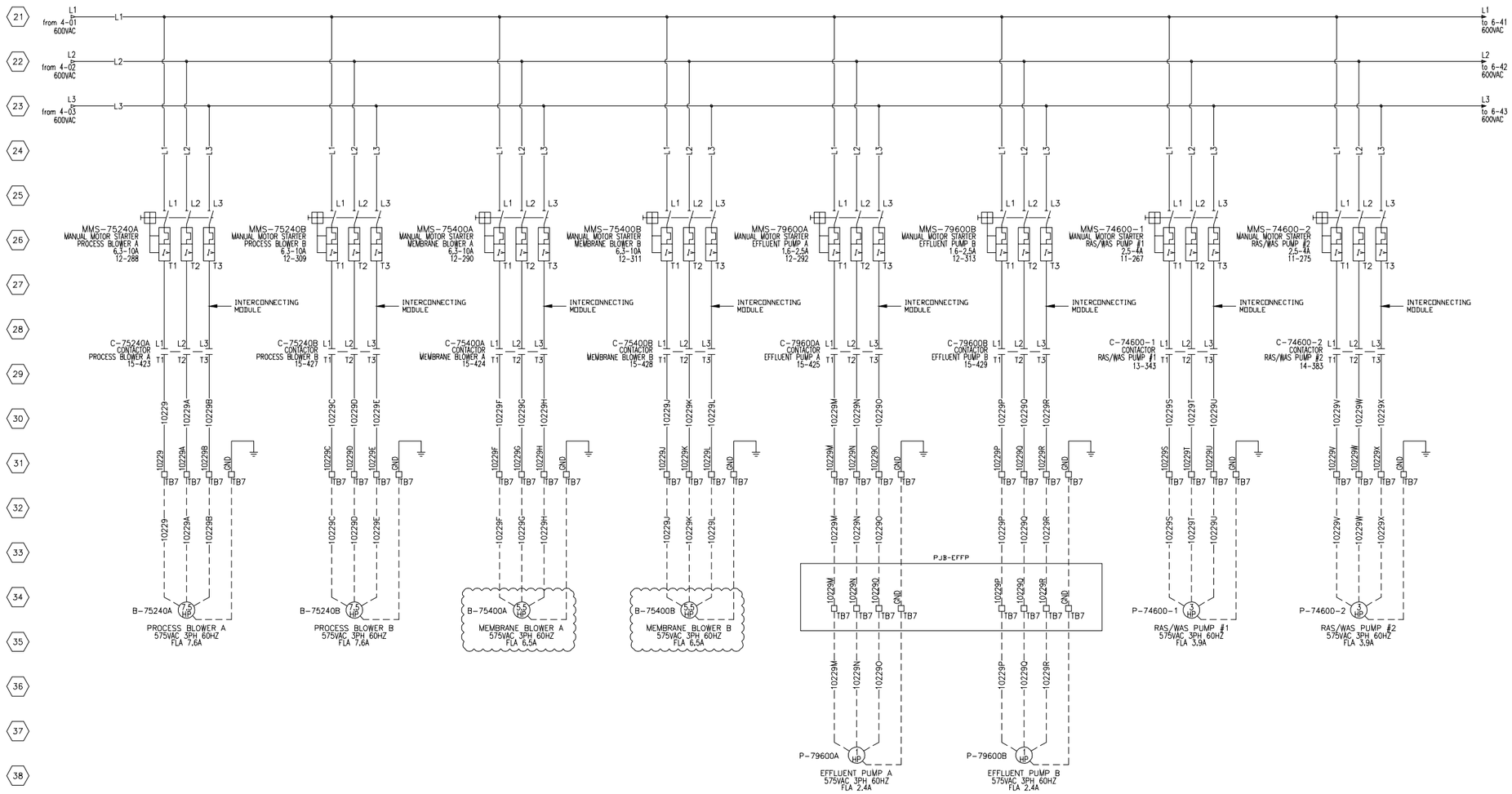

NOTE:

THE INFORMATION, SPECIFICATIONS AND DATA SHOWN ON THIS PRINT ARE FURNISHED BY AND ARE TO REMAIN THE PROPERTY OF H_2O INNOVATION.

THE PURPOSE OF THIS DOCUMENT IS TO FACILITATE THE INSTALLATION, MAINTENANCE AND OPERATION OF THE EQUIPMENT REPRESENTED BY SAID PRINT. NO OTHER USE OF THIS DOCUMENT SHALL BE MADE WITHOUT EXPRESS WRITTEN CONSENT FROM H_2O INNOVATION.

NO.	DATE (DD/MM/YYYY)		DWN BY	ENGINEER	CHK'D BY
.00	29/07/2016	INITIAL VERSION	E.R.		
		REVISION			

h2o innovation
knowledge to share du savoir à partager

DWG TITLE

MELIADINE STP
CONTAINERIZED SEWAGE TREATMENT PLANT
ELECTRICAL DRAWINGS

PP-102
POWER PANEL
600VAC DISTRIBUTION

JOB NO: U65875

DWG NO: U65875-C03-PP102-600V-02

SHEET NO: 5 OF 35

REVISION: .00

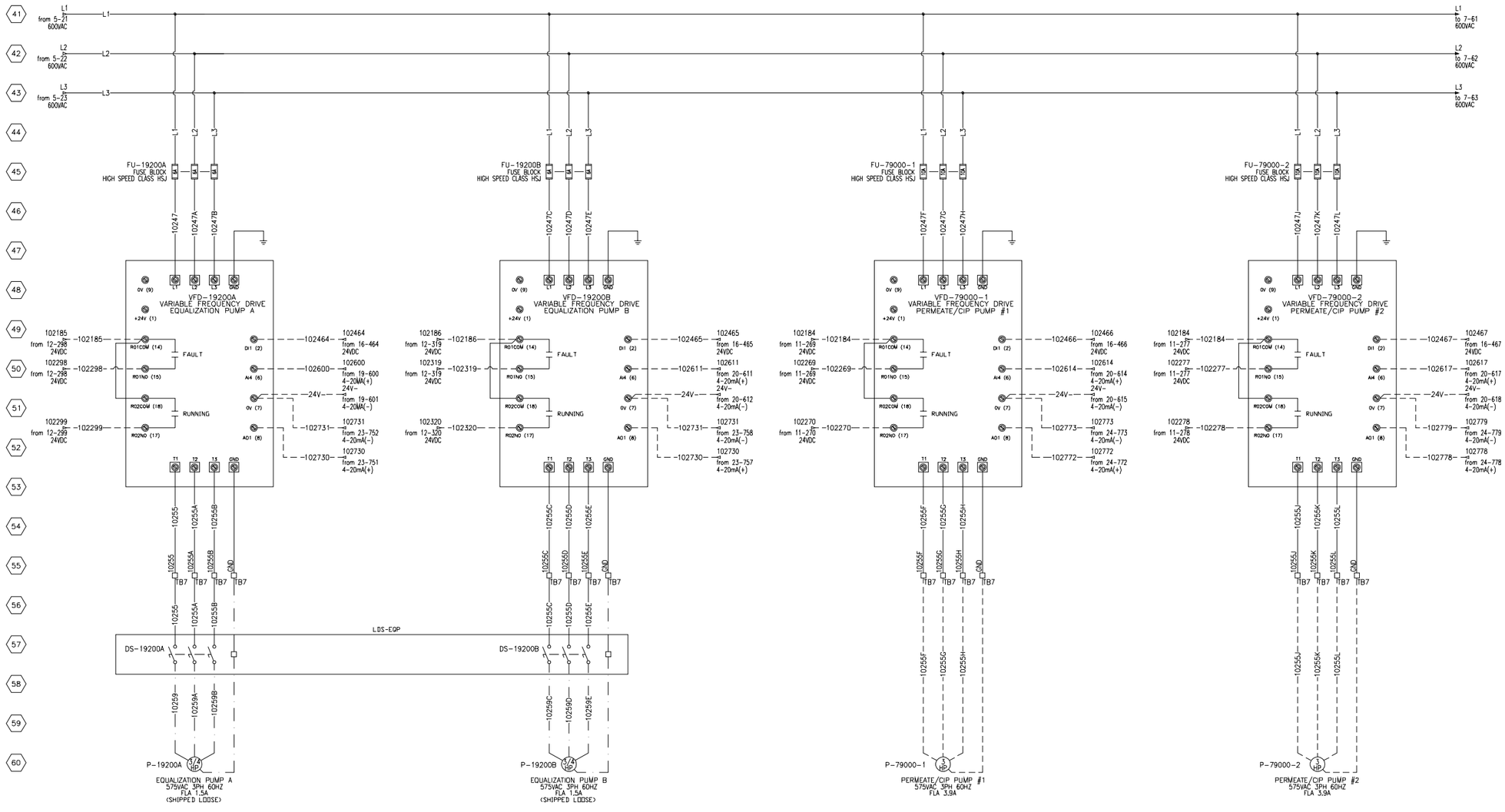

NOTE:

THE INFORMATION, SPECIFICATIONS AND DATA SHOWN ON THIS PRINT ARE FURNISHED BY AND ARE TO REMAIN THE PROPERTY OF H_2O INNOVATION.

THE PURPOSE OF THIS DOCUMENT IS TO FACILITATE THE INSTALLATION, MAINTENANCE AND OPERATION OF THE EQUIPMENT REPRESENTED BY SAID PRINT. NO OTHER USE OF THIS DOCUMENT SHALL BE MADE WITHOUT EXPRESS WRITTEN CONSENT FROM H_2O INNOVATION.

NO.	DATE	REVISION	DWN BY	ENGINEER	CHK'D BY
.00	29/07/2016	INITIAL VERSION	E.R.		

h2o innovation
knowledge to share.ou savoir à partager

DWG TITLE

MELIADINE STP
CONTAINERIZED SEWAGE
TREATMENT PLANT
ELECTRICAL DRAWINGS

PP-102
POWER PANEL
600VAC DISTRIBUTION

JOB NO
U65875

DWG NO
U65875-C03-PP102-600V-03

SHEET NO
6 OF 35

REVISION
.00

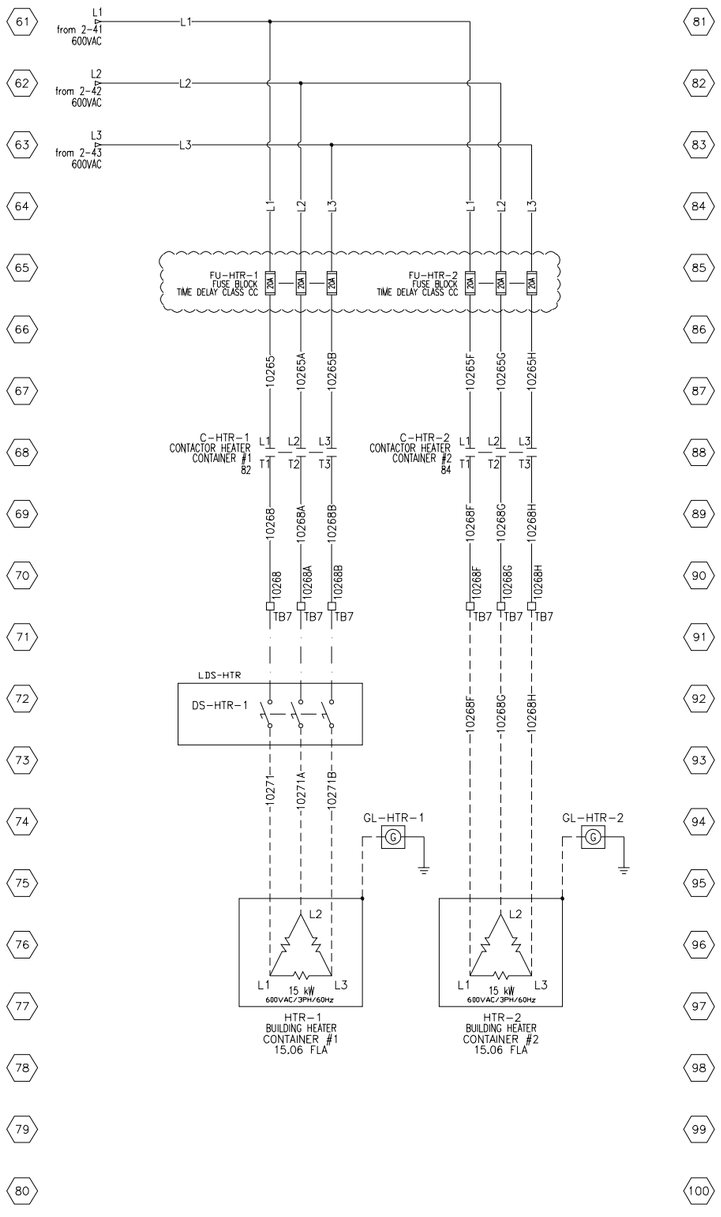

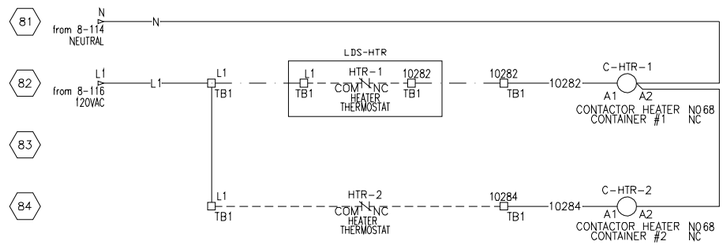

NOTE:

THE INFORMATION, SPECIFICATIONS AND DATA SHOWN ON THIS PRINT ARE FURNISHED BY AND ARE TO REMAIN THE PROPERTY OF H_2O INNOVATION.

THE PURPOSE OF THIS DOCUMENT IS TO FACILITATE THE INSTALLATION, MAINTENANCE AND OPERATION OF THE EQUIPMENT REPRESENTED BY SAID PRINT. NO OTHER USE OF THIS DOCUMENT SHALL BE MADE WITHOUT EXPRESS WRITTEN CONSENT FROM H_2O INNOVATION.

NO.	DATE		DWN BY	ENGINEER	CHK'D BY
.00	29/07/2016	INITIAL VERSION	E.R.		

h2o innovation
knowledge to share du savoir à partager

DWG TITLE

MELIADINE STP
CONTAINERIZED SEWAGE
TREATMENT PLANT
ELECTRICAL DRAWINGS

PP-102
POWER PANEL
600VAC DISTRIBUTION

JOB NO
U65875

DWG NO
U65875-C03-PP102-600V-04

SHEET NO
7 OF 35

REVISION
.00

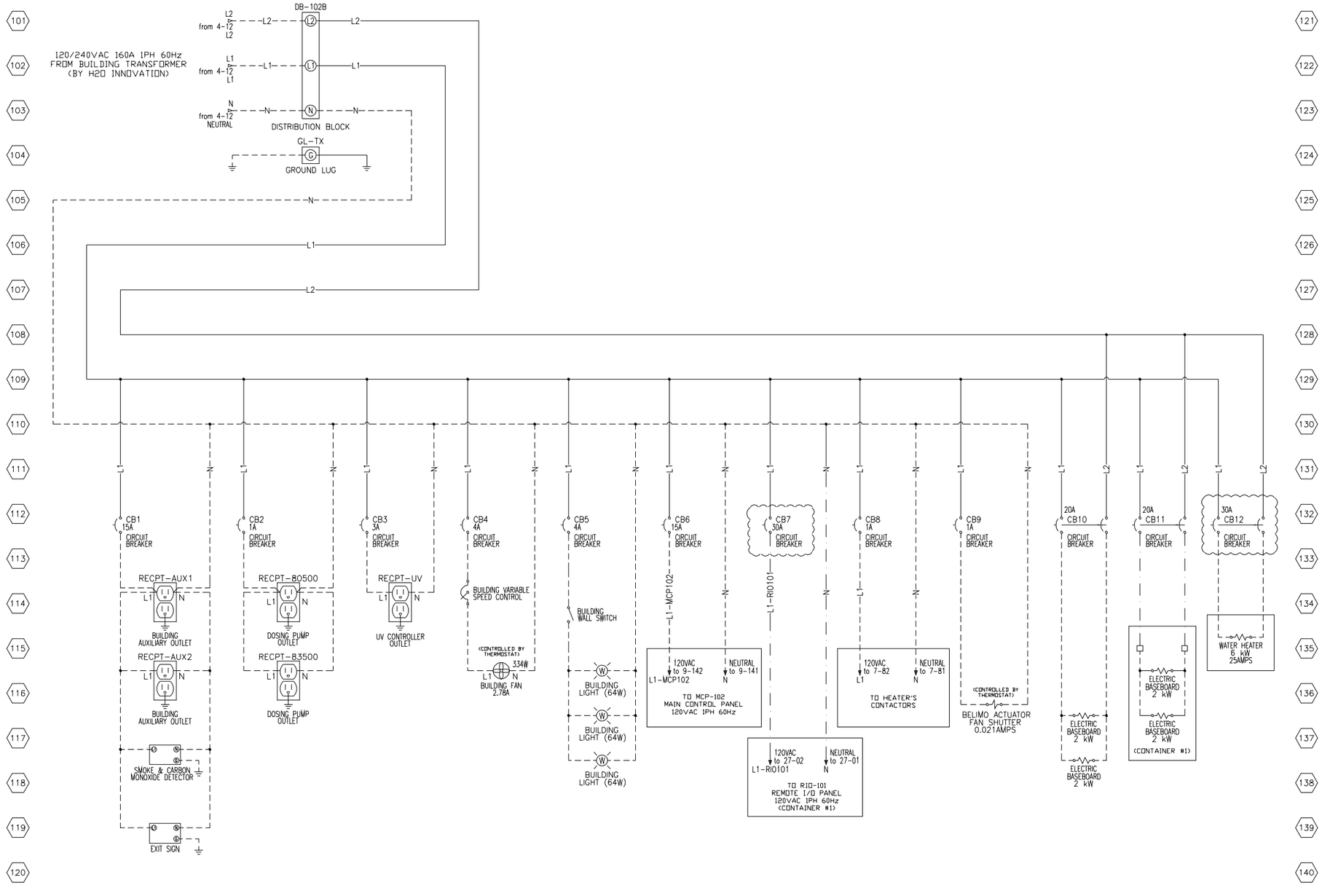

NOTE:

THE INFORMATION, SPECIFICATIONS AND DATA SHOWN ON THIS PRINT ARE FURNISHED BY AND ARE TO REMAIN THE PROPERTY OF H_2O INNOVATION.

THE PURPOSE OF THIS DOCUMENT IS TO FACILITATE THE INSTALLATION, MAINTENANCE AND OPERATION OF THE EQUIPMENT REPRESENTED BY SAID PRINT. NO OTHER USE OF THIS DOCUMENT SHALL BE MADE WITHOUT EXPRESS WRITTEN CONSENT FROM H_2O INNOVATION.

NO.	DATE	REVISION	DWN BY	ENGINEER	CHK'D BY
.00	29/07/2016	INITIAL VERSION	E.R.		

h2o innovation
knowledge to share du savoir à partager

DWG TITLE

MELIADINE STP
CONTAINERIZED SEWAGE
TREATMENT PLANT
ELECTRICAL DRAWINGS

PP-102
POWER PANEL
120VAC DISTRIBUTION

JOB NO
U65875

DWG NO
U65875-C03-PP102-120V-01

SHEET NO
8 OF 35

REVISION
.00

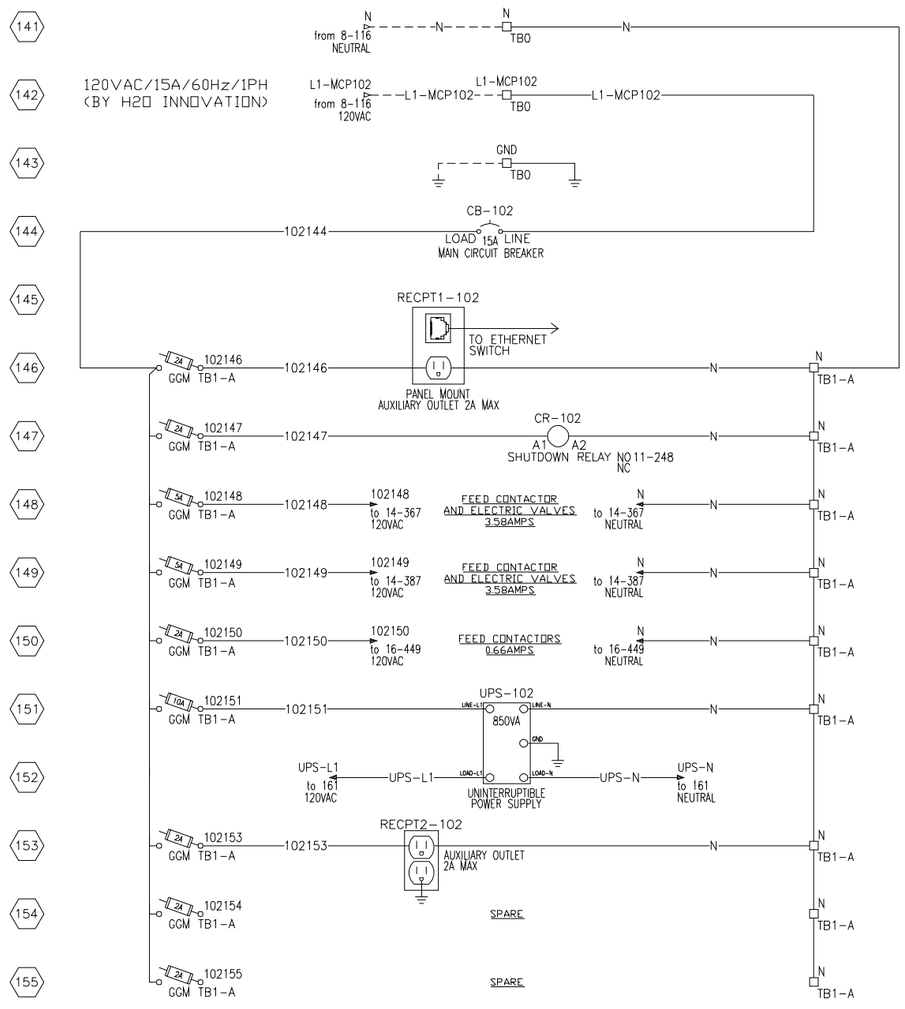

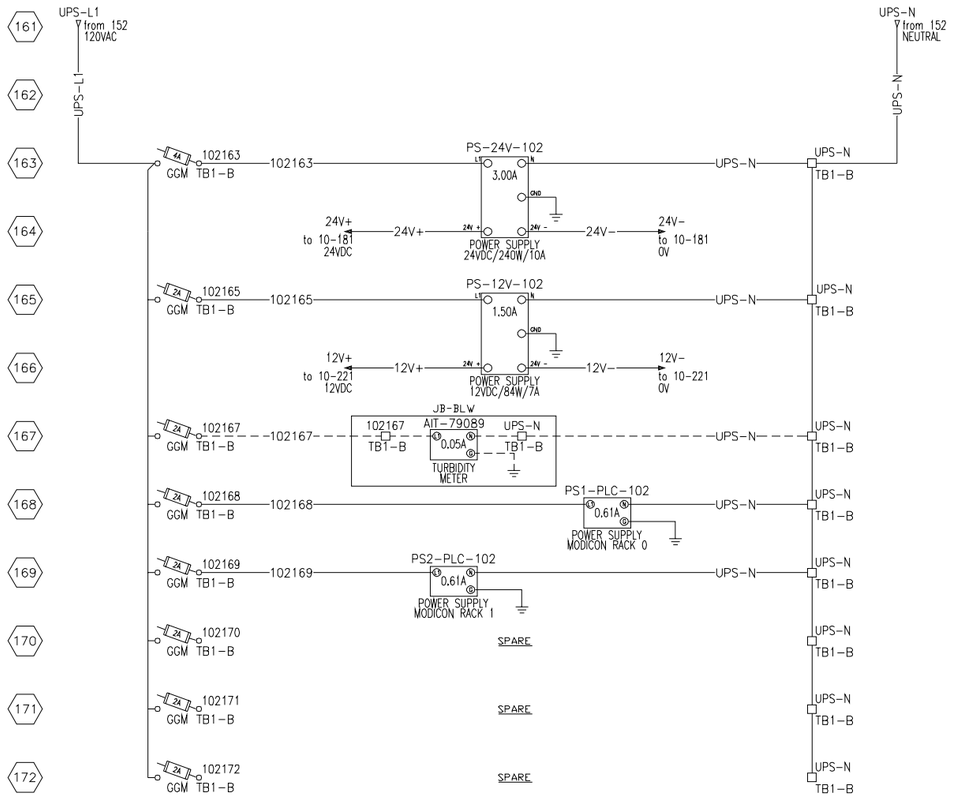

NOTE:

THE INFORMATION, SPECIFICATIONS AND DATA SHOWN ON THIS PRINT ARE FURNISHED BY AND ARE TO REMAIN THE PROPERTY OF H_2O INNOVATION.

THE PURPOSE OF THIS DOCUMENT IS TO FACILITATE THE INSTALLATION, MAINTENANCE AND OPERATION OF THE EQUIPMENT REPRESENTED BY SAID PRINT. NO OTHER USE OF THIS DOCUMENT SHALL BE MADE WITHOUT EXPRESS WRITTEN CONSENT FROM H_2O INNOVATION.

NO.	DATE	REVISION	DWN BY	ENGINEER	CHK'D BY
.00	29/07/2016	INITIAL VERSION	E.R.		

h2o innovation
knowledge to share du savoir à partager

DWG TITLE
MELIADINE STP
CONTAINERIZED SEWAGE
TREATMENT PLANT
ELECTRICAL DRAWINGS

MCP-102
MAIN CONTROL PANEL
120VAC DISTRIBUTION

JOB NO
U65875

DWG NO
U65875-C03-MCP102-120V

SHEET NO
9 OF 35

REVISION
.00

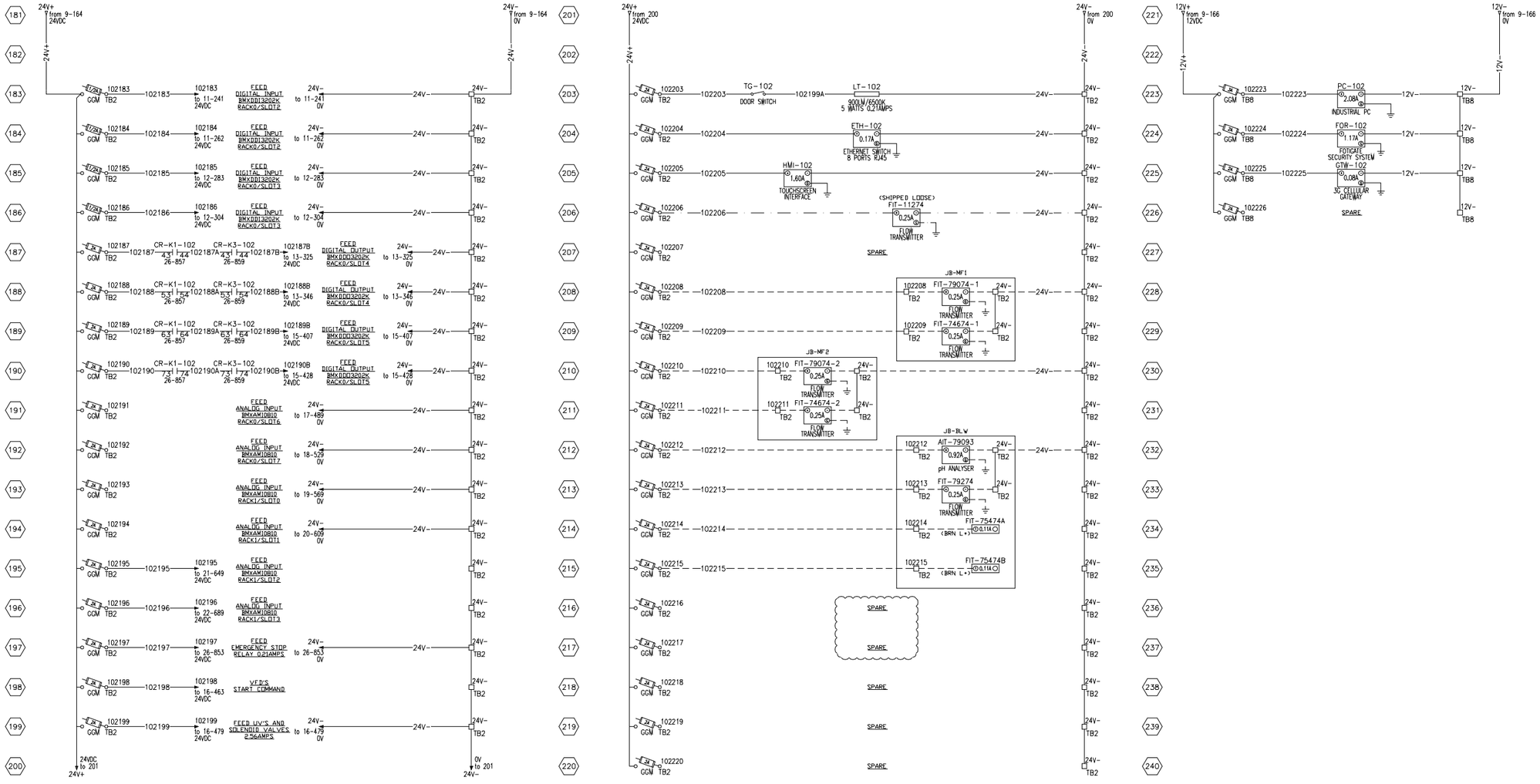

NOTE:

THE INFORMATION, SPECIFICATIONS AND DATA SHOWN ON THIS PRINT ARE FURNISHED BY AND ARE TO REMAIN THE PROPERTY OF H_2O INNOVATION.

THE PURPOSE OF THIS DOCUMENT IS TO FACILITATE THE INSTALLATION, MAINTENANCE AND OPERATION OF THE EQUIPMENT REPRESENTED BY SAID PRINT. NO OTHER USE OF THIS DOCUMENT SHALL BE MADE WITHOUT EXPRESS WRITTEN CONSENT FROM H_2O INNOVATION.

NO.	DATE	REVISION	DWN BY	ENGINEER	CHK'D BY
.00	29/07/2016	INITIAL VERSION	E.R.		

h2o innovation
knowledge to share du savoir à partager

DWG TITLE

MELIADINE STP
CONTAINERIZED SEWAGE TREATMENT PLANT
ELECTRICAL DRAWINGS

MCP-102
MAIN CONTROL PANEL
24VDC DISTRIBUTION

JOB NO: U65875

DWG NO: U65875-C03-MCP102-24V

SHEET NO: 10 OF 35

REVISION: .00

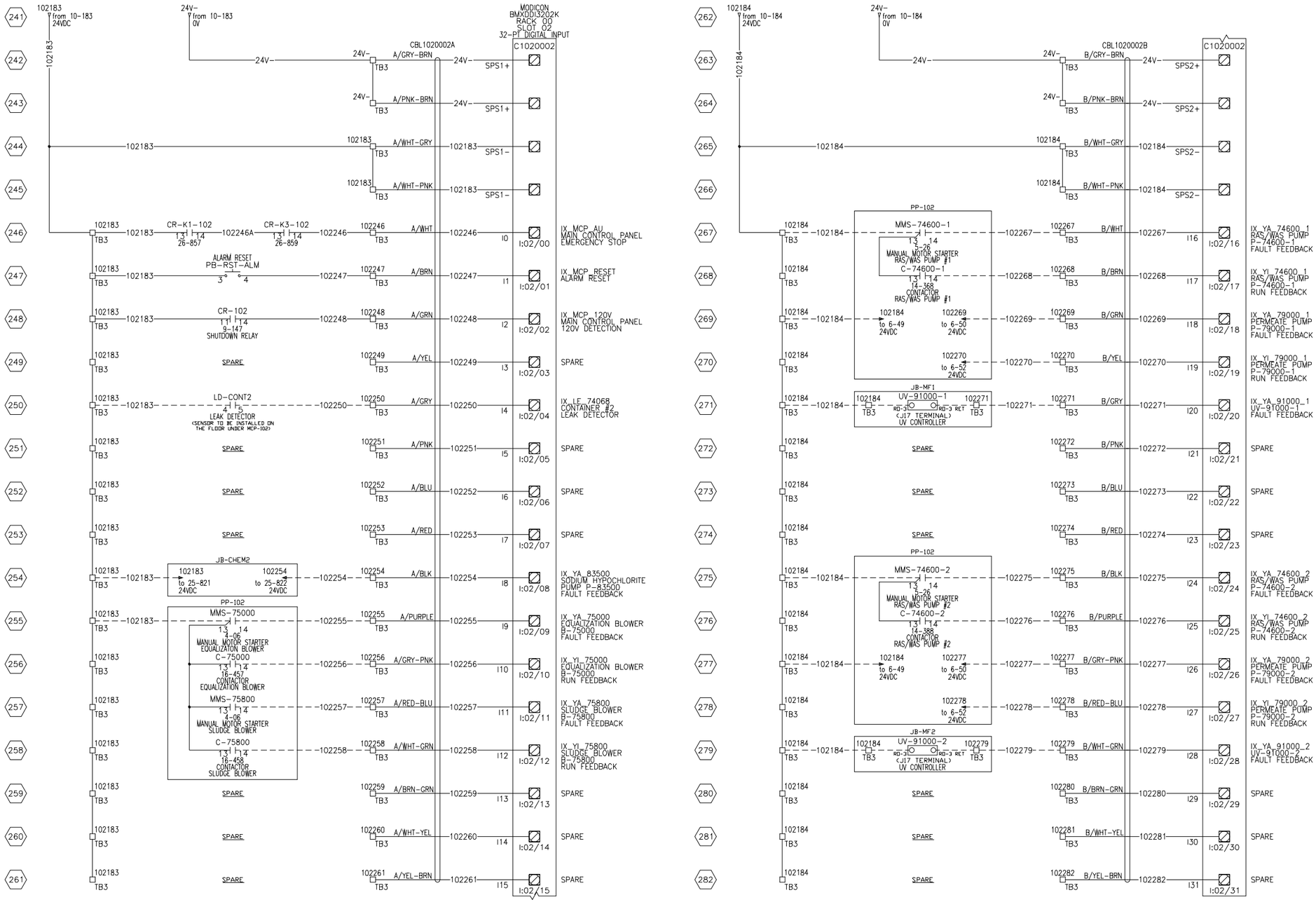

NOTE:

THE INFORMATION, SPECIFICATIONS AND DATA SHOWN ON THIS PRINT ARE FURNISHED BY AND ARE TO REMAIN THE PROPERTY OF H_2O INNOVATION.

THE PURPOSE OF THIS DOCUMENT IS TO FACILITATE THE INSTALLATION, MAINTENANCE AND OPERATION OF THE EQUIPMENT REPRESENTED BY SAID PRINT. NO OTHER USE OF THIS DOCUMENT SHALL BE MADE WITHOUT EXPRESS WRITTEN CONSENT FROM H_2O INNOVATION.

NO.	DATE	REVISION	DWN BY	ENGINEER	CHK'D BY
.00	29/07/2016	INITIAL VERSION	E.R.		

h2o innovation
knowledge to share.du savoir à partager

DWG TITLE
MELIADINE STP
CONTAINERIZED SEWAGE
TREATMENT PLANT
ELECTRICAL DRAWINGS

MCP-102
MAIN CONTROL PANEL
DIGITAL INPUT

JOB NO
U65875

DWG NO
U65875-C03-MCP102-DI-01

SHEET NO
11 OF 35

REVISION
.00

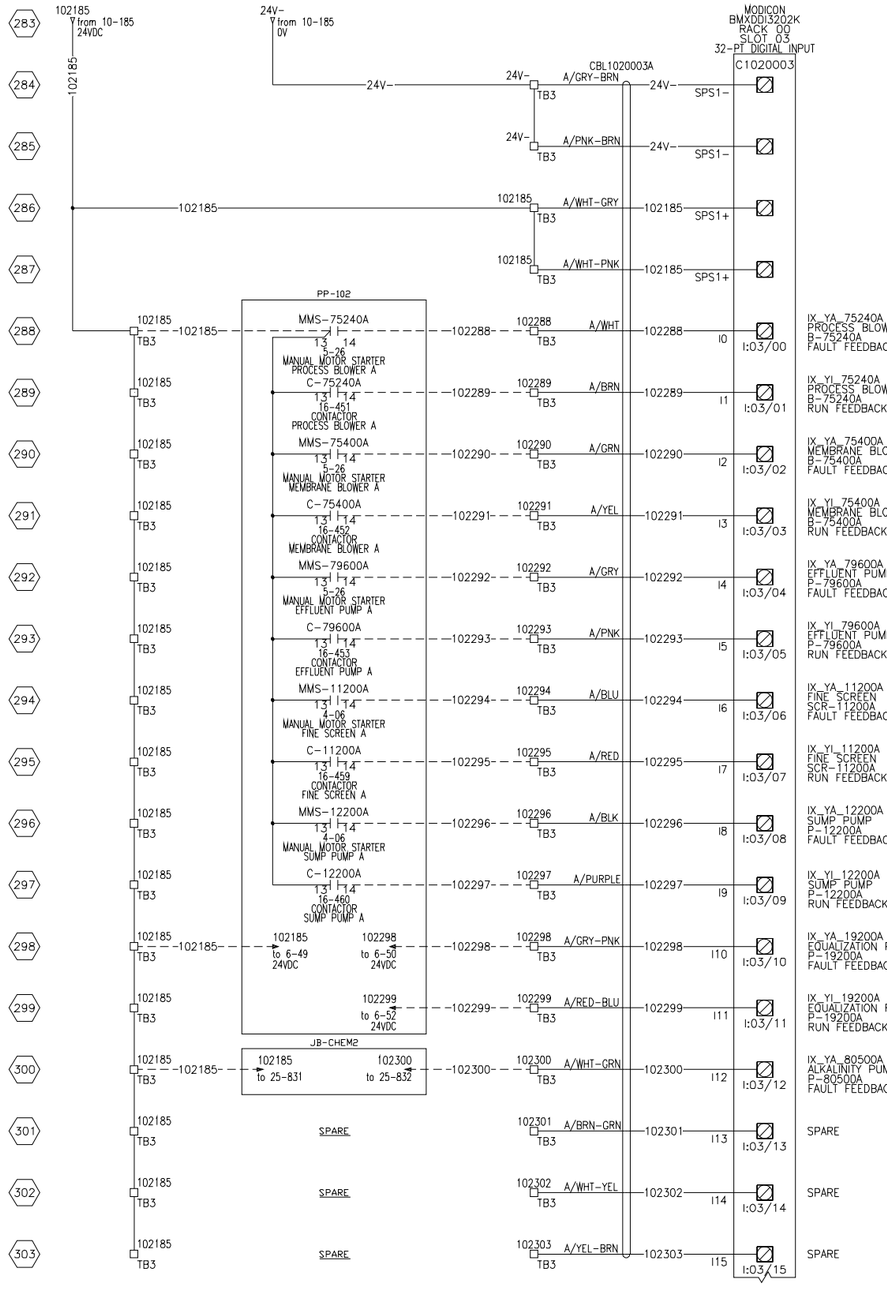

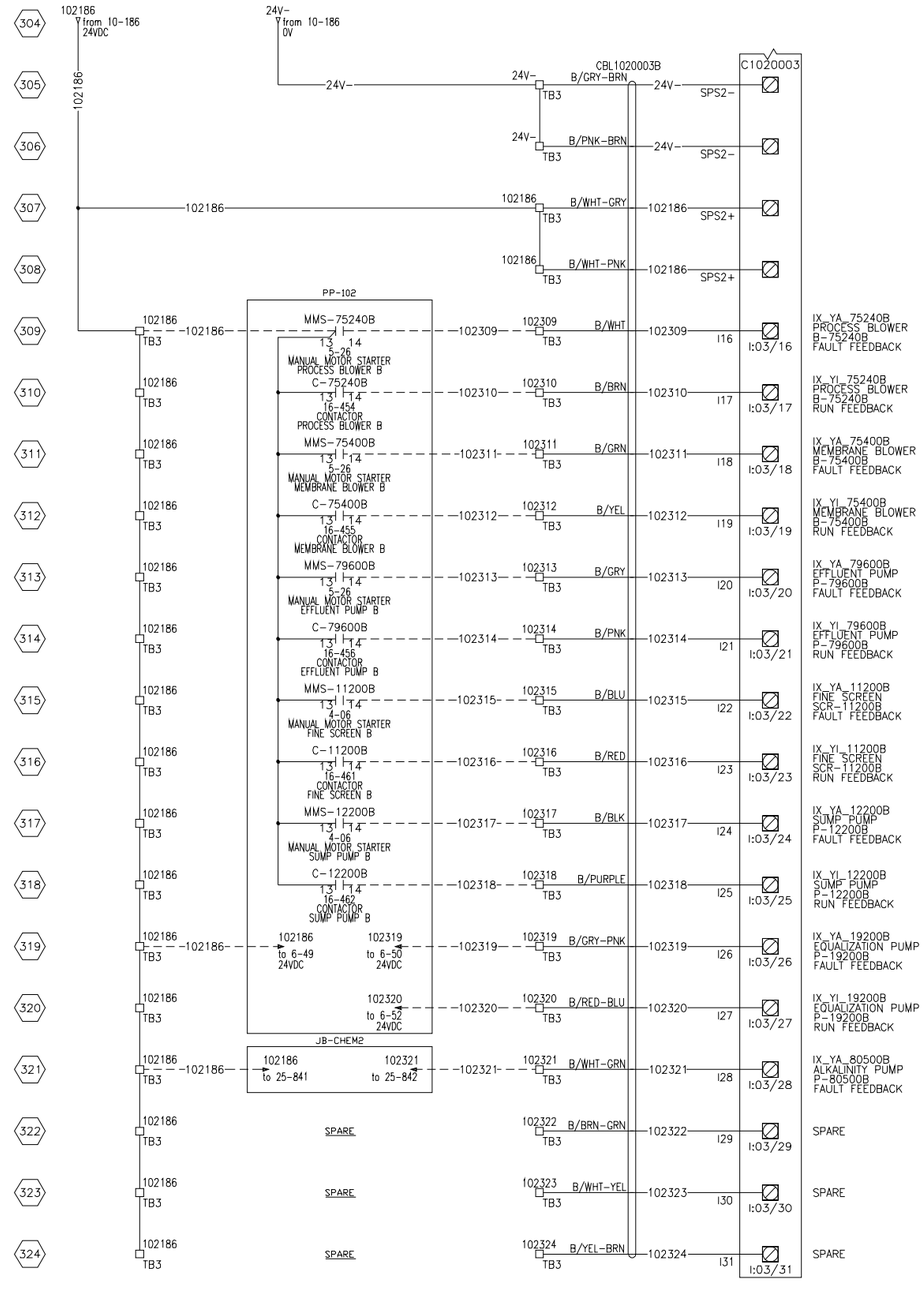

NOTE:

THE INFORMATION, SPECIFICATIONS AND DATA SHOWN ON THIS PRINT ARE FURNISHED BY AND ARE TO REMAIN THE PROPERTY OF H_2O INNOVATION.

THE PURPOSE OF THIS DOCUMENT IS TO FACILITATE THE INSTALLATION, MAINTENANCE AND OPERATION OF THE EQUIPMENT REPRESENTED BY SAID PRINT. NO OTHER USE OF THIS DOCUMENT SHALL BE MADE WITHOUT EXPRESS WRITTEN CONSENT FROM H_2O INNOVATION.

NO.	DATE	REVISION	DWN BY	ENGINEER	CHK'D BY
.00	29/07/2016	INITIAL VERSION	E.R.		

h2o innovation
knowledge to share, to serve & perhaps...

DWG TITLE
MELIADINE STP
CONTAINERIZED SEWAGE
TREATMENT PLANT
ELECTRICAL DRAWINGS

MCP-102
MAIN CONTROL PANEL
DIGITAL INPUT

JOB NO: U65875

DWG NO: U65875-C03-MCP102-DI-02

SHEET NO: 12 OF 35

REVISION: .00

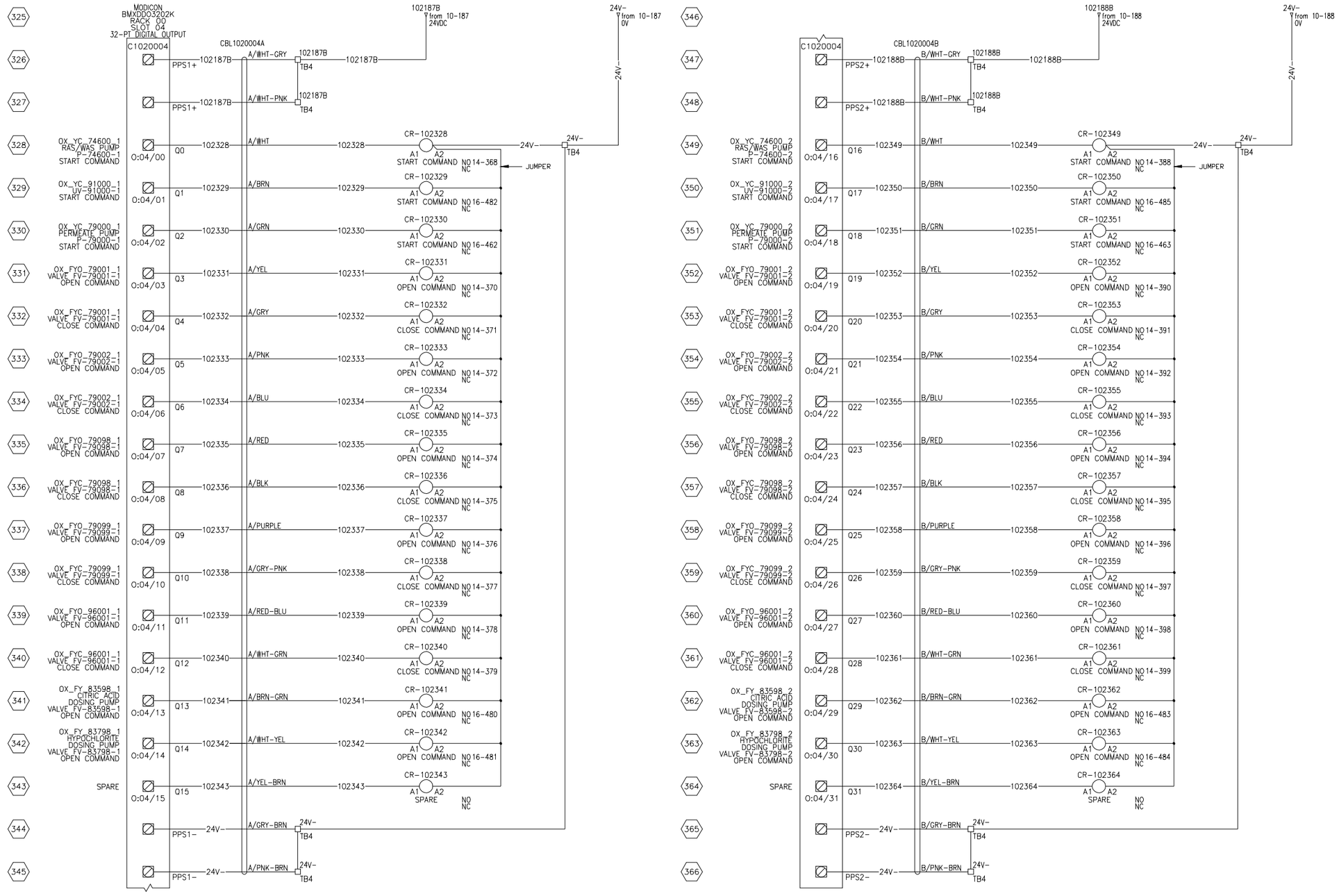

NOTE:

THE INFORMATION, SPECIFICATIONS AND DATA SHOWN ON THIS PRINT ARE FURNISHED BY AND ARE TO REMAIN THE PROPERTY OF H_2O INNOVATION.

THE PURPOSE OF THIS DOCUMENT IS TO FACILITATE THE INSTALLATION, MAINTENANCE AND OPERATION OF THE EQUIPMENT REPRESENTED BY SAID PRINT. NO OTHER USE OF THIS DOCUMENT SHALL BE MADE WITHOUT EXPRESS WRITTEN CONSENT FROM H_2O INNOVATION.

NO.	DATE	REVISION	DWN BY	ENGINEER	CHK'D BY
.00	29/07/2016	INITIAL VERSION	E.R.		

h2o innovation
knowledge to share du savoir à partager

DWG TITLE
MELIADINE STP
CONTAINERIZED SEWAGE
TREATMENT PLANT
ELECTRICAL DRAWINGS

MCP-102
MAIN CONTROL PANEL
DIGITAL OUTPUT

JOB NO
U65875

DWG NO
U65875-C03-MCP102-DO-01

SHEET NO
13 OF 35

REVISION
.00

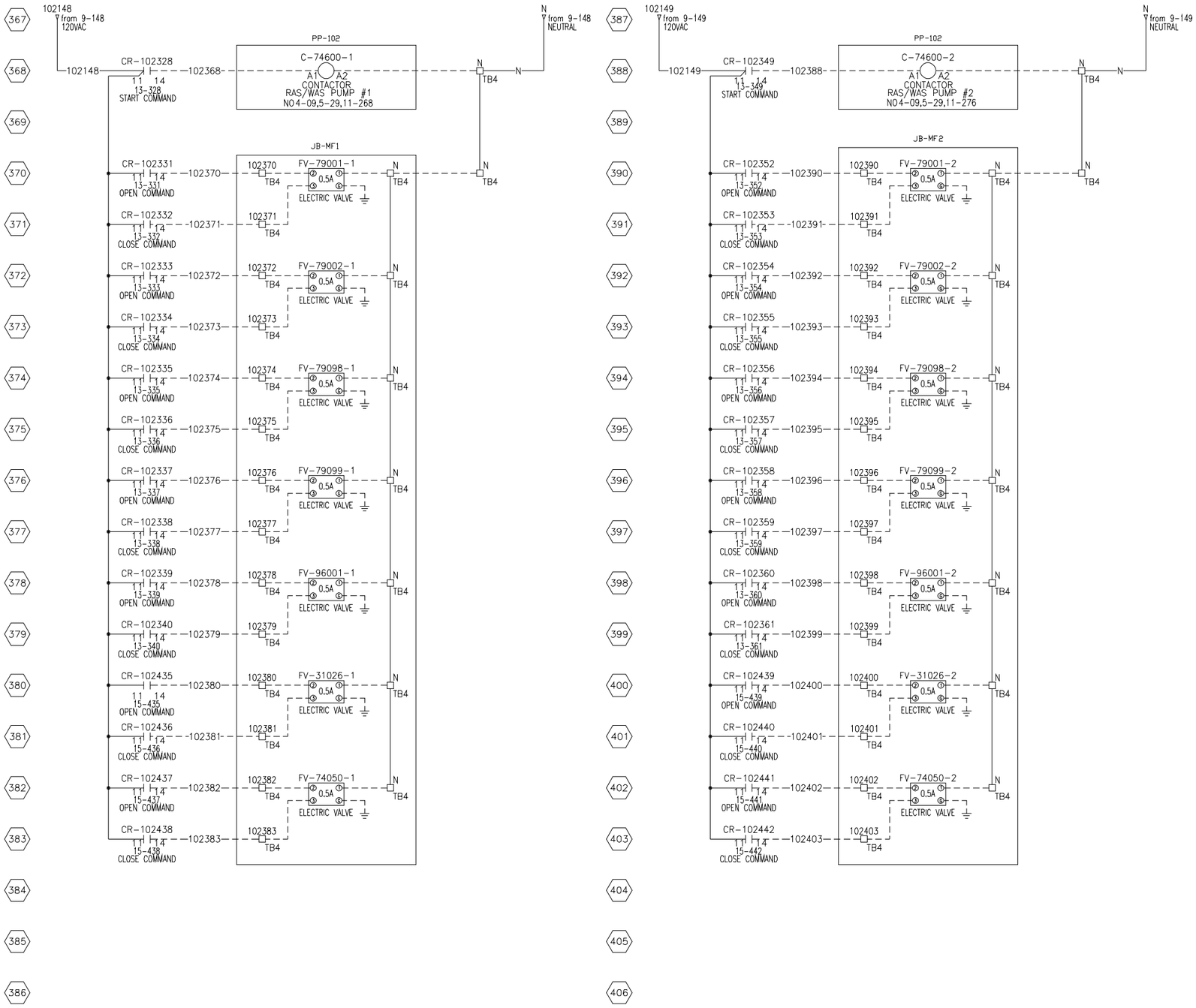

NOTE:

THE INFORMATION, SPECIFICATIONS AND DATA SHOWN ON THIS PRINT ARE FURNISHED BY AND ARE TO REMAIN THE PROPERTY OF H_2O INNOVATION.

THE PURPOSE OF THIS DOCUMENT IS TO FACILITATE THE INSTALLATION, MAINTENANCE AND OPERATION OF THE EQUIPMENT REPRESENTED BY SAID PRINT. NO OTHER USE OF THIS DOCUMENT SHALL BE MADE WITHOUT EXPRESS WRITTEN CONSENT FROM H_2O INNOVATION.

NO.	DATE	REVISION	DWN BY	ENGINEER	CHK'D BY
.00	29/07/2016	INITIAL VERSION	E.R.		

h2o innovation
knowledge to share du savoir à partager

DWG TITLE

MELIADINE STP
CONTAINERIZED SEWAGE
TREATMENT PLANT
ELECTRICAL DRAWINGS

MCP-102
MAIN CONTROL PANEL
DIGITAL OUTPUT

JOB NO
U65875

DWG NO
U65875-C03-MCP102-DO-02

SHEET NO	REVISION
14 OF 35	.00

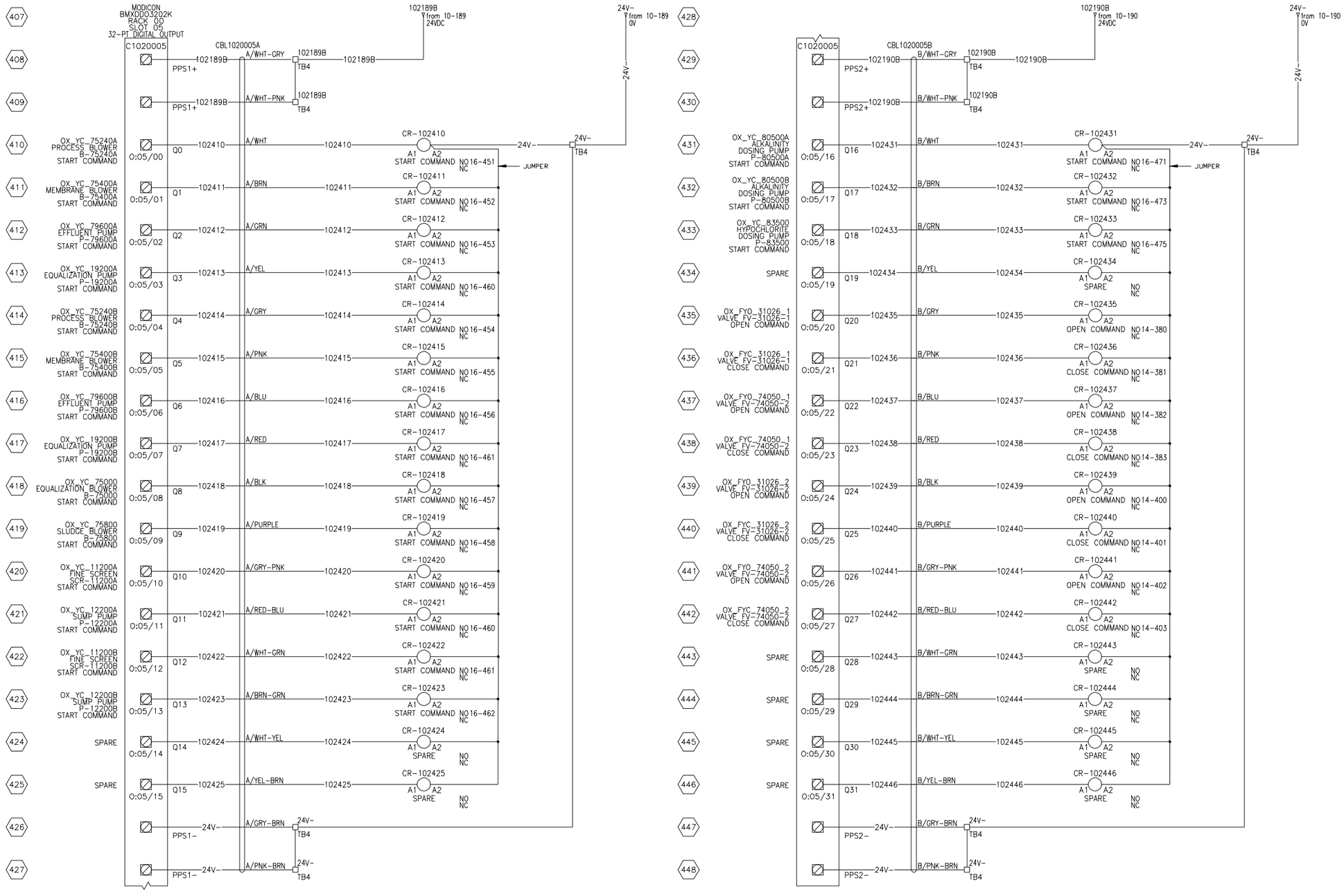

NOTE:

THE INFORMATION, SPECIFICATIONS AND DATA SHOWN ON THIS PRINT ARE FURNISHED BY AND ARE TO REMAIN THE PROPERTY OF H_2O INNOVATION.

THE PURPOSE OF THIS DOCUMENT IS TO FACILITATE THE INSTALLATION, MAINTENANCE AND OPERATION OF THE EQUIPMENT REPRESENTED BY SAID PRINT. NO OTHER USE OF THIS DOCUMENT SHALL BE MADE WITHOUT EXPRESS WRITTEN CONSENT FROM H_2O INNOVATION.

NO.	DATE	REVISION	DWN BY	ENGINEER	CHK'D BY
.00	29/07/2016	INITIAL VERSION	E.R.		

h2o innovation
knowledge to share du savoir à partager

DWG TITLE
MELIADINE STP
CONTAINERIZED SEWAGE TREATMENT PLANT
ELECTRICAL DRAWINGS

MCP-102
MAIN CONTROL PANEL
DIGITAL OUTPUT

JOB NO
U65875

DWG NO
U65875-C03-MCP102-DO-03

SHEET NO
15 OF 35

REVISION
.00

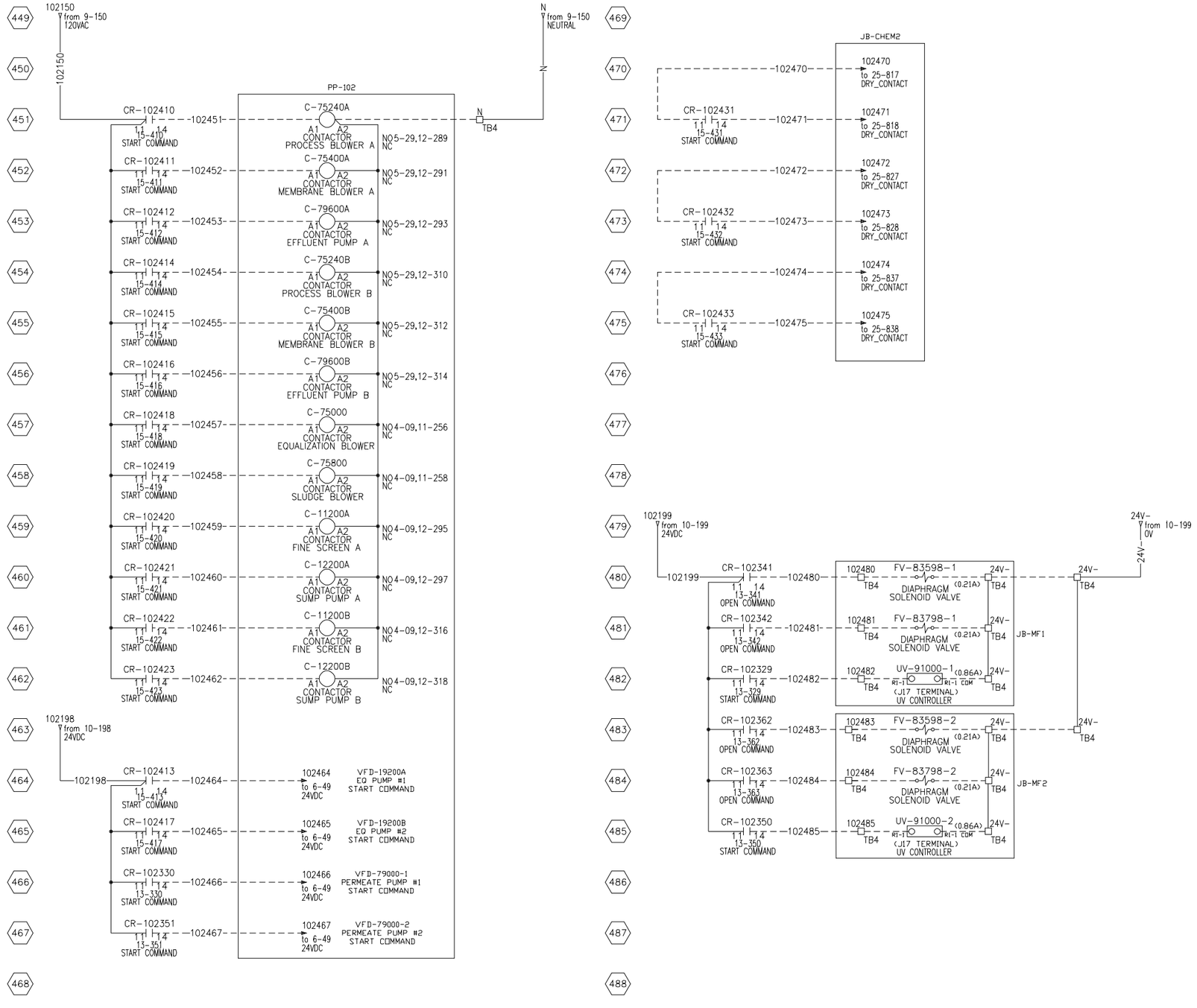

NOTE:

THE INFORMATION, SPECIFICATIONS AND DATA SHOWN ON THIS PRINT ARE FURNISHED BY AND ARE TO REMAIN THE PROPERTY OF H_2O INNOVATION.

THE PURPOSE OF THIS DOCUMENT IS TO FACILITATE THE INSTALLATION, MAINTENANCE AND OPERATION OF THE EQUIPMENT REPRESENTED BY SAID PRINT. NO OTHER USE OF THIS DOCUMENT SHALL BE MADE WITHOUT EXPRESS WRITTEN CONSENT FROM H_2O INNOVATION.

NO.	DATE	REVISION	DWN BY	ENGINEER	CHK'D BY
.00	29/07/2016	INITIAL VERSION	E.R.		

h2o innovation
knowledge to share du savoir à partager

DWG TITLE
MELIADINE STP
CONTAINERIZED SEWAGE
TREATMENT PLANT
ELECTRICAL DRAWINGS

MCP-102
MAIN CONTROL PANEL
DIGITAL OUTPUT

JOB NO
U65875

DWG NO
U65875-C03-MCP102-DO-04

SHEET NO
16 OF 35

REVISION
.00

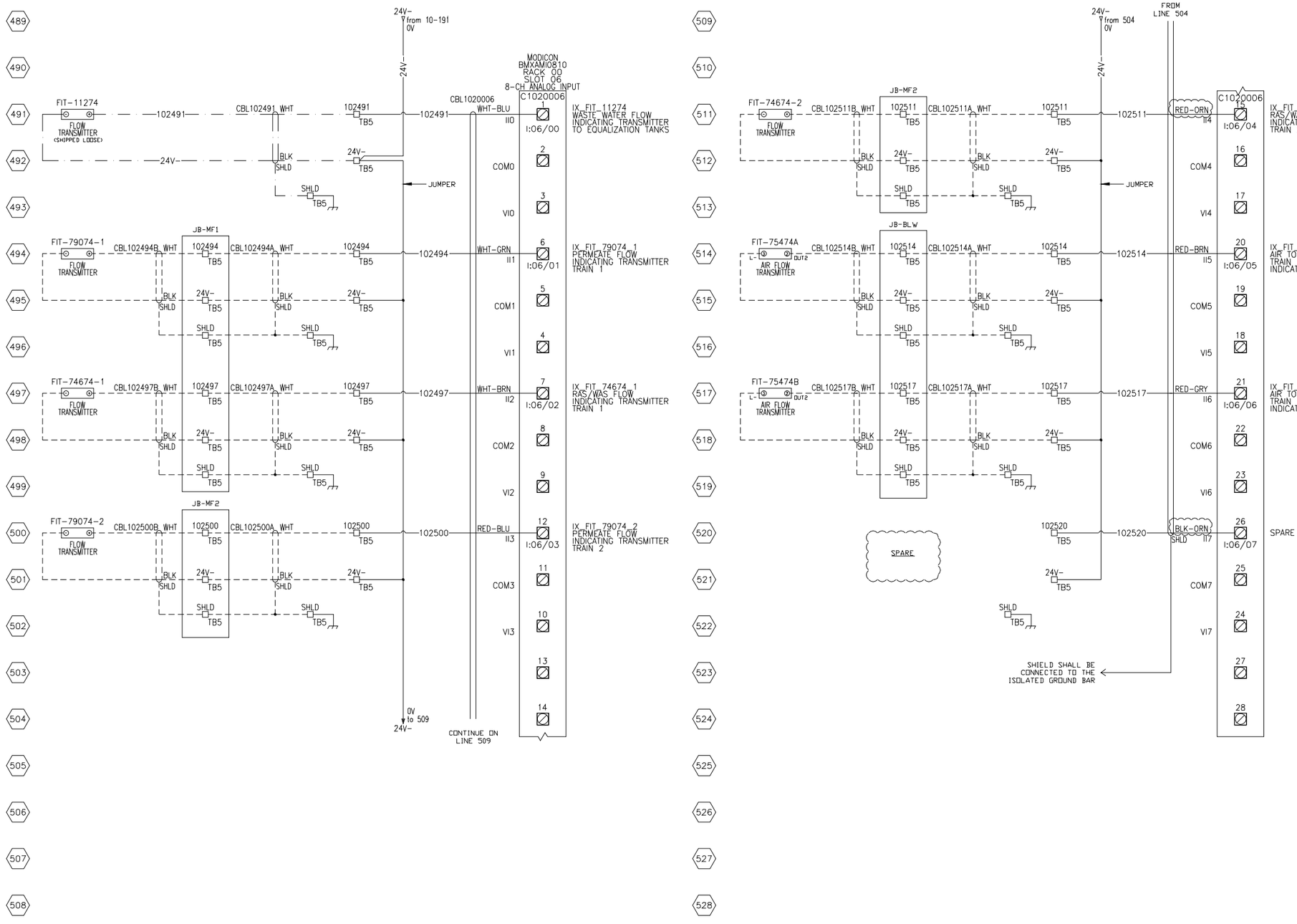

NOTE:

THE INFORMATION, SPECIFICATIONS AND DATA SHOWN ON THIS PRINT ARE FURNISHED BY AND ARE TO REMAIN THE PROPERTY OF H_2O INNOVATION.

THE PURPOSE OF THIS DOCUMENT IS TO FACILITATE THE INSTALLATION, MAINTENANCE AND OPERATION OF THE EQUIPMENT REPRESENTED BY SAID PRINT. NO OTHER USE OF THIS DOCUMENT SHALL BE MADE WITHOUT EXPRESS WRITTEN CONSENT FROM H_2O INNOVATION.

NO.	DATE	REVISION	DWN BY	ENGINEER	CHK'D BY
.00	29/07/2016	INITIAL VERSION	E.R.		

h2o innovation
knowledge to share du savoir à partager

DWG TITLE

MELIADINE STP
CONTAINERIZED SEWAGE
TREATMENT PLANT
ELECTRICAL DRAWINGS

MCP-102
MAIN CONTROL PANEL
ANALOG INPUT

JOB NO
U65875

DWG NO
U65875-C03-MCP102-AI-01

SHEET NO
17 OF 35

REVISION
.00

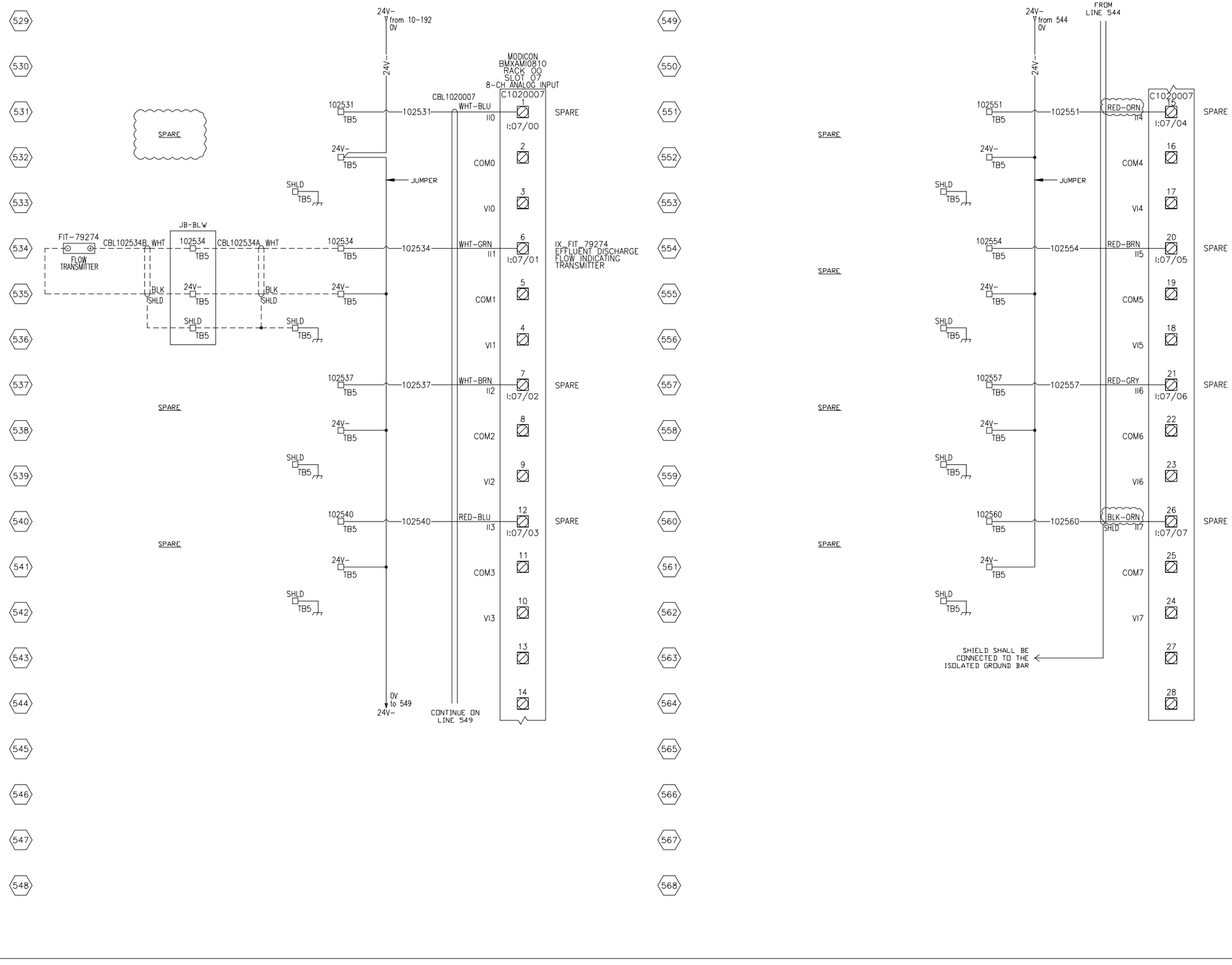

NOTE:

THE INFORMATION, SPECIFICATIONS AND DATA SHOWN ON THIS PRINT ARE FURNISHED BY AND ARE TO REMAIN THE PROPERTY OF H_2O INNOVATION.

THE PURPOSE OF THIS DOCUMENT IS TO FACILITATE THE INSTALLATION, MAINTENANCE AND OPERATION OF THE EQUIPMENT REPRESENTED BY SAID PRINT. NO OTHER USE OF THIS DOCUMENT SHALL BE MADE WITHOUT EXPRESS WRITTEN CONSENT FROM H_2O INNOVATION.

NO.	DATE	REVISION	DWN BY	ENGINEER	CHK'D BY
.00	29/07/2016	INITIAL VERSION	E.R.		

h2o innovation
knowledge to share du savoir à partager

DWG TITLE
MELIADINE STP
CONTAINERIZED SEWAGE
TREATMENT PLANT
ELECTRICAL DRAWINGS

MCP-102
MAIN CONTROL PANEL
ANALOG INPUT

JOB NO
U65875

DWG NO
U65875-C03-MCP102-AI-02

SHEET NO
18 OF 35

REVISION
.00

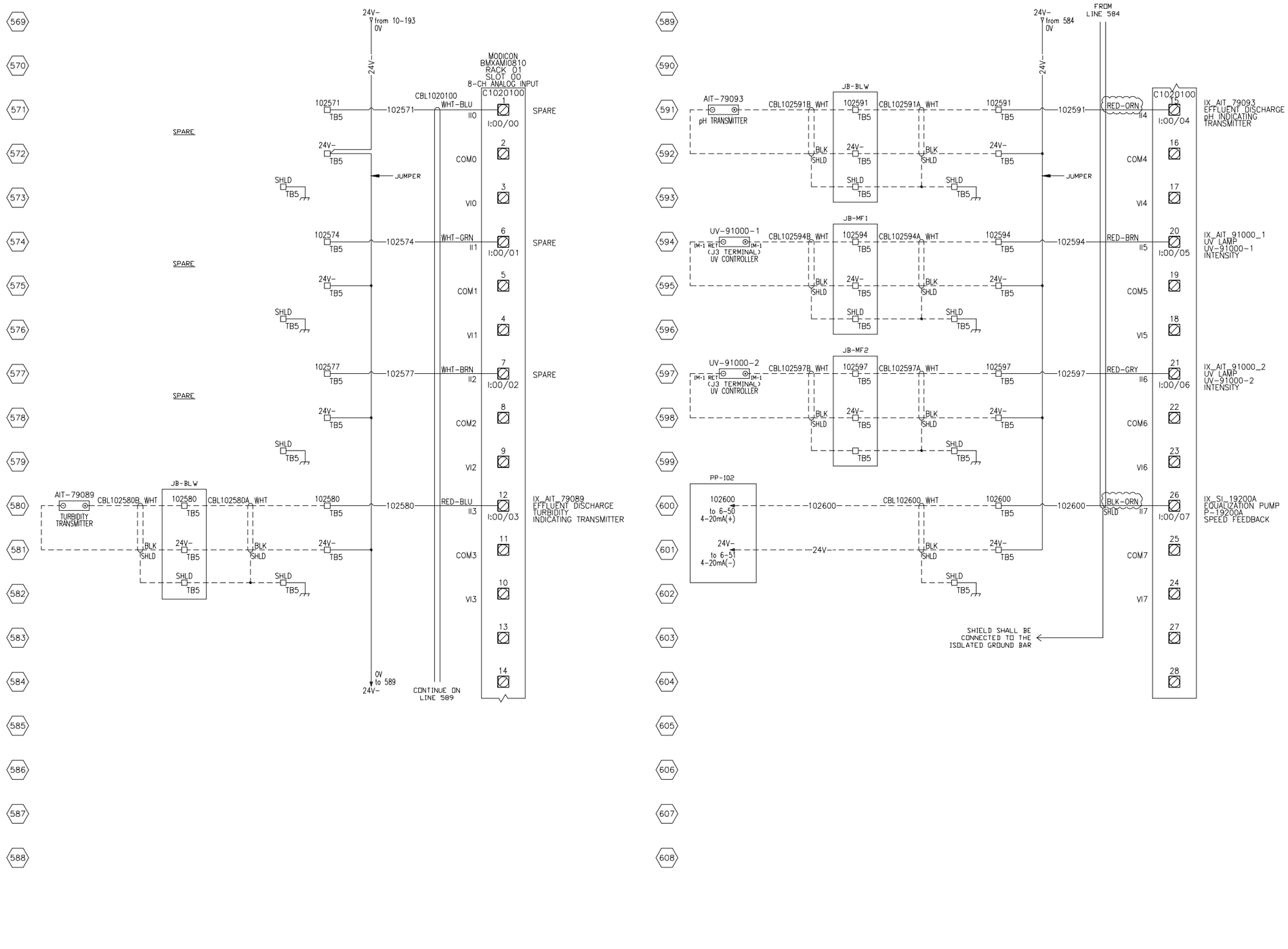

NOTE:

THE INFORMATION, SPECIFICATIONS AND DATA SHOWN ON THIS PRINT ARE FURNISHED BY AND ARE TO REMAIN THE PROPERTY OF H_2O INNOVATION.

THE PURPOSE OF THIS DOCUMENT IS TO FACILITATE THE INSTALLATION, MAINTENANCE AND OPERATION OF THE EQUIPMENT REPRESENTED BY SAID PRINT. NO OTHER USE OF THIS DOCUMENT SHALL BE MADE WITHOUT EXPRESS WRITTEN CONSENT FROM H_2O INNOVATION.

NO.	DATE	REVISION	DWN BY	ENGINEER	CHK'D BY
.00	29/07/2016	INITIAL VERSION	E.R.		

h2o innovation
knowledge to share du savoir à partager

DWG TITLE

MELIADINE STP
CONTAINERIZED SEWAGE
TREATMENT PLANT
ELECTRICAL DRAWINGS

MCP-102
MAIN CONTROL PANEL
ANALOG INPUT

JOB NO: U65875

DWG NO: U65875-C03-MCP102-AI-03

SHEET NO: 19 OF 35

REVISION: .00

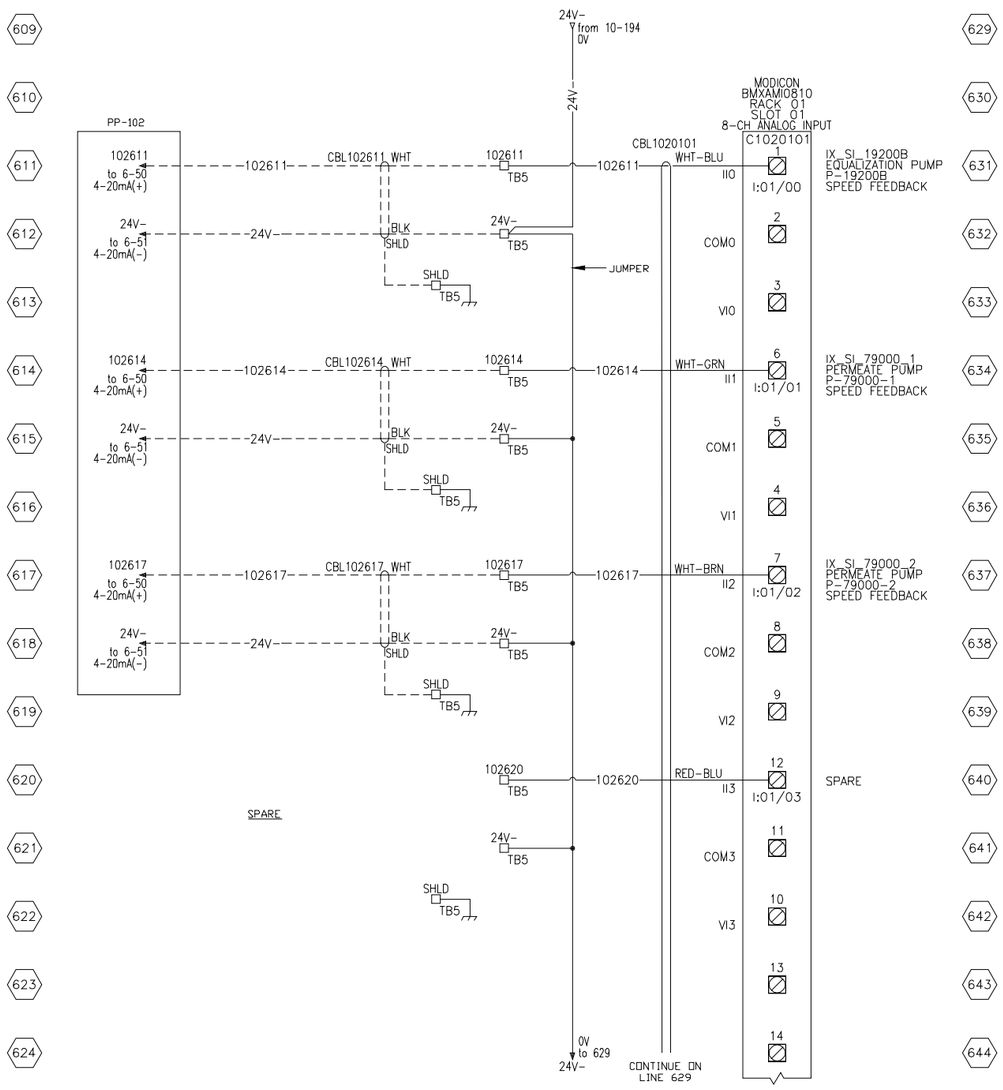

NOTE:

THE INFORMATION, SPECIFICATIONS AND DATA SHOWN ON THIS PRINT ARE FURNISHED BY AND ARE TO REMAIN THE PROPERTY OF H_2O INNOVATION.

THE PURPOSE OF THIS DOCUMENT IS TO FACILITATE THE INSTALLATION, MAINTENANCE AND OPERATION OF THE EQUIPMENT REPRESENTED BY SAID PRINT. NO OTHER USE OF THIS DOCUMENT SHALL BE MADE WITHOUT EXPRESS WRITTEN CONSENT FROM H_2O INNOVATION.

NO.	DATE		DWN BY	ENGINEER	CHK'D BY
.00	29/07/2016	INITIAL VERSION	E.R.		
		REVISION			

h2o innovation
knowledge to share du savoir à partager

DWG TITLE

MELIADINE STP
CONTAINERIZED SEWAGE
TREATMENT PLANT
ELECTRICAL DRAWINGS

MCP-102
MAIN CONTROL PANEL
ANALOG INPUT

JOB NO

U65875

DWG NO

U65875-C03-MCP102-AI-04

SHEET NO	REVISION
20 OF 35	.00

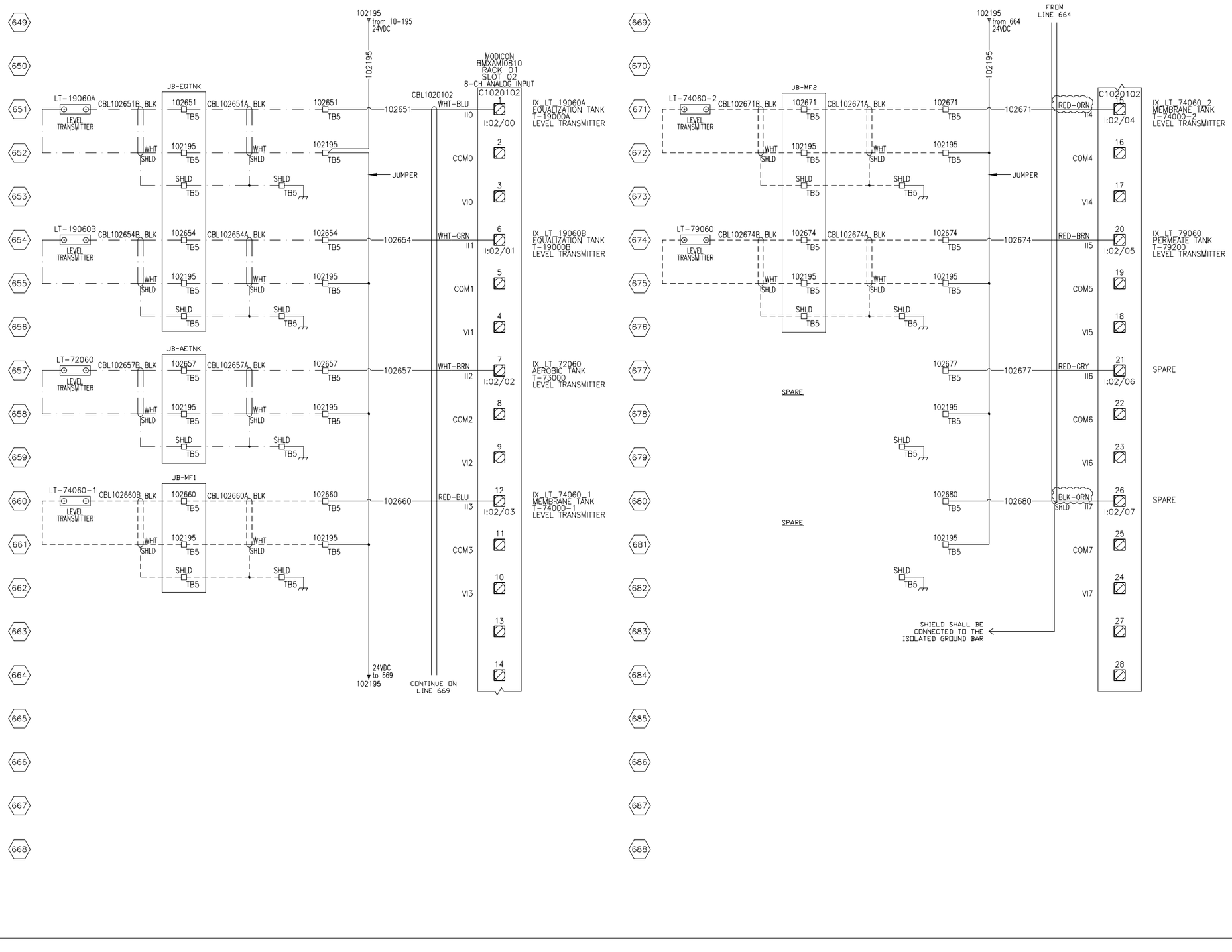

NOTE:

THE INFORMATION, SPECIFICATIONS AND DATA SHOWN ON THIS PRINT ARE FURNISHED BY AND ARE TO REMAIN THE PROPERTY OF H_2O INNOVATION.

THE PURPOSE OF THIS DOCUMENT IS TO FACILITATE THE INSTALLATION, MAINTENANCE AND OPERATION OF THE EQUIPMENT REPRESENTED BY SAID PRINT. NO OTHER USE OF THIS DOCUMENT SHALL BE MADE WITHOUT EXPRESS WRITTEN CONSENT FROM H_2O INNOVATION.

NO.	DATE		DWN BY	ENGINEER	CHK'D BY
.00	29/07/2016	INITIAL VERSION	E.R.		
		REVISION			

h2o innovation
knowledge to share du savoir à partager

DWG TITLE
MELIADINE STP
CONTAINERIZED SEWAGE
TREATMENT PLANT
ELECTRICAL DRAWINGS

MCP-102
MAIN CONTROL PANEL
ANALOG INPUT

JOB NO
U65875

DWG NO
U65875-C03-MCP102-AI-05

SHEET NO
21 OF 35

REVISION
.00

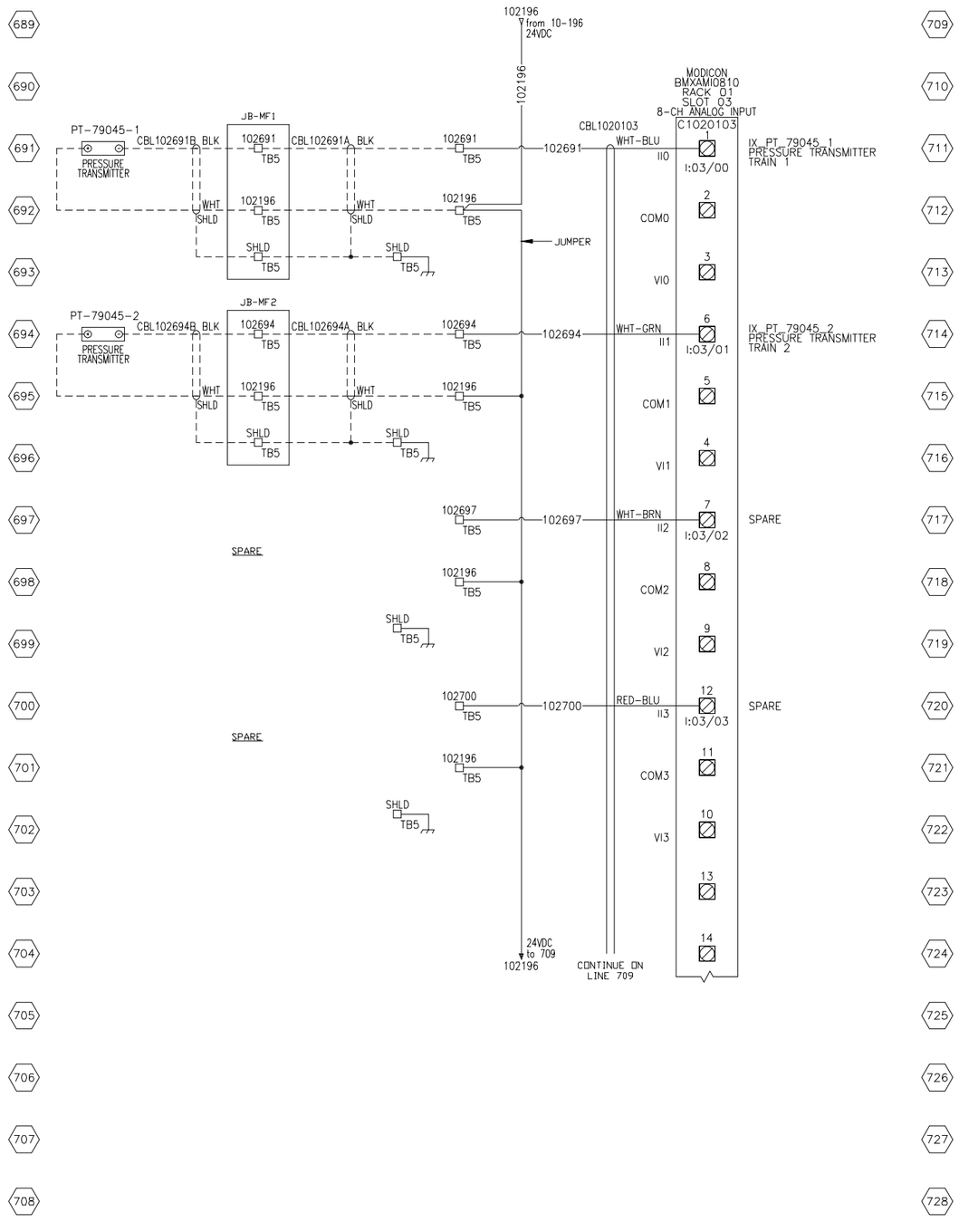

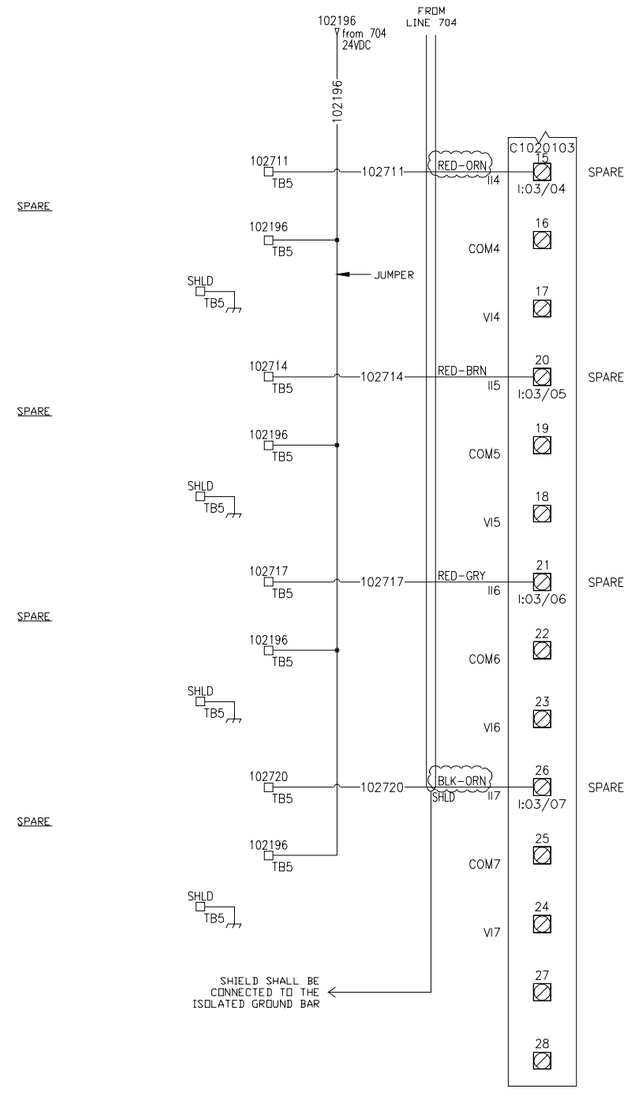

NOTE:

THE INFORMATION, SPECIFICATIONS AND DATA SHOWN ON THIS PRINT ARE FURNISHED BY AND ARE TO REMAIN THE PROPERTY OF H_2O INNOVATION.

THE PURPOSE OF THIS DOCUMENT IS TO FACILITATE THE INSTALLATION, MAINTENANCE AND OPERATION OF THE EQUIPMENT REPRESENTED BY SAID PRINT. NO OTHER USE OF THIS DOCUMENT SHALL BE MADE WITHOUT EXPRESS WRITTEN CONSENT FROM H_2O INNOVATION.

NO.	DATE	REVISION	DWN BY	ENGINEER	CHK'D BY
.00	29/07/2016	INITIAL VERSION	E.R.		

h2O innovation
knowledge to share du savoir à partager

DWG TITLE
MELIADINE STP
CONTAINERIZED SEWAGE
TREATMENT PLANT
ELECTRICAL DRAWINGS

MCP-102
MAIN CONTROL PANEL
ANALOG INPUT

JOB NO
U65875

DWG NO
U65875-C03-MCP102-AI-06

SHEET NO
22 OF 35

REVISION
.00

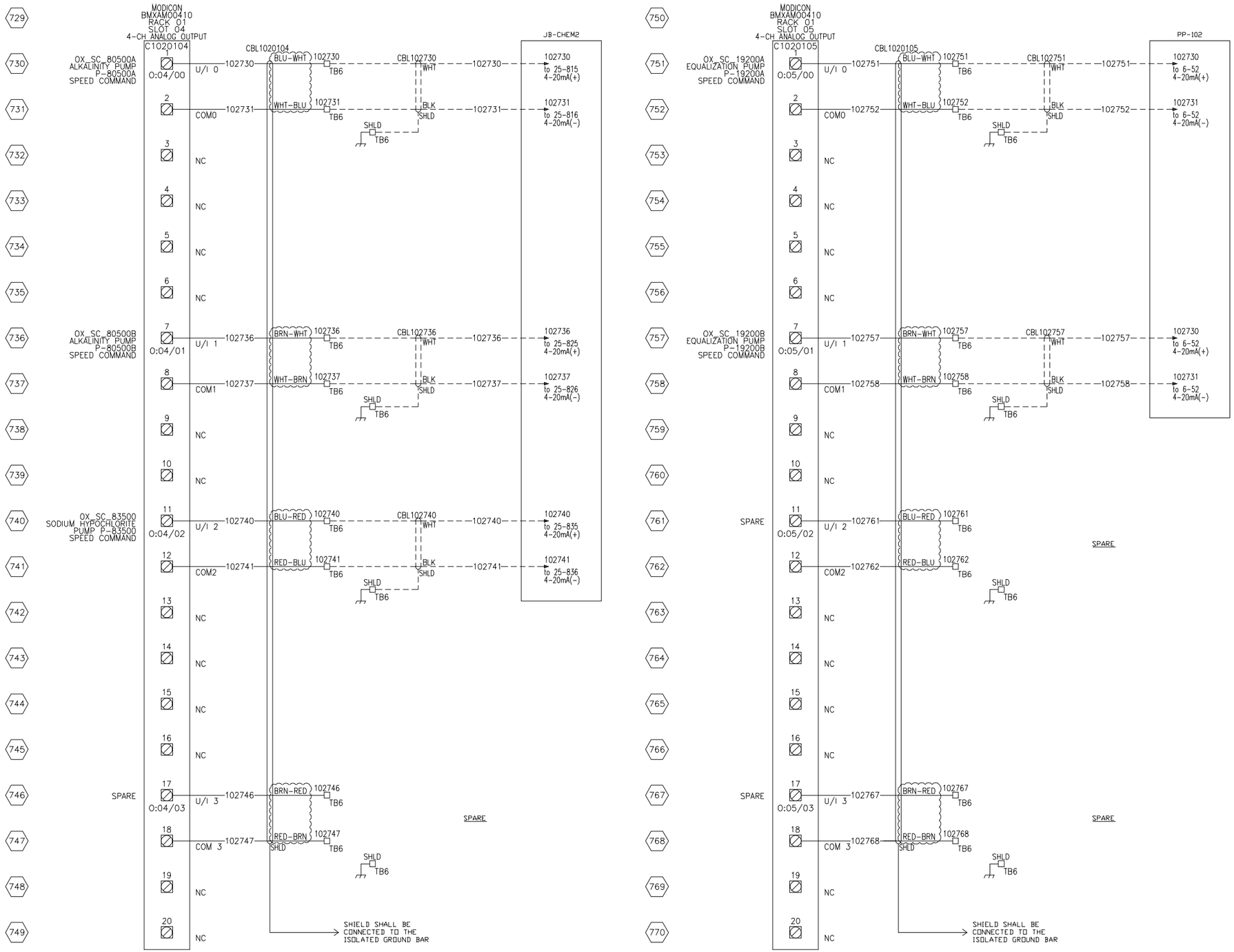

NOTE:

THE INFORMATION, SPECIFICATIONS AND DATA SHOWN ON THIS PRINT ARE FURNISHED BY AND ARE TO REMAIN THE PROPERTY OF H_2O INNOVATION.

THE PURPOSE OF THIS DOCUMENT IS TO FACILITATE THE INSTALLATION, MAINTENANCE AND OPERATION OF THE EQUIPMENT REPRESENTED BY SAID PRINT. NO OTHER USE OF THIS DOCUMENT SHALL BE MADE WITHOUT EXPRESS WRITTEN CONSENT FROM H_2O INNOVATION.

NO.	DATE	REVISION	DWN BY	ENGINEER	CHK'D BY
.00	29/07/2016	INITIAL VERSION	E.R.		

DWG TITLE

MELIADINE STP
CONTAINERIZED SEWAGE
TREATMENT PLANT
ELECTRICAL DRAWINGS

MCP-102
MAIN CONTROL PANEL
ANALOG OUTPUT

JOB NO: U65875

DWG NO: U65875-C03-MCP102-AO-01

SHEET NO: 23 OF 35

REVISION: .00

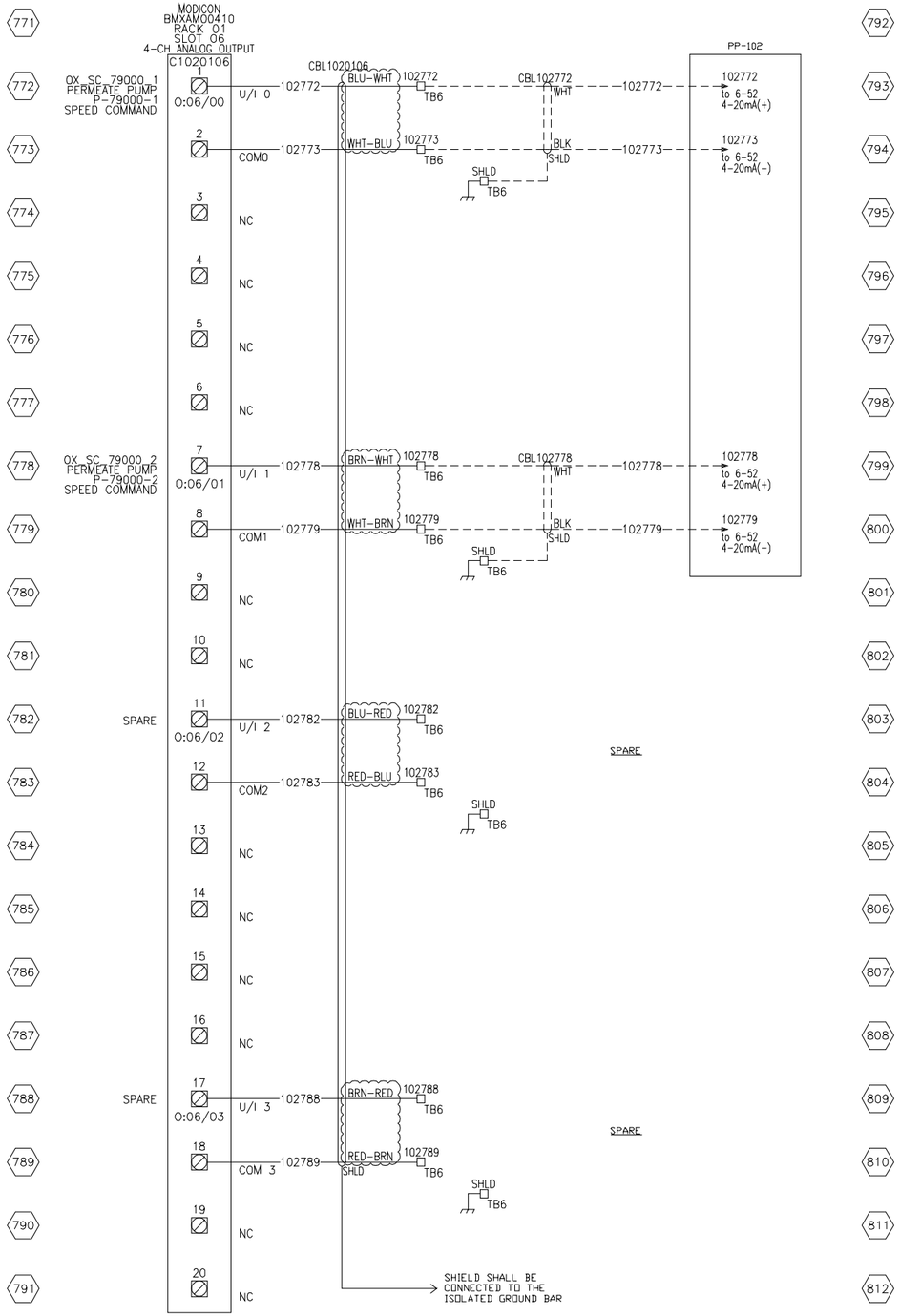

NOTE:

THE INFORMATION, SPECIFICATIONS AND DATA SHOWN ON THIS PRINT ARE FURNISHED BY AND ARE TO REMAIN THE PROPERTY OF H_2O INNOVATION.

THE PURPOSE OF THIS DOCUMENT IS TO FACILITATE THE INSTALLATION, MAINTENANCE AND OPERATION OF THE EQUIPMENT REPRESENTED BY SAID PRINT. NO OTHER USE OF THIS DOCUMENT SHALL BE MADE WITHOUT EXPRESS WRITTEN CONSENT FROM H_2O INNOVATION.

NO.	DATE	INITIAL VERSION / REVISION	DWN BY	ENGINEER	CHK'D BY
.00	29/07/2016	INITIAL VERSION	E.R.		

h2o innovation
knowledge to share du savoir à partager

DWG TITLE

MELIADINE STP
CONTAINERIZED SEWAGE
TREATMENT PLANT
ELECTRICAL DRAWINGS

MCP-102
MAIN CONTROL PANEL
ANALOG OUTPUT

JOB NO: U65875

DWG NO: U65875-C03-MCP102-AO-02

SHEET NO: 24 OF 35

REVISION: .00

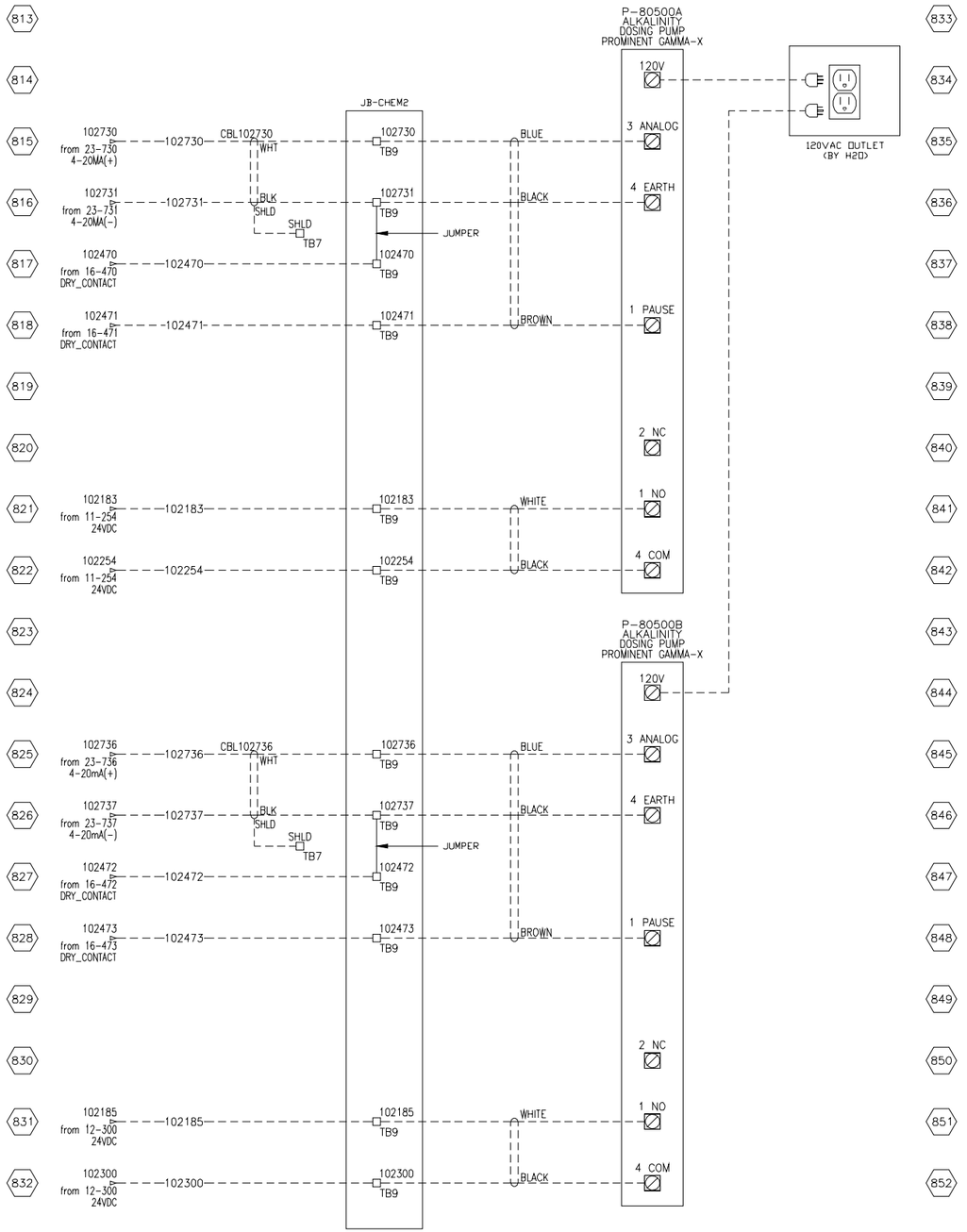

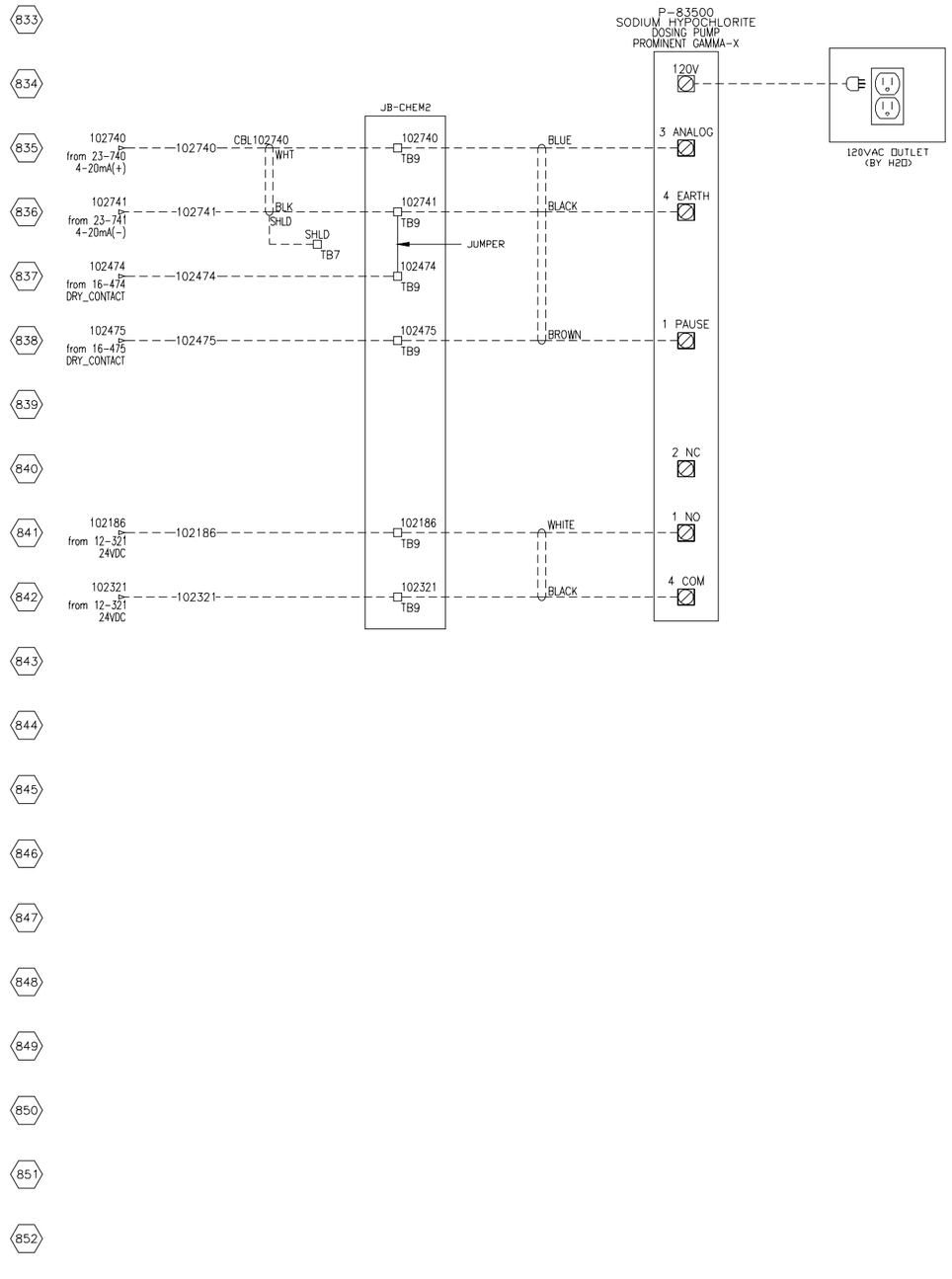

NOTE:

THE INFORMATION, SPECIFICATIONS AND DATA SHOWN ON THIS PRINT ARE FURNISHED BY AND ARE TO REMAIN THE PROPERTY OF H_2O INNOVATION.

THE PURPOSE OF THIS DOCUMENT IS TO FACILITATE THE INSTALLATION, MAINTENANCE AND OPERATION OF THE EQUIPMENT REPRESENTED BY SAID PRINT. NO OTHER USE OF THIS DOCUMENT SHALL BE MADE WITHOUT EXPRESS WRITTEN CONSENT FROM H_2O INNOVATION.

NO.	DATE	REVISION	DWN BY	ENGINEER	CHK'D BY
.00	29/07/2016	INITIAL VERSION	E.R.		

h2o innovation
knowledge to share du savoir à partager

DWG TITLE
MELIADINE STP
CONTAINERIZED SEWAGE
TREATMENT PLANT
ELECTRICAL DRAWINGS

JB-CHEM2
DOSING PUMPS
JUNCTION BOX

JOB NO
U65875

DWG NO
U65875-C03-MCP102-DOSING

SHEET NO
25 OF 35

REVISION
.00

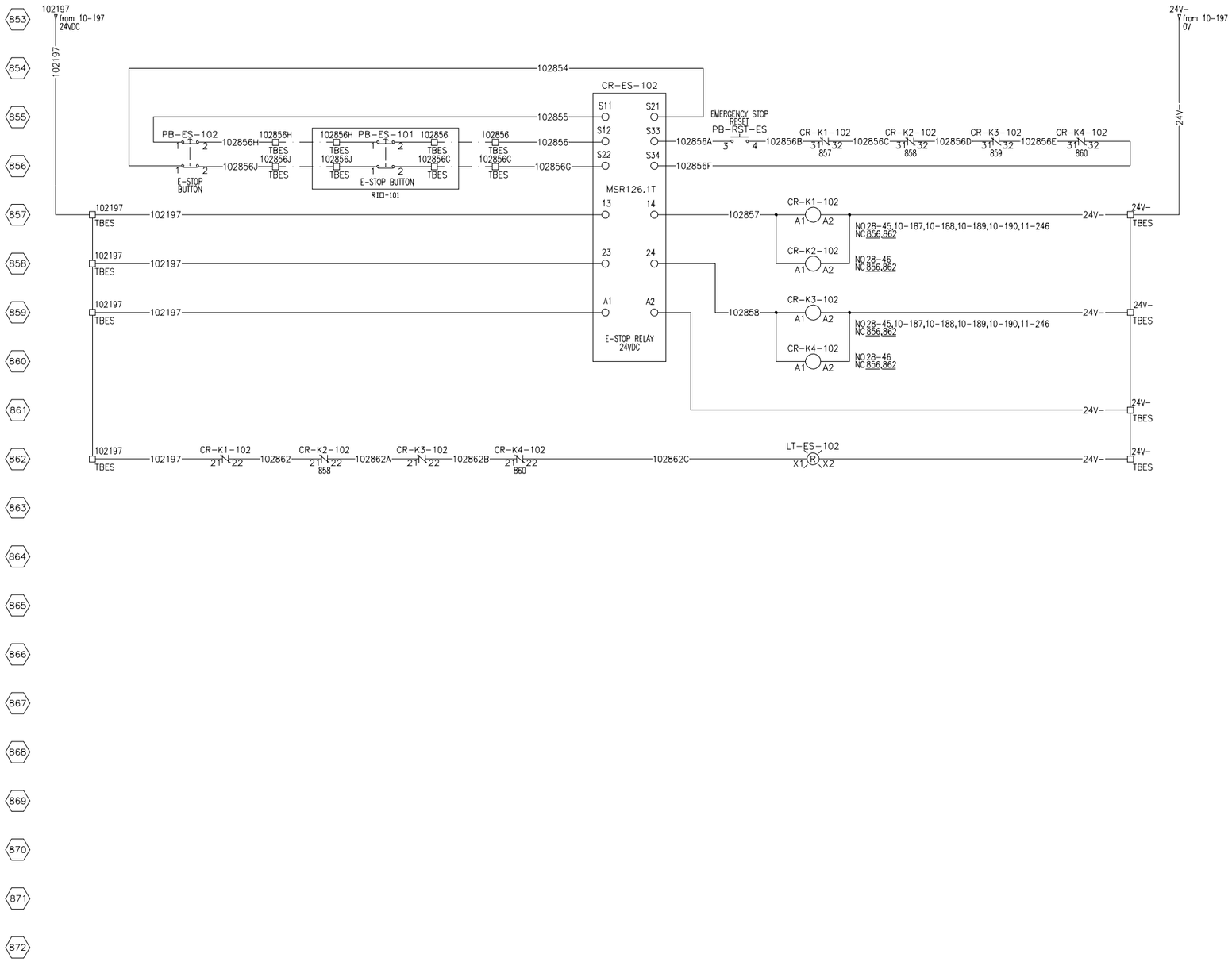

NOTE:

THE INFORMATION, SPECIFICATIONS AND DATA SHOWN ON THIS PRINT ARE FURNISHED BY AND ARE TO REMAIN THE PROPERTY OF H_2O INNOVATION.

THE PURPOSE OF THIS DOCUMENT IS TO FACILITATE THE INSTALLATION, MAINTENANCE AND OPERATION OF THE EQUIPMENT REPRESENTED BY SAID PRINT. NO OTHER USE OF THIS DOCUMENT SHALL BE MADE WITHOUT EXPRESS WRITTEN CONSENT FROM H_2O INNOVATION.

NO.	DATE	REVISION	DWN BY	ENGINEER	CHK'D BY
.00	29/07/2016	INITIAL VERSION	E.R.		

h2o innovation
knowledge to share du savoir à partager

DWG TITLE

MELIADINE STP
CONTAINERIZED SEWAGE
TREATMENT PLANT
ELECTRICAL DRAWINGS

MCP-102
MAIN CONTROL PANEL
EMERGENCY STOP

JOB NO
U65875

DWG NO
U65875-C03-MCP102-ES

SHEET NO	REVISION
26 OF 35	.00

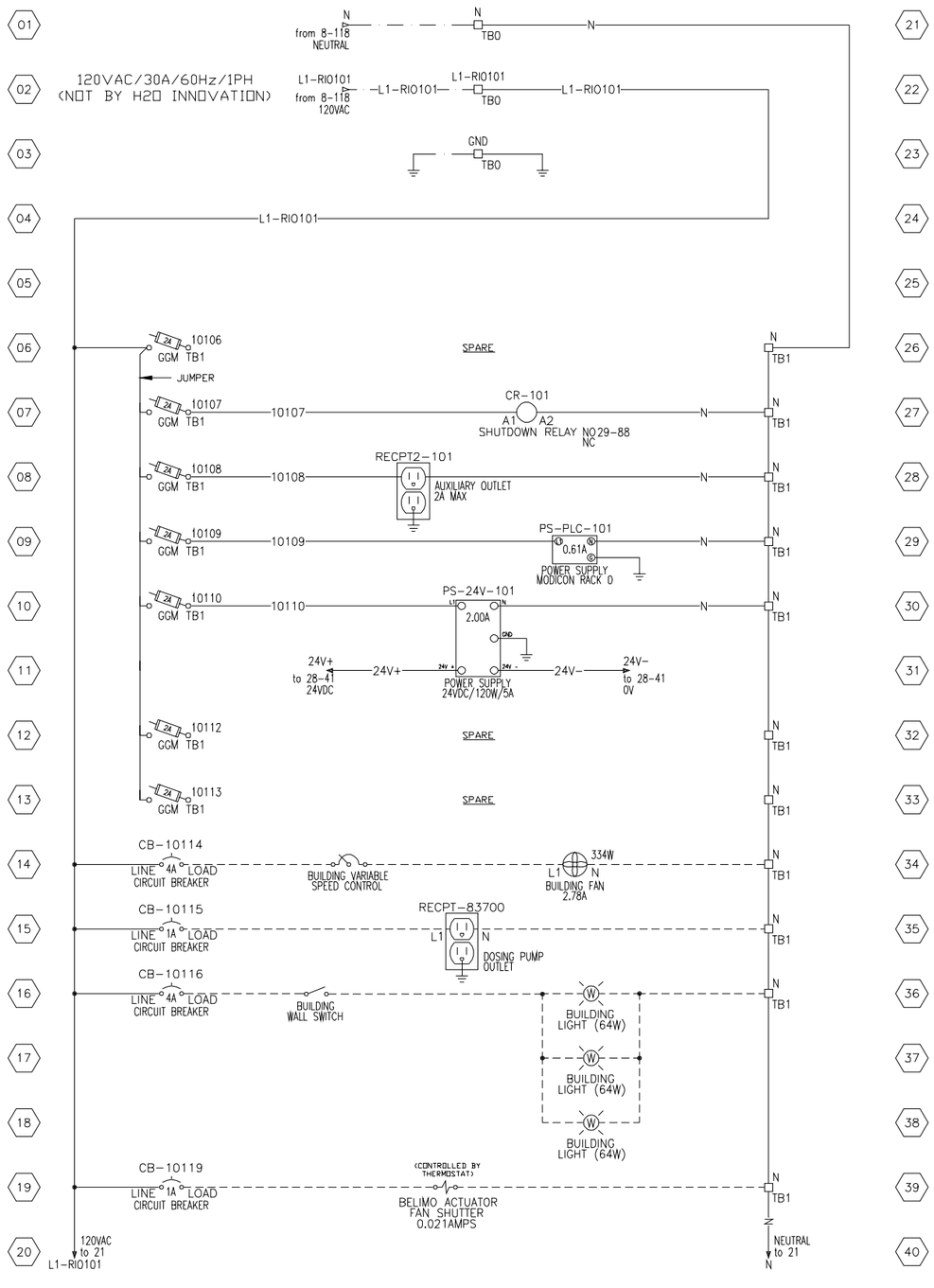

NOTE:

THE INFORMATION, SPECIFICATIONS AND DATA SHOWN ON THIS PRINT ARE FURNISHED BY AND ARE TO REMAIN THE PROPERTY OF H_2O INNOVATION.

THE PURPOSE OF THIS DOCUMENT IS TO FACILITATE THE INSTALLATION, MAINTENANCE AND OPERATION OF THE EQUIPMENT REPRESENTED BY SAID PRINT. NO OTHER USE OF THIS DOCUMENT SHALL BE MADE WITHOUT EXPRESS WRITTEN CONSENT FROM H_2O INNOVATION.

NO.	DATE	REVISION	DWN BY	E.R.	ENGINEER	CHK'D BY
.00	29/07/2016	INITIAL VERSION				

h2o innovation
knowledge to share du savoir à partager

DWG TITLE
MELIADINE STP
CONTAINERIZED SEWAGE
TREATMENT PLANT
ELECTRICAL DRAWINGS

RIO-101
REMOTE I/O PANEL
120VAC DISTRIBUTION

JOB NO
U65875

DWG NO
U65875-C03-RIO101-120V

SHEET NO
27 OF 35

REVISION
.00

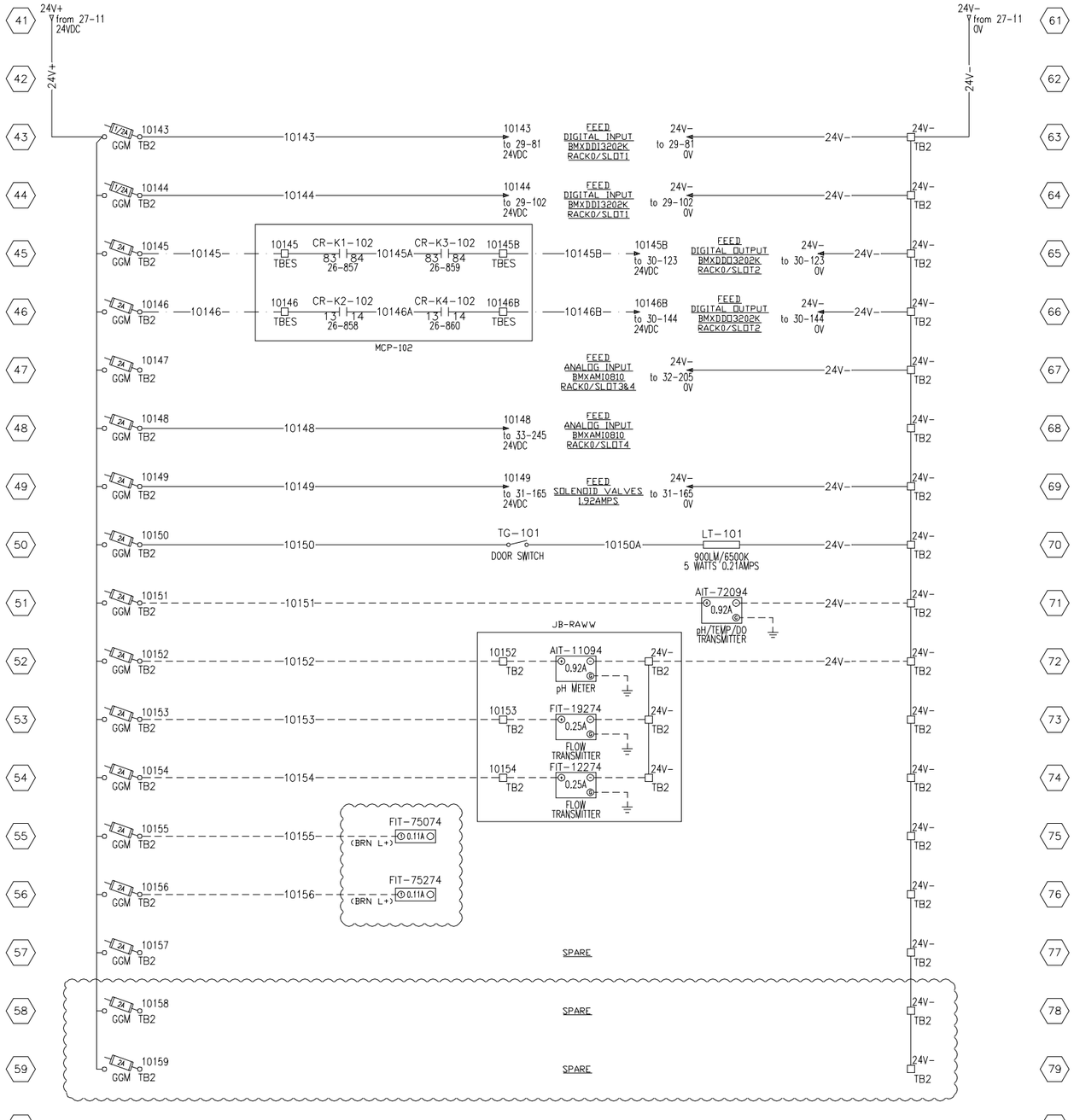

NOTE:

THE INFORMATION, SPECIFICATIONS AND DATA SHOWN ON THIS PRINT ARE FURNISHED BY AND ARE TO REMAIN THE PROPERTY OF H_2O INNOVATION.

THE PURPOSE OF THIS DOCUMENT IS TO FACILITATE THE INSTALLATION, MAINTENANCE AND OPERATION OF THE EQUIPMENT REPRESENTED BY SAID PRINT. NO OTHER USE OF THIS DOCUMENT SHALL BE MADE WITHOUT EXPRESS WRITTEN CONSENT FROM H_2O INNOVATION.

NO.	DATE	REVISION	DWN BY	ENGINEER	CHK'D BY
.00	29/07/2016	INITIAL VERSION	E.R.		

h2o innovation
knowledge to share du savoir à partager

DWG TITLE
MELIADINE STP
CONTAINERIZED SEWAGE TREATMENT PLANT
ELECTRICAL DRAWINGS

RIO-101
REMOTE I/O PANEL
24VDC DISTRIBUTION

JOB NO: U65875

DWG NO: U65875-C03-RIO101-24V

SHEET NO: 28 OF 35

REVISION: .00

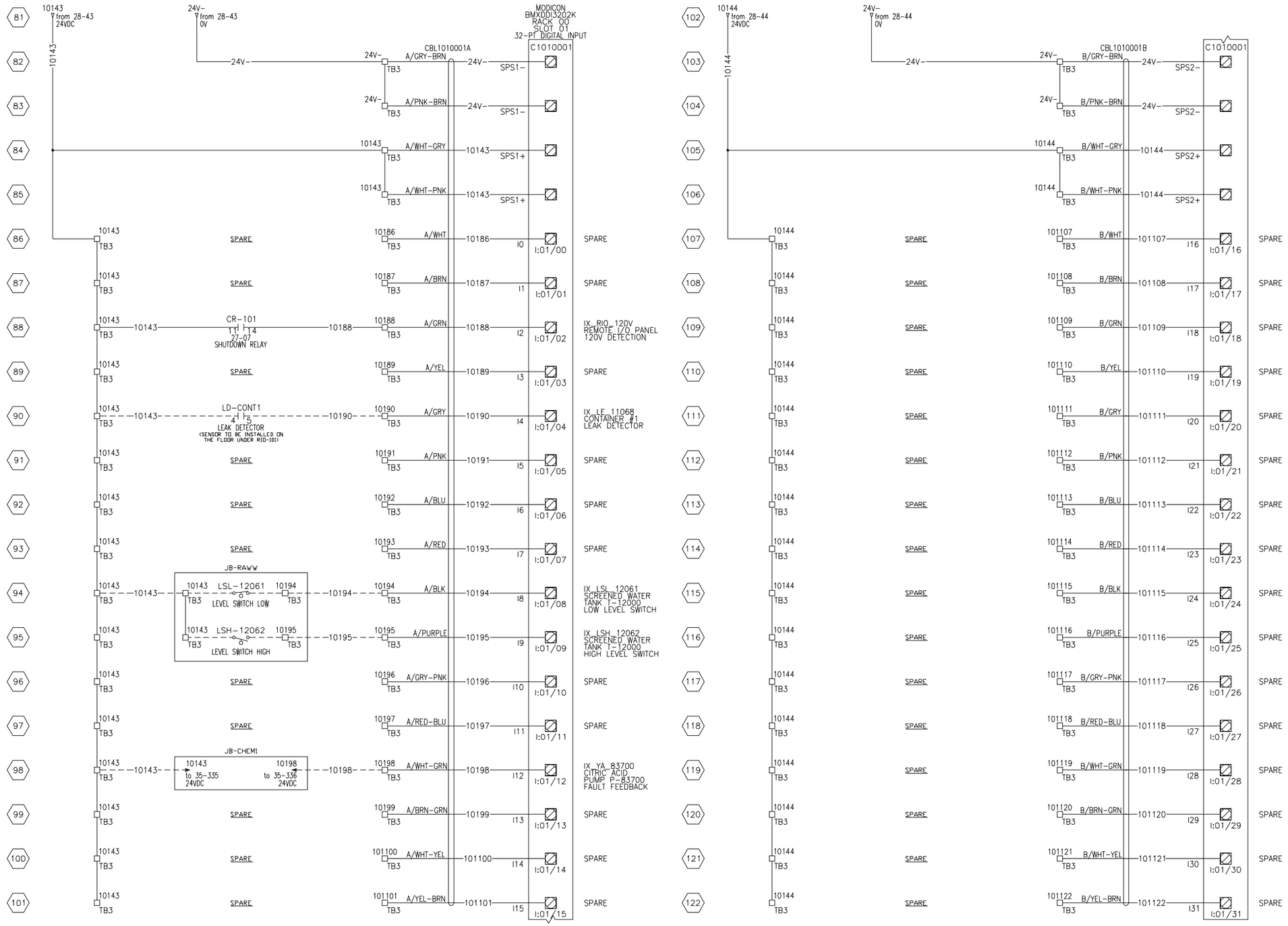

NOTE:

THE INFORMATION, SPECIFICATIONS AND DATA SHOWN ON THIS PRINT ARE FURNISHED BY AND ARE TO REMAIN THE PROPERTY OF H_2O INNOVATION.

THE PURPOSE OF THIS DOCUMENT IS TO FACILITATE THE INSTALLATION, MAINTENANCE AND OPERATION OF THE EQUIPMENT REPRESENTED BY SAID PRINT. NO OTHER USE OF THIS DOCUMENT SHALL BE MADE WITHOUT EXPRESS WRITTEN CONSENT FROM H_2O INNOVATION.

NO.	DATE	REVISION	DWN BY	ENGINEER	CHK'D BY
.00	29/07/2016	INITIAL VERSION	E.R.		

h2o innovation
knowledge to share.du savoir à partager

DWG TITLE
MELIADINE STP
CONTAINERIZED SEWAGE
TREATMENT PLANT
ELECTRICAL DRAWINGS

RIO-101
REMOTE I/O PANEL
DIGITAL INPUT

JOB NO
U65875

DWG NO
U65875-C03-RIO101-DI-01

SHEET NO
29 OF 35

REVISION
.00

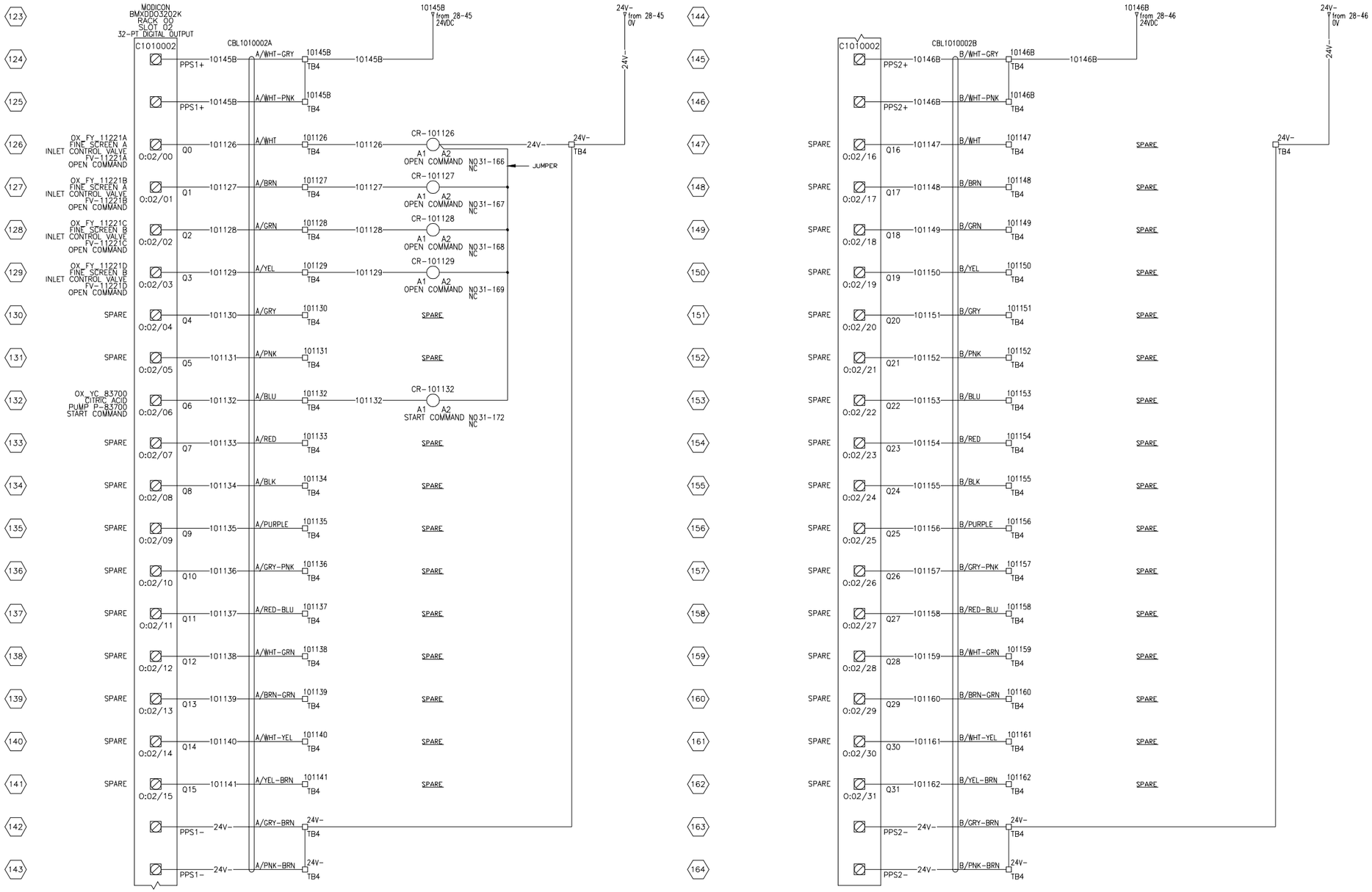

NOTE:

THE INFORMATION, SPECIFICATIONS AND DATA SHOWN ON THIS PRINT ARE FURNISHED BY AND ARE TO REMAIN THE PROPERTY OF H_2O INNOVATION.

THE PURPOSE OF THIS DOCUMENT IS TO FACILITATE THE INSTALLATION, MAINTENANCE AND OPERATION OF THE EQUIPMENT REPRESENTED BY SAID PRINT. NO OTHER USE OF THIS DOCUMENT SHALL BE MADE WITHOUT EXPRESS WRITTEN CONSENT FROM H_2O INNOVATION.

NO.	DATE	REVISION	DWN BY	ENGINEER	CHK'D BY
.00	29/07/2016	INITIAL VERSION	E.R.		

h2o innovation
knowledge to share.du savoir à partager

DWG TITLE
MELIADINE STP
CONTAINERIZED SEWAGE
TREATMENT PLANT
ELECTRICAL DRAWINGS

RIO-101
REMOTE I/O PANEL
DIGITAL OUTPUT

JOB NO
U65875

DWG NO
U65875-C03-RIO101-DO-01

SHEET NO
30 OF 35

REVISION
.00

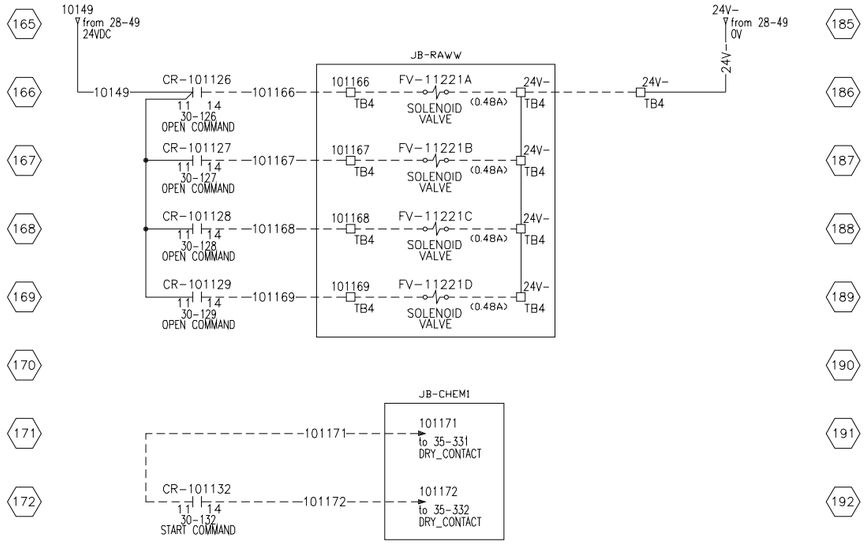

NOTE:

THE INFORMATION, SPECIFICATIONS AND DATA SHOWN ON THIS PRINT ARE FURNISHED BY AND ARE TO REMAIN THE PROPERTY OF H_2O INNOVATION.

THE PURPOSE OF THIS DOCUMENT IS TO FACILITATE THE INSTALLATION, MAINTENANCE AND OPERATION OF THE EQUIPMENT REPRESENTED BY SAID PRINT. NO OTHER USE OF THIS DOCUMENT SHALL BE MADE WITHOUT EXPRESS WRITTEN CONSENT FROM H_2O INNOVATION.

NO.	DATE	REVISION	DWN BY	ENGINEER	CHK'D BY
.00	29/07/2016	INITIAL VERSION	E.R.		

h2o innovation
knowledge to share du savoir à partager

DWG TITLE

MELIADINE STP
CONTAINERIZED SEWAGE
TREATMENT PLANT
ELECTRICAL DRAWINGS

RIO-101
REMOTE I/O PANEL
DIGITAL OUTPUT

JOB NO
U65875

DWG NO
U65875-C03-RIO101-DO-02

SHEET NO	REVISION
31 OF 35	.00

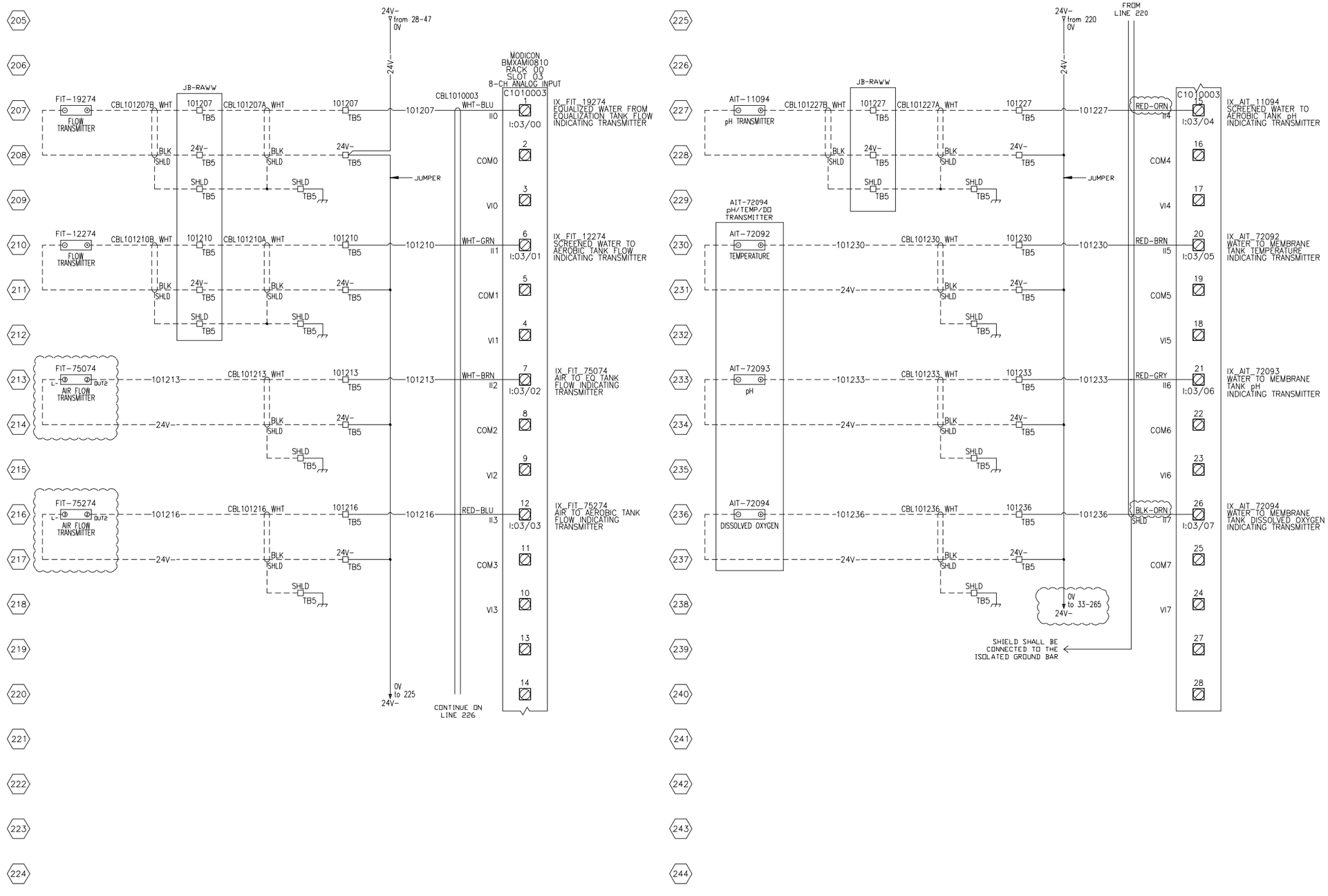

NOTE:

THE INFORMATION, SPECIFICATIONS AND DATA SHOWN ON THIS PRINT ARE FURNISHED BY AND ARE TO REMAIN THE PROPERTY OF H_2O INNOVATION.

THE PURPOSE OF THIS DOCUMENT IS TO FACILITATE THE INSTALLATION, MAINTENANCE AND OPERATION OF THE EQUIPMENT REPRESENTED BY SAID PRINT. NO OTHER USE OF THIS DOCUMENT SHALL BE MADE WITHOUT EXPRESS WRITTEN CONSENT FROM H_2O INNOVATION.

NO.	DATE	REVISION	DWN BY	CHK'D BY
.00	29/07/2016	INITIAL VERSION	E.R.	ENGINEER

h2o innovation
knowledge to share du savoir à partager

DWG TITLE
MELIADINE STP
CONTAINERIZED SEWAGE
TREATMENT PLANT
ELECTRICAL DRAWINGS

RIO-101
REMOTE I/O PANEL
ANALOG INPUT

JOB NO
U65875

DWG NO
U65875-C03-RIO101-AI-01

SHEET NO
32 OF 35

REVISION
.00

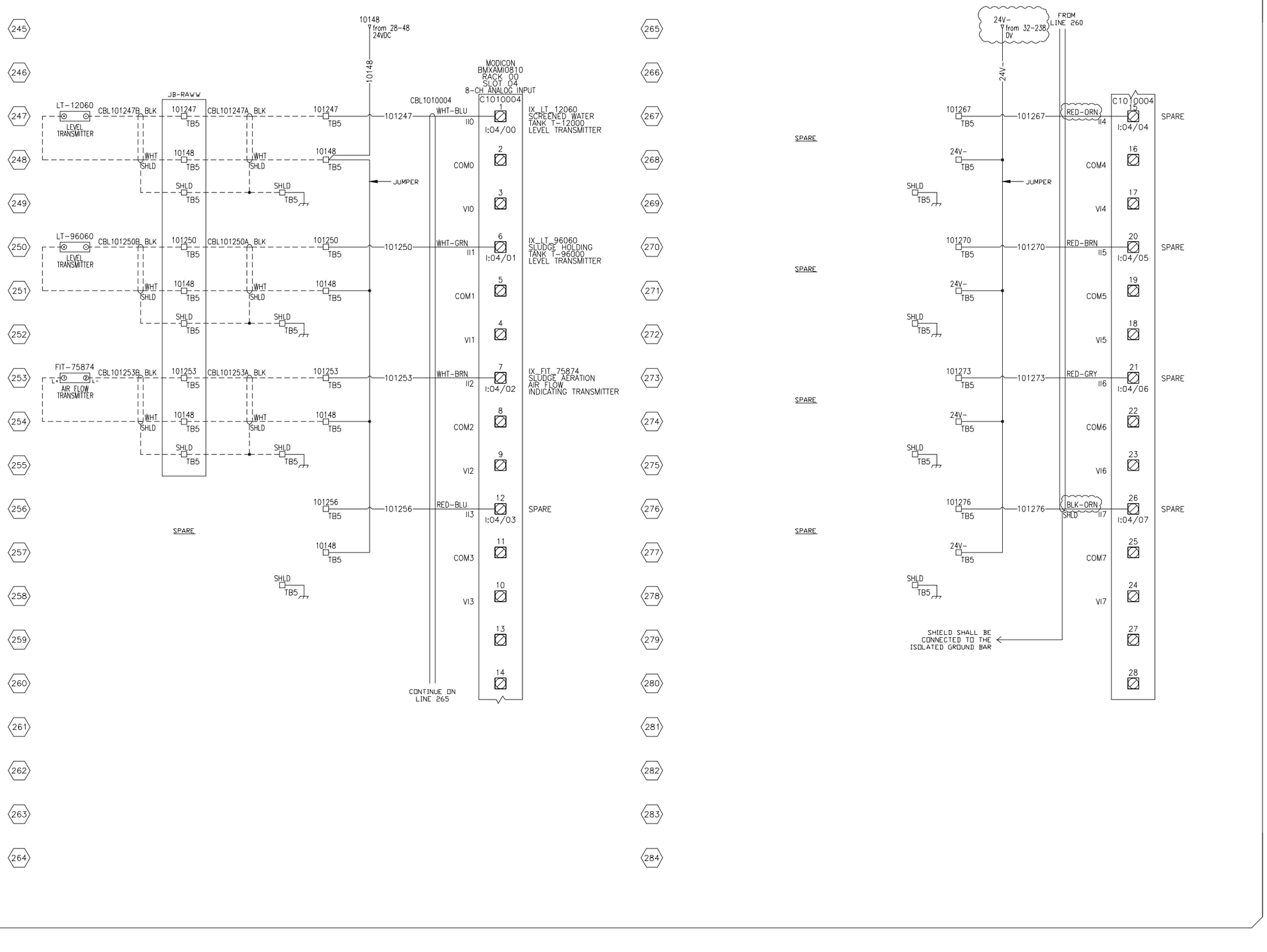

NOTE:

THE INFORMATION, SPECIFICATIONS AND DATA SHOWN ON THIS PRINT ARE FURNISHED BY AND ARE TO REMAIN THE PROPERTY OF H_2O INNOVATION.

THE PURPOSE OF THIS DOCUMENT IS TO FACILITATE THE INSTALLATION, MAINTENANCE AND OPERATION OF THE EQUIPMENT REPRESENTED BY SAID PRINT. NO OTHER USE OF THIS DOCUMENT SHALL BE MADE WITHOUT EXPRESS WRITTEN CONSENT FROM H_2O INNOVATION.

NO.	DATE	REVISION	DWN BY	ENGINEER	CHK'D BY
.00	29/07/2016	INITIAL VERSION	E.R.		

h2o innovation
knowledge to share du savoir à partager

DWG TITLE

MELIADINE STP
CONTAINERIZED SEWAGE
TREATMENT PLANT
ELECTRICAL DRAWINGS

RIO-101
REMOTE I/O PANEL
ANALOG INPUT

JOB NO: U65875

DWG NO: U65875-C03-RIO101-AI-02

SHEET NO: 33 OF 35

REVISION: .00

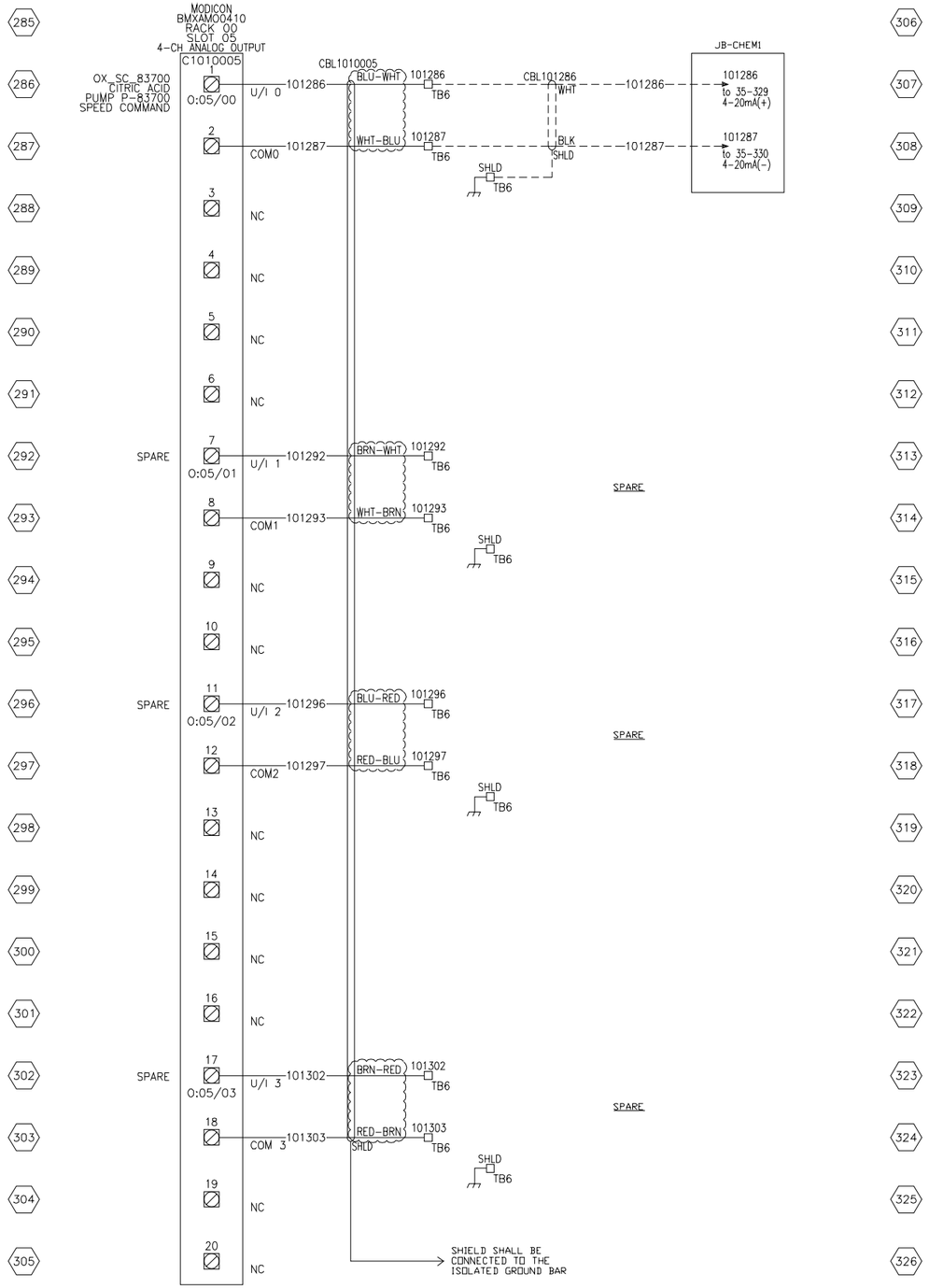

NOTE:

THE INFORMATION, SPECIFICATIONS AND DATA SHOWN ON THIS PRINT ARE FURNISHED BY AND ARE TO REMAIN THE PROPERTY OF H_2O INNOVATION.

THE PURPOSE OF THIS DOCUMENT IS TO FACILITATE THE INSTALLATION, MAINTENANCE AND OPERATION OF THE EQUIPMENT REPRESENTED BY SAID PRINT. NO OTHER USE OF THIS DOCUMENT SHALL BE MADE WITHOUT EXPRESS WRITTEN CONSENT FROM H_2O INNOVATION.

NO.	DATE	INITIAL VERSION / REVISION	DWN BY	ENGINEER	CHK'D BY
.00	29/07/2016	INITIAL VERSION	E.R.		

h2o innovation
knowledge to share du savoir à partager

DWG TITLE

MELIADINE STP
CONTAINERIZED SEWAGE
TREATMENT PLANT
ELECTRICAL DRAWINGS

RIO-101
REMOTE I/O PANEL
ANALOG OUTPUT

JOB NO: U65875

DWG NO: U65875-C03-RIO101-AO-01

SHEET NO: 34 OF 35

REVISION: .00

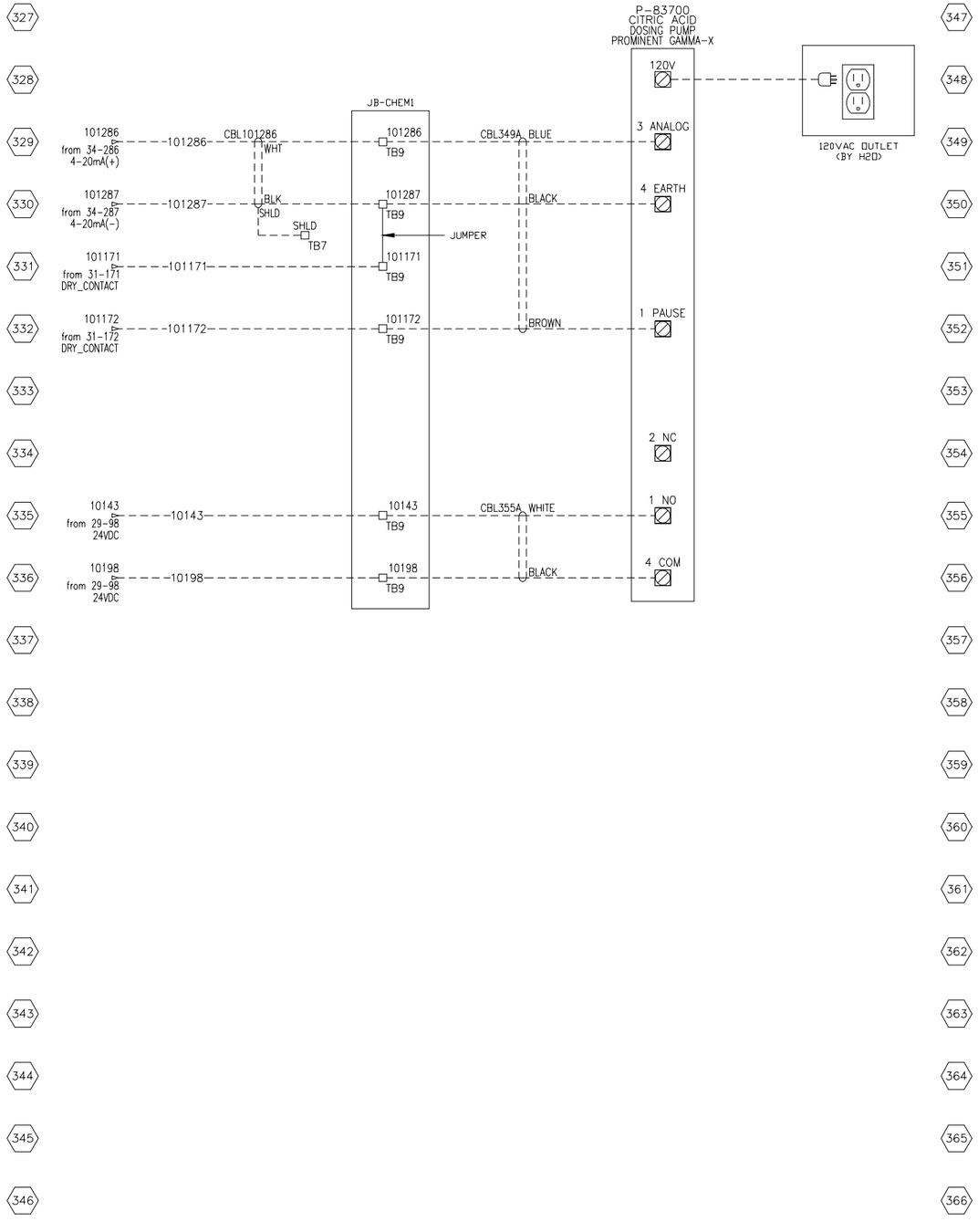

NOTE:

THE INFORMATION, SPECIFICATIONS AND DATA SHOWN ON THIS PRINT ARE FURNISHED BY AND ARE TO REMAIN THE PROPERTY OF H_2O INNOVATION.

THE PURPOSE OF THIS DOCUMENT IS TO FACILITATE THE INSTALLATION, MAINTENANCE AND OPERATION OF THE EQUIPMENT REPRESENTED BY SAID PRINT. NO OTHER USE OF THIS DOCUMENT SHALL BE MADE WITHOUT EXPRESS WRITTEN CONSENT FROM H_2O INNOVATION.

NO.	DATE	REVISION	DWN BY	ENGINEER	CHK'D BY
.00	29/07/2016	INITIAL VERSION	E.R.		

h2o innovation
knowledge to share du savoir à partager

DWG TITLE

MELIADINE STP
CONTAINERIZED SEWAGE
TREATMENT PLANT
ELECTRICAL DRAWINGS

JB-CHEM1
DOSING PUMP
JUNCTION BOX

JOB NO
U65875

DWG NO
U65875-C03-RIO101-DOSING

SHEET NO	REVISION
35 OF 35	.00

9.9 - SINGLE LINE DIAGRAM

MELIADINE STP

CONTAINERIZED SEWAGE TREATMENT PLANT

C02 SINGLE LINE DIAGRAM

NOTE:

THE INFORMATION, SPECIFICATIONS AND DATA SHOWN ON THIS PRINT ARE FURNISHED BY AND ARE TO REMAIN THE PROPERTY OF H_2O INNOVATION.

THE PURPOSE OF THIS DOCUMENT IS TO FACILITATE THE INSTALLATION, MAINTENANCE AND OPERATION OF THE EQUIPMENT REPRESENTED BY SAID PRINT. NO OTHER USE OF THIS DOCUMENT SHALL BE MADE WITHOUT EXPRESS WRITTEN CONSENT FROM H_2O INNOVATION.

NO.	DATE	REVISION	DWN BY	ENGINEER	CHK'D BY
.00	01/08/2016	INITIAL VERSION	E.R.		

h2o innovation
knowledge to share // savoir à partager

DWG TITLE

MELIADINE STP
CONTAINERIZED SEWAGE
TREATMENT PLANT
SINGLE LINE DIAGRAM

TITLE

JOB NO
U65875

DWG NO
U65875-C02-TITLE

SHEET NO	REVISION
1 OF 4	.00

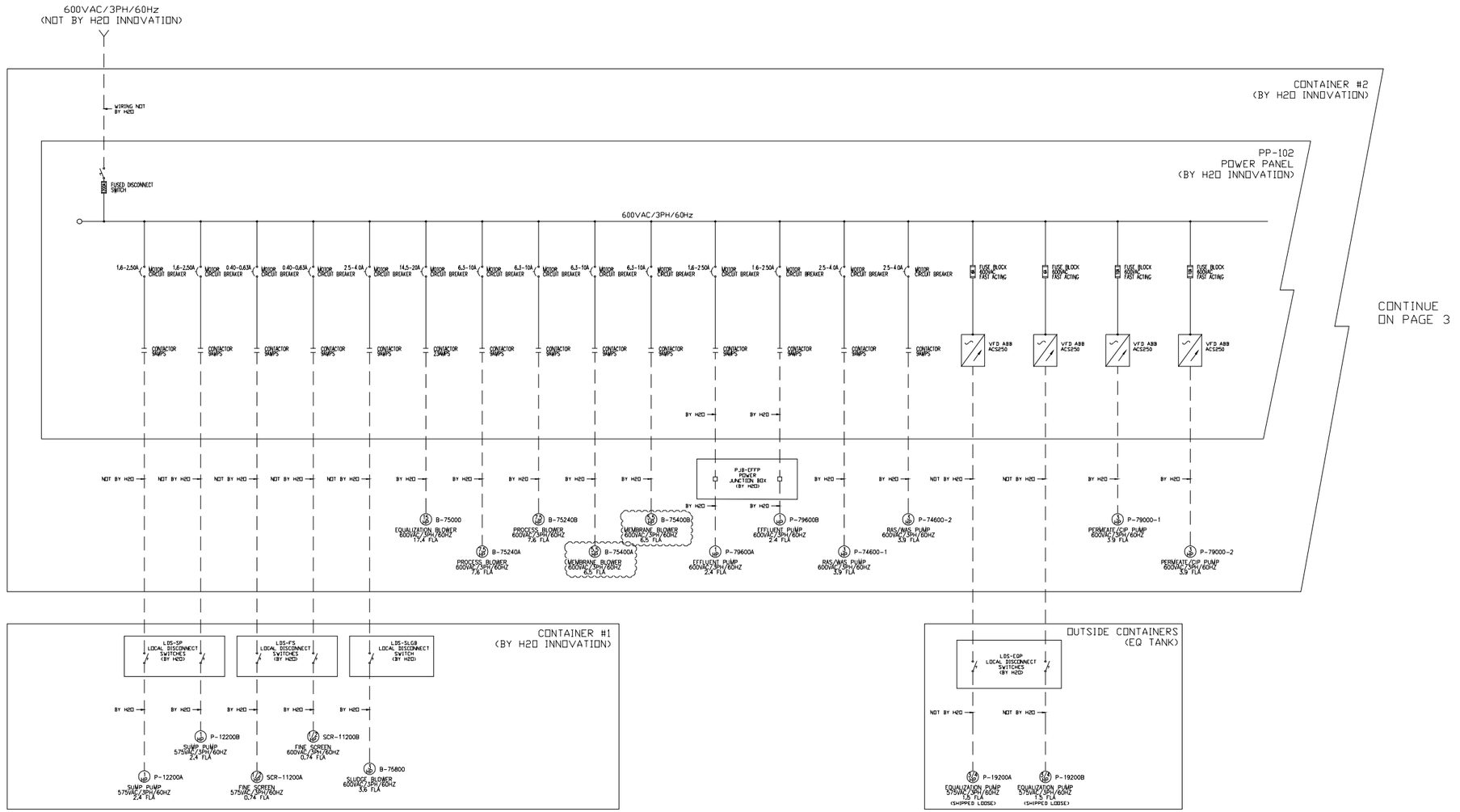

LEGEND

- TRANSFORMER
- FUSE
- SC CAPACITOR
- LA LIGHTNING ARRESTOR
- CIRCUIT BREAKER
- CONTACTOR
- SS SOFT START
- VARIABLE FREQUENCY DRIVE
- T THERMOSTAT
- DISCONNECT SWITCH
- FUSED DISCONNECT SWITCH
- RECEPTACLE
- ELECTRICAL MOTOR (NO / NC)
- HEATER
- FAN
- DOSING PUMP
- LIGHT

NOTE:

THE INFORMATION, SPECIFICATIONS AND DATA SHOWN ON THIS PRINT ARE FURNISHED BY AND ARE TO REMAIN THE PROPERTY OF H_2O INNOVATION.

THE PURPOSE OF THIS DOCUMENT IS TO FACILITATE THE INSTALLATION, MAINTENANCE AND OPERATION OF THE EQUIPMENT REPRESENTED BY SAID PRINT. NO OTHER USE OF THIS DOCUMENT SHALL BE MADE WITHOUT EXPRESS WRITTEN CONSENT FROM H_2O INNOVATION.

NO.	DATE	REVISION	DWN BY	ENGINEER	CHK'D BY
.00	01/08/2016	INITIAL VERSION	E.R.		

h2o innovation
knowledge to share, do, savoir à partager

DWG TITLE
MELIADINE STP
CONTAINERIZED SEWAGE
TREATMENT PLANT
SINGLE LINE DIAGRAM

PP-102
POWER PANEL
POWER DISTRIBUTION

JOB NO
U65875

DWG NO
U65875-C02-01-01

SHEET NO	REVISION
2 OF 4	.00

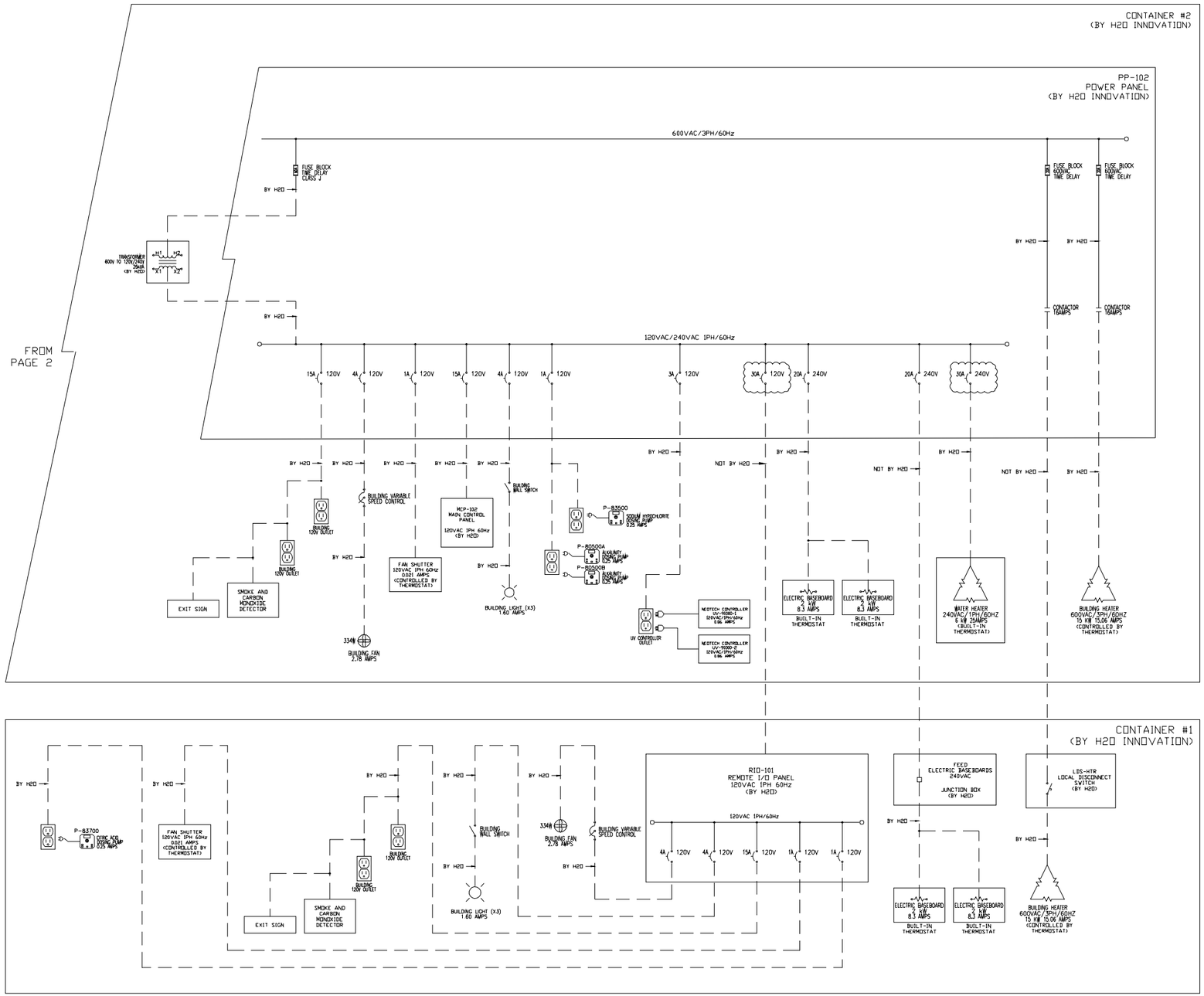

LEGEND

- TRANSFORMER
- FUSE
- CAPACITOR
- LIGHTNING ARRESTOR
- CIRCUIT BREAKER
- CONTACTOR
- SOFT START
- VARIABLE FREQUENCY DRIVE
- THERMOSTAT
- DISCONNECT SWITCH
- FUSED DISCONNECT SWITCH
- RECEPTACLE
- ELECTRICAL MOTOR
- HEATER
- FAN
- DOSING PUMP
- LIGHT

NOTE:

THE INFORMATION, SPECIFICATIONS AND DATA SHOWN ON THIS PRINT ARE FURNISHED BY AND ARE TO REMAIN THE PROPERTY OF H_2O INNOVATION.

THE PURPOSE OF THIS DOCUMENT IS TO FACILITATE THE INSTALLATION, MAINTENANCE AND OPERATION OF THE EQUIPMENT REPRESENTED BY SAID PRINT. NO OTHER USE OF THIS DOCUMENT SHALL BE MADE WITHOUT EXPRESS WRITTEN CONSENT FROM H_2O INNOVATION.

NO.	DATE (Month/Day)	REVISION	DWN BY	ENGINEER	CHK'D BY
.00	01/08/2016	INITIAL VERSION	E.R.		

h2o innovation
knowledge to share.du savoir à partager

DWG TITLE

MELIADINE STP
CONTAINERIZED SEWAGE
TREATMENT PLANT
SINGLE LINE DIAGRAM

PP-102
POWER PANEL
POWER DISTRIBUTION

JOB NO
U65875

DWG NO
U65875-C02-01-02

SHEET NO
3 OF 4

REVISION
.00

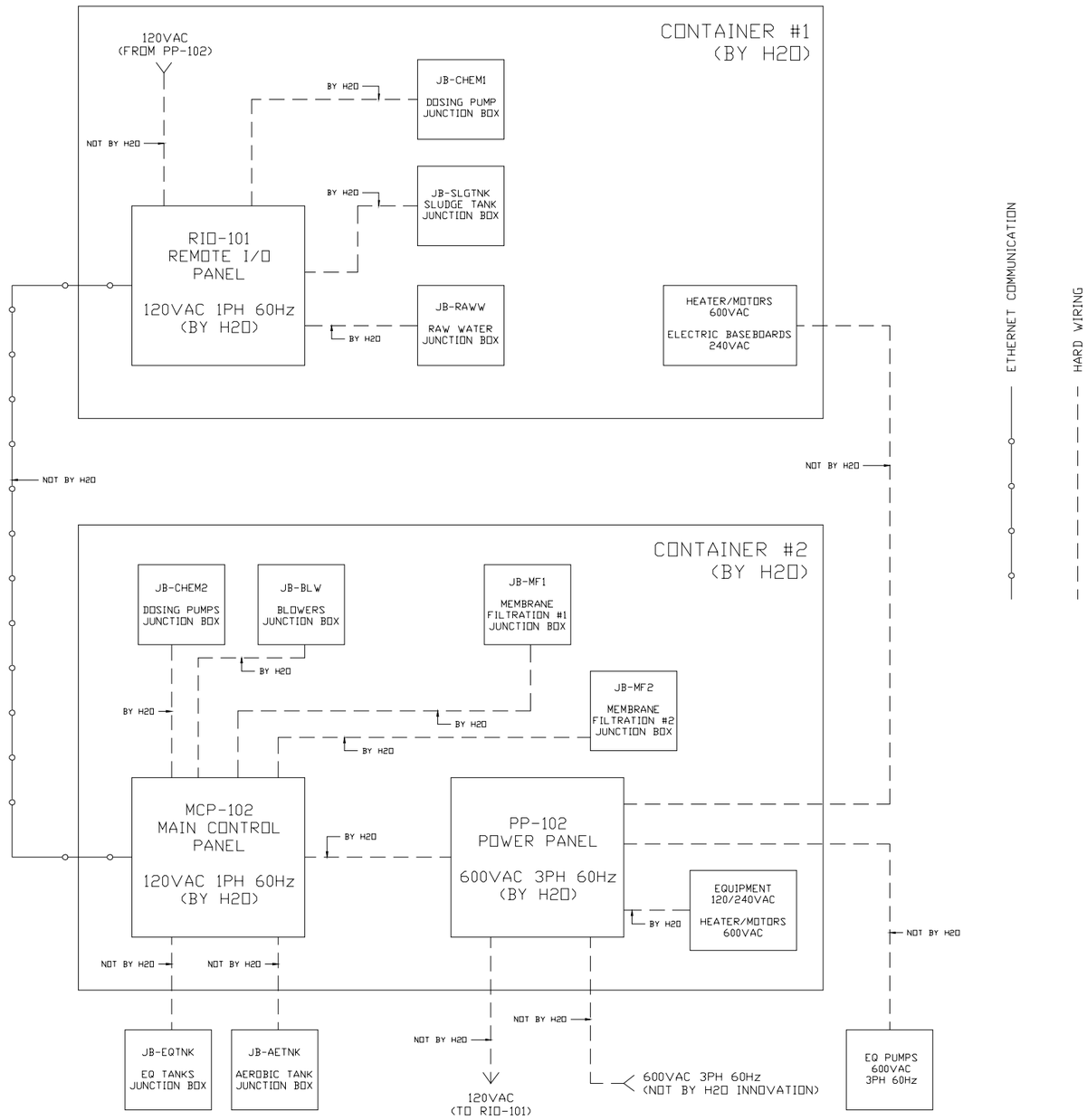

LEGEND

- TRANSFORMER
- FUSE
- SC — CAPACITOR
- LA — LIGHTNING ARRESTOR
- CIRCUIT BREAKER
- CONTACTOR
- SS — SOFT START
- VARIABLE FREQUENCY DRIVE
- T — THERMOSTAT
- DISCONNECT SWITCH
- FUSED DISCONNECT SWITCH
- RECEPTACLE
- NO NC — ELECTRICAL MOTOR
- HEATER
- FAN
- DOSING PUMP
- LIGHT

NOTE:

THE INFORMATION, SPECIFICATIONS AND DATA SHOWN ON THIS PRINT ARE FURNISHED BY AND ARE TO REMAIN THE PROPERTY OF H_2O INNOVATION.

THE PURPOSE OF THIS DOCUMENT IS TO FACILITATE THE INSTALLATION, MAINTENANCE AND OPERATION OF THE EQUIPMENT REPRESENTED BY SAID PRINT. NO OTHER USE OF THIS DOCUMENT SHALL BE MADE WITHOUT EXPRESS WRITTEN CONSENT FROM H_2O INNOVATION.

NO.	DATE	REVISION	DWN BY	ENGINEER	CHK'D BY
.00	01/08/2016	INITIAL VERSION	E.R.		

h2o innovation
knowledge to share.du savoir à partager

DWG TITLE
MELIADINE STP
CONTAINERIZED SEWAGE
TREATMENT PLANT
SINGLE LINE DIAGRAM

INTERCONNECTION
WIRING

JOB NO
U65875

DWG NO
U65875-C02-01-03

SHEET NO
4 OF 4

REVISION
.00

9.10 - CONTROL PANEL DRAWINGS

MELIADINE STP

CONTAINERIZED SEWAGE TREATMENT PLANT

E02 ELECTRICAL PANEL DRAWINGS

NOTE:

THE INFORMATION, SPECIFICATIONS AND DATA SHOWN ON THIS PRINT ARE FURNISHED BY AND ARE TO REMAIN THE PROPERTY OF H_2O INNOVATION.

THE PURPOSE OF THIS DOCUMENT IS TO FACILITATE THE INSTALLATION, MAINTENANCE AND OPERATION OF THE EQUIPMENT REPRESENTED BY SAID PRINT. NO OTHER USE OF THIS DOCUMENT SHALL BE MADE WITHOUT EXPRESS WRITTEN CONSENT FROM H_2O INNOVATION.

NO.	DATE	REVISION	DWN BY	ENGINEER	CHK'D BY
.00	29/07/2016	INITIAL VERSION	E.R.		

h2o innovation
knowledge to share // savoir à partager

DWG TITLE
MELIADINE STP
CONTAINERIZED SEWAGE
TREATMENT PLANT
ELECTRICAL DRAWINGS

TITLE

JOB NO
U65875

DWG NO
U65875-E02-TITLE

SHEET NO
1 OF 25

REVISION
.00

DRAWING #	DESCRIPTION 1	DESCRIPTION 2	DESCRIPTION 3	SHEET #
U65875-E02-TITLE		TITLE		1
U65875-E02-INDEX		INDEX		2
U65875-E02-PP102-PL	PP-102	POWER PANEL	PANEL LAYOUT	3
U65875-E02-PP102-BOM	PP-102	POWER PANEL	BILL OF MATERIAL	4
U65875-E02-PP102-TAG	PP-102	POWER PANEL	LAMICOID TAG	5
U65875-E02-MCP102-PL	MCP-102	MAIN CONTROL PANEL	PANEL LAYOUT	6
U65875-E02-MCP102-BOM	MCP-102	MAIN CONTROL PANEL	BILL OF MATERIAL	7
U65875-E02-MCP102-TAG	MCP-102	MAIN CONTROL PANEL	LAMICOID TAG	8
U65875-E02-RIO101-PL	RIO-101	REMOTE I/O PANEL	PANEL LAYOUT	9
U65875-E02-RIO101-BOM	RIO-101	REMOTE I/O PANEL	BILL OF MATERIAL	10
U65875-E02-RIO101-TAG	RIO-101	REMOTE I/O PANEL	LAMICOID TAG	11
U65875-E02-LDSEQP-PL	LDS-EQP	LOCAL DISCONNECT SWITCH	PANEL LAYOUT	12
U65875-E02-LDSSP-PL	LDS-SP	LOCAL DISCONNECT SWITCH	PANEL LAYOUT	13
U65875-E02-LDSFS-PL	LDS-FS	LOCAL DISCONNECT SWITCH	PANEL LAYOUT	14
U65875-E02-LDSSLGB-PL	LDS-SLGB	LOCAL DISCONNECT SWITCH	PANEL LAYOUT	15
U65875-E02-LDSHTR-PL	LDS-HTR	LOCAL DISCONNECT SWITCH	PANEL LAYOUT	16
U65875-E02-PJBEFFP-PL	PJB-EFFP	POWER JUNCTION BOX	PANEL LAYOUT	17
U65875-E02-JBMF1-PL	JB-MF1	JUNCTION BOX	PANEL LAYOUT	18
U65875-E02-JBMF2-PL	JB-MF2	JUNCTION BOX	PANEL LAYOUT	19
U65875-E02-JBBLW-PL	JB-BLW	JUNCTION BOX	PANEL LAYOUT	20
U65875-E02-JBRAWW-PL	JB-RAWW	JUNCTION BOX	PANEL LAYOUT	21
U65875-E02-JBEQTNK-PL	JB-EQTNK	JUNCTION BOX	PANEL LAYOUT	22
U65875-E02-JBAETNK-PL	JB-AETNK	JUNCTION BOX	PANEL LAYOUT	23
U65875-E02-JBCHEM1-PL	JB-CHEM1	JUNCTION BOX	PANEL LAYOUT	24
U65875-E02-JBCHEM2-PL	JB-CHEM2	JUNCTION BOX	PANEL LAYOUT	25

NOTE:

THE INFORMATION, SPECIFICATIONS AND DATA SHOWN ON THIS PRINT ARE FURNISHED BY AND ARE TO REMAIN THE PROPERTY OF H_2O INNOVATION.

THE PURPOSE OF THIS DOCUMENT IS TO FACILITATE THE INSTALLATION, MAINTENANCE AND OPERATION OF THE EQUIPMENT REPRESENTED BY SAID PRINT. NO OTHER USE OF THIS DOCUMENT SHALL BE MADE WITHOUT EXPRESS WRITTEN CONSENT FROM H_2O INNOVATION.

NO.	DATE	REVISION	DWN BY	ENGINEER	CHK'D BY
.00	29/07/2016	INITIAL VERSION	E.R.		

h2o innovation
knowledge to share du savoir à partager

DWG TITLE
MELIADINE STP
CONTAINERIZED SEWAGE
TREATMENT PLANT
ELECTRICAL DRAWINGS

INDEX

JOB NO: U65875

DWG NO: U65875-E02-INDEX

SHEET NO: 2 OF 25

REVISION: .00

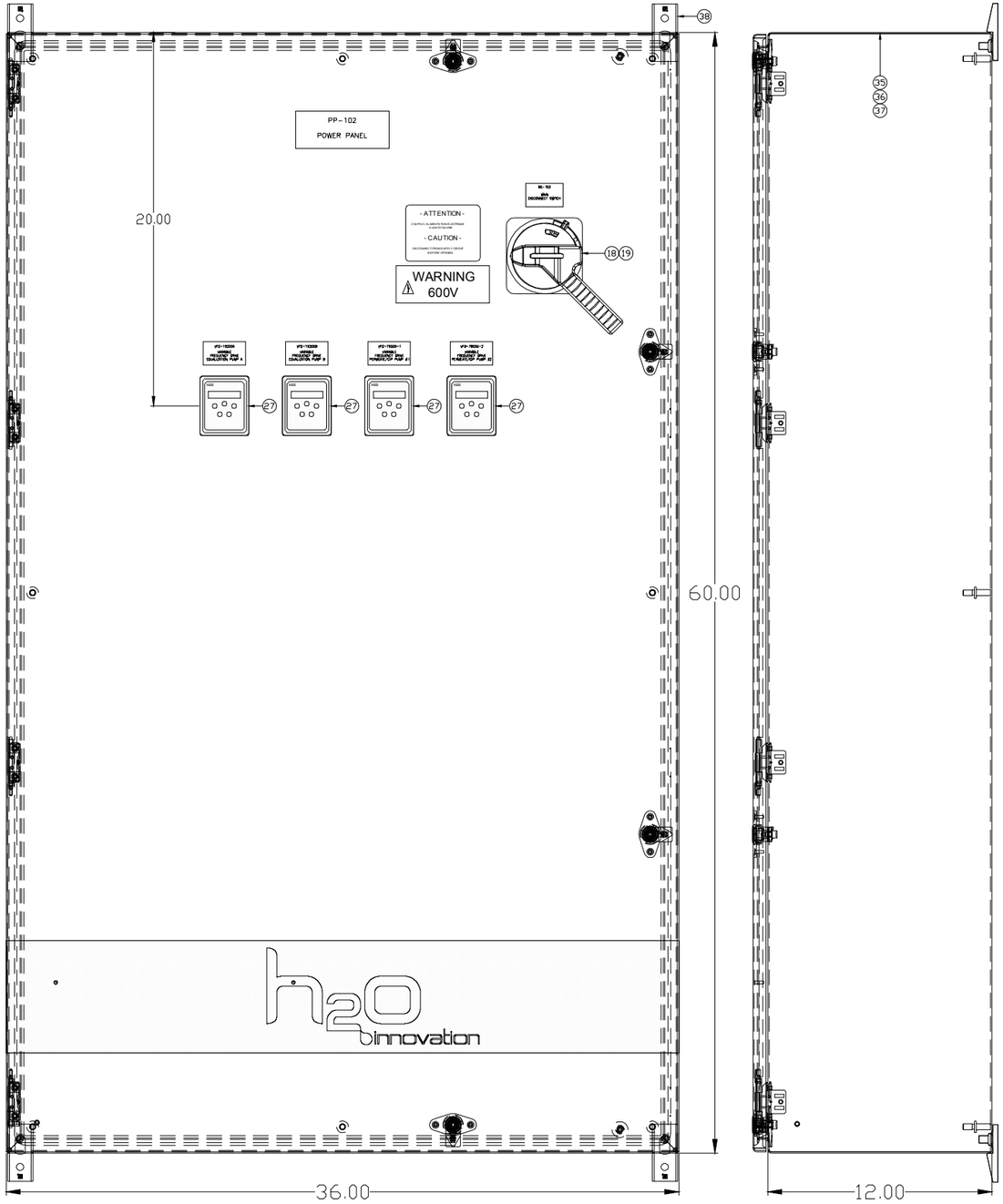

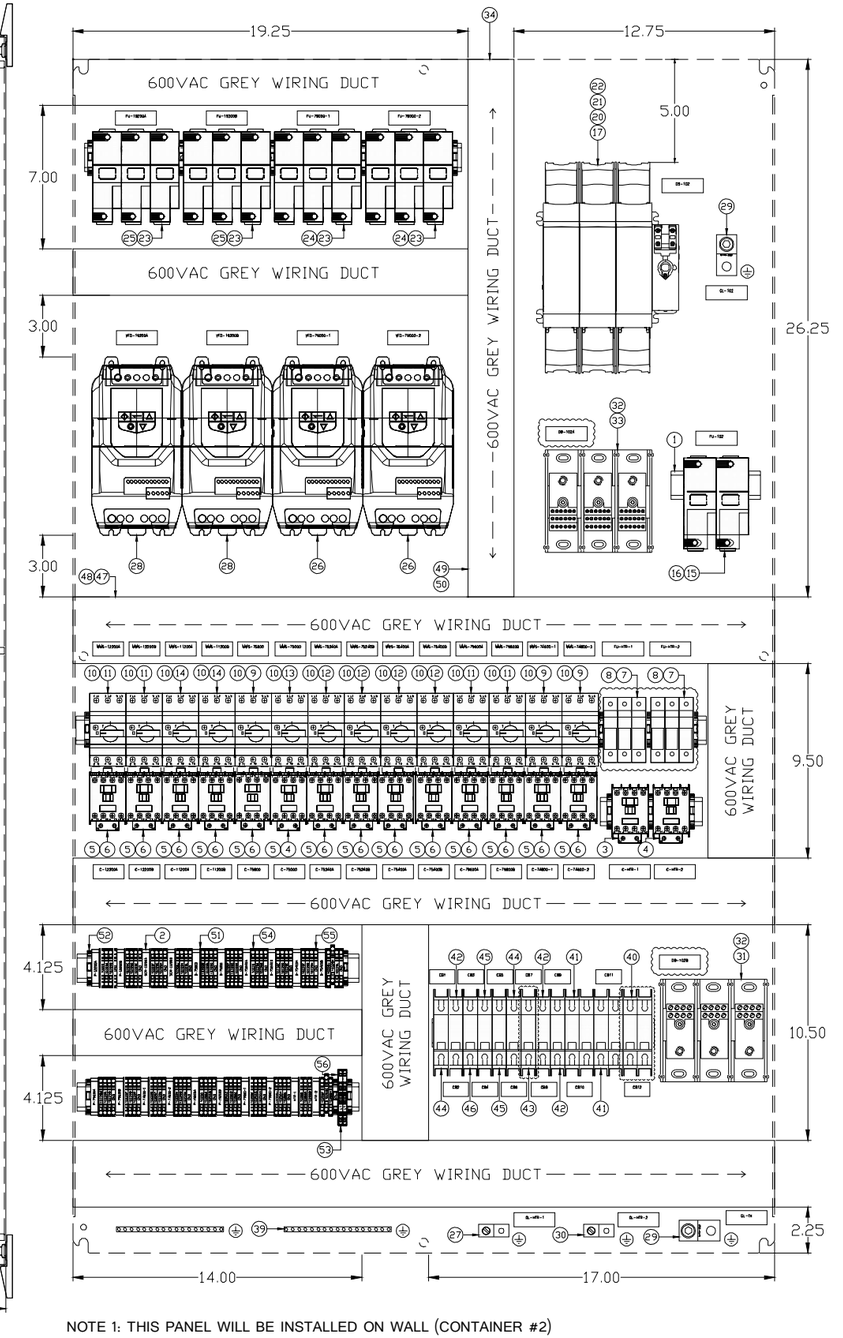

NOTE 1: THIS PANEL WILL BE INSTALLED ON WALL (CONTAINER #2)

NOTE 2: ALL CONNECTIONS WILL BE THROUGH THE BOTTOM

NOTE 3: THIS PANEL APPROX. WEIGHT 300 LBS

NOTE:

THE INFORMATION, SPECIFICATIONS AND DATA SHOWN ON THIS PRINT ARE FURNISHED BY AND ARE TO REMAIN THE PROPERTY OF H_2O INNOVATION.

THE PURPOSE OF THIS DOCUMENT IS TO FACILITATE THE INSTALLATION, MAINTENANCE AND OPERATION OF THE EQUIPMENT REPRESENTED BY SAID PRINT. NO OTHER USE OF THIS DOCUMENT SHALL BE MADE WITHOUT EXPRESS WRITTEN CONSENT FROM H_2O INNOVATION.

NO.	DATE		CHK'D BY
.00	29/07/2016	INITIAL VERSION	ENGINEER
		REVISION	DWN BY
			E.R.

h2o innovation
knowledge to share du savoir à partager

DWG TITLE
MELIADINE STP
CONTAINERIZED SEWAGE TREATMENT PLANT
ELECTRICAL DRAWINGS

PP-102
POWER PANEL
PANEL LAYOUT

JOB NO
U65875

DWG NO
U65875-E02-PP102-PL

SHEET NO	REVISION
3 OF 25	.00

ITEM	QTY	SUB	CATALOG	MFG	DESCRIPTION
1	7		199-DR1	AB	TRACK 35mmX7.5mmX1219mm
2	20		1492-GM35	AB	GROUP MARKING CARRIER
3	2		100-C16D10	AB	100-C CONTACTOR, 3-POLE, 16A, 1 N.O. CONTACT
4	1	*1	100-C23D10	AB	100-C CONTACTOR, 3-POLE, 23A, 1 N.O. CONTACT
5		*1	140M-C-PEC23	AB	ECO CONNECTING MODULE, 25A
6	13	*1	100-C09D10	AB	100-C CONTACTOR, 3-POLE, 9A, 1 N.O. CONTACT
5		*1	140M-C-PEC23	AB	ECO CONNECTING MODULE, 25A
7	2	*1	1492-FB3C30	AB	3 POLE FUSE BLOCK, 30AMPS - CLASS CC
8		*6	ATQR20	FERRAZ	FUSE - CLASS CC, 20AMPS
9	3	*1	140M-C2E-B40	AB	IEC MOTOR PROTECTION CIRCUIT BREAKER, STANDARD MAGNETIC TRIP, 140M (C-FRAME)
10		*1	140M-C-AFA11	AB	FRONT-MOUNTED AUXILIARY CONTACT - 1N.O-1N.C.
11	4	*1	140M-C2E-B25	AB	IEC MOTOR PROTECTION CIRCUIT BREAKER, STANDARD MAGNETIC TRIP, 140M (C-FRAME)
10		*1	140M-C-AFA11	AB	FRONT-MOUNTED AUXILIARY CONTACT - 1N.O-1N.C.
12	4	*1	140M-C2E-C10	AB	IEC MOTOR PROTECTION CIRCUIT BREAKER, STANDARD MAGNETIC TRIP, 140M (C-FRAME)
10		*1	140M-C-AFA11	AB	FRONT-MOUNTED AUXILIARY CONTACT - 1N.O-1N.C.
13	1	*1	140M-C2E-C20	AB	IEC MOTOR PROTECTION CIRCUIT BREAKER, STANDARD MAGNETIC TRIP, 140M (C-FRAME)
10		*1	140M-C-AFA11	AB	FRONT-MOUNTED AUXILIARY CONTACT - 1N.O-1N.C.
14	2	*1	140M-C2E-B10	AB	IEC MOTOR PROTECTION CIRCUIT BREAKER, STANDARD MAGNETIC TRIP, 140M (C-FRAME)
10		*1	140M-C-AFA11	AB	FRONT-MOUNTED AUXILIARY CONTACT - 1N.O-1N.C.
15	1	*1	1492-FB2J60	AB	2 POLE FUSE BLOCK, 60AMPS - CLASS J
16		*2	AJT60	FERRAZ	FUSE - CLASS J, 60AMPS
17	1	*1	194R-J200-1753	AB	194R NEXT GENERATION DISCONNECT SWITCH, FUSE TYPE J, OPEN STYLE, 200A, 3 POLE
18		*1	194R-HM4E	AB	PADLOCKABLE HANDLE NEMA 4X RED/YELLOW
19		*1	194R-R7	AB	OPERATING SHAFT 12 INCHES
20		*3	AJT200	FERRAZ	FUSE - CLASS J, 200AMPS
21		*2	194R-TL1	AB	LUG KITS FOR FUSED AND NON-FUSED DISCONNECT SWITCH, 100-200A
22		*2	194R-LNC31	AB	FINGER SAFE COVER KITS FOR FUSED DISCONNECT SWITCH, 200A, FRAME F6
23	2	*1	1492-FB3J30	AB	3 POLE FUSE BLOCK, 30AMPS - CLASS J
24		*6	HSJ10	FERRAZ	FUSE HIGH SPEED/CLASS J, 10AMPS
23	2	*1	1492-FB3J30	AB	3 POLE FUSE BLOCK, 30AMPS - CLASS J
25		*6	HSJ6	FERRAZ	FUSE HIGH SPEED/CLASS J, 6AMPS
26	2	*1	ACS250-03U-04A1-6	ABB	AJUSTABLE FREQUENCY AC DRIVE, 600VAC, 3HP, IP20
27		*1	RCRP-01	ABB	PANEL MOUNT REMOTE KEYPAD FOR ACS250 DRIVES
28	2	*1	ACS250-03U-02A1-6	ABB	AJUSTABLE FREQUENCY AC DRIVE, 600VAC, 1HP, IP20
27		*1	RCRP-01	ABB	PANEL MOUNT REMOTE KEYPAD FOR ACS250 DRIVES
29	2		ADR25	BLACKBURN	ALUMINUM GROUND LUG, 6AWG-250KCMIL
30	2		ADR21	BLACKBURN	ALUMINUM GROUND LUG, 14-2/0AWG
31	1	*1	MPDB67633	FERRAZ	ALUMINIUM DISTRIBUTION BLOCK, 3POLE, 8 OPENINGS PER POLE, 250AMPS
32		*3	MPDBC6667	FERRAZ	PLASTIC HINGED SAFETY COVER FOR MPDB67 SERIES
33	1	*1	MPDB67493	FERRAZ	ALUMINIUM DISTRIBUTION BLOCK, 3POLE, 18 OPENINGS PER POLE, 310AMPS
32		*3	MPDBC6667	FERRAZ	PLASTIC HINGED SAFETY COVER FOR MPDB67 SERIES
34	1		CP6036	HOFFMAN	BACK PLATE 60X36
35	1	*1	CSD603612SSR	HOFFMAN	CONCEPT WALL-MOUNT ENCLOSURE 60X36X12 STAINLESS STEEL
36		*1	AGS808	HOFFMAN	GROUND STRAP
37		*1	ADP2	HOFFMAN	THERMOPLASTIC DATA POCKET 12X12
38	1		CMFKSS	HOFFMAN	STAINLESS STEEL MOUNTING BRACKET KIT
39	2		N-174-AS	ILSCO	GROUND BAR COOPER
40	1		60149	SCHNEIDER	2 POLE THERMAL MAGNETIC CIRCUIT BREAKER, 30A
41	2		60147	SCHNEIDER	2 POLE THERMAL MAGNETIC CIRCUIT BREAKER, 20A
42	3		60101	SCHNEIDER	1 POLE THERMAL MAGNETIC CIRCUIT BREAKER, 1A
43	2		60115	SCHNEIDER	1 POLE THERMAL MAGNETIC CIRCUIT BREAKER, 30A
44	2		60112	SCHNEIDER	1 POLE THERMAL MAGNETIC CIRCUIT BREAKER, 15A
45	2		60105	SCHNEIDER	1 POLE THERMAL MAGNETIC CIRCUIT BREAKER, 4A
46	1		60104	SCHNEIDER	1 POLE THERMAL MAGNETIC CIRCUIT BREAKER, 3A
47	1	*1	TY3X3NPG6	THOMAS & BETTS	WIRING DUCT 3X3" GRAY
48		*1	TY3CPG6	THOMAS & BETTS	WIRING DUCT COVER 3" GRAY
49	1	*1	TY2X3NPG6	THOMAS & BETTS	WIRING DUCT 2X3" GRAY
50		*1	TY2CPG6	THOMAS & BETTS	WIRING DUCT COVER 2" GRAY
51	20		2002-1292	WAGO	FEED-TROUGH END BARRIER FOR 2002-1201 TERMINAL BLOCK
52	17		249-116	WAGO	SCREWLESS END RETAINER
53	2		2002-2201	WAGO	DOUBLE DECK SPRING CLAMP TERMINAL BLOCK, GRAY
54	60		2002-1201	WAGO	SINGLE DECK SPRING CLAMP TERMINAL BLOCK, GRAY
55	18		2002-1207	WAGO	SPRING CLAMP GROUND TERMINAL BLOCK, GREEN/YELLOW
56	1		2002-2292	WAGO	FEED-TROUGH END BARRIER FOR 2002-2201 TERMINAL BLOCK

NOTE:

THE INFORMATION, SPECIFICATIONS AND DATA SHOWN ON THIS PRINT ARE FURNISHED BY AND ARE TO REMAIN THE PROPERTY OF H_2O INNOVATION.

THE PURPOSE OF THIS DOCUMENT IS TO FACILITATE THE INSTALLATION, MAINTENANCE AND OPERATION OF THE EQUIPMENT REPRESENTED BY SAID PRINT. NO OTHER USE OF THIS DOCUMENT SHALL BE MADE WITHOUT EXPRESS WRITTEN CONSENT FROM H_2O INNOVATION.

NO.	DATE	REVISION	DWN BY	ENGINEER	CHK'D BY
.00	29/07/2016	INITIAL VERSION	E.R.		

h2o innovation
knowledge to share as clever is perhaps

DWG TITLE
MELIADINE STP
CONTAINERIZED SEWAGE TREATMENT PLANT
ELECTRICAL DRAWINGS

PP-102
POWER PANEL
BILL OF MATERIAL

JOB NO: U65875

DWG NO: U65875-E02-PP102-BOM

SHEET NO: 4 OF 25

REVISION: .00

ENCLOSURE DOOR IDENTIFICATION

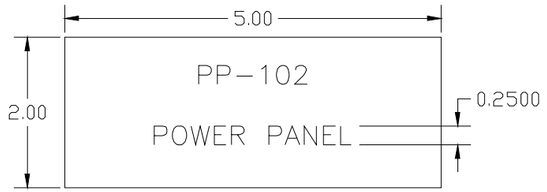

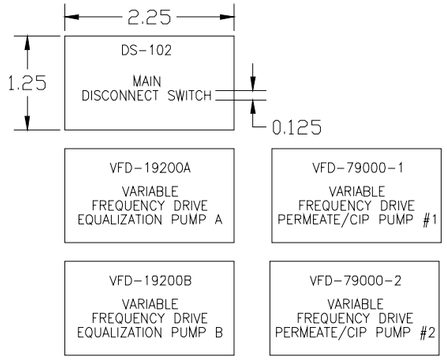

NOTE 1: ADHESIVE BACKED LAMINATED PLASTIC

NOTE 2: BLACK LETTERING ON WHITE BACKGROUND

NOTE 3: THICKNESS 1/16"

INSIDE PANEL IDENTIFICATION

FU-19200A	GL-HTR-2	C-79600B	MMS-79600A	CB5	B-75240A
FU-19200B	GL-TX	C-74600-1	MMS-79600B	CB6	B-75240B
FU-79000-1	C-12200A	C-74600-2	MMS-74600-1	CB7	B-75400A
FU-79000-2	C-12200B	MMS-12200A	MMS-74600-2	CB8	B-75400B
VFD-19200A	C-11200A	MMS-12200B	FU-HTR-1	CB9	P-79600A
VFD-19200B	C-11200B	MMS-11200A	FU-HTR-2	CB10	P-79600B
VFD-79000-1	C-75800	MMS-11200B	C-HTR-1	CB11	P-74600-1
VFD-79000-2	C-75000	MMS-75800	C-HTR-2	CB12	P-74600-2
DS-102	C-75240A	MMS-75000	DB-102B	P-12200A	P-19200A
GL-102	C-75240B	MMS-75240A	CB1	P-12200B	P-19200B
DB-102A	C-75400A	MMS-75240B	CB2	SCR-11200A	P-79000-1
FU-102	C-75400B	MMS-75400A	CB3	SCR-11200B	P-79000-2
GL-HTR-1	C-79600A	MMS-75400B	CB4	B-75800	HTR-1
				B-75000	HTR-2

NOTE:

THE INFORMATION, SPECIFICATIONS AND DATA SHOWN ON THIS PRINT ARE FURNISHED BY AND ARE TO REMAIN THE PROPERTY OF H_2O INNOVATION.

THE PURPOSE OF THIS DOCUMENT IS TO FACILITATE THE INSTALLATION, MAINTENANCE AND OPERATION OF THE EQUIPMENT REPRESENTED BY SAID PRINT. NO OTHER USE OF THIS DOCUMENT SHALL BE MADE WITHOUT EXPRESS WRITTEN CONSENT FROM H_2O INNOVATION.

NO.	DATE		DWN BY	ENGINEER	CHK'D BY
.00	29/07/2016	INITIAL VERSION	E.R.		
		REVISION			

h2o innovation
knowledge to share du savoir à partager

DWG TITLE

MELIADINE STP
CONTAINERIZED SEWAGE
TREATMENT PLANT
ELECTRICAL DRAWINGS

PP-102
POWER PANEL
LAMICOID TAG

JOB NO: U65875

DWG NO: U65875-E02-PP102-TAG

SHEET NO: 5 OF 25

REVISION: .00

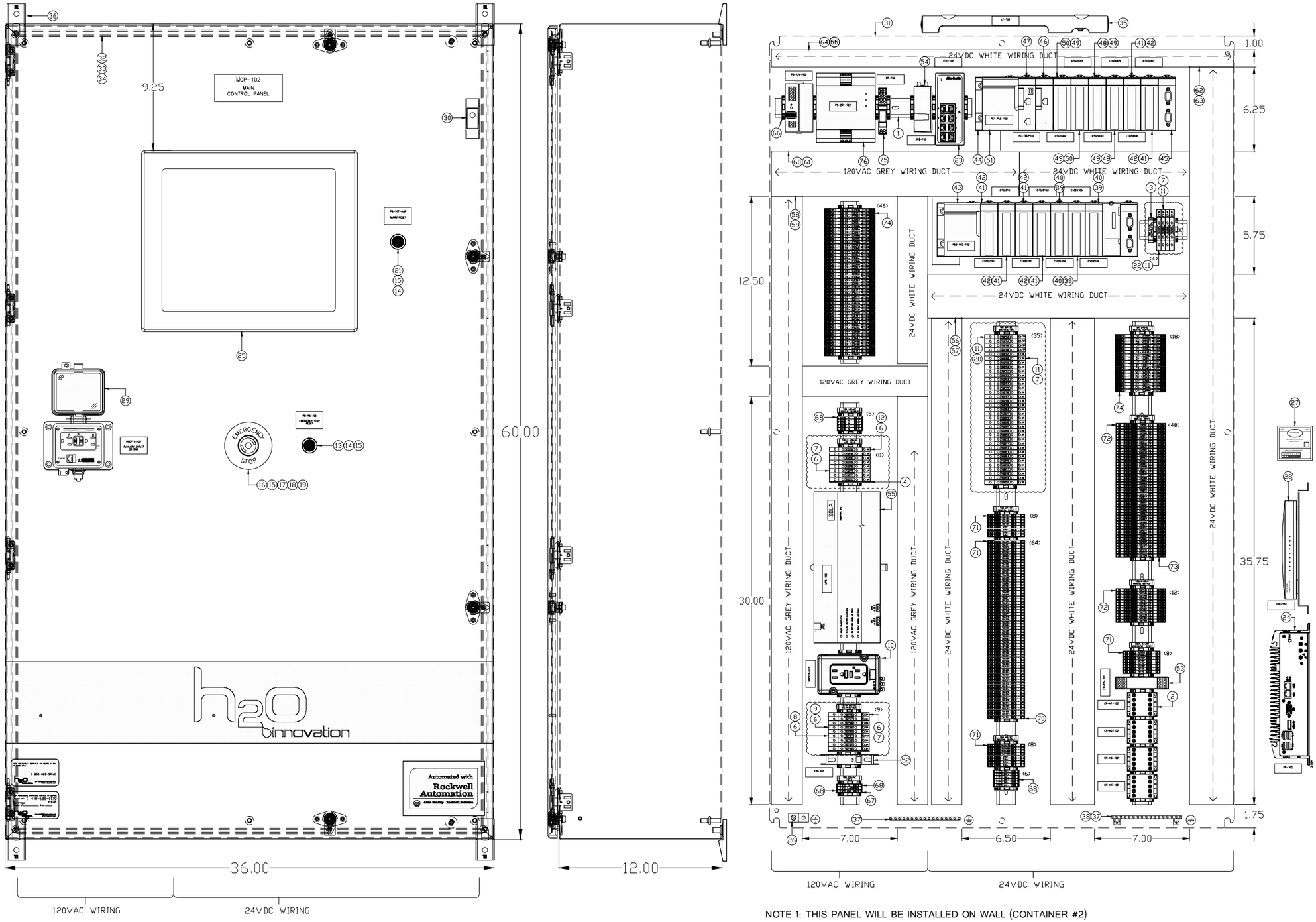

NOTE 1: THIS PANEL WILL BE INSTALLED ON WALL (CONTAINER #2)

NOTE 2: ALL CONNECTIONS WILL BE THROUGH THE BOTTOM

NOTE 3: THIS PANEL APPROX. WEIGHT 250 LBS

NOTE:

THE INFORMATION, SPECIFICATIONS AND DATA SHOWN ON THIS PRINT ARE FURNISHED BY AND ARE TO REMAIN THE PROPERTY OF H_2O INNOVATION.

THE PURPOSE OF THIS DOCUMENT IS TO FACILITATE THE INSTALLATION, MAINTENANCE AND OPERATION OF THE EQUIPMENT REPRESENTED BY SAID PRINT. NO OTHER USE OF THIS DOCUMENT SHALL BE MADE WITHOUT EXPRESS WRITTEN CONSENT FROM H_2O INNOVATION.

NO.	DATE	REVISION	DWN BY	ENGINEER	CHK'D BY
.00	29/07/2016	INITIAL VERSION	E.R.		

h2O innovation
knowledge to share.du savoir à partager

DWG TITLE
MELIADINE STP
CONTAINERIZED SEWAGE
TREATMENT PLANT
ELECTRICAL DRAWINGS

MCP-102
MAIN CONTROL PANEL
PANEL LAYOUT

JOB NO
U65875

DWG NO
U65875-E02-MCP102-PL

SHEET NO
6 OF 25

REVISION
.00

ITEM	QTY	SUB	CATALOG	MFG	DESCRIPTION
1	6		199-DR1	AB	TRACK 35mmX7.5mmX1219mm
2	2		700-K22Z-ZJ	AB	MCS MINI CONTROL RELAY, IEC, 2 NO 2 NC CONTACTS, 24VDC
2	2	*1	700-K22Z-ZJ	AB	MCS MINI CONTROL RELAY, IEC, 2 NO 2 NC CONTACTS, 24VDC
5		*1	100-KFA40E	AB	FRONT-MOUNTED AUXILIARY CONTACTS
3	12		1492-GM35	AB	GROUP MARKING CARRIER
4	4		1492-EBJD3FB	AB	END BARRIER
6	1	*1	1492-JD3FB120	AB	TERMINAL BLOCK/FUSE HOLDER, 120V, LED INDICATION
12		*2	GGM4	FERRAZ	FUSE - CLASS GGM, 4AMPS
6	1	*1	1492-JD3FB120	AB	TERMINAL BLOCK/FUSE HOLDER, 120V, LED INDICATION
8		*2	GGM10	FERRAZ	FUSE - CLASS GGM, 10AMPS
6	2	*1	1492-JD3FB120	AB	TERMINAL BLOCK/FUSE HOLDER, 120V, LED INDICATION
9		*2	GGM5	FERRAZ	FUSE - CLASS GMM, 5AMPS
6	13	*1	1492-JD3FB120	AB	TERMINAL BLOCK/FUSE HOLDER, 120V, LED INDICATION
7		*2	GGM2	FERRAZ	FUSE - CLASS GGM, 2AMPS
10	1		1492-REC15	AB	RAIL MOUNTED RECEPTACLE 125V 15A #18-14AWG
11	1	*1	1492-JD3FB24	AB	TERMINAL BLOCK/FUSE HOLDER, 24V, LED INDICATION
22		*2	GGM3	FERRAZ	FUSE - CLASS GGM, 3AMPS
11	4	*1	1492-JD3FB24	AB	TERMINAL BLOCK/FUSE HOLDER, 24V, LED INDICATION
20		*2	GGM1/2	FERRAZ	FUSE - CLASS GGM, 0.5AMPS
11	34	*1	1492-JD3FB24	AB	TERMINAL BLOCK/FUSE HOLDER, 24V, LED INDICATION
7		*2	GGM2	FERRAZ	FUSE - CLASS GGM, 2AMPS
13	1	*1	800FP-F4	AB	NON-ILLUMINATED PUSH BUTTON, MOMENTARY, RED
14		*1	800F-X10	AB	800F CONTACT BLOCK N.O.
15		*1	800F-ALP	AB	800F PLASTIC MOUNTING LATCH
16	1	*1	800FP-LMT44	AB	E-STOP ILLUMINATED PLASTIC PUSH BUTTON - MUSHROOM (TWIST-TO-RELEASE)
15		*1	800F-ALP	AB	800F PLASTIC MOUNTING LATCH
17		*2	800F-X01S	AB	SECURITY CONTACT BLOCK N.C.
18		*1	800F-N3R	AB	RED INTEGRATED LED MODULE, SCREW TERMINATIONS, 24VAC/DC
19		*1	800F-16Y-E112	AB	EMERGENCY STOP LEGEND PLATE, YELLOW, 30MM (ENGLISH DESCRIPTION)
21	1	*1	800FP-F6	AB	NON-ILLUMINATED PUSH BUTTON, MOMENTARY, BLUE
15		*1	800F-ALP	AB	800F PLASTIC MOUNTING LATCH
14		*1	800F-X10	AB	800F CONTACT BLOCK N.O.
23	1		1783-US8T	AB	STRATIX 2000 UNMANAGED ETHERNET SWITCH, 8 RJ45 PORTS, 10-100 MBPS
24	1		ARK-2150L	ADVANTECH	HIGH PERFORMANCE FANLESS EMBEDDED BOX PC
25	1		ADM-1817AP-004	ARISTA	17-INCH INDUSTRIAL OPERATOR INTERFACE, TOUCHSCREEN, 24VDC
26	1		ADR21	BLACKBURN	ALUMINUM GROUND LUG, 14-2/0AWG
27	1		RS-097	FLOODMASTER	LEAK DETECTION ALARM SYSTEM, 120VAC
28	1		FG-30D	FORTINET	FORTIGATE 30D SERIES, INTEGRATED SECURITY SYSTEM, 120V
29	1		P-R2-K2RF0	GRACEPORT	120V OUTLET GFCI DATA PORT INTERFACE WITH CAT5 ETHERNET PORT TYPE4X
30	1		ALFSWD	HOFFMAN	DOOR ACTIVATED SWITCH
31	1		CP6036	HOFFMAN	BACK PLATE 60X36
32	1	*1	CSD603612SSR	HOFFMAN	CONCEPT WALL-MOUNT ENCLOSURE 60X36X12 STAINLESS STEEL
33		*1	ADP2	HOFFMAN	THERMOPLASTIC DATA POCKET 12X12
34		*1	AGS808	HOFFMAN	GROUND STRAP
35	1		LEDD1S35	HOFFMAN	LED LIGHT BAR 14 INCHES, 24VDC, 5 WATTS, 900 LUMENS

ITEM	QTY	SUB	CATALOG	MFG	DESCRIPTION
36	1		CMFKSS	HOFFMAN	STAINLESS STEEL MOUNTING BRACKET KIT
37	1	*1	N-174-AS	ILSCO	GROUND BAR COPPER
38		*1	PKGTAB	SQUARED	GROUND BAR INSULATOR
37	1		N-174-AS	ILSCO	GROUND BAR COPPER
39	3	*1	BMXAMO0410	MODICON	M340 4 CHANNEL ANALOG OUTPUT MODULE
40		*1	BMXFTW301S	MODICON	FTB 20-WIRE 3METER SHIELDED CABLE
41	6	*1	BMXAMI0810	MODICON	M340 8 CHANNEL ISOLATED ANALOG INPUT MODULE
42		*1	BMXFTW308S	MODICON	FTB 28-WIRE 3METER SHIELDED CABLE
43	1		BMXCPS3500	MODICON	PLC MODICON M340 POWER SUPPLY MODULE, 100-240 VAC
44	2		BMXXBP0800	MODICON	M340 PLC RACK, 8 SLOTS
45	1		BMXXBE2005	MODICON	M340 BACKPLANE EXTENSION RACK KIT
46	1		BMXNOE0100	MODICON	M340 ETHERNET MODULE, FLASH MEMORY CARD
47	1		BMXP342020	MODICON	M340 PROCESSOR MODULE
48	2	*1	BMXDDO3202K	MODICON	M340 DISCRETE OUTPUT MODULE, 32 OUTPUTS, 24VDC
49		*1	BMXFCW303	MODICON	FCN 2 X 20-WIRE 3METER CABLE
50	2	*1	BMXDDI3202K	MODICON	M340 DISCRETE INPUT MODULE, 32 INPUTS, 24VDC
49		*1	BMXFCW303	MODICON	FCN 2 X 20-WIRE 3METER CABLE
51	1		BMXCPS2000	MODICON	PLC MODICON M340 POWER SUPPLY MODULE, 100-240 VAC
52	1		60112	SCHNEIDER	1 POLE THERMAL MAGNETIC CIRCUIT BREAKER, 15A
53	1		XPSAF5130P	SCHNEIDER	SAFETY MONITORING RELAY, DUAL CHANNEL, 24VAC/DC
54	1		RV50	SIERRA	AIRLINK RAVEN RV50 INDUSTRIAL LTE GATEWAY, 12VDC
55	1		SDU850	SOLA	UNINTERRUPTIBLE INDUSTRIAL UPS-850VA
56	1	*18	TY2X3NPW6	THOMAS & BETTS	WIRING DUCT 2X3" WHITE
57		*18	TY2CPW6	THOMAS & BETTS	WIRING DUCT COVER 2" WHITE
58	1	*18	TY2X3NPG6	THOMAS & BETTS	WIRING DUCT 2X3" GRAY
59		*18	TY2CPG6	THOMAS & BETTS	WIRING DUCT COVER 2" GRAY
60	1	*18	TY3X3NPG6	THOMAS & BETTS	WIRING DUCT 3X3" GRAY
61		*18	TY3CPG6	THOMAS & BETTS	WIRING DUCT COVER 3" GRAY
62	1	*18	TY3X3NPW6	THOMAS & BETTS	WIRING DUCT 3X3" WHITE
63		*18	TY3CPW6	THOMAS & BETTS	WIRING DUCT COVER 3" WHITE
64	1	*6	TY1X3NPW6	THOMAS & BETTS	WIRING DUCT 1X3" WHITE
65		*6	TY1CPW6	THOMAS & BETTS	WIRING DUCT COVER 1" WHITE
66	43		249-116	WAGO	SCREWLESS END RETAINER
67	3		2002-1292	WAGO	FEED-TROUGH END BARRIER FOR 2002-1201 TERMINAL BLOCK
68	13		2002-1201	WAGO	SINGLE DECK SPRING CLAMP TERMINAL BLOCK, GRAY
69	1		2002-1207	WAGO	SPRING CLAMP GROUND TERMINAL BLOCK, GREEN/YELLOW
70	4		2002-2292	WAGO	FEED-TROUGH END BARRIER FOR 2002-2201 TERMINAL BLOCK
71	88		2002-2201	WAGO	DOUBLE DECK SPRING CLAMP TERMINAL BLOCK, GRAY
72	60		2002-3201	WAGO	TRIPLE DECK SPRING CLAMP TERMINAL BLOCK, GRAY
73	2		2002-3292	WAGO	FEED-TROUGH END BARRIER FOR 2002-3201 TERMINAL BLOCK
74	64		857-304	WAGO	TERMINAL BLOCK RELAY, SPRING CLAMP, SPDT, 24VDC
75	1		788-507	WAGO	PLUG-IN TYPE RELAY, SPDT, 120VAC
76	1		787-732	WAGO	POWER SUPPLY 85-264VAC/24VDC, 10A
77	1		787-1621	WAGO	POWER SUPPLY 100-240VAC/12VDC, 7A

NOTE:

THE INFORMATION, SPECIFICATIONS AND DATA SHOWN ON THIS PRINT ARE FURNISHED BY AND ARE TO REMAIN THE PROPERTY OF H_2O INNOVATION.

THE PURPOSE OF THIS DOCUMENT IS TO FACILITATE THE INSTALLATION, MAINTENANCE AND OPERATION OF THE EQUIPMENT REPRESENTED BY SAID PRINT. NO OTHER USE OF THIS DOCUMENT SHALL BE MADE WITHOUT EXPRESS WRITTEN CONSENT FROM H_2O INNOVATION.

NO.	DATE	INITIAL VERSION / REVISION	DWN BY	E.R.	ENGINEER	CHK'D BY
.00	29/07/2016	INITIAL VERSION				

h2o innovation
knowledge to share du savoir à partager

DWG TITLE
MELIADINE STP
CONTAINERIZED SEWAGE TREATMENT PLANT
ELECTRICAL DRAWINGS

MCP-102
MAIN CONTROL PANEL
BILL OF MATERIAL

JOB NO: U65875

DWG NO: U65875-E02-MCP102-BOM

SHEET NO: 7 OF 25

REVISION: .00

ENCLOSURE DOOR IDENTIFICATION

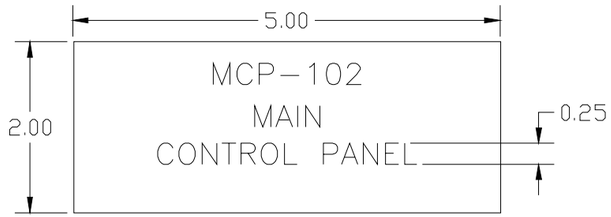

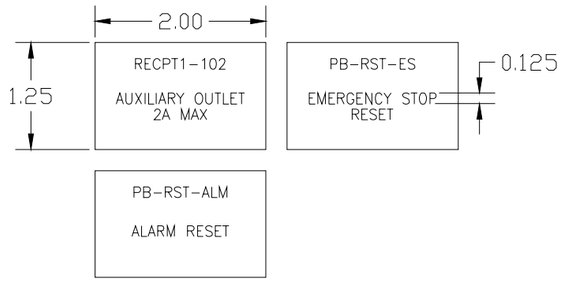

NOTE 1: ADHESIVE BACKED LAMINATED PLASTIC

NOTE 2: BLACK LETTERING ON WHITE BACKGROUND

NOTE 3: THICKNESS 1/16"

INSIDE PANEL IDENTIFICATION

CB–102	CR–K4–102	CR–K3–102	CR–K1–102
CR–K2–102	PC–102	UPS–102	FOR–102
RECPT2–102	PS–12V–102	PS–24V–102	CR–102
GTW–102	PS1–PLC–102	PLC–MCP102	C1020002
C1020004	C1020006	C1020101	C1020103
C1020105	C1020003	C1020005	C1020007
PS2–PLC–102	C1020100	C1020102	C1020104
C1020106	CR–ES–102	LT–102	

TB8 12VDC DISTRIBUTION	TB4 120VAC DIGITAL OUTPUT	TB1–B 120VAC UPS FEED	TB5 4–20mA ANALOG INPUT
TB4 24VDC DIGITAL OUTPUT	TB6 4–20mA ANALOG OUTPUT	TBES 24VDC EMERGENCY STOP	TB1–A 120VAC DISTRIBUTION
TB0 120VAC FEED	TB3 24VDC DIGITAL INPUT	TB2 24VDC DISTRIBUTION	

NOTE:

THE INFORMATION, SPECIFICATIONS AND DATA SHOWN ON THIS PRINT ARE FURNISHED BY AND ARE TO REMAIN THE PROPERTY OF H_2O INNOVATION.

THE PURPOSE OF THIS DOCUMENT IS TO FACILITATE THE INSTALLATION, MAINTENANCE AND OPERATION OF THE EQUIPMENT REPRESENTED BY SAID PRINT. NO OTHER USE OF THIS DOCUMENT SHALL BE MADE WITHOUT EXPRESS WRITTEN CONSENT FROM H_2O INNOVATION.

NO.	DATE (dd/mm/yyyy)		DWN BY	ENGINEER	CHK'D BY
.00	29/07/2016	INITIAL VERSION	E.R.		
		REVISION			

h2o innovation
knowledge to share du savoir à partager

DWG TITLE

MELIADINE STP
CONTAINERIZED SEWAGE
TREATMENT PLANT
ELECTRICAL DRAWINGS

MCP-102
MAIN CONTROL PANEL
LAMICOID TAG

JOB NO: U65875

DWG NO: U65875-E02-MCP102-TAG

SHEET NO: 8 OF 25

REVISION: .00

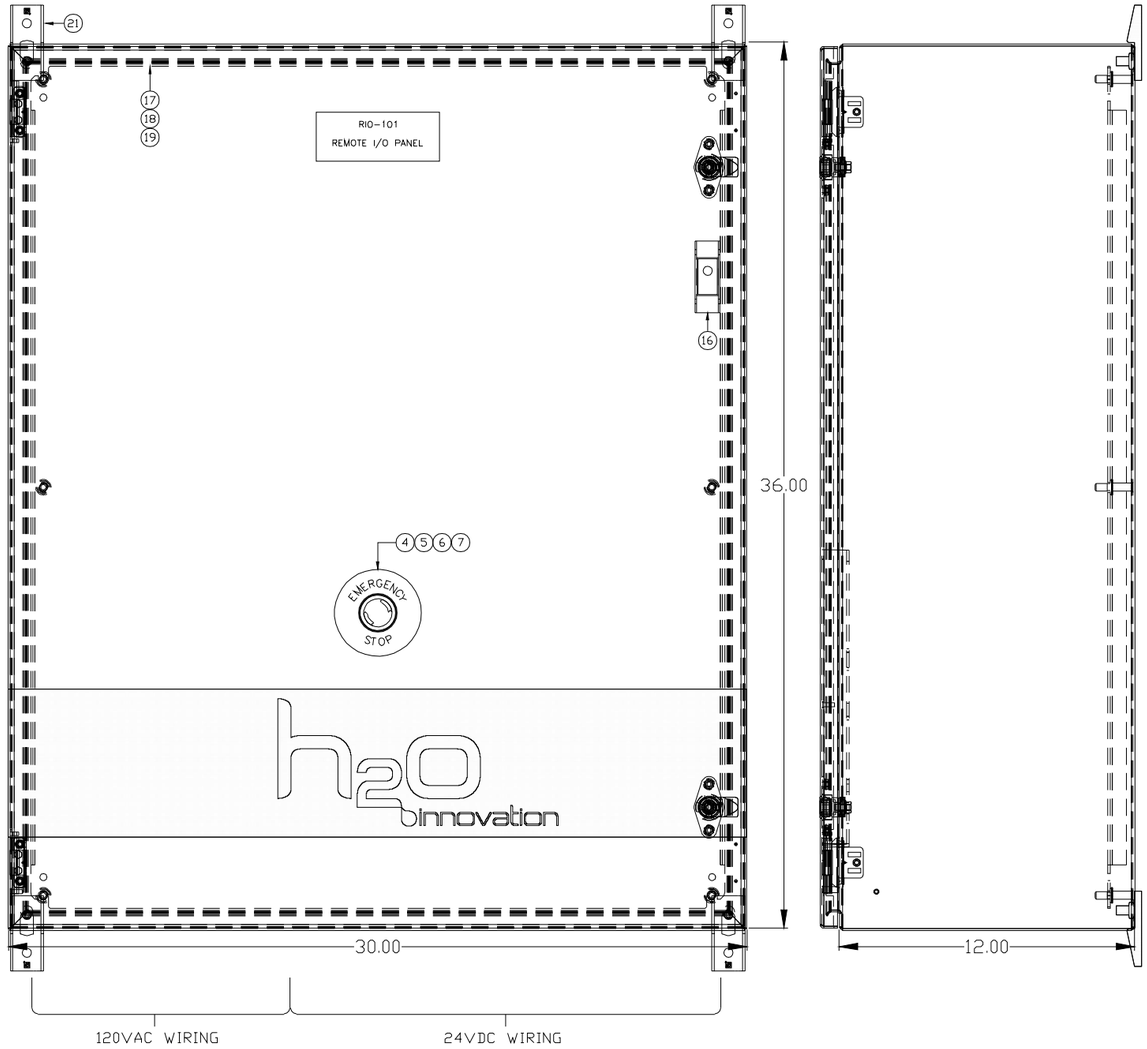

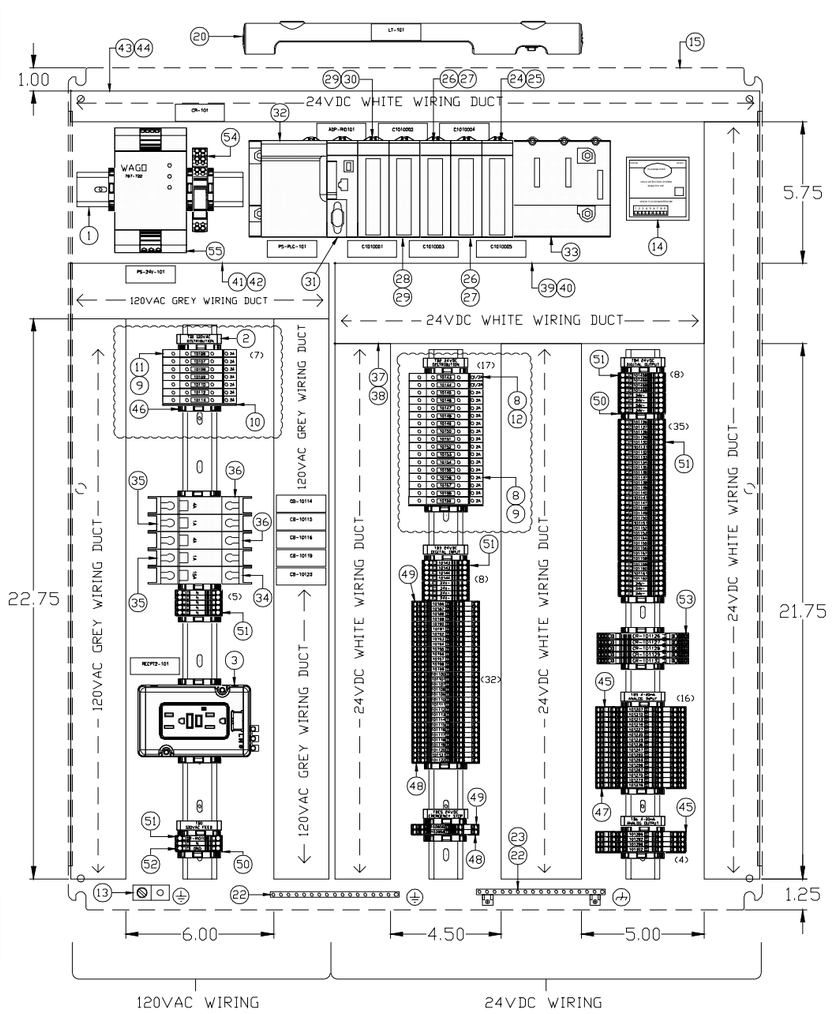

NOTE 1: THIS PANEL WILL BE INSTALLED ON WALL (CONTAINER #1)

NOTE 2: ALL CONNECTIONS WILL BE THROUGH THE BOTTOM

NOTE 3: THIS PANEL APPROX. WEIGHT 150 LBS

NOTE:

THE INFORMATION, SPECIFICATIONS AND DATA SHOWN ON THIS PRINT ARE FURNISHED BY AND ARE TO REMAIN THE PROPERTY OF H_2O INNOVATION.

THE PURPOSE OF THIS DOCUMENT IS TO FACILITATE THE INSTALLATION, MAINTENANCE AND OPERATION OF THE EQUIPMENT REPRESENTED BY SAID PRINT. NO OTHER USE OF THIS DOCUMENT SHALL BE MADE WITHOUT EXPRESS WRITTEN CONSENT FROM H_2O INNOVATION.

NO.	DATE	REVISION	DWN BY	ENGINEER	CHK'D BY
.00	29/07/2016	INITIAL VERSION	E.R.		

h2o innovation
knowledge to share // savoir à partager

DWG TITLE
MELIADINE STP
CONTAINERIZED SEWAGE TREATMENT PLANT
ELECTRICAL DRAWINGS

RIO-101
REMOTE I/O PANEL
PANEL LAYOUT

JOB NO: U65875

DWG NO: U65875-E02-RIO101-PL

SHEET NO: 9 OF 25

REVISION: .00

ITEM	QTY	SUB	CATALOG	MFG	DESCRIPTION
1	4		199-DR1	AB	TRACK 35mmX7.5mmX1219mm
2	8		1492-GM35	AB	GROUP MARKING CARRIER
3	1		1492-REC15	AB	RAIL MOUNTED RECEPTACLE 125V 15A #18-14AWG
4	1	*1	800FP-MT44	AB	E-STOP NON-ILLUMINATED PUSH BUTTON - MUSHROOM (TWIST-TO-RELEASE)
5		*1	800F-ALP	AB	800F PLASTIC MOUNTING LATCH
6		*2	800F-X01S	AB	SECURITY CONTACT BLOCK N.C.
7		*1	800F-16Y-E112	AB	EMERGENCY STOP LEGEND PLATE, YELLOW, 30MM (ENGLISH DESCRIPTION)
8	2	*1	1492-JD3FB24	AB	TERMINAL BLOCK/FUSE HOLDER, 24V, LED INDICATION
12		*2	GGM1/2	FERRAZ	FUSE - CLASS GGM, 0.5AMPS
8	15	*1	1492-JD3FB24	AB	TERMINAL BLOCK/FUSE HOLDER, 24V, LED INDICATION
9		*2	GGM2	FERRAZ	FUSE - CLASS GGM, 2AMPS
10	2		1492-EBJD3FB	AB	END BARRIER
11	7	*1	1492-JD3FB120	AB	TERMINAL BLOCK/FUSE HOLDER, 120V, LED INDICATION
9		*2	GGM2	FERRAZ	FUSE - CLASS GGM, 2AMPS
13	1		ADR21	BLACKBURN	ALUMINUM GROUND LUG, 14-2/0AWG
14	1		RS-097	FLOODMASTER	LEAK DETECTION ALARM SYSTEM, 120VAC
15	1		CP3630	HOFFMAN	BACK PLATE 36X30
16	1		ALFSWD	HOFFMAN	DOOR ACTIVATED SWITCH
17	1	*1	CSD363012SS	HOFFMAN	CONCEPT WALL-MOUNT ENCLOSURE 36X30X12 STAINLESS STEEL
18		*1	AGS808	HOFFMAN	GROUND STRAP
19		*1	ADP2	HOFFMAN	THERMOPLASTIC DATA POCKET 12X12
20	1		LEDDIS35	HOFFMAN	LED LIGHT BAR 14 INCHES, 24VDC, 5 WATTS, 900 LUMENS
21	1		CMFKSS	HOFFMAN	STAINLESS STEEL MOUNTING BRACKET KIT
22	1	*1	N-174-AS	ILSCO	GROUND BAR COOPER
23		*1	PKGTAB	SQUARED	GROUND BAR INSULATOR
22	1		N-174-AS	ILSCO	GROUND BAR COOPER
24	1	*1	BMXAMO0410	MODICON	M340 4 CHANNEL ANALOG OUTPUT MODULE
25		*1	BMXFTW301S	MODICON	FTB 20-WIRE 3METER SHIELDED CABLE
26	2	*1	BMXAMI0810	MODICON	M340 8 CHANNEL ISOLATED ANALOG INPUT MODULE
27		*1	BMXFTW308S	MODICON	FTB 28-WIRE 3METER SHIELDED CABLE
28	1	*1	BMXDDO3202K	MODICON	M340 DISCRETE OUTPUT MODULE, 32 OUTPUTS, 24VDC
29		*1	BMXFCW303	MODICON	FCN 2 X 20-WIRE 3METER CABLE
30	1	*1	BMXDDI3202K	MODICON	M340 DISCRETE INPUT MODULE, 32 INPUTS, 24VDC
29		*1	BMXFCW303	MODICON	FCN 2 X 20-WIRE 3METER CABLE
31	1		BMXPRA0100	MODICON	PERIPHERAL REMOTE IO ADAPTER, CONTROLLER, ETHERNET
32	1		BMXCPS2000	MODICON	PLC MODICON M340 POWER SUPPLY MODULE, 100-240 VAC
33	1		BMXXBP0800	MODICON	M340 PLC RACK, 8 SLOTS
34	1		60112	SCHNEIDER	1 POLE THERMAL MAGNETIC CIRCUIT BREAKER, 15A
35	2		60101	SCHNEIDER	1 POLE THERMAL MAGNETIC CIRCUIT BREAKER, 1A
36	2		60105	SCHNEIDER	1 POLE THERMAL MAGNETIC CIRCUIT BREAKER, 4A
37	1	*12	TY2X3NPW6	THOMAS & BETTS	WIRING DUCT 2X3" WHITE
38		*12	TY2CPW6	THOMAS & BETTS	WIRING DUCT COVER 2" WHITE
39	1	*12	TY3X3NPW6	THOMAS & BETTS	WIRING DUCT 3X3" WHITE
40		*12	TY3CPW6	THOMAS & BETTS	WIRING DUCT COVER 3" WHITE
41	1	*12	TY2X3NPG6	THOMAS & BETTS	WIRING DUCT 2X3" GRAY
42		*12	TY2CPG6	THOMAS & BETTS	WIRING DUCT COVER 2" GRAY
43	1	*6	TY1X3NPW6	THOMAS & BETTS	WIRING DUCT 1X3" WHITE
44		*6	TY1CPG6	THOMAS & BETTS	WIRING DUCT COVER 1" GRAY
45	20		2002-3201	WAGO	TRIPLE DECK SPRING CLAMP TERMINAL BLOCK, GRAY
46	27		249-116	WAGO	SCREWLESS END RETAINER
47	2		2002-3292	WAGO	FEED-TROUGH END BARRIER FOR 2002-3201 TERMINAL BLOCK
48	2		2002-2292	WAGO	FEED-TROUGH END BARRIER FOR 2002-2201 TERMINAL BLOCK
49	34		2002-2201	WAGO	DOUBLE DECK SPRING CLAMP TERMINAL BLOCK, GRAY
50	5		2002-1292	WAGO	FEED-TROUGH END BARRIER FOR 2002-1201 TERMINAL BLOCK
51	58		2002-1201	WAGO	SINGLE DECK SPRING CLAMP TERMINAL BLOCK, GRAY
52	1		2002-1207	WAGO	SPRING CLAMP GROUND TERMINAL BLOCK, GREEN/YELLOW
53	5		857-304	WAGO	TERMINAL BLOCK RELAY, SPRING CLAMP, SPDT, 24VDC
54	1		788-507	WAGO	PLUG-IN TYPE RELAY, SPDT, 120VAC
55	1		787-722	WAGO	POWER SUPPLY 85-264VAC/24VDC, 5A

NOTE:

THE INFORMATION, SPECIFICATIONS AND DATA SHOWN ON THIS PRINT ARE FURNISHED BY AND ARE TO REMAIN THE PROPERTY OF H_2O INNOVATION.

THE PURPOSE OF THIS DOCUMENT IS TO FACILITATE THE INSTALLATION, MAINTENANCE AND OPERATION OF THE EQUIPMENT REPRESENTED BY SAID PRINT. NO OTHER USE OF THIS DOCUMENT SHALL BE MADE WITHOUT EXPRESS WRITTEN CONSENT FROM H_2O INNOVATION.

NO.	DATE	REVISION	DWN BY	ENGINEER	CHK'D BY
.00	29/07/2016	INITIAL VERSION	E.R.		

h2o innovation
knowledge to share du savoir à partager

DWG TITLE

MELIADINE STP
CONTAINERIZED SEWAGE
TREATMENT PLANT
ELECTRICAL DRAWINGS

RIO-101
REMOTE I/O PANEL
BILL OF MATERIAL

JOB NO
U65875

DWG NO
U65875-E02-RIO101-BOM

SHEET NO
10 OF 25

REVISION
.00

ENCLOSURE DOOR IDENTIFICATION

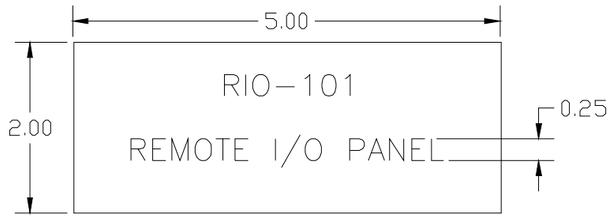

NOTE 1: ADHESIVE BACKED LAMINATED PLASTIC

NOTE 2: BLACK LETTERING ON WHITE BACKGROUND

NOTE 3: THICKNESS 1/16"

INSIDE PANEL IDENTIFICATION

PS-24V-101	CR-101	C1010003
RECPT2-101	LT-101	C1010005
CB-10114	ADP-RIO101	TB0 120VAC FEED
		TB5 4-20mA ANALOG INPUT
CB-10115	C1010002	TB6 4-20mA ANALOG OUTPUT
		TB3 24VDC DIGITAL INPUT
CB-10116	C1010004	TB1 120VAC DISTRIBUTION
		TB2 24VDC DISTRIBUTION
CB-10119	PS-PLC-101	TB4 24VDC DIGITAL OUTPUT
		TBES 24VDC EMERGENCY STOP
CB-10123	C1010001	

NOTE:

THE INFORMATION, SPECIFICATIONS AND DATA SHOWN ON THIS PRINT ARE FURNISHED BY AND ARE TO REMAIN THE PROPERTY OF H_2O INNOVATION.

THE PURPOSE OF THIS DOCUMENT IS TO FACILITATE THE INSTALLATION, MAINTENANCE AND OPERATION OF THE EQUIPMENT REPRESENTED BY SAID PRINT. NO OTHER USE OF THIS DOCUMENT SHALL BE MADE WITHOUT EXPRESS WRITTEN CONSENT FROM H_2O INNOVATION.

NO.	DATE (dd/mm/yyyy)		DWN BY	ENGINEER	CHK'D BY
.00	29/07/2016	INITIAL VERSION	E.R.		

h2o innovation
knowledge to share du savoir à partager

DWG TITLE

MELIADINE STP
CONTAINERIZED SEWAGE TREATMENT PLANT
ELECTRICAL DRAWINGS

RIO-101
REMOTE I/O PANEL
LAMICOID TAG

JOB NO	
U65875	
DWG NO	
U65875-E02-RIO101-TAG	
SHEET NO	REVISION
11 OF 25	.00

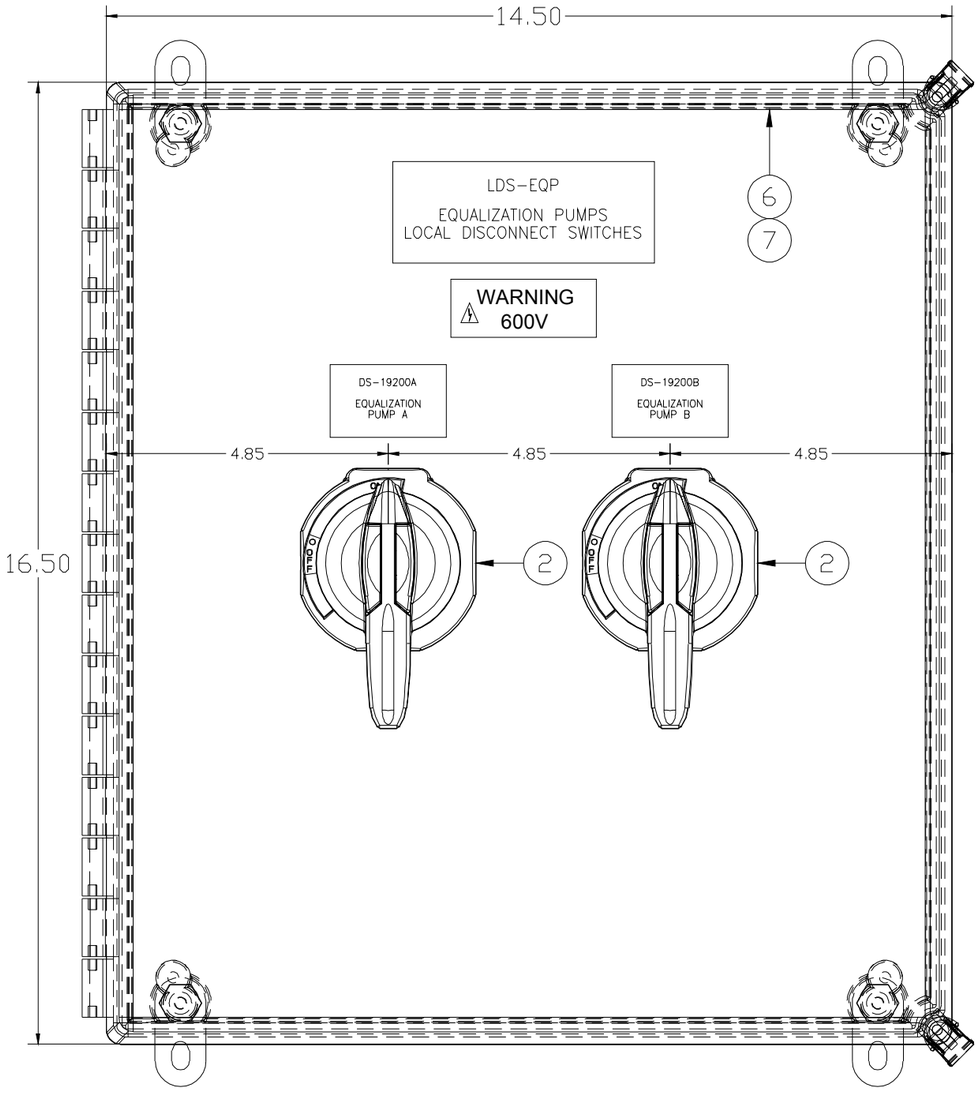

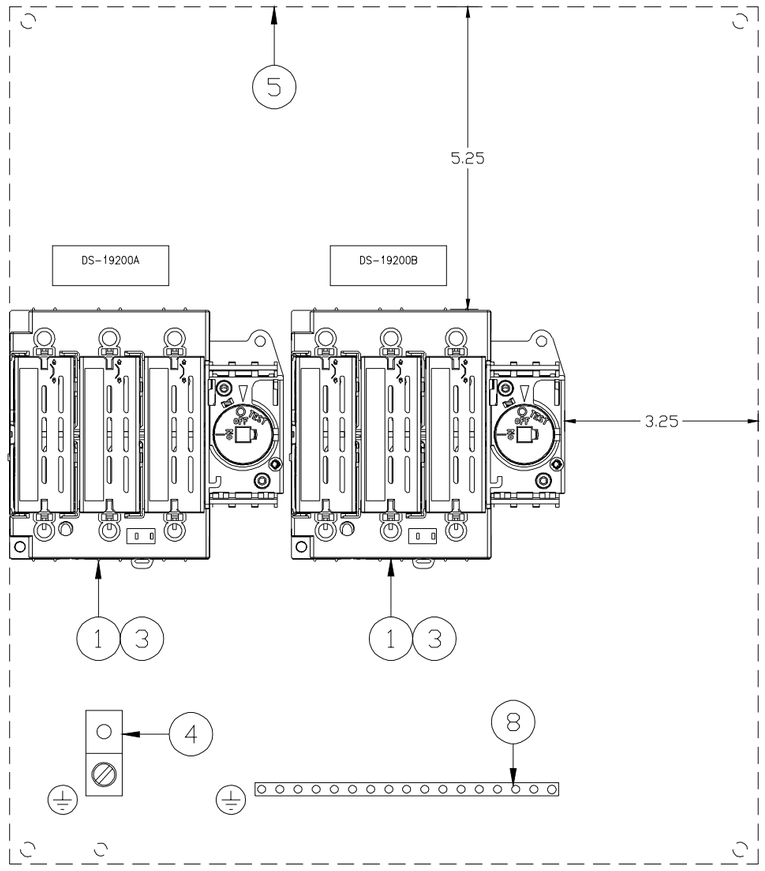

ITEM	QTY	SUB	CATALOG	MFG	DESCRIPTION
1	2	*1	194R-N30-1753	AB	NEXT GENERATION DISCONNECT SWITCH, NON-FUSED, 30A, OPEN STYLE
2		*1	194R-PY	AB	PADLOCKABLE HANDLE NEMA 4X RED/YELLOW
3		*1	194R-S1	AB	OPERATING SHAFT 12 INCHES
4	1		ADR21	BLACKBURN	ALUMINUM GROUND LUG, 14-2/0AWG
5	1		A16P14	HOFFMAN	BACK PLATE 16X14
6	1	*1	A16148CHQRFG	HOFFMAN	FIBERGLASS CONTINUOUS HINGE TYPE 4X 16X14X8
7		*1	AGS808	HOFFMAN	GROUND STRAP
8	1		N-174-AS	ILSCO	GROUND BAR COPPER

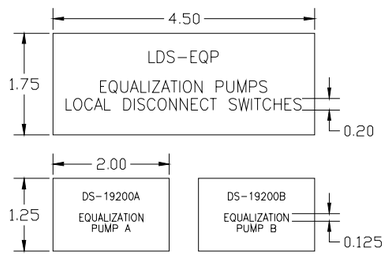

NOTE 1: THIS JUNCTION BOX WILL BE INSTALLED ON THE EQ TANK (OUTSIDE CONTAINERS)

NOTE 2: THIS JUNCTION BOX APPROX. WEIGHT 20 LBS

- ADHESIVE BACKED LAMINATED PLASTIC
- BLACK LETTERING ON WHITE BACKGROUND
- THICKNESS 1/16"

NOTE:

THE INFORMATION, SPECIFICATIONS AND DATA SHOWN ON THIS PRINT ARE FURNISHED BY AND ARE TO REMAIN THE PROPERTY OF H_2O INNOVATION.

THE PURPOSE OF THIS DOCUMENT IS TO FACILITATE THE INSTALLATION, MAINTENANCE AND OPERATION OF THE EQUIPMENT REPRESENTED BY SAID PRINT. NO OTHER USE OF THIS DOCUMENT SHALL BE MADE WITHOUT EXPRESS WRITTEN CONSENT FROM H_2O INNOVATION.

NO.	DATE	REVISION	DWN BY	ENGINEER	CHK'D BY
.00	29/07/2016	INITIAL VERSION	E.R.		

h2o innovation
knowledge to share du savoir à partager

DWG TITLE
MELIADINE STP
CONTAINERIZED SEWAGE
TREATMENT PLANT
ELECTRICAL DRAWINGS

LDS-EQP
LOCAL DISCONNECT SWITCH
PANEL LAYOUT

JOB NO
U65875

DWG NO
U65875-E02-LDSEQP-PL

SHEET NO	REVISION
12 OF 25	.00

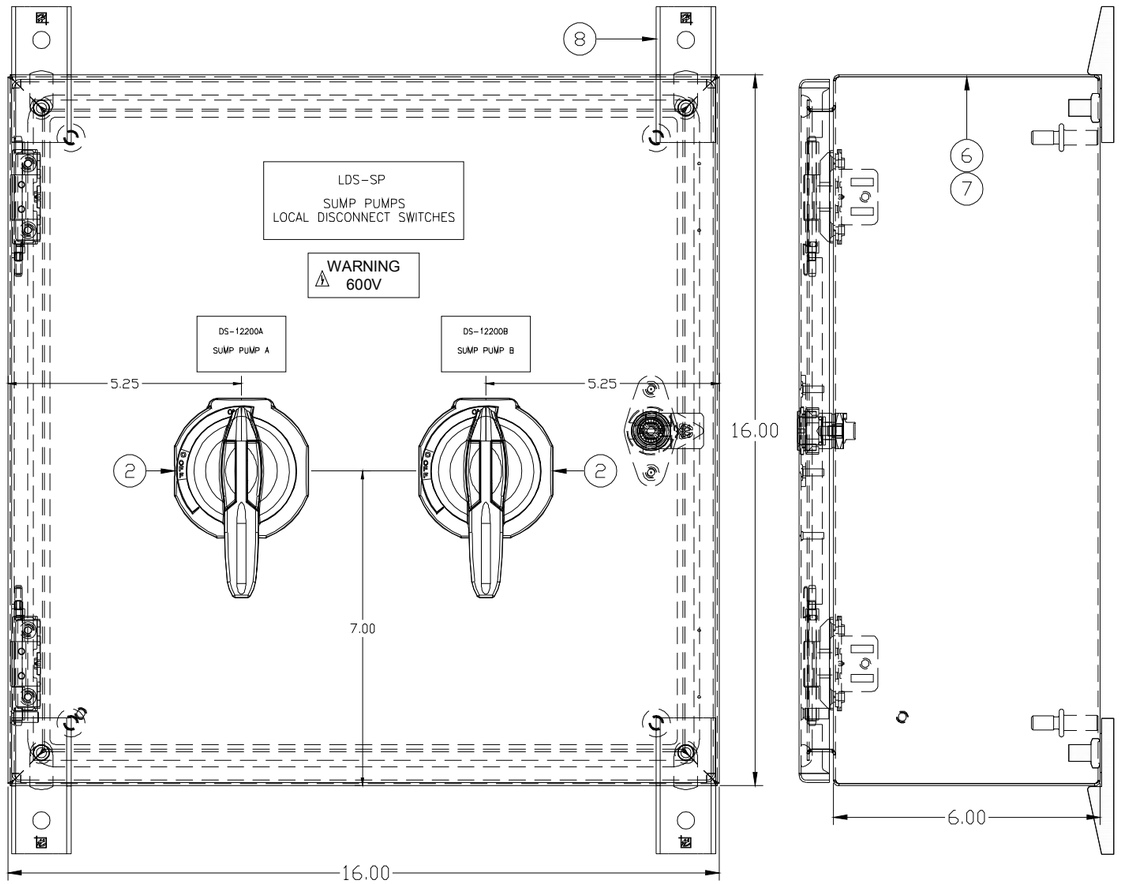

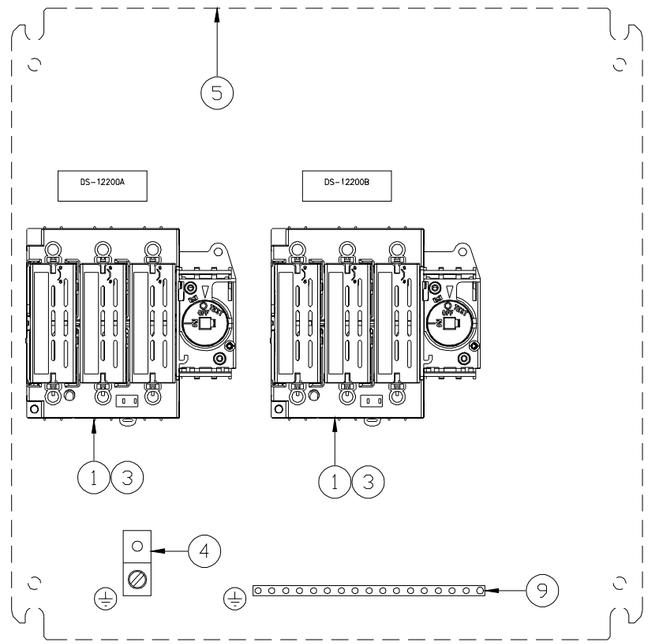

ITEM	QTY	SUB	CATALOG	MFG	DESCRIPTION
1	2	*1	194R-N30-1753	AB	NEXT GENERATION DISCONNECT SWITCH, NON-FUSED, 30A, OPEN STYLE
2		*1	194R-PY	AB	PADLOCKABLE HANDLE NEMA 4X RED/YELLOW
3		*1	194R-S1	AB	OPERATING SHAFT 12 INCHES
4	1		ADR21	BLACKBURN	ALUMINUM GROUND LUG, 14-2/0AWG
5	1		CP1616	HOFFMAN	BACK PLATE 16X16
6	1	*1	CSD16166SS	HOFFMAN	CONCEPT WALL-MOUNT ENCLOSURE 16X16X6 STAINLESS STEEL
7		*1	AGS808	HOFFMAN	GROUND STRAP
8	1		CMFKSS	HOFFMAN	STAINLESS STEEL MOUNTING BRACKET KIT
9	1		N-174-AS	ILSCO	GROUND BAR COOPER

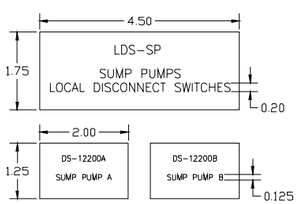

NOTE 1: THIS JUNCTION BOX WILL BE INSTALLED ON THE RAW WATER SKID (CONTAINER #1)

NOTE 2: THIS JUNCTION BOX APPROX. WEIGHT 30 LBS

- ADHESIVE BACKED LAMINATED PLASTIC
- BLACK LETTERING ON WHITE BACKGROUND
- THICKNESS 1/16"

NOTE:

THE INFORMATION, SPECIFICATIONS AND DATA SHOWN ON THIS PRINT ARE FURNISHED BY AND ARE TO REMAIN THE PROPERTY OF H_2O INNOVATION.

THE PURPOSE OF THIS DOCUMENT IS TO FACILITATE THE INSTALLATION, MAINTENANCE AND OPERATION OF THE EQUIPMENT REPRESENTED BY SAID PRINT. NO OTHER USE OF THIS DOCUMENT SHALL BE MADE WITHOUT EXPRESS WRITTEN CONSENT FROM H_2O INNOVATION.

NO.	DATE	REVISION	DWN BY	ENGINEER	CHK'D BY
.00	29/07/2016	INITIAL VERSION	E.R.		

h2o innovation
knowledge to share du savoir à partager

DWG TITLE
MELIADINE STP
CONTAINERIZED SEWAGE TREATMENT PLANT
ELECTRICAL DRAWINGS

LDS-SP
LOCAL DISCONNECT SWITCH
PANEL LAYOUT

JOB NO: U65875

DWG NO: U65875-E02-LDSSP-PL

SHEET NO: 13 OF 25

REVISION: .00

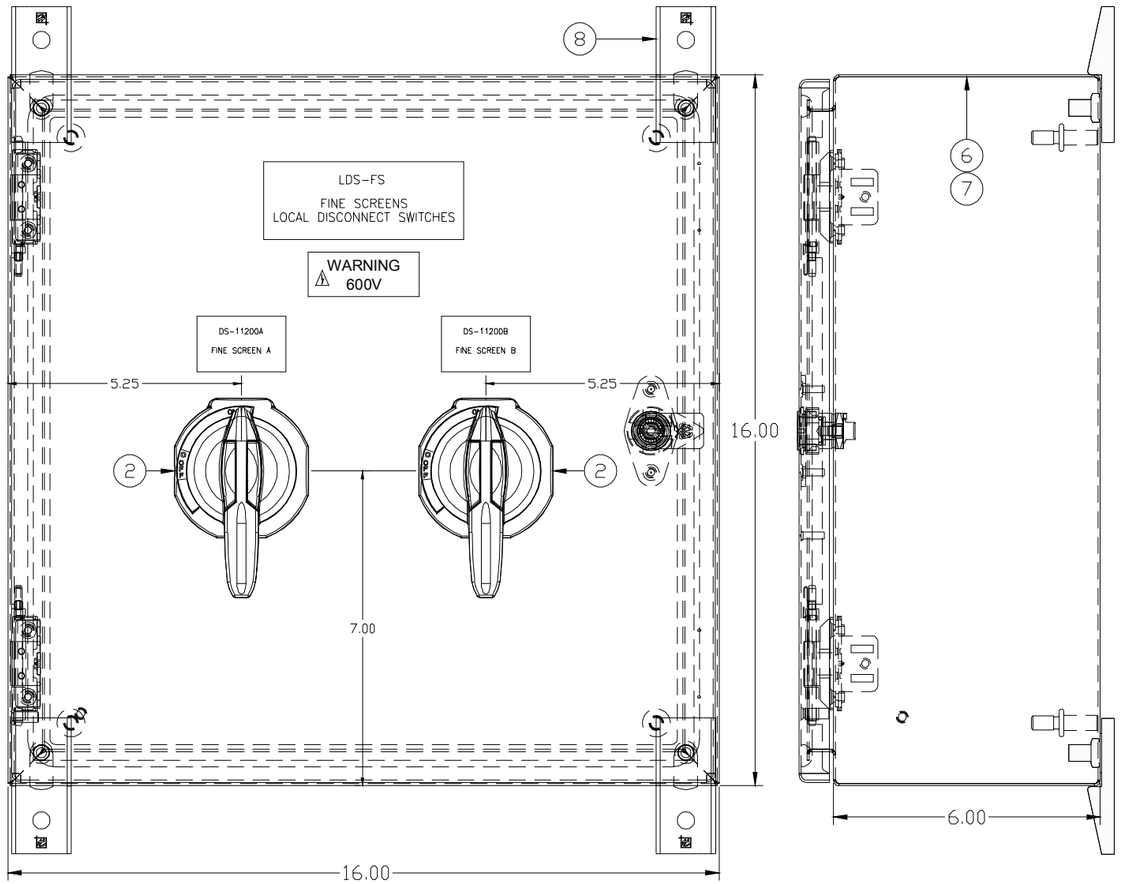

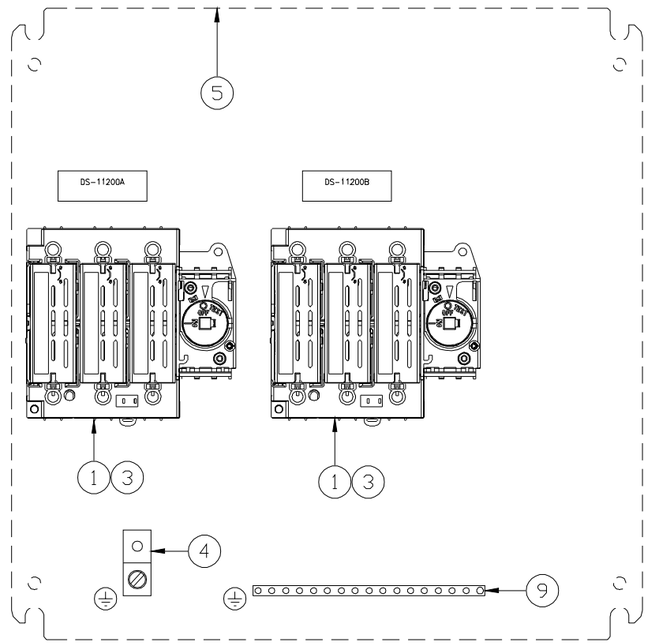

ITEM	QTY	SUB	CATALOG	MFG	DESCRIPTION
1	2	*1	194R-N30-1753	AB	NEXT GENERATION DISCONNECT SWITCH, NON-FUSED, 30A, OPEN STYLE
2		*1	194R-PY	AB	PADLOCKABLE HANDLE NEMA 4X RED/YELLOW
3		*1	194R-S1	AB	OPERATING SHAFT 12 INCHES
4	1		ADR21	BLACKBURN	ALUMINUM GROUND LUG, 14-2/0AWG
5	1		CP1616	HOFFMAN	BACK PLATE 16X16
6	1	*1	CSD16166SS	HOFFMAN	CONCEPT WALL-MOUNT ENCLOSURE 16X16X6 STAINLESS STEEL
7		*1	AGS808	HOFFMAN	GROUND STRAP
8	1		CMFKSS	HOFFMAN	STAINLESS STEEL MOUNTING BRACKET KIT
9	1		N-174-AS	ILSCO	GROUND BAR COOPER

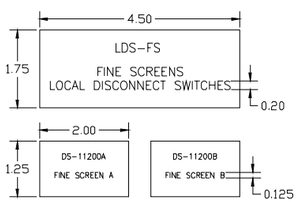

NOTE 1: THIS JUNCTION BOX WILL BE INSTALLED ON THE RAW WATER SKID (CONTAINER #1)

NOTE 2: THIS JUNCTION BOX APPROX. WEIGHT 30 LBS

- ADHESIVE BACKED LAMINATED PLASTIC
- BLACK LETTERING ON WHITE BACKGROUND
- THICKNESS 1/16"

NOTE:

THE INFORMATION, SPECIFICATIONS AND DATA SHOWN ON THIS PRINT ARE FURNISHED BY AND ARE TO REMAIN THE PROPERTY OF H_2O INNOVATION.

THE PURPOSE OF THIS DOCUMENT IS TO FACILITATE THE INSTALLATION, MAINTENANCE AND OPERATION OF THE EQUIPMENT REPRESENTED BY SAID PRINT. NO OTHER USE OF THIS DOCUMENT SHALL BE MADE WITHOUT EXPRESS WRITTEN CONSENT FROM H_2O INNOVATION.

NO.	DATE	REVISION	DWN BY	ENGINEER	CHK'D BY
.00	29/07/2016	INITIAL VERSION	E.R.		

h2o innovation
knowledge to share du savoir à partager

DWG TITLE
MELIADINE STP
CONTAINERIZED SEWAGE TREATMENT PLANT
ELECTRICAL DRAWINGS

LDS-FS
LOCAL DISCONNECT SWITCH
PANEL LAYOUT

JOB NO: U65875

DWG NO: U65875-E02-LDSFS-PL

SHEET NO: 14 OF 25

REVISION: .00

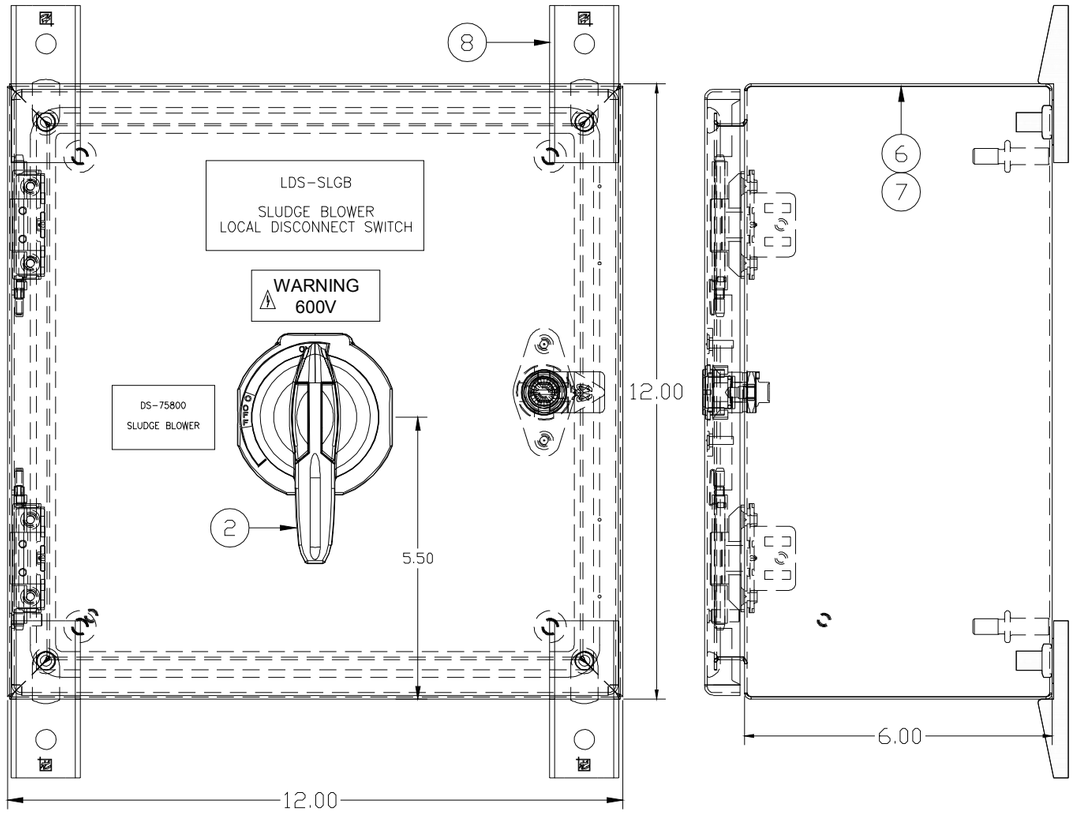

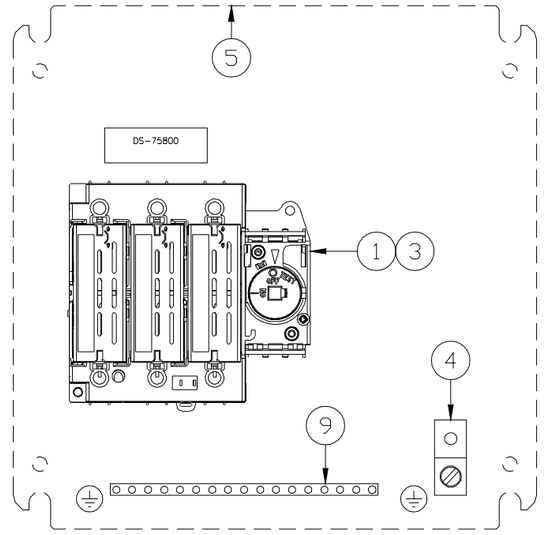

ITEM	QTY	SUB	CATALOG	MFG	DESCRIPTION
1	1	*1	194R-N30-1753	AB	NEXT GENERATION DISCONNECT SWITCH, NON-FUSED, 30A, OPEN STYLE
2		*1	194R-PY	AB	PADLOCKABLE HANDLE NEMA 4X RED/YELLOW
3		*1	194R-S1	AB	OPERATING SHAFT 12 INCHES
4	1		ADR21	BLACKBURN	ALUMINUM GROUND LUG, 14-2/0AWG
5	1		CP1212	HOFFMAN	BACK PLATE 12X12
6	1	*1	CSD12126SS	HOFFMAN	CONCEPT WALL-MOUNT ENCLOSURE 12X12X6 STAINLESS STEEL
7		*1	AGS808	HOFFMAN	GROUND STRAP
8	1		CMFKSS	HOFFMAN	STAINLESS STEEL MOUNTING BRACKET KIT
9	1		N-174-AS	ILSCO	GROUND BAR COOPER

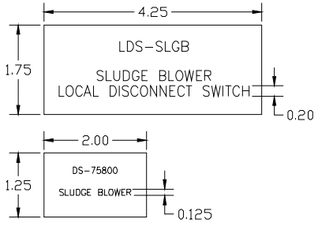

NOTE 1: THIS JUNCTION BOX WILL BE INSTALLED ON WALL (CONTAINER #1)

NOTE 2: THIS JUNCTION BOX APPROX. WEIGHT 20 LBS

- ADHESIVE BACKED LAMINATED PLASTIC
- BLACK LETTERING ON WHITE BACKGROUND
- THICKNESS 1/16"

NOTE:

THE INFORMATION, SPECIFICATIONS AND DATA SHOWN ON THIS PRINT ARE FURNISHED BY AND ARE TO REMAIN THE PROPERTY OF H_2O INNOVATION.

THE PURPOSE OF THIS DOCUMENT IS TO FACILITATE THE INSTALLATION, MAINTENANCE AND OPERATION OF THE EQUIPMENT REPRESENTED BY SAID PRINT. NO OTHER USE OF THIS DOCUMENT SHALL BE MADE WITHOUT EXPRESS WRITTEN CONSENT FROM H_2O INNOVATION.

NO.	DATE	REVISION	DWN BY	ENGINEER	CHK'D BY
.00	29/07/2016	INITIAL VERSION	E.R.		

h2o innovation
knowledge to share du savoir à partager

DWG TITLE
MELIADINE STP
CONTAINERIZED SEWAGE TREATMENT PLANT
ELECTRICAL DRAWINGS

LDS-SLGB
LOCAL DISCONNECT SWITCH
PANEL LAYOUT

JOB NO: U65875

DWG NO: U65875-E02-LDSSLGB-PL

SHEET NO: 15 OF 25

REVISION: .00

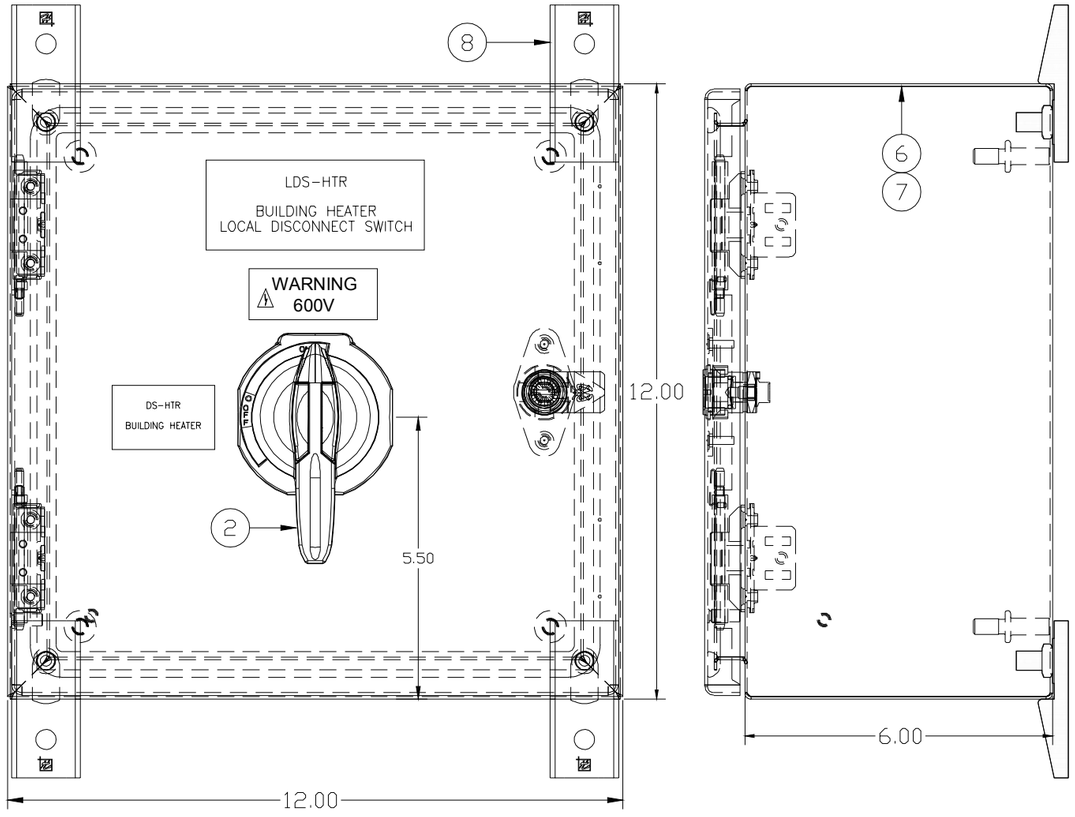

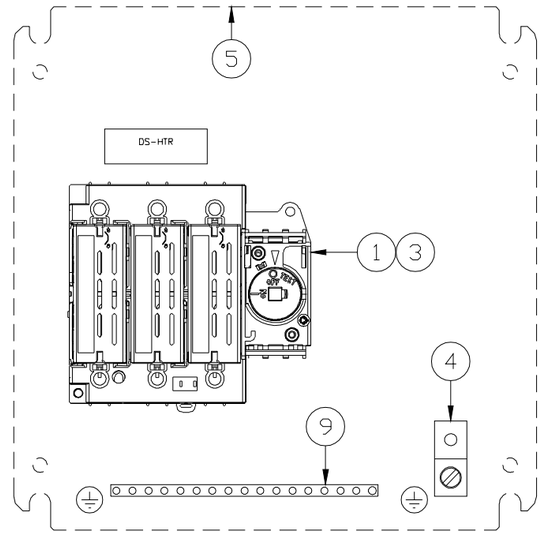

ITEM	QTY	SUB	CATALOG	MFG	DESCRIPTION
1	1	*1	194R-N30-1753	AB	NEXT GENERATION DISCONNECT SWITCH, NON-FUSED, 30A, OPEN STYLE
2		*1	194R-PY	AB	PADLOCKABLE HANDLE NEMA 4X RED/YELLOW
3		*1	194R-S1	AB	OPERATING SHAFT 12 INCHES
4	1		ADR21	BLACKBURN	ALUMINUM GROUND LUG, 14-2/0AWG
5	1		CP1212	HOFFMAN	BACK PLATE 12X12
6	1	*1	CSD12126SS	HOFFMAN	CONCEPT WALL-MOUNT ENCLOSURE 12X12X6 STAINLESS STEEL
7		*1	AGS808	HOFFMAN	GROUND STRAP
8	1		CMFKSS	HOFFMAN	STAINLESS STEEL MOUNTING BRACKET KIT
9	1		N-174-AS	ILSCO	GROUND BAR COOPER

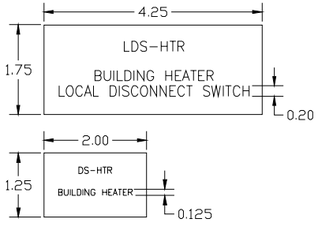

NOTE 1: THIS JUNCTION BOX WILL BE INSTALLED ON WALL (CONTAINER #1)

NOTE 2: THIS JUNCTION BOX APPROX. WEIGHT 20 LBS

- ADHESIVE BACKED LAMINATED PLASTIC
- BLACK LETTERING ON WHITE BACKGROUND
- THICKNESS 1/16"

NOTE:

THE INFORMATION, SPECIFICATIONS AND DATA SHOWN ON THIS PRINT ARE FURNISHED BY AND ARE TO REMAIN THE PROPERTY OF H_2O INNOVATION.

THE PURPOSE OF THIS DOCUMENT IS TO FACILITATE THE INSTALLATION, MAINTENANCE AND OPERATION OF THE EQUIPMENT REPRESENTED BY SAID PRINT. NO OTHER USE OF THIS DOCUMENT SHALL BE MADE WITHOUT EXPRESS WRITTEN CONSENT FROM H_2O INNOVATION.

NO.	DATE	REVISION	DWN BY	ENGINEER	CHK'D BY
.00	29/07/2016	INITIAL VERSION	E.R.		

h2o innovation
knowledge to share du savoir à partager

DWG TITLE
MELIADINE STP
CONTAINERIZED SEWAGE TREATMENT PLANT
ELECTRICAL DRAWINGS

LDS-HTR
LOCAL DISCONNECT SWITCH
PANEL LAYOUT

JOB NO: U65875

DWG NO: U65875-E02-LDSHTR-PL

SHEET NO: 16 OF 25

REVISION: .00

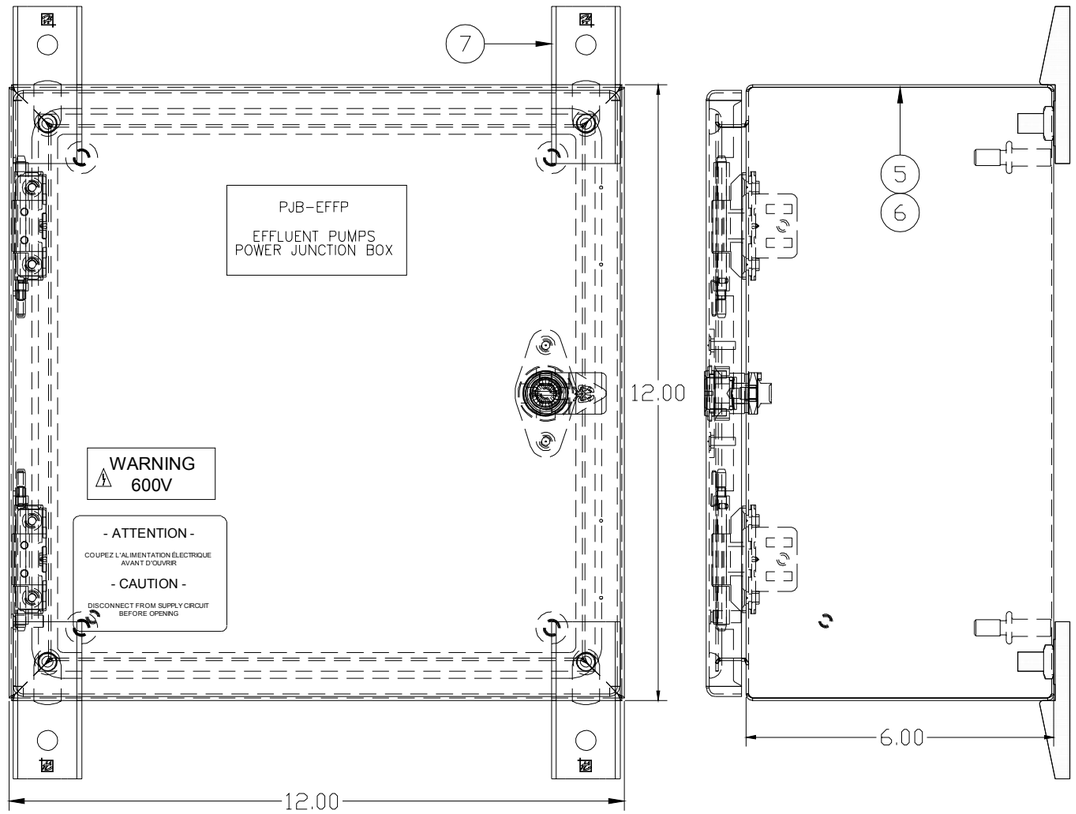

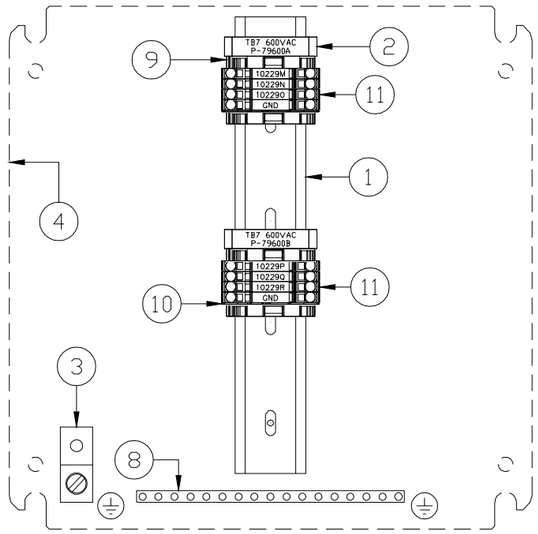

ITEM	QTY	SUB	CATALOG	MFG	DESCRIPTION
1	1		199-DR1	AB	TRACK 35mmX7.5mmX1219mm
2	2		1492-GM35	AB	GROUP MARKING CARRIER
3	1		ADR21	BLACKBURN	ALUMINUM GROUND LUG, 14-2/0AWG
4	1		CP1212	HOFFMAN	BACK PLATE 12X12
5	1	*1	CSD12126SS	HOFFMAN	CONCEPT WALL-MOUNT ENCLOSURE 12X12X6 STAINLESS STEEL
6		*1	AGS808	HOFFMAN	GROUND STRAP
7	1		CMFKSS	HOFFMAN	STAINLESS STEEL MOUNTING BRACKET KIT
8	1		N-174-AS	ILSCO	GROUND BAR COOPER
9	3		249-116	WAGO	SCREWLESS END RETAINER
10	2		2002-1292	WAGO	FEED-THROUGH END BARRIER FOR 2002-1201 TERMINAL BLOCK
11	6		2002-1201	WAGO	SINGLE DECK SPRING CLAMP TERMINAL BLOCK, GRAY
12	2		2002-1207	WAGO	SPRING CLAMP GROUND TERMINAL BLOCK, GREEN/YELLOW

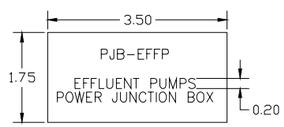

- ADHESIVE BACKED LAMINATED PLASTIC
- BLACK LETTERING ON WHITE BACKGROUND
- THICKNESS 1/16"

NOTE 1: THIS JUNCTION BOX WILL BE INSTALLED ON WALL (CONTAINER #2)

NOTE 2: THIS JUNCTION BOX APPROX. WEIGHT 15 LBS

NOTE:

THE INFORMATION, SPECIFICATIONS AND DATA SHOWN ON THIS PRINT ARE FURNISHED BY AND ARE TO REMAIN THE PROPERTY OF H_2O INNOVATION.

THE PURPOSE OF THIS DOCUMENT IS TO FACILITATE THE INSTALLATION, MAINTENANCE AND OPERATION OF THE EQUIPMENT REPRESENTED BY SAID PRINT. NO OTHER USE OF THIS DOCUMENT SHALL BE MADE WITHOUT EXPRESS WRITTEN CONSENT FROM H_2O INNOVATION.

NO.	DATE	REVISION	DWN BY	ENGINEER	CHK'D BY
.00	29/07/2016	INITIAL VERSION	E.R.		

h2o innovation
knowledge to share du savoir à partager

DWG TITLE
MELIADINE STP
CONTAINERIZED SEWAGE
TREATMENT PLANT
ELECTRICAL DRAWINGS

PJB-EFFP
POWER JUNCTION BOX
PANEL LAYOUT

JOB NO
U65875

DWG NO
U65875-E02-PJBEFFP-PL

SHEET NO	REVISION
17 OF 25	.00

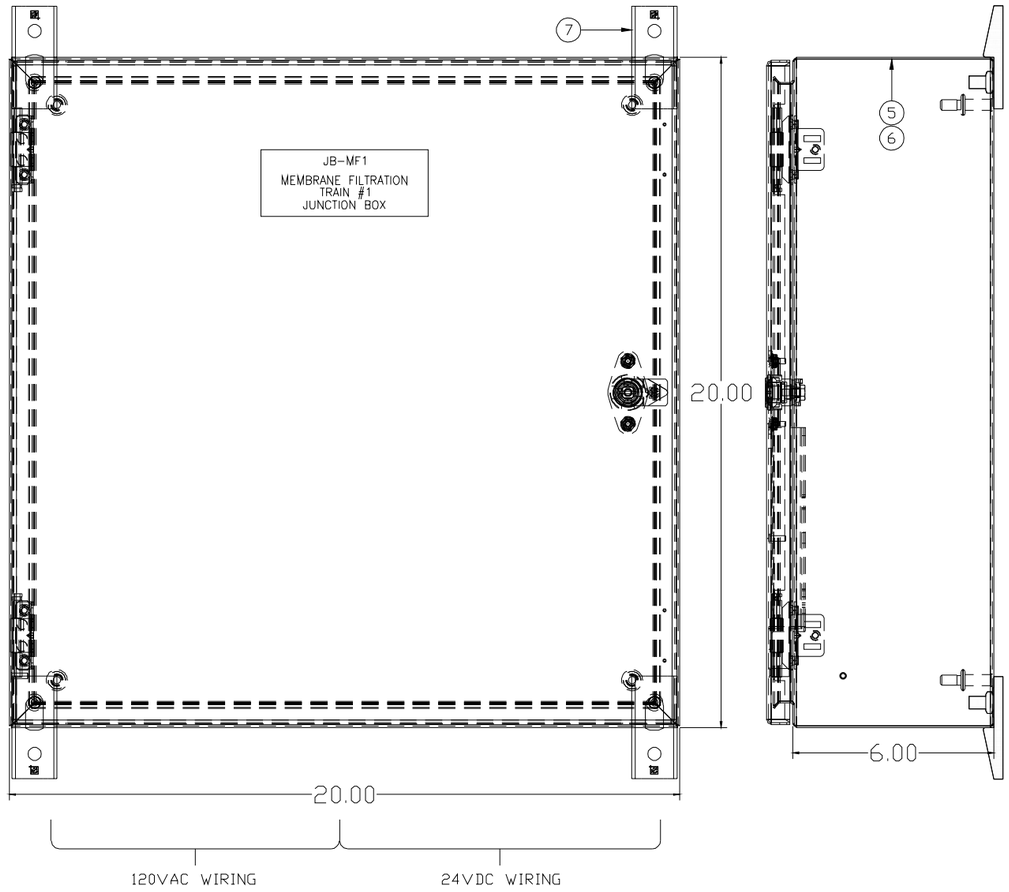

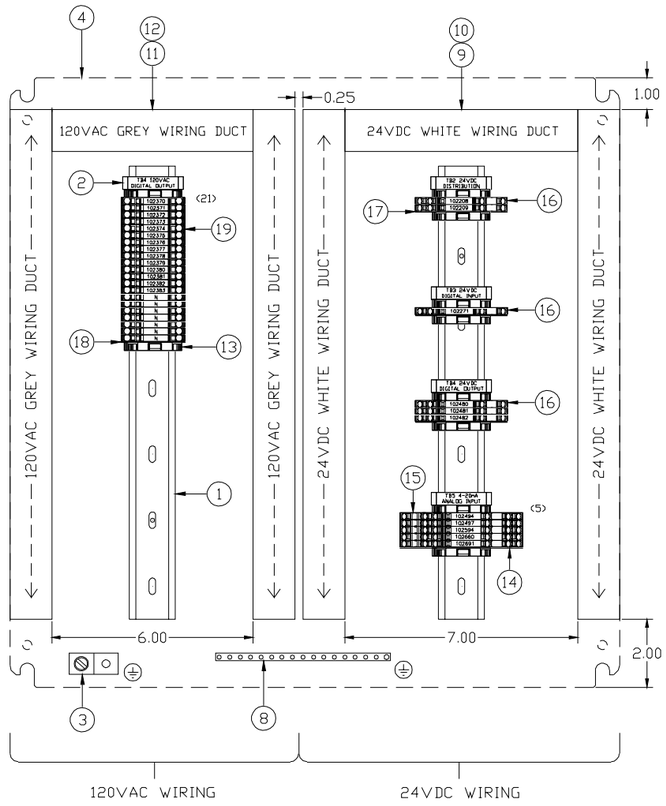

ITEM	QTY	SUB	CATALOG	MFG	DESCRIPTION
1	2		199-DR1	AB	TRACK 35mmX7.5mmX1219mm
2	5		1492-GM35	AB	GROUP MARKING CARRIER
3	1		ADR21	BLACKBURN	ALUMINUM GROUND LUG, 14-2/0AWG
4	1		CP2020	HOFFMAN	BACK PLATE 20X20
5	1	*1	CSD20206SS	HOFFMAN	STAINLESS STEEL CONCEPT WALL-MOUNT ENCLOSURE, 20X20X6, TYPE4X, SS304
6		*1	AGS808	HOFFMAN	GROUND STRAP
7	1		CMFKSS	HOFFMAN	STAINLESS STEEL MOUNTING BRACKET KIT
8	1		N-174-AS	ILSCO	GROUND BAR COOPER
9	1	*1	TY1X3NPW6	THOMAS & BETTS	WIRING DUCT 1X3" WHITE
10		*1	TY1CPW6	THOMAS & BETTS	WIRING DUCT COVER 1" WHITE
11	1	*1	TY1X3NPG6	THOMAS & BETTS	WIRING DUCT 1X3" GRAY
12		*1	TY1CPG6	THOMAS & BETTS	WIRING DUCT COVER 1" GRAY
13	10		249-116	WAGO	SCREWLESS END RETAINER
14	1		2002-3292	WAGO	FEED-TROUGH END BARRIER FOR 2002-3201 TERMINAL BLOCK
15	5		2002-3201	WAGO	TRIPLE DECK SPRING CLAMP TERMINAL BLOCK, GRAY
16	6		2002-2201	WAGO	DOUBLE DECK SPRING CLAMP TERMINAL BLOCK, GRAY
17	3		2002-2292	WAGO	FEED-TROUGH END BARRIER FOR 2002-2201 TERMINAL BLOCK
18	1		2002-1292	WAGO	FEED-TROUGH END BARRIER FOR 2002-1201 TERMINAL BLOCK
19	21		2002-1201	WAGO	SINGLE DECK SPRING CLAMP TERMINAL BLOCK, GRAY

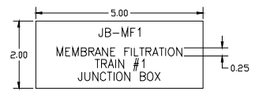

- ADHESIVE BACKED LAMINATED PLASTIC
- BLACK LETTERING ON WHITE BACKGROUND
- THICKNESS 1/16"

NOTE 1: THIS JUNCTION BOX WILL BE INSTALLED ON WALL (CONTAINER #2)

NOTE 2: THIS JUNCTION BOX APPROX. WEIGHT 40 LBS

NOTE:

THE INFORMATION, SPECIFICATIONS AND DATA SHOWN ON THIS PRINT ARE FURNISHED BY AND ARE TO REMAIN THE PROPERTY OF H_2O INNOVATION.

THE PURPOSE OF THIS DOCUMENT IS TO FACILITATE THE INSTALLATION, MAINTENANCE AND OPERATION OF THE EQUIPMENT REPRESENTED BY SAID PRINT. NO OTHER USE OF THIS DOCUMENT SHALL BE MADE WITHOUT EXPRESS WRITTEN CONSENT FROM H_2O INNOVATION.

NO.	DATE			DWN BY	ENGINEER	CHK'D BY
.00	29/07/2016	INITIAL VERSION		E.R.		

h2o innovation
knowledge to share du savoir à partager

DWG TITLE
MELIADINE STP
CONTAINERIZED SEWAGE
TREATMENT PLANT
ELECTRICAL DRAWINGS

JB-MF1
JUNCTION BOX
PANEL LAYOUT

JOB NO
U65875

DWG NO
U65875-E02-JBMF1-PL

SHEET NO	REVISION
18 OF 25	.00

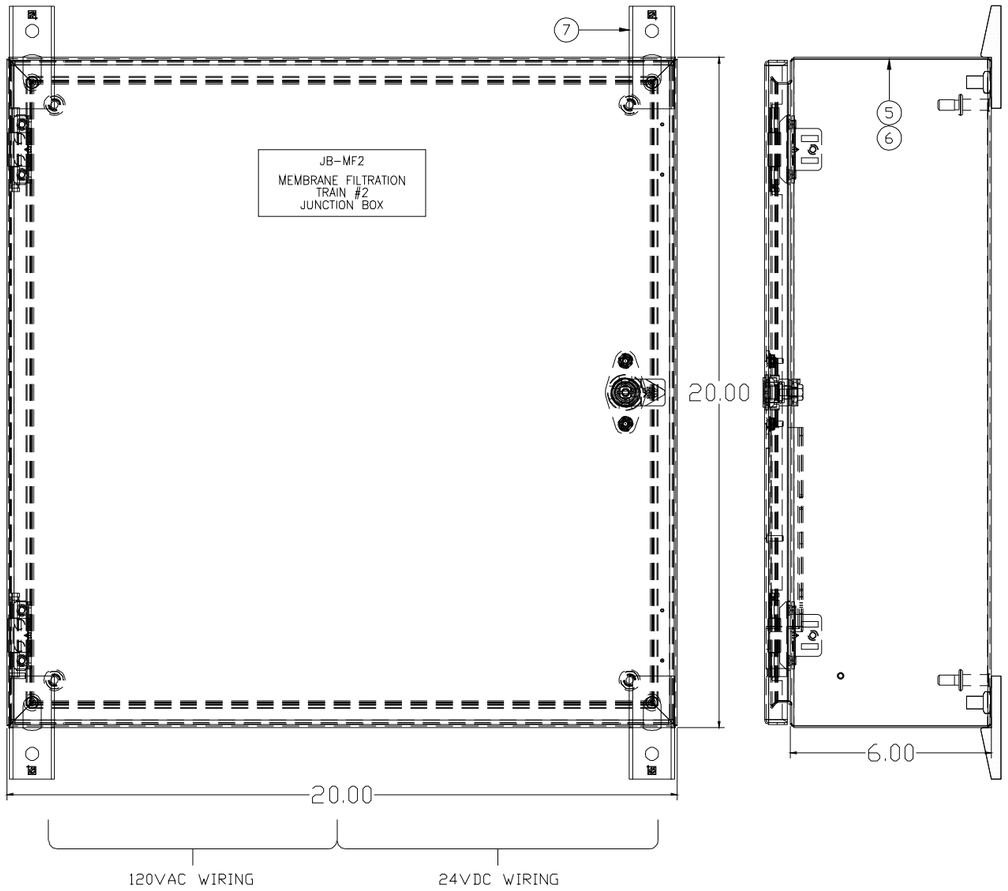

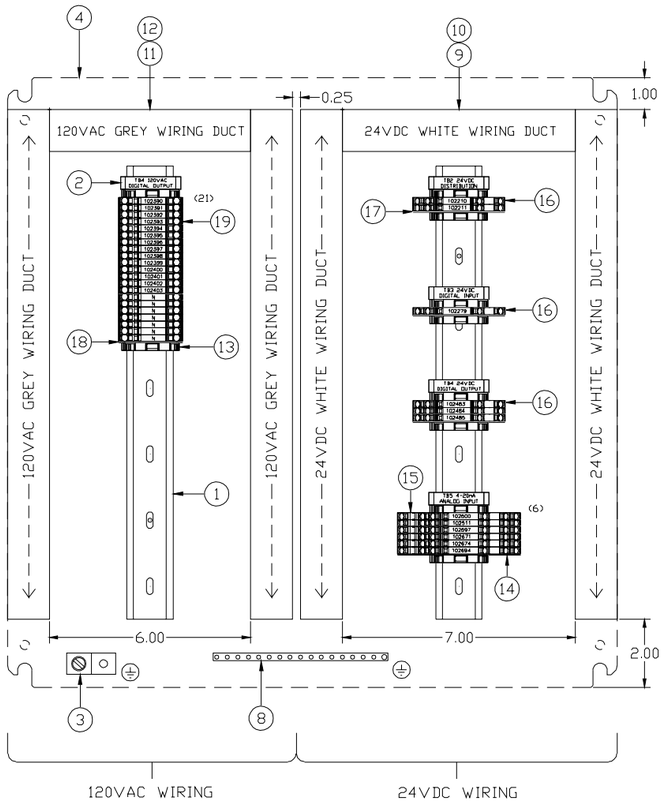

ITEM	QTY	SUB	CATALOG	MFG	DESCRIPTION
1	2		199-DR1	AB	TRACK 35mmX7.5mmX1219mm
2	5		1492-GM35	AB	GROUP MARKING CARRIER
3	1		ADR21	BLACKBURN	ALUMINUM GROUND LUG, 14-2/0AWG
4	1		CP2020	HOFFMAN	BACK PLATE 20X20
5	1	*1	CSD20206SS	HOFFMAN	STAINLESS STEEL CONCEPT WALL-MOUNT ENCLOSURE, 20X20X6, TYPE4X, SS304
6		*1	AGS808	HOFFMAN	GROUND STRAP
7	1		CMFKSS	HOFFMAN	STAINLESS STEEL MOUNTING BRACKET KIT
8	1		N-174-AS	ILSCO	GROUND BAR COOPER
9	1	*1	TY1X3NPW6	THOMAS & BETTS	WIRING DUCT 1X3" WHITE
10		*1	TY1CPW6	THOMAS & BETTS	WIRING DUCT COVER 1" WHITE
11	1	*1	TY1X3NPG6	THOMAS & BETTS	WIRING DUCT 1X3" GRAY
12		*1	TY1CPG6	THOMAS & BETTS	WIRING DUCT COVER 1" GRAY
13	9		249-116	WAGO	SCREWLESS END RETAINER
14	1		2002-3292	WAGO	FEED-TROUGH END BARRIER FOR 2002-3201 TERMINAL BLOCK
15	6		2002-3201	WAGO	TRIPLE DECK SPRING CLAMP TERMINAL BLOCK, GRAY
16	6		2002-2201	WAGO	DOUBLE DECK SPRING CLAMP TERMINAL BLOCK, GRAY
17	3		2002-2292	WAGO	FEED-TROUGH END BARRIER FOR 2002-2201 TERMINAL BLOCK
18	1		2002-1292	WAGO	FEED-TROUGH END BARRIER FOR 2002-1201 TERMINAL BLOCK
19	21		2002-1201	WAGO	SINGLE DECK SPRING CLAMP TERMINAL BLOCK, GRAY

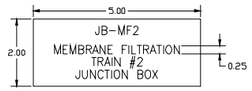

- ADHESIVE BACKED LAMINATED PLASTIC
- BLACK LETTERING ON WHITE BACKGROUND
- THICKNESS 1/16"

NOTE 1: THIS JUNCTION BOX WILL BE INSTALLED ON WALL VIA MOUNTING BRACKETS (CONTAINER #2)

NOTE 2: THIS JUNCTION BOX APPROX. WEIGHT 40 LBS

NOTE:

THE INFORMATION, SPECIFICATIONS AND DATA SHOWN ON THIS PRINT ARE FURNISHED BY AND ARE TO REMAIN THE PROPERTY OF H_2O INNOVATION.

THE PURPOSE OF THIS DOCUMENT IS TO FACILITATE THE INSTALLATION, MAINTENANCE AND OPERATION OF THE EQUIPMENT REPRESENTED BY SAID PRINT. NO OTHER USE OF THIS DOCUMENT SHALL BE MADE WITHOUT EXPRESS WRITTEN CONSENT FROM H_2O INNOVATION.

NO.	DATE		DWN BY	ENGINEER	CHK'D BY
.00	29/07/2016	INITIAL VERSION	E.R.		

h2o innovation
knowledge to share du savoir à partager

DWG TITLE
MELIADINE STP
CONTAINERIZED SEWAGE
TREATMENT PLANT
ELECTRICAL DRAWINGS

JB-MF2
JUNCTION BOX
PANEL LAYOUT

JOB NO: U65875

DWG NO: U65875-E02-JBMF2-PL

SHEET NO: 19 OF 25

REVISION: .00

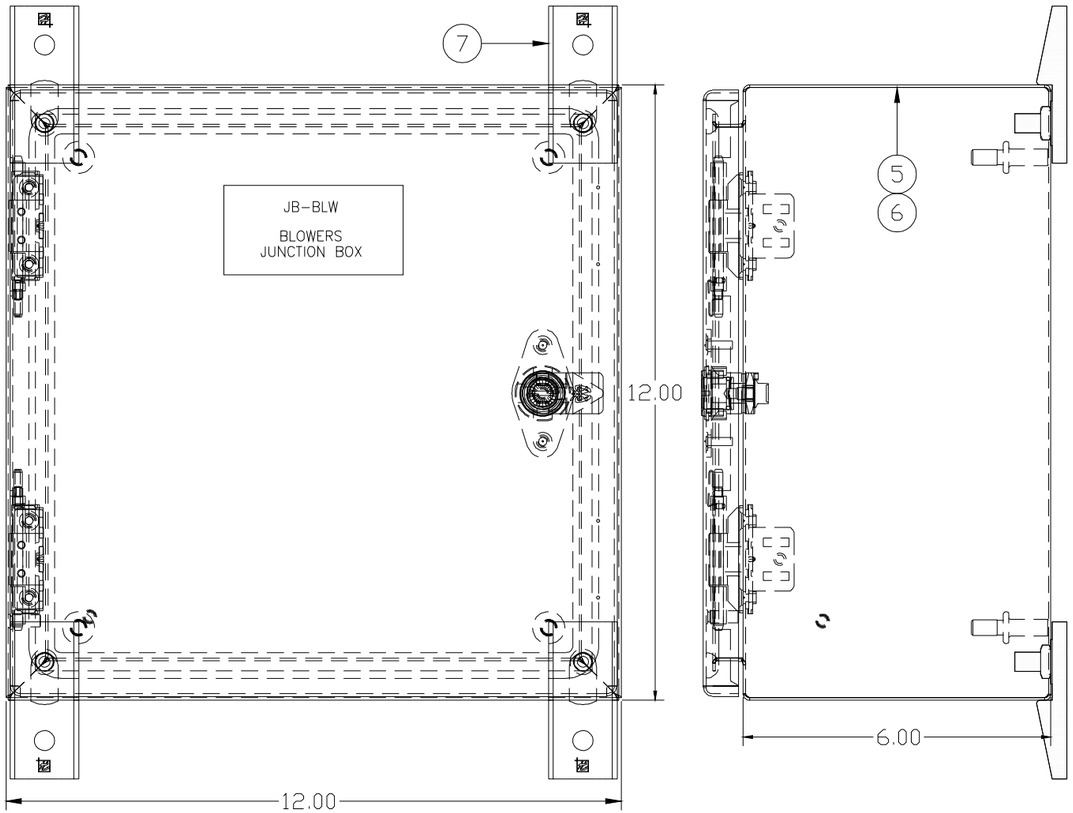

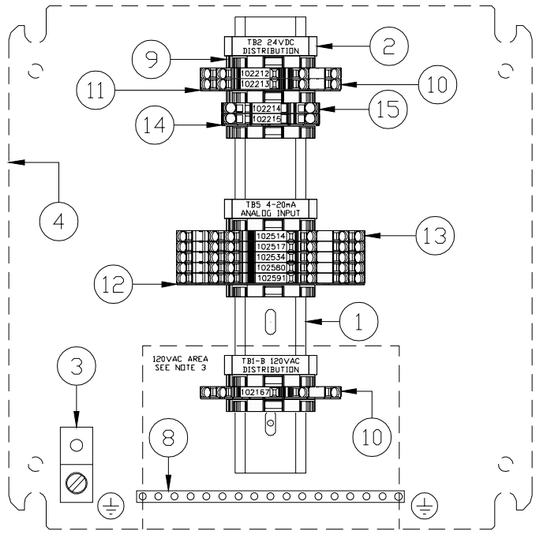

ITEM	QTY	SUB	CATALOG	MFG	DESCRIPTION
1	1		199-DR1	AB	TRACK 35mmX7.5mmX1219mm
2	3		1492-GM35	AB	GROUP MARKING CARRIER
3	1		ADR21	BLACKBURN	ALUMINUM GROUND LUG, 14-2/0AWG
4	1		CP1212	HOFFMAN	BACK PLATE 12X12
5	1	*1	CSD12126SS	HOFFMAN	CONCEPT WALL-MOUNT ENCLOSURE 12X12X6 STAINLESS STEEL
6		*1	AGS808	HOFFMAN	GROUND STRAP
7	1		CMFKSS	HOFFMAN	STAINLESS STEEL MOUNTING BRACKET KIT
8	1		N-174-AS	ILSCO	GROUND BAR COOPER
9	6		249-116	WAGO	SCREWLESS END RETAINER
10	3		2002-2201	WAGO	DOUBLE DECK SPRING CLAMP TERMINAL BLOCK, GRAY
11	2		2002-2292	WAGO	FEED-TROUGH END BARRIER FOR 2002-2201 TERMINAL BLOCK
12	1		2002-3292	WAGO	FEED-TROUGH END BARRIER FOR 2002-3201 TERMINAL BLOCK
13	5		2002-3201	WAGO	TRIPLE DECK SPRING CLAMP TERMINAL BLOCK, GRAY
14	1		2002-1292	WAGO	FEED-TROUGH END BARRIER FOR 2002-1201 TERMINAL BLOCK
15	2		2002-1201	WAGO	SINGLE DECK SPRING CLAMP TERMINAL BLOCK, GRAY

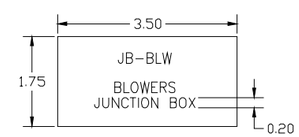

- ADHESIVE BACKED LAMINATED PLASTIC
- BLACK LETTERING ON WHITE BACKGROUND
- THICKNESS 1/16"

NOTE 1: THIS JUNCTION BOX WILL BE INSTALLED ON WALL (CONTAINER #2)

NOTE 2: THIS JUNCTION BOX APPROX. WEIGHT 15 LBS

NOTE 3: 120VAC AND 24VDC WIRES SHOULD NOT CROSS EACH OTHER

NOTE:

THE INFORMATION, SPECIFICATIONS AND DATA SHOWN ON THIS PRINT ARE FURNISHED BY AND ARE TO REMAIN THE PROPERTY OF H_2O INNOVATION.

THE PURPOSE OF THIS DOCUMENT IS TO FACILITATE THE INSTALLATION, MAINTENANCE AND OPERATION OF THE EQUIPMENT REPRESENTED BY SAID PRINT. NO OTHER USE OF THIS DOCUMENT SHALL BE MADE WITHOUT EXPRESS WRITTEN CONSENT FROM H_2O INNOVATION.

NO.	DATE	REVISION	DWN BY	ENGINEER	CHK'D BY
.00	29/07/2016	INITIAL VERSION	E.R.		

h2o innovation
knowledge to share.du savoir à partager

DWG TITLE
MELIADINE STP
CONTAINERIZED SEWAGE
TREATMENT PLANT
ELECTRICAL DRAWINGS

JB-BLW
JUNCTION BOX
PANEL LAYOUT

JOB NO
U65875

DWG NO
U65875-E02-JBBLW-PL

SHEET NO
20 OF 25

REVISION
.00

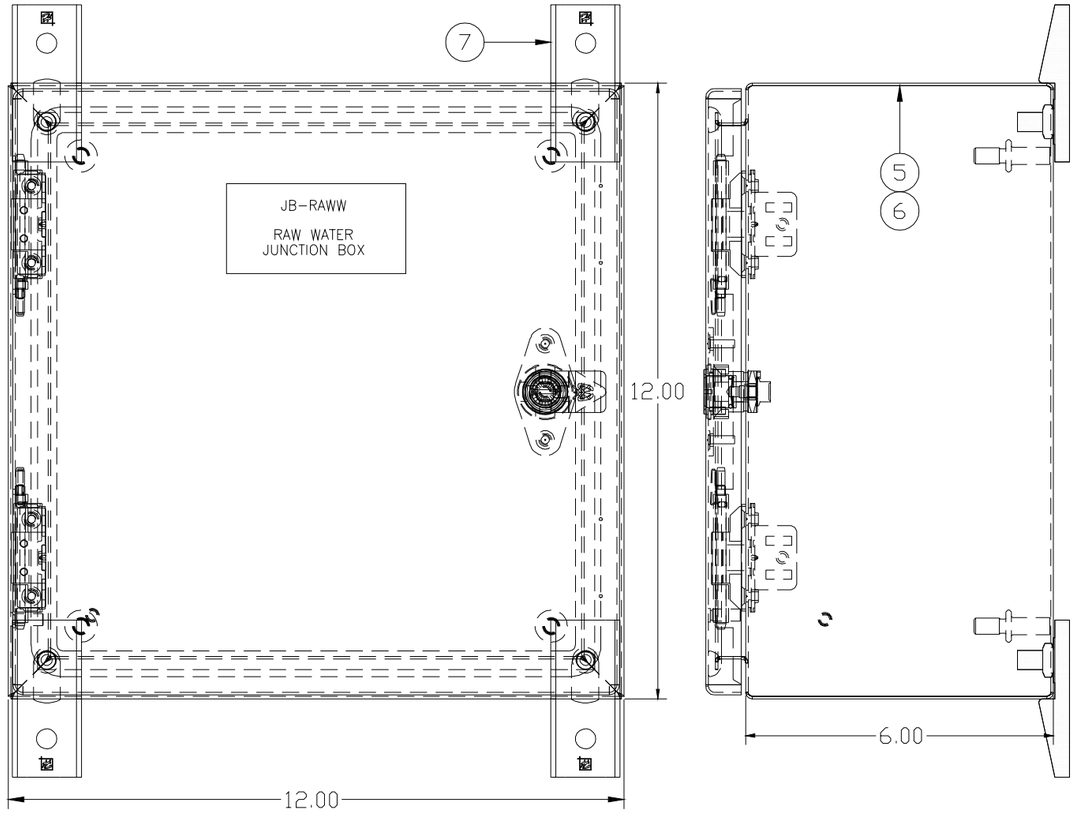

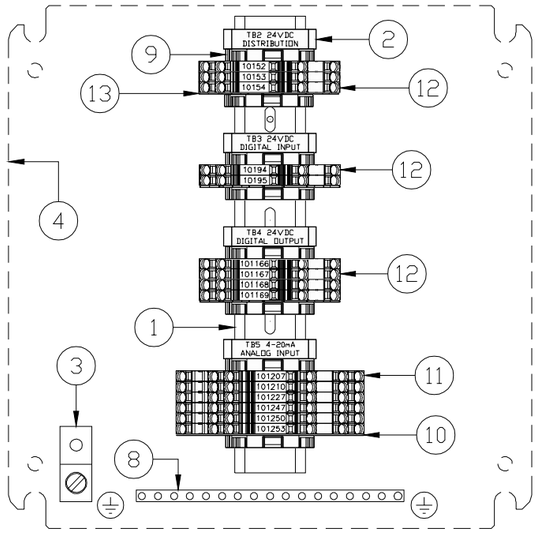

ITEM	QTY	SUB	CATALOG	MFG	DESCRIPTION
1	1		199-DR1	AB	TRACK 35mmX7.5mmX1219mm
2	4		1492-GM35	AB	GROUP MARKING CARRIER
3	1		ADR21	BLACKBURN	ALUMINUM GROUND LUG, 14-2/0AWG
4	1		CP1212	HOFFMAN	BACK PLATE 12X12
5	1	*1	CSD12126SS	HOFFMAN	CONCEPT WALL-MOUNT ENCLOSURE 12X12X6 STAINLESS STEEL
6		*1	AGS808	HOFFMAN	GROUND STRAP
7	1		CMFKSS	HOFFMAN	STAINLESS STEEL MOUNTING BRACKET KIT
8	1		N-174-AS	ILSCO	GROUND BAR COOPER
9	8		249-116	WAGO	SCREWLESS END RETAINER
10	1		2002-3292	WAGO	FEED-TROUGH END BARRIER FOR 2002-3201 TERMINAL BLOCK
11	6		2002-3201	WAGO	TRIPLE DECK SPRING CLAMP TERMINAL BLOCK, GRAY
12	9		2002-2201	WAGO	DOUBLE DECK SPRING CLAMP TERMINAL BLOCK, GRAY
13	3		2002-2292	WAGO	FEED-TROUGH END BARRIER FOR 2002-2201 TERMINAL BLOCK

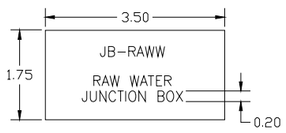

- ADHESIVE BACKED LAMINATED PLASTIC
- BLACK LETTERING ON WHITE BACKGROUND
- THICKNESS 1/16"

NOTE 1: THIS JUNCTION BOX WILL BE INSTALLED ON THE SUMP TANK SKID (CONTAINER #1)

NOTE 2: THIS JUNCTION BOX APPROX. WEIGHT 15 LBS

NOTE:

THE INFORMATION, SPECIFICATIONS AND DATA SHOWN ON THIS PRINT ARE FURNISHED BY AND ARE TO REMAIN THE PROPERTY OF H_2O INNOVATION.

THE PURPOSE OF THIS DOCUMENT IS TO FACILITATE THE INSTALLATION, MAINTENANCE AND OPERATION OF THE EQUIPMENT REPRESENTED BY SAID PRINT. NO OTHER USE OF THIS DOCUMENT SHALL BE MADE WITHOUT EXPRESS WRITTEN CONSENT FROM H_2O INNOVATION.

NO.	DATE (dd/mm/yyyy)	REVISION	DWN BY	ENGINEER	CHK'D BY
.00	29/07/2016	INITIAL VERSION	E.R.		

h2o innovation
knowledge to share as water is precious

DWG TITLE

MELIADINE STP
CONTAINERIZED SEWAGE
TREATMENT PLANT
ELECTRICAL DRAWINGS

JB-RAWW
JUNCTION BOX
PANEL LAYOUT

JOB NO: U65875

DWG NO: U65875-E02-JBRAWW-PL

SHEET NO: 21 OF 25

REVISION: .00

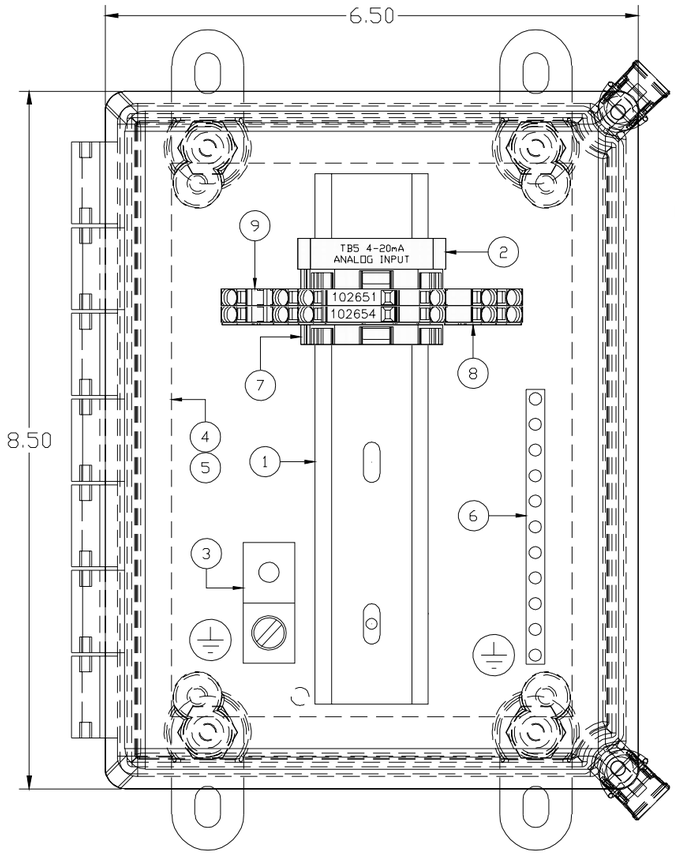

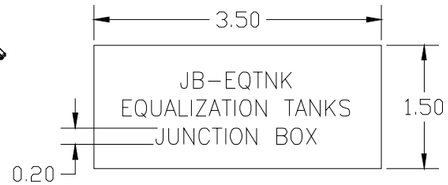

- ADHESIVE BACKED LAMINATED PLASTIC
- BLACK LETTERING ON WHITE BACKGROUND
- THICKNESS 1/16"

NOTE 1: THIS JUNCTION BOX WILL BE INSTALLED ON THE EQ TANK

NOTE 2: ALL CONNECTIONS WILL BE THROUGH THE BOTTOM

NOTE 3: THIS JUNCTION BOX APPROX. WEIGHT 10 LBS

ITEM	QTY	SUB	CATALOG	MFG	DESCRIPTION
1	1		199-DR1	AB	TRACK 35mmX7.5mmX1219mm
2	1		1492-GM35	AB	GROUP MARKING CARRIER
3	1		ADR21	BLACKBURN	ALUMINUM GROUND LUG, 14-2/0AWG
4	1	*1	A864CHSCFG	HOFFMAN	FIBERGLASS CONTINUOUS HINGE TYPE 4X 8X6X4
5		*1	A8P6	HOFFMAN	BACK PLATE 8X6
6	1		N-174-AS	ILSCO	GROUND BAR COOPER
7	2		249-116	WAGO	SCREWLESS END RETAINER
8	1		2002-3292	WAGO	FEED-TROUGH END BARRIER FOR 2002-3201 TERMINAL BLOCK
9	2		2002-3201	WAGO	TRIPLE DECK SPRING CLAMP TERMINAL BLOCK, GRAY

NOTE:

THE INFORMATION, SPECIFICATIONS AND DATA SHOWN ON THIS PRINT ARE FURNISHED BY AND ARE TO REMAIN THE PROPERTY OF H_2O INNOVATION.

THE PURPOSE OF THIS DOCUMENT IS TO FACILITATE THE INSTALLATION, MAINTENANCE AND OPERATION OF THE EQUIPMENT REPRESENTED BY SAID PRINT. NO OTHER USE OF THIS DOCUMENT SHALL BE MADE WITHOUT EXPRESS WRITTEN CONSENT FROM H_2O INNOVATION.

NO.	DATE	REVISION	DWN BY	ENGINEER	CHK'D BY
.00	29/07/2016	INITIAL VERSION	E.R.		

h2o innovation
knowledge to share du savoir à partager

DWG TITLE
MELIADINE STP
CONTAINERIZED SEWAGE
TREATMENT PLANT
ELECTRICAL DRAWINGS

JB-EQTNK
JUNCTION BOX
PANEL LAYOUT

JOB NO: U65875

DWG NO: U65875-E02-JBEQTNK-PL

SHEET NO: 22 OF 25

REVISION: .00

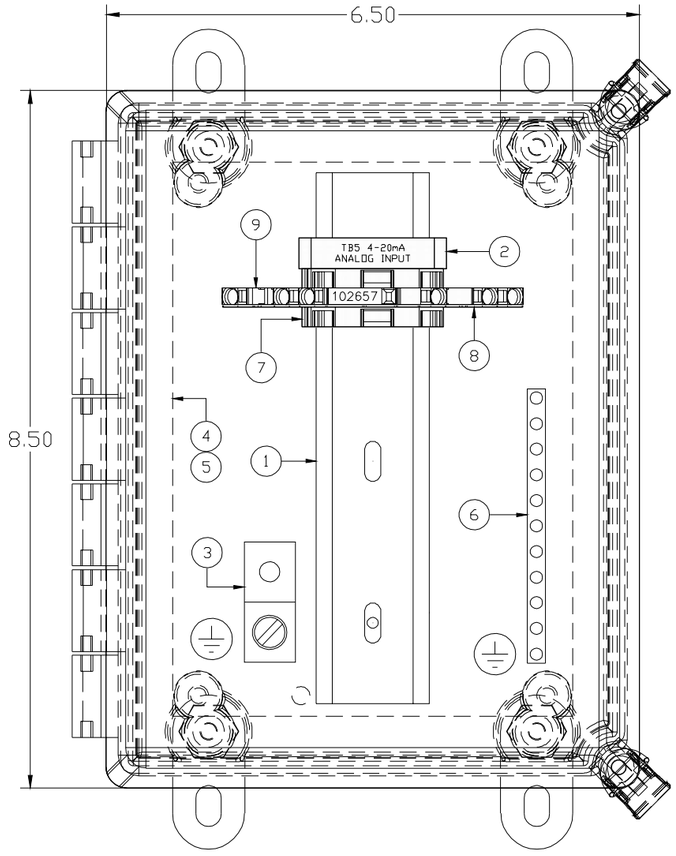

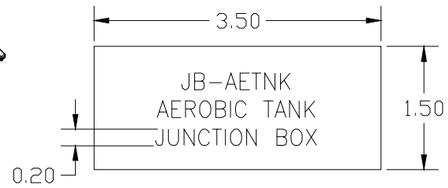

- ADHESIVE BACKED LAMINATED PLASTIC
- BLACK LETTERING ON WHITE BACKGROUND
- THICKNESS 1/16"

NOTE 1: THIS JUNCTION BOX WILL BE INSTALLED ON THE AEROBIC TANK

NOTE 2: ALL CONNECTIONS WILL BE THROUGH THE BOTTOM

NOTE 3: THIS JUNCTION BOX APPROX. WEIGHT 10 LBS

ITEM	QTY	SUB	CATALOG	MFG	DESCRIPTION
1	1		199-DR1	AB	TRACK 35mmX7.5mmX1219mm
2	1		1492-GM35	AB	GROUP MARKING CARRIER
3	1		ADR21	BLACKBURN	ALUMINUM GROUND LUG, 14-2/0AWG
4	1	*1	A864CHSCFG	HOFFMAN	FIBERGLASS CONTINUOUS HINGE TYPE 4X 8X6X4
5		*1	A8P6	HOFFMAN	BACK PLATE 8X6
6	1		N-174-AS	ILSCO	GROUND BAR COOPER
7	2		249-116	WAGO	SCREWLESS END RETAINER
8	1		2002-3292	WAGO	FEED-TROUGH END BARRIER FOR 2002-3201 TERMINAL BLOCK
9	1		2002-3201	WAGO	TRIPLE DECK SPRING CLAMP TERMINAL BLOCK, GRAY

NOTE:

THE INFORMATION, SPECIFICATIONS AND DATA SHOWN ON THIS PRINT ARE FURNISHED BY AND ARE TO REMAIN THE PROPERTY OF H_2O INNOVATION.

THE PURPOSE OF THIS DOCUMENT IS TO FACILITATE THE INSTALLATION, MAINTENANCE AND OPERATION OF THE EQUIPMENT REPRESENTED BY SAID PRINT. NO OTHER USE OF THIS DOCUMENT SHALL BE MADE WITHOUT EXPRESS WRITTEN CONSENT FROM H_2O INNOVATION.

NO.	DATE	REVISION	DWN BY	ENGINEER	CHK'D BY
.00	29/07/2016	INITIAL VERSION	E.R.		

DWG TITLE

MELIADINE STP
CONTAINERIZED SEWAGE
TREATMENT PLANT
ELECTRICAL DRAWINGS

JB-AETNK
JUNCTION BOX
PANEL LAYOUT

JOB NO: U65875

DWG NO: U65875-E02-JBAETNK-PL

SHEET NO: 23 OF 25

REVISION: .00

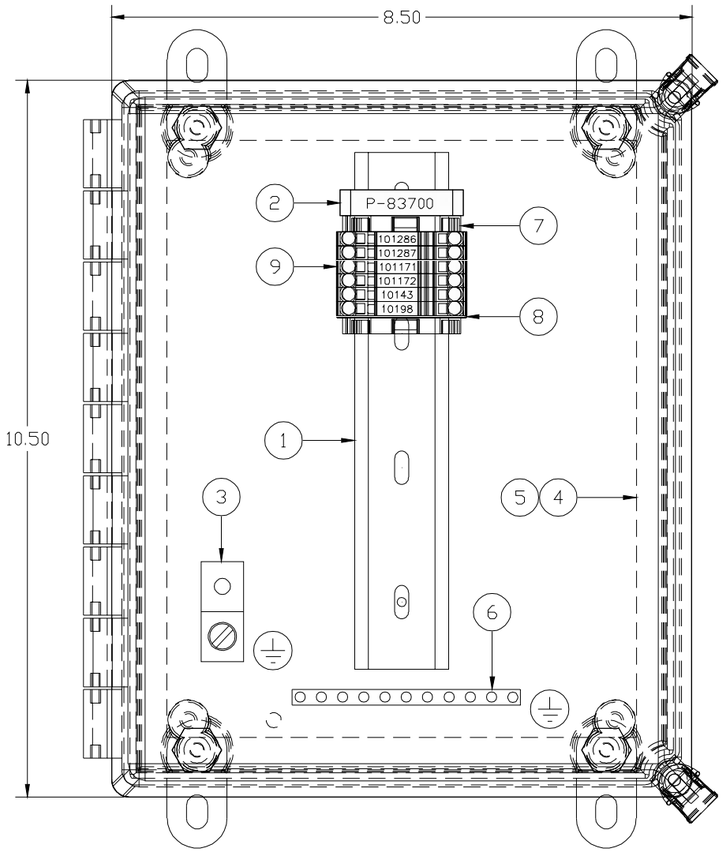

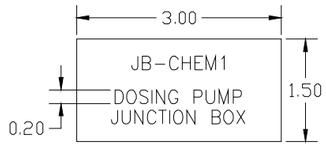

- ADHESIVE BACKED LAMINATED PLASTIC
- BLACK LETTERING ON WHITE BACKGROUND
- THICKNESS 1/16"

NOTE 1: THIS JUNCTION BOX WILL BE INSTALLED ON THE CITRIC ACID DOSING SKID (CONTAINER #1)

NOTE 2: THIS JUNCTION BOX APPROX. WEIGHT 10 LBS

ITEM	QTY	SUB	CATALOG	MFG	DESCRIPTION
1	1		199-DR1	AB	TRACK 35mmX7.5mmX1219mm
2	1		1492-GM35	AB	GROUP MARKING CARRIER
3	1		ADR21	BLACKBURN	ALUMINUM GROUND LUG, 14-2/0AWG
4	1	*1	A1086CHQRFG	HOFFMAN	FIBERGLASS CONTINUOUS HINGE TYPE 4X 10X8X6
5		*1	A10P8	HOFFMAN	BACK PLATE 10X8
6	1		N-174-AS	ILSCO	GROUND BAR COOPER
7	2		249-116	WAGO	SCREWLESS END RETAINER
8	1		2002-1292	WAGO	FEED-TROUGH END BARRIER FOR 2002-1201 TERMINAL BLOCK
9	6		2002-1201	WAGO	SINGLE DECK SPRING CLAMP TERMINAL BLOCK, GRAY

NOTE:

THE INFORMATION, SPECIFICATIONS AND DATA SHOWN ON THIS PRINT ARE FURNISHED BY AND ARE TO REMAIN THE PROPERTY OF H_2O INNOVATION.

THE PURPOSE OF THIS DOCUMENT IS TO FACILITATE THE INSTALLATION, MAINTENANCE AND OPERATION OF THE EQUIPMENT REPRESENTED BY SAID PRINT. NO OTHER USE OF THIS DOCUMENT SHALL BE MADE WITHOUT EXPRESS WRITTEN CONSENT FROM H_2O INNOVATION.

NO.	DATE	REVISION	DWN BY	ENGINEER	CHK'D BY
.00	29/07/2016	INITIAL VERSION	E.R.		

h2o innovation
knowledge to share du savoir à partager

DWG TITLE
MELIADINE STP
CONTAINERIZED SEWAGE TREATMENT PLANT
ELECTRICAL DRAWINGS

JB-CHEM1
JUNCTION BOX
PANEL LAYOUT

JOB NO
U65875

DWG NO
U65875-E02-JBCHEM1-PL

SHEET NO
24 OF 25

REVISION
.00

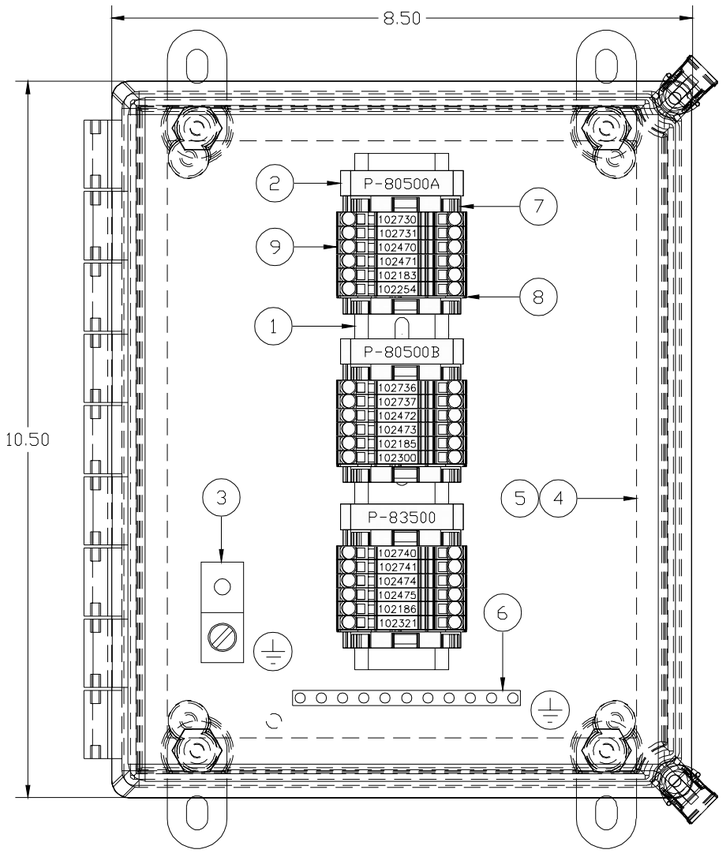

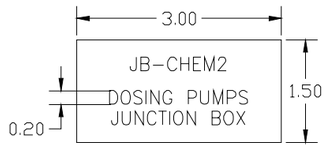

- ADHESIVE BACKED LAMINATED PLASTIC
- BLACK LETTERING ON WHITE BACKGROUND
- THICKNESS 1/16"

NOTE 1: THIS JUNCTION BOX WILL BE INSTALLED ON THE DOSING SKID (CONTAINER #2)

NOTE 2: THIS JUNCTION BOX APPROX. WEIGHT 10 LBS

ITEM	QTY	SUB	CATALOG	MFG	DESCRIPTION
1	1		199-DR1	AB	TRACK 35mmX7.5mmX1219mm
2	3		1492-GM35	AB	GROUP MARKING CARRIER
3	1		ADR21	BLACKBURN	ALUMINUM GROUND LUG, 14-2/0AWG
4	1	*1	A1086CHQRFG	HOFFMAN	FIBERGLASS CONTINUOUS HINGE TYPE 4X 10X8X6
5		*1	A10P8	HOFFMAN	BACK PLATE 10X8
6	1		N-174-AS	ILSCO	GROUND BAR COOPER
7	6		249-116	WAGO	SCREWLESS END RETAINER
8	3		2002-1292	WAGO	FEED-TROUGH END BARRIER FOR 2002-1201 TERMINAL BLOCK
9	18		2002-1201	WAGO	SINGLE DECK SPRING CLAMP TERMINAL BLOCK, GRAY

NOTE:

THE INFORMATION, SPECIFICATIONS AND DATA SHOWN ON THIS PRINT ARE FURNISHED BY AND ARE TO REMAIN THE PROPERTY OF H_2O INNOVATION.

THE PURPOSE OF THIS DOCUMENT IS TO FACILITATE THE INSTALLATION, MAINTENANCE AND OPERATION OF THE EQUIPMENT REPRESENTED BY SAID PRINT. NO OTHER USE OF THIS DOCUMENT SHALL BE MADE WITHOUT EXPRESS WRITTEN CONSENT FROM H_2O INNOVATION.

NO.	DATE	REVISION	DWN BY	ENGINEER	CHK'D BY
.00	29/07/2016	INITIAL VERSION	E.R.		

h2o innovation
knowledge to share du savoir à partager

DWG TITLE

MELIADINE STP
CONTAINERIZED SEWAGE
TREATMENT PLANT
ELECTRICAL DRAWINGS

JB-CHEM2
JUNCTION BOX
PANEL LAYOUT

JOB NO: U65875

DWG NO: U65875-E02-JBCHEM2-PL

SHEET NO: 25 OF 25

REVISION: .00

SECTION 10 - VENDOR O&M DATA AND MANUALS

10.1 - INDEX OF TABS

Manufacturer	Equipment	Tab
ABB	Pressure Transmitter	A1-1
ABB	Turbidimeter	A1-2
AMT Gorman Rupp	Sewage Pump	A2
Asahi	Ball Valve	A3
Asco	Solenoid Valve	A4
Burkert	Solenoid Valve	B1
Chemline	Ball Float Valve	C1-1
Chemline	Electric Actuator	C1-2
Chemline	Needle Valve	C1-3
Chemline	Pressure Relief Valve	C1-4
Chemline	Isolated Pressure Gauge	C1-5
Chemline	Ball Valve	C1-6
Chemline	Check Valve	C1-7
Endress & Hauser	Analyzing Transmitter	E1-1
Endress & Hauser	pH / ORP Sensor	E1-2
Endress & Hauser	Memosens Cable	E1-3
Endress & Hauser	Level Transmitter	E1-4
Endress & Hauser	Dissolved Oxygen Sensor	E1-5
Endress & Hauser	Pressure Transmitter	E1-6
Endress & Hauser	Flowmeter	E1-7
EDI	Fine Bubble Diffuser	E2-1
EDI	Coarse Bubble Diffuser	E2-2
Flow +	Ball Valve	F1
Flygt	Level Switch	F2
FPZ	Regenerative Blower	F3
Georg Fischer	Line Strainer	G1-1
Georg Fischer	Ball Valve	G1-2
Goulds	Sewage Pump	G2
Hydranautics	Submerged Membranes	H1

Manufacturer	Equipment	Tab
IFM	Compressed Air Meter	I1-1
IFM	Compressed Air Meter	I1-2
IPEC	Fine Screens	I2
LVC	Gate Valve	L1
Neotech Aqua	UV Treatment System	N1
Praher	Check Valve	P1
Primary Fluid	Calibration Column	P2
Prominent	Dosing Pump	P3
Sharpe	Ball Valve	S1-1
Sharpe	3-piece Ball Valve	S1-2
Wika	Pressure Gauge	W1

10.2 - A1-1 – ABB PRESSURE TRANSMITTER

Operating Instruction IM/261Gx/Ax-EN Rev. 07

Models 261GS/GC/GG/GJ/GM/GN/GR
Models 261AS/AC/AG/AJ/AM/AN/AR
Pressure Transmitter

Measurement made easy

Power and productivity
for a better world™

Models 261GS/GC/GG/GJ/GM/GN/GR
Models 261AS/AC/AG/AJ/AM/AN/AR

Operating Instruction
IM/261Gx/Ax-EN

Rev. 07
Issue date: 09.2013

Translation of the original instruction

Manufacturer
ABB Automation Products GmbH
Process Automation
Schillerstr. 72
32425 Minden
Germany
Tel: +49 551 905-534
Fax: +49 551 905-555

Customer service center
Phone: +49 (0) 180 5 222 580
Fax: +49 (0) 621 381 931-29031
automation.service@de.abb.com

Contents

1 Safety 5
1.1 General information and notes for the reader 5
1.2 Intended use 5
1.3 Improper use 5
1.4 Target groups and qualifications 5
1.5 Warranty provisions 5
1.6 Plates and symbols 6
1.6.1 Safety / warning symbols, note symbols 6
1.7 Name plate 7
1.7.1 Compliance with Pressure Equipment Directive (97/23/EC) 8
1.8 Transport safety instructions 8
1.9 Storage conditions 8
1.10 Safety instructions for electrical installation 8
1.11 Safety instructions for operation 8
1.12 Returning devices 8
1.13 Integrated management system 9
1.14 Disposal 9
1.14.1 Information on WEEE Directive 2002/96/EC (Waste Electrical and Electronic Equipment) 9
1.14.2 RoHS Directive 2002/95/EC 9

2 Use in potentially explosive atmospheres 10
2.1 Explosion protection 10
2.2 Type-examination certificate/Declaration of conformity 10
2.3 Type of protection "intrinsic safety Ex i" 10
2.4 Use in areas with combustible dust 10
2.5 Category 3 (EPL Gc) with type of protection "nA" 10
2.6 Use of handheld terminal / PC 10

3 Function and System Design 11
3.1 Principle of operation and construction 11

4 Mounting 13
4.1 Pressure transmitter 13
4.2 Sealing and screw connections 14
4.3 Moisture 14
4.4 Measuring pipe 15

5 Electrical connections 16
5.1 Cable connection 16
5.2 Electrical connection in the cable connection area 17
5.3 Electrical connection with plug 18
5.3.1 Assembly and connection of Han 8D (8U) socket connector 19
5.4 Protective conductor/Grounding (optional) 19
5.5 Communication setup 19
5.6 Connecting cable 20

6 Commissioning 21
6.1 General remarks 21
6.2 Output signal 21
6.3 Write protection 21
6.4 Adjusting lower range value / oblique sensor 22
6.5 Installing/Removing the LCD indicator 23
6.6 Pressure sensor ventilation 24

7 Configuration, parameterization 25
7.1.1 Standard configuration 25
7.2 Configuration types 25
7.3 Configuration using pushbutton on pressure transmitter 25
7.3.1 General remarks 25
7.3.2 Configuration 25
7.4 Configuration with the LCD indicator 26
7.4.1 Menu navigation 26
7.4.2 Process display 27
7.4.3 Switching to the configuration level (parameterization) 27
7.4.4 Menu structure 28
7.4.5 Parameter descriptions 29
7.5 Configuration with the PC/laptop or handheld terminal 32
7.6 Configuration with the graphical user interface (DTM) 33
7.6.1 System requirements 33
7.7 Parameter descriptions 33

8 Ex relevant specifications 35
8.1 Hazardous atmospheres 35
8.1.1 ATEX transmitter with type of protection "intrinsic safety Ex ia/ib" in accordance with Directive 94/9/EC 35
8.1.2 IECEx transmitter with the following types of protection: "intrinsic safety ia", "non sparking nA" and "dust ignition protection by enclosure tb" 35
8.1.3 Factory Mutual (FM) 36
8.1.4 Canadian Standards Association (CSA) 36
8.1.5 NEPSI (China) 36

9 Technical Data 37
9.1 Functional specifications 37
9.1.1 Measuring range limits and span limits 37
9.1.2 Span limits 37
9.1.3 Zero suppression and elevation 37
9.1.4 Damping 37
9.1.5 Warm-up time 37
9.1.6 Insulation resistance 37
9.2 Operating limits 38
9.2.1 Pressure limits 38
9.2.2 Temperature limits °C (°F) 38
9.2.3 Limits for environmental effects 38
9.3 Measuring accuracy 39
9.3.1 Reference conditions according to IEC 60770 ... 39
9.3.2 Dynamic response (according to IEC 61298-1) .. 39
9.3.3 Measuring error for setting cut-off point 39
9.3.4 Ambient temperature 39
9.3.5 Temperature coefficient (T_K) 39

9.3.6 Power supply ... 39
9.3.7 Load ... 39
9.3.8 Electromagnetic fields ... 40
9.3.9 Mounting position ... 40
9.3.10 Long-term stability ... 40
9.3.11 Vibration effect ... 40
9.3.12 Total performance ... 40
9.4 Technical specification ... 41
9.4.1 Materials ... 41
9.4.2 Calibration ... 41
9.4.3 Optional extras ... 41
9.4.4 Process connections ... 41
9.4.5 Electrical connections ... 42
9.4.6 Weight ... 42
9.4.7 Packaging ... 42
9.5 Mounting dimensions ... 43
9.5.1 Standard version ... 43
9.5.2 Version with the options “LCD indicator” and “Harting Han plug” ... 44
9.5.3 Transmitter with flush diaphragm ... 45
9.5.4 Version with ball valve connection ... 46
9.5.5 Mounting with angle bracket (optional) ... 47

10 Maintenance / Repair ... 48
10.1 Removal ... 48

11 Appendix ... 49
11.1 Approvals and certifications ... 49

1 Safety

1.1 General information and notes for the reader

You must read these instructions carefully prior to installing and commissioning the device.
These instructions are an important part of the product and must be kept for future reference.
These instructions are intended as an overview and do not contain detailed information on all designs for this product or every possible aspect of installation, operation and maintenance.
For additional information or if specific problems occur that are not discussed in these instructions, contact the manufacturer.
The content of these instructions is neither part of any previous or existing agreement, promise or legal relationship nor is it intended to change the same.
This product is built based on state-of-the-art technology and is operationally safe. It has been tested and left the factory in perfect working order from a safety perspective. The information in the manual must be observed and followed in order to maintain this state throughout the period of operation.
Modifications and repairs to the product may only be performed if expressly permitted by these instructions.
Only by observing all of the safety instructions and all safety / warning symbols in these instructions can optimum protection of both personnel and the environment, as well as safe and fault-free operation of the device, be ensured.
Information and symbols directly on the product must be observed. They may not be removed and must be fully legible at all times.

1.2 Intended use

261A pressure transmitters measure absolute pressure and 261G pressure transmitters gauge pressure or the level of gases, vapors and liquids.
For information on measuring ranges and permissible overload, refer to the section "Specifications".

Using these products as intended involves observing the following points:
— Read and follow the instructions in this manual.
— Observe the technical limit values (refer to the section "Specifications").
— Use only approved liquids for measurement (refer to the section “Permissible measuring agents”).

1.3 Improper use

The following are considered to be instances of improper use of the device:
— As a climbing aid, e.g., for mounting purposes.
— As a support for external loads, e.g., as a support for piping, etc.
— Adding material, e.g., by painting over the name plate or welding/soldering on parts.
— Removing material, e.g., by spot drilling the housing.

1.4 Target groups and qualifications

Installation, commissioning and maintenance of the product may only be performed by trained specialist personnel who have been authorized by the plant operator to do so. The specialist personnel must have read and understood the manual and comply with its instructions.
The operators must strictly observe the applicable national regulations with regards to installation, function tests, repairs, and maintenance of electrical products.

1.5 Warranty provisions

Using the device in a manner that does not fall within the scope of its intended use, disregarding this manual, using underqualified personnel, or making unauthorized alterations releases the manufacturer from liability for any resulting damage. This renders the manufacturer's warranty null and void.

1.6 Plates and symbols

1.6.1 Safety / warning symbols, note symbols

DANGER – Serious damage to health / risk to life!
This symbol in conjunction with the signal word “Danger“ indicates an imminent danger. Failure to observe this safety information will result in death or severe injury.

DANGER – Serious damage to health / risk to life!
This symbol in conjunction with the signal word “Danger” indicates an imminent electrical hazard. Failure to observe this safety information will result in death or severe injury.

WARNING – Body injury!
This symbol in conjunction with the signal word “Warning” indicates a possibly dangerous situation. Failure to observe this safety information may result in death or severe injury.

WARNING – Body injury!
This symbol in conjunction with the signal word “Warning” indicates a potential electrical hazard. Failure to observe this safety information may result in death or severe injury.

CAUTION – Minor injury!
This symbol in conjunction with the signal word “Caution“ indicates a possibly dangerous situation. Failure to observe this safety information may result in minor or moderate injury. This may also be used for property damage warnings.

ATTENTION – Property damage!
The symbol indicates a potentially damaging situation.
Failure to observe this safety information may result in damage to or destruction of the product and / or other system components.

IMPORTANT (NOTE)
This symbol indicates operator tips, particularly useful information, or important information about the product or its further uses. It does not indicate a dangerous or damaging situation.

1.7 Name plate

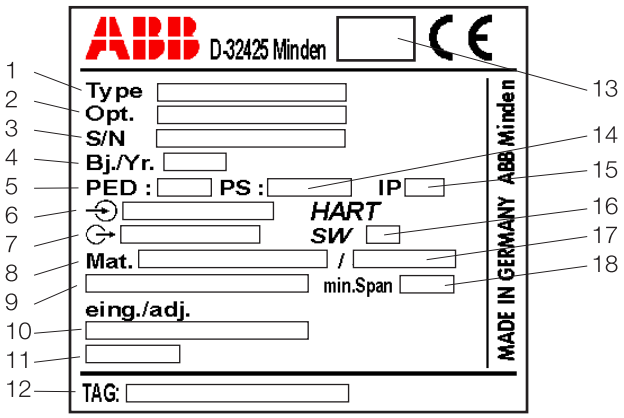

Fig. 1: Name plate for pressure transmitter model 261xx
1 Device type / Order code | 2 Options – additional information on the order code | 3 Device serial number (factory no.) | 4 Year of manufacture | 5 Identification code with reference to the Pressure Equipment Directive (SEP or 1 G) | 6 Power supply | 7 Output signal | 8 Materials that come into contact with the medium | 9 Measuring range lower limit to measuring range upper limit (LRL to URL) | 10 Measuring range, set to ... | 11 HART output (process variable) | 12 Measuring point tag (max. 32 characters) | 13 "SIL2" identification code (optional) | 14 Permissible pressure | 15 Degree of protection | 16 Software version | 17 Filling fluid, if present | 18 Minimum measuring span

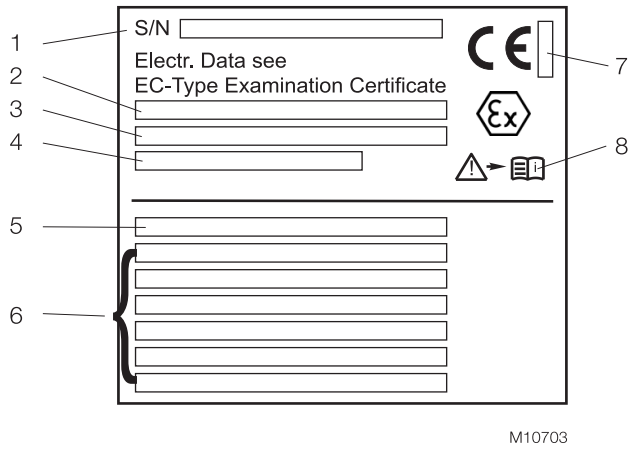

Fig. 2: Additional name plate for devices intended for use in explosion risk areas or for devices with direct mount or remote seals (optional)
1 Serial number (factory no.) | 2 Type of protection | 3 Type of protection (continued) | 4 Number of the EC-type-examination certificate | 5 Order code for direct mount seal | 6 Type of seal, nominal diameter, max. pressure, temperature limits, sealing surface, material, filling fluid | 7 Identification number of the notified body according to ATEX (optional) | 8 Symbol: "Notice". Observe the specifications in the operating instructions and type-examination certificate.

IMPORTANT (NOTE)
For information on the individual letters/numbers that make up the order code, please refer to the order confirmation or associated data sheet.
For information about labeling in accordance with the Pressure Equipment Directive, please observe the information in "Compliance with Pressure Equipment Directive".

1.7.1 Compliance with Pressure Equipment Directive (97/23/EC)

Devices with PS > 200 bar (20 MPa)

Devices with a permissible pressure of PS > 200 bar (20 MPa) have been tested for conformity by the Technical Supervisory Association TÜV NORD (0045) in accordance with module H and can be used for fluids of group 1 (PED: 1G).
The name plate bears the following identification codes:

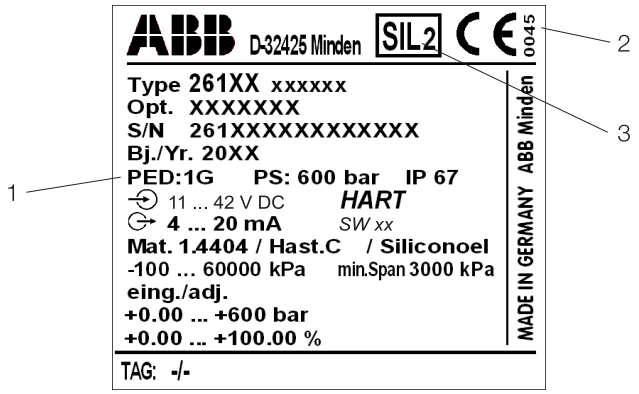

M10704

Fig. 3: Identification codes according to Pressure Equipment Directive (example)
1 PED: 1G | 2 Identification number of the notified body according to the Pressure Equipment Directive | 3 "SIL 2" identification code (optional)

Devices with PS ≤ 200 bar (20 MPa)

Devices with a permissible pressure PS ≤ 200 bar (20 MPa) conform to sec. 3 para. (3) and have not been tested for conformity. The devices have been constructed and manufactured according to sound engineering practice (SEP). The CE marking on the device does not refer to the Pressure Equipment Directive.
The name plate then contains the following identification codes: PED: SEP.

1.8 Transport safety instructions

Observe the following instructions:

— Do not expose the device to moisture during transport. Pack the device accordingly.
— Pack the device so that it is protected against vibrations during transport, e.g., by using air-cushioned packaging.

Prior to installation, check the devices for possible damage that may have occurred as a result of improper transport. Details of any damage that has occurred in transit must be recorded on the transport documents. All claims for damages must be submitted to the shipper without delay and before installation.

1.9 Storage conditions

— The device must be stored in dry and dust-free conditions. Always keep the device in its original package during storage / transport.
— Observe the permissible ambient conditions for transport and storage according to the section "Specifications".
— In principle, the devices may be stored for an unlimited period. However, the warranty conditions stipulated in the order confirmation of the supplier apply.

1.10 Safety instructions for electrical installation

The electrical connection may only be established by authorized specialist personnel and in accordance with the connection diagrams.
The electrical connection information in the manual must be observed; otherwise, the type of electrical protection may be adversely affected.
Ground the measurement system according to requirements.

1.11 Safety instructions for operation

Before switching on the device, make sure that your installation complies with the environmental conditions listed in the chapter "Specifications" or on the data sheet.
If there is a chance that safe operation is no longer possible, take the device out of operation and secure it against unintended startup.

1.12 Returning devices

Use the original packaging or a secure transport container of an appropriate type if you need to return the device for repair or recalibration purposes. Fill out the return form (see the Appendix) and include this with the device.
According to the EU Directive governing hazardous materials, the owner of hazardous waste is responsible for its disposal or must observe the following regulations for shipping purposes: All devices delivered to ABB Automation Products GmbH must be free from any hazardous materials (acids, alkalis, solvents, etc.).

Please contact Customer Center Service acc. to page 2 for nearest service location.

1.13 Integrated management system

ABB Automation Products GmbH operates an integrated management system, consisting of:

— Quality management system to ISO 9001:2008
— Environmental management system to ISO 14001:2004
— Occupational health and safety management system to BS OHSAS 18001:2007 and
— Data and information protection management system

Environmental awareness is an important part of our company policy.
Our products and solutions are intended to have minimum impact on the environment and on people during manufacturing, storage, transport, use, and disposal.
This includes the environmentally-friendly use of natural resources. We conduct an open dialog with the public through our publications.

1.14 Disposal

This product is manufactured from materials that can be recycled by specialist recycling companies.

1.14.1 Information on WEEE Directive 2002/96/EC (Waste Electrical and Electronic Equipment)

This product is not subject to WEEE Directive 2002/96/EC or relevant national laws (e.g., ElektroG in Germany).
The product must be disposed of at a specialist recycling facility. Do not use municipal garbage collection points.
According to the WEEE Directive 2002/96/EC, only products used in private applications may be disposed of at municipal garbage collection points. Proper disposal prevents negative effects on people and the environment, and supports the reuse of valuable raw materials.
If it is not possible to dispose of old equipment properly, ABB Service can accept and dispose of returns for a fee.

1.14.2 RoHS Directive 2002/95/EC

With the Electrical and Electronic Equipment Act (ElektroG) in Germany, the European Directives 2002/96/EC (WEEE) and 2002/95/EC (RoHS) are translated into national law. ElektroG defines the products that are subject to regulated collection and disposal or reuse in the event of disposal or at the end of their service life. ElektroG also prohibits the marketing of electrical and electronic equipment that contains certain amounts of lead, cadmium, mercury, hexavalent chromium, polybrominated biphenyls (PBB), and polybrominated diphenyl ethers (PBDE) (also known as hazardous substances with restricted uses).
The products provided by ABB Automation Products GmbH do not fall within the current scope of regulations on hazardous substances with restricted uses or the directive on waste electrical and electronic equipment according to ElektroG. If the necessary components are available on the market at the right time, in the future these substances will no longer be used in new product development.

2 Use in potentially explosive atmospheres

2.1 Explosion protection

The device complies with the explosion-protection requirements of Directive 94/9/EC (ATEX).
When installing explosion-proof transmitters (e.g., electrical connection, ground/PE, etc.), observe national regulations, DIN/VDE standards and explosion-protection directives.
The certified explosion-proof designation for the transmitter is provided on the name plate.

2.2 Type-examination certificate/Declaration of conformity

For explosion-proof models, the EC-type-examination certificate or declaration of conformity is included with these operating instructions.

2.3 Type of protection "intrinsic safety Ex i"

Only intrinsically safe devices may be installed in the transmitter signal circuit. The signal circuit can be interrupted while the transmitter is in operation (e.g., clamping/unclamping signal lines).
The housing may be opened during operation.
Transmitters with and without remote seals and featuring type of protection "intrinsic safety Ex i" may be directly integrated into the partition separating Zone 0 and Zone 1 (sensor diaphragm in Zone 0, transmitter in Zone1), provided that the power is supplied via an intrinsically safe circuit with type of protection "Ex ia".

2.4 Use in areas with combustible dust

Installation must be performed in accordance with EN 61241-14:2004.
Transmitters can only be connected using cable glands certified in accordance with Directive 94/9/EC (ATEX). The cable gland must conform to IP 67 degree of protection.
The smoldering temperature of the dust must be at least 75 K above the maximum surface temperature of the transmitter.
The maximum surface temperature is 95 °C (203 °F) and is obtained by adding together the maximum ambient temperature (85 °C (185 °F)) and the maximum self-heating (10 K).

WARNING! Risk of explosion!
When using remote seals with an anti-stick coating, be aware of the risk of electrostatic discharge (with consideration given to the filling material and transport speed).

2.5 Category 3 (EPL Gc) with type of protection "nA"

The transmitter must be connected using a certified cable gland (not included in scope of delivery). The cable gland must satisfy the requirements of type of protection "increased safety Ex e" in accordance with Directive 94/9/EC (ATEX). Additionally, the conditions stipulated in the type-examination certificate for the cable gland must be observed.

WARNING! Risk of explosion!
Opening the housing during operation (with the supply voltage switched on) is not permitted.
Opening the cover presents a risk of spark formation and, therefore, explosion.
Only open the housing when the supply voltage is switched off.

2.6 Use of handheld terminal / PC

If a handheld terminal or a PC is being used for communication / configuration / parameterization in a potentially explosive atmosphere with type of protection "intrinsic safety", the devices used must be certified accordingly.
This applies even if the device is only connected for a short period of time. This proof of "intrinsic safety" must be supplied in addition to the transmitter.

WARNING! Risk of explosion!
The handheld terminal battery must not be replaced in a potentially explosive atmosphere.
Replacing the battery presents a risk of spark formation and, therefore, explosion.
The battery may only be replaced outside of the potentially explosive atmosphere.

3 Function and System Design

Digital pressure transmitters are communication-ready field devices with microprocessor-controlled electronics.
For bidirectional communication, an FSK signal is superimposed on the 4 … 20 mA output signal via the HART protocol.
The graphic user interface (DTM) can be used to configure, poll, and test the pressure transmitter on a PC. Handheld terminals also support communication.
For “local” operation, a button is available on the system electronics for setting the lower and upper range values. In combination with an optionally installed LCD indicator, a complete external configuration and parameter setting of the transmitter can be performed via the four local pushbutton controls.
The sturdy electronics housing is made of stainless steel and is resistant to aggressive atmospheres. The process connection is also made of stainless steel or Hastelloy C.
The name plate contains information about the specific pressure transmitter version (see section "Safety / Name plates").

IMPORTANT (NOTE)
For explosion-proof transmitters, the explosion protection type and, in case of attached pressure sensors, the corresponding pressure sensor type is specified on a separate plate.

In addition, a tag indicating the measuring points may be attached (as an option).

3.1 Principle of operation and construction

The transmitter has a compact design and comprises the pressure measuring cell and electronic unit with pushbutton control. Depending on the measuring range and measured variable, either a ceramic pressure sensor or a silicon pressure sensor is used.

Ceramic pressure sensor
In case of ceramic pressure sensors, the applied process pressure (pe/pabs) is transferred directly to the measuring diaphragm. Even a very slight deflection of the measuring diaphragm will change the internal output voltage of the pick-up system.

Silicon pressure sensor
In case of silicon pressure sensors, the pressure is transferred via the separation diaphragm and the filling fluid to the measuring diaphragm. The resistance values of the four piezo resistors doped in the measuring diaphragm will change.

This pressure-proportional, internal output voltage is converted via the electronic unit into a scaled electrical signal. Depending on the model, the transmitter is connected to the process by means of a spigot G ½ B (DIN EN 837-1), ½-14 NPT male or female thread, flush diaphragm with special thread G ½" for, e.g., ball valve connection or different pressure sensors.
The pressure transmitter operates on the basis of two-wire technology. The same wires are used for the operating voltage (device-specific, see “Specifications”) and the scaled output signal. The electrical connection is established via a cable entry or plug.

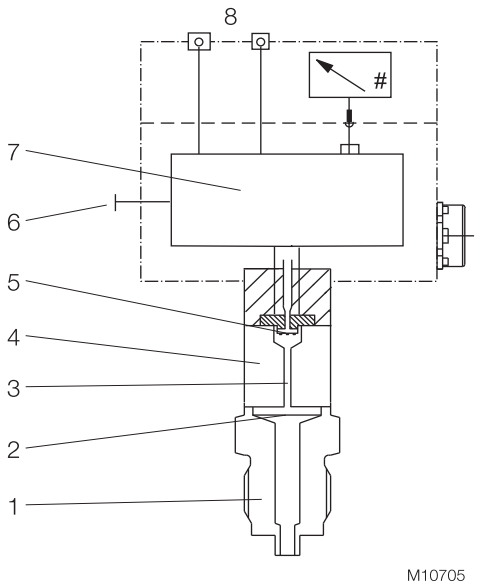

Fig. 4: 261G transmitter for gauge pressure and fill level (example)
1 Process connection | 2 Separation diaphragm | 3 Filling fluid | 4 Measuring cell | 5 Pressure sensor | 6 Pushbutton for lower / upper range values | 7 Microprocessor-controlled electronics | 8 Output / Supply power

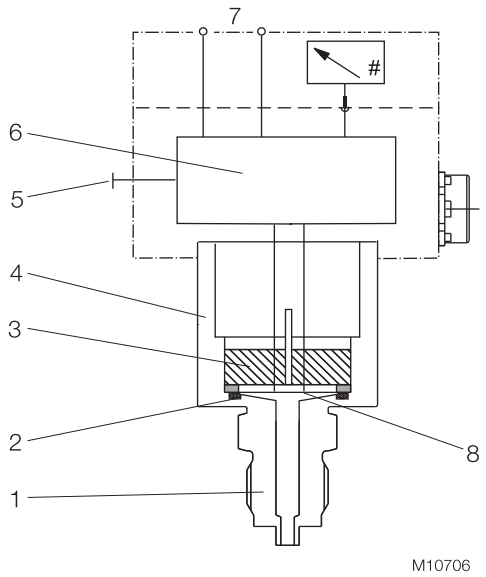

Fig. 5: 261A transmitter for absolute pressure (example)
1 Process connection | 2 O-ring | 3 Measuring capsule | 4 Measuring equipment | 5 Pushbutton for lower / upper range values | 6 Microprocessor-controlled electronics | 7 Output / Supply power | 8 Measuring diaphragm

To measure the output signal and to configure or calibrate the pressure transmitter, an ammeter must be connected directly to the output circuit.
The lower and upper range values can be set via a pushbutton on the electronic unit.
An optional fastener is available for attaching a stainless steel tag so that the measuring points can be indicated.
The transmitter may also be equipped with an LCD indicator that can be read from above (optional, can be retrofitted). With the aid of this LCD indicator, the most important transmitter functions or data can be fully configured using the “local” control unit (four pushbuttons on the indicator) (see “Configuration”).

4 Mounting

Before installing the transmitter, check whether the device design meets the requirements of the measuring point from a measurement technology and safety point of view. This applies in respect of the:
— Measuring range
— Gauge pressure stability
— Temperature
— Explosion protection
— Operating voltage

The suitability of the materials must be checked as regards their resistance to the media. This applies in respect of the:
— Seal
— Process connection, separation diaphragm, etc.

In addition, the relevant directives, regulations, standards, and accident prevention regulations must be observed (e.g., VDE / VDI 3512, DIN 19210, VBG, Elex V, etc.).
Measurement accuracy is largely dependent on correct installation of the pressure transmitter and, if applicable, the associated measuring pipe(s).
As far as possible, the measuring setup should be free from critical ambient conditions such as large variations in temperature, vibrations, or shocks.

IMPORTANT (NOTE)
If unfavorable ambient conditions cannot be avoided for reasons relating to building structure, measurement technology, or other issues, the measurement quality may be affected.
(See “Specifications”).

If a remote seal with capillary tube is installed on the transmitter, the additional operating instructions for remote seals and the related data sheets must be observed.

4.1 Pressure transmitter

The pressure transmitter can be connected directly to the shut-off valve. An angle bracket for wall or pipe mounting (2" pipe) is also available as an accessory.
The pressure transmitter should be installed so that the display and control unit are accessible during installation and connection, as well as retrofitting.
Ideally, the pressure transmitter should be mounted in a vertical position with the process connection pointing downward to prevent subsequent zero position shifts.

IMPORTANT (NOTE)
If the pressure transmitter is installed at an angle, depending on the measuring range the filling fluid exerts hydrostatic pressure on the measuring diaphragm, resulting in a zero position shift.
The zero point must then be adjusted.

However, in principle the pressure transmitter can be used in any mounting position. It is mounted by following the same guidelines as for a manometer.
For mounting options with an angle bracket, see the section "Specifications".

4.2 Sealing and screw connections

Connecting G ½ B spigot:
For sealing, a flat gasket must be used in accordance with DIN EN 837-1.

NPT threaded connection:
Seal the threads with PTFE or another approved resistant sealant.

Process connection with flush diaphragm:
Prior to mounting the device, install a welded connection or tapped hole according to relevant soldering standards (for process connection and welded connection dimensions, see “Specifications”).

Process connection for ball valve:
An appropriate ball valve connection or weld-in sleeve is required for mounting purposes. In this case, the seal is formed by a cone at the outer end of the process connection (metal/metal). For information on the weld-in sleeve, see “Specifications”.

4.3 Moisture

Use suitable cables and tighten cable glands securely. The transmitter can also be protected against the ingress of moisture by routing the connecting cable downward before securing it. This allows rain and condensation to drip down. This is especially important for installation in outdoor areas and rooms that are exposed to moisture (e.g., due to cleaning processes) or on cooled or heated tanks.

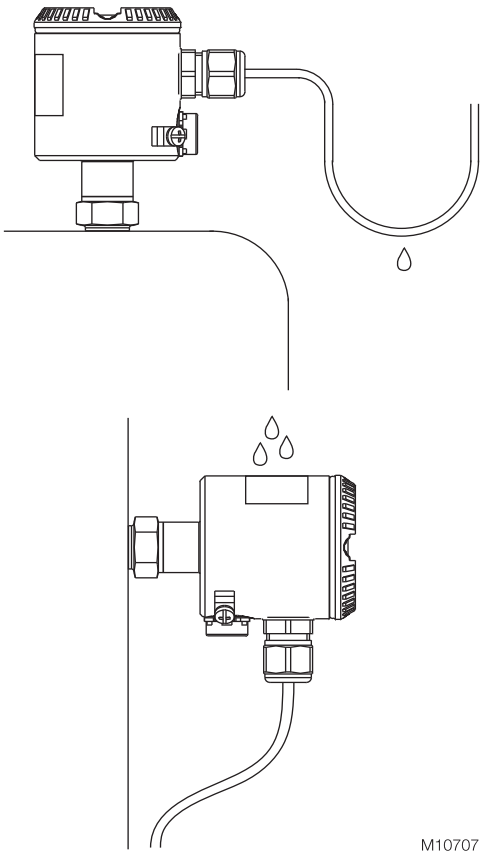

Fig. 6: Steps for preventing the ingress of moisture

4.4 Measuring pipe

In order for the pipes to be laid correctly, the following points must be observed:

— Keep the measuring pipe as short as possible and avoid sharp bends.
— Lay the measuring pipe in such a way that no deposits can accumulate in it. Gradients should not be less than approx. 8 % (ascending or descending).
— The measuring pipe should be blown through with compressed air or, better yet, flushed through with the measuring medium before connection.
— Completely depressurize the measuring pipe if the medium is a fluid.
— Lay the measuring pipe in such a way that gas bubbles (when measuring fluids) or condensate (when measuring gases) can flow back into the process line.
— When measuring steam, lay the measuring pipe in such a way that hot steam cannot flow back into the process connection (water trap, e.g., a water trap pipe that is filled with water before installation).
— Check the tightness of the connection.

5 Electrical connections

WARNING – Electrical dangers!
Observe the applicable regulations governing electrical installation. Connections must only be established in a dead-voltage state. The transmitter has no switch-off elements. Therefore, overcurrent protective devices, lightning protection, or voltage disconnection options must be provided at the plant.
Check that the existing operating voltage corresponds to the voltage indicated on the name plate.
The same lines are used for both the power supply and output signal.

5.1 Cable connection

Depending on the model supplied, the electrical connection is established via cable gland M16x1.5 (for diameters of 5 to 10 mm) or M20x1.5 (for diameters of 6 to 11 mm), a threaded bore for cable gland 1/2-14 NPT, or via the Han 8U plug, i.e., via the miniature plug connector M12 x 1 (see also "Technical specification / Electrical connections").
The screw terminals are suitable for wiring cross-sections up to 1.5 mm^2.
It is recommended that you strip approx. 30 … 35 mm (1.18 … 1.38 inch) off the cable jacket.

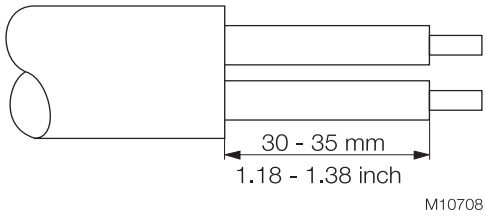

Fig. 7: Stripped connecting cable

IMPORTANT (NOTE)
After a period of several weeks, removing the screws in the housing cover requires increased force. This is not caused by the threads, but instead is due solely to the type of seal.

5.2 Electrical connection in the cable connection area

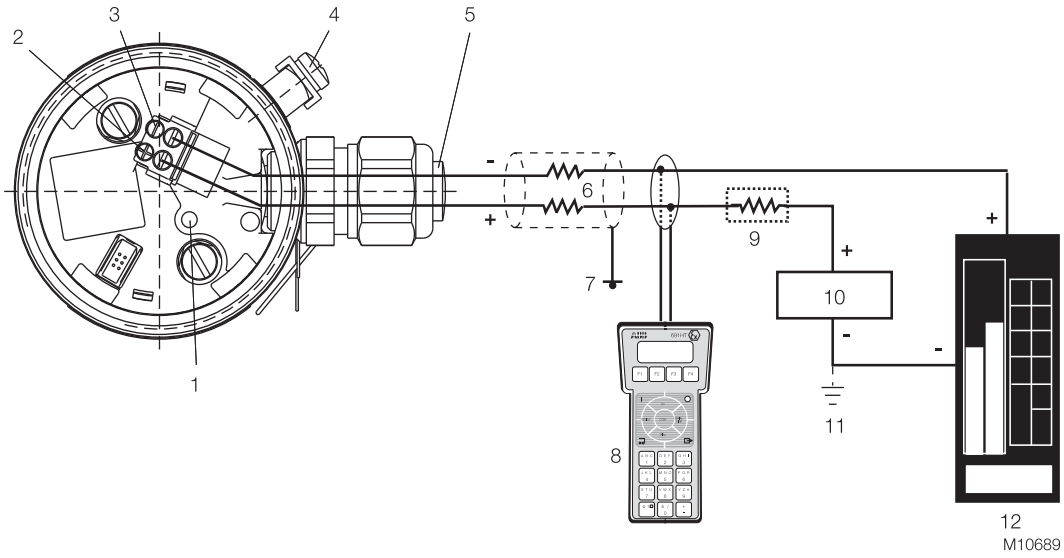

Fig. 8
1 Pushbutton for lower/upper range values | 2 + Signal screw terminals for leads with cross-section of 0.5 ... 1.5 mm² | 3 - Signal screw terminals for leads with a cross-section of 0.5 ... 1.5 mm² | 4 Grounding / equipotential bonding terminal (optional) | 5 Cable entry | 6 Line load | 7 Grounding | 8 Handheld terminal | 9 Resistor (min. 250 Ω) | 10 Power supply / power supply unit | 11 Optional ground | 12 Receiver

application	Permissible voltage range of power supply
Transmitter operated outside the potentially explosive atmosphere.	11 ... 42 V
Transmitter operated inside the potentially explosive atmosphere.	11 ... max. 30 V (intrinsically safe)

WARNING! Risk of explosion!
If, when using transmitters with type of protection "intrinsic safety", an ammeter is connected to the output circuit or a modem is connected in parallel while there is a risk of explosion, the sums of the capacitances and inductances of all circuits, including the transmitter (see EC-type-examination certificate) must be equal to or less than the permissible capacitances and inductances of the intrinsically safe signal circuit (see EC-type-examination certificate for the power supply unit).
Only passive or explosion-proof devices or indicators may be connected.

5.3 Electrical connection with plug

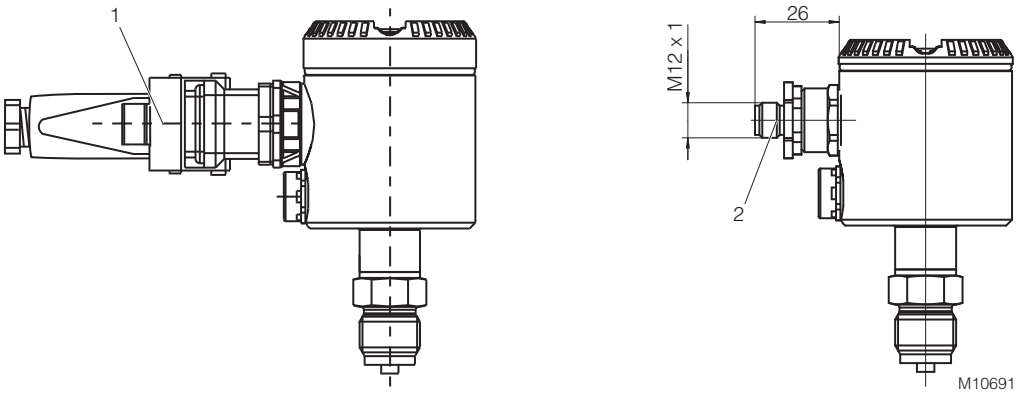

Fig. 9: Connection via plug connection
1 Harting Han 8D (8U) plug connection | 2 M12 x 1 miniature plug connector

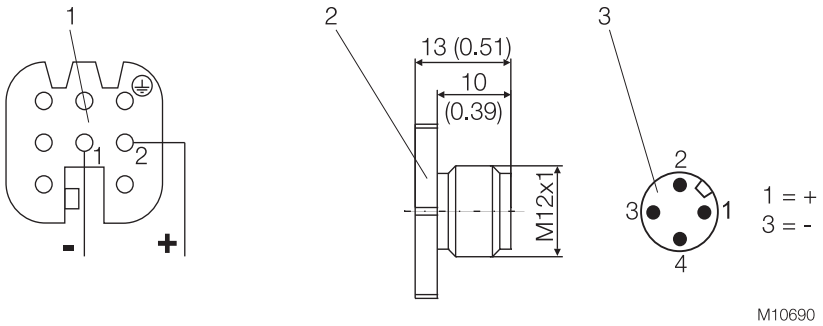

Fig. 10: Pin assignment
1 Harting Han 8D (8U) socket insert for mating plug supplied (view of sockets) |
2 Mating plug (socket); not supplied | 3 M12 x 1 miniature plug (pins)

5.3.1 Assembly and connection of Han 8D (8U) socket connector

The socket connector for connecting the cable is supplied unassembled as an accessory for the transmitter.

IMPORTANT (NOTE)
Please observe the specifications for the electrical connection that have been supplied with the connector.

Assembly is depicted in the figure below.

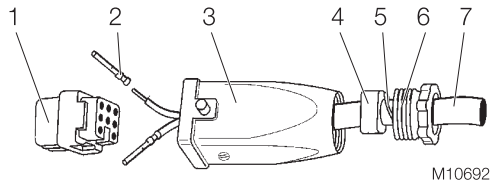

Fig. 11: Assembling the socket connector
1 Socket | 2 Contact | 3 Socket shell | 4 Gasket (can be cut) | 5 Thrust collar | 6 PG 11 pressure screw | 7 Cable (diameter 5 ... 11 mm (0.20 ... 0.43 inch))

1. The contacts are crimped or soldered onto the cable ends (wire cross-section of 0.75 … 1 mm^2 (AWG 18 … AWG 17)), from which approx. 1.5 … 2 cm (0.59 … 0.79 inch) of the sleeve and approx. 8 mm (0.32 inch) of the insulation have been stripped; they are then inserted into the socket from the rear.
2. Slide the pressure screw, thrust collar, gasket, and socket shell onto the cable in the order indicated before assembly (you may have to adjust the gasket to fit the cable diameter).

5.4 Protective conductor/Grounding (optional)

A terminal is available on the outside of the housing for grounding (PE) the transmitter.

5.5 Communication setup

The transmitter can be operated via a modem, using a PC or laptop. The modem can be connected to the transmitter in parallel at any point in the signal circuit. Communication between transmitter and modem occurs via AC signals that are superimposed on the analog 4 ... 20 mA output signal. This modulation occurs without averaging and does not, therefore, affect the measuring signal.
Communication between transmitter and PC or laptop is only possible if the signal circuit is set up as shown in the following figure, “Communication mode: Point-to-point”. The resistance between the connecting point for the FSK modem and the power supply must be at least 250 Ω (including internal resistance of the power supply unit). If this value is not achieved within the context of normal installation, an additional resistor must be used.
The ABB Contrans I supply modules with HART communication already have a factory-installed, additional resistor. Some of these modules offer the option of communicating directly over the supply module in the operating mode "FSK bus".
Power can be supplied by power supply units, batteries, or power supplies; these must be designed to ensure that the operating voltage UB of the transmitter always remains between DC 11 V and 42 V (30 V for "Ex i").
In addition, the maximum current of 20 … 23.6 mA resulting from overranging must be considered, depending on the corresponding parameterization. This yields the minimum value for US.
If additional signal receivers (e.g., indicators) are looped into the signal circuit, their resistance must also be considered.

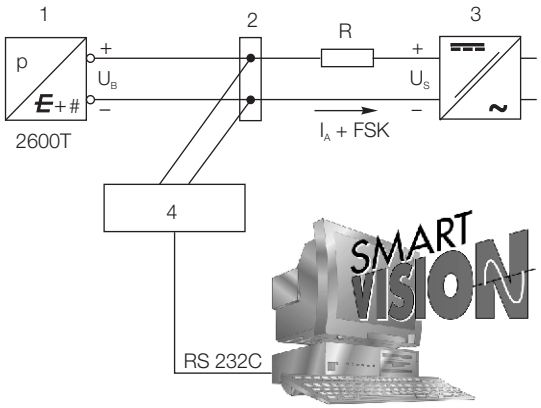

M10693

Fig. 12: "Point-to-point" communication mode
1 Pressure transmitter | 2 Possible connecting points for a modem between A and B | 3 Power supply unit | 4 FSK modem

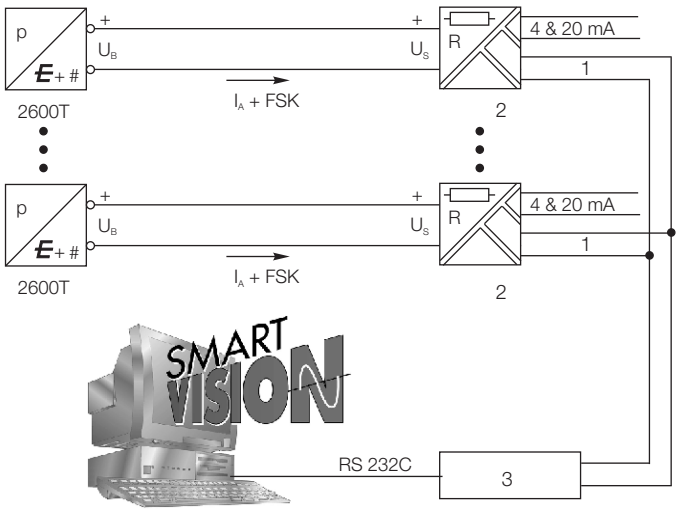

M10694

Fig. 13: "FSK bus" communication mode
1 FSK bus | 2 Supply module with HART isolation | 3 FSK modem

5.6 Connecting cable

Communication between the transmitter and PC or laptop is only possible if the cabling meets the following requirements:
The minimum wire diameter depends on the line length.
Line lengths up to 1,500 m: 0.51 mm
Line lengths above 1,500 m: 0.81 mm

The maximum line length is limited.
Dual-core cable: 3,000 m
Multi-core cable: 1,500 m

The actual possible line length of the electrical circuit depends on the total capacitance and total line resistance, and can be estimated using the following formula:

$$L = \frac{65 \times 10^{6}}{RxC} - \frac{C_f + 1000}{C}$$

L = Line length in m
R = Total line resistance in Ω (ohms)
C = Line capacitance in pF/m
C_f = Capacitance of the devices located in the circuit in pF
Avoid routing cables with other electrical cables (with inductive load, etc.) or near large electrical equipment.

6 Commissioning

6.1 General remarks

Once the pressure transmitter has been installed, it is put into operation by switching on the operating voltage.
Check the following before switching on the operating voltage:

— Process connections
— Electrical connection
— The measuring pipe and measuring chamber of the measuring equipment must be completely filled with the measuring medium.

The transmitter can then be put into operation.
To do this, the shut-off valves must be actuated in the following order (in the default setting, all valves are closed):

1. Open the discharge shut-off valve, if present.
2. Open the shut-off valve.

To put the transmitter out of operation, carry out the steps in reverse order.

IMPORTANT (NOTE)
In the case of pressure transmitters for absolute pressure that feature a ceramic pressure sensor and measuring ranges of ≤ 40 kPa absolute, please be aware that the pressure measuring cell will have been overloaded by the atmospheric pressure due to the long periods of transport and storage involved. For this reason, you will need to allow a starting time of approx. 3 hours after commissioning, until the sensor has stabilized to such an extent that the specified accuracy can be maintained.

If, when using transmitters with type of protection "intrinsic safety", an ammeter is connected to the output circuit or a modem is connected in parallel while there is a risk of explosion, the sums of the capacitances and inductances of all circuits, including the transmitter (see EC-type-examination certificate) must be equal to or less than the permissible capacitances and inductances of the intrinsically safe signal circuit (see EC-type-examination certificate for the power supply unit).
Only passive or explosion-proof devices or indicators may be connected.

If the output signal stabilizes only slowly, it is likely that a large damping time constant has been set on the transmitter.

6.2 Output signal

If the applied pressure is within the values indicated on the name plate, the output current ranges between 4 und 20 mA. If the pressure applied falls outside the set range, the output current will be between 3.5 mA and 4 mA if the range is undershot or between 20 mA and 23.6 mA if the range is overshot (depending on the respective configuration).

Standard setting for normal operation
3.8 mA / 20.5 mA

A current that is < 4 mA or > 20 mA may also indicate that the microprocessor has detected an internal error.

Standard setting for error detection
21 mA

The graphical user interface (DTM) can be used to diagnose the error.

IMPORTANT (NOTE)
A brief interruption in the power supply results in initialization of the electronics (program restarts).

6.3 Write protection

Write protection prevents the configuration data from being overwritten by unauthorized users. If write protection is enabled, the "Lower Range Value / Upper Range Value" pushbutton will be disabled.
It is still possible to read out the configuration data via optional LCD indicator, handheld terminal or the graphical user interface (DTM).
Write protection can be disabled via the graphical user interface (DTM), a HART handheld terminal, or an optional LCD indicator (see “Write protection” under “Configuration”).

6.4 Adjusting lower range value / oblique sensor

During installation of the transmitter, zero position shifts may occur due to the mounting position; these must be corrected. Possible causes include:

— Transmitter mounting position is different from recommended vertical mounting position
— Fluids in differential pressure lines or remote seal capillary tubes can generate additional hydrostatic pressure

IMPORTANT (NOTE)
The transmitter must have reached its operating temperature (approx. 5 min. after startup, if the transmitter has already reached the ambient temperature) in order to perform the zero shift correction.

There are two options (variant A or B) for correcting the 4 … 20 mA output signal directly on the transmitter.

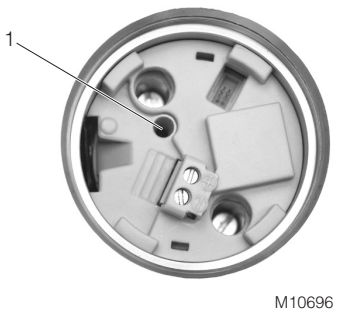

Fig. 14:
1 Pushbutton (in hole)

Variant A, with pushbutton in device.

1. Make sure that the measured variable corresponds to the start value for the measurement process, i.e., that the pressure that the process exerts on the transmitter is the level of pressure required to generate a 4 mA output signal. The pressure must be stable (observe set damping level).
2. Unscrew the housing cover and press the pushbutton in the bore hole on the electronic unit (see the following figure) using a pin with diameter of ≤ 2.5 mm. Hold the pushbutton down for a maximum of 1 s. The output signal is set to 4 mA. The span remains unchanged.
3. Screw the housing cover back on.

IMPORTANT (NOTE)
The lower range value is stored to a failsafe memory approx. 25 s after you activate the pushbutton.

Correction procedure "A" described above does not affect the physical pressure shown; it only corrects the analog output signal. For this reason, the analog output signal may differ from the physical pressure shown on the digital display or the communication tool.
To avoid this discrepancy, you need to correct the zero position shift (zero shift) as described under variant "B".

IMPORTANT (NOTE)
The procedure described in "A" above does not affect the physical pressure shown; it only corrects the analog output signal. For this reason, the analog output signal may differ from the physical pressure shown on the digital display or the communication tool.
To avoid this discrepancy, you need to correct the zero position shift (zero shift) as described under variant "B".

Variant B, with pushbuttons on the optional LCD indicator.

1. Make sure that the process pressure corresponds to the atmospheric pressure Pe = 0 (with 261Gx) or a complete vacuum Pabs = 0 abs (with 261Ax). The pressure must be stable (observe set damping level).
2. Unscrew the housing cover and select the "Calibrate_Zero Trim" menu item on the LCD indicator.
3. The correction is made by pressing the button (for details of menu control, see "Configuration with the LCD indicator").
4. Where the transmitter mounting position differs from the nominal position, we recommend that you also compensate for the temperature-dependent effect of this mounting position. To do this, select the "Device Setup_Installation angle" menu item (software version 1.5.0 or higher). This shows the angle at which the transmitter has been installed.
5. Screw the housing cover back on.

6.5 Installing/Removing the LCD indicator

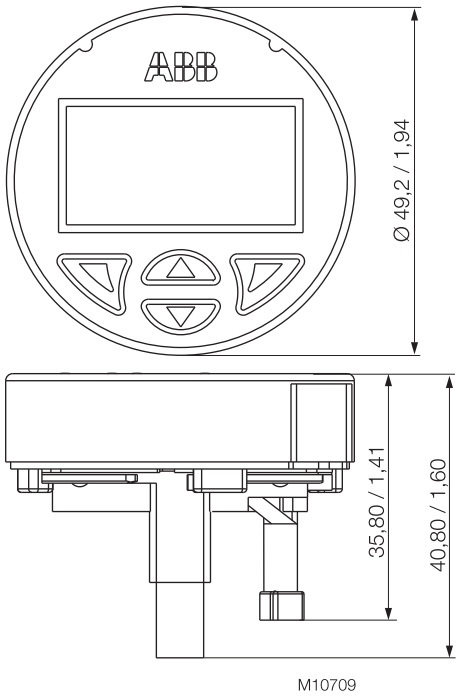

Fig. 15:

The LCD indicator is attached to the housing of the pressure transmitter. The LCD indicator can be replaced, e.g., if defective.

WARNING – Risk of burns!
The connection head can be become very hot as a result of the process. There is a danger of burns.
Switch off the LCD indicator before replacing the LCD indicator.
The transmitter atmosphere may be explosive. Risk of explosion!

1 Unscrew the housing cover for the transmitter.
2. Carefully remove the LCD indicator from the inset for the transmitter. The LCD indicator is held firmly in place, meaning that you may have to use the tip of a screwdriver to pry it loose. Take care to avoid any mechanical damage.
3. No tools are required to insert the LCD indicator. Carefully insert both guide pins for the LCD indicator in the guide holes of the transmitter inset. Make sure the black connection socket fits into the terminal on the transmitter inset. The red outer flat ribbon cable marking is on the inside facing the middle of the device. Then press it in as far as it will go. Make sure that the guide pins and connection socket are fully inserted.

IMPORTANT (NOTE)
The LCD indicator is designed with type of protection "intrinsic safety" and is covered by the transmitter's EC type-examination certificate.

Following this, the position of the LCD indicator can be adjusted to suit the installation position of the transmitter, to ensure that the display is legible.
The LCD indicator has twelve positions that can be set in 30° increments.

NOTICE – Potential damage to parts!
Make sure the flat ribbon cable does not get twisted or torn when rotating the LCD indicator.

4. The LCD indicator consists of an upper and a lower part. Both parts are connected to each other via a bayonet lock. Carefully rotate the top part of the LCD indicator approx. 45° to the left, in order to detach it from the bottom part of the indicator.
5. Carefully lift the LCD indicator into the desired position in the bottom part and rotate to the right until it snaps into place.

NOTICE – Potential damage to parts!
Take care not to pinch the flat ribbon cable when rotating the LCD indicator.

6 Screw on the housing cover for the transmitter.

6.6 Pressure sensor ventilation

Fig. 16: Ventilation unit

For technical reasons, you must apply atmospheric pressure to the reference side of the pressure sensor.
A special ventilation unit (1) is screwed into the electronic housing from the outside and is equipped with a PTFE filter on the inside. Make sure that the ventilation opening is not covered (e.g., do not paint over).

7 Configuration, parameterization

NOTICE – Potential damage to device as a result of electrostatic charging!
When the housing is open, EMC protection is impaired and there is no longer any protection against accidental contact.
Do not touch conductive parts of the device.

7.1.1 Standard configuration

Transmitters are set to the customer's specified span at the factory. The set range and measuring point number are provided on the name plate. If this data has not been specified, the transmitter will be delivered with the following configuration:

Parameter	Factory setting
4 mA	Zero position
20 mA	Measuring range upper limit (URL)
Output	Linear
Damping	0.1 s
Transmitter failure mode	21 mA
Optional LCD display	0 … 100 %

Any or all of the configurable parameters listed above - including the upper and lower range values - can easily be changed using the optional LCD indicator, a HART handheld communicator, or a PC running the configuration software SMART VISION with DTM for 2600T.

7.2 Configuration types

Pressure transmitters can be configured as follows:
— Configuration using pushbutton on pressure transmitter.
— Configuration with the LCD indicator.
— Configuration with the PC / laptop or handheld terminal.
— Configuration via graphical user interface (DTM).

7.3 Configuration using pushbutton on pressure transmitter

7.3.1 General remarks

The pushbutton is located on the electronics unit (without mounted LCD indicator).
The pushbutton is used to set the "Lower Range Value" (0 %) and "Upper Range Value" (100 %) parameters.
To access the pushbutton, you must remove the housing cover for the electronics unit.
The pushbutton (1) is located in the bore hole and can be pressed with a pin or screwdriver with a diameter of ≤ 2.5 mm.

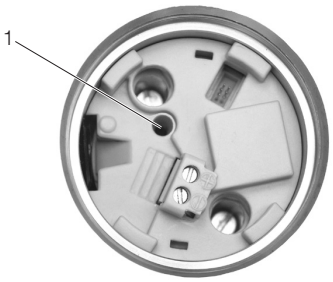

Fig. 17: Pushbutton position

7.3.2 Configuration

The "Lower Range Value" and "Upper Range Value" parameters can be set directly on the transmitter using a button. The transmitter has been set by the manufacturer based on the order information.
The name plate contains information on the "Lower Range Value" and "Upper Range Value" that have been set.

In general, the following applies:
For a setting, e.g., of 0 … 40 kPa, the first pressure value (0 kPa) is always assigned to the 4 mA signal and the second pressure value (40 kPa) is always assigned to the 20 mA signal.
To reset the transmitter, apply the pressure for the "Lower Range Value" and "Upper Range Value" to the measuring equipment. Make sure that the measuring limits are not exceeded.
Reducing stations can be used as transducers with adjustable pressure and reference displays.

IMPORTANT (NOTE)
When making the connection, please ensure that there are no residual fluids (for gaseous measured media) or air bubbles (for fluid measured media) in the connection lines, since these can lead to errors during inspection.

Any potential measuring error for the pressure generator should be at least three times smaller than the desired measuring error for the transmitter.
It is recommended that, if time constant is known, you set the damping to zero (via LCD indicator or graphical user interface).

IMPORTANT (NOTE)
In the case of 261A pressure transmitters for absolute pressure that feature measuring ranges of ≤ 40 kPa absolute, please be aware that the pressure measuring cell will have been overloaded by the atmospheric pressure due to the long periods of transport and storage involved. For this reason, you will need to allow a starting time of approx. 3 hours after commissioning, until the sensor has stabilized to such an extent that the specified accuracy can be maintained.

Adjusting the "Lower Range Value" and "Upper Range Value" parameters

1. Apply the pressure for the "Lower Range Value" and wait approx. 30 s until it has stabilized.
2. Setting for "Lower Range Value": Press the pushbutton for 1 s. The output current is set to 4 mA.
3. Apply the pressure for the "Upper Range Value" and wait approx. 30 s until it has stabilized.
4. Setting for “Upper Range Value”: Press and hold the pushbutton for approx. 5 s. The output current is set to 20 mA.
5. If required, reset the damping to its original value.
6. Record the new settings. Approx. 25 s after the pushbutton for the 0 % or 100 % setting is pressed, the respective parameter is stored in the non-volatile memory.

IMPORTANT (NOTE)
This configuration procedure only changes the 4 … 20 mA current signal. The physical process pressure shown on the digital display or user interface is not affected. To avoid potential discrepancies, you can make corrections by following the menu path "Calibrate_Pressure Measurement_Balance Points" in the user interface.
After performing a correction, you must check the settings for the device.

7.4 Configuration with the LCD indicator

IMPORTANT (NOTE)
To access the control buttons for the LCD indicator, you must unscrew the housing cover with the inspection glass.

7.4.1 Menu navigation

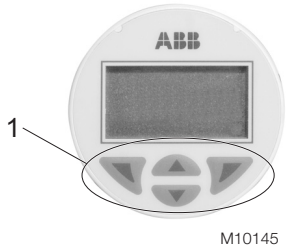

Fig. 18: LCD display

1 Operating buttons for menu navigation | 2 Menu name display | 3 Menu number display | 4 Marker for indicating the relative position within the menu | 5 Display showing the current functions of the and operating buttons

You can use the or operating buttons to browse through the menu or select a number or character within a parameter value.
Different functions can be assigned to the and operating buttons. The function that is currently assigned to them (5) is shown on the LCD display.

Control button functions

	Meaning
Exit	Exit menu
Back	Go back one submenu
Abort	Cancel a parameter entry
Next	Select the next position for entering numerical and alphanumeric values

	Meaning
Select	Select submenu / parameter
Edit	Edit parameter
OK	Save parameter entered

7.4.2 Process display

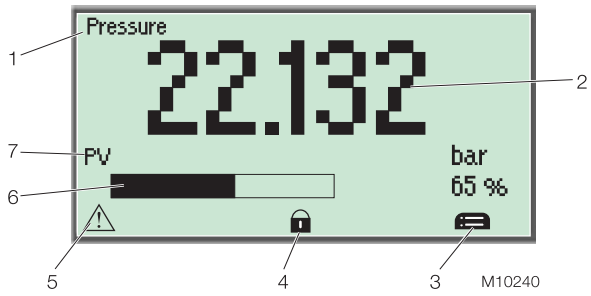

Fig. 19: Process display (example)

1 Line 1: Measuring point identifier |
2 Line 2: Current process values |
3 Symbol indicating button function |
4 "Write protection" symbol | 5 Diagnostic message |
6 Bargraph + numerical % value |
7 Line 3: Displays the variable / unit shown in line 2

The process display appears on the LCD display when the device is switched on. It shows information about the device and current process values.
The way in which the current process values (2) are shown can be adjusted on the configuration level.
The decimal point is positioned automatically so that the maximum value can be displayed as a six-figure value. If the value is exceeded, “Overflow” is shown as six upward or downward pointing arrows. A decimal point counts as a place and is no longer displayed after the sixth place.

Symbol description

Symbol	Description
	Call up configuration level.
	Write protection is enabled. The device is protected against changes to the parameter settings.

Example of positioning the decimal point:

Setting 0 … 1000.0 – in this case, even smaller values are only displayed with one decimal place.

Decimal places for variables

The following variables are displayed with a fixed decimal place:

Variable	Decimal places
Temperature (sensor temperature)	1
Output (%)	1
Current (output current)	2

Error messages on the LCD display

In the event of an error, a flashing message consisting of an icon and text (e.g., device defective) appears at the bottom of the process display. If you press the left LCD indicator button while a message is flashing, the text becomes permanent. A write protection icon will be covered by one of the above messages.

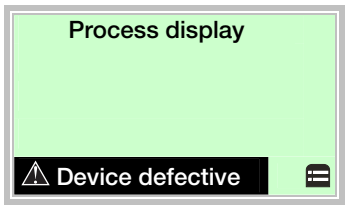

Symbol	Priority	Description
	1	Error message Device defective, refers to a serious device error (the device must be replaced).
	2 3	Warning message Refers to specific operating conditions or events (e.g., simulation active, maintenance required).
	4a 4b 4c	Process message Indicates that a parameter has fallen below or exceeded a process alarm condition.

7.4.3 Switching to the configuration level (parameterization)

The device parameters can be displayed and changed on the configuration level.

8. Use to switch to the configuration level.

7.4.4 Menu structure

The parameters are structured in the form of a menu. The menu consists of a maximum of three levels. Menu items with an asterisk (*) have additional parameters that are described in the next section.

main menu	Submenu 1	Submenu 2	Process units
Device Setup	Write Protect	yes	atm
		no	bar
	Apply Process Variable*	Lower Range Value	ft H_2O (68 °F)
		Upper Range Value	g/cm^2
	Set Process Variable*	Unit	in H_2O (4 °C)
		Lower Range Value	in H_2O (60)
		Upper Range Value	in H_2O (68)
	Offset*	Num. value entry (%)	in Hg (0 °C)
	Damping*	Num. value entry (s)	kg/ cm^2
	HART Output*	Unit	kPa
		Lower Range Value	mbar
		Upper Range Value	mm H_2O (4 °C)
	Fault Current	Upscale	mm H_2O (68)
		Downscale	mm Hg (0 °C)
	Installation angle	0 degrees	MPa
		45 degrees	Pa
	Factory Reset	90 degrees	psi
		135 degrees	Torr
		180 degrees	
Display	Main Operator View	Process Variable	**HART output units**
		HART Output	atm
		Output Current	bar
		Output %	ft H_2O (68 °F)
		Temperature	g/cm^2
	Bargraph	yes	in H_2O (4 °C)
		no	in H_2O (60)
	Contrast		in H_2O (68)
	Language	English	in Hg (0 °C)
		Deutsch	kg/ cm^2
Diagnosis	Process Variable		kPa
	HART Output		mbar
	Output Current		mm H_2O (4 °C)
	Output %		mm H_2O (68)
	Temperature		mm Hg (0 °C)
Communication	HART Tag		MPa
			Pa
Calibrate	Zero Trim		psi
			Torr
			cm
			ft
			in, m, mm, %, special

7.4.5 Parameter descriptions

Enabling / disabling (Write Protect)

Via LCD indicator, DTM or handheld terminal.

If “Write Protect” is enabled, it is not possible to configure the 261G/A pressure transmitter. All editing functions on the indicator are hidden, except for write protection. It is, however, possible to read out data. Write protection is applied for the entire device.

IMPORTANT (NOTE)

In addition, the “Local operation” option can be disabled via the graphical user interface (DTM) or a handheld terminal (HHT).

Editing functions are also hidden when the “Local operation” option is disabled, i.e., the 261G/A pressure transmitter is no longer configurable via the LCD indicator.

The “Local operation” option can only be enabled via the graphical user interface (DTM) or a handheld terminal.

Apply Process Variable

Set "Lower Range Value" and "Upper Range Value" with applied pressure on the device via the process or a pressure generator.

1. Apply the pressure for the "Lower Range Value" and wait approx. 30 s until it has stabilized.
2. Setting for "Lower Range Value": Click the right pushbutton for "OK" – The output current is set to 4 mA.
3. Apply the pressure for the "Upper Range Value" and wait approx. 30 s until it has stabilized.
4. Setting for "Upper Range Value": Click the right pushbutton for "OK" – The output current is set to 20 mA.

Set Process Variable

Set “Lower Range Value” and “Upper Range Value” without applied pressure by entering the corresponding pressure values via keypad.

Offset

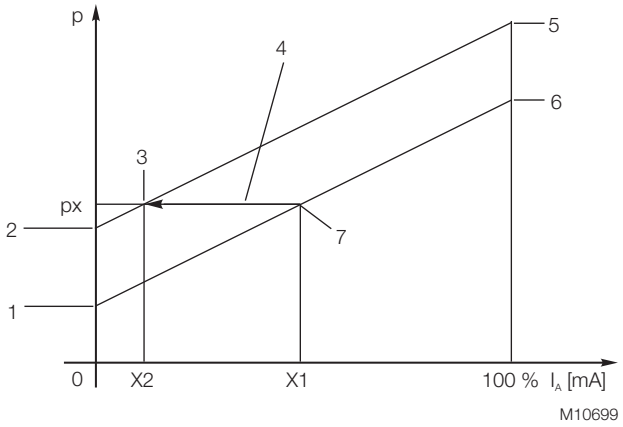

Fig. 20: Offset shift

1 Old zero | **2** New zero | **3** New balance point | **4** Offset shift | **5** New end value | **6** Old end value | **7** Old balance point

This function performs an offset shift of the characteristic so that it travels through a point specified by the user. This makes it possible to set the output signal of several measuring devices that measure the same process variable to the same value, without the need to perform calibration with applied pressure.

This function can be performed at any point on the characteristic under the following circumstances:

— Process variable is within the configured measuring range. The transmitter has a linear transmission characteristic.

— Enter the desired output current as a percentage to perform an offset shift for the measuring range.

— When a pressure px is applied, the transmitter displays the standardized output value x1 as a percentage. Based on the current application, however, the value x2 should be displayed. The value x2 in % is set via the LCD indicator. The transmitter calculates the new zero and the new end value, and adopts these new settings (see the figure “Offset shift”).

Damping
When the output signal for the transmitter is noisy as a result of the process, the signal can be smoothed (damped) electrically.
The additional time constant can be set between 0 s and 60 s in increments of 0.0001 s.
Damping does not affect the measured value shown in the digital display as a physical unit. It only affects the quantities derived from it such as the analog output current, HART output (freely assigned start value, end value and unit).

HART Output
HART output refers to freely assigned start value, end value and unit for the pressure measured. If the values are configured so that the 0 % and 100 % points correspond to 5 m and 20 m respectively, the HART output will indicate a value of 12.5 m at a pressure of 50 %.

Fault current
If a serious error is detected during the internal monitoring routines run by the transmitter, the transmitter switches the output signal to a specified minimum or maximum value as a message.
Use the menu item “Fault Current” to select the alarm response and the modulation direction of the output current in the event of a malfunction.
“Upscale” (High alarm) means that the output current is switched to the configured high alarm current.
“Downscale” (Low alarm) switches the output current to the configured low alarm current. The level of the low or high alarm current can only be changed using the graphical user interface (DTM) or handheld terminal with loaded DD (device description) of the 261 transmitter.
Setting limits:
— Min. alarm current: 3.5 … 4 mA
— Max. alarm current: 20 … 23.6 mA

Default setting from factory:
— Max. alarm current: 21 mA

Installation angle
You can specify the extent to which the transmitter deviates from the recommended nominal position (vertical, process connection pointing downward) by selecting one of the angular degree settings displayed. This compensates for the temperature-dependent effect of the mounting position.

Factory Reset
Restores the transmitter settings to the factory default.

Display – Main Operator View
The parameters listed can be displayed permanently in this view (failsafe memory).

Contrast
If the lighting conditions are unfavorable, making it difficult to read the LCD indicator, you can adjust the background by making it darker or lighter (or buttons).
The default setting is 50 %. If the menu cannot be read because the contrast has been adjusted too much or because of unfavorable conditions, e.g., change in temperature, pressing both outer buttons together for > 5 s will restore the default contrast settings.

Diagnosis

The parameters listed can be displayed temporarily in this view (not failsafe memory). The value configured under “Main operator view” remains unchanged.

IMPORTANT (NOTE)
The LCD indicator automatically returns to the process display approximately three minutes after the last button was pressed.

HART Tag

Each transmitter requires a unique bus ID in order to communicate within a bus structure. The bus ID (tag) can be entered via the “Communication” function and is subject to a maximum length of 8 characters. Characters can include uppercase letters, numbers, spaces and a few special characters.

Editing the "HART Tag":
Access menu via “Communication” according to the menu structure (see "Menu structure").
The Edit mode can be accessed via "Select" or "Edit" (see "Alphanumeric entry").

1. Select the required characters one by one and character by character from the character selection bar in the centre using the two buttons (character block moves to the left) and (character block moves to the right).
   A character is selected when the cursor is positioned on the character and the background is dark. The selected character is added to the upper area where the Tag Name is displayed.
2. Use the left button (Next) to move to the next editing area for the tag name.
3. Once the tag name has been entered fully (max. 8 characters), confirm by pressing the right button (OK). Press the button (Next) repeatedly to move the cursor to the right. Once the cursor reaches the ninth position, "Cancel" is displayed bottom right.
4. Cancel terminates and exits the Edit mode. To return to the start, press the left button (Next).

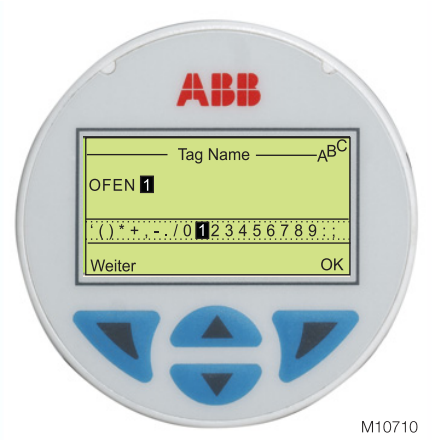

Fig. 21:

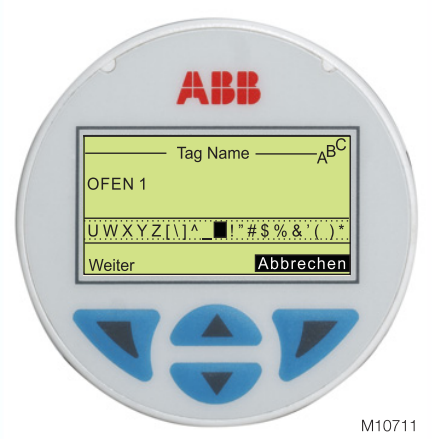

Fig. 22:

Zero Trim

This function allows a zero shift of the process pressure read in from the measuring cell.
If, for example, the transmitter displays a small pressure value at a "0 Pa" process pressure (transmitter was not installed precisely in vertical position), this pressure can be adjusted to "0 Pa".

7.5 Configuration with the PC/laptop or handheld terminal

A graphical user interface (DTM) is required for configuration of the transmitter via PC or laptop. For operating instructions, please refer to the software description.

Further information:
Data sheet for the DTM / SMART VISION
Communications protocol:
HART®
Hardware:
FSK modem for PC or laptop
HART handheld terminal (HHT):
e.g., 691 HT, HHT275/375, DHH800-MFC

You can use a handheld terminal to read out or configure/calibrate the transmitter. If a communication resistor is installed in the connected power supply unit, you can connect the handheld terminal directly at any point along the 4 ... 20 mA line.
If no communication resistor is present (min. 250 Ω), you will need to install one in the
line. The handheld terminal is connected between the resistor and transmitter, not between the resistor and power supply unit.

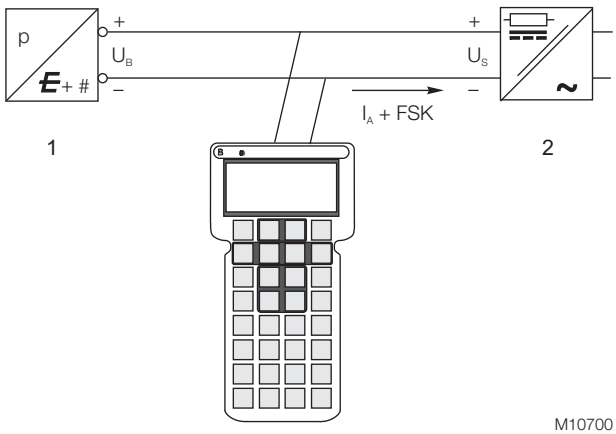

Fig. 23: Communication resistor in power supply unit
1 Transmitter | 2 Power supply unit

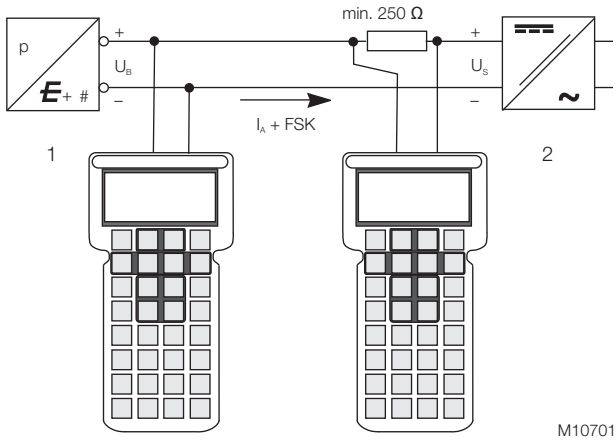

Fig. 24: Communication resistor in connection line

1 Transmitter | 2 Power supply unit

If a handheld terminal or a PC is being used for communication / configuration / parameterization in a potentially explosive atmosphere with type of protection "intrinsic safety", the devices used must be certified accordingly.
This applies even if the device is only connected for a short period of time. This proof of "intrinsic safety" must be supplied in addition to the transmitter.

For additional information, refer to the operating instructions included with the handheld terminal.
If the transmitter has been configured in the factory according to customer specifications for the measuring point, all you have to do is mount the transmitter as prescribed (to correct potential zero shifts, refer to the section "Correcting the zero shift"), and switch it on. The measuring point will now be ready for use.
If the transmitter is equipped with an LCD indicator, the current pressure/absolute pressure is displayed in % (factory setting, unless otherwise specified).
If, however, you wish to make changes to the configuration, a handheld terminal or - preferably - a graphical user interface (DTM) is required.
This DTM tool can be used to configure the device fully. It supports the HART protocol and runs on a PC or laptop, i.e., on an automated system.
Refer to the installation manual provided with the software for the steps required to install the operating tool. The most important parameters can be set under the path “Configure_Pressure Measurement”.
The program offers the option of configuring, polling, and testing the transmitter. In addition, offline configuration can be performed by means of an internal database. Each configuration step is subject to a plausibility check. You can call up context-sensitive help at any time by pressing the "F1" key.
We recommend that you save the existing configuration data on a separate data storage medium as soon as you receive the transmitter or before you change the configuration. To do this, select:
"File_Save".

7.6 Configuration with the graphical user interface (DTM)

7.6.1 System requirements

— Operating control program (e.g., SMART VISION version 4.01 or higher)
— DTM (Device Type Manager; graphical user interface)
— Operating system (depending on the respective control program)

1. The DTM is started in 3 stages, either using the right mouse button or via the menu item "Device". First, select "More", followed by "Edit".
2. When you select "Connect" (the 3rd stage), the full 261Gx / Ax transmitter data should be loaded.

Modified data will be underlined in blue.

IMPORTANT (NOTE)
If modified data is not displayed underlined in blue, click in another window before the data is transferred to the device. The modified value is then displayed underlined in blue.

3. Use "Save to device" to send this data to the device.

IMPORTANT (NOTE)
Saving the data in the transmitter automatically saves it to the non-volatile memory.
For this purpose, the transmitter must be supplied with power for two minutes.
Failure to observe this will cause the transmitter to revert to the previous data the next time it is used.

The communication name updates automatically when the data is loaded from the device.
The most important configuration/parameterization options in the user interface are briefly listed below. For further information on the menu commands, refer to the context-sensitive help.

IMPORTANT (NOTE)
Before beginning with device setup, make sure that write protection is disabled in the DTM as well as in the LCD indicator.

Menu path
“Configure_Basic Parameter_General”

7.7 Parameter descriptions

Write protection

Enabling/Disabling is performed via the DTM, handheld terminal or LCD indicator.
When “Write Protect” is enabled for the device, HART write protection is set, i.e., it is not possible to configure the device locally or via external tools such as a handheld terminal (HHT). It is, however, possible to read out data.
Write protection can be cancelled by selecting “User data write enabled”.

Local operation

Enabling/Disabling is performed via DTM or HHT.
Setup with indicator "Disabled" means that the transmitter cannot be configured using the pushbutton for the lower and upper range values or, if there is an LCD indicator present (optional), that it cannot be configured via the display menu.
Once “Local operation” is disabled, it cannot be enabled again on the LCD indicator.

Correcting the zero shift

Menu path
“Configure_Configure Pressure Measurement_Pressure”

Press the “Adjust” button in the “Zero Shift” field.
Calibration is performed immediately and saved to the failsafe memory.

Setting the “Lower Range Value” and “Upper Range Value”
Menu path:
“Configure_Configure Pressure Measurement_Pressure”

The “Scaling” field offers two setting options.

1. Enter value:
Enter the desired values in the input fields "Lower Range Value" and "Upper Range Value".

2. “Apply Process Variable”:
For settings, apply the pressure for the “Lower Range Value” and “Upper Range Value” to the measuring cell.
After the desired stabilized pressure is reached, press either "Set lower Range value" or "Set Upper Range Value". Make sure that the measuring limits are not exceeded.
Reducing stations with adjustable pressure and reference displays can be used as pressure generators. When making the connection, please ensure that there are no residual fluids (for gaseous testing materials) or air bubbles (for fluid testing materials) in the connection lines, since these can lead to errors during inspection.
The possible measuring error of the pressure generator should be at least three times smaller than the desired measuring error of the transmitter.

Adjust damping
Menu path:
“Configure_Configure Pressure Measurement_Pressure”

Enter the desired damping value in the field “Output parameter” in the line “Damping”.
The additional time constant can be set between 0 s and 60 s in increments of 0.0001 s.

Offset
Menu path:
“Configure_Configure Pressure Measurement_Pressure”

This function performs a parallel shift of the characteristic curve so that it travels through a point specified by the user. This makes it possible to set the output signal of several measuring devices that measure the same process variable to the same value without having to perform a calibration with applied pressure.
For further information, see “Offset shift”. Enter the respective new X2 value (in %) in the window “The current measurement value corresponds to”.

Description
Menu path:
"Device_Identification_Device"

A measuring point tag with a maximum length of 16 characters can be entered here. Characters can include uppercase letters, numbers and a few special characters.

Factory reset
Menu path:
“Device_Reset_Reset to factory default”

Restores the transmitter settings to the factory default.

Warm start
Menu path:
“Device_Reset_Warm Start”

The transmitter is restarted with its basic settings. Temporary settings such as “Simulating the current output” or “Diagnostic messages” are reset.

IMPORTANT (NOTE)
This action will briefly interrupt the connection.

8 Ex relevant specifications

8.1 Hazardous atmospheres

8.1.1 ATEX transmitter with type of protection "intrinsic safety Ex ia/ib" in accordance with Directive 94/9/EC

Transmitter with 4 ... 20 mA output signal and HART communication	
Certificate no.	PTB 05 ATEX 2032
Labeling	II 1/2 G Ex ia IIC T4 … T6 II 2 G Ex ib IIC T4 … T6

Permissible ambient temperature range according to temperature class:	
Ambient temperature	**Temperature class**
-40 … 85 °C (-40 … 185 °F)	T1 … T4
-40 … 71 °C (-40 … 159 °F)	T5
-40 … 56 °C (-40 … 132 °F)	T6

or

Labeling	II 1/2 D IP65 T95 °C Ex ia D II 2 D IP65 T95 °C Ex ib D

Permissible ambient temperature range:
-40 … 85 °C (-40 … 185 °F)

Supply and signal circuit with "Intrinsically safe Ex ia/ib IIB/IIC" type of protection", with the following maximum values	
	U_i = 30 V
	I_i = 130 mA
	P_i = 0.8 W
Effective internal capacitance	C_i = 10 nF
Effective internal inductance	L_i = 0.5 mH

8.1.2 IECEx transmitter with the following types of protection: "intrinsic safety ia", "non sparking nA" and "dust ignition protection by enclosure tb"

Transmitter with 4 ... 20 mA output signal and HART communication	
Certificate no.	IECEx ZLM 10.0002
Labeling	Ex ia IIC T6 bzw. T4 Ga/Gb Ex ia IIIC T66°C bzw. T95°C Da/Db Ex nA IIC T6 bzw. T4 Gc Ex tb IIIC T66°C bzw. T95°C Db

Maximum permissible ambient temperature range according to temperature class		
Ambient temperature	**Temperature class**	**Surface temperature**
-40 … 85 °C (-40 … 185 °F)	T4	95 °C (203 °F)
-40 … 56 °C (-40 … 133 °F)	T6	66 °C (151 °F)

Electrical data according to designation Ex ia IIC T6 or T4 Ga/Gb and Ex ia IIIC T66°C or T95°C IP6X Da/Db

Supply and signal circuit with "intrinsic safety" Ex ia or Ex ib type of protection, for connection to power supply units with the following maximum values (terminal signal ±)	
	U_i = 30 V
	I_i = 130 mA
	P_i = 0.8 W
Effective internal capacitance	C_i = 10 nF
Effective internal inductance	L_i = 0.5 mH

If the transmitter is being integrated into a partition between equipment protection level Ga or Da and a lower protection level, the transmitter must be supplied with power by an Ex ia intrinsically safe circuit.

Electrical data according to designation Ex nA IIC T6 or T4 Gc and Ex tb IIIC T66°C or T95°C IP6X Db

	$I_N \leq 22{,}5$ mA
	$U_N \leq 45$ V

8.1.3 Factory Mutual (FM)

Transmitter with 4 ... 20 mA output signal and HART communication	
Intrinsic Safety	Class I; II and III; Division 1; Groups A, B, C, D; E, F, G Class I; Zone 0; AEx ia Group IIC T6; T4
Non-incendive	Class I, II, III, Division 2; Groups A, B, C, D, F, G
Degree of protection	NEMA type 4X (indoor and outdoor installation)

8.1.4 Canadian Standards Association (CSA)

Transmitter with 4 ... 20 mA output signal and HART communication	
Intrinsic Safety	Class I; II and III; Division 1; Groups A, B, C, D; E, F, G Class I; Zone 0; Group IIC T6; T4
Non-incendive	Class I, II, III; Division 2; Groups A, B, C, D; F, G
Degree of protection	NEMA type 4X (indoor and outdoor installation)

Permissible ambient temperature range according to temperature class:			
	U_i max. = 30 V; I_i max = 130 mA; P_i = 0,8 W; C_i = 10 nF; L_i = 0,5 µH		
Ex ia II CT1 ... T6	T6	T5	T1 ... T4
	-40 ... 56 °C	-40 ... 71 °C	-40 ... 85 °C

Intrinsic safety	Gas and dust, order code X4
Degree of protection	Ex ia II CT1~T6; DIP A20 T_A 95 °C

8.1.5 NEPSI (China)

Transmitter with 4 ... 20 mA output signal and HART communication	
Intrinsic Safety	(Gas, order code X3)
Designation	Ex ia II CT1~CT6

Permissible ambient temperature range according to temperature class:			
	U_i max. = 30 V; I_i max = 130 mA; P_i = 0,8 W; C_i = 10 nF; L_i = 0,5 µH		
Ex ia II CT1 ... T6	T6	T5	T1 ... T4
	-40 ... 56 °C	-40 ... 71 °C	-40 ... 85 °C
DIP A20 T_A95 °C	-40 ... 85 °C		

9 Technical Data

9.1 Functional specifications

9.1.1 Measuring range limits and span limits

Sensor code	Measuring range upper limit (URL)	Measuring range lower limit (LRL) Model 261GS	Minimum measuring span	
			Model 261GS Gauge pressure	Model 261AS Absolute pressure
C	6 kPa 60 mbar 24 inH_2O	-6 kPa -60 mbar 24 inH_2O	0,3 kPa 3 mbar 1,2 inH_2O	0,3 kPa 3 mbar 2,25 mm Hg
F	40 kPa 400 mbar 160 inH_2O	-40 kPa -400 mbar -160 inH_2O	2 kPa 20 mbar 8 inH_2O	2 kPa 20 mbar 15 mm Hg
L	250 kPa 2500 mbar 1000 inH_2O	0 abs	12,5 kPa 125 mbar 50 inH_2O	12,5 kPa 125 mbar 93,8 mm Hg
D	1000 kPa 10 bar 145 psi	0 abs	50 kPa 500 mbar 7,25 psi	50 kPa 500 mbar 375 mm Hg
U	3000 kPa 30 bar 435 psi	0 abs	150 kPa 1,5 bar 21,7 psi	150 kPa 1,5 bar 21,7 psi
R	10000 kPa 100 bar 1450 psi	0 abs	500 kPa 5 bar 72,5 psi	500 kPa 5 bar 72,5 psi
V	60000 kPa 600 bar 8700 psi	0 abs	3000 kPa 30 bar 435 psi	-

IMPORTANT (NOTE)

The measuring range lower limit (LRL) for model 261AS is absolute 0 for all measuring ranges.

9.1.2 Span limits

Maximum span = measuring range upper limit (URL)

To optimize performance characteristics, it is recommended that you select the transmitter sensor code with the lowest turn down ratio.

TURNDOWN = Upper range limit / set span

9.1.3 Zero suppression and elevation

The zero position and span can be set to any value within the measuring range limits listed in the table if:

— Set span ≥ minimum span

9.1.4 Damping

Configurable time constant between 0 and 60 s.

This is in addition to the sensor response time, and can be adjusted via the optional LCD indicator, handheld terminal, or PC user interface.

9.1.5 Warm-up time

Ready for operation as per specifications in less than 10 s with minimum damping.

9.1.6 Insulation resistance

>100 MΩ at 500 V DC (between terminals and ground).

9.2 Operating limits

9.2.1 Pressure limits

Overpressure limits

No damage will occur during transmitter operation, if they are used within the specifications and subject to the following limits:

Sensor code	Overpressure limits, 0 abs to:
C, F	1 MPa, 10 bar, 145 psi
L	0.5 MPa, 5 bar, 72.5 psi
D	2 MPa, 20 bar, 290 psi
U	6 MPa, 60 bar, 870 psi
R	20 MPa, 200 bar, 2,900 psi
V	90 MPa, 900 bar, 13,050 psi
Perfluoroelastomer gasket T ≥ -15 °C (5 °F)	0.6 MPa abs, 6 bar abs, 87 psia
Perfluoroelastomer gasket T ≥ -25 °C (-13 °F)	0.18 MPa abs, 1.8 bar abs, 26 psia

Test pressure

When carrying out the transmitter pressure test, it is essential to observe the overpressure limits!

9.2.2 Temperature limits °C (°F)

Environment

Model 261GS, 261AS	Ambient temperature limits
Operating temperature range	-40 … 85 °C (-40 … 185 °F)
White oil filling	-6 … 85 °C (21 … 185 °F)
LCD display	-20 … 70 °C (-4 … 158 °F)
Viton seal	-20 … 85 °C (-4 … 185 °F)
Perfluoroelastomer gasket (see also "Pressure limits")	-25 or -15 … 80 °C (-13 or 5 … 176 °F)

IMPORTANT (NOTE)

For applications in potentially explosive atmospheres, the temperature range specified on the relevant certificate/approval must be observed.

Process

Model 261GS, 261AS	Process temperature limits
Process temperature range	-50 … 120 °C (-58 … 248 °F)
White oil filling	-6 … 120 °C (21 … 248 °F)[1]
Viton seal	-20 … 120 °C (-4 … 248 °F)
Perfluoroelastomer gasket (see also "Pressure limits")	-25 or -15 … 80 °C (-13 or 5 … 176 °F)

1 ≤ 85 °C (185 °F) for operating pressures below the atmospheric pressure

Storage

Model 261GS, 261AS	Storage temperature range
Storage temperature range	-50 … 85 °C (-58 … 185 °F)
LCD display	-40 … 85 °C (-40 … 185 °F)
White oil filling	-6 … 85 °C (21 … 185 °F)

Model 261GS, 261AS	Humidity during storage
Relative humidity	Up to 75 %

9.2.3 Limits for environmental effects

Electromagnetic compatibility (EMC)

The devices conform to the requirements and tests for EMC Directive 2004/108/EC, as well as EN 61000-6-3 concerning emitted interference and EN 61000-6-1, EN 61000-6-2 concerning interference immunity.
The devices fulfill NAMUR recommendations.

Low Voltage Directive

The devices meet the requirements of Directive 2006/95/EC.

Pressure Equipment Directive (PED)

The devices meet the requirements of Directive 97/23/EC, Category III, module H.

Humidity

Relative humidity: Up to 100 %
Condensation, icing: Permissible

Vibration resistance

Acceleration up to 2 g at frequencies of up to 1,000 Hz (according to IEC 60068-2-6).

Shock resistance

Acceleration: 50 g
Duration: 11 ms
(according to 60068-2-27)

Humid and dusty atmospheres (degree of protection)

The transmitter is dust and sand-tight, and is protected against immersion effects as defined by the following standards:

— IEC EN60529 (1989) with IP 67
(with IP 68, IP 69K on request)
— NEMA 4X
— JIS C0920

IP65 degree of protection with plug connection

9.3 Measuring accuracy

9.3.1 Reference conditions according to IEC 60770

— Ambient temperature TU = constant in the range 18 ... 30 °C (64 ... 86 °F)
— Relative humidity = constant in the range 30 ... 80 %
— Ambient pressure PU = constant in the range 950 ... 1,060 mbar.
— Measuring span based on zero position
— Transmitter with ceramic or Hastelloy separation diaphragm
— Filling fluid: Silicone oil
— Supply voltage: 24 V DC
— Load with HART: 250 Ω
— Transmitter not grounded
— Characteristic setting: linear, 4 ... 20 mA.

Unless otherwise stated, errors are specified as a % of the measuring span value.

The accuracy of the measurement in relation to the upper range limit (URL) is affected by the turndown (TD); i.e., the ratio of the upper range limit (URL) to the set span (URL/span). FOR OPTIMUM MEASURING ACCURACY, IT IS RECOMMENDED THAT YOU SELECT THE SENSOR CODE WHICH WILL PROVIDE THE LOWEST TD VALUE.

9.3.2 Dynamic response (according to IEC 61298-1)

Reaction time	100 ms
Time constant (63.2 % of total step response)	150 ms

9.3.3 Measuring error for setting cut-off point

Turndown	Measuring error
1:1 ... 10:1	±0.1 %
>10:1	± (0.1 + 0.005 x TD - 0.05) %

9.3.4 Ambient temperature

Thermal change in ambient temperature as regards the zero signal and span (turndown up to 6:1), in relation to the set span

Temperature range	Maximum effect on zero signal and span
-10 ... 60 °C (14 ... 140 °F)	All measuring ranges ± (0.2 % x TD + 0.2 %)
-40 ... -10 °C (-40 ... 14 °F)	All measuring ranges
60 ... 85 °C (140 ... 185 °F)	±((0.1 % / 10 K) x TD + (0.1 / 10K))

9.3.5 Temperature coefficient (T_K)

Effect of the ambient temperature per 10 K (but limited to the maximum effect of the temperature change, see previous information). The information refers to the set measuring span.

Temperature range	Effect on zero signal and span
-10 ... 60 °C (14 ... 140 °F)	Sensor code C, F: ± (0.15 % x TD + 0.15 %)
	Sensor code L, D, U, R, V: ± (0.05 % x TD + 0.05 %)

9.3.6 Power supply

Within the specified limits for the voltage / load, the total influence is less than 0.001 % of the upper measuring range limit per volt.

9.3.7 Load

Within the specified load / voltage limits, the total influence is negligible.

9.3.8 Electromagnetic fields

Total influence is less than 0.3 % of measuring span from 80 … 1,000 MHz and for field strengths up to 10 V/m when tested with unshielded conduit, with or without meter.

9.3.9 Mounting position

Nominal position: vertical; process connection at bottom.
The filling fluid of the measuring equipment affects the position if the mounting position differs. If the deviation is 90° from the nominal position and silicone oil is used as the filling fluid, this equates to 1.12 mbar + 0.01 mbar/10K.
This effect can be compensated by carrying out zero signal adjustment and configuring the mounting angle with the LCD indicator or DTM.

9.3.10 Long-term stability

±(0.10 x TD) % / year

9.3.11 Vibration effect

±(0.10 x TD) % acc. to IEC 61298-3

9.3.12 Total performance

Similar to DIN 16086
In the range -10 … 60 °C (14 … 140 °F):
0.42% of the set span (TD 1:1)
The total performance accuracy includes the measuring error (non-linearity including hysteresis and non-reproducibility), as well as the thermal change in the ambient temperature as regards the zero signal and span.

$$E_{perf} = \sqrt{(E_{\Delta TS1} + E_{\Delta TS2})^2 + E_{lin}{}^2}$$

E_{perf} = Base accuracy
$E_{\Delta TS1}$ = Effect of the ambient temperature on the URL
$E_{\Delta TS2}$ = Effect of the ambient temperature on the measuring span
E_{lin} = Measuring error (for setting cut-off point)

9.4 Technical specification

(Refer to ordering information sheets for variant availability related to specific model or versions code)

9.4.1 Materials

Process separation diaphragms[1]

Ceramic (AL_2O_3) gold-plated, Hastelloy C276,
Hastelloy C276 gold-plated,
Stainless steel (1.4435 / 316L)

Process connection[1]

Stainless steel (1.4404 / 316L)

Gasket[1]

(for sensor code C,F only)
Viton, perfluoroelastomer, Buna (NBR)

Sensor filling fluid

Silicone oil, inert filling (carbon fluoride), white oil (FDA)

Mounting bracket

Stainless steel

Sensor housing, electronics housing and cover

Stainless steel (1.4404 / 316L)

Filter for atmospheric ventilation

Filter housing: Plastic (standard), stainless steel (code EA, AB)
Filter material: Polyamide (PA)

Viewing window in cover (LCD display)

Polycarbonate, Makrolon 6557

O-ring cover

EPDM

Plates

Plastic data plate attached to the electronics housing

1 Transmitter parts that come into contact with fluid

9.4.2 Calibration

Standard:
— 0 to upper range limit (URL)
Optional:
— To specified measuring span

9.4.3 Optional extras

Mounting bracket

For vertical and horizontal 60 mm (2 in.) pipes or wall mounting

LCD display

Can be rotated in 90° increments into 4 positions

Additional tag plates

Code I2: For measuring point tag (up to 30 characters) and calibration specifications (up to 30 characters: lower and upper value plus unit), attached to transmitter housing.
Code I1: For customer data (4 lines with 30 characters each), attached to transmitter housing with wire.

Cleaning stage for oxygen applications (O2)

Certificates (test, design, characteristics, material traceability)

Name plate and operating instruction language

Communication plug connectors

9.4.4 Process connections

1/2-14 NPT female or male thread, DIN EN 837-1 G 1/2 B or G 1/2 B (HP) for convex seal, flush diaphragm, for installation in ball valve.

9.4.5 Electrical connections

M16 x 1.5 tap hole with cable gland (cable diameter approx. 5 … 10 mm), directly on housing
or
M20 x 1.5 (via adapter) with cable gland (cable diameter approx. 6 … 11 mm)
or
1/2-14 NPT (via adapter) without cable gland
or
Harting Han plug connector (with mating plug (socket outlet, for wire diameters of 0.75 … 1 mm^2 and cable diameters of 5 … 11 mm))
or
Miniature plug connector (without mating plug (socket outlet))

Terminals

HART version:
Two connections for signal/auxiliary power, for wire cross-sections from 0.5 … 1.5 mm^2 (16 AWG)

Grounding (optional)

External ground terminals for wire cross-sections up to 4 mm^2 (12 AWG).

9.4.6 Weight

(without options)
— Approx. 0.7 kg (1.54 lb)
— Additional 650 G (1.5 lb)

9.4.7 Packaging

Carton with dimensions of approx. 240 x 140 x 190 mm (9.45 x 5.51 x 7.48 in.)

9.5 Mounting dimensions
(not design data) - dimensions in mm (inch)
9.5.1 Standard version

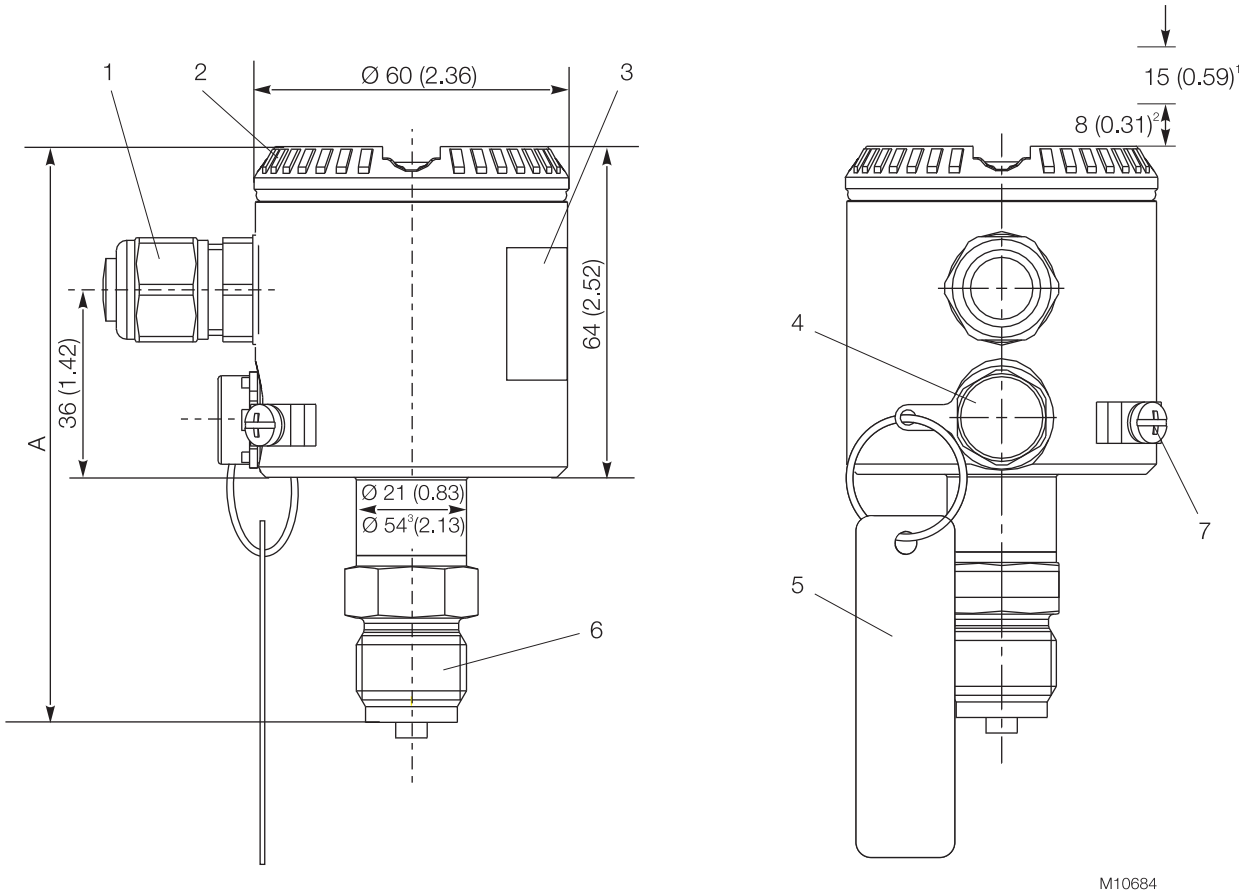

Fig. 25: Dimensions - Standard version
1 Electrical connection | 2 Housing cover | 3 Name plate | 4 Filter for atmospheric compensation | 5 Tag (optional) | 6 Process connection | 7 Grounding/equipotential bonding terminal (optional)

1 Space for removing the cover required
2 With LCD indicator
3 Dimensions for sensor code C, F with ceramic diaphragm material

Dimension "A" is dependent on the process connection as per the following table:

Process connection	Dimension "A" in mm (inch)
1/2-14 NPT male thread	111 (4.37)
1/2-14 NPT female thread	106 (4.17) / (110 (4.33) sensor V)
DIN EN 837-1 G 1/2 B	111 (4.37)
DIN EN 837-1 G 1/2 B (HP) for connections with convex seal	121 (4.76)

9.5.2 Version with the options “LCD indicator” and “Harting Han plug”

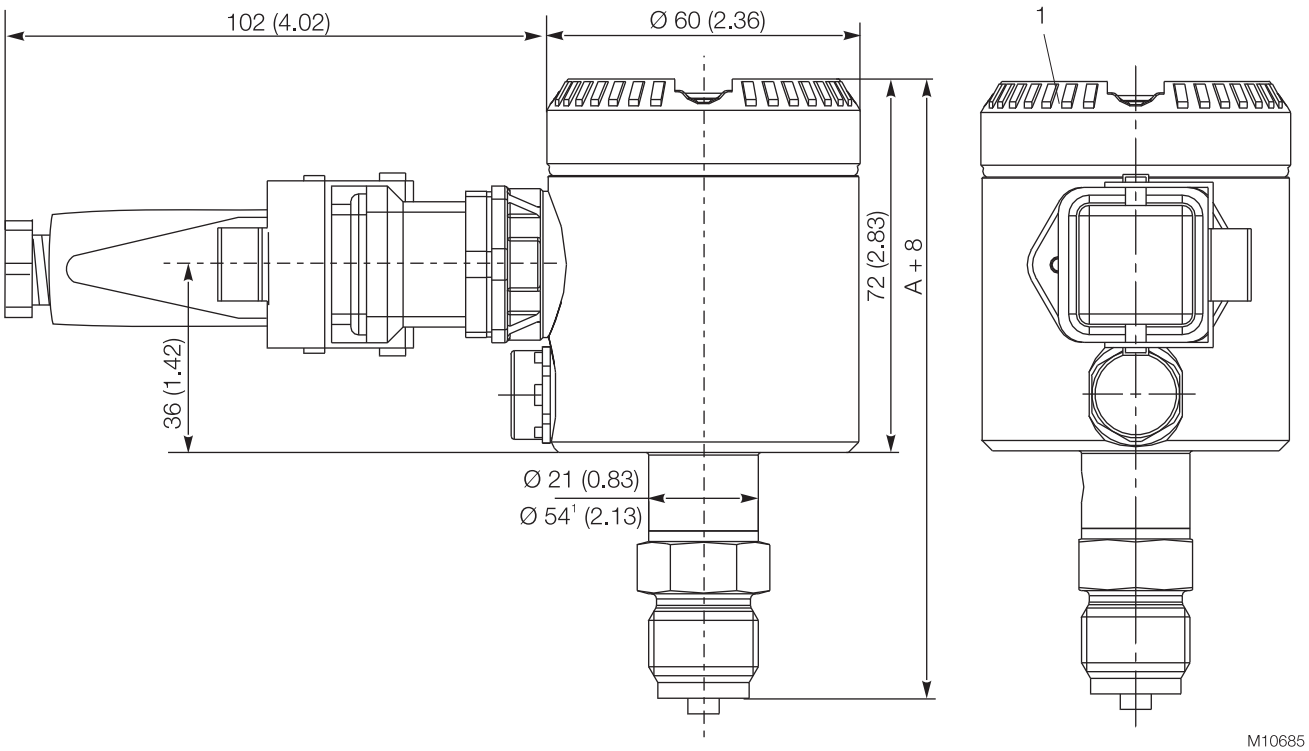

Fig. 26: Dimensions - With options
1 Housing cover for LCD indicator option

1 Dimensions for sensor code C, F with ceramic diaphragm material

Dimension "A" is dependent on the process connection as per the following table:

Process connection	Dimension "A" in mm (inch)
1/2-14 NPT male thread	111 (4.37)
1/2-14 NPT female thread	106 (4.17) / (110 (4.33) sensor V)
DIN EN 837-1 G 1/2 B	111 (4.37)
DIN EN 837-1 G 1/2 B (HP) for connections with convex seal	121 (4.76)

9.5.3 Transmitter with flush diaphragm

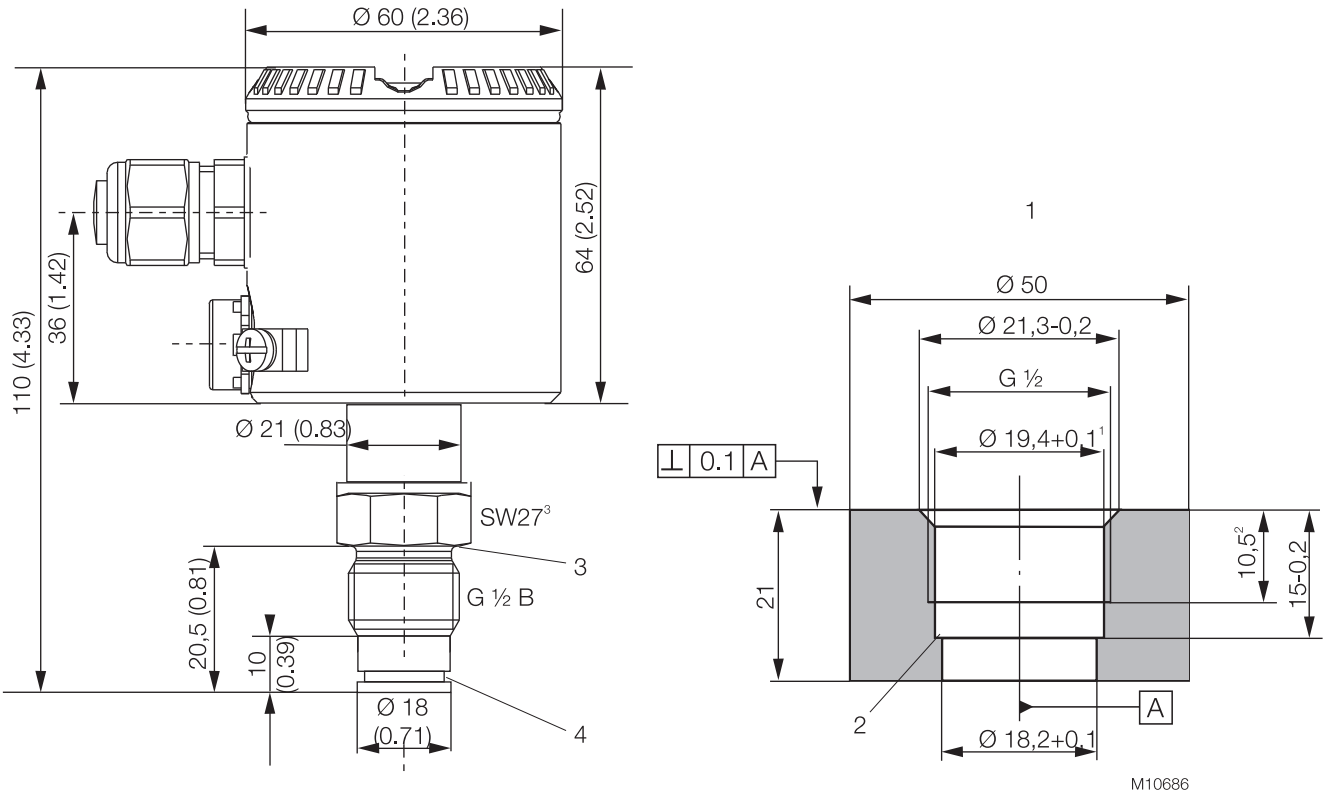

Fig. 27: Dimensions - With flush diaphragm
1 Welded connections / tapped hole for flush diaphragm, part no. 284903 | 2 No burrs | 3 Groove for gasket DIN 3869 - 21 18.5 x 23.9 x 1.5 | 4 Groove for O-ring 15 x 2

1 Bevel after cutting threads
2 Minimum dimension
3 Wrench size 27

9.5.4 Version with ball valve connection

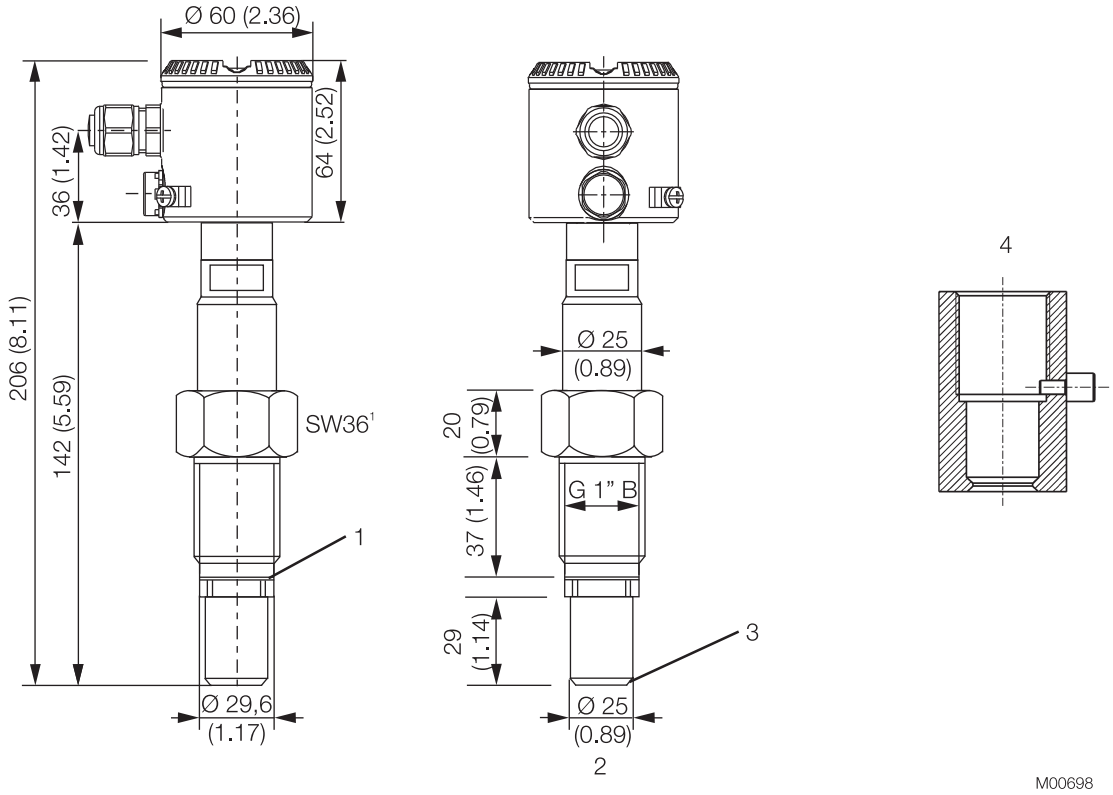

Fig. 28: Dimensions - With ball valve connection
1 Shim | 2 Diaphragm diameter: ~ 20 mm (0.79 inch) | 3 metal / metal conical seal, diaphragm is process-bonded | 4 Weld-in sleeve G 1", part no.: 789516

1 Wrench size 36

9.5.5 Mounting with angle bracket (optional)

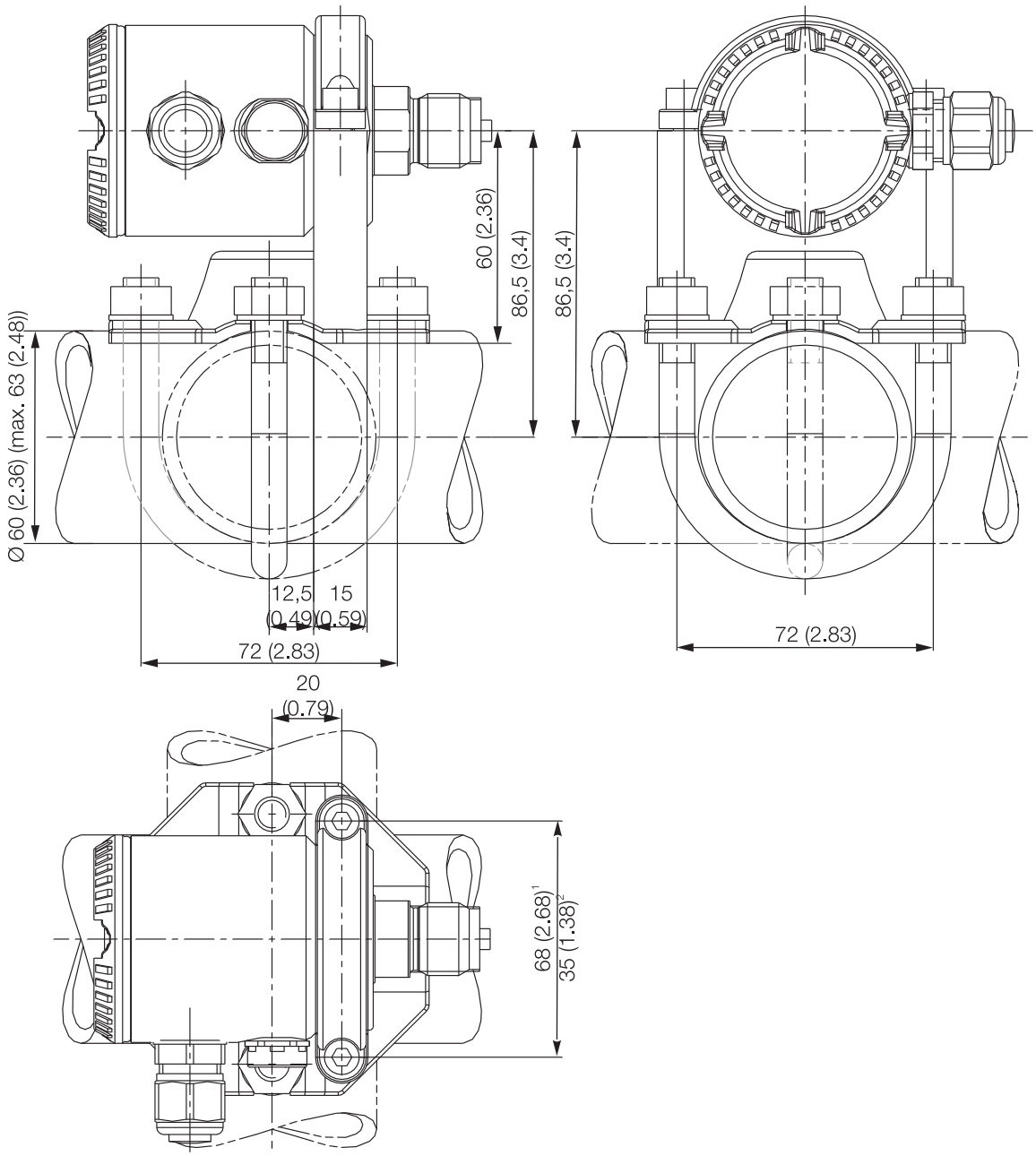

Fig. 29: Dimensions - Pipe / wall mounting

1 Dimensions for sensor code C, F with ceramic diaphragm material
2 Sensor code C, F, L, D, U, 1, R, V with metal diaphragms

IMPORTANT (NOTE)

The bracket for wall or pipe mounting has four holes with a Ø of 10.5 mm. The holes are arranged in a square and spaced 72 mm away from one another.

10 Maintenance / Repair

WARNING – Bodily injury
The device can be operated at high pressure and with aggressive media.
Any medium that squirts out can cause severe injuries.
Depressurize the pipeline/tank before opening the transmitter connection.

NOTICE – Potential damage to device as a result of electrostatic charging!
When the housing is open, EMC protection is impaired and there is no longer any protection against accidental contact.
Do not touch conductive parts of the device.

Corrective maintenance work may only be performed by trained personnel.
Before removing the device, depressurize it and any adjacent lines or containers.
Check whether hazardous materials have been used as materials to be measured before opening the device. Residual amounts of hazardous material may still be present in the device and could escape when it is opened.
Within the scope of operator responsibility, check the following as part of a regular inspection:
— the pressure-carrying walls / lining of the pressure device
— the measurement-related function
— the leak tightness
— the wear (corrosion)

If pressure transmitters are used as intended under normal operating conditions, no maintenance is required.
It is sufficient to check the output signal at regular intervals (in accordance with the operating conditions), as described in the instructions in the section "Operation". If deposits are expected to accumulate, the measuring equipment should be cleaned on a regular basis, in accordance with the operating conditions.
Cleaning should ideally be carried out in a workshop.

10.1 Removal

WARNING – Potential danger if device is disassembled incorrectly!
Before removing or disassembling the device, check for hazardous process conditions such as pressure on the device, high temperatures, aggressive or toxic media, and so on.
Carefully read the instructions in the sections “Safety", "Mounting", and “Electrical connections”, and perform the specified steps in reverse order.

11 Appendix

11.1 Approvals and certifications

The version of the device as provided by us meets the requirements of the following EU directives:

- EMC Directive 2004/108/EC
- Low Voltage Directive 2006/95/EC
- Pressure Equipment Directive (PED) 97/23/EC

Explosion protection

Designation relating to intended use in potentially explosive atmospheres in compliance with:

- ATEX Directive

IMPORTANT (NOTE)
All documentation, declarations of conformity, and certificates are available in ABB's download area.
www.abb.com/pressure

EG-KONFORMITÄTSERKLÄRUNG

EC DECLARATION OF CONFORMITY
ATTESTATION DE CONFORMITE C.E.

Hersteller: *Manufacturer / Fabricant:*	**ABB Automation Products GmbH** **Minden**
Anschrift: *Address / Adresse:*	**Schillerstraße 72** **D-32425 Minden**
Produktbezeichnung: *Product name:* *Désignation du produit:*	**Druck-Messumformer - 261A, 261G** *Pressure Transmitter – 261A, 261G* *Transmetteur de Pression – 261A, 261G*

Das Produkt stimmt mit den Vorschriften folgender Europäischer Richtlinien überein:
This product meets the requirements of the following European directives:
Les produits répondent aux exigences des Directives C.E. suivantes:

2004/108/EG *2004/108/EC* *2004/108/CE*	**EMV-Richtlinie *** *Electromagnetic Compatibility Directive ** *Directives concernant la compatibilité électromagnétique **	
2006/95/EG *2006/95/EC* *2006/95/CE*	**Niederspannungsrichtlinie *** *EC-Low-Voltage Directive ** *Directives concernant la basse tension **	
97/23/EG *97/23/EEC* *97/23/C.E.E.*	**Druckgeräterichtlinie, Kategorie III Modul H** *Pressure Equipment Directive, Category III Module H* *Directive Equipements sous Pression, Catégorie III Module H*	**(für Druck PS > 200bar)** *(for pressure PS > 200 bar)* *(pour pression PS > 200 bar)*

Druck/*Pressure/Pression* **PS ≤ 200bar: SEP**

CE 0045

Für Geräte in Ex-Ausführung gemäß Kennzeichnung auf Typschild gilt zusätzlich:
For products in Ex design according to identification on nameplate the following is additionally applicable:
Pour des produits en exécution Ex selon marque sur plaque signalétique le suivant est aussi applicable:

94/9/EG	**ATEX-Richtlinie**
94/9/EEC	*ATEX Directive*
94/9/C.E.E.	*ATEX Directive*

*** einschließlich Änderungen und deutscher Umsetzung durch das EMVG und Gerätesicherheitsgesetz**
** including alterations and German realization by the EMC law and the instruments safety law*
** y compris les modifications et la réalisation allemande par la loi cocernant la compatibilité électromagnétique et la sécurité d'appareils*

Die Übereinstimmung mit den Vorschriften dieser Richtlinien wird nachgewiesen durch die vollständige Einhaltung folgender Normen:
Conformity with the requirements of these Directives is proven by complete adherence to the following standards:
La conformité avec les exigences de ces directives est prouvée par l'observation complète des normes suivantes:

EN 61 000-6-1 / EN 61 000-6-2 / EN 61 000-6-3 / EN 61 000-6-4 / EN 61 010-1

Ex: Es gelten die Normen der entsprechenden EG-Baumusterprüfbescheinigungen
The standards of the relevant type-examination certificates shall apply
Il convient d'appliquer les normes des certificats d'homologation CE

02.07.2009		
Datum *Date* *Date*	**Dr. Wolfgang Scholz** **Leiter R&D** Head of R&D Responsable R&D	**Bernhard Kruse** **Leiter Qualitätsmanagement** Head of Quality Management Responsable Assurance de la Qualité

EG-Konformität_261_07.2009.doc

Statement on the contamination of devices and components

Repair and / or maintenance work will only be performed on devices and components if a statement form has been completed and submitted.
Otherwise, the device / component returned may be rejected. This statement form may only be completed and signed by authorized specialist personnel employed by the operator.

Customer details:

Company:	
Address:	
Contact person:	Telephone:
Fax:	E-Mail:

Device details:

Typ:	Serial no.:
Reason for the return/description of the defect:	

Was this device used in conjunction with substances which pose a threat or risk to health?

☐ Yes ☐ No

If yes, which type of contamination (please place an X next to the applicable items)?

Biological	☐	Corrosive / irritating	☐	Combustible (highly / extremely combustible)	☐
Toxic	☐	Explosiv	☐	Other toxic substances	☐
Radioactive	☐				

Which substances have come into contact with the device?

1.
2.
3.

We hereby state that the devices / components shipped have been cleaned and are free from any dangerous or poisonous substances.

Town/city, date	Signature and company stamp

Contact us

ABB Ltd.
Process Automation
Howard Road, St. Neots
Cambridgeshire, PE19 8EU
UK
Tel: +44 (0)1480 475321
Fax: +44 (0)1480 217948

ABB Inc.
Process Automation
125 E. County Line Road
Warminster PA 18974
USA
Tel: +1 215 674 6000
Fax: +1 215 674 7183

ABB Automation Products GmbH
Process Automation
Schillerstr. 72
32425 Minden
Germany
Tel: +49 551 905-534
Fax: +49 551 905-555

www.abb.com

Note
We reserve the right to make technical changes or modify the contents of this document without prior notice. With regard to purchase orders, the agreed particulars shall prevail. ABB does not accept any responsibility whatsoever for potential errors or possible lack of information in this document.

We reserve all rights in this document and in the subject matter and illustrations contained therein. Any reproduction, disclosure to third parties or utilization of its contents in whole or in parts – is forbidden without prior written consent of ABB.

Copyright© 2013 ABB
All rights reserved

3KXP200001R4201

IM/261Gx/Ax-EN Rev. 07 09.2013

Power and productivity
for a better world™

10.3 - A1-2 – ABB TURBIDIMETER

User Guide IM/4690–EN Rev. E

4690 Series
Turbidity systems

Accurate, reliable turbidity measurement

Introduction

An ABB Turbidity system comprises a 4690 / 4695 analyzer and a 7998 turbidity sensor.

The analyzer provides the operator interface and communications to other devices.

The signal from the turbidity sensor is converted by the analyzer and the information is presented on a large, custom-designed, easy-to-read, backlit liquid crystal display (LCD).

The analyzer can be programmed to work with any of the 7998 series sensors and the operating range can also be configured to meet users' requirements.

Available in wall- / pipe-mount or 1/4 DIN panel-mount versions, the analyzer is protected to IP66, ensuring reliable operation in the most demanding situations. The same level of protection is maintained during programming and calibration.

Power and productivity
for a better world™

The Company

We are an established world force in the design and manufacture of measurement products for industrial process control, flow measurement, gas and liquid analysis and environmental applications.

As a part of ABB, a world leader in process automation technology, we offer customers application expertise, service and support worldwide.

We are committed to teamwork, high quality manufacturing, advanced technology and unrivalled service and support.

The quality, accuracy and performance of the Company's products result from over 100 years experience, combined with a continuous program of innovative design and development to incorporate the latest technology.

Contents

1 Safety 2
1.1 Electrical Safety 2
1.2 Symbols 2
1.3 Health & Safety 2
1.4 Product Disposal 2

2 Turbidity Systems 3
2.1 7998 Sensors 3
2.2 Turbidity Measurement Systems 3

3 Installation 5
3.1 Siting Requirements 5
3.1.1 Analyzer 5
3.1.2 Turbidity Sensor 5
3.2 Mounting the Analyzer 6
3.2.1 Wall-mounting 6
3.2.2 Pipe-mounting 6
3.2.3 Panel-mounting 7
3.3 Mounting the Turbidity Sensor 8
3.3.1 Sample Flowrate 9
3.4 Installing the Optional De-bubbler 10
3.4.1 Mounting the De-bubbler 10
3.4.2 Set Up Procedure for De-bubbler 11

4 Electrical Connections 12
4.1 Access to Terminals 12
4.1.1 Wall- / Pipe-mount Analyzer 12
4.1.2 Panel-mount Analyzer 12
4.2 Safety Information 13
4.2.1 Relay Contact Protection and Interference Suppression 13
4.3 Connections 14
4.3.1 Wall- / Pipe-mount Analyzer Connections 14
4.3.2 Panel-mount Analyzer Connections 15
4.4 Selecting the Mains Voltage 16
4.4.1 Wall- / Pipe-mount Analyzer 16
4.4.2 Panel-mount Analyzer 16
4.5 Turbidity Sensor Connections 17

5 Controls and Display 18
5.1 Display 18
5.2 Control Familiarization 18

6 Operation 19
6.1 Analyzer Start-up 19
6.2 Operation – Turbidity Measurement Mode 19
6.2.1 Operating Page 19

7 Calibration 20
7.1 Care and Maintenance of Secondary Standards 20
7.2 Performing a Calibration Verification with a Secondary Standard 21
7.3 Performing a Calibration with a Primary Standard 22

8 Configuration and Electrical Calibration 26
8.1 Access to Configuration Pages 26
8.2 Language Page 26
8.3 Set Up Parameter Page 27
8.4 Set Up Outputs Page 29
8.5 Set Up Serial Interface Page 31
8.6 Electrical Calibration 32
8.6.1 Equipment Required 32
8.6.2 Preparation 32
8.6.3 Electrical Calibration Page 33

9 Maintenance 34
9.1 Sensor Cleaning 34
9.1.1 Sensors Without Wiper Unit 34
9.1.2 Sensors With Wiper Unit 34

10 Fault Finding 35
10.1 Error Messages 35
10.2 Unstable or Erratic Readings 36
10.3 Intermittent Short Term Spikes in Turbidity Readings 36

11 Specification 37

12 Spares and Consumables 39
12.1 Maintenance Kits 39
12.2 Accessories 39
12.3 Upgrade Kits 39
12.4 Strategic Spares 39
12.5 Software 40
12.6 De-bubbler 40

1 Safety

Information in this manual is intended only to assist our customers in the efficient operation of our equipment. Use of this manual for any other purpose is specifically prohibited and its contents are not to be reproduced in full or part without prior approval of the Technical Publications Department.

1.1 Electrical Safety

This equipment complies with the requirements of CEI/IEC 61010-1:2001-2 'Safety Requirements for Electrical Equipment for Measurement, Control and Laboratory Use' and complies with US NEC 500, NIST and OSHA.

If the equipment is used in a manner NOT specified by the Company, the protection provided by the equipment may be impaired.

1.2 Symbols

One or more of the following symbols may appear on the equipment labelling:

	Warning – Refer to the manual for instructions
	Caution – Risk of electric shock
	Functional earth (ground) terminal
	Protective earth (ground) terminal

	Direct current supply only
	Alternating current supply only
	Both direct and alternating current supply
	The equipment is protected through double insulation

1.3 Health & Safety

Health and Safety

To ensure that our products are safe and without risk to health, the following points must be noted:

- The relevant sections of these instructions must be read carefully before proceeding.
- Warning labels on containers and packages must be observed.
- Installation, operation, maintenance and servicing must be carried out only by suitably trained personnel and in accordance with the information given.
- Normal safety precautions must be taken to avoid the possibility of an accident occurring when operating in conditions of high pressure and / or temperature.

Safety advice concerning the use of the equipment described in this manual or any relevant hazard data sheets (where applicable) may be obtained from the Company address, together with servicing and spares information.

1.4 Product Disposal

Note. The following only applies to European customers.

ABB is committed to ensuring that the risk of any environmental damage or pollution caused by any of its products is minimized as far as possible. The European Waste Electrical and Electronic Equipment (WEEE) Directive (2002/96/EC) that came into force on August 13 2005 aims to reduce the waste arising from electrical and electronic equipment; and improve the environmental performance of all those involved in the life cycle of electrical and electronic equipment.

In conformity with European local and national regulations (EU Directive 2002/96/EC stated above), electrical equipment marked with the above symbol may not be disposed of in European public disposal systems after 12 August 2005.

2 Turbidity Systems

2.1 7998 Sensors

Details of the individual sensors are shown in Table 2.1.

Sensor No.	Principle of Sensor	Type of Sensor	Minimum Range	Maximum Range
7998 001 (EPA 180.1)	Incandescent lamp Nephelometric	Flow-through (with wiper unit)	0 to 1 NTU	0 to 40 NTU
7998 002 (EPA 180.1)	Incandescent lamp Nephelometric	Flow-through (with wiper unit)	0 to 40 NTU	0 to 400 NTU
7998 006 (EPA 180.1)	Incandescent lamp Nephelometric	Flow-through (without wiper unit)	0 to 1 NTU	0 to 40 NTU
7998 007 (EPA 180.1)	Incandescent lamp Nephelometric	Flow-through (without wiper unit)	0 to 40 NTU	0 to 400 NTU
7998 011 (ISO 7027)	Infrared LED Nephelometric	Flow-through (with wiper unit)	0 to 1 NTU	0 to 40 NTU
7998 012 (ISO 7027)	Infrared LED Nephelometric	Flow-through (with wiper unit)	0 to 40 NTU	0 to 400 NTU
7998 016 (ISO 7027)	Infrared LED Nephelometric	Flow-through (without wiper unit)	0 to 1 NTU	0 to 40 NTU
7998 017 (ISO 7027)	Infrared LED Nephelometric	Flow-through (without wiper unit)	0 to 40 NTU	0 to 400 NTU

Table 2.1 7998 Sensor Range

2.2 Turbidity Measurement Systems

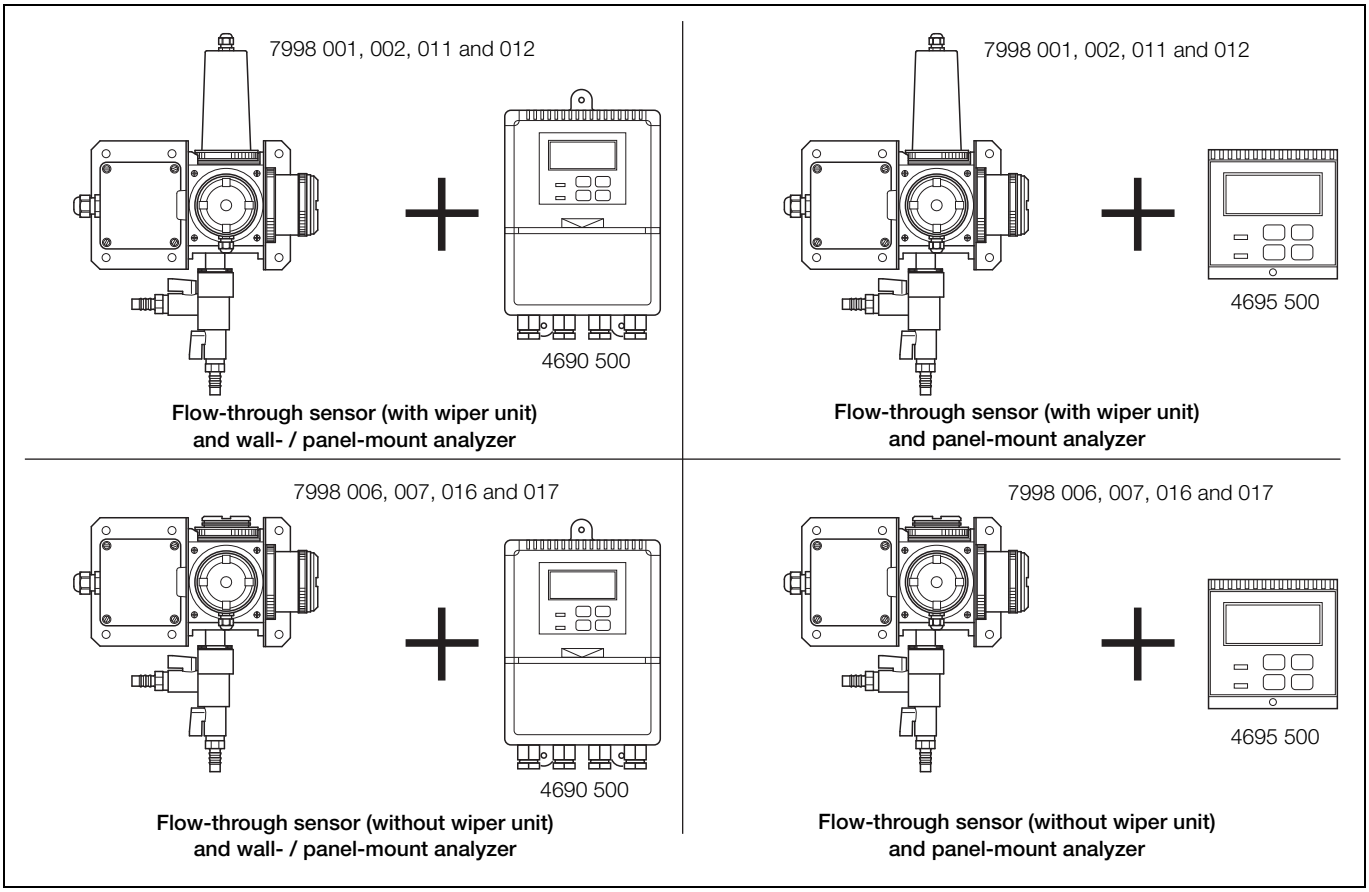

Fig. 2.1 System Arrangements

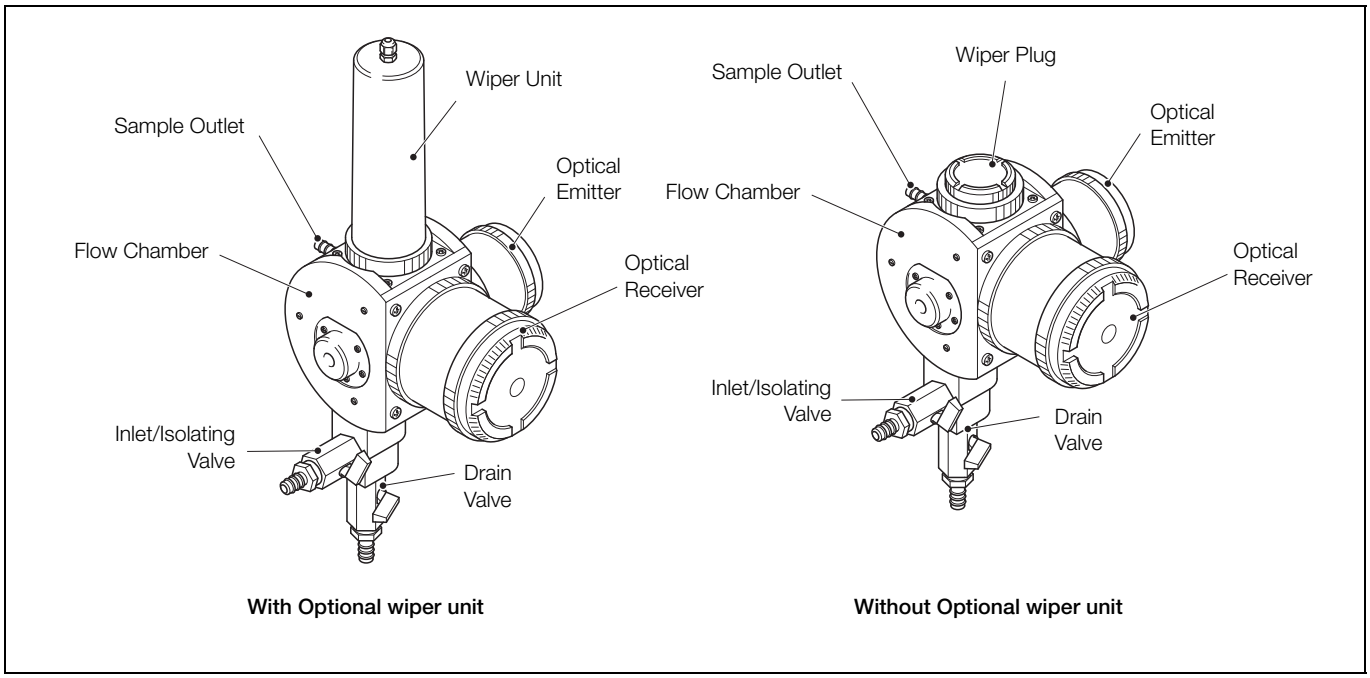

Fig. 2.2 Turbidity Sensors – Main Components

3 Installation

3.1 Siting Requirements

3.1.1 Analyzer

Caution.

- Mount in a location free from excessive vibration.
- Mount away from harmful vapors and dripping fluids.

Note. Mount the analyzer at eye level to enable an unrestricted view of the front panel displays and controls.

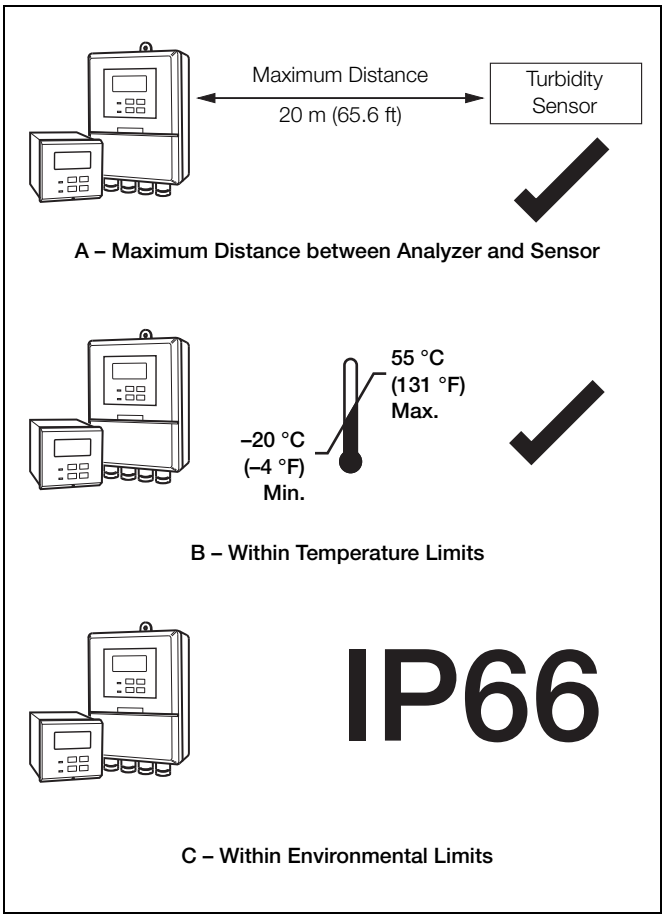

Fig. 3.1 Siting Requirements – Analyzer

3.1.2 Turbidity Sensor

To enable the turbidity sensor to be removed easily for maintenance, ensure an all-round clearance of 200 mm (7.9 in) – see Section 3.3, page 8 for the overall dimensions of the sensor.

Note. Ensure the sensor is located at an appropriate height to ensure ease of access during calibration and cleaning.

Caution. Mount the sensor in a location away from direct sunlight.

3.2 Mounting the Analyzer

3.2.1 Wall-mounting

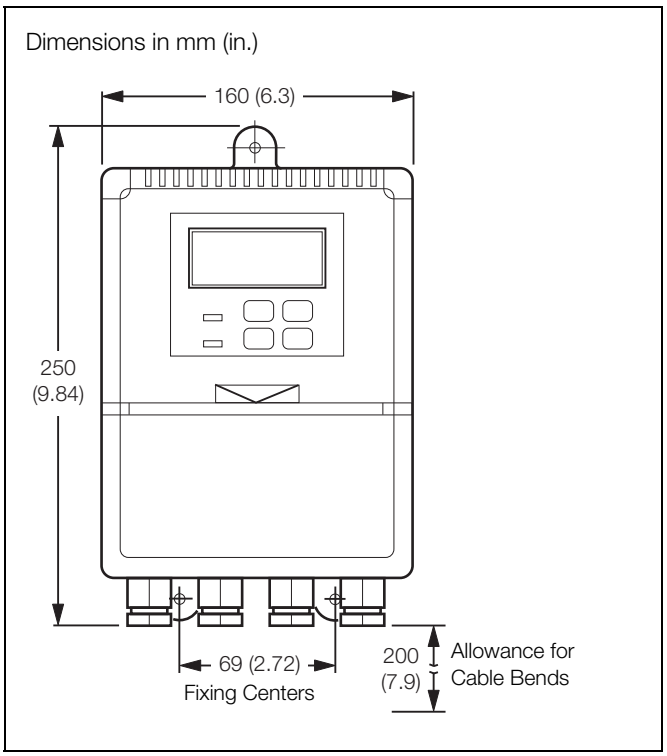

Fig. 3.2 Overall Dimensions

Referring to Fig. 3.3:

1. Mark fixing centers (see Fig. 3.2).
2. Drill suitable holes.
3. Secure analyzer to wall using suitable fixings.

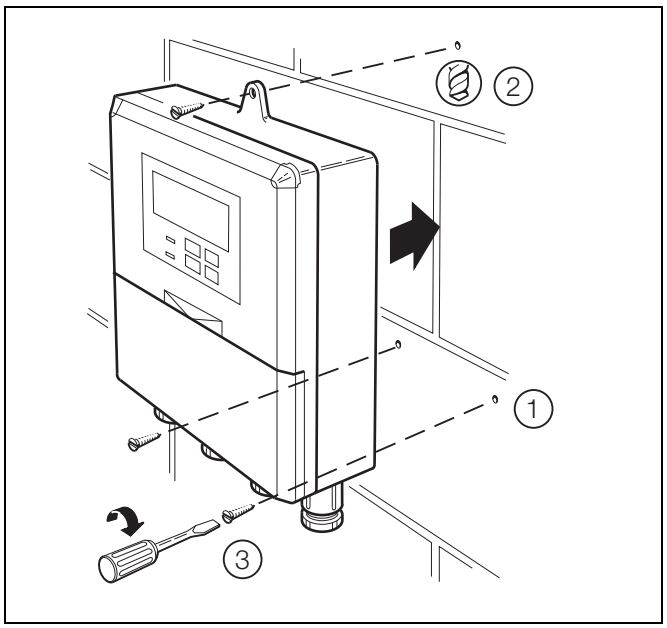

Fig. 3.3 Wall-mounting

3.2.2 Pipe-mounting

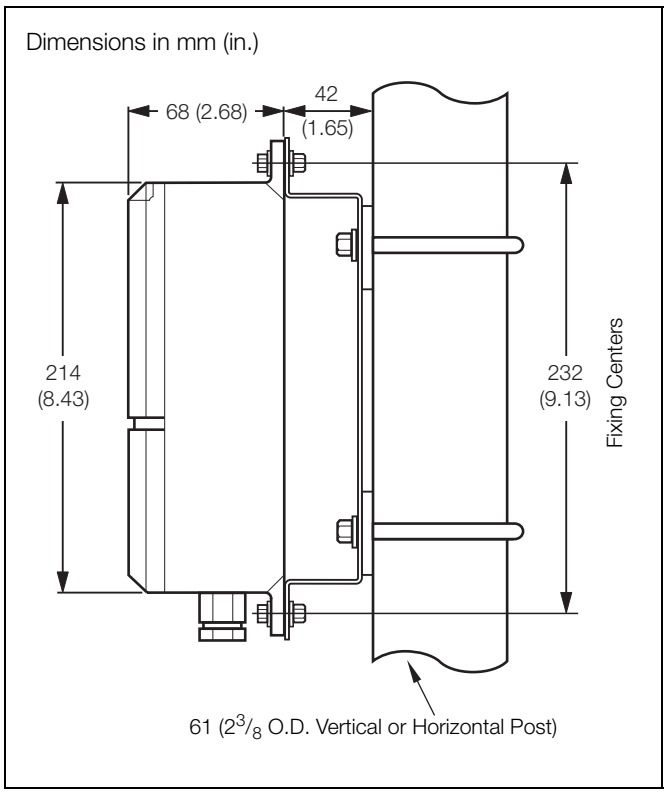

Fig. 3.4 Overall Dimensions

Referring to Fig. 3.5:

1. Position 'U' bolts on pipe.
2. Position plates over 'U' bolts.
3. Secure plates.
4. Secure analyzer to mounting plate.

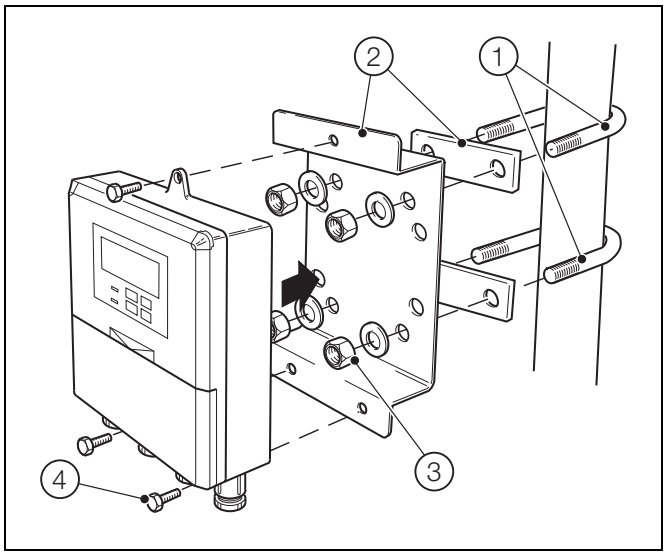

Fig. 3.5 Pipe-mounting

3.2.3 Panel-mounting

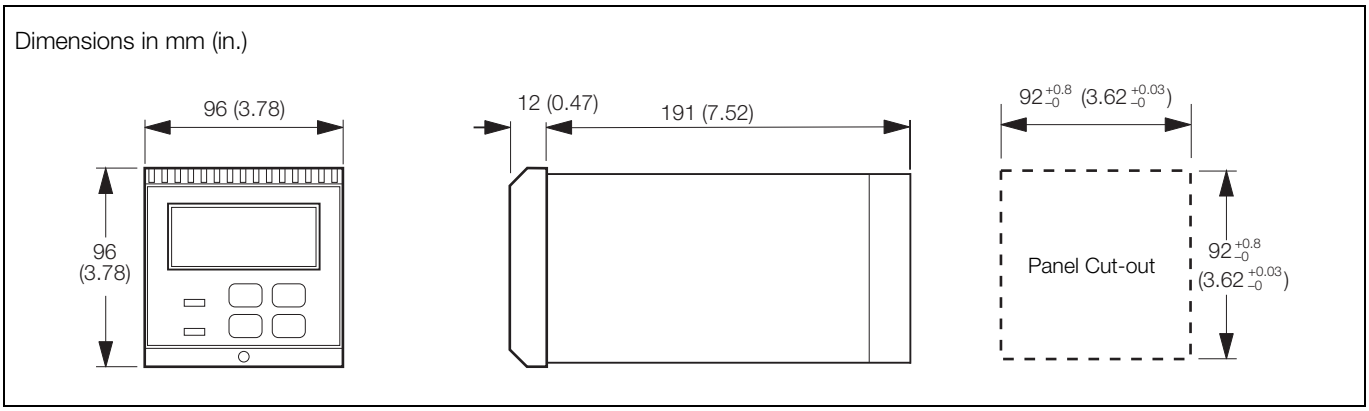

Fig. 3.6 Overall Dimensions

Referring to Fig. 3.5:

1. Cut a hole in the panel (see Fig. 3.6 for dimensions). Analyzers may be close stacked to DIN 43835.
2. Loosen the retaining screw on each panel clamp.
3. Remove the panel clamp and anchors from the analyzer case.
4. Insert the analyzer into the panel cut-out.
5. Refit the panel clamps to the case, ensuring that the panel clamp anchors are located correctly in their slot.
6. Secure the analyzer by tightening the panel clamp retaining screws.

> **Caution.** The clamp must fit flat on the analyzer casing. If the clamp is bowed, the securing screw is overtight and sealing problems may occur.

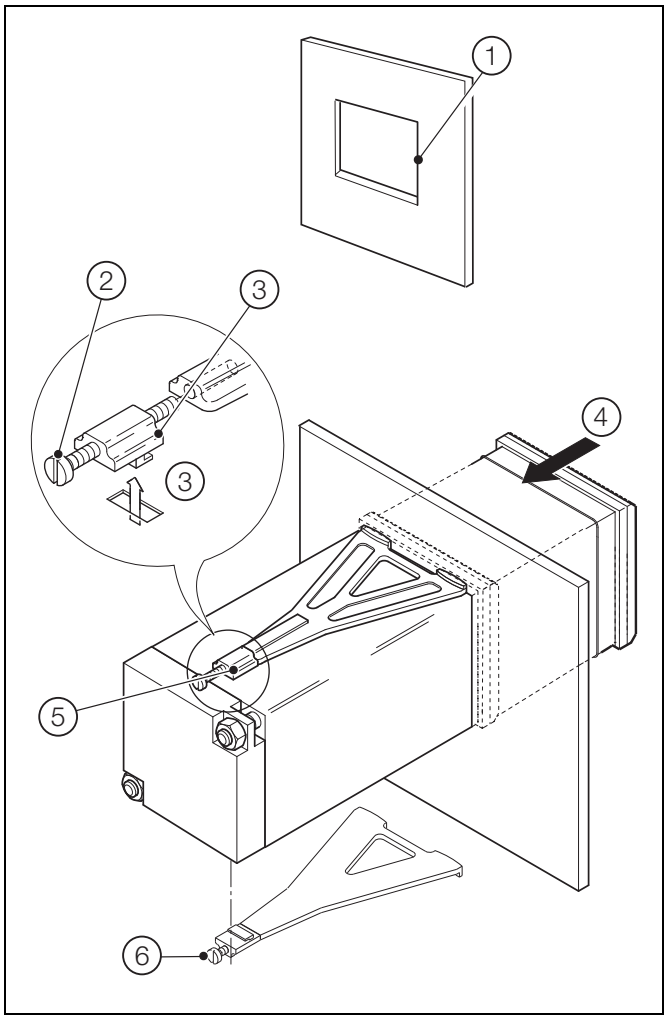

Fig. 3.7 Panel-mounting

3.3 Mounting the Turbidity Sensor

Systems and sensors are shown in Table 2.1 on page 3. The main components of each sensor are identified in Fig. 2.2 on page 4.

Referring to Figs 3.8 or 3.9:

1. Mount the sensor in the orientation shown using the bracket(s) provided, ensuring it is mounted within 5° of its vertical axis.
2. Connect the sample inlet and sample drain tubes.
3. Referring to Fig. 3.10, connect the sample outlet tube.

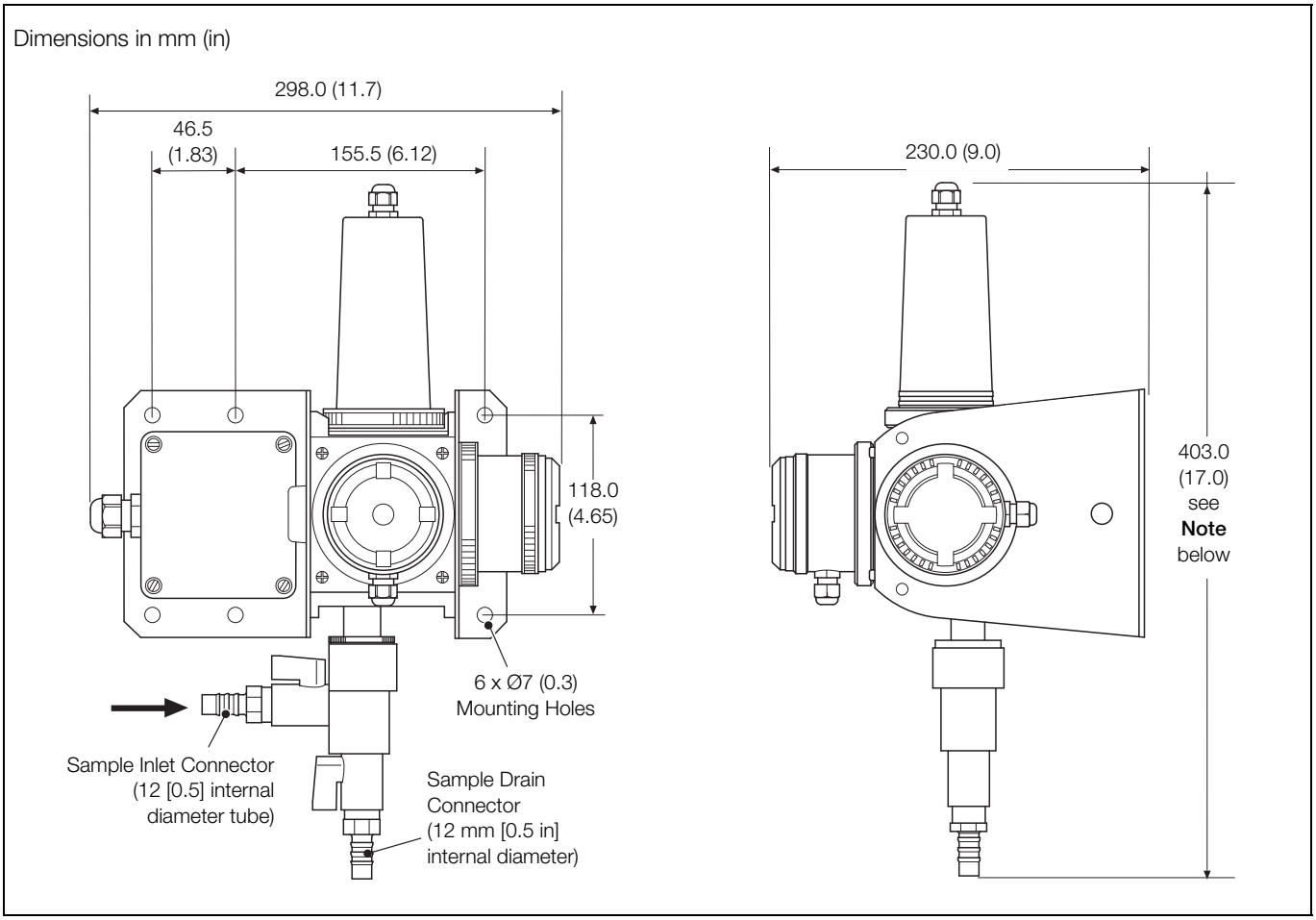

Fig. 3.8 Sensor Dimensions (With Optional Wiper Unit)

Note. Allow a further 30 mm (1.2 in) (approximately) clearance above the wiper unit for the bend in the wiper unit cable.

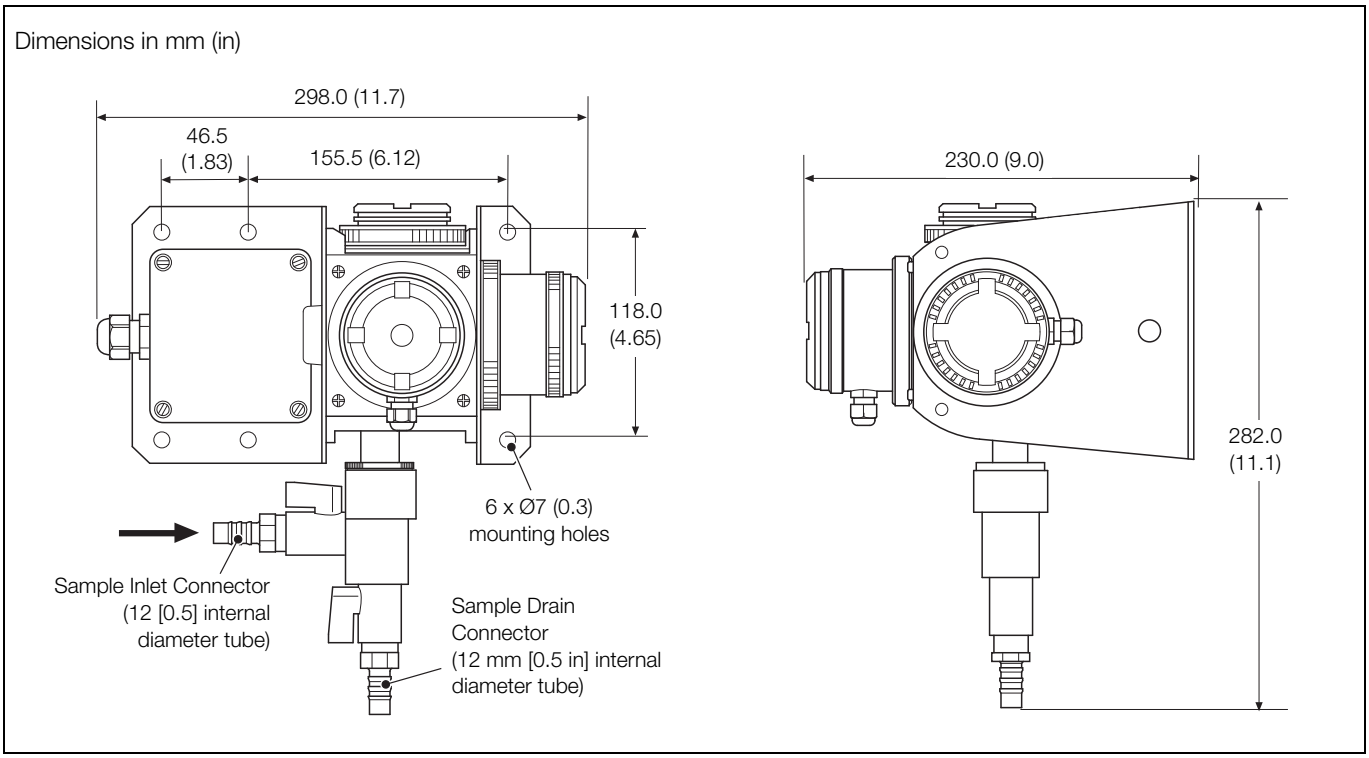

Fig. 3.9 Sensor Dimensions (Without Optional Wiper Unit)

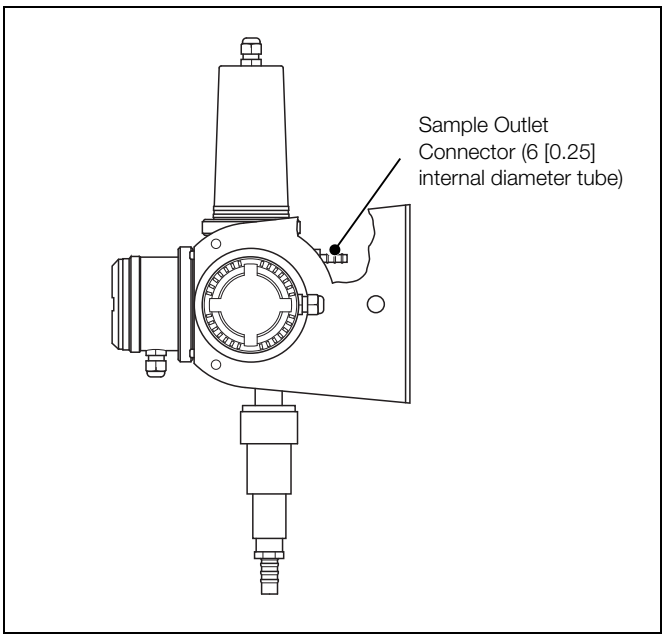

Fig. 3.10 7998 Series – Sample Outlet Connector Location

3.3.1 Sample Flowrate

Set a minimum flowrate of 0.5 l min^{-1} to prevent solids settling in the pipework. Increase the flowrate if necessary but **do not** exceed the maximum flow rate of 1.5 l min^{-1}.

When measuring turbidity, it is important that additional sources of light scattering, such as gas bubbles in the sample, are eliminated. An optional debubbler (part number 7997 500) is available to eliminate gas bubbles – refer to Section 3.4, page 10.

3.4 Installing the Optional De-bubbler

3.4.1 Mounting the De-bubbler

Note. The de-bubbler **MUST** be mounted vertically with the flow upwards.

Dimensions in mm (in)

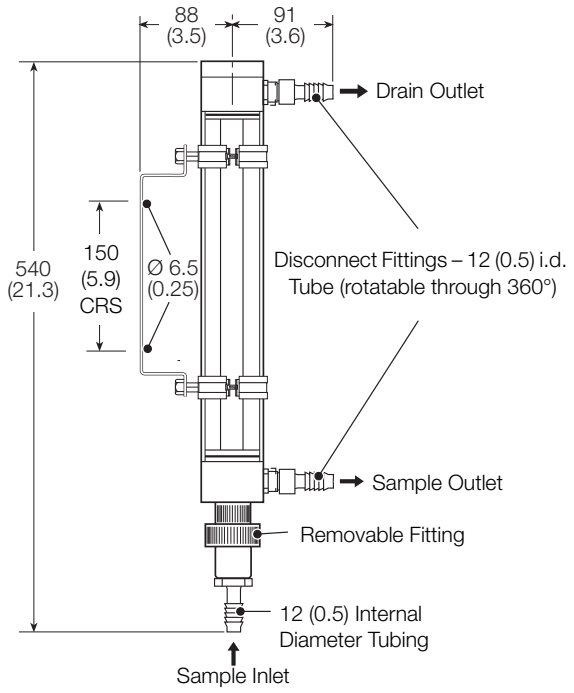

Fig. 3.11 De-Bubbler Mounting Information (Debubbler Part Number 7997 500)

3.4.2 Set Up Procedure for De-bubbler

With a system that includes a de-bubbler, referring to Fig. 3.12:

1. Open the 'sample in' isolating valve (A) such that the overflow from the de-bubbler is at a minimum.
2. Adjust the sample flow through the turbidity system using flow regulating valve (B).

Note. Sample regulating valves together with a flow indicator are recommended to ensure easy maintenance and consistent performance. These devices are not supplied with the 7998 Turbidity systems.

Dimensions in mm (in)

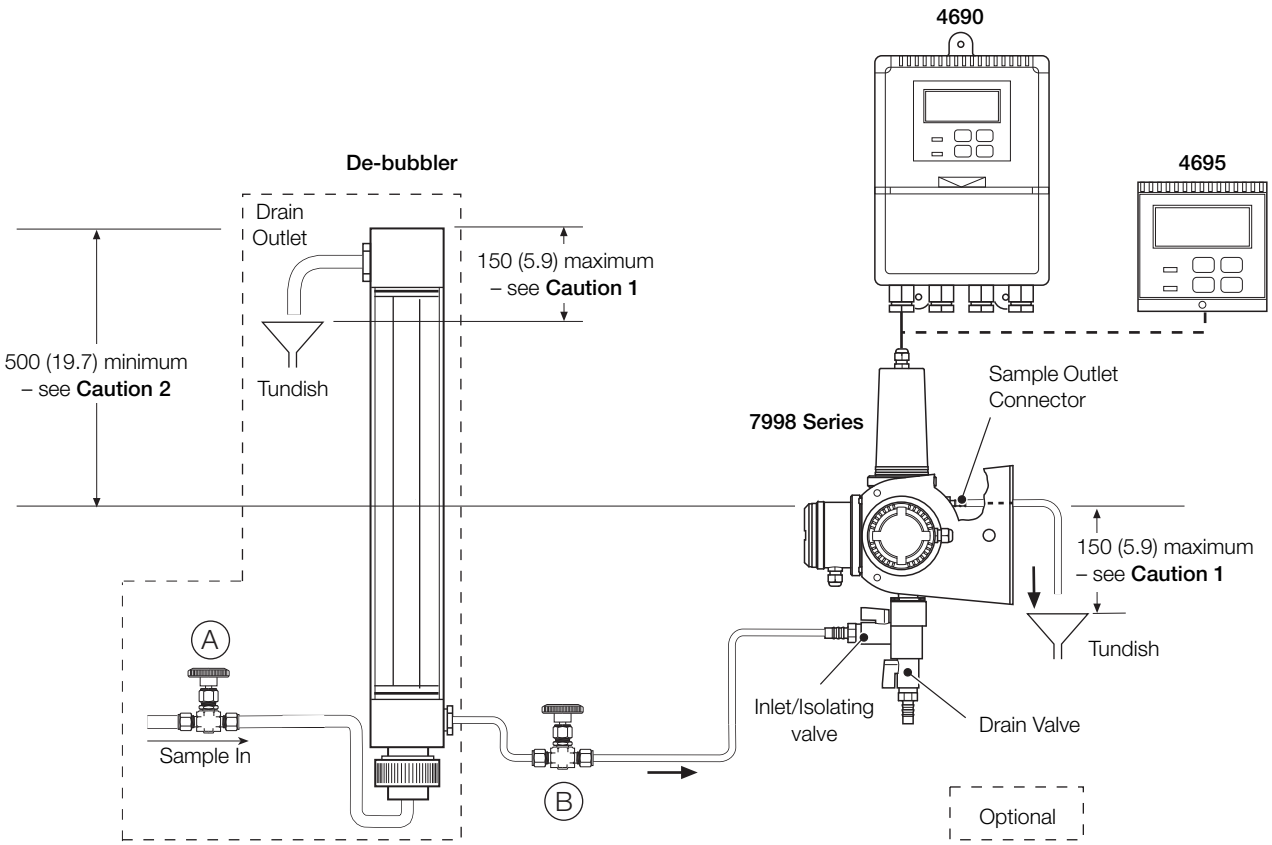

Fig. 3.12 Typical System Installation for 7998 Series Turbidity Systems

Caution.

1. To prevent degassing of the sample and very erratic readings, do not exceed this measurement.
2. This is the minimum installation distance that ensures adequate flowrate through the sensor. Increase this distance as necessary if using long or small-bore tubing.

4 Electrical Connections

Warning.

- Although certain analyzers are fitted with internal fuse protection, a suitably rated external disconnecting device such as a switch or circuit breaker conforming to local safety standards must be fitted to the final installation.
- Before making any connections, ensure that the power supply, any high voltage-operated control circuits and high common-mode voltages are switched off.

4.1 Access to Terminals

4.1.1 Wall- / Pipe-mount Analyzer

Referring to Fig. 4.1:

1. Slide cover down, pull out slightly and slide it off.
2. Release captive screws.
3. Remove protection cover.

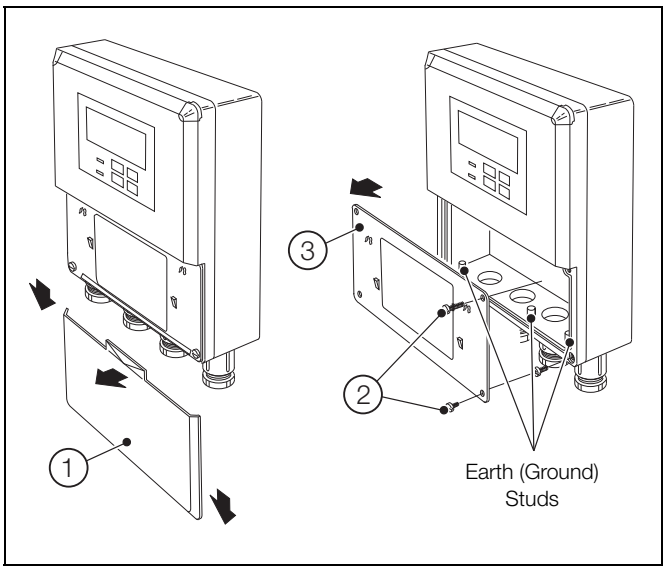

Fig. 4.1 Access to Terminals – Wall- / Pipe-mount Analyzer

4.1.2 Panel-mount Analyzer

Referring to Fig. 4.2:

1. Remove securing nuts.
2. Remove cover.
3. Remove mains terminals protection cover.

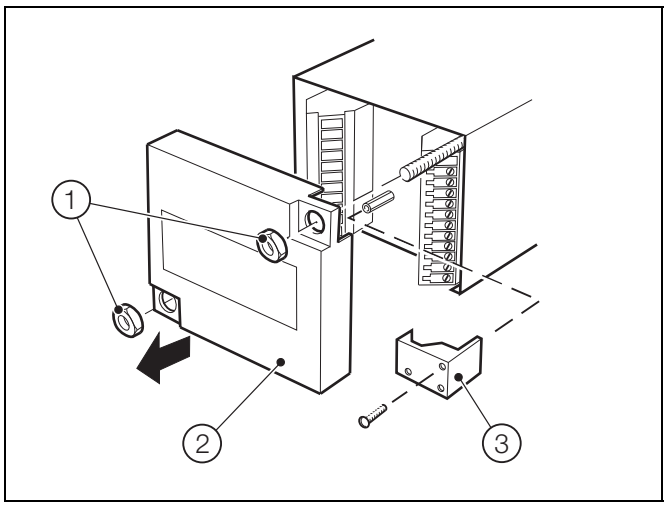

Fig. 4.2 Access to Terminals – Panel-mount Analyzer

4.2 Safety Information

Warning. The power supply earth (ground) **must** be connected to ensure safety to personnel, reduction of the effects of RFI and correct operation of the power supply interference filter.

Note.

- Stud terminal(s) is (are) fitted to the analyzer case for bus-bar earth (ground) connection – see Figs. 4.1, 4.4 and 4.5.
- The cable length between the turbidity sensor and the 4690 / 4695 analyzer is provided as ordered and terminated at the sensor. Shorten or lengthen the cable as required for the installation.
- Always route the signal cable and mains-carrying/relay cables separately, ideally in earthed (grounded) metal conduit.

  Ensure that the cables enter the analyzer through the glands nearest the appropriate screw terminals and are short and direct. Do not tuck excess cable into the terminal compartment.
- Ensure a moisture-tight fit when using cable glands, conduit fittings and blanking plugs/bungs (M20 holes). The M16 glands ready-fitted to wall-mount analyzers accept cable of between 4 and 7 mm diameter.
- The relay contacts are voltage-free and must be connected appropriately in series with the power supply and the alarm/control device that they are to actuate. Ensure that the contact rating is not exceeded. Refer also to Section 4.2.1 for relay contact protection details when the relays are to be used for switching loads.
- Do not exceed the maximum load specification for the selected current retransmission range – refer to Section 11, page 37.

  The retransmission output is isolated therefore the –ve terminal **must** be connected to earth (ground) if connecting to the isolated input of another device.

4.2.1 Relay Contact Protection and Interference Suppression

If the relays are used to switch loads on and off, the relay contacts can become eroded due to arcing. Arcing also generates radio frequency interference (RFI) that can cause analyzer malfunction and incorrect readings. To minimize the effects of RFI, arc suppression components are required; resistor/capacitor networks for AC applications or diodes for DC applications. These components can be connected either across the load or directly across the relay contacts. On 4690 / 4695 analyzers, fit the RFI components to the relay terminal block together with the supply and load wires – see Fig. 4.3.

For AC applications, the value of the resistor/capacitor network depends on the load current and inductance that is switched. Initially, fit a 100R/0.022 µF RC suppressor (part no. B9303) as shown in Fig. 4.3A. If the analyzer malfunctions (incorrect readings) or resets (display shows *88888*) the value of the RC network is too low for suppression – use an alternative value. If the correct value cannot be obtained, contact the manufacturer of the switched device for details on the RC unit required.

For DC applications, fit a diode as shown in Fig. 4.3B. For general applications use an IN5406 type (600 V peak inverse voltage at 3A – part no. B7363).

Note. For reliable switching, the minimum voltage must be greater than 12 V and the minimum current greater than 100 mA.

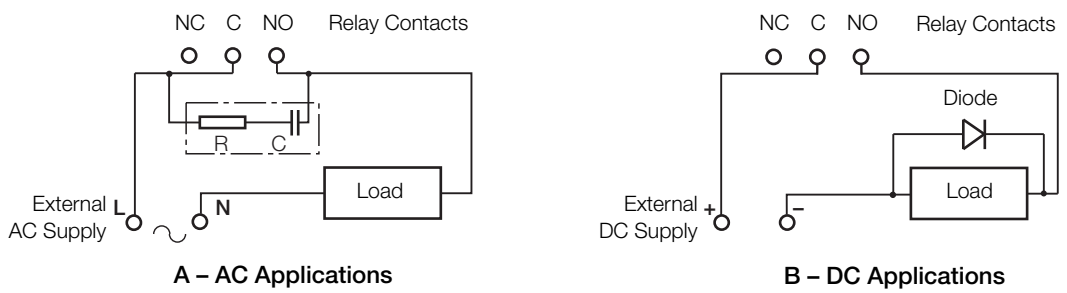

Fig. 4.3 Relay Contact Protection

4.3 Connections

Mounting	Terminal Number						
Wall	1	2	3	4	5	6	7
Panel	12	11	10	9	8	7	6
	Cleaner initiate pulse	+12 V Switched emitter supply	+12 V Cleaner / Receiver supply	Signal input	Cleaner detect signal		0 V common
						Link	

Table 4.1 Analyzer Input Connections

4.3.1 Wall- / Pipe-mount Analyzer Connections

Note.

- Refer to Fig. 4.1, page 12 for access to terminals.
- Slacken terminal screws fully before making connections.

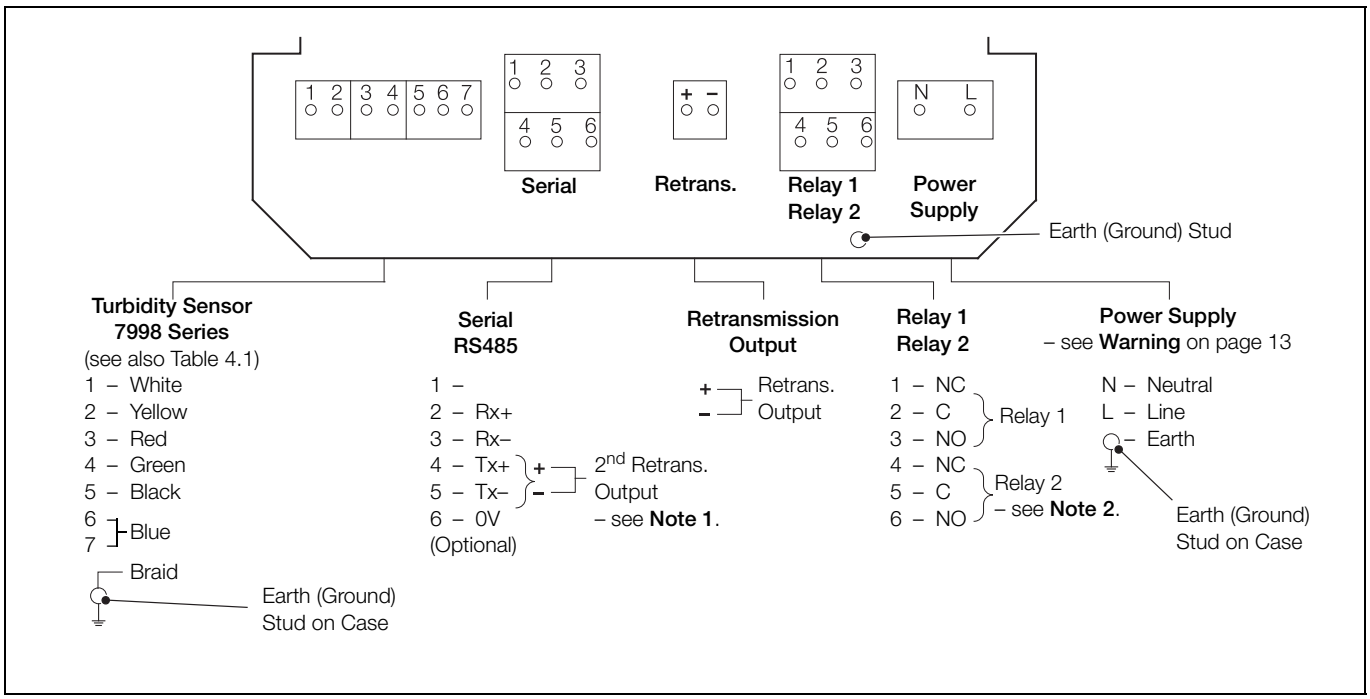

Fig. 4.4 Wall- / Pipe-mount Analyzer Connections

Note.

1. A second retransmission output is available if the RS485 serial communications facility is not used.
2. If **Test Cleaner** is set to YES (see page 28), Relay 2 becomes 'Failed Wiper Alarm' relay.

4.3.2 Panel-mount Analyzer Connections

Note.

- Refer to Fig. 4.2, page 12 for access to terminals.
- Slacken terminal screws fully before making connections.

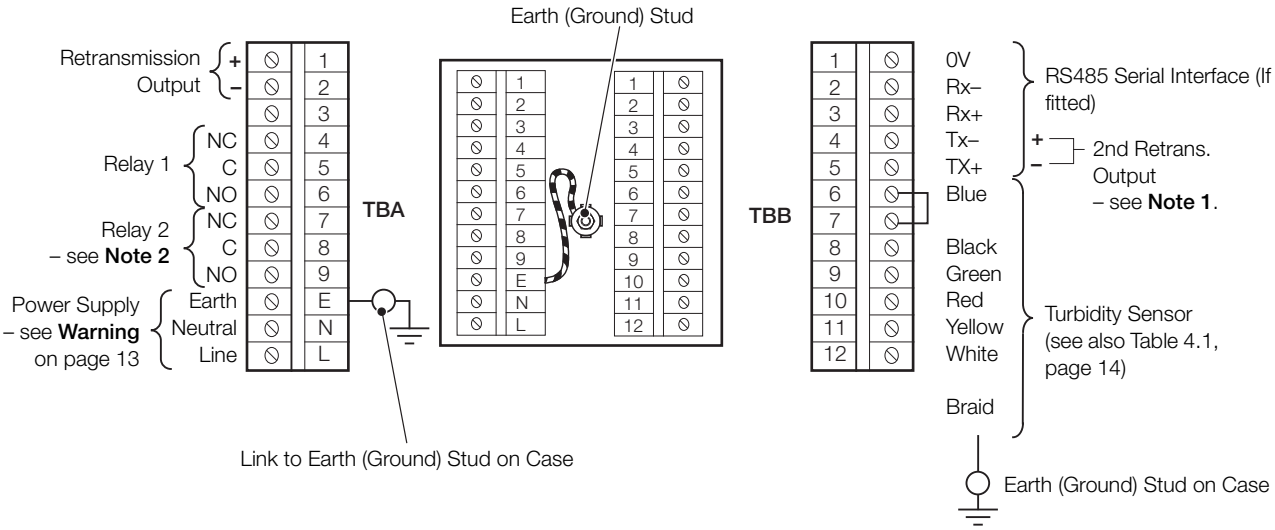

Fig. 4.5 Panel-mount Analyzer Connections

Note.

1. A second retransmission output is available if the RS485 serial communications facility is not used.
2. If **Test Cleaner** is set to YES (see page 28), Relay 2 becomes 'Failed Wiper Alarm' relay.

4.4 Selecting the Mains Voltage

4.4.1 Wall- / Pipe-mount Analyzer

Referring to Fig. 4.6:

1. Slide cover down, pull out slightly and slide it off.
2. Release 4 captive screws.
3. Remove protection cover.
4. Remove 2 screw caps (if fitted).
5. Remove 6 front panel screws.
6. Remove front panel.
7. Set voltage selector switch as required.

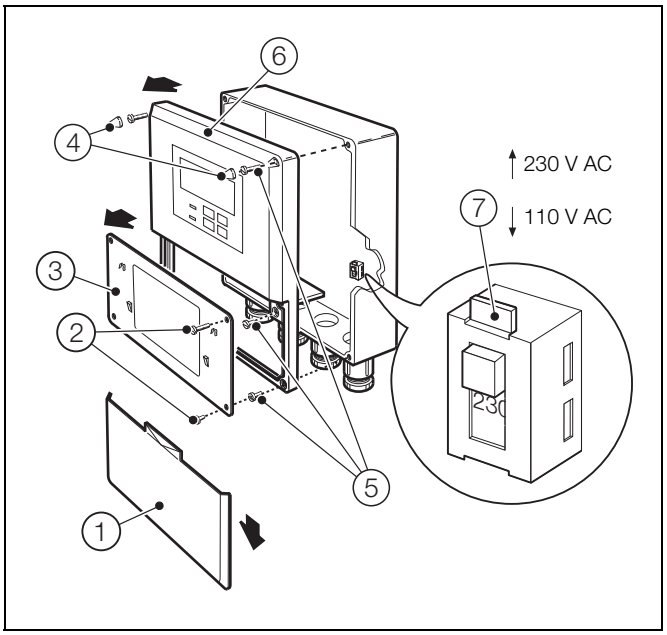

Fig. 4.6 Selecting Mains Voltage – Wall- / Pipe-mount Analyzer

4.4.2 Panel-mount Analyzer

Referring to Fig. 4.7:

1. Release captive screw.
2. Remove analyzer from its case.
3. Set voltage selector switch as required.

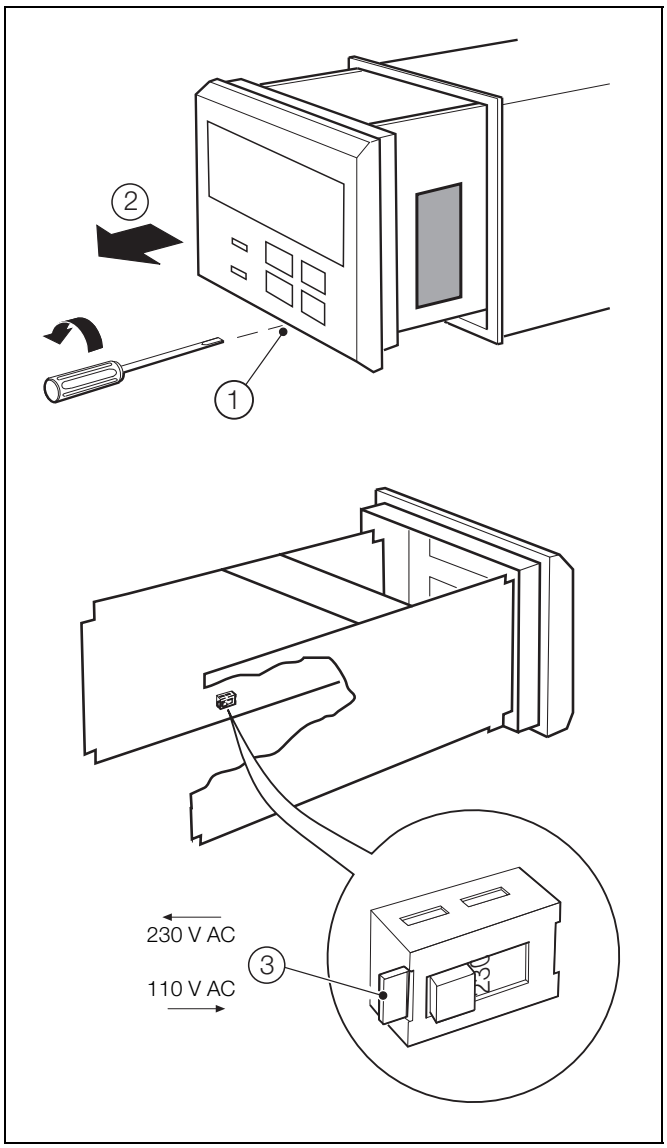

Fig. 4.7 Selecting Mains Voltage – Panel-mount Analyzer

4.5 Turbidity Sensor Connections

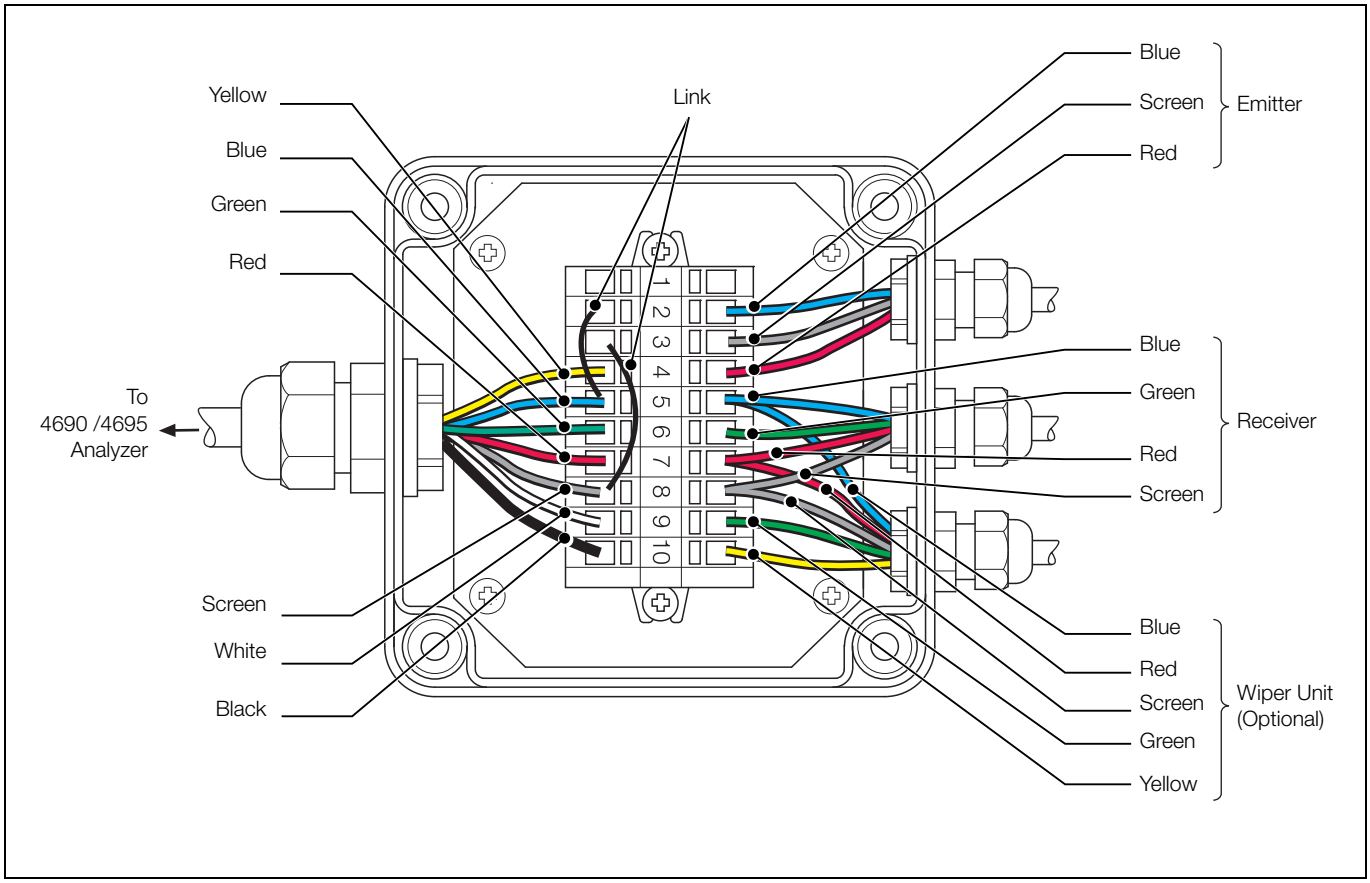

Fig. 4.8 Turbidity Sensor Junction Box Connections

5 Controls and Display

5.1 Display

The display comprises a 5-digit, 7-segment digital upper display line and a 16-character dot-matrix lower display line. The upper display line shows actual values of turbidity, temperature, alarm set points or programmable parameters. The lower display line shows the associated units or programming information.

5.2 Control Familiarization

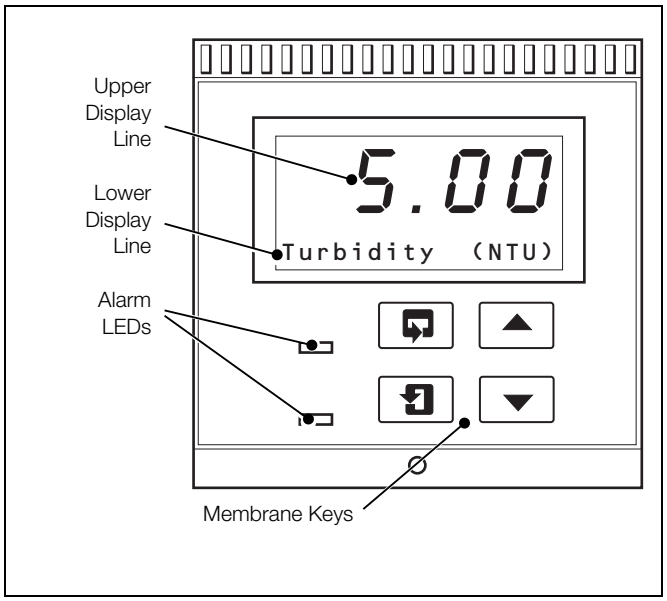

Fig. 5.1 Controls and Display

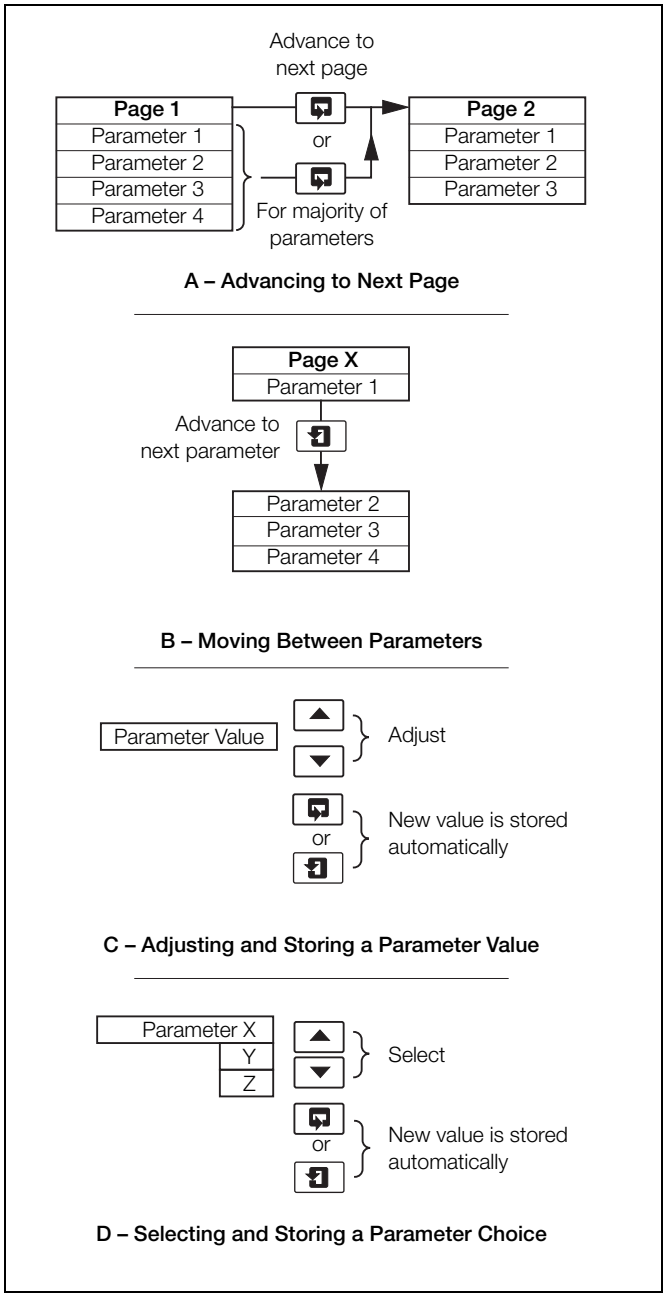

Fig. 5.2 Membrane Key Functions

6 Operation

6.1 Analyzer Start-up

Ensure all electrical connections have been made and switch on the power supply. If the system is being commissioned for the first time, calibration (refer to Section 7, page 20) and parameter programming (refer to Section 8.3, page 27) are required.

6.2 Operation – Turbidity Measurement Mode

Operation in the Turbidity measurement mode comprises an **Operating** page and a **Turbidity Calibration** page. The **Operating** page is a general use page in which parameters are viewed only and cannot be altered. To alter or program a parameter, refer to the programming pages in Section 8. The **Turbidity Calibration** page enables a calibration to be carried out. A 5-digit calibration code is used to prevent unauthorized access to the **Turbidity Calibration** page. The value is preset at 00000 to allow access during commissioning, but should be changed to a unique value, known only to authorized operators, in the **Set Up Outputs** page – see page 30.

6.2.1 Operating Page

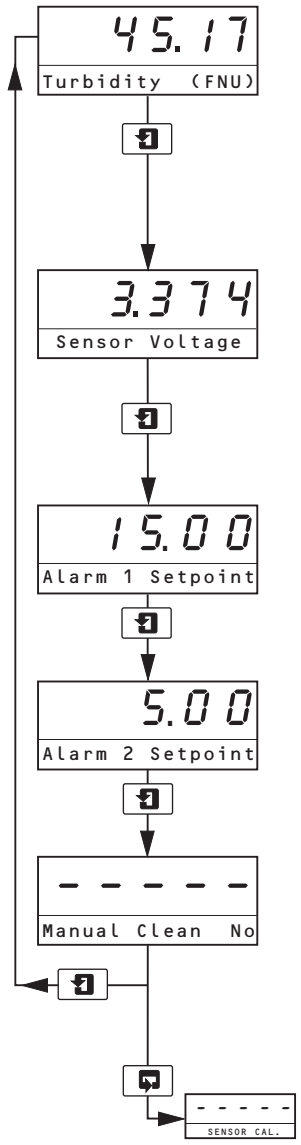

Measured Turbidity (Units)

The measured turbidity value is displayed in the units selected in the **Set Up Parameter** page – see Section 8.3, page 27.

Press ↵ to advance to next page

or

Press ▶ to advance to next parameter.

Sensor Voltage

The sensor voltage displayed is the output from the optical receiver. The optical system (the emitter and the receiver) are configured to produce the 0 to 3 V outputs from zero to full scale, providing an indication of the performance of the optical system.

Alarm 1 Set Point

The set point value and relay / LED action are programmable – refer to Section 8.4, page 29.

Alarm 2 Set Point

The set point value and relay / LED action are programmable – see refer to Section 8.4, page 29.

Manual Clean

Note. Displayed only if the turbidity sensor is fitted with a wiper unit – see Table 2.1, page 3.

Press the ▲ key to initiate a manual clean. `Manual Clean Yes` is displayed for one minute. The automatic clean sequence is then reset and `Manual Clean No` displayed.

Advance to **Calibration** page – see Section 7, page 20.

7 Calibration

A key feature of the 4690 Series Turbidity system is the dry secondary calibration standard. This is designed to simplify routine calibration verification and minimizes the need for chemical standards.

Each dry calibration standard is verified against a primary formazine standard before delivery and the nominal turbidity value is indicated on the label.

For regulatory monitoring, use the secondary calibration standard for monthly calibration verification and monitor it for deterioration periodically using a primary standard.

Definitions

- **Primary Standards**

  Turbidity standards that are traceable and equivalent to the reference turbidity standard, within statistical errors. Formazine is the most commonly acceptable form of primary standard. The other is a commercially manufactured liquid suspension of Styrene divinylbenzene polymer beads (SDB). Primary standards are used to calibrate a turbidity analyzer directly or to calibrate a secondary standard.

- **Secondary Standards**

  Standards that the manufacturer (or an independent testing organization) has certified give analyzer calibration results equivalent (within certain limits) to the results obtained when the analyzer is calibrated with a primary standard.

- **Calibration**

  A procedure that checks or adjusts an analyzer's accuracy by comparison with a defined standard or reference.

- **Calibration Verification**

  A procedure used to check whether or not the calibration of the analyzer is within certain limits.

7.1 Care and Maintenance of Secondary Standards

ABB's secondary standards may be used repeatedly but must be monitored for deterioration.

All secondary standards can change gradually with time. Deterioration can be detected by measuring the turbidity value of the secondary standard after calibration of the analyzer with a primary calibration standard.

It is recommended that secondary standards are rechecked against a primary standard on the analyzer they are intended to be used with every 3 months.

If comparison with a primary standard shows that the turbidity value of the secondary standard has changed the secondary standard can be assigned a new turbidity value for use in future calibration verification.

Included with each sensor is a calibration record card kit for recording the value of the secondary standard compared to the primary calibration data for each individual analyzer with which the secondary standard is used.

Additional calibration record card kits can be purchased from ABB (part no. 7998190 for pack of 3).

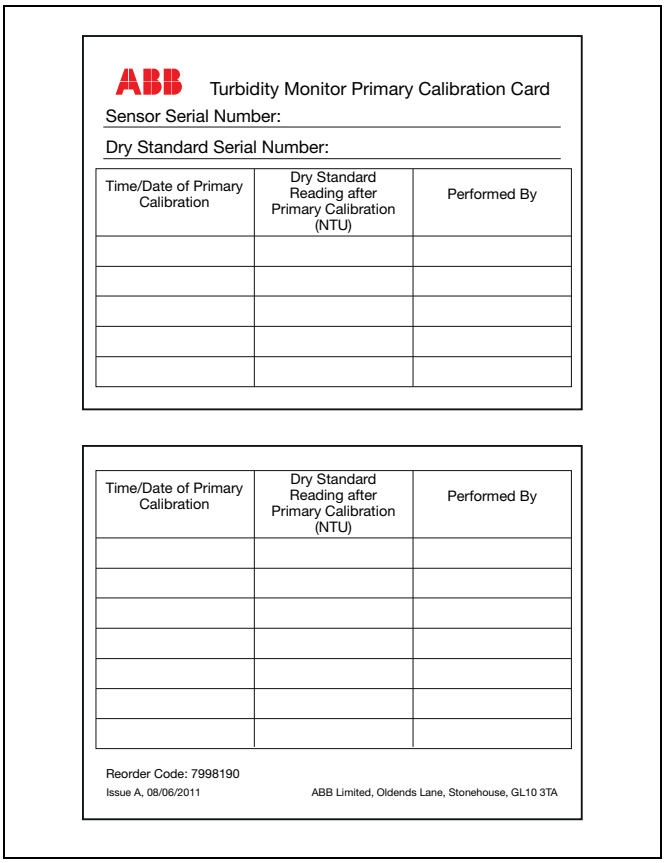
ABB Turbidity Monitor Primary Calibration Card

Sensor Serial Number:

Dry Standard Serial Number:

Time/Date of Primary Calibration	Dry Standard Reading after Primary Calibration (NTU)	Performed By

Time/Date of Primary Calibration	Dry Standard Reading after Primary Calibration (NTU)	Performed By

Reorder Code: 7998190

Issue A, 08/06/2011

ABB Limited, Oldends Lane, Stonehouse, GL10 3TA

Fig. 7.1 Example of Calibration Record Card

To minimize deterioration of the secondary standard:

- Carefully wipe off any residual moisture after use.
- Clean the prism with lint-free cloth.
- Avoid direct contact with the dry standard rod – fingerprints on the surface may alter its stated value.
- Store in the container provided when not in use and keep in a dry place.

7.2 Performing a Calibration Verification with a Secondary Standard

To check the calibration:

1. Close the isolating valve installed upstream of the sensor.
2. Close the sensor inlet valve and open the drain valve. Allow the sensor to drain.
3. Carefully remove the wiper unit (7998 001, 002, 011 and 012) or the wiper plug (7998 006, 007, 016 and 017) to aid complete drainage of the system. When the system is empty, close the drain valve.

   Caution. When removing the wiper unit **do not** put excessive leverage on the wiper as there is a risk of bending the wiper arm out of 90 °. On removal of wiper, check wiper arm has not been bent.

4. Thoroughly dry the flow chamber internally using clean tissue.
5. Thoroughly clean and dry the emitter and receiver lenses using clean tissue.

   Note. If condensation forms on the emitter and receiver lenses, leave the sensor open to enable the lenses to reach ambient temperature before attempting calibration.

6. Insert the dry calibration standard with the zero NTU indication (see Figs 7.2 or 7.3) facing the optical receiver, ensuring the locating lug engages correctly – see Fig. 7.4.

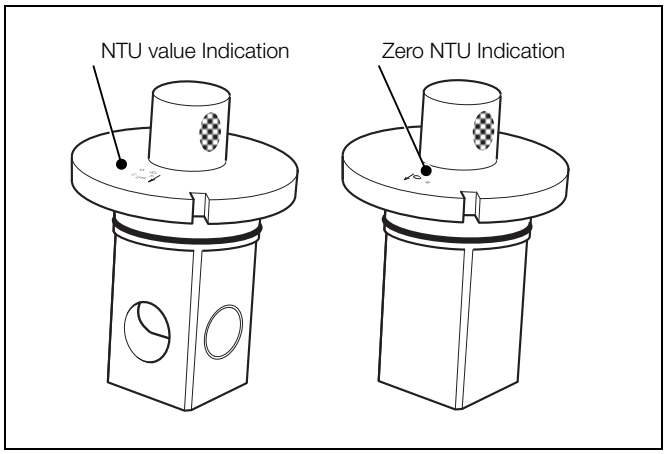

Fig. 7.2 Dry Calibration Standard for Low Range Sensors

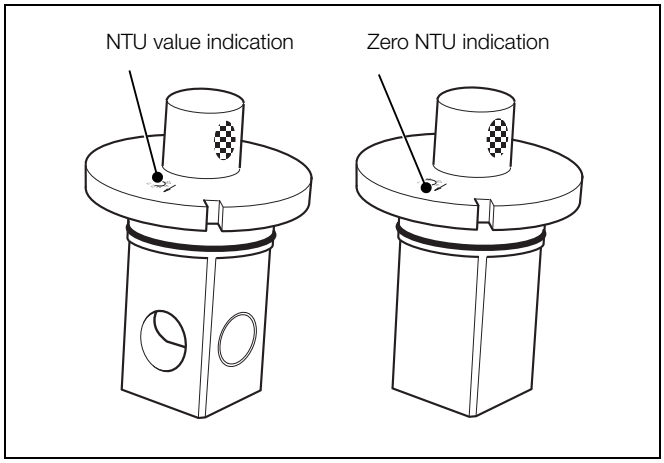

Fig. 7.3 Dry Calibration Standard for High Range Sensors

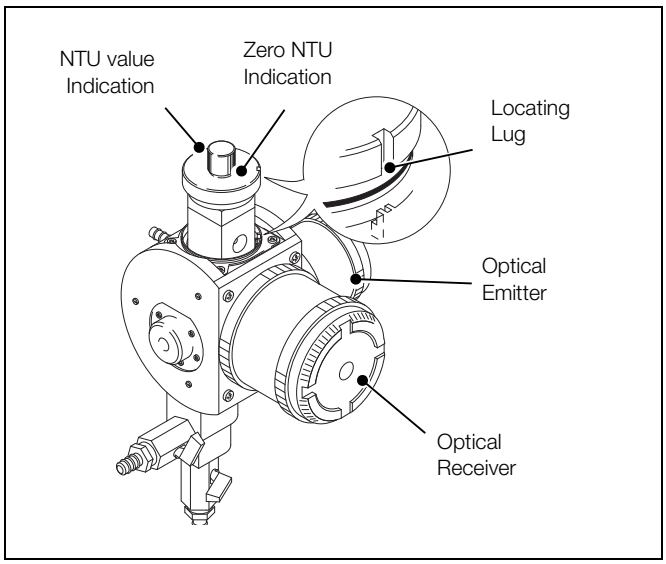

Fig. 7.4 Inserting Dry Standard

7. Note the reading on the display.

8. Remove the dry standard, rotate it through 180° and refit it, ensuring that the NTU value indication (see Figs 7.2 or 7.3) faces the receiver and the locating lug engages correctly – see Fig. 7.4.
9. Note the reading on the display.
10. If the readings noted at steps 7 and 9 exceed ±5 % of dry standard value, repeat the procedure from step 4. If readings are still outside this range, calibrate the sensor.
11. Remove the dry standard and place it in its storage container.
12. Refit the wiper unit (7998 011 and 012) or wiper plug (7998 016 and 017).
13. Open the inlet valve and ensure that the flow through the sensor is 0.5 to 1.5 l min^{-1}

7.3 Performing a Calibration with a Primary Standard

Note. Before performing a wet standard calibration, ensure a stock formazine solution is available. If a stock solution is not available, 24 hours must elapse before a freshly-prepared solution can be used.

To prepare the sensor assembly for wet (Formazine) calibration:

1. Close the isolating valve installed upstream of the sensor.
2. Close the sensor inlet valve and open the drain valve. Allow the sensor to drain.
3. Carefully remove the wiper unit (7998 011 and 012) or the wiper plug (7998 016 and 017) to aid complete drainage of the system. When the system is empty, close the drain valve.

   Caution. When removing the wiper unit **do not** put excessive leverage on the wiper as there is a risk of bending the wiper arm out of 90 °. On removal of wiper, check wiper arm has not been bent.

4. Thoroughly dry the flow chamber internally using clean tissue.
5. Thoroughly clean and dry the emitter and receiver lenses using clean tissue.

   Note. If condensation forms on the emitter and receiver lenses, leave the sensor open to enable the lenses to reach ambient temperature before attempting calibration.

6. Insert the dry calibration standard with the zero NTU indication (see Figs 7.5 or 7.6, page 23) facing the optical receiver, ensuring the locating lug engages correctly – see Fig. 7.7.

   Note. Do not touch the light reflecting parts of the standard.

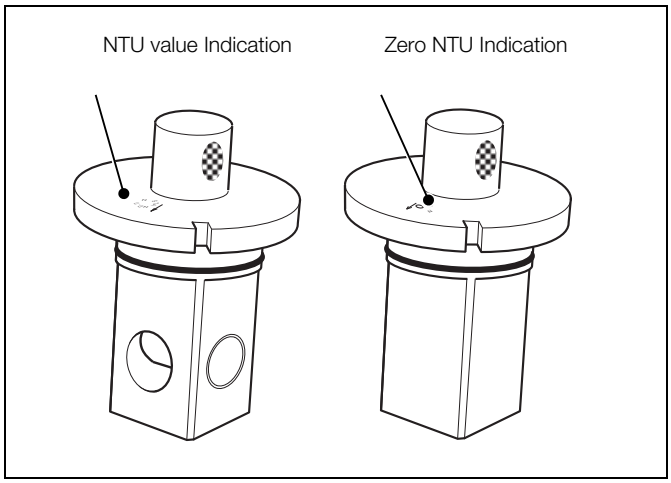

Fig. 7.5 Dry Calibration Standard for Low Range Sensors

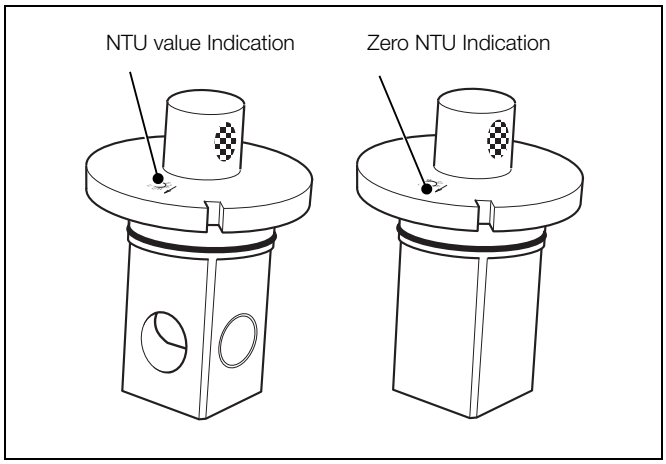

Fig. 7.6 Dry Calibration Standard for High Range Sensors

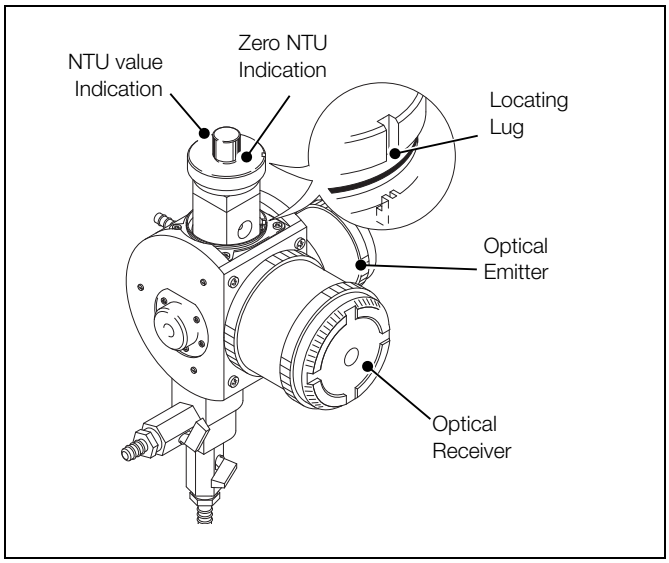

Fig. 7.7 Inserting Dry Standard

7. Calibrate the sensor as follows:

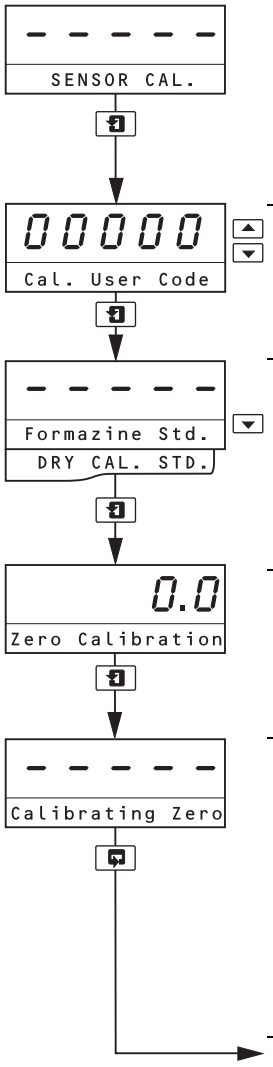

Sensor Calibration

Press ↵ to advance to next page

or

Press ↵ to advance to next parameter.

Calibration Security Code

Enter the required calibration code number, between 00000 and 19999. If an incorrect value is entered, access to calibration is prevented and the `SENSOR CAL.` page is displayed.

Dry Standard Calibration

Press the ▼ key to select `Formazine Std.`

Zero Calibration

Press the ↵ key. The display changes to `Calibrating Zero`.

Calibrating Zero

After approximately one minute, the display changes to `Fill Span Sol.` if zero calibration is successful.

If `Cal Fail` is displayed, remove the dry standard and ensure the emitter and receiver lenses are clean and dry. Refit the dry standard, ensuring it is fitted correctly (see step 6, page 22) and repeat the procedure.

Note. Do not touch the light reflecting parts of the standard.

Continued on next page.

Continued from previous page

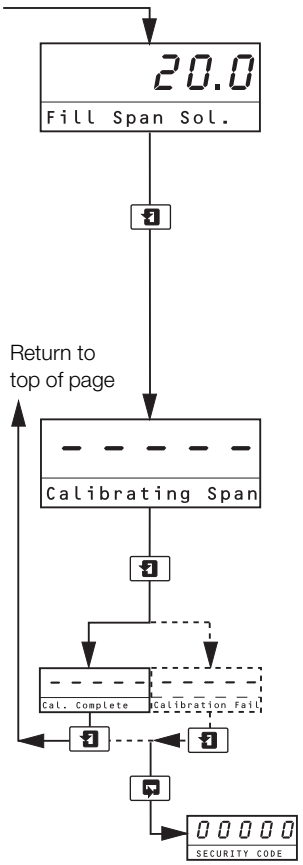

Fill Span Solution

1. Remove the dry standard and place it in its storage container.

   Note. Do not touch the light reflecting parts of the standard.

2. Fill the flow chamber with the formazine span solution and refit the wiper unit or wiper plug.
3. Using the ▲ and ▼ keys, set the display to the NTU value of the formazine span solution.
4. Press the ↵ key. The display changes to `Calibrating Span`.

   Note. If span calibration is not required, press the ↵ key again to advance to `Cal. Complete`.

Calibrating Span

After approximately one minute, the display changes to `Cal. Complete` if calibration is successful.

1. Remove the wiper unit or wiper plug.
2. Drain the flow chamber, ensuring all the formazine span solution is removed.
3. Refit the wiper unit or wiper plug and open the inlet valve.

If `Cal Fail` is displayed, drain the flow chamber, remove the wiper unit or wiper plug and clean the emitter and receiver lenses. Repeat the calibration procedure ensuring that an in-date or fresh formazine solution is used and that the **Fill Span Solution** parameter is set to the NTU value of the formazine span solution.

Advance to **Access to Configuration** pages – see Section 8.1, page 26.

8 Configuration and Electrical Calibration

8.1 Access to Configuration Pages

A 5-digit security code is used to prevent unauthorized access to the configuration pages.

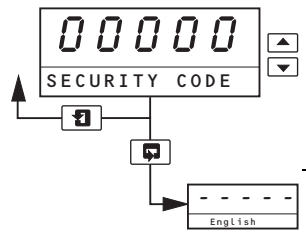

Security Code

Enter the required code number, between 00000 and 19999, to gain access to the configuration pages. If an incorrect value is entered, access to subsequent configuration pages is prevented and the Operating Page is displayed.

Advance to **Language** page – see Section 8.2 below.

8.2 Language Page

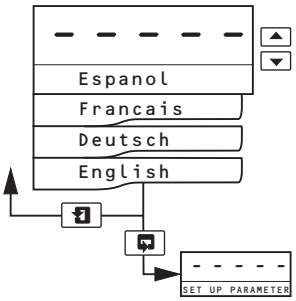

Language

Using the ▲ and ▼ keys, select the required language.

Advance to **Set Up Parameter** page – see Section 8.3, page 27.

8.3 Set Up Parameter Page

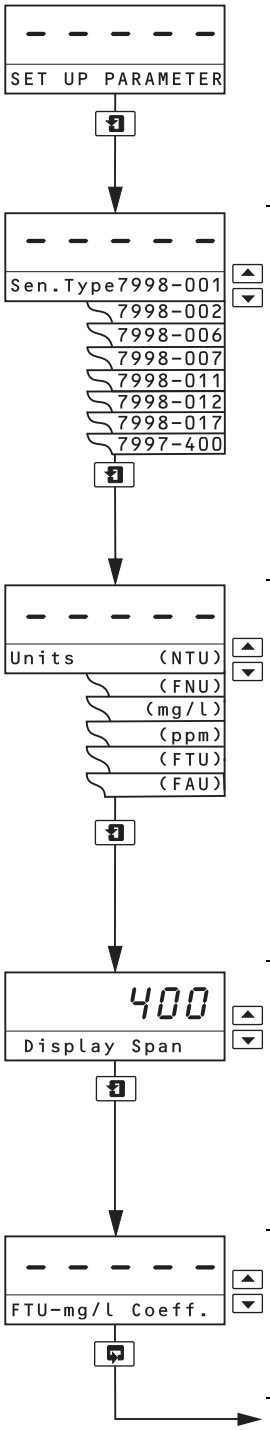

Set Up Parameter

Press ↵ to advance to next page

or

Press ▶ to advance to next parameter.

Sensor Type

Using the ▲ and ▼ keys, select the required sensor:

7998-001
7998–002
7998–006
7998–007
7998–011
7998–012
7998–016
7998–017

7998–400 (Refer to separate manual IM/4670)

Units

Using the ▲ and ▼ keys, select the required measurement units:

NTU (Nephelometry Units)

FNU (Formazine Nephelometry Units)

mg/l (milligrams suspended solids per litre) – 7998-002/007/012/017 sensors only

ppm (parts per million suspended solids) – 7998-002/007/012/017 sensors only

Note. FTU and FAU units are applicable only to 7997–400 series sensors – refer to IM/4670

Display Span

Using the ▲ and ▼ keys, select the required span value.

The minimum and maximum values that can be selected are determined by the **Sensor Type** selected above. The display flashes at turbidity values higher than the selected span value but indicates correctly up to the range of the sensor – see Table 2.1 on page 3.

The display span also sets the correct output span. Alarm values cannot be set outside this range.

Correction Factor

Note. Displayed only if **Units** is set to mg/l or ppm

Using the ▲ and ▼ keys, select the required correction factor to between 0.2 and 5.0.

Continued on next page.

Continued from previous page

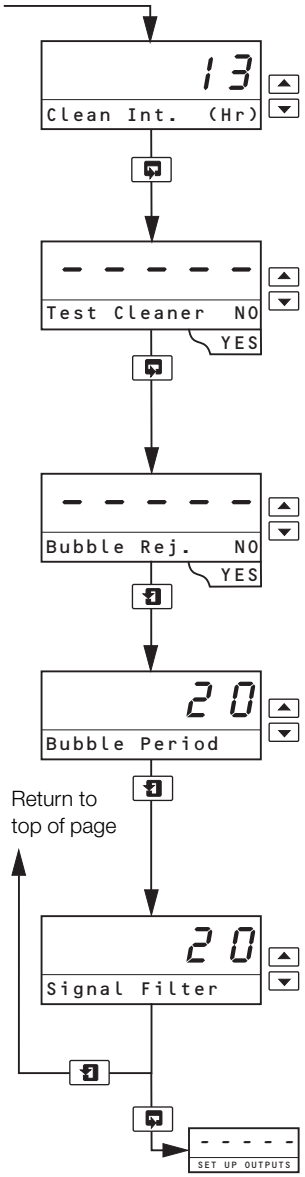

Cleaning Interval

Note. Displayed only if **Sensor Type** is set to 7998-001, 7998-002, 7998-011 or 7998-012

Using the ▲ and ▼ keys, select the cleaning interval required. Values available are: 15 mins, 30 mins, 45 mins, 1 hr, then 1 hour increments to a maximum of 24 hours.

Test Cleaner

Note. Displayed only if **Sensor Type** is set to 7998-001, 7998-002, 7998-011 or 7998-012

Select YES to activate the wiper unit diagnostics function and enable visual indication of wiper unit function.

Select No to deactivate the wiper unit diagnostics function.

Bubble Rejection

Use in applications where degassing of the sample takes place.

When set to YES, the analyzer ignores short duration spikes in the turbidity reading caused by the formation of small bubbles in the flowcell due to degassing.

Bubble Period

Note. Displayed only if **Bubble Rej.** is set to YES

Using the ▲ and ▼ keys, adjust the value to between 2 and 60 seconds until short duration spikes are no longer seen on the display.

Note. A value of 20 seconds is normally sufficient for most applications.

Signal Filter

Use in applications where the turbidity readings are noisy.

Using the ▲ and ▼ keys, adjust the value to between 4 and 180 seconds.

Note. If **Bubble Rej.** is set to YES, set a value of 4 seconds for optimum performance.

Advance to **Set Up Outputs** page – see Section 8.4, page 29.

8.4 Set Up Outputs Page

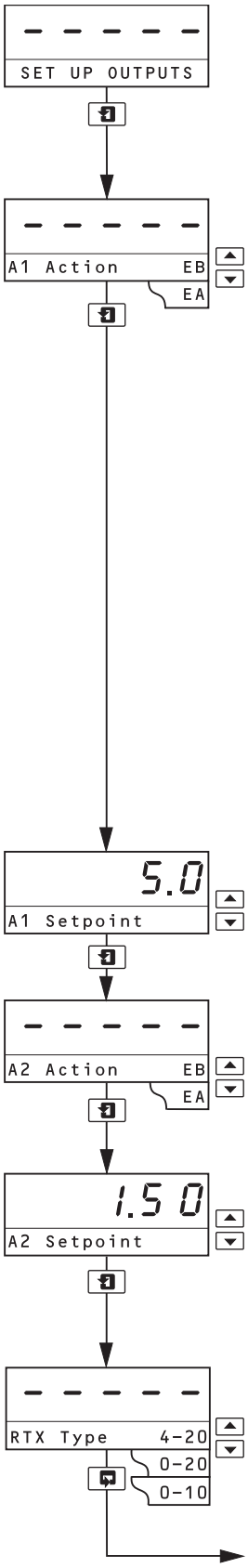

Set Up Outputs

Press ⏎ to advance to next page

or

Press ▶ to advance to next parameter.

Alarm 1 Action

For 'Fail-safe' alarm operation the relay's alarm state must be the same as the power-down state, (the relay is de-energized).

For high alarm operation the relay must be Energized Below (EB) the alarm set point.

For low alarm operation the relay must be Energized Above (EA) the alarm set point.

The alarm LEDs are lit in the alarm condition.

Select the required alarm 1 action from the following table:

Alarm Action	LED Condition for Input Above Set Point	LED Condition for Input Below Set Point	Relay Condition for Input Above Set Point	Relay Condition for Input Below Set Point
EB	ON	OFF	De-energized	Energized
EA	OFF	ON	Energized	De-energized

The set point band is defined as the actual value of the set point plus or minus the hysteresis value. The hysteresis value is ±1 % of the set points. Alarm action occurs if the input value is above or below the set point band. If the input moves within the set point band the last alarm action is maintained.

Alarm 1 Set Point

Using the ▲ and ▼ keys, set the alarm 1 set point to any value within the selected display span – see **Display Span** on page 27. The set point value is subject to hysteresis as detailed above.

Alarm 2 Action

Note. Displayed only if **Test Cleaner** is not set to YES – see **Test Cleaner** on page 28 (set automatically to Wiper Unit Failed Alarm if **Test Cleaner** is set to YES).

Repeat as for **Alarm 1 Action** above.

Alarm 2 Set Point

Note. Displayed only if **Test Cleaner** is not set to YES – see **Test Cleaner** on page 28 (set automatically to Wiper Unit Failed Alarm if **Test Cleaner** is set to YES).

Repeat as for **Alarm 1 Set Point** above.

Retransmission Type

Using the ▲ and ▼ keys, select the retransmission current output range required, from 0 to 10, 0 to 20 or 4 to 20 mA.

The current output range is assigned to the selected display span – see **Display Span** on page 27.

Continued on next page.

Continued from previous page

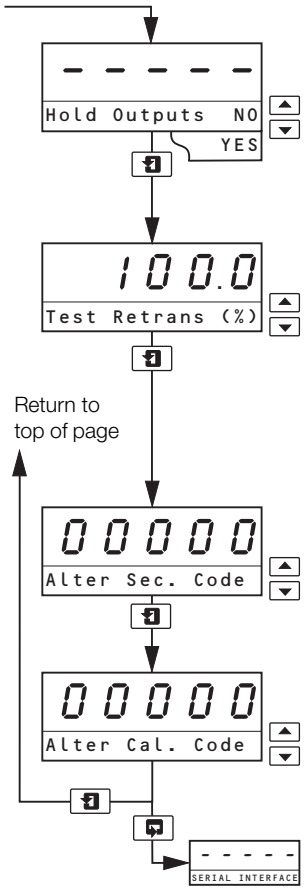

Hold Outputs during Calibration

Select YES to hold the retransmission and alarm outputs to prevent inadvertent operation during calibration.

Test Retransmission Output

The analyzer transmits automatically a test signal of 0, 25, 50, 75 or 100 % of the retransmission range selected on page 29. The % test signal selected is shown on the upper display.

Example – for a selected range of 0 to 20 mA and 50 % retransmission test signal, 10 mA is transmitted.

Select the required retransmission test signal.

Alter Configuration Security Code

Set the security code to a value between 00000 and 19999.

Alter Calibration Security Code

Set the security code to a value between 00000 and 19999.

Advance to **Set Up Serial Interface** page.

8.5 Set Up Serial Interface Page

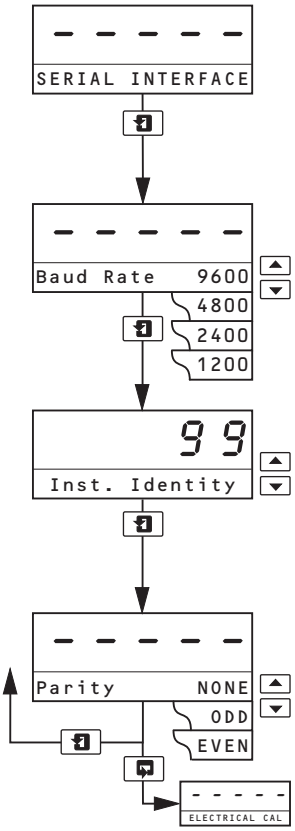

Serial Interface

Press ↵ to advance to next page

or

Press ⇥ to advance to next parameter.

Baud Rate

Using the ▲ and ▼ keys, select the baud rate required from 1200, 2400, 4800 or 9600 baud.

Instrument Identity

Using the ▲ and ▼ keys, select a value between 1 and 99 to identify the analyzer on the network.

Parity

Using the ▲ and ▼ keys, select the parity required, None, Odd or Even.

Advance to **Electrical Calibration** page – see Section 8.6.3, page 33.

8.6 Electrical Calibration

Caution. The analyzer is calibrated by the Company prior to despatch and an electrical calibration should not be necessary. If an electrical calibration is carried out, suitably calibrated and verifiable test equipment must be used.

8.6.1 Equipment Required

1. Millivolt source: 0 to 4000 mV.
2. Digital milliammeter (current output measurement): 0 to 20 mA.

8.6.2 Preparation

1. Isolate the analyzer and turbidity sensor from the power supply and disconnect the sensor and current output from the analyzer's terminal block – see Fig. 4.4, page 14 (wall-/pipe-mount analyzer) or Fig. 4.5, page 15 (panel-mount analyzer).
2. **Wall- / Pipe-mount Analyzer**
   a. Connect the millivolt source '+' and '–' to terminals 4 and 7 respectively.
   b. Connect the milliammeter to the retransmission output terminals.
   c. Ensure the earth on the millivolt source is connected to the earth stud.

   Panel-mount Analyzer
   a. Connect the millivolt source '+' and '-' to terminals 9 and 6 respectively.
   b. Connect the milliammeter to the retransmission output terminals.
   c. Ensure the earth on the millivolt source is connected to the earth stud.
3. Switch on the supply and allow ten minutes for the circuits to stabilize.
4. Select **ELECTRICAL CAL** page and proceed as in Section 8.6.3, following.

8.6.3 Electrical Calibration Page

In this section the actual values denoted by '**xxxxx**' are unimportant and are used only to determine display reading stability when carrying out the electrical calibration procedure.

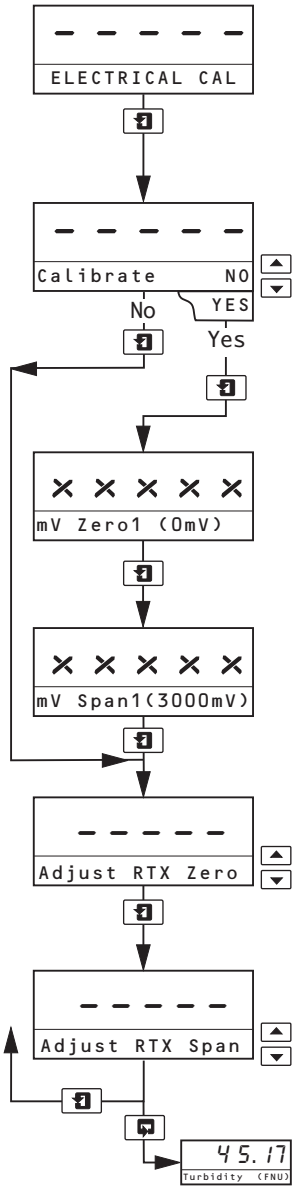

Electrical Calibration

Press ↵ to advance to next page

or

Press ↵ to return to the **Operating** page – see Section 6.2.1, page 19.

Calibrate

Select **YES** to access the electrical calibration sequence.

Select **NO** to advance to **Adjust RTX Zero**.

mV Zero1 (0mV)

Set the millivolt source to 0 mV and allow the analyzer display to stabilize.

mV Span1 (3000mV)

Set the millivolt source to 3000 mV and allow the analyzer display to stabilize.

Adjust Retransmission Zero

Set the milliammeter reading to 4 mA.

Adjust Retransmission Span

Set the milliammeter reading to 20 mA.

Note. The retransmission range selected in the **Set Up Outputs** page does not affect the reading.

Return to the **Operating** page – see Section 6.2.1, page 19.

9 Maintenance

The servicing schedule in Table 9.1 is a guide only. Because the turbidity systems are designed for a wide range of applications, where the nature of the sample can vary considerably, it may be necessary to amend the schedule to suit the particular installation and sample conditions.

Task	Recommended Frequency
Wiper blade replacement	Quarterly
Light source (EPA 180.1) replacement	Annually
LED light source (ISO 7027) replacement kit	Every 5 years

Table 9.1 Suggested Maintenance Schedule

9.1 Sensor Cleaning

9.1.1 Sensors Without Wiper Unit

These sensors are normally used on clean water samples and, under normal conditions, may require only manual monthly cleaning of the flow chamber. However, if a high turbidity breakthrough occurs, clean the flow chamber immediately to ensure accurate readings.

9.1.2 Sensors With Wiper Unit

The required automatic cleaning frequency of the flow chamber and optical windows of the sensors can be determined only by plant experience. It is recommended that checks are made at appropriate intervals.

10 Fault Finding

10.1 Error Messages

If erroneous or unexpected results are obtained, the fault may be indicated by an error message – see Table 10.1. The majority of problems are overcome by thorough cleaning of the flowcell optical windows and / or a sensor calibration.

Error Message	Description and Remedy
`Cal Fail`	Indicates that the expected step change between a zero and span calibration was not produced by the sensor (zero response from the sensor). 1. Repeat calibration. 2. If using a dry calibration standard, ensure that the optical windows on the dry standard are clean and dry. 3. If using solutions: Check that the flowcell has been thoroughly cleaned and rinse well between solutions Check both zero and formazine solutions 4. Check electrical connections to sensor. 5. Using a suitable voltmeter, check the sensor 12 V supplies, both at the analyzer terminals and sensor junction box – see Table 4.1 on page 14 for details. 6. Check the analyzer's response to an electrical input by injecting 0 and 3 V into the following terminals and noting the reading displayed in **Sensor Voltage** in the **Operating** page (see Section 6.2.1, page 19): Wall- / pipe-mount–ve to terminal 7 +ve to terminal 4 Panel-mount –ve to terminal 6 +ve to terminal 9 Small errors in displayed voltage can be removed by electrical calibration. Large errors indicate an electronic fault.
`Cleaner Fail`	Indicates that the analyzer was unable to detect the correct operation of the wiper unit; either the wiper unit did not rotate or failed to park in the correct position. 1. Check the electrical connections to the sensor. 2. Using a suitable voltmeter, check the sensor 12 V supplies, both at the analyzer terminals and sensor junction box – see Figs 4.4, 4.5 and 4.8 on pages 14, 15 and 17 for connection details. 3. Check operation of the wiper unit by disconnecting the white lead from the analyzer terminal block (Cleaner Initiate signal) and touching it briefly to the 0 V terminal – see Table 4.1 on page 14 for details. This initiates a cleaning cycle, that can be observed when the wiper unit is removed from the flowcell.
`NV Memory Error`	Indicates that the contents of the nonvolatile memory has not been read correctly during power up. To rectify the problem, switch off the power, wait 10 seconds and switch on again. If the problem persists contact the Company.

Table 10.1 Error Messages

10.2 Unstable or Erratic Readings

There are a number of possible causes of unstable or erratic readings. Check for air bubbles in the sample. This may be due to degassing of the sample, caused by either a drop in sample pressure or a rise in temperature. Frequent cleaning of the optical windows helps to prevent the build-up of bubbles. If bubbles are observed it is recommended that the optional de-bubbler unit is installed – see Section 3.4, page 10.

Where the noise level gradually gets worse over a period of time, this usually indicates that solids are building up in the flowcell. Increasing the flowrate through the flowcell may reduce this build up. Ultimately the flowcell needs to be cleaned manually.

10.3 Intermittent Short Term Spikes in Turbidity Readings

This is usually caused by bubbles passing through the light path within the flowcell. The bubbles are a result of degassing. Degassing is not an instantaneous process and it is possible that it is taking place after the sample has gone through the de-bubbler. The bubbles start to form in the sample pipework and the flowcell. As they grow gradually, the bubbles finally release and flow through the light path, causing a spike in the turbidity reading.

The analyzer can be programmed for Bubble Rejection to remove short-term spikes from the readings – see page 28. For optimum operation, operate the wiper unit frequently to prevent bubbles building up on the windows.

11 Specification

Sensor

Range

Low range 0 to 40 NTU
High range 0 to 400 NTU

Measurement principle

90 ° scattered light measurement.
Compliant to ISO 7027

Maximum linearity

Typically <1.0 %

Accuracy[1, 2]

Low range version ±2 % of reading

High range version ±5 % of reading or 0.3 NTU

Repeatability[3]

0 to 200 NTU <1 %

200 to 400 NTU 2 %

Limit of Detection[4]

Low range version: 0.003 NTU

High range version: 0.3 NTU

Response time

T90 < 1 min at 1 l/min^{-1}

Flow rate

0.5 to 1.5 l/min (0.13 to 0.39 gall [US]/min)

Integral wiper cleaning system

Programmable operational frequency every 0.25 hour, 0.5 hour, 0.75 hour or multiples of 1 hour up to 24 hours

Sample operating temperature

0 to 50 °C (32 to 122 °F)

Sample pressure

Up to 3 bar (43.5 psi)

Ambient operating temperature

0 to 50 °C (32 to 122 °F)

Ambient operating humidity

Up to 95 % RH

[1]Maximum measured error across full measurement range (limited by uncertainty in Formazine standards).

[2]Tested in accordance with IEC 61298 Parts 1-4: Edition 2.0 2008-10.

[3]Tested in accordance with MCERTS: Performance Standards and Test Procedures for Continuous Water Monitoring Equipment. Version 3.1: Environment Agency 2010.

[4]Tested in accordance with BS ISO 15839: 2003.

Wetted parts – materials used

Cell body unit

- Black POM (Polyoxymethylene) Copolymer
- Spectrosil 2000 fused silica
- Nitrile (O-ring)
- Epoxy preform (cured) – Uni-forms 5034-00
- Polyamide 6
- Nickel plated brass
- PTFE

Wiper unit

- Black Polycarbonate, 10% Glass Fibre filled – Lexan 500R
- Stainless Steel (SS 316 S13/S11) w/ Chemical Black – MIL-C13924 class 4
- Silicone grease (WRC Approved) – Unisilkon L 250 L
- 2-part Epoxy Adhesive (cured) – Robnor PX800F/NC
- EPDM (ethylene propylene diene Monomer) black

Analyzer

Measured value
5-digit x 7-segment backlit LCD

Information
16-character, single line, dot matrix, backlit LCD

Units of measurement
All models: NTU and FNU
mg/l and ppm for models high range models

Accuracy
±0.2 % of reading, ±1 digit

Linearity
±0.1 % FSD

Auto-clean timing (7998011, 7998012)
Programmable 15 min, 30 min, 45 min or 1 hour up to 24 hours in 1 hour increments

Environmental Data

Operating temperature limits
–20...55 °C (–4...131 °F)

Storage temperature limits
–25...55 °C (–13...131 °F)

Operating humidity limits
Up to 95 % RH non-condensing

Power Supply

Voltage requirements
100...130 V, 200...260 V, 50/60 Hz

Power consumption
< 6 VA AC

Error due to power supply variation
Less than 0.1 % for +6 % –20 % variation from nominal supply

Insulation
Mains to earth (line to ground) 2 kV RMS

Relay Outputs and Set Points

No. of relays
2

Relay contacts
Single pole changeover
Rating 250 V AC 250 V DC max.
3 A AC, 3 A DC max.
Loading (non-inductive) 750 VA 30 W max.
(inductive) 750 VA 3 W max.

Insulation
2 kV RMS contacts to earth (ground)

No. of set points
2

Set point adjustment
Programmable

Set point hysteresis
±1 % fixed

Local set point annunciation
Red LED

Retransmission

No. of retransmission signals
One fully isolated programmable 0...10 mA, 0...20 mA or 4...20 mA
Optional second current output

Accuracy
±0.25 % FSD ±0.5 % reading

Resolution
0.1 % at 10 A, 0.05 % at 20 mA

Max. load resistance
750 Ω (20 A max.)

Mechanical Data

Model 4690/500

Wall-mounting	
Protection	IP66/NEMA4X
Dimensions	160 mm (6.30 in.) wide x 214 mm (8.43 in.) high x 68 mm (2.68 in.) deep
Weight	2 kg (4½ lb)

Model 4695/500

Panel-mounting	(¼ DIN)
Protection	IP66/NEMA4X front
Dimensions	96 mm (3.78 in.) wide x 96 mm (3.78 in.) high x 191 mm (7.52 in.) deep
Weight	1.5 kg (3¼ lb)
Panel cut-out:	$92^{+0.8}_{-0}$ mm x $92^{+0.8}_{-0}$ mm ($3.62^{+0.03}_{-0}$ in. x $3.62^{+0.03}_{-0}$ in.)

DS/4690–EN Rev. B

12 Spares and Consumables

12.1 Maintenance Kits

Part Number	Description	Kit Contents
7998023	Wiper blade pack	4 x 7997203
7998044	Replacement LED kit (ISO infrared LED version)	1 x 7998126, 1 x 7998021
7998032	Replacement lamp kit (EPA white light version)	1 x 7998125, 1 x 7998021

12.2 Accessories

Part Number	Description	Kit Contents
7998047	Dry standard LOW for use with ISO infrared LED version	7998181 dry standard + calibration certificate
7998048	Dry standard HIGH for use with ISO infrared LED version	7998183 dry standard + calibration certificate
7998035	Dry standard LOW for use with EPA white light version	7998171 + calibration certificate
7998036	Dry standard HIGH for use with EPA white light version	7998173 + calibration certificate

12.3 Upgrade Kits

Part Number	Description	Kit Contents
7998022	Wiper unit upgrade kit	1 each of: 7998140 0216580 – cable gland and locknut 7998023 – wiper blade pack 7998317 – wiper cap

12.4 Strategic Spares

Part Number	Description	Kit Contents
7998025	Emitter unit (EPA white light version)	1 x 7998100
7998027	Receiver unit (EPA white light 0 to 40 NTU)	1 x 7998105
7998028	Receiver unit (EPA white light 0 to 400 NTU)	1 x 7998106
7998024	Feed/drain kit	1 x 7998149, 2 x 0216509, 2 x 0216510
7998026	Emitter unit (ISO infrared LED version)	1 x 7998101
7998029	Receiver unit (infrared LED 0 to 40 NTU)	1 x 7998107
7998030	Receiver unit (infrared LED 0 to 400 NTU)	1 x 7998108
7998037	Replacement ball valves	2 x 0216509
7998038	Replacement hose connectors	2 x 0216510
7998039	Replacement wiper O-ring	2 x 0211346
7998031	O-ring spares kit	1 each of: 0211051, 0211317, 0211346 2 each of: 0211223, 0211314,
7998021	Replacement endcaps	2 x 7998130
7998020	Wiper plug assembly	1 x 7998148
7998190	Cal record card kit	3 x 7998385 – cal record card kit 1 x 0219319 – Vispass bespoke 1 x STT3367 – 250 mm (10 in.) cable tie
7998049	Wiper unit replacement	1 x 7998140 – wiper unit 1 x 7998023 – wiper blade pack

12.5 Software

Part Number	Description	Kit Contents
7998040	7998 Turbidity EPROM (basic)	1 x 46803000 BASIC
7998041	7998 Turbidity EPROM (second retransmission)	1 x 46803001 2ND RETRANS
7998042	7998 Turbidity EPROM (Modbus)	1 x 46803002 MODBUS
7998043	7998 Turbidity EPROM (PROFIBUS)	1 x 46803003 PROFIBUS

12.6 De-bubbler

Item	Description	Part Number
1	O-ring large (3 off)	0211 322
2	O-ring small (2 off)	0211 138
3	Quick-fit connector (2 off)	7997 511

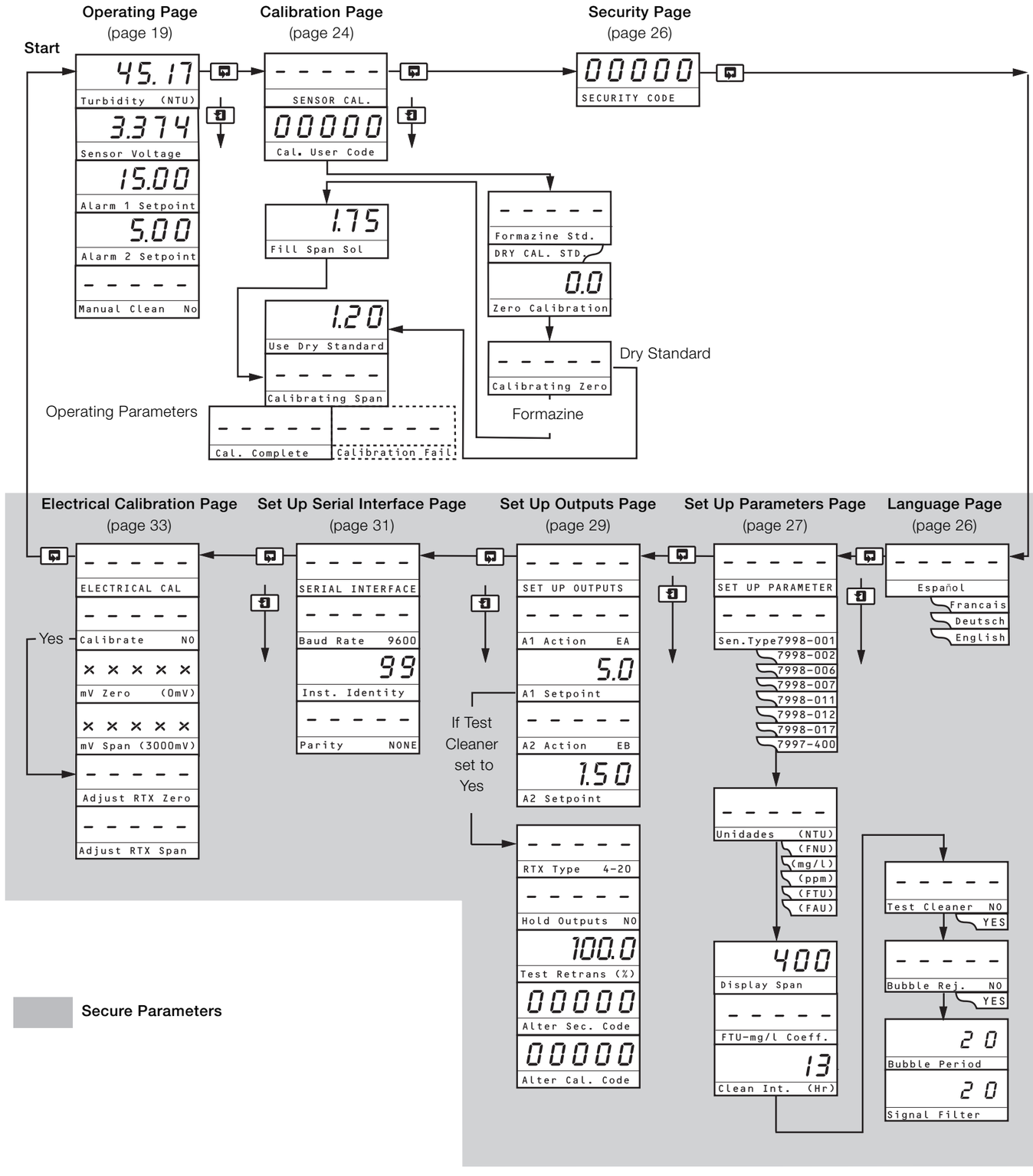
Start
Operating Page
(page 19)
45.17
Turbidity (NTU)
3.374
Sensor Voltage
15.00
Alarm 1 Setpoint
5.00
Alarm 2 Setpoint
- - - - -
Manual Clean No
Calibration Page
(page 24)
- - - - -
SENSOR CAL.
00000
Cal. User Code
Security Page
(page 26)
00000
SECURITY CODE
1.75
Fill Span Sol
1.20
Use Dry Standard
- - - - -
Calibrating Span
- - - - -
Cal. Complete
- - - - -
Calibration Fail
Operating Parameters
- - - - -
Formazine Std.
DRY CAL. STD
0.0
Zero Calibration
- - - - -
Calibrating Zero
Formazine
Dry Standard
Electrical Calibration Page
(page 33)
Set Up Serial Interface Page
(page 31)
Set Up Outputs Page
(page 29)
Set Up Parameters Page
(page 27)
Language Page
(page 26)
ELECTRICAL CAL
Calibrate NO
Yes
mV Zero (0mV)
mV Span (3000mV)
Adjust RTX Zero
Adjust RTX Span
SERIAL INTERFACE
Baud Rate 9600
99
Inst. Identity
Parity NONE
SET UP OUTPUTS
A1 Action EA
5.0
A1 Setpoint
A2 Action EB
1.50
A2 Setpoint
If Test Cleaner set to Yes
RTX Type 4-20
Hold Outputs NO
100.0
Test Retrans (%)
00000
Alter Sec. Code
00000
Alter Cal. Code
SET UP PARAMETER
Sen.Type 7998-001
7998-002
7998-006
7998-007
7998-011
7998-012
7998-017
7997-400
Unidades (NTU)
(FNU)
(mg/l)
(ppm)
(FTU)
(FAU)
400
Display Span
FTU-mg/l Coeff.
13
Clean Int. (Hr)
Español
Francais
Deutsch
English
Test Cleaner NO
YES
Bubble Rej. NO
YES
20
Bubble Period
20
Signal Filter
Secure Parameters

Products and customer support

Automation Systems
For the following industries:
- Chemical & Pharmaceutical
- Food & Beverage
- Manufacturing
- Metals and Minerals
- Oil, Gas & Petrochemical
- Pulp and Paper

Drives and Motors
- AC and DC Drives, AC and DC Machines, AC Motors to 1kV
- Drive Systems
- Force Measurement
- Servo Drives

Controllers & Recorders
- Single and Multi-loop Controllers
- Circular Chart and Strip Chart Recorders
- Paperless Recorders
- Process Indicators

Flexible Automation
- Industrial Robots and Robot Systems

Flow Measurement
- Electromagnetic Flowmeters
- Mass Flowmeters
- Turbine Flowmeters
- Wedge Flow Elements

Marine Systems & Turbochargers
- Electrical Systems
- Marine Equipment
- Offshore Retrofit and Refurbishment

Process Analytics
- Process Gas Analysis
- Systems Integration

Transmitters
- Pressure
- Temperature
- Level
- Interface Modules

Valves, Actuators and Positioners
- Control Valves
- Actuators
- Positioners

Water, Gas & Industrial Analytics Instrumentation
- pH, Conductivity and Dissolved Oxygen Transmitters and Sensors
- Ammonia, Nitrate, Phosphate, Silica, Sodium, Chloride, Fluoride, Dissolved Oxygen and Hydrazine Analyzers
- Zirconia Oxygen Analyzers, Katharometers, Hydrogen Purity and Purge-gas Monitors, Thermal Conductivity

Customer support
We provide a comprehensive after sales service via a Worldwide Service Organization. Contact one of the following offices for details on your nearest Service and Repair Centre.

UK
ABB Limited
Tel: +44 (0)1453 826661
Fax: +44 (0)1453 829671

USA
ABB Inc.
Tel: +1 215 674 6000
Fax: +1 215 674 7183

Client Warranty
Prior to installation, the equipment referred to in this manual must be stored in a clean, dry environment, in accordance with the Company's published specification. Periodic checks must be made on the equipment's condition. In the event of a failure under warranty, the following documentation must be provided as substantiation:
- A listing evidencing process operation and alarm logs at time of failure.
- Copies of all storage, installation, operating and maintenance records relating to the alleged faulty unit.

Contact us

ABB Limited
Process Automation
Oldends Lane
Stonehouse
Gloucestershire GL10 3TA
UK
Tel: +44 1453 826 661
Fax: +44 1453 829 671

ABB Inc.
Process Automation
125 E. County Line Road
Warminster
PA 18974
USA
Tel: +1 215 674 6000
Fax: +1 215 674 7183

www.abb.com

Note
We reserve the right to make technical changes or modify the contents of this document without prior notice. With regard to purchase orders, the agreed particulars shall prevail. ABB does not accept any responsibility whatsoever for potential errors or possible lack of information in this document.

We reserve all rights in this document and in the subject matter and illustrations contained therein. Any reproduction, disclosure to third parties or utilization of its contents in whole or in parts – is forbidden without prior written consent of ABB.

Copyright© 2015 ABB
All rights reserved

IM/4690-EN Rev. E 04.2015

Power and productivity for a better world™

10.4 - A2 – AMT GORMAN RUPP SEWAGE PUMP

Please read and save this Repair Parts Manual. Read this manual and the General Operating Instructions carefully before attempting to assemble, install, operate or maintain the product described. Protect yourself and others by observing all safety information. The Safety Instructions are contained in the General Operating Instructions. Failure to comply with the safety instructions accompanying this product could result in personal injury and/or property damage! Retain instructions for future reference. AMT reserves the right to discontinue any model or change specifications at any time without incurring any obligation.

©2013 American Machine & Tool Co., Inc. of PA, A Subsidiary of The Gorman-Rupp Company, All Rights Reserved.

Periodic maintenance and inspection is required on all pumps to ensure proper operation. Unit must be clear of debris and sediment. Inspect for leaks and loose bolts. Failure to do so voids warranty.

Electric Motor-Driven Pumps

Refer to Specific Information and Repair Parts Manual for product specific information.

A Gorman-Rupp Company

SAFETY GUIDELINES

This manual contains information that is very important to know and understand. This information is provided for SAFETY and to PREVENT EQUIPMENT PROBLEMS. To help recognize this information, observe the following symbols:

⚠ DANGER

Danger indicates an imminently hazardous situation which, if not avoided, WILL result in death or serious injury.

⚠WARNING

Warning indicates a potentially hazardous situation which, if not avoided, COULD result in death or serious injury.

⚠ CAUTION

Caution Indicates a potentially hazardous situation which, if not avoided, MAY result in minor or moderate injury.

NOTE: ***Indicates important information that, if not followed, may cause damage to equipment.***

UNPACKING

When unpacking the unit, inspect carefully for any damage that may have occurred during transit. Check for loose, missing or damaged parts. (See pump exploded view and Repair Parts List.) **Do not attempt to assemble or operate pump if any parts are missing or damaged. Determine that all parts are properly installed.**

GENERAL SAFETY INFORMATION

1. Know the pump application, limitations, and potential hazards. Read all manuals included with this product carefully. Be thoroughly familiar with the pump and the proper use of the equipment.

⚠WARNING

Pump should only be used with liquids compatible with pump component materials.

⚠ DANGER

Do not use to pump flammable or explosive fluids such as gasoline, fuel oil, kerosene, etc. Do not use in flammable and/or explosive atmospheres.

When pumping hazardous or dangerous materials, use only in room or area designated for that purpose. For your protection, always wear proper clothing, eye protection, etc. in case of any malfunction. For proper handling techniques and cautions, contact your chemical supplier, insurance company and local agencies (fire dept., etc.). Failure to comply with this warning could result in personal injury and/or property damage.

2. Make certain that the power source (engine) conforms to the requirements of your equipment.
3. Provide adequate protection and guarding around moving parts.
4. Disconnect power before servicing. If the power disconnect is out of sight, lock in the open position and tag it to prevent unexpected application of power. Failure to do so could result in fatal electric shock!
5. Release all pressure within the system before servicing any component.
6. Drain all liquids from the system before servicing.
7. Secure the discharge line before starting the pump. An unsecured discharge line will whip, possibly causing personal injury and/or property damage.
8. Check hoses for weak or worn condition before each use, making certain that all connections are secure.
9. Periodically inspect pump and system components. Perform routine maintenance as required (See Maintenance section).
10. Provide a means of pressure relief for pumps whose discharge line can be shut-off or obstructed.
11. **Personal Safety:**
    a. Wear safety glasses at all times when working with pumps.
    b. Wear a face shield and proper apparel when pumping hazardous chemicals.
    c. Keep work area clean, uncluttered and properly lighted; replace all unused tools and equipment.
    d. Keep visitors at a safe distance from the work area.
    e. Make workshop childproof – with padlocks, master switches, and by removing starter keys.
12. This unit is not waterproof and is not intended to be used in showers, saunas or other potentially wet locations. The motor is designed to be used in a clean dry location with access to an adequate supply of cooling air. Ambient temperature around the motor should not exceed 104°F (40°C). For outdoor installations, motor must be protected by a cover that does not block airflow to and around the motor. This unit is not weatherproof nor is it able to be submersed in water.
13. When wiring an electrically driven pump, follow all electrical and safety codes, as well as the most recent United States National Electrical Code (NEC) and the Occupational Safety and Health Act (OSHA).

⚠WARNING

Risk of Electric shock!

Electric Motor-Driven Pumps

14. **THREE-PHASE MOTORS:** These units are for permanent installation using a power supply with a ground. To reduce the risk of electric shock, electric motor must have one of the following:
    a. Adequately grounded to a metal raceway system.
    b. Use of a separate grounding wire connected to bare metal on the motor frame or to the grounding screw located inside motor terminal box.
    c. By other suitable means.

    Refer to the most recent National Electrical Code (NEC) Article 250 (Grounding) for additional information. ALL WIRING SHOULD BE DONE BY A QUALIFIED ELECTRICIAN.

    On three-phase power, voltages on all three lines should be balanced within 1%. Unbalanced voltages cause motor overheating and poor performance.

⚠WARNING

Risk of Electric Shock! Never connect the green (or green and yellow) wire to a live terminal!

15. **SINGLE PHASE MOTORS:** These units can be wired for either portability with flexible 3-wire cord, or permanent installation using a supply with a ground. To reduce the risk of electric shock, the motor must be securely and adequately grounded! This can be accomplished by either (1) inserting plug (portable) directly into a properly installed and grounded 3-prong grounding type receptacle (as shown in Figure A for 110-120 volt, or Figure B for 220-240 volt) (2) permanently wiring the unit with a grounded, metal raceway system (3) using a separate ground wire connected to the bare metal of the motor frame or (4) other suitable means. The green (or green and yellow) conductor in the cord is the grounding wire.

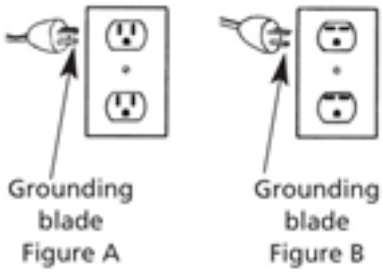

Figure 1 - Grounding Methods

    Where a 2-prong wall receptacle is encountered, it must be replaced with a properly grounded 3-prong receptacle installed in accordance with the National Electrical Code, local codes and ordinances. To ensure a proper ground, the grounding means must be tested by a qualified electrician.
16. Use only 3-wire extension cords that have 3-prong grounding type plugs and 3-pole receptacles that accept the equipment plug.
17. All wiring should be performed by a qualified electrician.
18. Protect electrical cord from sharp objects, hot surfaces, oil and chemicals. Avoid kinking the cord. Replace or repair damaged or worn cords immediately.
19. Keep fingers and foreign objects away from ventilation and other openings. Do not insert any objects into the motor.
20. Use wire of adequate size to minimize voltage drop at the motor.
21. Disconnect power before servicing a motor or its load. If the power disconnect is out of sight, lock it in the open position and tag it to prevent unexpected application of power.
22. Do not touch an operating motor. Modern motors are designed to operate at high temperatures.

⚠WARNING

Do not handle a pump or pump motor with wet hands, when standing on a wet or damp surface or in water.

⚠WARNING

Specific single phase pump motors are equipped with an automatic resetting thermal protector and may restart unexpectedly. Protector tripping is an indication of motor overloading as a result of operating the pump at low heads (low discharge restriction), excessively high or low voltage, inadequate wiring, incorrect motor connections or a defective motor or pump. A motor equiped with a automatic thermal protection will be inidicated on the motor nameplate

INSTALLATION

⚠WARNING

The pumps should not be used in flammable or explosive atmospheres. In order to safely use this product, familiarize yourself with this pump and also with the liquid (chemical, etc.) that is going to be pumped through the unit. This pump is not suitable for many liquids.

For installations where property damage might result from an inoperative or leaking pump due to power outages, discharge line blockage or any other reason, a backup system(s) should be used.
Failure to follow any warning can result in personal injury and/or property damage.

LOCATION

a. **Open Drip Proof Motor** - Clean dry locations with access to an adequate supply of cooling air.
b. **Totally Enclosed Motor** - Harsher environments where damp and dirty conditions may exist. Totally enclosed motors are not water proof.
c. Use only UL listed **Hazardous Location** motors for service in **Hazardous Locations** as defined in Article 500 of the NEC.
d. Temperature around the motor should not exceed 104°F (40°C). Minimum temperature is -20°F (29°C).
e. If the motor nameplate indicates “Air-Over, Cont. A.O.,” etc., the motor must be mounted in the air stream of an air moving device.

1. Locate pump as close to the fluid source as possible, thus making the suction line short and direct as possible.

⚠ CAUTION

The unit should be placed where the motor and electrical components are protected from the weather and extremes of heat, cold and humidity.

2. Attach piping suction line to suction inlet and piping discharge line to discharge outlet. Avoid using looped section of pipe or fittings, which might permit air to ensure airtight pipe connections.

IMPORTANT: If plastic or fabric hose is used for the suction piping, it should be of a reinforced type so as not to collapse under suction. The suction piping should be one size larger than the discharge piping.

Electric Motor-Driven Pumps

3. Support the piping independently of the pump to avoid universal or excessive stresses on the pump casing, which would cause impeller misalignment and possible pump failure.
4. Install both a union and a gate valve (not furnished) on the discharge side of the pump for service convenience.

⚠ CAUTION

Do not use a globe or other restricting type of valve at the discharge. Globe valves seriously restrict the capacity of the pump; however, restricting the discharge of a centrifugal pump will not overload the drive motor.

5. **SELF-PRIMING PUMPS:** It is recommended that a foot valve be used on the suction line to assure quick priming and that a suitable suction strainer be attached to the suction line so that large pieces of foreign material are not drawn into the pump.
    a. Locate pump as close to the fluid source as possible making the suction line as short and direct as possible.

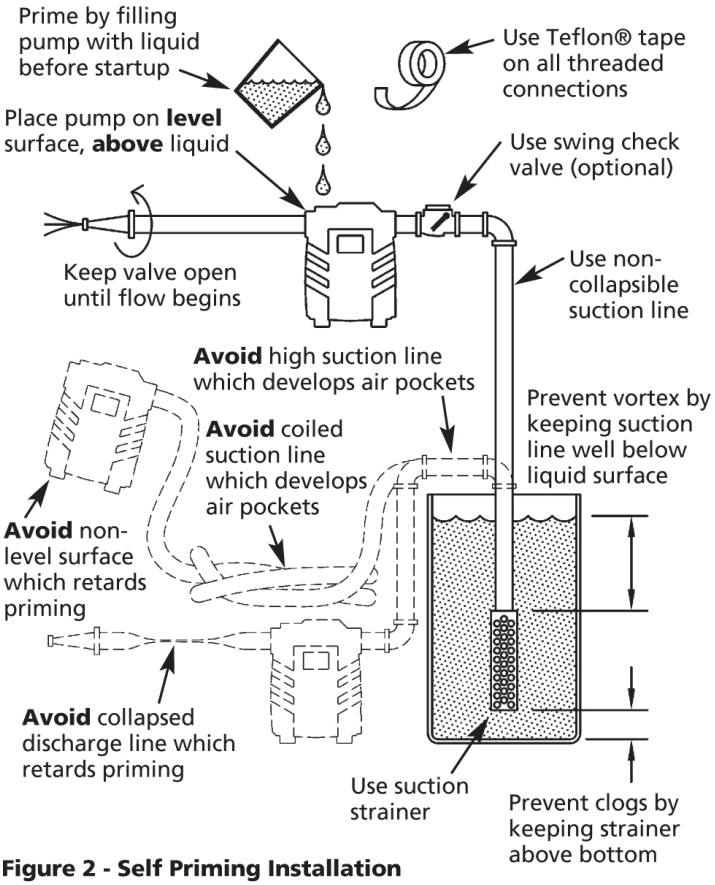

Figure 2 - Self Priming Installation

    b. The suction line should be positioned such that there is a continual upward slope from the fluid source to the pump. Avoid using loops or sections of pipe or fittings which might permit air to become trapped.
    c. Suction piping should be the same size as the discharge piping.

6. **WIRING:** For proper electrical connections, refer to the diagram located on the nameplate or inside the terminal of the motor. Make sure the connections are correct for the voltage being supplied to the motor. Connections should be made with flexible conduit to minimize vibration transmission.

    Whenever possible, the pump should be powered from a separate branch circuit of adequate capacity to keep voltage drop to a minimum during starting and running.

    Select the voltage to be used, either
    a. Single phase - 115V or 230V
    b. Three phase - 230V or 460V

    Check motor wiring to verify which voltage the motor is currently wired for. If the wiring must be changed to conform to a specific voltage requirement, then the motor should be wired according to recommendations of wiring diagrams located on motor nameplate or wiring compartment cover. Make sure unit is properly grounded. A motor to be used with single phase power cannot be used with three phase power and vice versa. If unsure about the above information or the wiring diagrams, consult an electrician familiar with motor wiring.

⚠WARNING

A wrong connection can burn out the pump motor, cause an electrical short or produce an electrical shock. Failure to follow the above warning can result in property damage and/or personal injury. Always wire the motor with a three-wire system, ensuring that a ground wire runs to a good electrical ground such as a grounded water system or conduit. Also, ensure that a good electrical ground is provided at the supply end of the line. Connections should be made with flexible conduit to minimize vibration transmission.

7. Do not operate pump dry. Mechanical seal damage will result.
8. Install any auxiliary components (e.g. pressure switch, time).

OPERATION

SELF-PRIMING PUMPS

It is necessary to prime the pump before initial startup. Prime the pump by filling the casing with liquid through the top fill plug, the discharge port, or by installing a pipe tee at the discharge of the pump. (When installing a tee, use the horizontal leg of the tee as the pump discharge and place a pipe plug in the vertical leg. This procedure will help facilitate priming later.)

NON-PRIMING PUMPS

1. The casing and suction piping must be filled with liquid before the unit can begin pumping. In order to completely fill casing with liquid, entrapped air in casing must be vented. This is accomplished by momentarily loosening or removing the top drain plug located on the casing.

⚠ CAUTION

Do not run pump dry as permanent damage to the mechanical seal will result.

2. Activate the unit.

IMPORTANT: Proper Rotation- Power supply should be applied momentarily to the pump at first and the direction of rotation checked. When viewing the front of the pump, the motor shaft (impeller) should be rotating counterclockwise. If it is not, disconnect power and re-check wiring to motor. (See “Installation” section.) To change rotation on three phase models, interchange any two incoming line (power) leads. Other models, consult driver information that came with driver.

NOTE: Never shut off discharge or restrict suction flow while the pump is operating. It may take up to 5 minutes for a **SELF-PRIMING** pump to prime if

Electric Motor-Driven Pumps

long horizontal/ vertical lines are used. If pump has not picked up prime in 2 minutes, re-prime piping and casing after letting unit cool down for 5 minutes. Re-check all suction connections making sure pipe compound has sealed all connections. Initial priming may take 2 to 3 tries to prime successfully.

⚠ CAUTION

The proper Impeller (motor) rotation is CCW (counter clockwise) facing the front of the pump. Wrong rotation will give low performance, low head and could damage unit and/or injure personnel.

3. On initial start-up (after 15 minutes running time), check power consumption to be sure motor is not overloaded.
4. If motor is overloaded, install a valve on discharge to increase back pressure. Close the valve until pump motor is below full nameplate or within Service Factor (SF) amps.

MAINTENANCE

⚠WARNING

Make certain that the unit is disconnected from the power source before attempting to service or remove any components!

NOTE: Always flush pump thoroughly after use or if unit is not going to be used for any prolonged length of time to prevent crystallization and/or damage to seal and pump.

ROUTINE

1. Pump should be drained when subjected to freezing temperatures. A drain plug is provided on the pump casing.
2. Clean the suction line strainer at regular intervals.
3. Properly selected and installed electric motors are capable of operating for years with minimal maintenance. Periodically clean dirt accumulations from open-type motors, especially in and around vent openings, preferably by vacuuming (avoids imbedding dirt in windings).
4. Periodically check to see if electrical connections are tight.
5. Pump should be checked daily, weekly, monthly, etc. for proper operation. If anything has changed since unit was new, unit should be removed and repaired or replaced. Only qualified electricians or service personnel should attempt to repair this unit. Improper repair and/or assembly can cause an electrical shock hazard.

TROUBLESHOOTING CHART

Problem	Possible Cause(s)	Corrective Action
Motor will not start or run	1 Improperly wired.	1 Check wiring diagram on motor.
	2 Blown fuse or open circuit breaker.	2 Replace fuse or close circuit breaker after reason for overload has been determined and corrected.
	3 Loose or broken wiring.	3 Tighten connections, replace broken wiring.
	4 Stone or foreign object lodged in impeller.	4 Disassemble pump and remove foreign object.
	5 Motor shorted out.	5 Replace.
	6 Thermal overload has opened circuit.	6 Allow unit to cool. Restart after reason for overload has been determined.
	7 Voltage too low at motor terminals due to line drop.	7 Consult local power company. Increase wire size. Check for poor connections.
Motor runs slowly; will not get up to speed	1 Motor wired improperly.	1 Check and recheck wiring diagram on motor. Make internal wiring changes in wiring compartment.
	2 Capacitor burned out (single phase units only).	2 Replace capacitor.
	3 Voltage too low at motor terminals.	3 Increase wire size. Check for poor connections. Check for voltage unbalance (3 phase).
Motor overheats while running under load	1 Dirt blocking ventilation openings.	1 Clean Motor.
	2 Unbalanced supply voltage.	2 Check for faulty connections. Voltage on all three lines should be balanced within 1%. Excessive single phase loads.
	3 Faulty connection.	3 Clean, tighten, or replace.
	4 High or low voltage.	4 Check voltage at motor, should not be more than 10% above or below rated.
Pump will not prime	1 No priming water in casing.	1 Fill pump casing.
	2 Mechanical seal is leaking.	2 Replace (See Maintenance).
	3 Leak in suction line.	3 Use threaded sealant on piping, tighten, repair or replace.
	4 Discharge line is closed and priming air has nowhere to go.	4 Open.
	5 Suction line (or valve) is closed.	5 Open.
	6 Pipe union was used on suction side instead of discharge.	6 Remove union from suction side. Replace with single section of pipe.
	7 Pump is worn.	7 Replace worn parts.

TROUBLESHOOTING CHART (continued)

Problem	Possible Cause(s)	Corrective Action
Little or no discharge	1 Casing not filled with water.	1 Fill pump casing with liquid.
	2 Total head too high.	2 Shorten suction lift and/or discharge head.
	3 Suction head too high.	3 Lower suction head, install foot valve and prime.
	4 Impeller plugged.	4 Disassemble pump and clean impeller.
	5 Rotation incorrect.	5 Correct (See wiring diagram on motor)
	6 Hole or air leak in suction line.	6 Repair or replace suction line.
	7 Foot valve was too small.	7 Match foot valve to piping or install one size larger foot valve.
	8 Impeller damaged.	8 Replace.
	9 Foot valve or suction line not submerged deep enough in water.	9 Submerge lower in water.
	10 Suction piping too small.	10 Increase to pump inlet size or one size larger.
	11 Discharge piping too small.	11 Match to discharge outlet size on pump.
	12 Motor wired incorrectly.	12 Check wiring diagram.
	13 Casing gasket leaking.	13 Replace.
	14 Suction or discharge line valve closed.	14 Open.
	15 Single phase, new installation. Motor wired for 230V, etc. but supply is 115V, etc.	15 Check voltage of incoming power supply. Rewire as necessary.
	16 Mechanical seal is leaking.	16 Replace (See Maintenance).
Loss of suction	1 Air leak in suction line.	1 Use threaded sealant on piping, tighten, repair or replace.
	2 Suction lift too high.	2 Lower suction lift, install foot valve and prime.
	3 Clogged foot valve or strainer.	3 Clean.
Pump vibrates and/or makes excessive noise	1 Mounting plate or foundation not rigid enough.	1 Reinforce.
	2 Foreign material in pump.	2 Disassemble pump and clean.
	3 Impeller damaged.	3 Replace.
	4 Worn motor bearings.	4 Replace.
	5 Suction lift too high.	5 Decrease suction lift.
	6 Cavitation present.	6 Check suction line for proper size and be sure valve is open. Remove excessive lops in suction line. Install gate valve on discharge side of pump and reduce flow as necessary to match suction conditions available.
Pump leaks at shaft	1 Damaged or worn mechanical seal.	1 Replace (See Maintenance).
	2 Corrosion due to character of liquid pumped.	2 Discontinue pumping liquid and consult factory.
	3 Abrasive material in liquid causing an accumulation around the rotating assembly which results in faces opening up and allowing grit between them.	3 Pump not designed for abrasives. Discontinue use
	4 Liquid not compatible with seal.	4 Consult factory. Operational seal may be available.
	5 Temperature too high.	5 Lower liquid temperature below temperature rating of pump, See Specifications.
Pinholes in casting, drips around seal area	1 Cavitation caused by insufficient inlet pressure or suction head (NPSH).	1 Increase inlet pressure by adding a higher liquid level of fluid to source, increasing inlet pressure, or remove piping restrictions(valves, lops, etc.) in suction line.

American Machine & Tool Co., Inc. of PA
(herein "AMT")
400 Spring Street
Royersford, PA 19468
Phone: (610) 948-3800
Fax: (610) 948-5300
www.amtpump.com

General Information

SALES POLICY: AMT products are sold through our established Distributors. We do not sell direct to the consumer or organization not entitled to trade recognition. Therefore, possession of our catalogs and/or price list(s) does not infer an offer to sell.

MINIMUM ORDER: We appreciate your order, however, all orders are subject to a minimum $35.00 net invoice charge (excluding freight). This applies to all pump and parts purchase orders.

PRICES: Prices are subject to change without notice. All orders accepted are subject to prices in effect at time of shipment.

PAYMENT TERMS: Terms, upon establishment of credit, are Net 30 days. Past due accounts may be subject to a service charge of 1.5% per month. Domestic or assignable letter of credit is required for all export trade.

PAST DUE ACCOUNTS: AMT reserves the right to withhold open account shipments on any past due account. Invoices are considered past due after thirty (30) days. In the interest of sound business, all orders are subject to approval of the Credit Department.

SHIPPING INSTRUCTIONS: All shipments will be made F.O.B. the factory. Where instructions for shipment do not appear on the order, the shipment will be made according to our best judgment. Full risk of loss (including transportation delays and losses) shall pass to the customer upon delivery of the products to the carrier at the F.O.B. point. When loss or delay occurs, primary responsibility for tracing rests with the customer. When there is LOSS or APPARENT VISIBLE DAMAGE to a shipment, when tendered for delivery, *DO NOT* give the carrier a clear receipt. Note such damage on the carrier's delivery receipt and *HAVE THE DRIVER SIGN THE RECEIPT.*

PRODUCT REVISIONS: AMT reserves the right to discontinue, change or improve its products or any portions thereof without being obligated to provide such a change or improvement for units sold and/or shipped prior to such a change or improvement.

LEAD TIME: Products designated "Quick Ship Product", also referred to as "QSP" will normally be shipped within 24 hours of receipt of a non-cancellable purchase order. Only limited quantities of "QSP" pumps are available.

STANDARD LEAD TIME: Lead time is two weeks for all non "QSP" product. AMT reserves the right to revise lead times as required due to availability of materials and all other causes beyond our control.

VIP SHIPMENT: Select AMT and IPT branded pumps are available for next day shipment for non-QSP (Quick Ship Products) items and subjected to a specific model surcharge per unit noted in the respective price book. Requires calling for availability, confirmation and a non-cancellable purchase order or credit card payment prior to shipment. The expedited shipping charges are an additional cost added separately from the VIP charges per item. AMT reserves the right to revise lead times as required due to availability of materials and all other causes beyond our control. QSP quantities are limited as determined by AMT.

ALL purchase orders must be submitted via hard copy sent to AMT customer service department by fax, EDI or e-mail.

RETURN GOODS POLICY: Goods shall not be returned without a return goods authorization number (RGA) issued by AMT customer service. The RGA number must be listed on the packing list. Only current model and part numbers with a valid date code may be returned (within one year from date of purchase). **A 20% restocking and packaging charge will apply to all returns. All shipping charges must be pre-paid. No exceptions.**

ORDER CHANGES BY CUSTOMER: Orders in process may not be changed except with written consent and may be subject to special charges.

12 Month Limited Warranty

EXTENT AND DURATION OF LIMITED WARRANTY

Coverage: American Machine & Tool Company (herein "AMT") or IPT Pumps by Gorman-Rupp (herein "IPT") or Gorman-Rupp Industries Division of The Gorman-Rupp Company, Patterson, or the Gorman-Rupp Company (herein referred to as "G-R Unit") each individually warrants that its products and parts shall be free from defects in material ad workmanship for twelve (12) months from the date of purchase by the original end user when installation is made and maintenance is performed in accordance with G-R Unit's recommendations. Wear and tear resulting from use and items normally consumed in use are not covered.

EXCEPTIONS

(A) This Limited Warranty shall not apply to mechanical seals in AMT or IPT pumps and the following products and parts: engines, motors, trade accessories and all other products, components, parts and materials not manufactured by the G-R Units. These items may, however, be covered by the warranties of their respective manufacturers. (B) This warranty does not extend to or apply to any unit which has been repaired or altered at any place other than by a G-R Unit, or by persons not expressly approved by a G-R Unit to make repairs or alterations, nor to any unit the serial number, model number or identification of which has been removed, defaced or altered. (C) This warranty does not extend to any product manufactured by a G-R Unit, which has been subjected to mis-use, neglect, accident, improper installation, or use in violation of instructions furnished by a G-R Unit. (D) Pump Kits: This warranty does not extend to any product sold by a G-R Unit unassembled as a Pump Kit. Pump Kits are warranted against defects in material and workmanship for 60 days from the date of shipment from a G-R Unit. Any Pump Kit parts deemed defective by a G-R Unit will be replaced free of charge within 60 days of shipment. Pump Kits are not returnable for credit.

LIMITATIONS

THE G-R UNITS' SOLE AND EXCLUSIVE WARRANTY WITH RESPECT TO THEIR PRODUCTS AND PARTS IS THIS LIMITED WARRANTY. THIS LIMITED WARRANTY IS IN LIEU OF ALL OTHER EXPRESS AND/OR IMPLIED WARRANTIES, INCLUDING IMPLIED WARRANTIES OF MERCHANTABILITY AND FITNESS FOR PARTICULAR PURPOSE.

EXCLUSIVE REMEDY AND DAMAGES

The sole and exclusive remedy for breach of this Warranty by a G-R Unit and the entire extent of its liability for such breach or for damages arising from the use of the products and parts covered under this Limited Warranty, shall be as follows:

1. **Repair or Replacement:** If inspection shows that any G-R Unit product or part covered under this Limited Warranty is defective in materials or workmanship, the G-R Unit shall repair or replace the defective or non-conforming product or part without charge, whichever the G-R Unit chooses. You must have properly maintained and used the product or part claimed to be defective in accordance with the maintenance schedule or manual, which comes with the product. No allowance will be made for labor, installation, removal, transportation or other charges incurred by you in connection with such repair or replacement.
2. To obtain the above remedy:
    A. Immediately notify the G-R Unit upon discovery of the claimed defect in materials or workmanship and provide the serial number or date code of the product and/or part(s) or provide the G-R Unit with the invoice or bill of sale referencing the product by no later than the expiration date of the warranty period.
    B. The G-R Unit will advise whether inspection will be necessary and how whether repair or replacement will be made. If inspection by the G-R Unit is necessary, the pump or defective part must be sent freight pre-paid to the G-R Unit. Return shipment will be F.O.B. the G-R Unit's plant.
    C. **Return Goods Authorization Requirement:** No product will be accepted for return or replacement without the prior written authorization of the G-R Unit. Upon such authorization, and in accordance with instructions from the G-R Unit, the product will be returned to the G-R Unit, shipping charges prepaid by the Buyer.

3. **Damages:** The G-R Unit's liability for damages for breach of this Limited Warranty shall not exceed the amount of the purchase price of the product or part(s) in respect to which Such damages are claimed. **IN NO EVENT SHALL THE G-R UNITS BE LIABLE FOR INCIDENTAL, CONSEQUENTIAL OR SPECIAL DAMAGES FOR BREACH OF THIS LIMITED WARRANTY.**

Some states do not allow the exclusion or limitation of incidental or consequential damages, so the above limitation or exclusion may not apply to you. This Limited Warranty gives you specific legal rights, and you may also have other rights, which vary from state to state.

A Gorman-Rupp Company

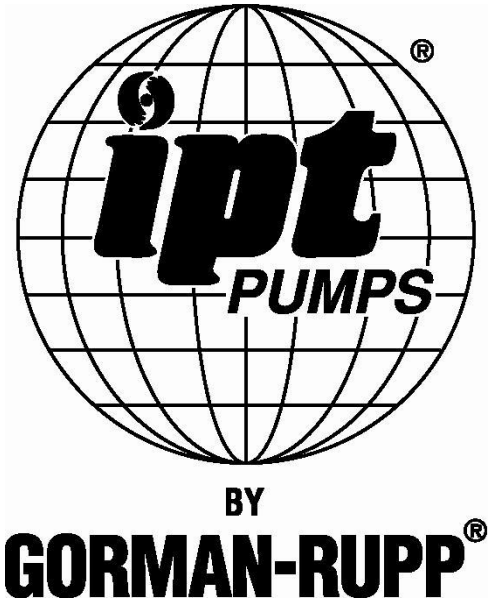

www.amtpump.com

Please read and save this Repair Parts Manual. Read this manual and the General Operating Instructions carefully before attempting to assemble, install, operate or maintain the product described. Protect yourself and others by observing all safety information. The Safety Instructions are contained in the General Operating Instructions. Failure to comply with the safety instructions accompanying this product could result in personal injury and/or property damage! Retain instructions for future reference. AMT reserves the right to discontinue any model or change specifications at any time without incurring any obligation.

©2013 American Machine & Tool Co., Inc. of PA, A Subsidiary of The Gorman-Rupp Company, All Rights Reserved.

Periodic maintenance and inspection is required on all pumps to ensure proper operation. Unit must be clear of debris and sediment. Inspect for leaks and loose bolts. Failure to do so voids warranty.

Sewage/Trash Pumps

Refer to pump manual 1808-634-00 for General Operating and Safety Instructions.

AMT A Gorman-Rupp Company

DESCRIPTION

This sewage/trash pump is a heavy duty, centrifugal, motor driven, self-priming (to 20 ft. lift) unit, after initially filling casing with liquid. Pump is equipped with a silicon carbide mechanical seal, cast iron wear surfaces and a stainless steel clog-resistant impeller. Units are used to handle water containing sewage, stones, sticks, mud and other solids: maximum diameter ½ the discharge NPT size. Handle liquids from 40º to 180º F (4º to 82º C) for use with nonflammable fluids compatible with pump component materials. All units come with built-in suction check valve to aid priming efficiency and easily removable casing/clean out cover and volute for quick debris clean out. An NPT threaded seal wash port is provided on Models 393A-95, 393B-95, 394A-95, 394B-95, 394C-95, 394D-95 and 399A-95. Units are powered by totally enclosed fan cooled (TEFC) motors, single or three phase power. Motor includes stainless steel shaft or stainless steel shaft sleeve.

⚠WARNING

Pumps must be operated in specific ranges as noted on respective curves on page 3 (Figure 3). Failure to adhere to curve will result in damage and cavitation to pump thus voiding warranty.

UNPACKING

Refer to Repair Parts Illustration and Repair Parts List to aid in identifying parts. Unpack and separate all pump components from container making sure all parts are accounted for.

Package should contain:

1. Pump and motor completely assembled.
2. Suction strainer.
3. Specifications Information & Repair Parts Manual.
4. General Operating Instructions & Maintenance Manual.

MAINTENANCE

Note: For information pertaining to the motor and motor parts, consult the motor manual or contact the nearest authorized service representative or the manufacturer.

⚠WARNING

Make certain that the unit is disconnected from the power source before attempting to service or remove any component.

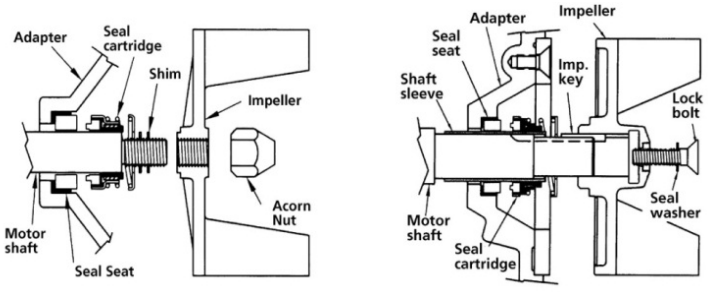

Figure 1 & 2 - Mechanical Seal Replacement

MECHANICAL SEAL REPLACEMENT

Should the mechanical seal, which consists of seal seat (Ref. No. 6), seal cartridge (Ref. No. 5), and shaft sleeve (Ref. No. 19, if applicable) require replacement, proceed as follows and refer to Figures 1 and 2. The seal should also be replaced if the adapter (Ref. No. 8) is to be replaced.

NOTE: Always replace the seal seat, seal cartridge, and shaft sleeve to ensure proper mating of mechanical seal components!

1. Unthread bolts (Ref. No. 9) and remove casing (Ref. No. 1) from adapter.
2. Unthread screw(s) (Ref. No. 11) and remove volute from adapter.
3. 316A-95 and 316B-95 (Figure 1): Remove impeller lock nut (Ref. No. 18). Unscrew impeller (Ref. No. 3) from the motor shaft. Use a rubber mallet or soft block of wood to loosen impeller. Turn it counterclockwise. Remove the impeller shim (Ref. No. 4) and seal cartridge (Ref. No. 5).
4. 393A-95, 393B-95, 394A-95, 394B-95, 394C-95, 394D-95, and 399A-95 (Figure 2): Using an Allen wrench, remove the impeller lock bolt (Ref. No. 18) and o-ring (Ref. No. 25). Slide impeller off motor shaft. Remove the impeller shim (Ref. No. 4), shaft sleeve (Ref. No. 19) and seal cartridge (Ref. No. 5).

IMPORTANT: Care should be taken to ensure that the same number of impeller shims (Ref. No. 4) are replaced behind the impeller as were removed. These impeller shims are located directly behind impeller. These shims as well as the impeller key (Ref. No. 21) become loose as the impeller is removed.

5. Unthread cap screws (Ref. No. 13) and remove adapter from motor.
6. Push seal seat (Ref. No. 6) from the adapter recess with a screwdriver.
7. Clean adapter recess before inserting a new seal seat.

⚠ CAUTION

The precision lapped faces on the mechanical seal are easily damaged. Handle your replacement seal carefully.

8. Carefully wipe the polished surface of the new seal seat with a clean cloth.
9. Wet rubber portion of the seal seat with a light coating of soapy water.
10. While wearing clean gloves or using a clean rag, press seal seat squarely into adapter recess. Avoid scratching the polished surface. If seal seat will not position properly, place a cardboard washer over the polished surface and use a piece of pipe to press in, firmly but gently.
11. After seal seat is in place, dispose of cardboard washer. Check that seat is clean and has not been marred.
12. Using a clean cloth, wipe the shaft and make certain that it is perfectly clean.
13. Secure the adapter on the motor mounting surface with fasteners.

Sewage/Trash Pumps

14. Wet the inside rubber portion of the new seal cartridge with a light coating of soapy water. 316A-95 and 316B-95: Slide cartridge onto motor shaft until cartridge meets seal seat. 393A-95, 393B-95, 394A-95, 394B-95, 394C-95, 394D-95 and 399A-95: Slide cartridge onto shaft sleeve. Slide shaft sleeve with seal cartridge onto motor shaft until cartridge meets seal seat. Reinstall impeller key.

I**MPORTANT:** Before installing new shaft sleeve, apply a bead of non-hardening, pliable sealant (such as Permatex® Form-A-Gasket® No. 2) to motor shaft shoulder.

15. Reinstall any impeller shims that have been removed. (See "Shim Adjustment" section).
16. 316A-95 and 316B-95: Screw impeller back in place, tightening until it is seated against shims and shaft shoulder. 393A-95, 393B-95, 394A-95, 394B-95, 394C-95, 394D-95 and 399A-95: Replace impeller key, impeller, o-ring and impeller lock bolt. Tighten lock bolt until impeller is seated against shims and shaft sleeve.
17. Remount volute with fasteners.
18. Refer to section entitled Shim Adjustment at this time if shaft sleeve or any other parts listed have been replaced.
19. Inspect position of flapper valve to ensure proper movement and sealing.
20. Replace o-ring seal on volute rabbet.

NOTE: Always inspect o-ring seals. Replace when cracked or worn. Wet o-ring with soapy water for ease of assembly.

21. Remount casing.
22. Remount any other parts and reconnect power.

SHIM ADJUSTMENT

When installing a replacement impeller, motor, shaft sleeve, adapter or volute, it may be necessary to adjust the number of impeller shims (Ref. No. 4) to ensure proper running clearance between impeller and the volute wear surface. Proceed as follows:

NOTE: Proper running clearance is 0.010".

1. For impeller replacement, add one (1) shim in addition to those removed originally.
2. For motor replacement, add one (1) shim in addition to the shims removed during disassembly.
3. Reassemble the pump as described in steps 15, 16, and 17. (See "Mechanical Seal Replacement" section).

IMPORTANT: Check the shaft to make sure it is turning freely (rotate the impeller by the impeller lock bolt with an Allen wrench or by the acorn nut with a socket wrench). If it turns freely, check to ensure that the volute and adapter are fitted metal-to-metal where they meet on the outside. If they are not metal-to-metal, tighten fasteners and recheck the shaft for free turning. Tighten carefully, turning the shaft while tightening so that the motor bearings are not damaged in the event that too many shims were installed. If shaft seizes before fasteners are completely tight, disassemble the pump and remove one (1) shim and repeat reassembly.

NOTE: When adding or removing shims, it is best to proceed with a 0.010" increment each time. If motor shaft does turn freely, add shims until it does strike, then remove a 0.010" shim. This will ensure maximum performance.

IMPELLER, WEARPLATE, AND VOLUTE REPLACEMENT

Impeller (Ref. No. 3), wear plate (Ref. No. 23) and volute (Ref. No. 2) are subject to wear only by abrasive sand or sediment laden liquids. If badly worn, all these parts can be replaced easily and the pump thus restored to full efficiency.

NOTE: When the clearance between the impeller and the volute exceeds 1/16" at the face of the impeller or 1/8" on the outside diameter of the impeller, it may be necessary to take corrective action. The increased clearance can cause lengthened priming times and reduce pumping capacity. If both the priming and capacity of your unit are satisfactory for your application, it is recommended that no corrective maintenance be performed regardless of what clearances on your unit may have developed, since the increased clearances in themselves are not generally harmful to your pump.

Normally, new pump clearances can be restored by simply shimming behind the impeller. (Add impeller shims (Ref. No. 4). If the impeller is badly worn, it is recommended that the impeller be replaced. This is usually all that is required since only on unusually abrasive service does the cast iron wear plate and volute show deterioration. Occasionally a stone or hard object might get caught in the impeller and cause damage to the volute. In these cases, follow the instructions below for replacement and refer to the associated Repair Parts Illustration.

1. Disassemble pump for access as described in MECHANICAL SEAL REPLACEMENT, steps 1, 2, 3 and 4.
2. Replace parts as necessary.

NOTE: When replacing volute, attach flapper valve to new volute.

To replace rear wear plate (Ref. No. 23), remove impeller (Ref. No. 3) and fasteners (Ref. No. 24).

NOTE: Before installing new parts, clean all mating surfaces thoroughly.

CLEANING

These units are designed with a removable volute and suction cleanout cover (394A-95, 394B-95, 394C-95, 394D-95 and 399A-95) enabling the pump to be cleaned or unclogged with ease. Remove the suction clean out cover plate (Ref. No. 26) and gasket and/or remove the casing and volute. Remove any debris found inside the unit, reassemble as described in MECHANICAL SEAL REPLACEMENT steps 17 to 22.

NOTE: When replacing clean out cover plate, carefully wipe clean all surfaces on which the gasket has contact. Also, make sure the gasket is in position.

FLAPPER VALVE CLEANING

If debris clogging the flapper valve becomes a constant problem, the flapper area can be cut from the perimeter gasket area and removed from the pump. It is important that the perimeter of the flapper valve remains to seal the inlet area of the casing/volute from the discharge area.

NOTE: Priming efficiency will be reduced if flapper portion is removed.

NOTE: Do not remove entire flapper valve. Perimeter of valve must remain; remove only the flapper area. The pump will not prime and performance will be affected if entire flapper valve is removed.

Sewage/Trash Pumps

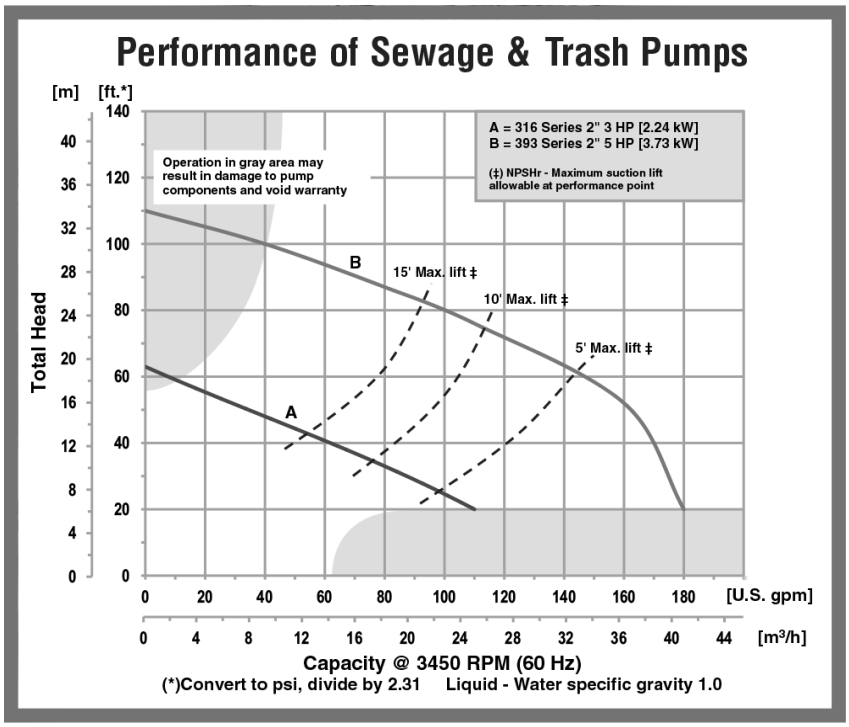

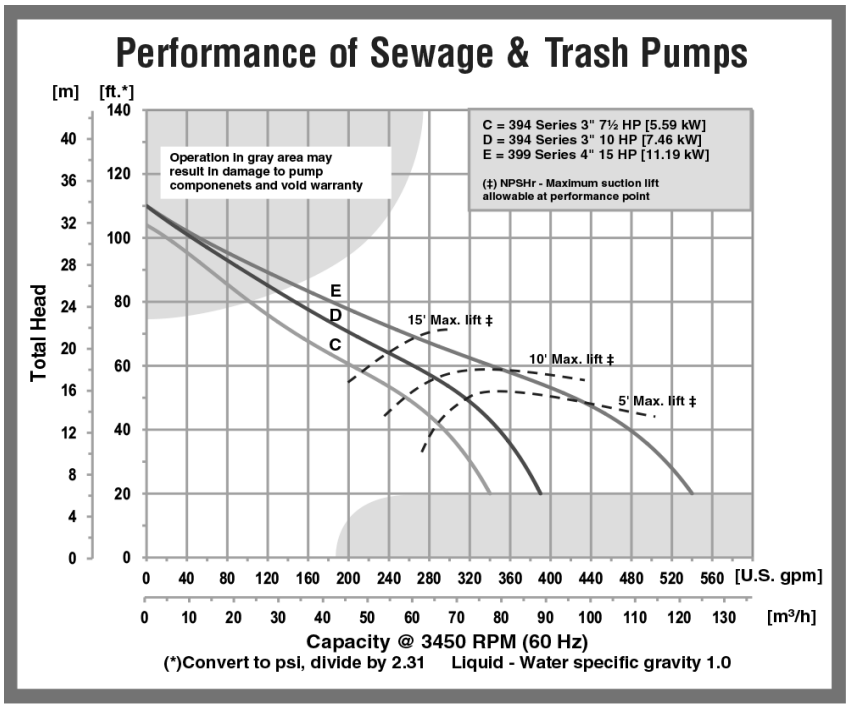

Figure 3 - Performance Curve

Sewage/Trash Pumps

For Repair Parts contact dealer where pump was purchased.

Please provide following information:
-Model Number
-Serial Number (if any)

Part description and number as shown in parts list

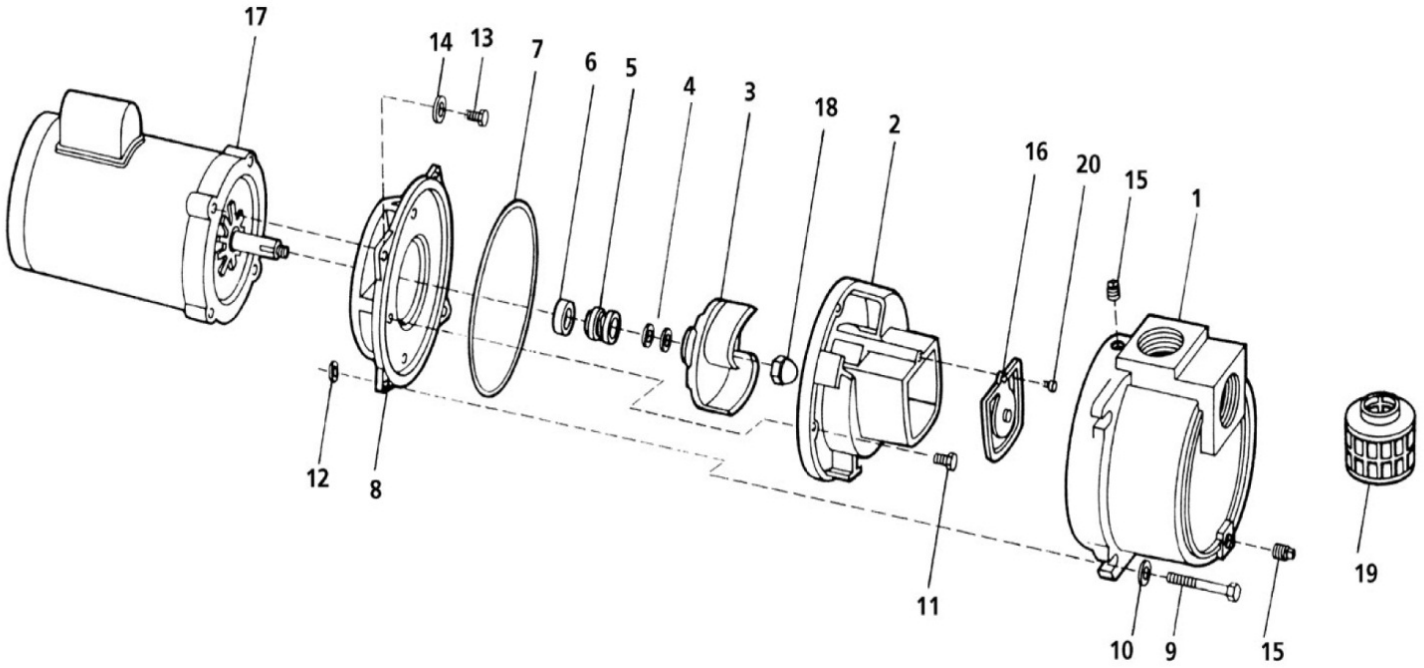

Figure 4 - Repair Parts Illustrations

Repair Parts List

Ref No.	Description	Part Number for Models 316A-95	316B-95	Qty
1	Casing	2111-001-02	2111-001-02	1
2	Volute	3163-150-09	3163-150-09	1
3	Impeller	3163-011-01	3163-011-01	1
4	Impeller Shim Set	1806-044-90	1806-044-90	1
5 & 6	Seal Assembly – Viton and Silicon Carbide	1640-165-90	1640-165-90	1
7	O-Ring – Buna-N	Incl. w/Ref. 21	Incl. w/Ref. 21	1
8	Adapter	1608-011-00	1608-011-00	1
9	3/8"-16 UNC x 2-3/4" Hex Head Bolt	*	*	4
10	3/8" Flat Washer	*	*	4
11	#10-24 UNC x 7/8" S.S. Socket Head Cap Screw	*	*	1
12	3/8"-16 UNC Hex Nut	*	*	4
13	3/8"-16 UNC x 1" Hex Head Cap Screw	*	*	4
14	3/8" Split Lock Washer	*	*	4
15	½" NPT Pipe Plug	*	*	2
16	Flapper Valve Assembly – Buna-N	Incl. w/Ref. 21	Incl. w/Ref. 21	1
17	△ Motor	1626-312-00	1626-306-00	1
18	Impeller Lock Nut	1784-001-00	1784-001-00	1
19	Suction Strainer	1679-001-00	1679-001-00	1
20	#10-24 UNC x 3/8" Flat Head Machine Screw	*	*	1
21	Gasket Kit – Buna-N (Includes Ref. Nos. 7 & 16)	3163-300-90	3163-300-90	1

(△) Foot package 1626-040-00 required on these motors.

(*) Standard hardware item, available locally.

Sewage/Trash Pumps

For Repair Parts contact dealer where pump was purchased.

Please provide following information:
-Model Number
-Serial Number (if any)

Part description and number as shown in parts list

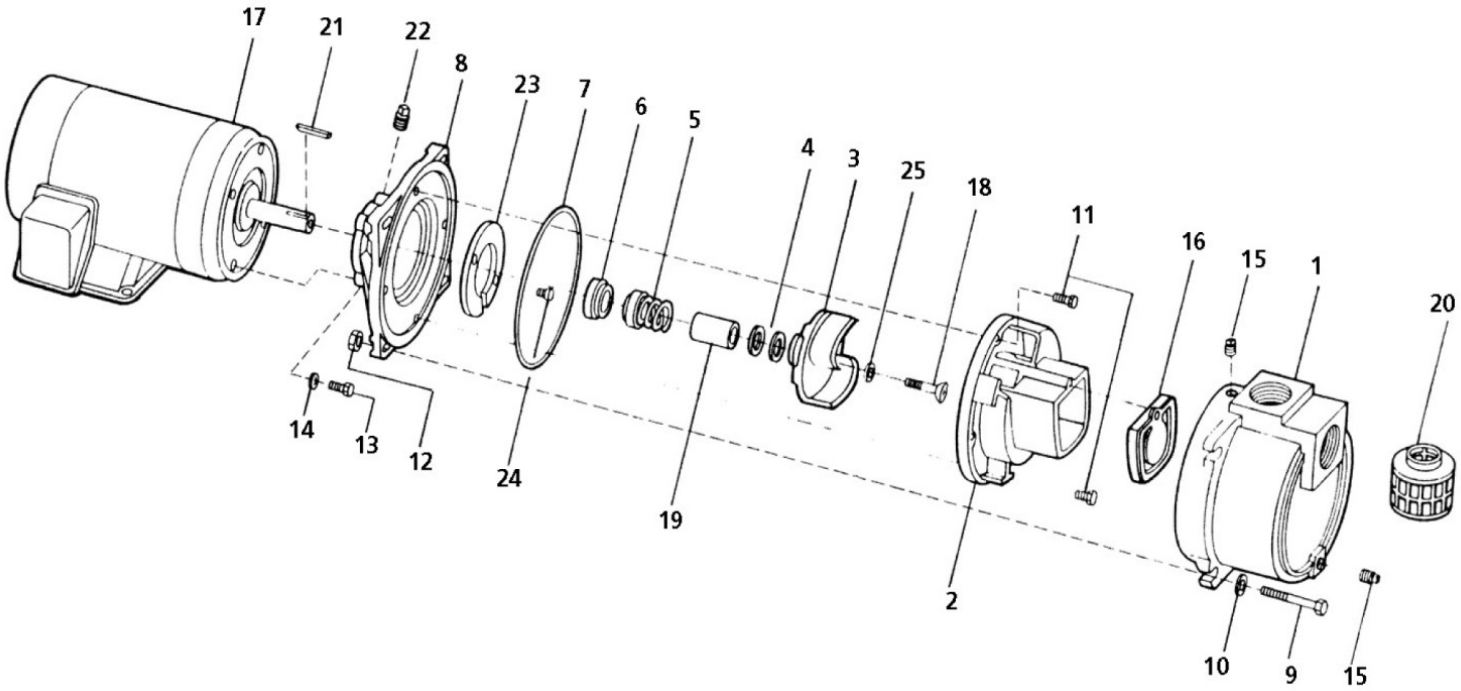

Figure 5 - Repair Parts Illustrations

Repair Parts List

Ref No.	Description	Part Number for Models 393A-95	393B-95	Qty
1	Casing	2112-001-02	2112-001-02	1
2	Volute	2182-002-01	2182-002-01	1
3	Impeller Kit	3935-011-98	3935-011-98	1
	(Includes Ref. Nos. 3, 4, 18, & 21)			
4	Impeller Shim Set	1664-000-90	1664-000-90	1
5 & 6	Seal Assembly – Viton and Silicon Carbide	1640-167-90	1640-167-90	1
7	O-Ring – Buna-N	Incl. w/Ref. 26	Incl. w/Ref. 26	1
8	Adapter	3655-030-01	3655-030-01	1
9	3/8"-16 UNC x 3-1/2" Hex Head Bolt	*	*	4
10	3/8" Flat Washer	*	*	4
11	#10-24 x 7/8" Machine Screw, SS	*	*	2
12	3/8"-16 Hex Nut	*	*	4
13	3/8"-16 x 1-1/4" Hex Head Cap Screw	*	*	4
14	3/8" Helical Split Lock Washer	*	*	4
15	½"-14 NPT Pipe Plug	*	*	2
16	Flapper Valve Assembly – Buna-N	1609-002-00 & Incl. w/Ref. 26	1609-002-00 & Incl. w/Ref. 26	1
17	Motor	1626-352-00	1626-078-00	1
18	Impeller Screw	Incl. w/Ref. 3	Incl. w/Ref. 3	1
19	Shaft Sleeve	1555-140-02	1555-140-02	1
20	Suction Strainer	1679-001-00	1679-001-00	1
21	Impeller Key	1471-030-00 & Incl. w/Ref. 3	1471-030-00 & Incl. w/Ref. 3	1
22	1/8” Pipe Plug	*	*	1
23	Wear Plate	3655-032-01	3655-032-01	1
24	5/16"-18 x ½" Flat Head Machine Screw	*	*	2
25	O-Ring – Buna-N	Incl. w/Ref. 26	Incl. w/Ref. 26	1
26	Gasket Kit – Buna-N	393A-300-90	393A-300-90	1
	(Includes Ref. Nos. 7, 16, & 25)			

NOTE: When replacing a seal assembly, a new O-ring (Ref. No. 25) should be also replaced.

(*) Standard hardware item, available locally.

Sewage/Trash Pumps

For Repair Parts contact dealer where pump was purchased.

Please provide following information:
-Model Number
-Serial Number (if any)

Part description and number as shown in parts list

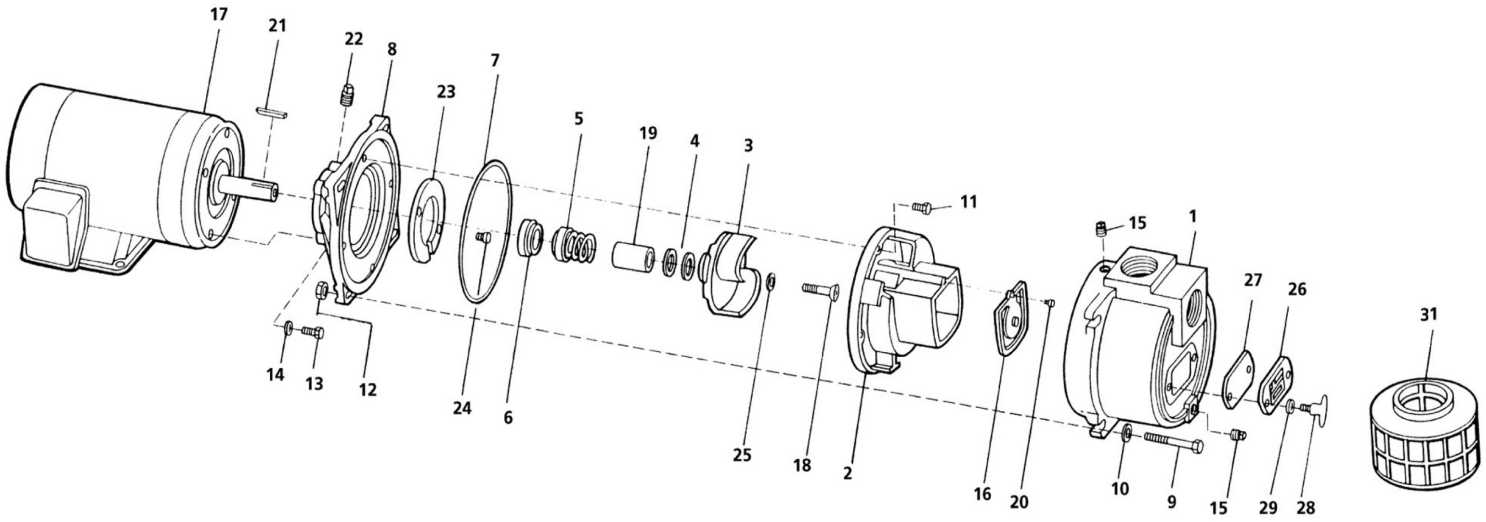

Figure 6 - Repair Parts Illustrations

Repair Parts List

Ref No.	Description	Part Number for Models 394A-95	394B-95	Qty
1	Casing	2113-003-01	2113-003-01	1
2	Volute	2184-002-01	2184-002-01	1
3	Impeller Kit	394A-010-98	394A-010-98	1
	(includes Ref. Nos. 3, 4, 18, & 21)			
4	Impeller Shim Set	1664-000-90	1664-000-90	1
5 & 6	Seal Assembly – Viton and Silicon Carbide	1640-167-90	1640-167-90	1
7	O-Ring – Buna-N	Incl. w/Ref. 30	Incl. w/Ref. 30	1
8	Adapter	1990-031-01	1990-031-01	1
9	1/2"-13 x 4-3/4" Hex Bolt	*	*	4
10	½" Flat Washer	*	*	4
11	1/4"-20 x 7/8" Hex Screw (stainless steel)	*	*	2
12	1/2"-13 Hex Nut	*	*	4
13	3/8"-16 x 1-1/4" Hex Screw	*	N/A	4
13	1/2"-13 x 1-1/2" Hex Screw	N/A	*	4
14	3/8" Helical Spring Lock Washer	*	N/A	4
14	½" Helical Spring Lock Washer	N/A	*	4
15	3/4"-14 NPT Pipe plug	*	*	2
16	Flapper Valve Assembly – Neoprene	3590-070-90	3590-070-90	1
17	Motor	1626-353-00	1626-079-00	1
18	Impeller Screw	Incl. w/Ref. 3	Incl. w/Ref. 3	1
19	Shaft Sleeve	1555-140-02	1555-140-02	1
20	#10-24 x 3/8" Flat Head Machine Screw	*	*	1
21	Impeller Key	1471-030-00	1471-030-00	1
22	1/8”-27 Pipe Plug	*	*	1
23	Wear Plate	2182-004-01	2182-004-01	1
24	5/16"-18 x ½" Flat Head Machine Screw	*	*	2
25	O-Ring – Buna-N	Incl. w/Ref. 30	Incl. w/Ref. 30	1
26	Clean Out Cover	2115-002-01	2115-002-01	1
27	Clean Our Gasket – Neoprene	2115-003-00	2115-003-00	1
28	Clean Out Handle	1601-000-00	1601-000-00	2
29	3/8” Flat Washer	*	*	2
30	Gasket Kit – Buna-N	394A-300-90	394A-300-90	1
	(Includes Ref. Nos. 7, 16, 25, & 27)			
31	Suction Strainer	1681-000-00	1681-000-00	1

NOTE: When replacing a seal assembly, a new O-ring (Ref. No. 25) should be also replaced.

(*) Standard hardware item, available locally.

Sewage/Trash Pumps

For Repair Parts contact dealer where pump was purchased.

Please provide following information:
-Model Number
-Serial Number (if any)

Part description and number as shown in parts list

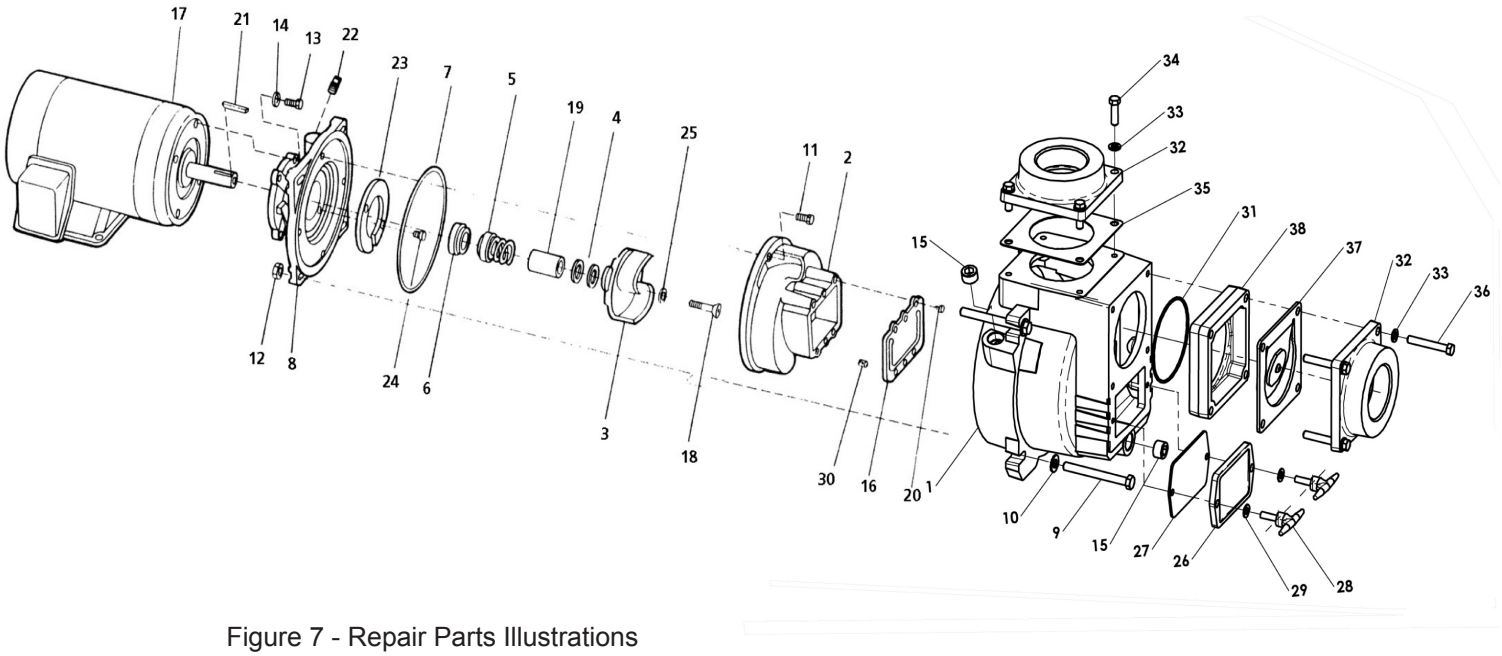

Figure 7 - Repair Parts Illustrations

Repair Parts List

Ref No.	Description	Part Number for Models 394E-95 394F-95	399C-95	Qty
1	Casing Kit	399C-002-95	399C-002-95	1
	(includes Ref. Nos. 1, 9, 10, 12, & 15)			
2	Volute Kit	399C-150-95	399C-150-95	1
	(includes Ref. Nos. 2 & 11)			
3	Impeller Kit	394C-010-98	399A-010-98	1
	(includes Ref. Nos. 3, 4, 18, & 21)			
4	Impeller Shim Set	1664-000-90	1664-000-90	1
5 & 6	Seal Assembly – Viton and Silicon Carbide	1640-167-90	1640-167-90	1
7	O-Ring – Buna-N	Incl. w/Ref. 39	Incl. w/Ref. 39	1
8	Adapter	394B-031-95	394B-031-95	1
	(includes Ref. Nos. 8, 13, 14, 19, 22, 23, & 24)			
9	1/2"-13 x 4-3/4" Hex Bolt	*	*	4
10	½" Flat Washer	*	*	4
11	1/4"-20 x 3/4" Hex Screw (stainless steel)	*	*	2
12	1/2"-13 Hex Nut	*	*	4
13	1/2"-13 x 1-1/2" Hex Screw	*	*	4
14	½" Lock Washer	*	*	4
15	3/4"-14 NPT Pipe plug	Incl. w/Ref. 39	Incl. w/Ref. 39	2
16	Volute Gasket – Buna-N	Incl. w/Ref. 39	Incl. w/Ref. 39	1
17	Motor – 1PH	1626-354-00	N/A	1
	Motor – 3PH	1626-355-00	1626-047-00	1
18	Impeller Screw	1756-004-00	1756-004-00	1
19	Shaft Sleeve	1555-140-02	1555-140-02	1
20	#10-24 x 3/8" Flat Head Machine Screw	*	*	1
21	Impeller Key	1471-030-00	1471-030-00	1
22	1/8” NPT Pipe Plug	*	*	1
23	Wear Plate	399C-060-95	399C-060-95	1
	(includes Ref. Nos. 23 & 24)			
24	5/16"-18 x ½" Flat Head Machine Screw	*	*	2
25	O-Ring – Buna-N	Incl. w/Ref. 39	Incl. w/Ref. 39	1
26	Clean Out Cover/Handle Kit	399C-040-95	399C-040-95	1
	(includes Ref. Nos. 26, 28, & 29)			
27	Clean Our Gasket – Neoprene	Incl. w/Ref. 39	Incl. w/Ref. 39	1
28	Clean Out Handle	Incl. w/Ref. 26	Incl. w/Ref. 26	2
29	3/8” Flat Washer	Incl. w/Ref. 26	Incl. w/Ref. 26	2
30	1/8" Diameter x 3/8" Long Pin	Incl. w/Ref. 26	Incl. w/Ref. 26	4
31	O-Ring – Buna-N	Incl. w/Ref. 39	Incl. w/Ref. 39	1
32	Discharge Flange Kit	394E-080-95	399C-08095	2
	(includes Ref. Nos. 32, 33, & 34)			
33	7/16" Lock Washer	*	*	8
34	7/16"-14 x 1-1/2" Hex Screw	*	*	4
35	Flange Gasket – Neoprene	Incl. w/Ref. 39	Incl. w/Ref. 39	
36	7/16"-14 x 3" Hex Screw	*	*	
37	Check Valve Assembly - Neoprene	399C-070-90	399C-070-90	1
38	Suction Flange Kit	394E-050-95	399C-050-95	1
	(includes Ref. Nos. 32, 33, 36, & 38)			
39	Gasket Kit – Buna-N	399C-300-90	399C-300-90	1
	Gasket Kit – Viton	399C-300-91	399C-300-91	
	(Includes Ref. Nos. 7, 16, 20, 25, 27, 30, 31, & 35)			
40	Suction Strainer (not shown)	1681-000-00	1681-000-00	1

NOTE: When replacing a seal assembly, a new O-ring (Ref. No. 25) should be also replaced.

(*) Standard hardware item, available locally.

10.5 - A3 – ASAHI BALL VALVE

Serial No.	H-V027-E-12

Ball Valve Type 21･21α

Nominal size 15 - 100mm (1/2 - 4")

User's Manual

Contents

(1) Be sure to read the following warranty clauses of our product 1

(2) General operating instructions 2

(3) General instructions for transportation, unpacking and storage 3

(4) Name of parts 4

(5) Working pressure vs. temperature 6

(6) Specification of valve body 7

(7) Specification of limit switch 7

(8) Installation procedure 8

(9) Connection of limit switch procedure 13

(10) Operating procedure 14

(11) Method of adjusting face pressure between ball and seat 14

(12) Disassembling method for replacing parts 15

(13) Mounting actuator, metal ensat and base (Panel) install the locking device 17

(14) Inspection items 19

(15) Troubleshooting 19

(16) Handling of residual and waste materials 19

ASAHI *AV* VALVES

This user's guide contains information important to the proper installation, maintenance and safe use of an ASAHI AV Product. Please store this manual in an easily accessible location.

<Warning & Caution Signs>

Warning	This symbol reminds the user to take caution due to the potential for serious injury or death.
Caution	This symbol reminds the user to take caution due to the potential for damage to the valve if used in such a manner.

<Prohibited & Mandatory Action Signs>

	Prohibited: When operating the valve, this symbol indicates an action that should not be taken.
	Mandatory action: When operating the valve, this symbol indicates mandatory actions that must be adhered to.

(1) Be sure to read the following warranty clauses of our product

- Always observe the specifications of and the precautions and instructions on using our product.
- We always strive to improve product quality and reliability, but cannot guarantee perfection. Therefore, should you intend to use this product with any equipment or machinery that may pose the risk of serious or even fatal injury, or property damage, ensure an appropriate safety design or take other measures with sufficient consideration given to possible problems. We shall assume no responsibility for any inconvenience stemming from any action on your part without our written consent in the form of specifications or other documented approval.
- The related technical documents, operation manuals, and other documentation prescribe precautions on selecting, constructing, installing, operating, maintaining, and servicing our products. For details, consult with our nearest distributor or agent.
- Our product warranty extends for one and a half years after the product is shipped from our factory or one year after the product is installed, whichever comes first. Any product abnormality that occurs during the warranty period or which is reported to us will be investigated immediately to identify its cause. Should our product be deemed defective, we shall assume the responsibility to repair or replace it free of charge.
- Any repair or replacement needed after the warranty period ends shall be charged to the customer.
- The warranty does not cover the following cases:
  (1) Using our product under any condition not covered by our defined scope of warranty.
  (2) Failure to observe our defined precautions or instructions regarding the construction, installation, handling, maintenance, or servicing of our product.
  (3) Any inconvenience caused by any product other than ours.
  (4) Remodeling or otherwise modifying our product by anyone other than us.
  (5) Using any part of our product for anything other than the intended use of the product.
  (6) Any abnormality that occurs due to a natural disaster, accident, or other incident not stemming from something inside our product.

(2) General operating instructions

Warning

- Using a positive-pressure gas with our plastic piping may pose a dangerous condition due to the repellent force particular to compressible fluids even when the gas is under similar pressures used for liquids. Therefore, be sure to take the necessary safety precautions such as covering the piping with protective material. For inquiries, please contact us. For conducting a leak test on newly installed piping, be sure to check for leaks under water pressure. If absolutely necessary to use a gas in testing, please consult your nearest service station beforehand.
- Certain liquid such as H_2O_2, NaClO, etc may be prone to vaporization (Off-Gassing) which may cause irregular pressure increases, which may destroy the valve.

Caution

- Do not step on or apply excessive weight on valve. (It can be damaged.)
- Do not use the valve to fluid containing slurry. (The valve will not operate properly.)
- Do not use the valve in conditions where the fluid may have crystallized. (The valve will not operate properly.)

- Keep the valve away from excessive heat or fire. (It can be damaged, or destroyed.)
- Always operate the valve within the pressure vs. temperature range. (The valve can be damaged or deformed by operating beyond the allowable range.)
- Allow sufficient space for maintenance and inspection.
- Select a valve material that is compatible with the media. For chemical resistance information, refer to "CHEMICAL RESISTANCE ON ASAHI AV VALVE". (Some chemicals may damage incompatible valve materials.)
- Keep the valve out of direct sunlight, water and dust. Use cover to shield the valve. (The valve will not operate properly.)
- Perform periodic maintenance. (Leakage may develop due to temperature changes or periods of prolonged storage, rest, or operation.)

(3) General instructions for transportation, unpacking and storage

- When suspending and supporting a valve, take care and do not stand under a suspended valve.

- This valve is not designed to handle impacts of any kind. Avoid throwing or dropping the valve.
- Avoid scratching the valve with any sharp object.
- Do not over-stack cardboard shipping boxes. Excessively stacked packages may collapse.
- Avoid contact with any coal tar creosote, insecticides, vermicides or paint.
  (These chemicals may cause damage to the valve.)
- When transporting a valve, do not carry it by the handle.

- Store products in their corrugated cardboard boxes. Avoid exposing products to direct sunlight, and store them indoors (at room temperature). Also avoid storing products in areas with excessive temperatures. (Corrugated cardboard packages become weaker as they become wet with water or other liquid. Take care in storage and handling.)
- After unpacking the products, check that they are defect-free and meet the specifications.

(4) Name of parts

Nominal Size: 15-50mm (1/2”-2”)

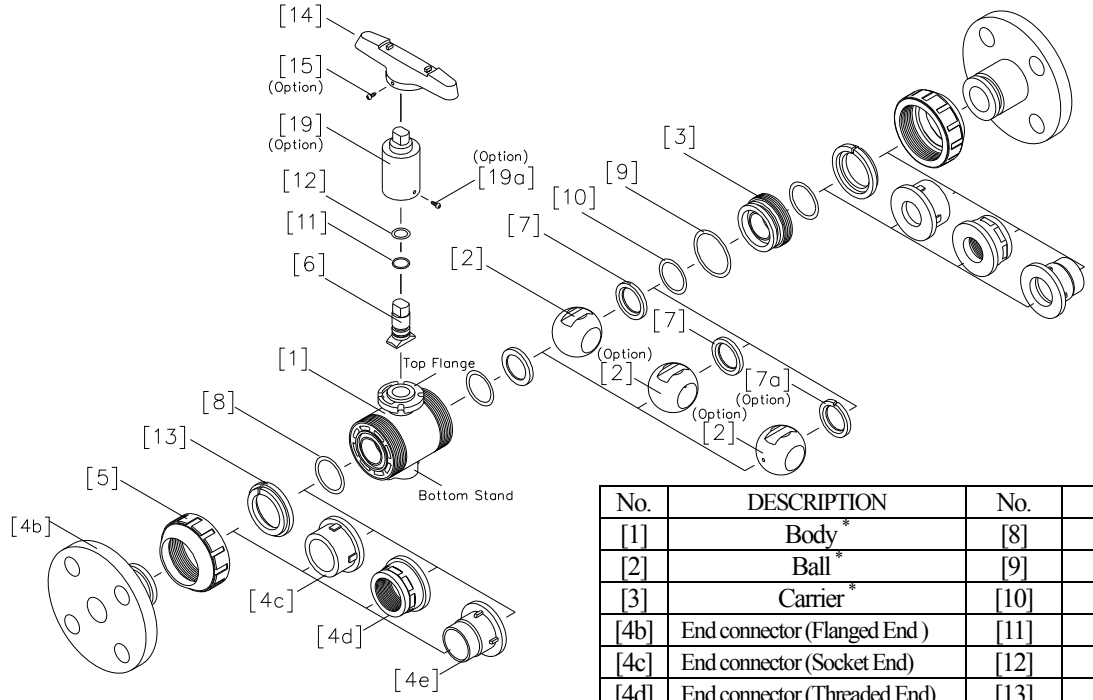

No.	DESCRIPTION	No.	DESCRIPTION
[1]	Body *	[8]	O-ring (A)
[2]	Ball *	[9]	O-ring (B) *
[3]	Carrier *	[10]	O-ring (C) *
[4b]	End connector (Flanged End)	[11]	O-ring (D)
[4c]	End connector (Socket End)	[12]	O-ring (E)
[4d]	End connector (Threaded End)	[13]	Stop ring
[4e]	End connector (Spigot End) *	[14]	Handle
[5]	Union nut	[15]	Tapping screw (A)
[6]	Stem *	[19]	Extension stem
[7]	Seat *	[19a]	Tapping screw (B)
[7a]	Seat (A) *		

*Type21 and 21α have not all same parts to make one complete.
As for details, please consult your nearest service station beforehand.

Nominal Size: 65-100mm (2 1/2”-4”)

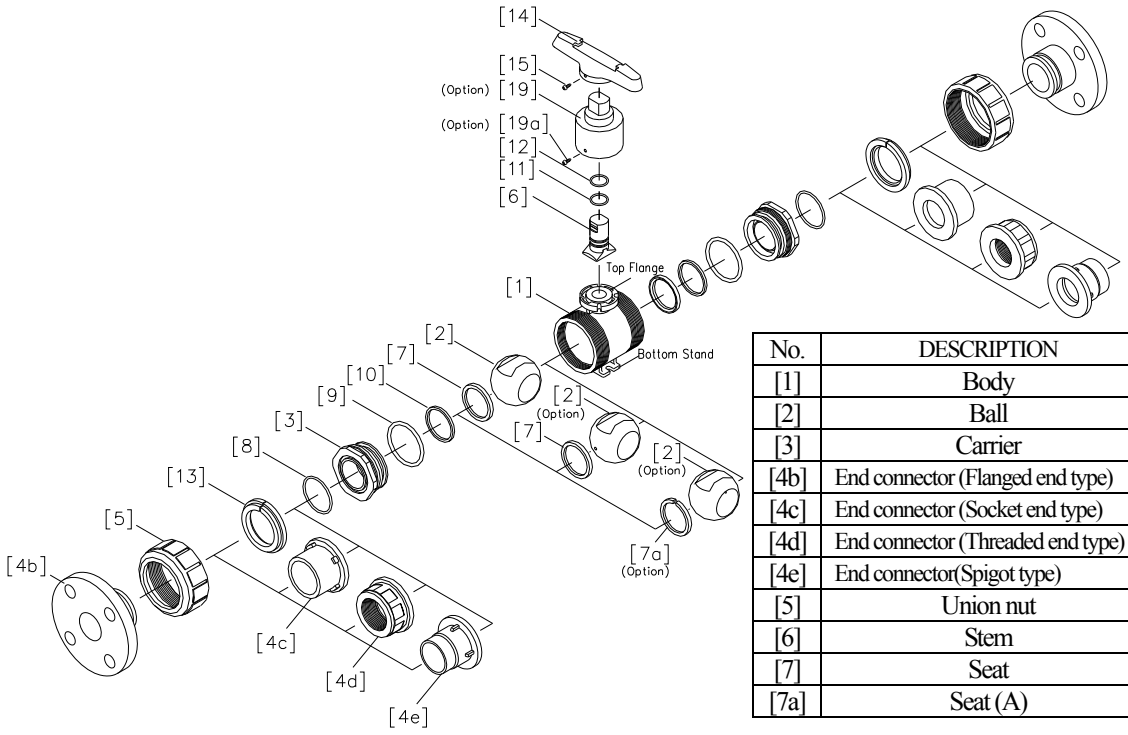

No.	DESCRIPTION	No.	DESCRIPTION
[1]	Body	[8]	O-ring (A)
[2]	Ball	[9]	O-ring (B)
[3]	Carrier	[10]	Cushion
[4b]	End connector (Flanged end type)	[11]	O-ring (C)
[4c]	End connector (Socket end type)	[12]	O-ring (D)
[4d]	End connector (Threaded end type)	[13]	Stop ring
[4e]	End connector(Spigot type)	[14]	Handle
[5]	Union nut	[15]	Tapping screw (A)
[6]	Stem	[19]	Extension stem
[7]	Seat	[19a]	Tapping screw (B)
[7a]	Seat (A)		

Nominal Size: 15-100mm (1/2”-4”) with Limit Switch (Option)

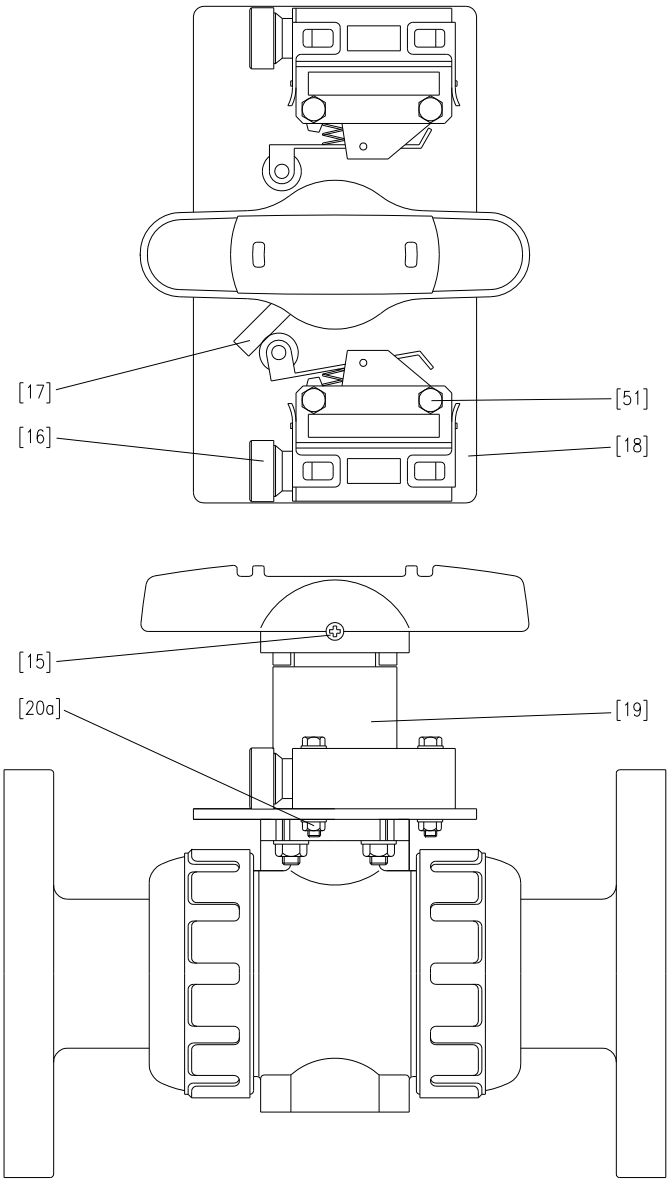

No.	DESCRIPTION	No.	DESCRIPTION
[15]	Tapping screw (A)	[19]	Extension stem
[16]	Limit switch	[20a]	Bolt･Nut(A)
[17]	Limit switch rod	[51]	Bolt･Nut (F)
[18]	Bracket (A)		

(5) Working pressure vs. temperature

Nominal size: 15mm - 50mm (1/2" - 2")

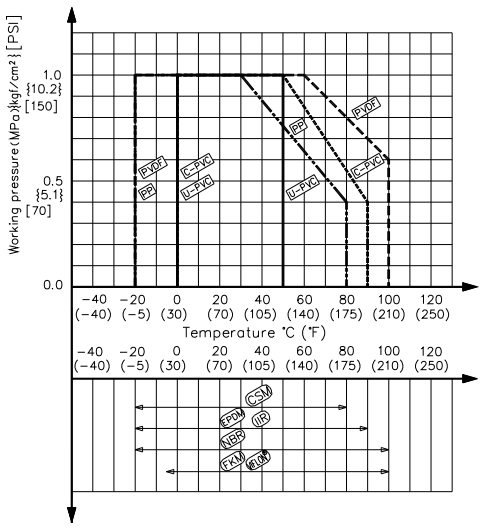

Nominal size: 65mm (2 1/2")

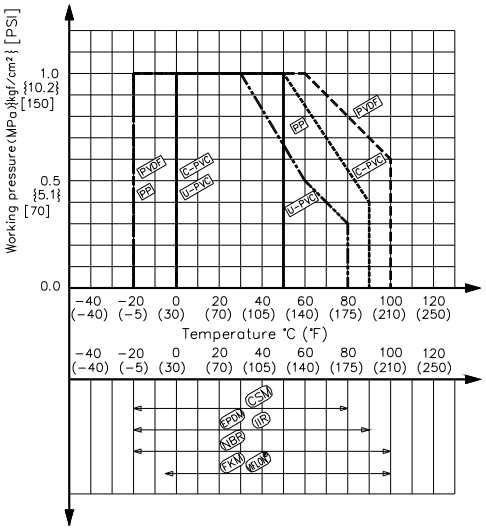

Nominal size: 80mm, 100mm (3", 4")

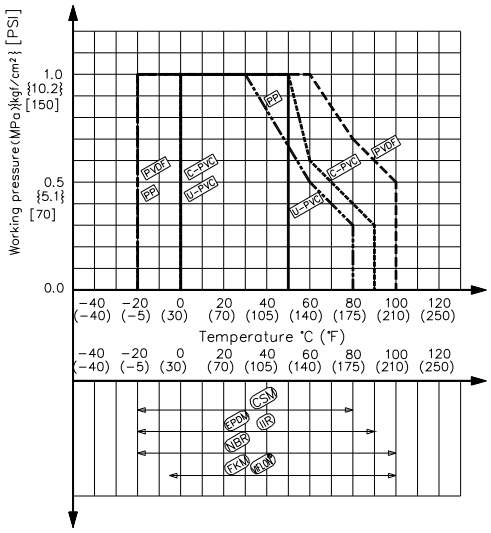

(6) Specification of valve body

*Specification of Type 21 & Type 21α

Nominal size	Body material			
	PVC	C-PVC	PP	PVDF
15-50mm (1/2"-2")	Type21α		Type21	
65-100mm (2 1/2"-4")				

(7) Specification of limit switch (option)

Nominal Size	Type Code	Protection Grade
15 - 100mm (1/2 - 4")	SL1-P	IP67

Limit Switch Rating

Rate Voltage (V)	Resistive Load (A)	Inductive Load (A)
AC125	5	3
AC250	5	3
DC8	5	3
DC14	5	3
DC30	5	3
DC115	0.5	0.1
DC230	0.25	0.05

Connection Diagram

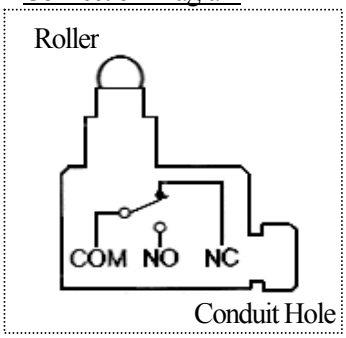

(8) Installation procedure

Warning

- When suspending and supporting a valve, take care and do not stand under a suspended valve.

- Be sure to conduct a safety check on all hand and power tools to be used before beginning work.
- Wear protective gloves and safety goggles as fluid remain in the valve even if the pipeline is empty. (You may be injured.)

Caution

- When installing a pipe support by means of a U-band or something similar, take care not to over-tighten. (Excessive force may damage the pipe.)
- When installing pipes and valves, ensure that they are not subjected to tension, compression, bending, impact, or other excessive stress.
- When installing a piece of equipment at the end of the piping line, be sure to keep the secondary (Downstream) End Connector and Union Nut installed on the valve.
- When installing Ball Valve, 15 to 50 mm (1/2" to 2") at the end, note the direction of flow. (Find the mark ◀ molded on the Carrier-side body. On the secondary (Downstream) side, the Carrier is integral with the valve body. This is the preferred method if installation when installing the equipment at the end of the line for safety purposes.)

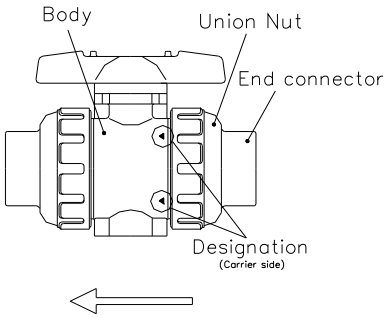

- When installing, disassembling, or reassembling the piping, fix the End Connector.
- Before a water test, be sure that the Union Nut is tightly fastened.
- Fasten the Union Nut while avoiding the parallelism and axial misalignment of the flange surface.
- When connecting an ASAHI AV Valve to metal piping, take care not to let the pipe stress on the ASAHI AV Valve.
- When screwing in a Metal Insert (Ensat), install it vertically. Refer to the User's Manual for Metal Insert (Ensat) by the Maker.
- When loosening the union nut on the union side, fix the body cap (hold it with your hand) and do work. (If the body cap turns, the union will turn together, resulting in the union and ball separating from the body.) If the union is loosened, retighten the union.
- Take care not to over-tighten the Union Nut. (The valve can be damaged.)
- Do not use the pipe wrench. (The valve can be damaged.)

Flanged End (End connector materials: PVC, C-PVC, PP, PVDF,)

Caution
- Use flat faced flanges for connection to AV Valves.
- Ensure that the mating flanges are of the same standards.
- Be sure to use sealing gaskets (AV Gasket), bolts, nuts, and washers and tighten them to specified torques. (When a non-AV gasket is used, a different tightening torque specification should be followed.)

Necessary items
- Torque wrench
- AV gasket
- Spanner wrench
- Bolt, Nut, Washer (For many flanges specification)

Procedure

1) When the union nut [5] flange assembly set was removed or loosen from body [1], O-ring (A) [8] should be installed into carrier and body groove. (In either horizontal or vertical installation, if necessary apply a small amount of lubricant to O-ring to hold in place.) Align union nut and end connector with the body. Insure end connector mates with body and O-ring. Make certain union nut threads onto body smoothly. Tighten union nuts on each side valve until hand tight. Then using a strap wrench tightens union nuts uniformly on each side approx 90° -180° turns, 1/4 to 1/2 turns.
2) Set the AV gasket between the flanges.
3) Insert washers and bolts from the pipe side, insert washers and nuts from the valve side, then temporarily tighten them by hand.

Caution
- The parallelism and axial misalignment of the flange surface should be under the values shown in the following table to prevent damage the valve.
(A failure to observe them can cause destruction due to stress application to the pipe)

Unit : mm (inch)

Nom. Size	Axial Misalignment	Parallelism (a-b)
15-32mm (1/2”-1 1/4”)	1.0mm (0.04”)	0.5mm (0.02”)
40-80mm (1 1/2”-3”)	1.0mm (0.04”)	0.8mm (0.03”)
100mm (4”)	1.0mm (0.04”)	1.0mm (0.04”)

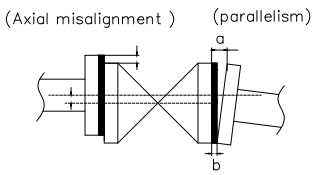

4) Tighten the bolts and nuts gradually with a torque wrench to the specified torque level in a diagonal manner. (Refer to fig.1.)

Caution
- Tighten the bolts and nuts gradually with a torque wrench to the specified torque level in a diagonal manner.

Fig. 1

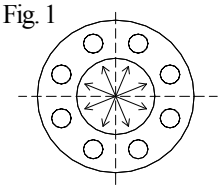

Recommended torque value Unit: N·m{kgf·cm}[lb·inch]

Nom. Size	15-20mm (1/2"-3/4")	25-40mm (1"-1 1/2")	50, 65 mm (2", 2 1/2")	80, 100 mm (3", 4")
PTFE・PVDF coated	17.5{179}[155]	20.0{204}[177]	22.5{230}[230]	30.0{306}[266]
Rubber	8.0 {82} [71]	20.0 {204} [177]	22.5 {230} [230]	30.0 {306} [266]

Threaded End (End connector materials: PVC, C-PVC, PP, PVDF)

Caution

- Avoid excessive tightening. (The valve can be damaged.)
- Make sure that the threaded connections are plastic x plastic. (Metallic thread can cause damage.)
- Wrap the threaded joints on our plastic piping with sealing tape. Using a liquid sealing agent or liquid gasket may cause stress cracks (Environmental Stress Cracking). Our product warranty shall not apply in case of said use, even when said use is unavoidable.

Necessary items

- Sealing tape
- Strap wrench
- Spanner wrench

Procedure

1) Wind a sealing tape around the external thread of joint, leaving the end (about 3mm) free.
2) Loosen the union nut [5] with a strap wrench.
3) Remove the union nut [5] and the end connector [4d].
4) Lead the union nut [5] through the pipe.
5) Tighten the external thread of the joint and the end connector [4d] hardly with hand.
6) Using a spanner wrench, screw in the end connector [4d] by turning 180° -360° carefully without damaging it.
7) Make sure that the O-ring (A) [8] is mounted.
8) Set the end connector [4d] and union nut [5] directly on the body without allowing the O-ring (A) [8] to come off.
9) Tighten union nuts [5] on each valve until hand tight.
10) Using a strap wrench tighten union nuts uniformly on each side approx 90° -180° turns, 1/4 to 1/2 turns.

Socket End (End connector materials: PVC, C-PVC)

Warning
- When using an adhesive, ventilate the space sufficiently, prohibit the use of a fire in the vicinity, and do not inhale adhesive vapors directly.
- If an adhesive gets into contact with your skin, wash it off immediately. If you feel sick or find any anomaly, receive a physician's diagnosis and take appropriate measures promptly.

Caution
- Take care in doing work at low temperatures. Solvent vapors are hard to evaporate and are likely to remain. (Solvent cracks may occur, damaging the equipment.) After assembling the piping system, open both ends of the piping and use a fan (of the Low-Voltage Type) or something similar to ventilate the space, thus removing the solvent vapors.
- Use the appropriate Asahi AV cement.
- Conduct a water test at least 24 hours after joining the pipes with an adhesive/cement.

Necessary items
- Adhesive for hard vinyl chloride pipes
- Strap wrench

Procedure

1) Loosen the union nut [5] with a strap wrench.
2) Remove the union nut [5] and end connector [4c].
3) Lead the union nut through the pipe.
4) Clean the hub part of the end connector [4c] by wiping the waste cloth.
5) Apply adhesive evenly to the hub part of the end connector [4c] and the pipe spigot.

Caution
- Do not apply more adhesive than necessary. (The valve can be damaged due to solvent cracking.)

Adhesive quantity (guideline)

Nom. Size	15mm (1/2")	20mm (3/4")	25mm (1")	32mm (1 1/4")	40mm (1 1/2")	50mm (2")	65mm (2 1/2")	80mm (3")	100mm (4")
Quantity(g)	1.0	1.3	2.0	2.4	3.5	4.8	6.9	9.0	13.0

6) After applying adhesive, insert the pipe quickly to the end connector [4c] and leave it alone for at least 60 seconds.

Caution
- Do not under any circumstances try to insert a pipe into another fitting or valve by striking it, which may break the piping.

7) Wipe away overflowing adhesive.
8) Make sure that O-ring(A) [8] is mounted
9) Set the end connector [4c] and union nut [5] directly on the body without allowing the O-ring (A) [8] to come off.
10) Tighten union nut [5] hardly with hand.
11) Using a strap wrench tighten union nuts uniformly on each side approx 90° -180° turns, 1/4 to 1/2 turns.

Socket End (End connector materials: PP, PVDF)

Necessary items

- Strap wrench
- Sleeve welder or automatic welding machine
- User's manual for sleeve welder or automatic welding machine

Procedure

1) Loosen the union nut with a strap wrench.
2) Remove the union nut [5] and the end connector.
3) Lead the union nut [5] through the pipe.
4) For the next step, refer to the user's manual for the sleeve welder or the automatic welding machine.
5) After welding, make sure that the O-ring (A) [8] is mounted.
6) Set the end connector [4c] and the union nut [5] directly without allowing the O-ring (A) [8] to come off.
7) Tighten union nut [5] hardly with hand.
8) Using a strap wrench tighten union nuts uniformly on each side approx 90° -180° turns, 1/4 to 1/2 turns.

Spigot End (End connector materials: PP, PVDF)

Necessary items

- Strap wrench
- Automatic welding machine
- User's manual for automatic welding machine

Procedure

1) Loosen the union nut with a strap wrench.
2) Remove the union nut [5] and the end connector.
3) Lead the union nut [5] through the pipe.
4) For the next step, refer to the user's manual for the sleeve welder or the automatic welding machine.
5) After welding, make sure that the O-ring (A) [8] is mounted.
6) Set the end connector [4e] and the union nut [5] directly without allowing the O-ring (A) [8] to come off.
7) Tighten union nut [5] hardly with hand.
8) Using a strap wrench tighten union nuts uniformly on each side approx 90° -180° turns, 1/4 to 1/2 turns.

(9) Connection of limit switch procedure (option)

Warning - Shut down the power on the equipment before connecting wires. There are risks of electrical shock depending on the level of operating voltage.

Caution - Connect the cables by using insulated sheathed crimping terminals in such a way as not to contact the cover or housing. (Contact of a crimping terminal with the cover may disable the cover from being closed or may cause a ground fault.)

- Be sure that the terminal cover and body cover are put on during the operation.

Necessary items

- Screw driver (+)
- Screw driver (-)
- Connector (G1/2)
- Wire stripper
- Terminal crimping tool

Procedure

1) Adjust a cable as shown in the figure below. (When installing a crimp style terminal on the lead wire, use crimp style terminals with insulation sleeve (M3) so that, its does not contact the housing and other crimp style terminals.)

Details of connection

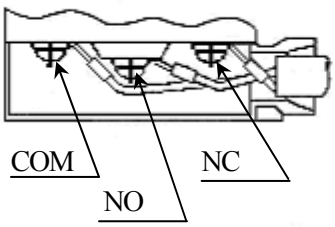

Details of cable

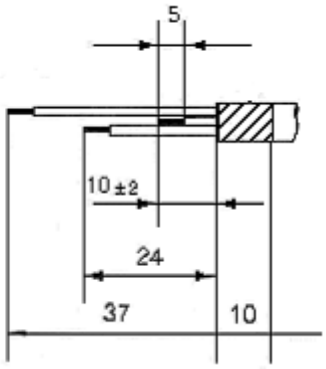

2) Remove the terminal cover from the housing by using a screw driver (-)

3) Draw a cable through each part as shown in the figure below.

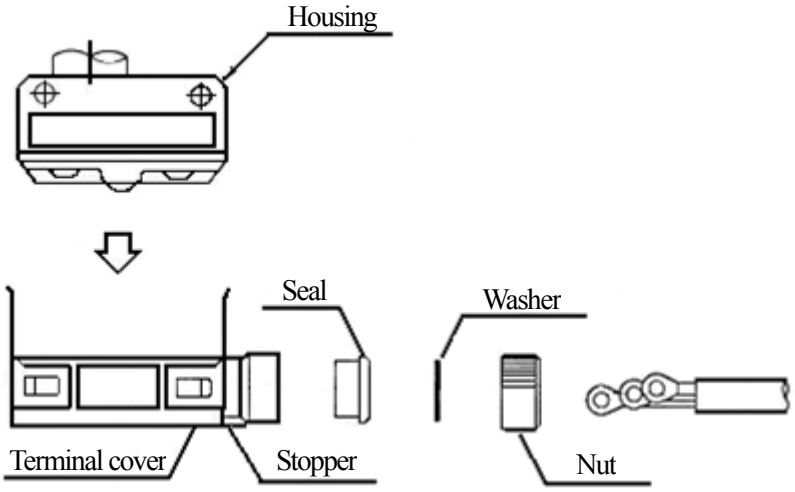

4) Connect the crimp style terminal to the terminal board with a screw driver

5) Attach the terminal cover to the housing.

6) Set the seal and washer, and tighten the nut to the terminal cover.

(10) Operating procedure

Caution
- Do not exert excessive force in closing the valve.
- Do not use the valve to fluid containing slurry. (The valve will not operate properly.)
- The installed valve must never be opened or closed when foreign matter such as sand is present in the pipeline.
- When operating the handle, be sure to do so with your hand. (Using a tool may damage the handle.)
- Before opening or closing a lubricant free product, be sure to apply water.

○ Turn the handle gently to open or close.
(Turn the handle clockwise to close and counter clockwise to open.)

Fully closed ····· The position of the handle should be perpendicular to the pipe.

Fully opened ····· The position of the handle should be parallel to the pipe.

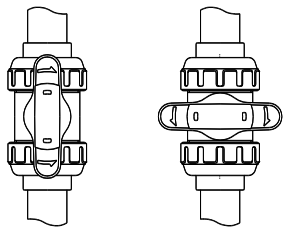

Fully opened Fully closed

(11) Method of adjusting face pressure between ball and seat

Caution
- Take care not to over-tighten the Union Nut. (The valve can be damaged.)
- Do not use the pipe wrench. (The valve can be damaged.)

Necessary items
- Strap wrench
- Protective gloves
- Safety goggles
- Screwdriver (+) (only with nominal size 65-100mm)

Procedure

1) Completely discharge fluid from pipes.
2) Turn the handle to full close.
3) Loosen the right union nut and the left one [5] with a strap wrench.
4) Remove the body part from piping system.

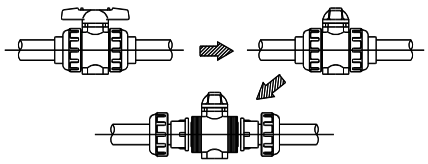

Caution
- If you do work with the piping installed, drain the piping of all its fluid. Some fluid will remain in the valve. Therefore wear protective goggles and protective gloves.
(You may otherwise get injured.)

5) Pull the handle off the body part.
As for nominal size 65-100mm (2 1/2"-4"), loosen the screw [15] properly with a screwdriver before pulling it off.
6) Engage the upper convex part of the handle with the concave part of the union [3].
As for nominal size 15-50mm Only the union [3] on the right side when viewed from the trademark (AV mark) can be adjusted.
As for nominal size 65-100mm adjust the unions on both sides.
7) Male an adjustment by turning the union [3] clockwise or counter clockwise.
- Tighten the union
Ball Valve Type 21: Clockwise
Ball Valve Type 21α: Counter clockwise
- Loosen the union
Ball Valve Type 21: Counter clockwise
Ball Valve Type 21α: Clockwise
8) Make sure that the handle can be operated smoothly.
9) Assemble the valve by following the above procedure in the reverse order, starting at 6)

Ball valve **type 21**

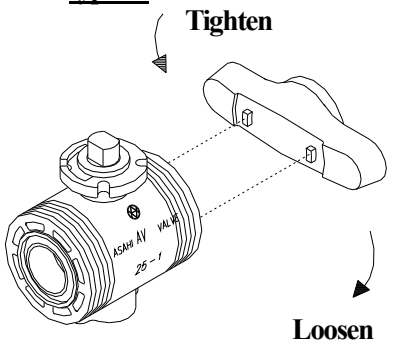

Ball valve **type 21α**

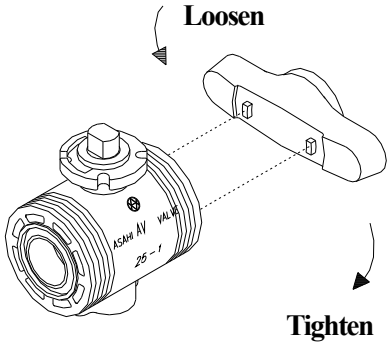

(12) Disassembling method for replacing parts

Warning
- Be sure to conduct a safety check on all hand and power tools to be used before beginning work.
- Wear protective gloves and safety goggles as fluid remain in the valve even if the pipeline is empty. (You may be injured.)
- Do not change or replace valve parts under line pressure.

Caution
- Take care not to over-tighten the Union Nut. (The valve can be damaged.)
- Do not use the pipe wrench. (The valve can be damaged.)
- When installing, disassembling, or reassembling the piping, fix the End Connector.
- Before a water test, be sure that the Union Nut is tightly fastened.
- Fasten the Union Nut while avoiding the parallelism and axial misalignment of the flange surface.
- When connecting an ASAHI AV Valve to metal piping, take care not to let the pipe stress on the ASAHI AV Valve.
- Ball valve type 21・21α has the case of incompatible for a part of parts. (parts: Body[1], Ball[2], Carrier[3], Stem[6], Seat[7])

Necessary items
- Strap wrench
- Protective gloves
- Safety goggles

Caution
- If you do work with the piping installed, drain the piping of all its fluid. Some fluid will remain in the valve. Therefore wear protective goggles and protective gloves. (You may otherwise get injured.)

<Disassembly>

Procedure

1) Completely discharge fluid from pipes.
2) Turn the handle to full close.
3) Loosen the right union nut and the left one [5] with a strap wrench.
4) Remove the body part from piping system.
5) Pull the handle off the body part.
   Engage the upper convex part of the handle with the concave part of the union.
6) In the engaged state, turn the handle [14] counter clockwise to loosen it and remove the union [3].
7) Remove the seat [7] carefully by hand without damaging it.
8) Push out the ball [2] by hand.
9) Push out the stem [6] from the top flange side to the body side.

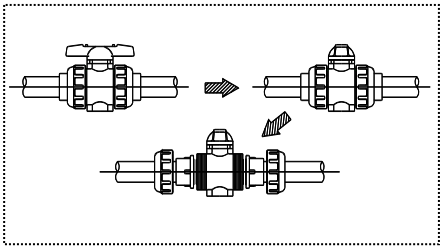

Ball valve **type 21**

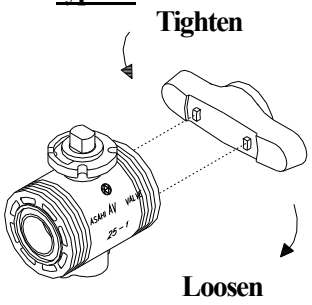

Ball valve **type 21α**

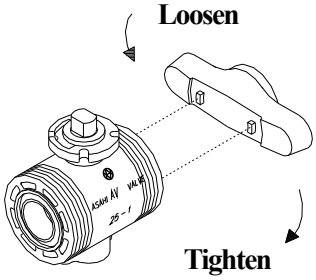

Caution

- As for nominal size 15-50mm. Only the carrier on the right side when viewed from the trademark (AV mark) can be adjusted.
  As for nominal size 65-100mm, adjust the carriers on both sides.

<Assembly>

Procedure

Carry out the assembly work in the reverse procedure from item 10)

Caution

- Before assembling PTFE seat in to the carrier, check the seat for seat face to touch the boll.

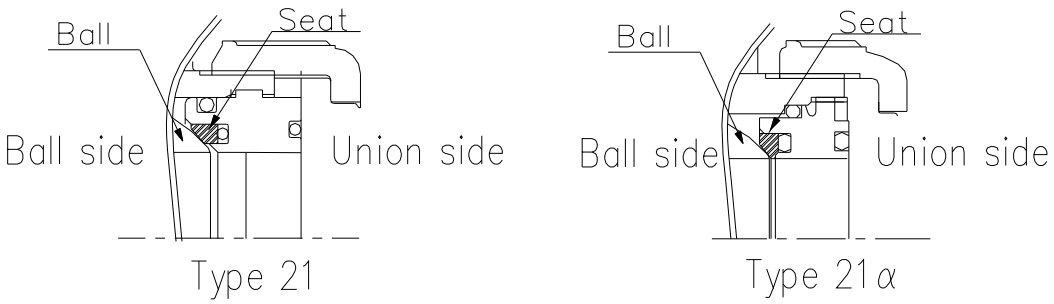

(13) Mounting actuator, metal ensat and base (Panel), install the locking device

○ Attach actuator to the top flange

Procedure

1) Remove the handle [14].
   As for nominal 65mm-100mm, tighten the screw [15] properly before removing it.

2) Fix the stand [24] to actuator [23] with bolt (A).

3) Fix the stem [6] to the joint [25] with screw (B) [28].

4) Engage the joint [25] with actuator [23].

5) Fix the stand [24] to the top flange with bolt-nut (B) [27].

6) Make sure that the valve works smoothly, by operating actuator [23] by hand.

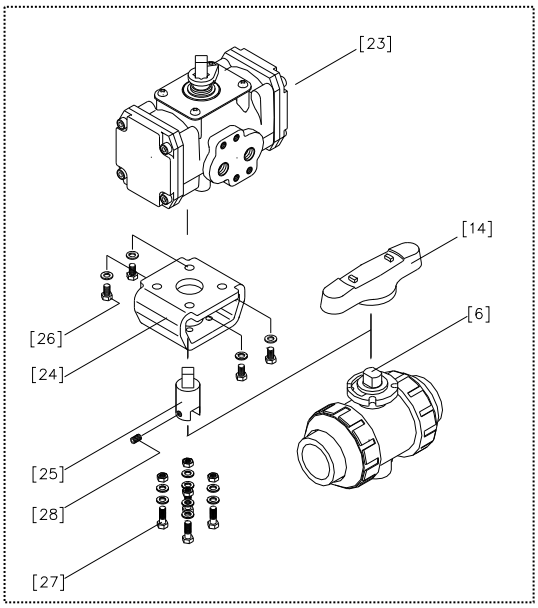

○ Attach Inserted metal to the bottom stand.

Caution - When screwing in a Metal Insert (Ensat), install it vertically. Refer to the User's Manual for Metal Insert (Ensat) by the Maker.

Procedure

Refer to the user's manual for the Inserted metal (Commercially available.)

Bottom stand dimension Unit; mm

Nom. Size		S1	S2	S3
15mm	(1/2")	19	7.3	11
20mm	(3/4")	19	7.3	11
25mm	(1")	19	7.3	11
32mm	(1 1/4")	30	9	15
40mm	(1 1/2")	30	9	15
50mm	(2")	30	9	15
65mm	(2 1/2")	48	9	6
80mm	(3")	55	11	7
100mm	(4")	65	11	8

Nominal 15-50mm(1/2"-2")
Bottom stand

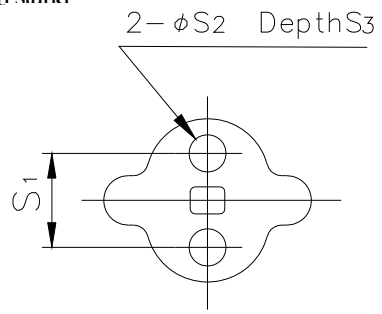

Nominal 65-100mm (2 1/2"- 4")
Bottom stand

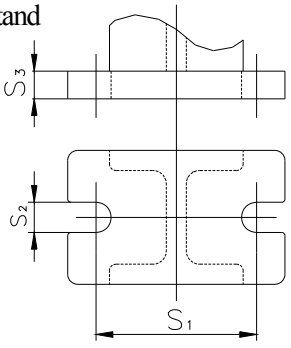

○ Fixation of bottom stand with panel

Nominal size: 15mm-50mm (1/2”-2”)

Before the fixation

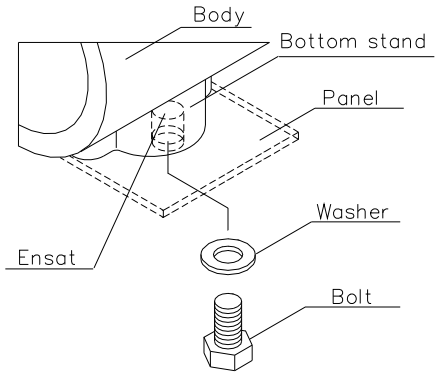

After the fixation

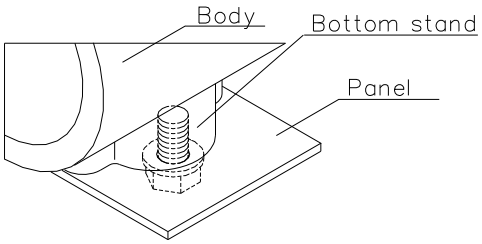

Nominal size: 65mm-100mm (2 1/2”-4”)

Before the fixation

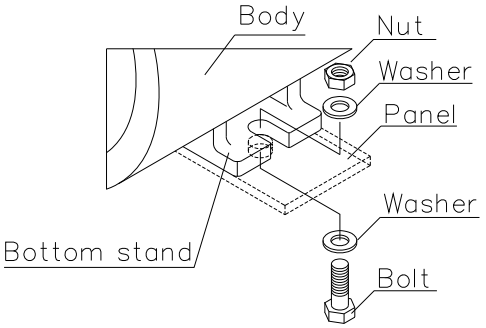

After the fixation

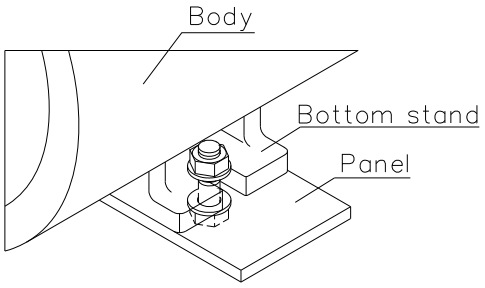

○ Installation Procedure of the Locking Device

The handle lock can be done by full-open (close). Refer to the User’s manual for Locking Device (Option).

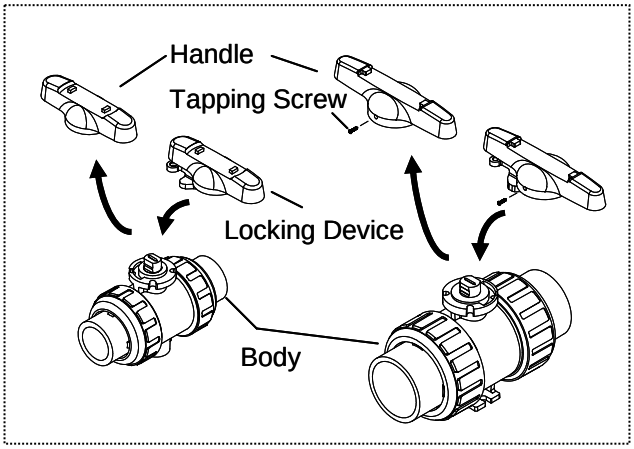

The location hole for the lock is already installed in the handle. (Table 1)

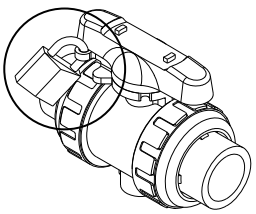

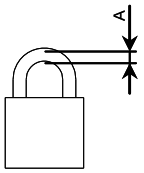

Table 1 <Size of Key>

Nominal Size mm (inch)	**A** mm (inch)
15-25 ($^1/_2$-1”)	5 (0.20”)
32-50 (1 $^1/_4$-2”)	6 (0.24”)
65-100 (2 $^1/_2$-4”)	7 (0.28”)

(14) Inspection items

Caution - Perform periodic maintenance. (Leakage may develop due to temperature changes or over periods of prolonged storage, rest or operation.)

○Inspect the following items.

(1)	Check for any flaw, cracks, or deformation on the outside.
(2)	Check whether fluid leaks to the outside.
(3)	Check whether the cap nut has been loosened.
(4)	Check whether the handle can be operated smoothly.

(15) Troubleshooting

Problem	Cause	Treatment
Fluid leaks from the valve even when the valve is closed fully.	The carrier is loosened.	Adjust the face pressure between the ball and the seat. (Refer to page 14)
	The seat is scratched or worn.	Replace the seat with a new one.
	Foreign matter is in the valve.	Clean up.
	The ball is scratched or worn.	Replace the scratched ball with a new one.
Fluid leaks from the valve.	The union nut is loosened.	Tighten up the union nut.
	The carrier is loosened.	Adjust the face pressure between the ball and the seat. (Refer to page 14)
	The O-ring is scratched or worn.	Replace the O-ring with a new one.
The handle can not be turned smoothly.	Foreign matter is in the valve.	Clean up.
	Deformation. (By heat etc.)	Replace the parts.
	The carrier is tightening too much.	Adjust the face pressure between the ball and the seat. (Refer to page 14)
The handle fails to engage.	The stem is broken.	Replace the stem with a new one.
	The engagement between the stem and the ball is broken.	Replace the stem and ball with new ones.

(16) Handling of residual and waste materials

Warning - Make sure to consult a waste treatment dealer for recommendations on the proper disposal of plastic valves. (Poisonous gas is generated when the valve is burned improperly.)

Ball Valve Type 21・21α

ASAHI *AV* VALVES

Distributor

Asahi Organic Chemicals Industry's homepage http://www.asahi-yukizai.co.jp/en/

Information in this manual is subject to change without notice. 2012.01

10.6 - A4 – ASCO SOLENOID VALVE

Installation & Maintenance Instructions

2–WAY INTERNAL PILOT–OPERATED SOLENOID VALVES
NORMALLY CLOSED OPERATION — GENERAL SERVICE
1″, 1¼″ OR 1½″ NPT

SERIES
8210
8211

NOTICE: See separate solenoid installation and maintenance instructions for information on: Wiring, Solenoid Temperature, Cause of Improper Operation, Coil or Solenoid Replacement.

DESCRIPTION

Series 8210 valves are 2–way normally closed internal pilot–operated solenoid valves designed for general service. Valves are made of rugged forged brass or die cast stainless steel. Series 8210 valves are provided with a general purpose solenoid enclosure. Series EF8210 and 8211 are the same as Series 8210 except they are provided with an explosionproof or explosionproof/watertight solenoid enclosure.

OPERATION

Normally Closed: Valve is closed when solenoid is de–energized; open when energized.

IMPORTANT: Minimum operating pressure differential is 5 psi.

Manual Operator (optional feature)

Manual operator allows manual operation when desired or during an electrical power outage. To engage manual operator (open the valve), turn lever clockwise until it hits a stop. Valve will now be in the same position as when the solenoid is energized. To disengage manual operator (close the valve), turn lever counterclockwise until it hits a stop.

To engage, turn lever clockwise until it hits a stop.

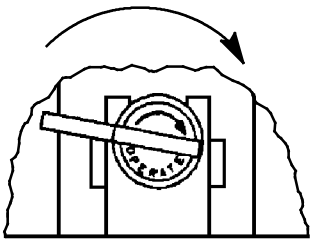

Partial view of Manual Operator

⚠ **CAUTION: For valve to operate electrically, manual operator lever must be fully rotated counterclockwise.**

INSTALLATION

Check nameplate for correct catalog number, pressure, voltage, frequency, and service. Never apply incompatible fluids or exceed pressure rating of the valve. Installation and valve maintenance to be performed by qualified personnel.

Future Service Considerations

Provision should be made for performing seat leakage, external leakage, and operational tests on the valve with a nonhazardous, noncombustible fluid after disassembly and reassembly.

Temperature Limitations

For maximum valve ambient and fluid temperatures, refer to chart below. Check catalog number prefix and watt rating on nameplate.

Watt Rating AC/DC	Catalog Number Prefix	Solenoid Class	Maximum Ambient Temp.	Maximum Fluid Temp.
6 AC	None or DF	F	122°F (50°C)	180°F (82°C)
	HT	H	140°F (60°C)	180°F (82°C)
6.1 AC	None, KF, SF or SC	F	125°F (54° C)	180°F (82°C)
	HT, KH, ST or SU	H	140°F (60°C)	180°F (82°C)
11.2 DC	None or HT	F or H	77°F (25°C)	150°F (65°C)
11.6 DC	None, HT, KF, KH, SC, SF or ST	F or H	104°F (40°C)	150°F (65°C)

Positioning

This valve is designed to perform properly when mounted in any position. However, for optimum life and performance, the solenoid should be mounted vertically and upright to reduce the possibility of foreign matter accumulating in the solenoid base sub–assembly area.

Piping

Connect piping to valve according to markings on valve body. Apply pipe compound sparingly to male pipe threads only. If applied to valve threads, the compound may enter the valve and cause operational difficulty. Avoid pipe strain by properly supporting and aligning piping. When tightening the pipe, do not use valve or solenoid as a lever. Locate wrenches applied to valve body or piping as close as possible to connection point.

⚠ **CAUTION: To protect the solenoid valve, install a strainer or filter suitable for the service involved in the inlet side as close to the valve as possible. Clean periodically depending on service conditions. See ASCO Series 8600 and 8601 for strainers.**

MAINTENANCE

⚠ **WARNING: To prevent the possibility of death, serious injury or property damage, turn off electrical power, depressurize valve, and vent fluid to a safe area before servicing the valve.**

NOTE: It is not necessary to remove the valve from the pipeline for repairs.

All Rights Reserved.

©ASCO Valve, Inc.® 50 Hanover Road, Florham Park, New Jersey 07932 www.ascovalve.com

Cleaning

All solenoid valves should be cleaned periodically. The time between cleanings will vary depending on the medium and service conditions. In general, if the voltage to the coil is correct, sluggish valve operation, excessive noise or leakage will indicate that cleaning is required. In the extreme case, faulty valve operation will occur and the valve may fail to open or close. Clean strainer or filter when cleaning the valve.

Preventive Maintenance

- Keep medium flowing through the valve as free from dirt and foreign material as possible.
- Periodic exercise of the valve should be considered if ambient or fluid conditions are such that corrosion, elastomer degradation, fluid contamination build up, or other conditions that could impede solenoid valve shifting are possible. The actual frequency of exercise necessary will depend on specific operating conditions. A successful operating history is the best indication of a proper interval between exercise cycles.
- Depending on the medium and service conditions, periodic inspection of internal valve parts for damage or excessive wear is recommended. Thoroughly clean all parts. If parts are worn or damaged, install a complete rebuild kit.

Causes of Improper Operation

- **Incorrect Pressure:** Check valve pressure. Pressure to valve must be within range specified on nameplate.
- **Excessive Leakage:** Disassemble valve and clean all parts. If parts are worn or damaged, install a complete ASCO Rebuild Kit.

Valve Disassembly

1. Disassemble valve in an orderly fashion using exploded views for identification and placement of parts. Refer to Figure 1 for AC construction; Figure 2 for DC construction. For 1″ or 1 ¼″ NPT valve construction, see Figure 1; for 1 ½″ NPT valve construction, see Figure 2.
2. Remove solenoid enclosure. See separate instructions.

- For valves supplied with optional manual operators, see section on ***Disassembly of Manual Operator***.

3. Unscrew solenoid base sub–assembly from valve body. Then remove core assembly with core spring and solenoid base gasket. For AC construction (Figure 1) core spring is a loose piece.
4. For normal maintenance (cleaning) it is not necessary to remove the valve seat. However, for valve seat removal use a 7/16″ thin wall socket wrench
5. Remove bonnet screws, valve bonnet, diaphragm spring, diaphragm assembly, body gasket, body passage eyelet (present on current valve constructions only) and body passage gasket.
6. All parts are now accessible for cleaning or replacement. If parts are worn or damaged, install a complete ASCO Rebuild Kit.

– Service Notice –

When installing a new ASCO Rebuild Kit, please be aware that the diaphragm assembly may not be identical to the diaphragm assembly in the valve. See Figure 1 for alternate diaphragm constructions. The two diaphragm constructions are interchangeable and will perform equally well.

⚠ CAUTION: To ensure proper valve operation, install all parts supplied in ASCO Rebuild Kit. Do not mix old and new parts.

Valve Reassembly

1. Lubricate body gasket, body passage gasket, bonnet gasket and solenoid base gasket with DOW CORNING® 200 Fluid lubricant or an equivalent high–grade silicone fluid.
2. Install body passage gasket, body passage eyelet, diaphragm assembly, diaphragm spring, valve bonnet and bonnet screws. Hand thread screws as far as possible. Then torque bonnet screws in a crisscross manner to 144 ± 15 in–lbs [16,3 ± 1,7 Nm].
3. If removed, install valve seat in valve body. Apply a small amount of thread compound compatible with valve media to valve seat threads. Torque valve seat to 75 ± 10 in–lbs [8,5 ± 1,1 Nm].

- For valves supplied with optional manual operator, see section on ***Reassembly of Manual Operator***.

4. For AC construction (Figure 1), install core spring in core assembly. Wide end of core spring in core first, closed end protrudes from top of core.
5. Install solenoid base gasket, core assembly with core spring and solenoid base sub–assembly in valve body. Torque solenoid base sub–assembly to 175 ± 25 in–lbs [19,8 ± 2,8 Nm].
6. Install solenoid. See separate instructions.

⚠ WARNING: To prevent the possibility of death, serious injury or property damage, check valve for proper operation before returning to service. Also perform internal seat and external leakage tests with a nonhazardous, noncombustible fluid.

7. Restore line pressure and electrical power supply to valve.
8. After maintenance is completed, operate the valve a few times to be sure of proper operation. A metallic *click* indicates the solenoid is operating.

Disassembly of Manual Operator

1. Unscrew solenoid base sub–assembly from manual operator body.
2. Unscrew manual operator body from valve body. Then remove stem retainer from base of manual operator body and stem/spacer sub–assembly.
3. Pull stem/spacer sub–assembly with stem gasket from side of manual operator body. Then remove core assembly with core spring, solenoid base gasket and manual operator bonnet gasket.
4. For further disassembly refer to section on ***Valve Disassembly*** step 4.

Reassembly of Manual Operator

1. Lubricate stem gasket with DOW CORNING® 111 Compound lubricant or an equivalent high–grade silicone grease.
2. For AC construction (Figure 1), install core spring in core assembly. Wide end of core spring in core first, closed end protrudes from top of core.
3. Holding the manual operator body in a horizontal position, install core assembly with core spring from the bottom end.
4. Insert the stem/spacer sub–assembly with the stem gasket into the side hole of the manual operator body. Rotate the lever of the stem/spacer sub–assembly to the 12 o'clock position.
5. Install stem retainer on base of manual operator body and simultaneously engage it into the slot provided on the stem/spacer sub–assembly.

IMPORTANT: The spacer on the stem/spacer sub–assembly *must be inside* of the stem retainer for AC construction (Figure 1) and *outside* of the stem retainer for DC construction (Figure 2).

6. Install manual operator bonnet gasket and body with preassembled parts into valve body. Torque manual operator body to 175 ± 25 in–lbs [19,8 ± 2,8 Nm].
7. Replace solenoid base gasket and solenoid base sub–assembly. Torque solenoid base sub–assembly to 175 ± 25 in–lbs [19,8 ± 2,8 Nm].
8. For further reassembly, refer to ***Valve Reassembly*** step 6.

©ASCO Valve, Inc.® 50 Hanover Road, Florham Park, New Jersey 07932 www.ascovalve.com

Torque Chart

Part Name	Torque Value Inch–Pounds	Torque Value Newton–Meters
Solenoid base sub–assembly	175 ± 25	19,8 ± 2,8
Manual operator body		
Bonnet screw	144 ± 15	16,3 ± 1,7
Valve seat	75 ± 10	8,5 ± 1,1

ORDERING INFORMATION FOR ASCO REBUILD KITS

Parts marked with an asterisk (*) in the exploded view are supplied in Rebuild Kits. When Ordering Rebuild Kits for ASCO valves, order the Rebuild Kit number stamped on the valve nameplate. If the number of the kit is not visible, order by indicating the number of kits required, and the Catalog Number and Serial Number of the valve(s) for which they are intended.

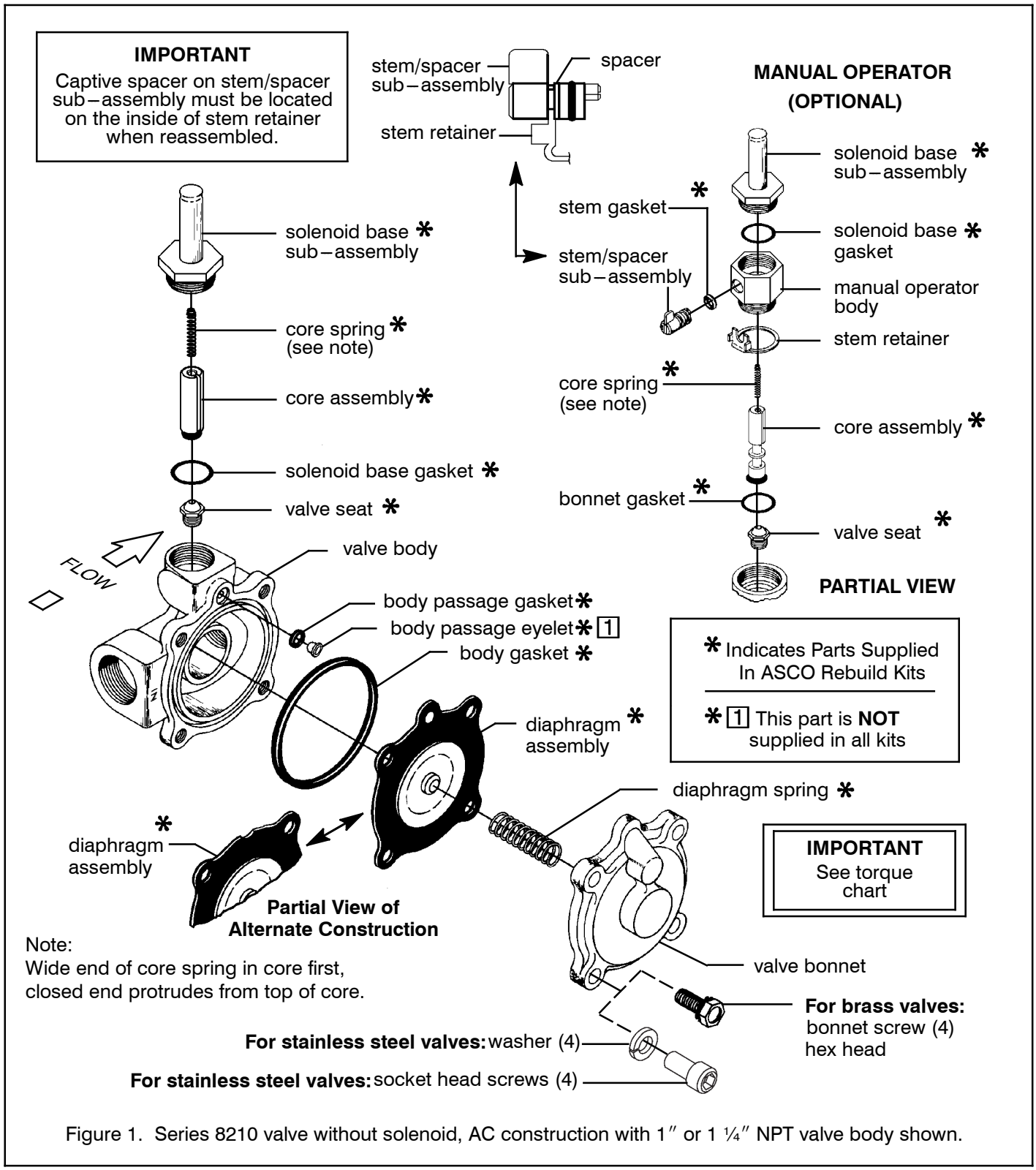

Figure 1. Series 8210 valve without solenoid, AC construction with 1″ or 1 ¼″ NPT valve body shown.

©ASCO Valve, Inc.® 50 Hanover Road, Florham Park, New Jersey 07932 www.ascovalve.com

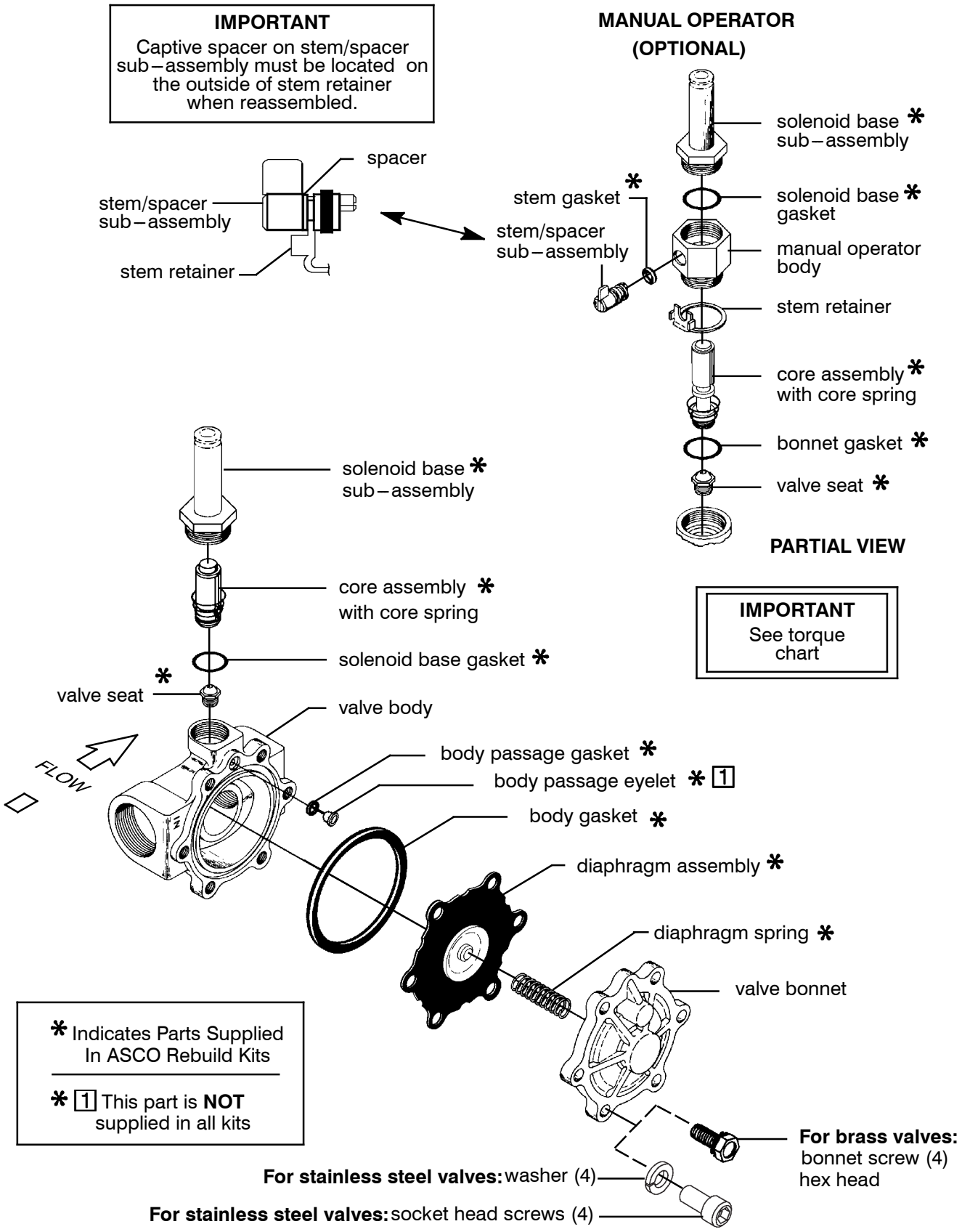

Figure 2. Series 8210 valve without solenoid, DC construction with 1 ½″ NPT valve body shown.

©ASCO Valve, Inc.® 50 Hanover Road, Florham Park, New Jersey 07932 www.ascovalve.com

10.7 - B1 – BURKERT SOLENOID VALVE

bürkert
FLUID CONTROL SYSTEMS

Type 0142
Magnetventil

2/2-Way Solenoid Valve
2/2-Wege-Magnetventil
Électrovanne à 2/2 voies

Operating Instructions
Bedienungsanleitung
Manuel d'utilisation

Address / Adresse
Germany / Deutschland / Allemagne
Bürkert Fluid Control Systems
Sales Center
Christian-Bürkert-Str. 13-17
D-74653 Ingelfingen
Tel. + 49 (0) 7940 - 10 91 111
Fax + 49 (0) 7940 - 10 91 448
E-mail: info@de.buerkert.com

International
www.burkert.com → Bürkert → Company → Locations

Manuals and data sheets on the Internet:
www.burkert.com
Bedienungsanleitungen und Datenblätter im Internet:
www.buerkert.de
Manuel d'utilisation et fiches techniques sur Internet :
www.buerkert.fr

© 2013 Bürkert Werke GmbH

Operating Instructions 1307/04_EU-ml_00893140 / Original DE

MAN 1000010221 ML Version: F Status: RL (released | freigegeben) printed: 11.05.2016

english

1. OPERATING INSTRUCTIONS

The operating instructions contain important information.
- Read the instructions carefully and follow the safety instructions in particular, and also observe the operating conditions.
- Instructions must be available to each user.
- The liability and warranty for Type 0142 are void if the operating instructions are not followed.

2. SYMBOLS

→ designates a procedure which you must carry out.

Warning of serious or fatal injuries:

DANGER!
In case of imminent danger.

WARNING!
In case of potential danger.

Warning of minor or moderately severe injuries:

CAUTION!

Warns of damage to property:

NOTE!

3. INTENDED USE

Non-authorized use of the solenoid valve type 0142 may be a hazard to people, nearby equipment and the environment.
- The device is designed to control, shut off and meter neutral and aggressive media up to a viscosity of 21 mm²/s.
- Provided the cable plug is connected and installed correctly, e.g. Bürkert type 2508, the device satisfies protection class IP65 in accordance with DIN EN 60528 / IEC 60529.
- Use according to the permitted data, operating conditions and conditions of use specified in the contract documents and operating instructions. These are described in the chapter entitled "Technical data".
- Correct transportation, correct storage and installation and careful use and maintenance are essential for reliable and problem-free operation.
- Use the device only as intended.

3.1. Restrictions

If exporting the system/device, observe any existing restrictions.

4. BASIC SAFETY INSTRUCTIONS

These safety instructions do not make allowance for any contingencies and events which may arise during installation, operation and maintenance.

Danger – high pressure!
- Before loosening the lines and valves, turn off the pressure and vent the lines.

Risk of electric shock!
- Before reaching into the system, switch off the power supply and secure to prevent reactivation!
- Observe applicable accident prevention and safety regulations for electrical equipment.

Risk of burns/Risk of fire if used continuously through hot device surface!
- Keep the device away from highly flammable substances and media and do not touch with bare hands.

Risk of injury due to malfunction of valves with alternating current (AC).

Sticking core causes coil to overheat, resulting in a malfunction.
- Monitor process to ensure function is in perfect working order.

Risk of short-circuit/escape of media through leaking screw joints.
- Ensure seals are seated correctly.
- Carefully screw valve and connection lines together.

To prevent injury, ensure that:
- Do not make any external modifications to the device bodies. The system cannot be activated unintentionally.
- Installation and repair work may be carried out by authorized technicians only and with the appropriate tools.
- After an interruption in the power supply or pneumatic supply, ensure that the process is restarted in a defined or controlled manner.
- Do not put any loads on the body.
- The device may be operated only when in perfect condition and in consideration of the operating instructions.

english

5. TECHNICAL DATA

5.1. Operating conditions

The following values are indicated on the type label:
- Voltage (Tolerance ± 10 %) / Current type
- Coil power consumption (active power in W - at operating temp.)
- Pressure range
- Body material
  PVC (PV) or PVDF (PD)
- Seal material
  FKM, EPDM

Protection class: IP65 with accordance with DIN EN 60529 / IEC 60529 with cable plug, e. g. Bürkert Type 2508

Operating principle:

A (NC) 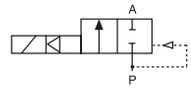

2/2-way valve, normally closed

B (NO) 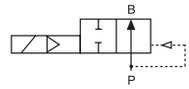

2/2-way valve, normally opened

5.2. Application conditions

Ambient temperature: PVC 0 - +40 °C
PVDF 0 - +55 °C

Permitted medium temperature depending on body material:

Body material	Medium temperature
PVC	0 °C ... +50 °C
PVDF	0 °C ... +70 °C

Pressure - Temperature Diaphragm for PVC and PVDF:

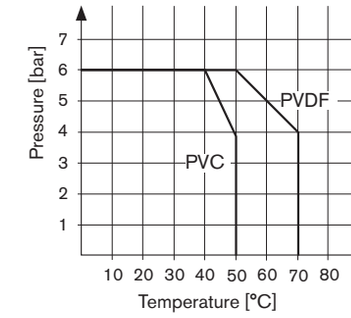

Permitted media depending on seal material:

Seal material	Permitted media
FKM	Oxidizing acids and substances, water
EPDM	Alkalis, alkaline washing and bleaching lyes, water, oil- and grease-free media

Operating duration

Unless otherwise indicated on the type label, the solenoid system is suitable for continuous operation.

Important information for functional reliability during continuous operation!
If standstill for a long period at least 1-2 activations per day are recommended.

Service life

High switching frequency and high pressures reduce the service life.

5.3. Conformity

In accordance with the EC Declaration of conformity, the solenoid valve Type 0142 is compliant with the EC Directives.

5.4. Standards

The applied standards, which verify conformity with the EC Directives, can be found on the EC Type Examination Certificate and / or the EC Declaration of Conformity.

5.5. Type label

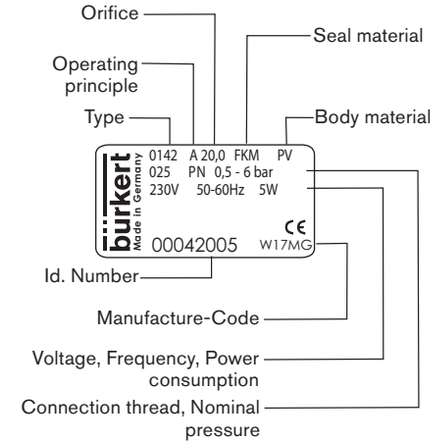

6. INSTALLATION

6.1. Safety instructions

DANGER!

Risk of injury from high pressure in the equipment!
- Before loosening the lines and valves, turn off the pressure and vent the lines.

Risk of injury due to electrical shock!
- Before reaching into the system, switch off the power supply and secure to prevent reactivation!
- Observe applicable accident prevention and safety regulations for electrical equipment!

WARNING!

Risk of injury from improper installation!
- Installation may be carried out by authorized technicians only and with the appropriate tools!

Risk of injury from unintentional activation of the system and an uncontrolled restart!
- Secure system from unintentional activation.
- Following installation, ensure a controlled restart.

6.2. Before installation

Installation position: any, actuator preferably upwards.

Procedure:

→ Check pipelines for dirt and clean.

→ Install a dirt filter before the valve inlet (≤ 500 µm).

6.3. Installation

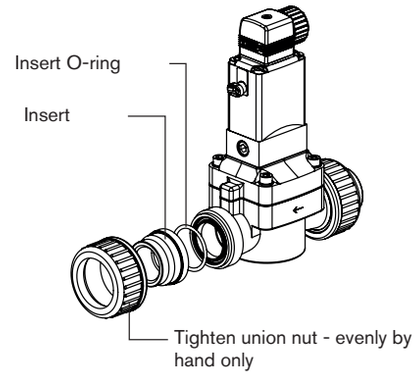

MAN 1000010221 ML Version: F Status: RL (released | freigegeben) printed: 11.05.2016

NOTE!

Caution risk of breakage!
- Do not use the coil as a lifting arm.

→ Body with welded sleeve: Use PVDF.

→ Body with bonded sleeves: Use Tangit special adhesive.

Valve body must not be installed under tension.

→ Observe direction of flow:
The arrow on the body indicates the direction of flow (no function in opposite flow direction).

6.4. Manual emergency actuation

CAUTION!

Discharge of medium due to loss of the O-rings!
- If the O-rings are lost, the valve will leak. Medium may be discharged.

NOTE!

Caution!
- When the manual emergency actuation is locked, the valve can no longer be actuated electrically.

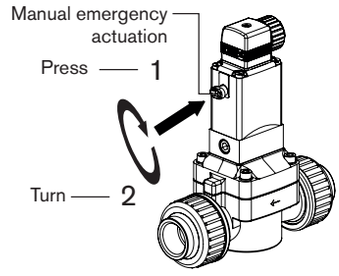

6.5. Electrical connection of the cable plug

WARNING!

Risk of injury due to electrical shock!
- Before reaching into the device / equipment switch off the power supply and secure to prevent reactivation!
- Observe applicable accident prevention and safety regulations for electrical equipment!

If the protective conductor contact between the coil and body is missing, there is danger of electrical shock!
- Always connect protective conductor.
- Check electrical continuity between coil and body.

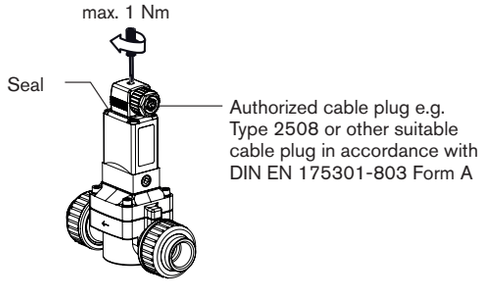

Note the voltage and current type as specified on the type label.

Procedure:

→ Tighten cable plug (for permitted types see data sheet), observing max. torque 1 Nm.

→ Check that seal is fitted correctly.

→ Connect protective conductor and check electrical continuity between coil and body.

6.5.1. Electrical connection - Pulse

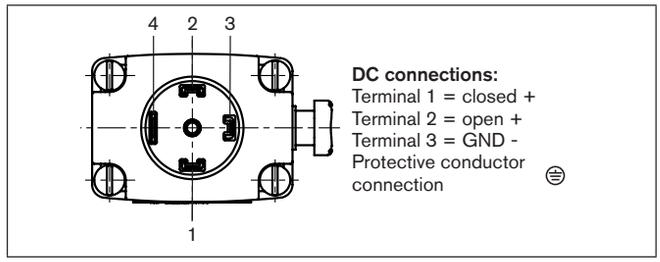

The connection terminals in the cable plug are identified with the numbers 1 to 3 according to the terminals on the valve.

Procedure:

→ Connect the pulse valves (variable code CF 02).

→ For direct current versions connect negative terminal to terminal 3.

NOTE!

Important information:
- Avoid emitting pulses simultaneously to both coil windings.
- Do not switch any other consumers (relays, etc.) at the same time as the terminals.
- The coil connection, to which voltage is not applied, must be galvanically isolated (open).
- If two or more valves are switched in parallel, ensure that this requirement is met by using 2-pole or multi-pole switches.

7. MAINTENANCE, TROUBLESHOOTING

7.1. Safety instructions

WARNING!

Risk of injury from improper maintenance!
- Maintenance may be carried out by authorized technicians only and with the appropriate tools!

Risk of injury from unintentional activation of the system and an uncontrolled restart!
- Secure system from unintentional activation.
- Following maintenance, ensure a controlled restart.

7.2. Malfunctions

If malfunctions occur, check:

→ the device has been installed according to the instructions,

→ the electrical and fluid connections are correct,

→ the device is not damaged,

→ all screws have been tightened,

→ the voltage and pressure have been switched on,

→ the pipelines are clean.

MAN 1000010221 ML Version: F Status: RL (released | freigegeben) printed: 11.05.2016

Valve does not switch

Possible cause:

- Short-circuit or coil interrupted.
- Medium pressure outside the permitted pressure range.
- Manual emergency actuation locked.

Valve does not close

Possible cause:

- Internal space of the valve is dirty.
- Manual emergency actuation locked.
- Flow restrictor (valve inlet) or pilot holes (valve inlet / outlet) dirty.

8. SPARE PARTS

CAUTION!

Risk of injury and/or damage by the use of incorrect parts!

Incorrect accessories and unsuitable spare parts may cause injuries and damage the device and the surrounding area.

- Use only original accessories and original spare parts from Bürkert.

8.1. Ordering spare parts

Order the spare-part sets specifying the positions (Pos. 1: Pilot control set, Pos. 2: Wearing part set) and the identification number of the device.

8.2. Overview of spare parts

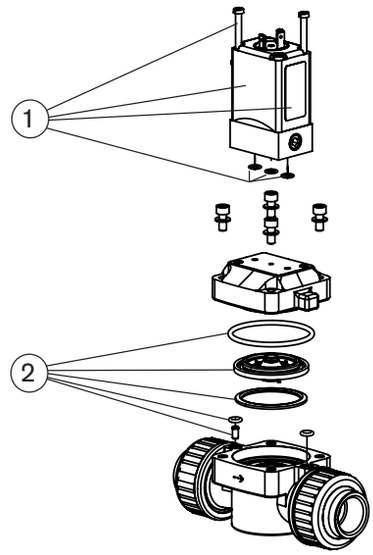

9. TRANSPORT, STORAGE, DISPOSAL

NOTE!

Transport damages!

Inadequately protected equipment may be damaged during transport.

- During transportation protect the device against wet and dirt in shock-resistant packaging.
- Avoid exceeding or dropping below the allowable storage temperature.
- Protect electrical interfaces of the coil and the pneumatic connections from damage with protective caps.

Incorrect storage may damage the device.

- Store the device in a dry and dust-free location!
- Storage temperature: -10 °C ... +50 °C (PVC)
  -10 °C ... +70 °C (PVDF).

Damage to the environment caused by device components contaminated with media.

- Observe applicable regulations on disposal and the environment.

english

MAN 1000010221 ML Version: F Status: RL (released | freigegeben) printed: 11.05.2016

1. DIE BEDIENUNGSANLEITUNG

Die Bedienungsanleitung enthält wichtige Informationen.

- Die Bedienungsanleitung sorgfältig lesen und Hinweise zur Sicherheit beachten.
- Anleitung muss jedem Benutzer zur Verfügung stehen.
- Die Haftung und Gewährleistung für Typ 0142 entfällt, wenn die Anweisungen der Bedienungsanleitung nicht beachtet werden.

2. DARSTELLUNGSMITTEL

→ markiert einen Arbeitsschritt den Sie ausführen müssen.

Warnung vor schweren oder tödlichen Verletzungen:

GEFAHR!
Bei unmittelbarer Gefahr.

WARNUNG!
Bei möglicher Gefahr.

Warnung vor leichten oder mittelschweren Verletzungen:

VORSICHT!

Warnung vor Sachschäden:

HINWEIS!

3. BESTIMMUNGSGEMÄSSER GEBRAUCH

Bei nicht bestimmungsgemäßem Einsatz des Magnetventils Typ 0142 können Gefahren für Personen, Anlagen in der Umgebung und die Umwelt entstehen.

- Das Gerät ist zum Steuern, Absperren und Dosieren von neutralen und aggressiven Medien bis zu einer Viskosität von 21 mm²/s konzipiert.
- Mit einer sachgemäß angeschlossenen und montierten Gerätesteckdose, z. B. Bürkert Typ 2508 erfüllt das Gerät die Schutzart IP65 nach DIN EN 60529 / IEC 60529.
- Für den Einsatz die in den Vertragsdokumenten und der Bedienungsanleitung spezifizierten zulässigen Daten, Betriebs- und Einsatzbedingungen beachten. Diese sind im Kapitel „Technische Daten“ beschrieben.
- Voraussetzungen für den sicheren und einwandfreien Betrieb sind sachgemäßer Transport, sachgemäße Lagerung und Installation sowie sorgfältige Bedienung und Instandhaltung.
- Das Gerät nur bestimmungsgemäß einsetzen.

3.1. Beschränkungen

Beachten Sie bei der Ausfuhr des Systems/Geräts gegebenenfalls bestehende Beschränkungen.

4. GRUNDLEGENDE SICHERHEITSHINWEISE

Diese Sicherheitshinweise berücksichtigen keine Zufälligkeiten und Ereignisse, die bei Montage, Betrieb und Wartung auftreten können.

Gefahr durch hohen Druck!

- Vor dem Lösen von Leitungen oder Ventilen den Druck abschalten und Leitungen entlüften.

Gefahr durch elektrische Spannung!

- Vor Eingriffen in das Gerät oder die Anlage, Spannung abschalten und vor Wiedereinschalten sichern!
- Die geltenden Unfallverhütungs- und Sicherheitsbestimmungen für elektrische Geräte beachten!

Verbrennungsgefahr/Brandgefahr bei Dauerbetrieb durch heiße Geräteoberfläche!

- Das Gerät von leicht brennbaren Stoffen und Medien fernhalten und nicht mit bloßen Händen berühren.

Verletzungsgefahr durch Funktionsausfall bei Ventilen mit Wechselspannung (AC)!

Festsitzender Kern bewirkt Spulenüberhitzung, die zu Funktionsausfall führt.

- Arbeitsprozess auf einwandfreie Funktion prüfen.

Kurzschlussgefahr/Austritt von Medium durch undichte Verschraubungen!

- Auf einwandfreien Sitz der Dichtung achten.
- Ventil und Anschlussleitungen sorgfältig verschrauben.

Zum Schutz vor Verletzungen/Sachschaden beachten:

- An Typ 0142 keine inneren oder äußeren Veränderungen vornehmen. Anlage/Gerät vor unbeabsichtigter Betätigung sichern.
- Installations- und Instandhaltungsarbeiten dürfen nur von autorisiertem Fachpersonal mit geeignetem Werkzeug ausgeführt werden.
- Nach einer Unterbrechung der elektrischen oder pneumatischen Versorgung ist ein definierter oder kontrollierter Wiederanlauf des Prozesses zu gewährleisten.
- Gehäuse nicht mechanisch belasten.
- Die allgemeinen Regeln der Technik einhalten.

5. TECHNISCHE DATEN

5.1. Betriebsbedingungen

Folgende Werte sind auf dem Typschild angegeben:

- Spannung (Toleranz ± 10 %) / Stromart
- Spulenleistung (Wirkleistung in W - betriebswarm)
- Druckbereich
- Gehäusewerkstoff
  PVC (PV) oder PVDF (PD)
- Dichtwerkstoff
  FKM, EPDM

Schutzart: IP65 nach DIN EN 60529 / IEC 60529 mit sachgemäß angeschlossener und montierter Gerätesteckdose, z. B. Bürkert Typ 2508

Wirkungsweise:

A (NC) 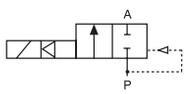

2/2-Wege Ventil, stromlos geschlossen

B (NO) 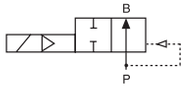

2/2-Wege Ventil, stromlos geöffnet

5.2. Einsatzbedingungen

Umgebungstemperatur: PVC 0 bis +40 °C
PVDF 0 bis +55 °C

Zulässige Mediumstemperatur in Abhängigkeit von Gehäusewerkstoff:

Gehäusewerkstoff	Mediumstemperatur
PVC	0 °C ... +50 °C
PVDF	0 °C ... +70 °C

Druck - Temperatur Diagramm für PVC und PVDF:

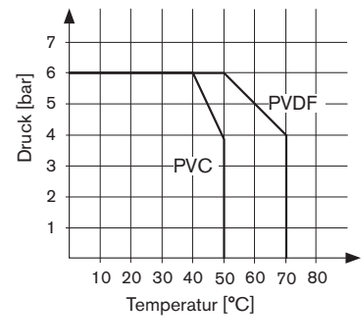

MAN 1000010221 ML Version: F Status: RL (released | freigegeben) printed: 11.05.2016

Zulässige Medien in Abhängigkeit von Dichtwerkstoff:

Dichtwerkstoff	Zulässige Medien
FKM	Oxidierende Säuren und Substanzen, Wasser
EPDM	Alkalien, alkalische Wasch- und Bleichlaugen, Wasser, öl- und fettfreie Medien

Betriebsdauer

Wenn auf dem Typschild nicht anders angegeben, ist das Magnetsystem für Dauerbetrieb geeignet.

Wichtiger Hinweis für die Funktionssicherheit bei Dauerbetrieb!
Bei langem Stillstand wird eine Mindestbetätigung von 1-2 Schaltungen pro Tag empfohlen.

Lebensdauer

Hohe Schaltfrequenz und hohe Drücke verringern die Lebensdauer.

5.3. Konformität

Das Magnetventil, Typ 0142 ist konform zu den EG-Richtlinien entsprechend der EG-Konformitätserklärung.

5.4. Normen

Die angewandten Normen, mit denen die Konformität mit den EG-Richtlinien nachgewiesen wird, sind in der EG-Baumusterprüfbescheinigung und/oder der EG-Konformitätserklärung nachzulesen.

5.5. Typschild

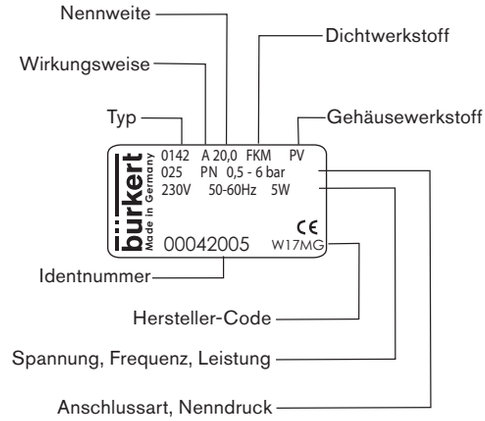

deutsch

6. MONTAGE

6.1. Sicherheitshinweise

GEFAHR!

Verletzungsgefahr durch hohen Druck in der Anlage!
- Vor dem Lösen von Leitungen oder Ventilen den Druck abschalten und Leitungen entlüften.

Verletzungsgefahr durch Stromschlag!
- Vor Eingriffen in das Gerät oder die Anlage, Spannung abschalten und vor Wiedereinschalten sichern!
- Die geltenden Unfallverhütungs- und Sicherheitsbestimmungen für elektrische Geräte beachten!

WARNUNG!

Verletzungsgefahr bei unsachgemäßer Montage!
- Die Montage darf nur autorisiertes Fachpersonal mit geeignetem Werkzeug durchführen!

Verletzungsgefahr durch ungewolltes Einschalten der Anlage und unkontrollierten Wiederanlauf!
- Anlage vor unbeabsichtigtem Betätigen sichern.
- Nach der Montage einen kontrollierten Wiederanlauf gewährleisten.

6.2. Vor dem Einbau

Einbaulage: beliebig, vorzugsweise Antrieb oben.

Vorgehensweise:

→ Rohrleitungen von eventuellen Verschmutzungen säubern.

→ Vor dem Ventileingang einen Schmutzfilter einbauen (≤ 500 µm).

6.3. Einbau

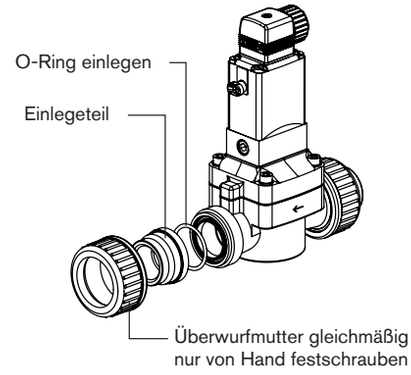

HINWEIS!

Vorsicht Bruchgefahr!
- Spule nicht als Hebelarm benutzen.

→ Gehäuse mit Schweißmuffe: PVDF verwenden.

→ Gehäuse mit Klebemuffen: Tangit Spezialkleber verwenden.

Ventilgehäuse darf nicht verspannt eingebaut werden.

→ Durchflussrichtung beachten:
Der Pfeil auf dem Gehäuse kennzeichnet die Durchflussrichtung (keine Funktion in entgegengesetzter Durchflussrichtung).

6.4. Handnotbetätigung

VORSICHT!

Mediumsaustritt durch Verlust der O-Ringe!
- Verlust der O-Ringe führt zur Undichtheit des Ventils. Medium kann austreten!

HINWEIS!

Vorsicht!
- Bei arretierter Handnotbetätigung kann das Ventil elektrisch nicht mehr betätigt werden.

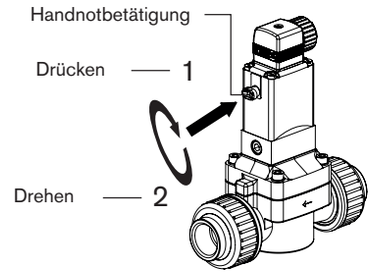

6.5. Elektrischer Anschluss der Gerätesteckdose

WARNUNG

Verletzungsgefahr durch Stromschlag!
- Vor Eingriffen in das System die elektrische Spannung abschalten und vor Wiedereinschalten sichern!
- Die geltenden Unfallverhütungs- und Sicherheitsbestimmungen für elektrische Geräte beachten!

Bei fehlendem Schutzleiterkontakt zwischen Spule und Gehäuse besteht die Gefahr des Stromschlags!
- Schutzleiter immer anschließen.
- Elektrischer Durchgang zwischen Spule und Gehäuse prüfen.

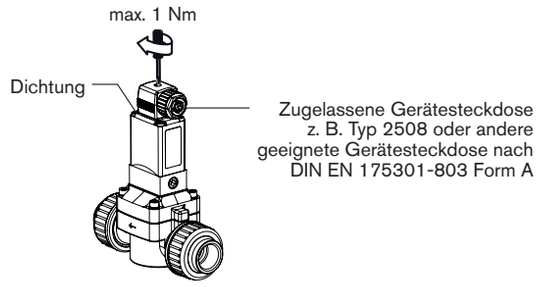

Spannung und Stromart laut Typschild beachten.

Vorgehensweise:

→ Gerätesteckdose (zugelassene Typen siehe Datenblatt) festschrauben, dabei maximalen Drehmoment 1 Nm beachten.

→ Korrekten Sitz der Dichtung überprüfen.

→ Schutzleiter anschließen und elektrischer Durchgang zwischen Spule und Gehäuse prüfen.

6.5.1. Elektrischer Anschluss - Impuls

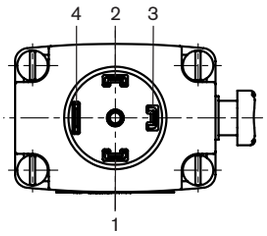

Anschlüsse bei DC:
Klemme 1 = zu +
Klemme 2 = auf +
Klemme 3 = GND -
Schutzleiteranschluss

Die Anschlussklemmen in der Gerätesteckdose sind entsprechend den Klemmen am Ventil mit den Ziffern 1 bis 3 gekennzeichnet.

Vorgehensweise:

→ Impulsventile (variable code CF 02) anschließen.

→ Bei Gleichspannungsausführungen Minuspol an Klemme 3 anschließen.

HINWEIS!

Wichtige Hinweise:
- Gleichzeitige Impulsgabe auf beide Spulenwicklungen vermeiden.
- Parallel zu den Klemmen dürfen keine weiteren Verbraucher (Relais und dergl.) geschaltet werden.
- Der jeweils nicht spannungsbeaufschlagte Spulenanschluss muss galvanisch getrennt (offen) sein.
- Sollten zwei oder mehr Ventile parallel geschaltet werden, ist durch Verwendung von 2- oder mehrpoligen Schaltern sicherzustellen, dass diese Forderung erfüllt ist.

7. WARTUNG, FEHLERBEHEBUNG

7.1. Sicherheitshinweise

WARNUNG!

Verletzungsgefahr bei unsachgemäßen Wartungsarbeiten!
- Die Wartung darf nur autorisiertes Fachpersonal mit geeignetem Werkzeug durchführen!

Verletzungsgefahr durch ungewolltes Einschalten der Anlage und unkontrollierten Wiederanlauf!
- Anlage vor unbeabsichtigtem Betätigen sichern.
- Nach der Wartung einen kontrollierten Wiederanlauf gewährleisten.

deutsch

7.2. Störungen

Bei Störungen überprüfen ob:

→ das Gerät vorschriftsmäßig installiert ist,

→ der elektrische und fluidische Anschluss ordnungsgemäß ausgeführt ist,

→ das Gerät nicht beschädigt ist,

→ alle Schrauben fest angezogen sind,

→ Spannung und Druck anliegen,

→ die Rohrleitungen schmutzfrei sind.

Ventil schaltet nicht

Mögliche Ursache:
- Kurzschluss oder Spulenunterbrechung,
- Mediumsdruck außerhalb das zulässigen Druckbereichs,
- Handnotbetätigung arretiert.

Ventil schließt nicht

Mögliche Ursache:
- Innenraum des Ventils verschmutzt,
- Handnotbetätigung arretiert,
- Drossel (Ventileingang) bzw. Vorsteuerbohrungen (Ventil- Eingang / Ausgang) verschmutzt.

deutsch

8. ERSATZTEILE

VORSICHT!

Verletzungsgefahr, Sachschäden durch falsche Teile!

Falsches Zubehör und ungeeignete Ersatzteile können Verletzungen und Schäden am Gerät und dessen Umgebung verursachen.
- Nur Originalzubehör sowie Originalersatzteile der Firma Bürkert verwenden.

8.1. Ersatzteile bestellen

Bestellen Sie die Ersatzteilsätze unter Angabe der Positionen (Pos. 1: Vorsteuersatz, Pos. 2: Verschleißteilsatz) und der Identnummer des Geräts.

MAN 1000010221 ML Version: F Status: RL (released | freigegeben) printed: 11.05.2016

8.2. Übersicht Ersatzteile

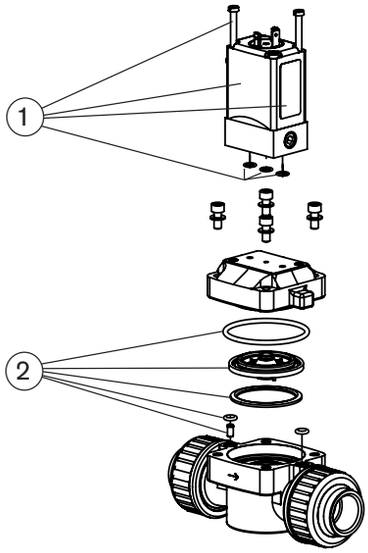

9. TRANSPORT, LAGERUNG, ENTSORGUNG

HINWEIS!

Transportschäden!

Unzureichend geschützte Geräte können durch den Transport beschädigt werden.

- Gerät vor Nässe und Schmutz geschützt in einer stoßfesten Verpackung transportieren.
- Eine Über- bzw. Unterschreitung der zulässigen Lagertemperatur vermeiden.
- Elektrische Schnittstellen der Spule und die pneumatischen Anschlüsse mit Schutzkappen vor Beschädigungen schützen.

Falsche Lagerung kann Schäden am Gerät verursachen.

- Gerät trocken und staubfrei lagern!
- Lagertemperatur. -10 °C ... +50 °C (PVC)
  -10 °C ... +70 °C (PVDF).

Umweltschäden durch von Medien kontaminierte Geräteteile.

- Gerät und Verpackung umweltgerecht entsorgen!
- Geltende Entsorgungsvorschriften und Umweltbestimmungen einhalten.

MAN 1000010221 ML Version: F Status: RL (released | freigegeben) printed: 11.05.2016

1. MANUEL D'UTILISATION

Manuel d'utilisation contiennent des informations importantes.

- Lire attentivement ce manuel et respecter les consignes de sécurité.
- Le manuel doit être à disposition de chaque utilisateur.
- Nous déclinons toute responsabilité et n'accordons aucune garantie légale pour le type 0142 en cas de non-respect des instructions figurant dans ce manuel d'utilisation.

2. SYMBOLES

→ identifie une opération que vous effectuer.

Mise en garde contre les blessures graves ou mortelles :

DANGER !
En cas de danger imminent.

AVERTISSEMENT !
En cas de danger possible.

Mise en garde contre les blessures légères ou moyennement graves :

PRUDENCE !

Met en garde contre des dommages matériels :

REMARQUE !

3. UTILISATION CONFORME

L'utilisation non-conforme du type 0142 peut présenter des dangers pour les personnes, les installations avoisinantes et l'environnement.

- L'appareil est conçu pour commander, arrêter et doser des fluides neutres et agressive jusqu'à une viscosité de 21 mm²/s.
- Avec une un connecteur adéquat, par ex. le type 2508 de Bürkert, connectée et montée de manière conforme, l'appareil est conforme au type de protection IP65 selon DIN EN 60529 / IEC 60529.
- Lors de l'utilisation, il convient de respecter les données et conditions d'utilisation et d'exploitation admissibles spécifiées dans les instructions de service et dans les documents contractuels. Celles-ci sont décrites au chapitre « Caractéristiques techniques ».
- Les conditions pour l'utilisation sûre et parfaite sont un transport, un stockage et une installation dans les règles ainsi qu'une parfaite utilisation et maintenance.
- Veillez à ce que l'utilisation de l'appareil soit toujours conforme.

3.1. Limitations

Lors de l'exportation du système/de l'appareil, veuillez respecter les limitations éventuelles existantes.

4. CONSIGNES DE SÉCURITÉ FONDAMENTALES

Ces consignes de sécurité ne tiennent pas compte des hasards et des événements pouvant survenir lors du montage, de l'exploitation et de l'entretien.

Danger dû à la haute pression.

- Avant de desserrer les conduites et les vannes, coupez la pression et purgez l'air des conduites.

Danger présenté par la tension électrique.

- Avant d'intervenir dans le système, coupez la tension et empêchez toute remise sous tension par inadvertance.
- Veuillez respecter les réglementations en vigueur pour les appareils électriques en matière de prévention des accidents ainsi qu'en matière de sécurité.

Risque de brûlures/d'incendie en fonctionnement continu dû à des surfaces d'appareils brûlantes.

- Tenez les substances et les fluides facilement inflammables à l'écart de l'appareil et ne touchez pas ce dernier à mains nues.

Risque de blessure dû à une panne pour les vannes avec tension alternative (AC).

Un noyau bloqué provoque la surchauffe de la bobine et donc une panne.

- Surveiller le bon fonctionnement du processus de travail.

Risque de court-circuit / de sortie du fluide en présence de vissages non étanches.

- Veiller à l'installation correcte des joints.
- Visser soigneusement la vanne et les raccords de la tuyauterie.

Pour prévenir les blessures, respectez ce qui suit :

- N'apportez pas de modifications à l'extérieur du corps de l'appareil. L'installation ne peut pas être actionnée par inadvertance.
- Les travaux d'installation et de maintenance doivent être effectués uniquement par des techniciens qualifiés et habilités disposant de l'outillage approprié.
- Après une interruption de l'alimentation électrique ou pneumatique, un redémarrage défini ou contrôlé du processus doit être garanti.
- L'appareil doit être utilisé uniquement en parfait état et en respectant les instructions de service.
- Ne soumettez pas le corps à des contraintes mécaniques.
- Les règles générales de la technique sont d'application pour planifier l'utilisation et utiliser l'appareil.

français

5. CARACTÉRISTIQUES TECHNIQUES

5.1. Conditions d'exploitation

Les valeurs sont indiquées sur la plaque signalétique :

- Tension (Tolérance ± 10 %) / Type de courant
- Puissance de bobine (puissance active en W - à l'état chaud)
- Plaque de pression
- Matériau du corps
  PVC (PV) ou PVDF (PD)
- Matériau du joint
  FKM, EPDM

Type de protection : IP65 selon DIN EN 60529 / IEC 60529 avec une connecteur, par le type 2508 de Bürkert

Fonction vanne :

français

A (NC)

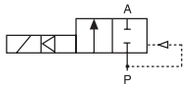

Électrovanne 2/2, normalement fermée

B (NO)

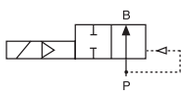

Électrovanne 2/2, normalement ouverte

5.2. Conditions d'utilisation

Température ambiante : PVC 0 - +40 °C
PVDF 0 - +55 °C

Température admissible du fluide en fonction de la matériau du corps :

Matériau du corps	Température du fluide
PVC	0 °C ... +50 °C
PVDF	0 °C ... +70 °C

Pression - Température Diagramme pour PVC et PVDF:

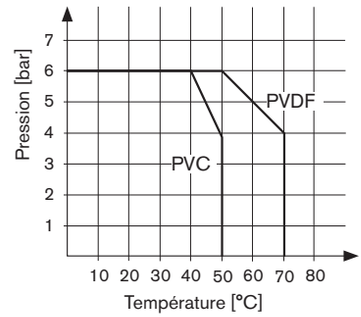

MAN 1000010221 ML Version: F Status: RL (released | freigegeben) printed: 11.05.2016

Fluides utilisables en fonction du matériau du joint :

Matériau du joint	Fluides admissibles
FKM	Acides et autres substances oxydantes, eau
EPDM	Alcalis, lessives alcalines et de blanchiment, eau, fluides d'huile et de graisse

Durée de fonctionnement

Si aucune information contraire ne figure sur la plaque signalétique, le système magnétique est adapté à un fonctionnement continu.

Remarque importante pour la sécurité de fonctionnement lors d'un fonctionnement continu !
Dans le cas d'un fonctionnement de longue durée, il est recommandé de procéder à 1 - 2 commutations minimum par jour.

Durée de vie

Une fréquence élevée de commutation ainsi que des pressions élevées réduisent la durée de vie.

5.3. Conformité

L'électrovanne type 0142 est conforme aux directives CE sur la base de la déclaration de conformité CE.

5.4. Normes

Les normes appliquées justifiant la conformité aux directives CE peuvent être consultées dans le certificat d'essai de modelé type CE et / ou la déclaration de Conformité CE.

5.5. Plaque signalétique

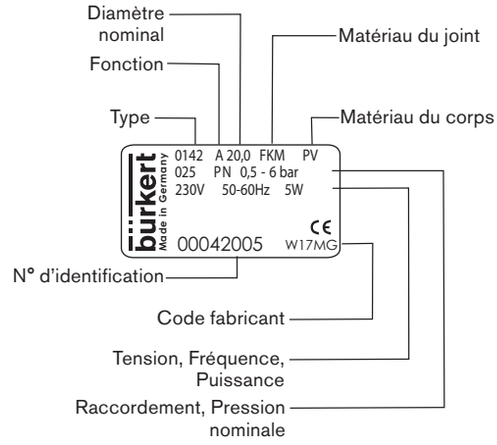

français

6. INSTALLATION

6.1. Consignes de sécurité

DANGER !

Risque de blessures dû à la présence de haute pression dans l'installation.
- Avant de desserrer les conduites et les vannes, coupez la pression et purgez l'air des conduites.

Risque de choc électrique.
- Avant d'intervenir dans le système, coupez la tension et empêchez toute remise sous tension par inadvertance !
- Veuillez respecter les réglementations en vigueur pour les appareils électriques en matière de prévention des accidents ainsi qu'en matière de sécurité !

AVERTISSEMENT !

Risque de blessures dû à un montage non conforme.
- Le montage doit être effectué uniquement par un personnel qualifié et habilité disposant de l'outillage approprié.

Risque de blessures dû à la mise en marche involontaire de l'installation et le redémarrage non contrôlé.
- Empêchez tout actionnement involontaire de l'installation.
- Garantissez un redémarrage contrôlé après le montage.

6.2. Avant le montage

Position de montage : au choix, de préférence avec l'actionneur vers le haut.

Procédure:

→ Contrôler les tuyauteries pour encrassements et les nettoyer.

→ Installer un filtre à saleté devant l'entrée de vanne (≤ 500 µm).

6.3. Installation

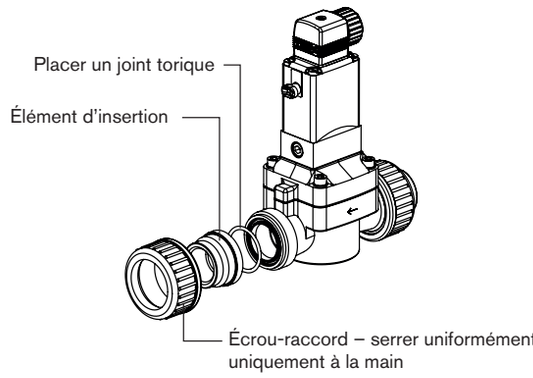

REMARQUE !

Attention risque de rupture.
- La bobine ne doit pas être utilisée comme levier.

→ Corps avec manchon de soudage : utiliser du PVDF.

→ Corps avec manchons à coller : Utiliser la colle spéciale Tangit.

Le corps de vanne ne doit pas être monté sous tension.

→ Respectez le sens du débit :
La flèche sur le corps indique le sens du débit (Aucun fonctionnement dans le sens de débit inverse).

6.4. Actionnement manuel d'urgence

ATTENTION !

Sortie de fluide due à la perte des joints toriques.
- La perte des joints toriques rend la vanne non étanche. Risque de sortie de fluide !

REMARQUE !

Attention.
- Lorsque l'actionnement manuel d'urgence est bloqué, l'actionnement électrique de la vanne n'est plus possible.

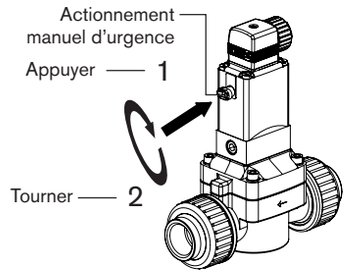

MAN 1000010221 ML Version: F Status: RL (released | freigegeben) printed: 11.05.2016

6.5. Raccordement électrique de la connecteur

AVERTISSEMENT !

Risque de choc électrique.

- Avant d'intervenir dans le système, coupez la tension et empêchez toute remise sous tension par inadvertance.
- Veuillez respecter les réglementations en vigueur pour les appareils électriques en matière de prévention des accidents ainsi qu'en matière de sécurité.

Il y a risque de choc électrique en l'absence d'un contact du conducteur de protection entre la bobine et le corps.

- Raccordez toujours la prise de terre et contrôlez le passage du courant entre la bobine et le corps.

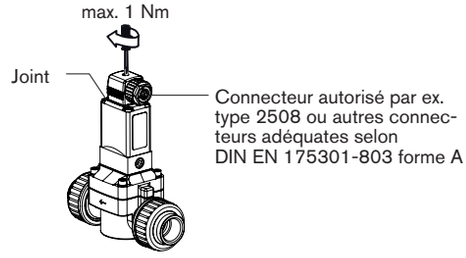

Respectez la tension et le type de courant selon la plaque signalétique.

Procédure :

→ Visser le connecteur (types admissibles, voir fiche technique) en respectant le couple max. de 1 Nm.

→ Vérifier le bon positionnement du joint.

→ Raccorder la prise de terre de protection et vérifier le passage électrique entre la bobine et le corps.

6.5.1. Raccordement électrique - impulsion

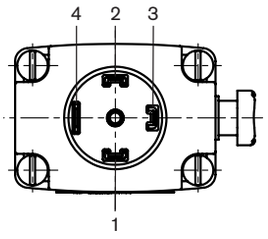

Raccords pour DC :
Borne 1 = fermé +
Borne 2 = ouvert +
Borne 3 = GND -
Raccord du conducteur de protection

Les bornes de raccordement dans la connecteur sont identifiées par les chiffres 1 à 3 conformément aux bornes de la vanne.

Procédure :

→ Raccorder les vannes à impulsions (code variable CF 02).

→ Pour les versions à tension continue, raccorder le pôle négatif à la borne 3.

REMARQUE !

Remarques importantes :

- Éviter de donner des impulsions simultanément sur les deux enroulements de bobine.
- Aucun autre consommateur ne doit être activé en parallèle avec les bornes (relais et semblables).
- Le raccord de bobine auquel aucune tension n'est appliquée doit être isolé électriquement (ouvert).
- En cas de montage en parallèle de deux ou plusieurs vannes, il convient de garantir le respect de cette exigence par l'utilisation d'interrupteurs bipolaires ou multipolaires.

7. MAINTENANCE, DÉPANNAGE

7.1. Consignes de sécurité

AVERTISSEMENT !

Risque de blessures dû à des travaux de maintenance non conformes.

- La maintenance doit être effectué uniquement par un personnel qualifié et habilité disposant de l'outillage approprié.

Risque de blessures dû à la mise en marche involontaire de l'installation et le redémarrage non contrôlé.

- Empêchez tout actionnement involontaire de l'installation.
- Garantissez un redémarrage contrôlé après la maintenance.

7.2. Pannes

En présence de pannes, vérifiez :

→ si l'appareil est installé dans les règles,

→ si le raccord électrique et fluide est correct,

→ si l'appareil n'est pas endommagé,

→ si toutes les vis sont bien serrées,

→ si la tension et la pression sont disponibles,

→ si les tuyauteries sont propres.

français

La vanne ne s'enclenche pas

Cause possible :

- Court-circuit ou coupure de la bobine.
- Pression du fluide hors de la plage de pression autorisée.
- Actionnement manuel d'urgence bloqué.

La vanne ne se ferme pas

Cause possible :

- Intérieur de la vanne encrassé.
- Actionnement manuel d'urgence bloqué.
- Étranglement (entrée de vanne) ou orifices de pilotage (entrée / sortie de vanne) encrassés.

8. PIÈCES DE RECHANGE

PRUDENCE !

Risque de blessures, de dommages matériels dus à de mauvaises pièces.

De mauvais accessoires ou des pièces de rechange inadaptées peuvent provoquer des blessures et endommager l'appareil ou son environnement.

- Utilisez uniquement des accessoires ainsi que des pièces de rechange d'origine de la société Bürkert.

8.1. Commander des pièces de rechange

Commandez les jeux de pièces de rechange avec mention des postes (pos. 1 : jeu pilote, pos. 2 : jeu de pièces d'usure) et le numéro d'identification de l'appareil.

français

MAN 1000010221 ML Version: F Status: RL (released | freigegeben) printed: 11.05.2016

8.2. Vue d'ensemble des pièces de rechange

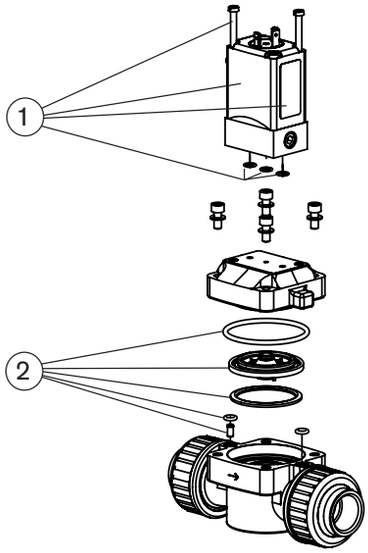

9. TRANSPORT, STOCKAGE, ÉLIMINATION

REMARQUE !

Dommages dus au transport.

Les appareils insuffisamment protégés peuvent être endommagés pendant le transport.

- Transportez l'appareil à l'abri de l'humidité et des impuretés et dans un emballage résistant aux chocs.
- Évitez le dépassement vers le haut ou le bas de la température de stockage admissible.
- Protéger les interfaces électriques de la bobine et les raccordements pneumatiques des détériorations à l'aide des capuchons de protection.

Un mauvais stockage peut endommager l'appareil.

- Stockez l'appareil au sec et à l'abri des poussières !
- Température de stockage : -10 °C ... +50 °C (PVC)
  -10 °C ... +70 °C (PVDF).

Dommages à l'environnement causés par des pièces d'appareil contaminées par des fluides.

- Respectez les prescriptions en matière d'élimination des déchets et de protection de l'environnement en vigueur.

MAN 1000010221 ML Version: F Status: RL (released | freigegeben) printed: 11.05.2016

10.8 - C1-1 – CHEMLINE BALL FLOAT VALVE

CHEMLINE Plastics Limited

Your Pipeline To Quality Valves, Strainers, Flowmeters and Controls

55 Guardsman Road
Thornhill, Ontario
L3T 6L2
Canada
Tel: 905-889-7890
Fax: 905-889-8553

MAINTENACE INSTRUCTIONS
For Chemline Ball Float Valves Sizes 1/2" to 1-1/2"

Maintenance

Refer to **ASSEMBLY DRAWING BFT1 REV 0.** And proceed as follows:

1. Remove screw (2) from junction of float arm and body.
2. Float arm (1) and ball will release from body as one unit.
3. Separate upper body part A (3) from lower body part B (3). This will reveal the plunger (5).
4. Remove lock nut (8).
5. Plunger (5) can now be removed as one piece.
6. Disc (6) and Seat (7) should also be removed.
7. Inspect all parts especially disc (6) and seat (7) for wear and replace if necessary.
8. To reassemble valve follow steps 1 through 7 in reverse, making sure that the part number hot-stamped part number on the plunger can be seen from the bottom of the valve. This will minimize and direct any overspray from the valve towards the tank.

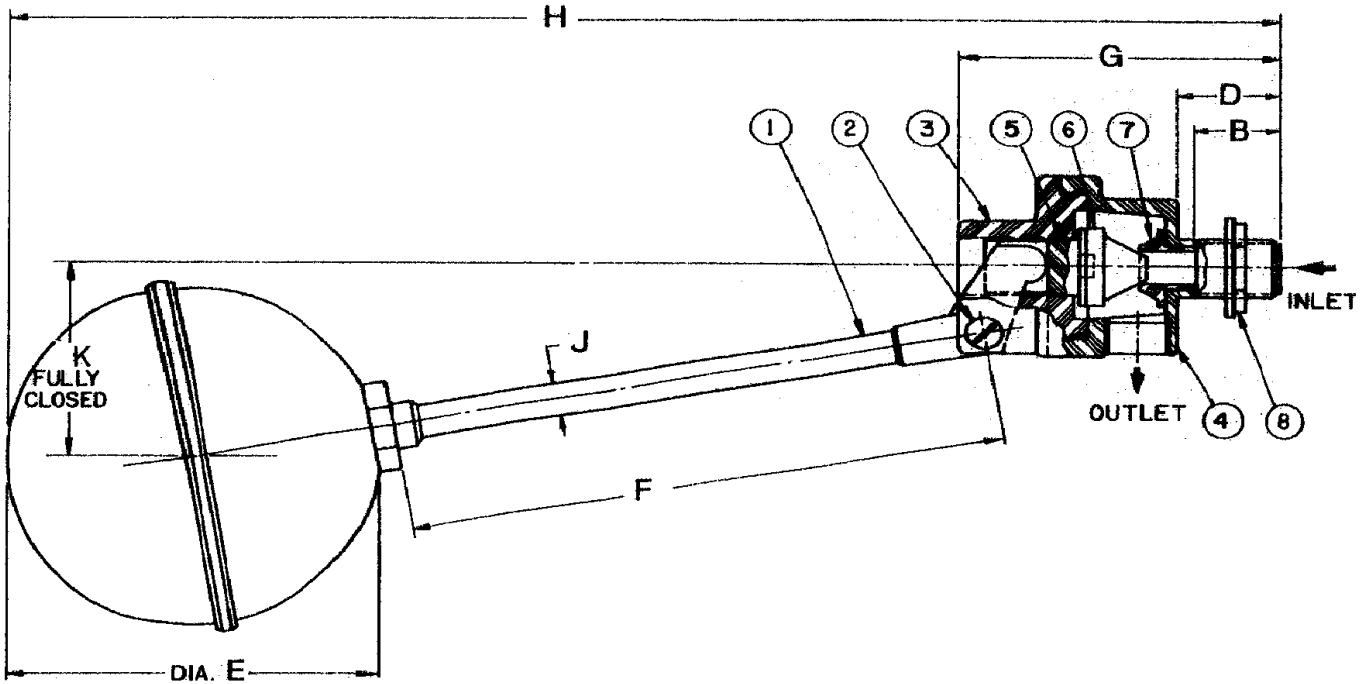

PT #	DESCRIPTION	QTY	MATERIAL
1	FLOAT/ARM	1	POLYPROPYLENE
2	SCREW	1	POLYPROPYLENE
3	BODY PART 'A'	1	POLYPROPYLENE
4	BODY PART 'B'	1	POLYPROPYLENE
5	PLUNGER	1	POLYPROPYLENE
6	DISC	1	POLYPROPYLENE
7	SEAT	1	POLYPROPYLENE
8	LOCK NUT	1	POLYPROPYLENE

TITLE: CHEMLINE BALL FLOAT VALVES	SCALE		DATE	CHEMLINE PLASTICS	
	DR. BY				
REFERENCE: SIZES 1/2" - 1"- 1-1/2"	CHKD. BY			DWG. NO. BFT1	REV. 0
	APP. BY				

10.9 - C1-2 – CHEMLINE ELECTRIC ACTUATOR

CHEMLINE Plastics Limited

Your Pipeline To Quality Valves, Strainers, Flowmeters and Controls

55 Guardsman Road
Thornhill, Ontario
L3T 6L2
Canada
Tel: 905-889-7890
Fax: 905-889-8553

INSTALLATION AND MAINTENANCE INSTRUCTIONS
For Chemline Q-Series Electric Actuator

General:

Chemline Q-Series reversing electric actuators feature capacitor run motors and permanently lubricated gear train. Standard units can provide up to 300 in-lbs. of output torque.

Q-Series models feature Nema-4X enclosures as standard and are available in 12 & 24VDC; 12 & 24VAC; 115 & 220VAC voltages.

Standard models are equipped with integral thermal overload protection (AC models) with automatic reset, independently adjustable limit switches, declutchable manual override with position indicating beacon and Zytel FR-50 glass-reinforced housing with stainless steel trim and ISO bolt circle.

Installation:

Refer to **ASSEMBLY DRAWING QACT rev 0.** And proceed as follows:

1. Loosen handle set screw (#35).
2. Remove manual override handle (#34).
3. Loosen cover screws (#33).
4. Remove cover (#27) and cover seal (#28).
5. Install conduit fitting (1/2" NPT) to actuator base (#1).
6. Make electrical connections to terminal block (#8&9) as shown on wiring schematic located inside the cover. There is a green screw on the actuator base plate (#7) for grounding per various electrical codes. NO SCREWS SHOULD BE LOOSENED EXCEPT THOSE ON THE TERMINAL STRIP. Electrical requirements are as per the chart below:

SIZE	TORQUE	115VAC		220VAC		12VDC		24VDC		12VAC		24VAC		CYCLE TIME 90 º	WEIGHT
	IN-LBS	AMP	DUTY	AMP	DUTY	AMP	DUTY	AMP	DUTY	AMP	DUTY	AMP	DUTY	(SEC)	(LBS)
QA	150	.50	100%	.8	75%	2.0	75%	4.0	75%	2.0	75%	4.0	75%	5	3.5
QB	300	.75	75%	.8	75%	2.0	75%	4.0	75%	2.0	75%	4.0	75%	5	3.5

Installation & Maintenance Instructions Q-Series Actuators cont.

7. SEVERAL PARTS MAY GET MISALIGNED OR LOOSE DURING TRANSIT. If the motor doesn't turn upon power-up, loosen all 4 motor top cap screws, then manually rotate the top spindle (rotor) and move motor from side to side as power is applied. Once the motor is turning, maintain it in position and tighten screws completely while cycling motor open and closed. This will guarantee motor's free motion when the cover is replaced. The motor should not require any more adjustment.

8. Install cover screws (#33) and tighten securely.

9. Install the manual override handle (#34) and handle set screw (#35).

10. Unit is now ready for operation. All units are completely calibrated prior to shipment. No internal adjustment should be required.

Troubleshooting

Problem	Cause	Action
The actuator does not operate.	The power source is off.	Check/turn on the power source.
	Wrong or low supply voltage to the actuator.	Check voltage with a tester and set as specified.
	The wiring is incorrect.	Check wiring against the supplied diagram (inside actuator cover).
	The motor/brake may be seized. (See installation note #7.)	Remove brake and/or loosen motor cap bolts and power actuator. Tighten bolts when proper alignment is found.
	Internal bolts may be loose.	Check/tighten all visible internal bolts.
	Travel stop cams may be loose/misadjusted.	Check/tighten/adjust all travel stop cam setscrews (2 per cam).
	Not enough operating torque.	Consult with Chemline technical staff.
	An obstruction may be in the valve.	Remove/check the valve.
The actuator operates, but the valve doesn't open or close.	The drive coupling is broken or disconnected.	Check/replace the coupling.
	The manual override is engaged or backwards.	See manual override operation below.
	The stem of the valve is broken.	Remove/check the valve.
Option doesn't function or functions erratically.	Option is misadjusted.	Adjust as per the appropriate maintenance manual or option header below.

Installation & Maintenance Instructions Q-Series Actuators cont.

Manual Override Operation

Depress the override handle (#34) and rotate within labeled limits as indicated by arrows.
To re-engage simply rotate actuator shaft (#16) within arrows until handle moves up and re-engages.
If actuator still does not respond properly, depress override handle and turn 180 degrees to re-engage in the correct quadrant.

Setting Limit Switches

Open Travel Limit Switch - (Top Switch #14) Using-declutchable manual override, move the valve into a full open position, loosen cam set screws (#22) on top cam (#21) with a 5/64" allen key and rotate cam into limit switch (#14) arm until a click is heard. This designates that the switch circuit has opened and defines a full open position. Tighten cam set screws (#22) on cam (#21).

Closed Limit Switch - (Bottom Switch #14) Using declutchable manual override, move the valve to a full closed position, loosen cam set screws (#22) on bottom cam (#21) with a 5/64" allen key and rotate cam into limit switch (#14) arm until a click is heard. This designates that the switch circuit has opened and defines a full closed position. Tighten cam set screws (#22) on cam (#21).

Adjusting the Cycle Rate Regulator

There are 2 potentiometers for both "on" time and "off" time. With both pots in the extreme CCW position, the unit will operate "on" for 1 second and be "off" for 1 second, etc. until the unit is either fully open or fully closed. To lengthen the cycle time, adjust the CRR module pots clockwise until you have the desired cycle time. However, due to the standard cycle length the adjustment of the "on" pot is limited to the standard cycle time. The CRR module is capable of 1-100 second delays in either "on" or "off" positions.

Installing a Heater/Thermostat

Open cover. Install heater into threaded hole on base plate closest to motor module. If no hole is present, drill hole in base plate about 1" towards cams from terminal side and ½" from motor using #21 drill bit. Tap hole using 10/32 tap. Thread heater into hole. Install heater lead in terminal #12. Install thermostst lead (one with shrink tubing on it) in terminal #13. Wire tie loose wiring. Test by applying power.

Installing a Heater/Thermostat on 4-20 mA board

Open cover. Install heater into threaded hole on base plate closest to motor module. If no hole is present, Drill and tap as above. Thread heater into hole. Install heater leads to J1 on QM1-2 with thermostat going to # 2 and heater going to #3. Wire tie loose wiring. Test by applying power.

Installation & Maintenance Instructions Q-Series Actuators cont.

Installing/Adjusting Centre-Off

With unit in closed position, mount 2 centre-off switches directly on top of standard switches. Install negative lobe came on shaft on top of standard cams. Set cams so that the top cam trips the switch lever traveling counterclockwise and the botton cam trips the switch lever traveling clockwise. Wiring to the extra switches should be opposite to those of the regular switches.
Note: Bottom cam should "just trip" its switch and the top cam should "just miss tripping" its switch. Run unit 90 degrees clockwise and adjust bottom cam to allow 180 degree rotation. Wire unit per drawing # CENT-OFF.

Installing 2-Wire Control with a Relay

Note: all connections to the terminal strip are done on the back side, reference drawing 0018EL.
Connect #1 on relay to #3 on the terminal strip (blue wire).
Connect #3 on relay to #2 on the terminal strip (white wire).
Connect #5 and 7 on relay to #14 on the terminal strip (white wire).
Connect #8 on relay to #15 on the terminal strip (blue wire).
Jump #1 and 16 on the terminal strip (blue wire).
Apply/wire 115VAC to # 1 and 14 on the terminal strip.
Install a customer-supplied switch to #15 and 16 on the terminal strip.

Installing Feedback Potentiometer

Install potentiometer bracket. Install main gear face up on outer shaft. Install potentiometer and gear, engaging onto larger gear drive. Wire as follows: White w/black strip from #1 on pot. to #16 on the terminal strip. Brown w/white strip from #3 on pot. to #14 on the terminal strip. Using multimeter set at 2k ohms, calibrate potentiometer with leads from meter to #15 and 16 on the terminal strip with actuator in the closed position. Multimeter should read between 95 – 100 ohms. With actuator in the open position, multimeter should also read between 95 – 100 ohms.

Installing Mechanical Brake

Remove handle and cover.
Loosen 2 motor module screws diagonally across from each other.
Install bracket with tabs up to bring the face of the bracket to its lowest point.
Install coupling over motor shaft at its lowest point, but do not bottom out on top of the motor.
Tighten set screws with .050" allen key.
Install brake mechanism. It should sit flush on the bracket and show engagement with the coupling.
Remove motor leads A and B from capacitor (on wiring diagram inside cover).
Install silver piggyback connectors on capacitor.
Install motor leads and brake leads (motor leads should be installed on the same side from where they were removed).
Wire tie loose wiring. Cycle unit and make necessary adjustments.

Installation & Maintenance Instructions Q-Series Actuators cont.

Installing Extra Limit Switches

Remove cover.
Remove limit switch screws and add the extra limit switch(es) on top of the standard switches.
Install wiring harness. Harness runs from switches under motor and into terminal strips.
Wire 1 extra (bottom) switch as follows: Pink = common on switch to #6 on terminal strip.
Purple = normally closed on switch to #7 on terminal strip.
Blue = normally open on switch to #8 on terminal strip.
(Set with closed limit switch).
Wire 2nd extra (top) limit switch as follow: Brown = common on switch to #9 on terminal strip.
Green = normally closed on switch to #10 on terminal strip.
Orange = normally open on switch to #11 on terminal strip.
(Set with open limit switch).
Install and set extra cams to trip before the standard limit switches in both open and closed positions.
Wire tie loose wiring. Test by cycling unit.

Maintenance:

Q-Series actuators are manufactured with factory lubricated gear case and gear box. In most cases, this lubricant should never have to be replenished. Please consult the factory if deemed necessary.

The following spare parts should be kept on hand.
1 - Limit Switch (14) rated 15.1 Amps at 125/250/277 VAC; ½ amp at 125VDC; ¼ amp at 250VDC.
1 - Capacitor (13A) or (13B)

CAUTION: Before any maintenance is performed and to prevent ignition of hazardous atmospheres, and reduce the chance of electrical shock, NEVER remove actuator cover while circuits are live. If mounted unit is installed other than straight up, the actuator should be supported individually in order to prevent pipe/valve stresses and loosening up of fasteners.

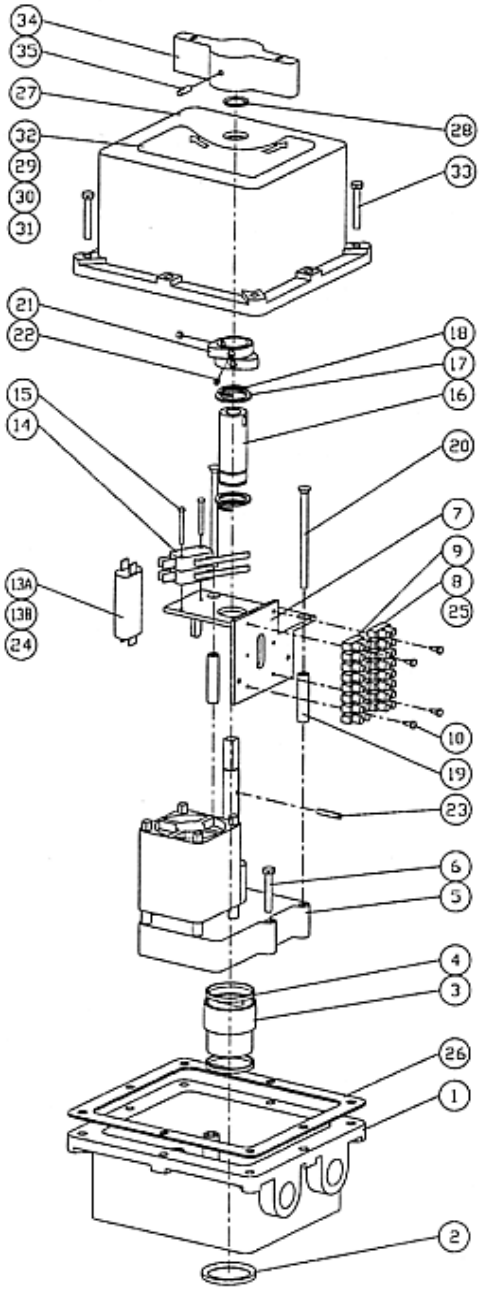

ITEM	QTY	DESCRIPTION
1	1	BASE
2	1	BASE SEAL
3	1	OUTPUT COUPLING
4	2	COUPLING GASKET
5	1	MOTOR
6	2	MOTOR SCREW
7	1	BASE PLATE
8	1	TERMINAL BLOCK 1-8
9	1	TERMINAL BLOCK 9-16
10	4	TERMINAL BLOCK SCREW
13A	1	4.2 MFD CAPACITOR - A94
13B	1	6.7 MFD CAPACITOR - B94
14	2	LIMIT SWITCH
15	2	LIMIT SWITCH SCREW
16	1	OUTER SHAFT
17	2	OUTER SHAFT GASKET
18	2	RETAINING RING
19	2	STANDOFF
20	2	BASE PLATE SCREW
21	2	CAM
22	4	CAM SCREW
23	1	PIN
24	1	2 PC HARNESS
25	1	4 PC HARNESS
26	1	BASE GASKET
27	1	COVER
28	1	COVER SEAL
29	1	WIRE DIAGRAM LABEL
30	1	OPTION LABEL
31	1	QM II LABEL
32	1	OVERRIDE LABEL
33	8	COVER SCREW
34	1	HANDLE
35	1	HANDLE SCREW
36	1	QM II BOX

NOTE:
1. LOCATE ITEM 29 & 30 ON INSIDE SURFACES OF COVER (ITEM 27).
2. LOCATE ITEM 31 ON OUTSIDE BACK SURFACE OF COVER (ITEM 27).

THIS DRAWING AND ALL INFORMATION HEREON IS THE PROPERTY OF ASAHI/AMERICA. ANY COPYING, REPRODUCTION OR UNAUTHORIZED USE IS FORBIDDEN WITHOUT WRITTEN CONSENT.

	NAME	DATE
DR	D CAMERON	9/13/01
APPD	DAVE HURLEY	9/13/01
PROD	LEO LESTER	9/13/01
WO#/SO#		
FILE	ACAD11/QM	

Chemline Plastics Inc.

Q-Series
Exploded View

SIZE	DWG. NO.	REV
A	QACT	0

SCALE NTS SHEET 1 OF 1

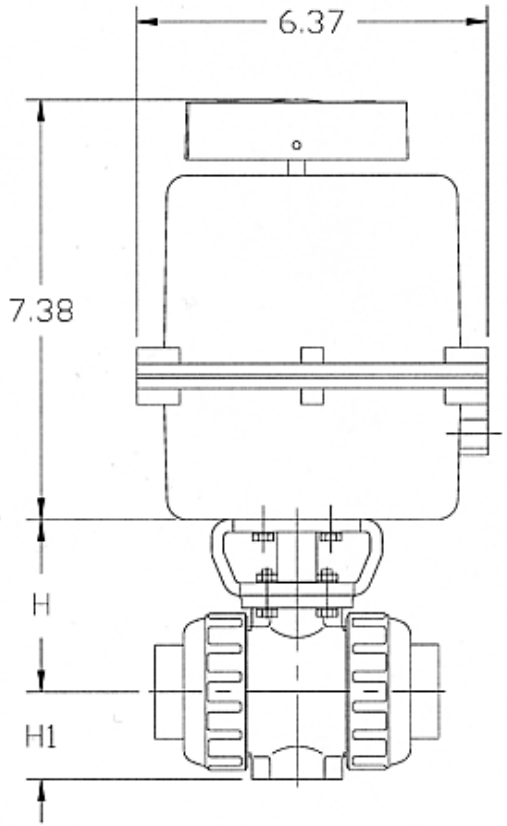

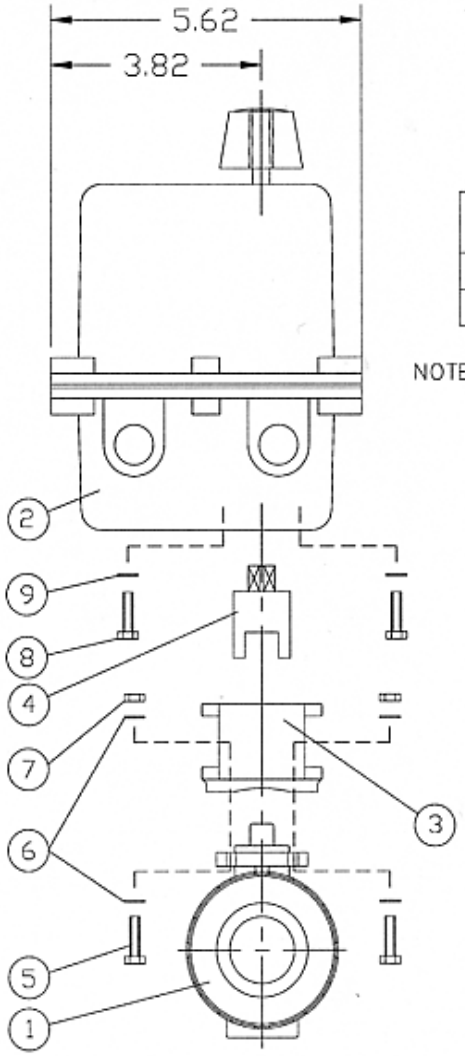

UNIT: INCH

VALVE SIZE	1/2"	3/4"	1"	1-1/4"	1-1/2"	2"
H	2.76	3.01	3.29	3.64	3.98	4.43
H1	1.14	1.38	1.54	1.85	2.17	2.60

NOTE. The shape and appearance of assembly differ a little with nominal size compared to this drawing.

ITEM	DESCRIPTION	MATERIAL	QTY
9	FLAT WASHER (M6.0)	STAINLESS STEEL	4
8	BOLT (M6.0x1-16LG)	STAINLESS STEEL	4
7	NUT (FOR 1/2" THRU 1-1/4" : M5.0x.8) (FOR 1-1/2" THRU 2" : M6.0x1)	STAINLESS STEEL	4
6	FLAT WASHER (FOR 1/2" THRU 1-1/4" : M5.0) (FOR 1-1/2" THRU 2" : M6.0)	STAINLESS STEEL	8
5	BOLT (FOR 1/2" THRU 1-1/4" : M5.0x.8-16LG) (FOR 1-1/2" THRU 2" : M6.0x1-20LG)	STAINLESS STEEL	4
4	COUPLING	STAINLESS STEEL 303	1
3	MOUNTING BRACKET	PPG	1
2	ACTUATOR SERIES 94	ZYTEL	1
1	BALL VALVE TYPE 21	PVC,CPVC,PP,PVDF	1

THIS DRAWING AND ALL INFORMATION HEREON IS THE PROPERTY OF ASAHI/AMERICA. ANY COPYING, REPRODUCTION OR UNAUTHORIZED USE IS FORBIDDEN WITHOUT WRITTEN CONSENT.

	NAME	DATE
DR	KENICHI MIYAZAKI	8/2/01
APPD	DAVE HURLEY	8/2/01
PROD	LEO LESTER	8/2/01
WO#/CO#		
FILE		

CHEMLINE PLASTICS

Q-SERIES ACTUATOR ON TYPE-21 BALL VALVE 1/2" TO 2"

SIZE	DWG. NO.	REV
A	0106BV	A

SCALE NTS SHEET 1 OF 1

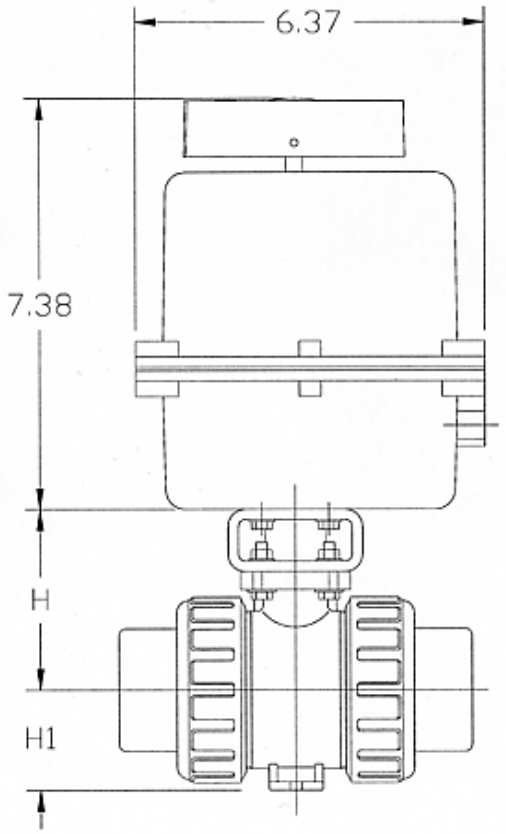

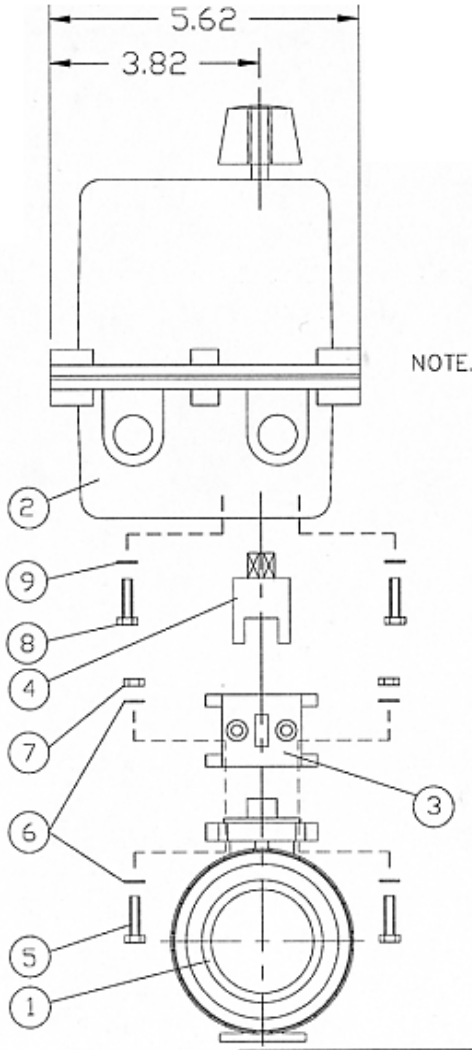

UNIT: INCH

VALVE SIZE	2-1/2"	3"
H	5.12	5.47
H1	2.83	3.35

NOTE. The shape and appearance of assembly differ a little with nominal size compared to this drawing.

ITEM	DESCRIPTION	MATERIAL	QTY
9	FLAT WASHER (M6.0)	STAINLESS STEEL	4
8	BOLT (M6.0x1-16LG)	STAINLESS STEEL	4
7	NUT (M8.0x1.25)	STAINLESS STEEL	4
6	FLAT WASHER (M8.0)	STAINLESS STEEL	8
5	BOLT (M8.0x1.25-35LG)	STAINLESS STEEL	4
4	COUPLING	STAINLESS STEEL 303	1
3	MOUNTING BRACKET	PPG	1
2	ACTUATOR SERIES 94	ZYTEL	1
1	BALL VALVE TYPE 21	PVC,CPVC,PP,PVDF	1

THIS DRAWING AND ALL INFORMATION HEREON IS THE PROPERTY OF ASAHI/AMERICA. ANY COPYING, REPRODUCTION OR UNAUTHORIZED USE IS FORBIDDEN WITHOUT WRITTEN CONSENT.

	NAME	DATE
DR	KENICHI MIYAZAKI	8/14/01
APPD	DAVE HURLEY	8/14/01
PROD	LEO LESTER	8/14/01
WO#/CO#		
FILE		

CHEMLINE PLASTICS

Q-SERIES ACTUATOR ON TYPE-21 VALVE 2-1/2" & 3"

SIZE	DWG. NO.	REV
A	0112BV	A

SCALE NTS SHEET 1 OF 1

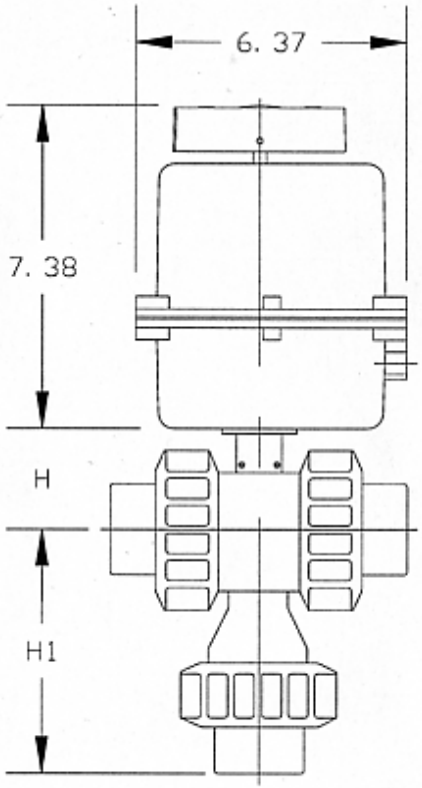

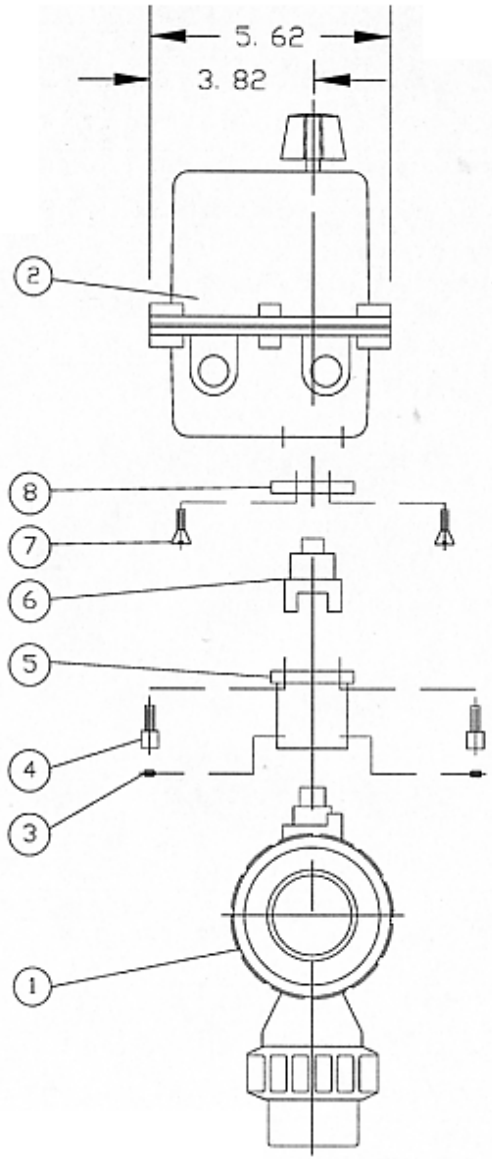

UNIT: INCH

VALVE SIZE	1/2"	3/4"	1"	1-1/4"	1-1/2"	2"
H	1.95	2.31	2.46	2.92	3.85	4.00
H1	3.33	3.88	4.81	6.61	6.61	7.57

NOTE. The shape and appearance of assembly differ a little with nominal size compared to this drawing.

ITEM	DESCRIPTION	MATERIAL	QTY
8	PLATE MOUNTING (FOR 1-1/2" AND 2" ONLY)	ANODIZED ALUM.	1
7	SCREW FLAT HD (FOR 1-1/2" AND 2" ONLY)	300 SS	4
6	COUPLING	ANODIZED ALUM.	1
5	SADDLE	ANODIZED ALUM.	1
4	SCREW SOC HD (FOR 1/2" THRU 1-1/4" : M6x 16) (FOR 1-1/2" THRU 2" : M8x 12)	300 SS	4
3	SET SCREW (10-32x1/4")	300 SS	2
2	ACTUATOR SERIES 94	ZYTEL	1
1	MULTI PORT BALL VALVE	PVC,CPVC,PP,PVDF	1

THIS DRAWING AND ALL INFORMATION HEREON IS THE PROPERTY OF ASAHI/AMERICA. ANY COPYING, REPRODUCTION OR UNAUTHORIZED USE IS FORBIDDEN WITHOUT WRITTEN CONSENT.

	NAME	DATE
DR	KENICHI MIYAZAKI	8/3/01
APPD	DAVE HURLEY	8/3/01
PROD	LEO LESTER	8/3/01
WO#/CO#		
FILE		

CHEMLINE PLASTICS

Q-SERIES ACTUATOR ON MULTI-PORT VALVE 1/2" TO 2"

SIZE	DWG. NO.	REV
A	0108BV	A

SCALE NTS

SHEET 1 OF 1

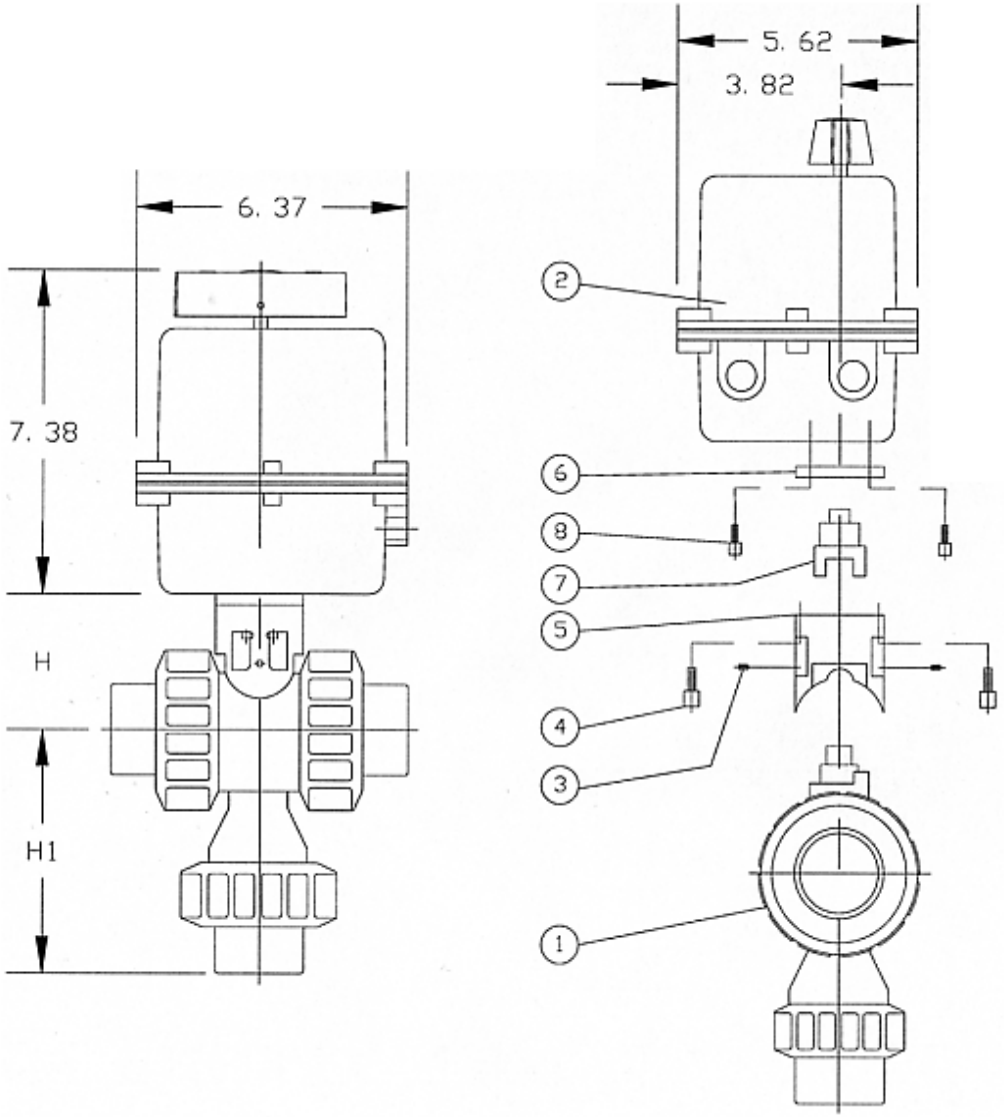

ITEM	DESCRIPTION	MATERIAL	QTY
8	SCREW SOC HD (M6.0x16)	300 SS	4
7	COUPLING	ANODIZED ALUM.	1
6	PLATE MOUNTING	ANODIZED ALUM.	1
5	SADDLE	PVC	1
4	SCREW SOC HD (1/4-20x11/4)	300 SS	4
3	SET SCREW (1/4-20x3/4)	300 SS	4
2	ACTUATOR SERIES 94	ZYTEL	1
1	MULTI PORT BALL VALVE	PVC,CPVC,PP,PVDF	1

UNIT: INCH

VALVE SIZE	2-1/2"	3"
H	5.12	5.50
H1	10.34	10.34

NOTE. The shape and appearance of assembly differ a little with nominal size compared to this drawing.

THIS DRAWING AND ALL INFORMATION HEREON IS THE PROPERTY OF ASAHI/AMERICA. ANY COPYING, REPRODUCTION OR UNAUTHORIZED USE IS FORBIDDEN WITHOUT WRITTEN CONSENT.

	NAME	DATE
DR	KENICHI MIYAZAKI	8/3/01
APPD	DAVE HURLEY	8/3/01
PROD	LEO LESTER	8/3/01
WO#/CO#		
FILE		

CHEMLINE PLASTICS

Q-SERIES ACTUATOR ON MULTI-PORT VALVE 2-1/2" & 3"

SIZE	DWG. NO.	REV
A	0109BV	A

SCALE NTS SHEET 1 OF 1

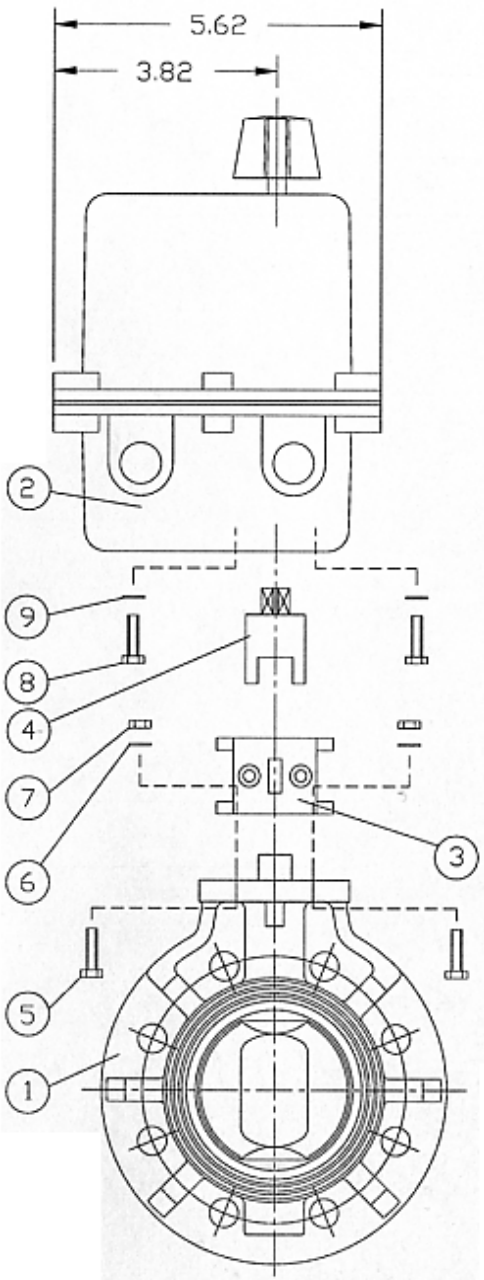

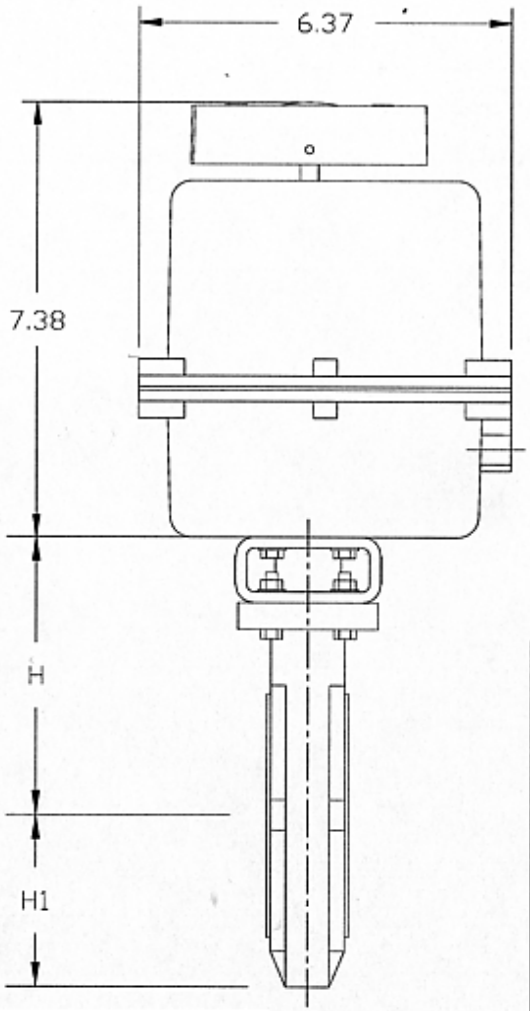

UNIT: INCH

VALVE SIZE	1-1/2"	2"	2-1/2"	3"	4"
H	5.51	5.75	6.18	6.46	7.16
H1	2.95	3.27	3.66	3.94	4.53

NOTE: 1. The shape and appearance of assembly differ a little with nominal size compared to this drawing.
2. For Mounting Bracket : F07xF05, F07

ITEM	DESCRIPTION	MATERIAL	QTY
9	FLAT WASHER (M6.0)	STAINLESS STEEL	4
8	BOLT (M6.0x1-16LG)	STAINLESS STEEL	4
7	NUT (FOR 1-1/2" THRU. 4" : M8.0x1.25)	STAINLESS STEEL	4
6	FLAT WASHER (FOR 1-1/2" THRU. 4" : M8.0)	STAINLESS STEEL	8
5	BOLT (FOR 1-1/2" THRU. 4" : M8.0x1.25-35LG)	STAINLESS STEEL	4
4	COUPLING	STAINLESS STEEL 303	1
3	MOUNTING BRACKET	PPG	1
2	ACTUATOR SERIES 94	ZYTEL	1
1	BUTTERFLY VALVE TYPE 56	PVC,PP,PVDF	1

THIS DRAWING AND ALL INFORMATION HEREON IS THE PROPERTY OF ASAHI/AMERICA. ANY COPYING, REPRODUCTION OR UNAUTHORIZED USE IS FORBIDDEN WITHOUT WRITTEN CONSENT.

	NAME	DATE
DR	KENICHI MIYAZAKI	9/31/01
APPD	DAVE HURLEY	9/31/01
PROD	LEO LESTER	9/31/01
WO#/CO#		
FILE		

CHEMLINE PLASTICS

Q-SERIES ACTUATOR ON TYPE-56 BUTTERFLY 1-1/2" - 4"

SIZE	DWG. NO.	REV
A	0203BF	A

SCALE NTS

SHEET 1 OF 1

WIRING DIAGRAM FOR 115 VAC AND 220 VAC ONLY

ACTUATOR SHOWN IN COUNTER-CLOCKWISE EXTREME OF TRAVEL, OR "OPEN" POSITION

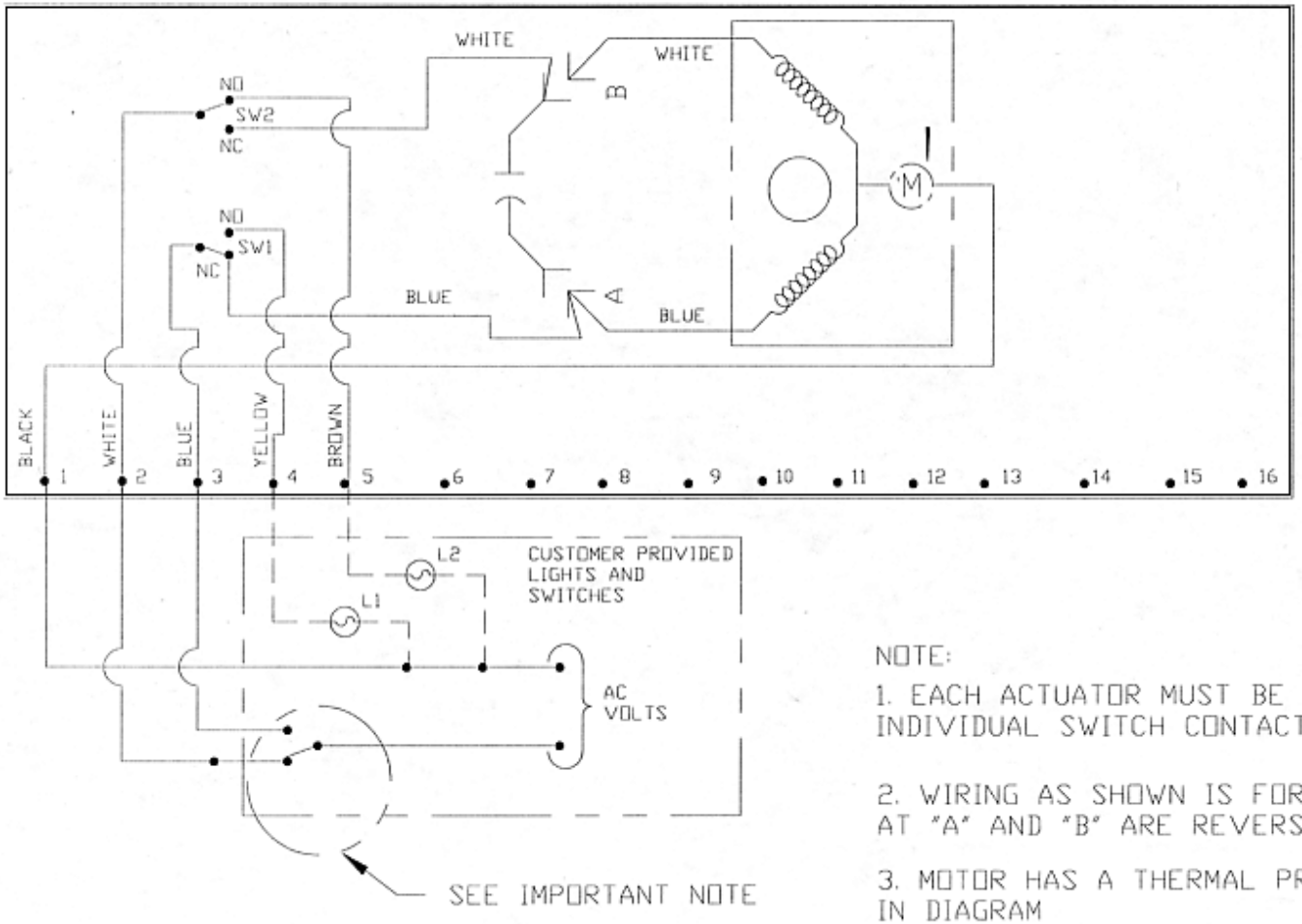

NOTE:

1. EACH ACTUATOR MUST BE POWERED THRU ITS OWN INDIVIDUAL SWITCH CONTACTS TO AVOID CROSS FEED

2. WIRING AS SHOWN IS FOR AA & AB MOTOR LEADS AT "A" AND "B" ARE REVERSABLE FOR AC AND AD

3. MOTOR HAS A THERMAL PROTECTOR AS SHOWN BY (M) IN DIAGRAM

THIS DRAWING AND ALL INFORMATION HEREON IS THE PROPERTY OF ASAHI/AMERICA. ANY COPYING, REPRODUCTION OR UNAUTHORIZED USE IS FORBIDDEN WITHOUT WRITTEN CONSENT.

	NAME	DATE
DR	KENICHI MIYAZAKI	8/3/01
APPD	DAVE HURLEY	8/3/01
PROD	LEO LESTER	8/3/01
WO#/CO#		
FILE		

CHEMLINE PLASTICS INC.

A- & Q-SERIES WIRING DIAGRAM - 120/220VAC

SIZE	DWG. NO.	REV
A	0043EL	A

SCALE NTS SHEET 1 OF 1

DC WIRING DIAGRAM

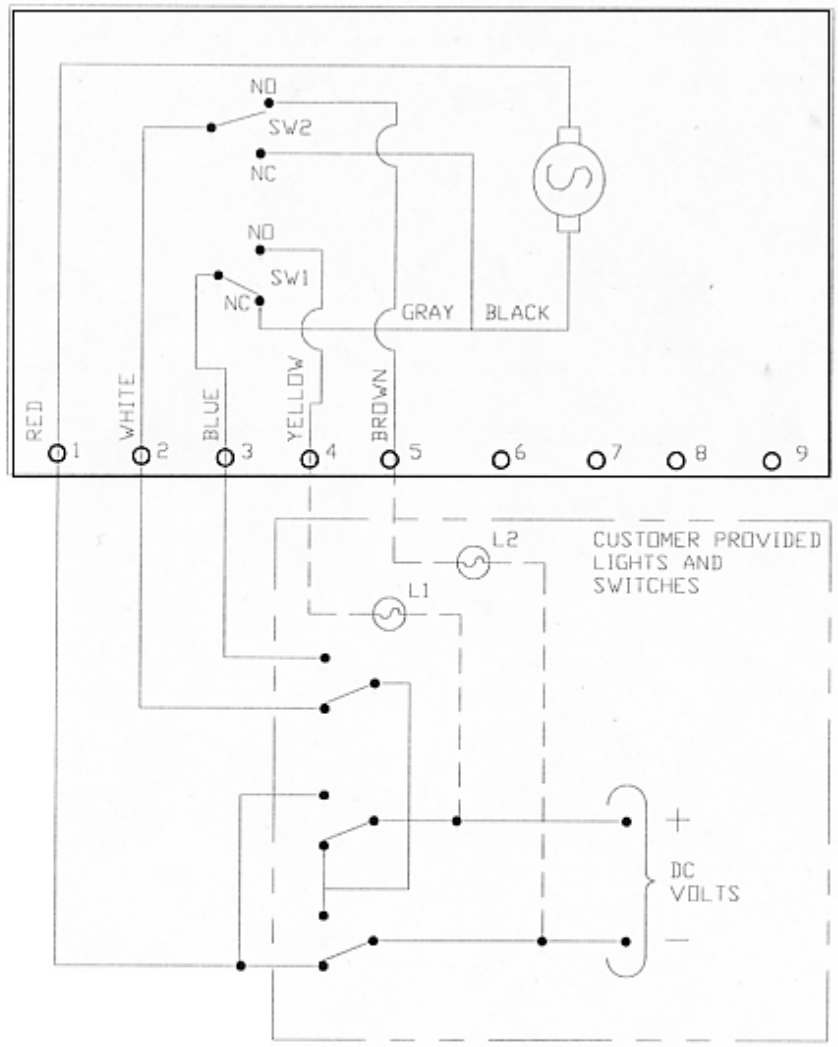

1. ACTUATOR SHOWN IN COUNTER CLOCKWISE EXTREME OF TRAVEL OR "OPEN" POSITON
2. MOTOR LEADS REVERSED FOR 1100 & 2000 IN*LBS.

1	2	3	
-	+		= OPEN
+		-	= CLOSE

THIS DRAWING AND ALL INFORMATION HEREON IS THE PROPERTY OF ASAHI/AMERICA. ANY COPYING, REPRODUCTION OR UNAUTHORIZED USE IS FORBIDDEN WITHOUT WRITTEN CONSENT.

	NAME	DATE
DR	KENICHI MIYAZAKI	8/3/01
APPD	DAVE HURLEY	8/3/01
PROD	LEO LESTER	8/3/01
WO#/CO#		
FILE		

CHEMLINE PLASTICS

A- & Q-SERIES WIRING DIAGRAM - 12/24VDC

SIZE	DWG. NO.	REV
A	0044EL	A

SCALE NTS SHEET 1 OF 1

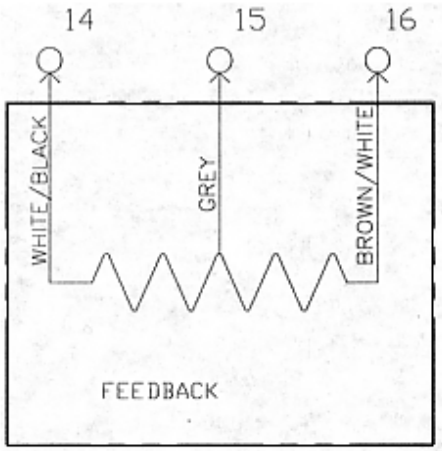

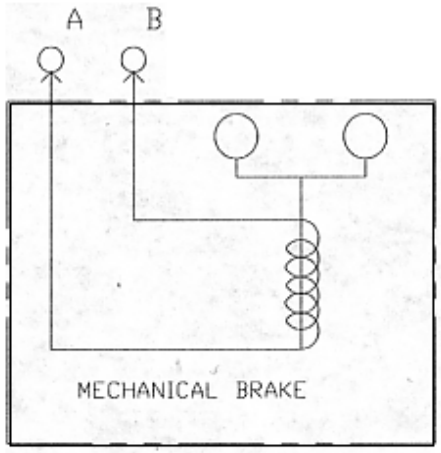

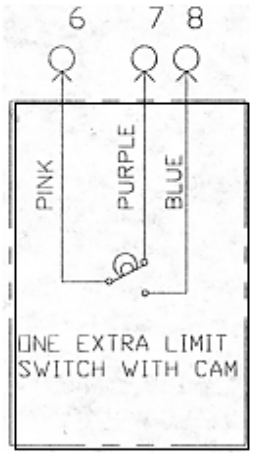

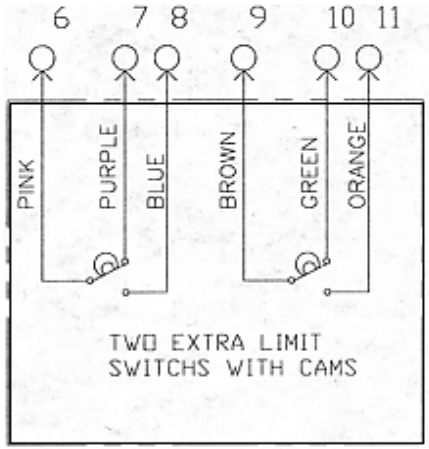

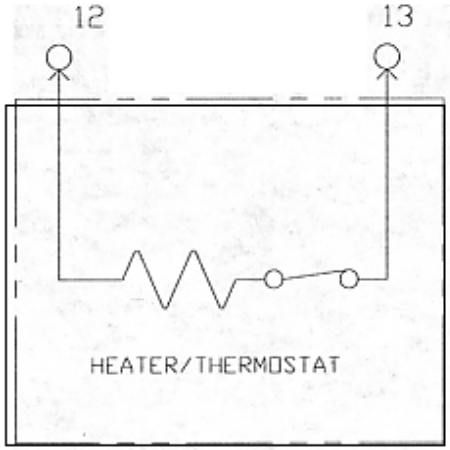

THIS DRAWING AND ALL INFORMATION HEREON IS THE PROPERTY OF ASAHI/AMERICA. ANY COPYING, REPRODUCTION OR UNAUTHORIZED USE IS FORBIDDEN WITHOUT WRITTEN CONSENT.

	NAME	DATE
DR	KENICHI MIYAZAKI	8/3/01
APPD	DAVE HURLEY	8/3/01
PROD	LEO LESTER	8/3/01
WO#/CO#		
FILE		

CHEMLINE PLASTICS

A- & Q-SERIES WIRING DIAGRAM - OPTIONS

SIZE	DWG. NO.	REV
A	0042EL	A
SCALE NTS	SHEET 1 OF 1	

WIRING DIAGRAM FOR 115 VAC AND 220 VAC ONLY

ACTUATOR SHOWN IN COUNTER-CLOCKWISE EXTREME OF TRAVEL, OR "OPEN" POSITION

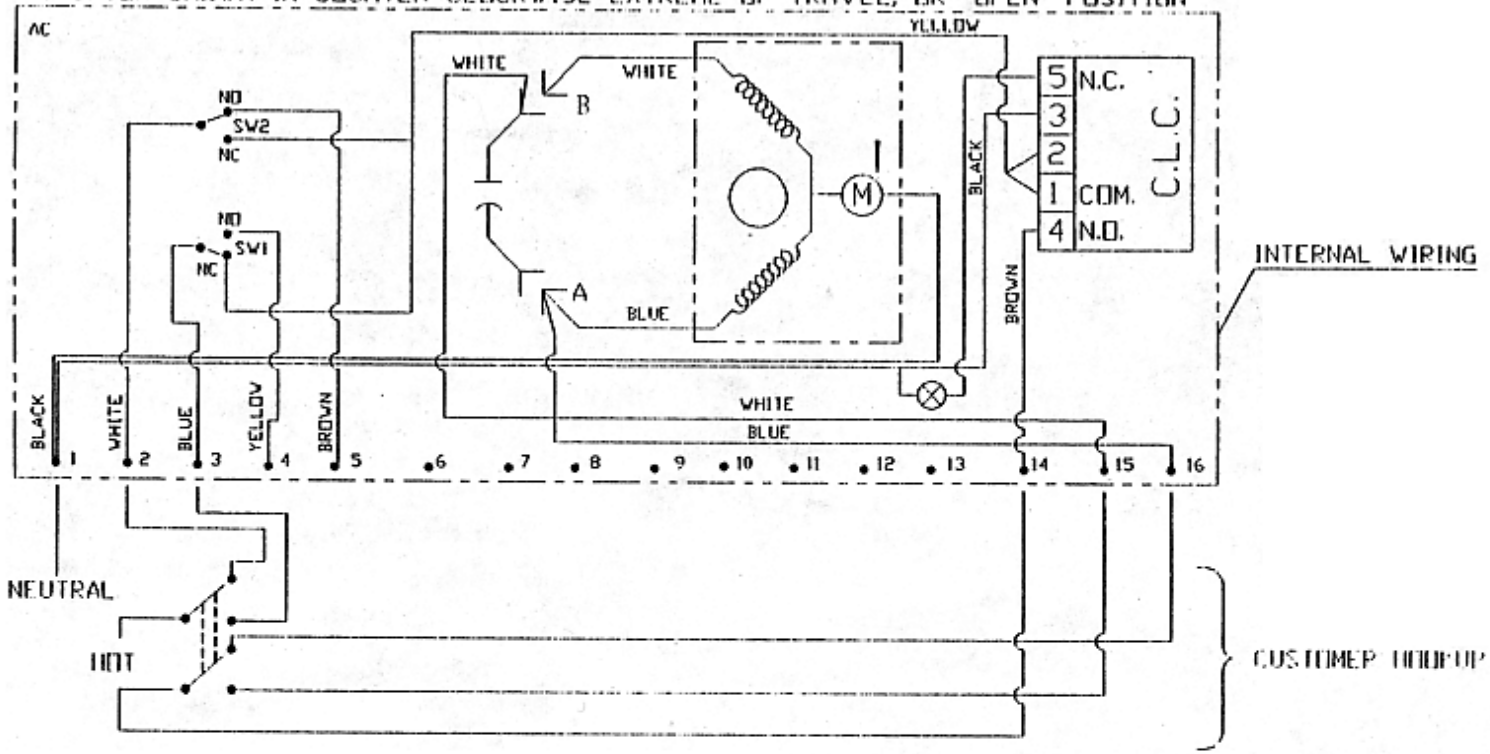

NOTE: 1. EACH ACTUATOR MUST BE POWERED THRU ITS OWN INDIVIDUAL SWITCH CONTACTS TO AVOID CROSS FEED

2. MOTOR HAS A THERMAL PROTECTOR AS SHOWN BY Ⓜ IN DIAGRAM

UNLESS OTHERWISE SPECIFIED
DIMENSIONS ARE IN INCHES TOLERANCES
2 PL DECIMALS ± .01
3 PL DECIMALS ± .005
ANGLES ± .5°
FRACTIONS ± 1/64

MATERIAL

FINISH

THIS DRAWING AND ALL INFORMATION HEREON IS THE PROPERTY OF ASAHI/AMERICA. ANY COPYING, REPRODUCTION OR UNAUTHORIZED USE IS FORBIDDEN WITHOUT WRITTEN CONSENT.

	NAME	DATE
DR	S. SELEZNEV	5/24/96
CHK	Jun Ohki	5/24/96
APPD		
PATH	D:\ELECTRIC	

CHEMLINE PLASTICS

A- & Q-SERIES ACTUATOR WITH CYCLE RATE REGULATOR

SIZE	DWG. NO.	REV
A	0001EL	1

SCALE NTS

SHEET 1 OF 1

WIRING DIAGRAM FOR 12 OR 24VDC ONLY
ACTUATOR SHOWN IN COUNTER-CLOCKWISE EXTREME OF TRAVEL, OR "OPEN" POSITION

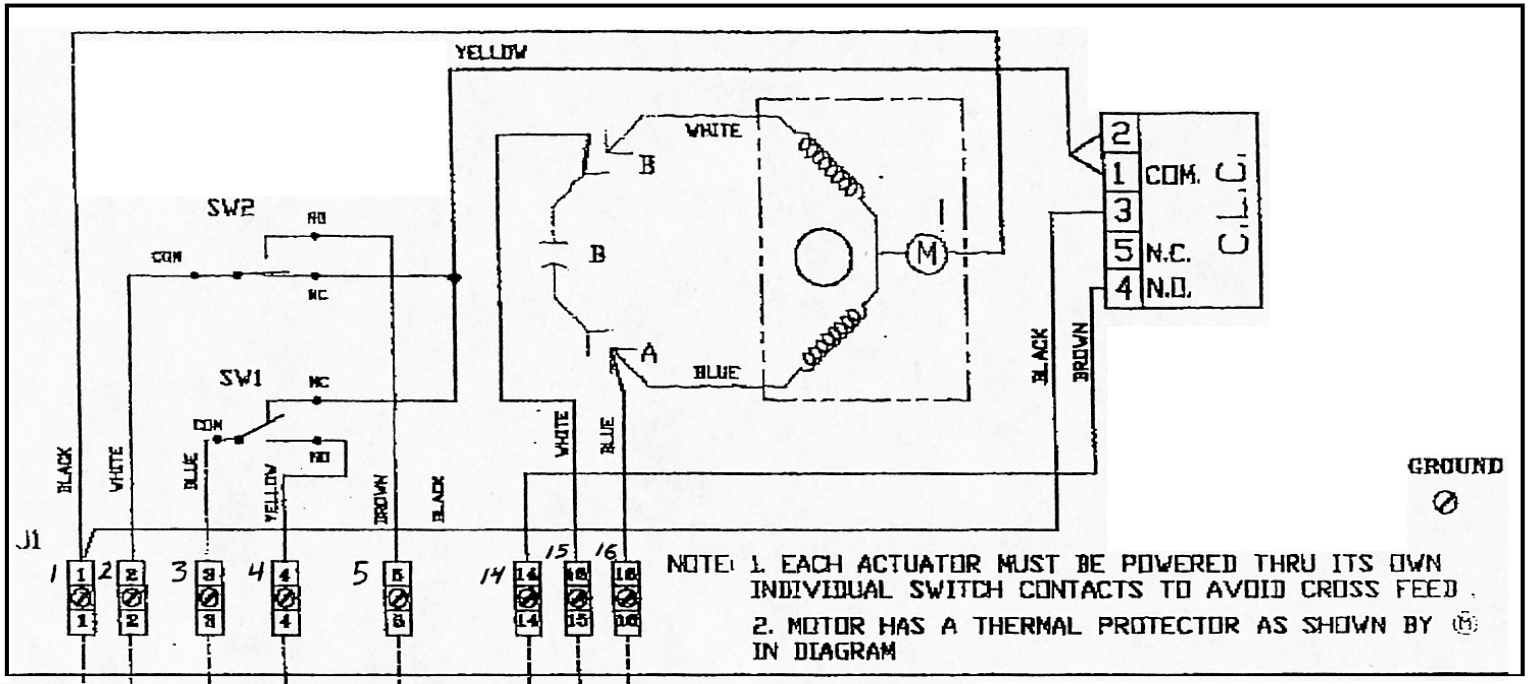

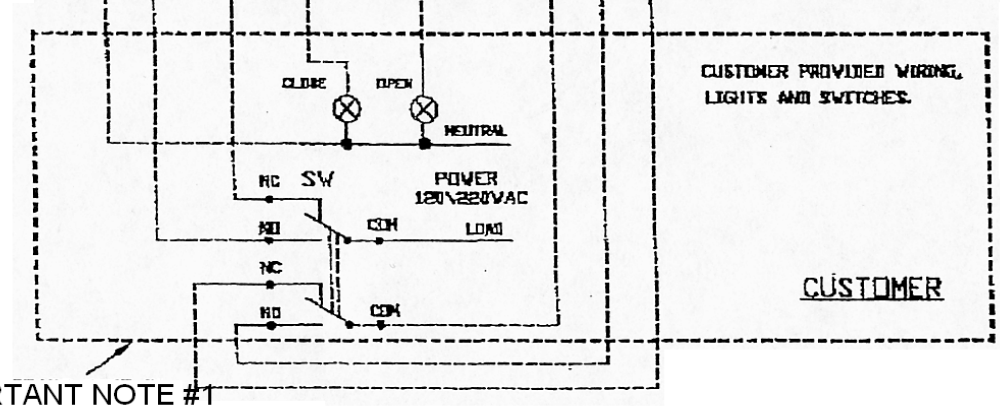

SEE IMPORTANT NOTE #1

SWITCH LOCATION VIEWED
FROM TERMINAL STRIP FRONT

SW-2 CHANNEL OPEN
SW-1 CHANNEL CLOSE

UNLESS OTHERWISE SPECIFIED				THIS DRAWING AND ALL INFORMATION HEREON IS THE PROPERTY OF ASAHI/AMERICA. ANY COPYING, REPRODUCTION OR UNAUTHORIZED USE IS FORBIDDEN WITHOUT WRITTEN CONSENT.			**CHEMLINE PLASTICS**		
DIMENSIONS ARE IN INCHES					NAME	DATE	Q and A-SERIES ACTUATOR WITH CYCLE RATE REGULATOR		
MACHINING TOLERANCES:	2 PL DECIMALS	± .01		DR	V.TCHERNIAEV	08.17.00			
	3 PL DECIMALS	± .005		APPD					
	ANGULAR	± 1/2°		PROD					
	FRACTIONAL	± 1/64					SIZE A	DWG. NO. 03ACWCLC.dwg	REV 0
FABRICATION TOLERANCES:	1/2" – 8"	± 1/4		PATH	AC\03ACWCLC				
	10" AND UP	± 1/2					SCALE	SHEET 1 OF 1	
	ANGULAR	± 1.0°		WO#/CO#					
MATERIAL									
FINISH									

WIRING DIAGRAM FOR 115 VAC

ACTUATOR SHOWN IN COUNTER-CLOCKWISE EXTREME OF TRAVEL, OR "OPEN" POSITION

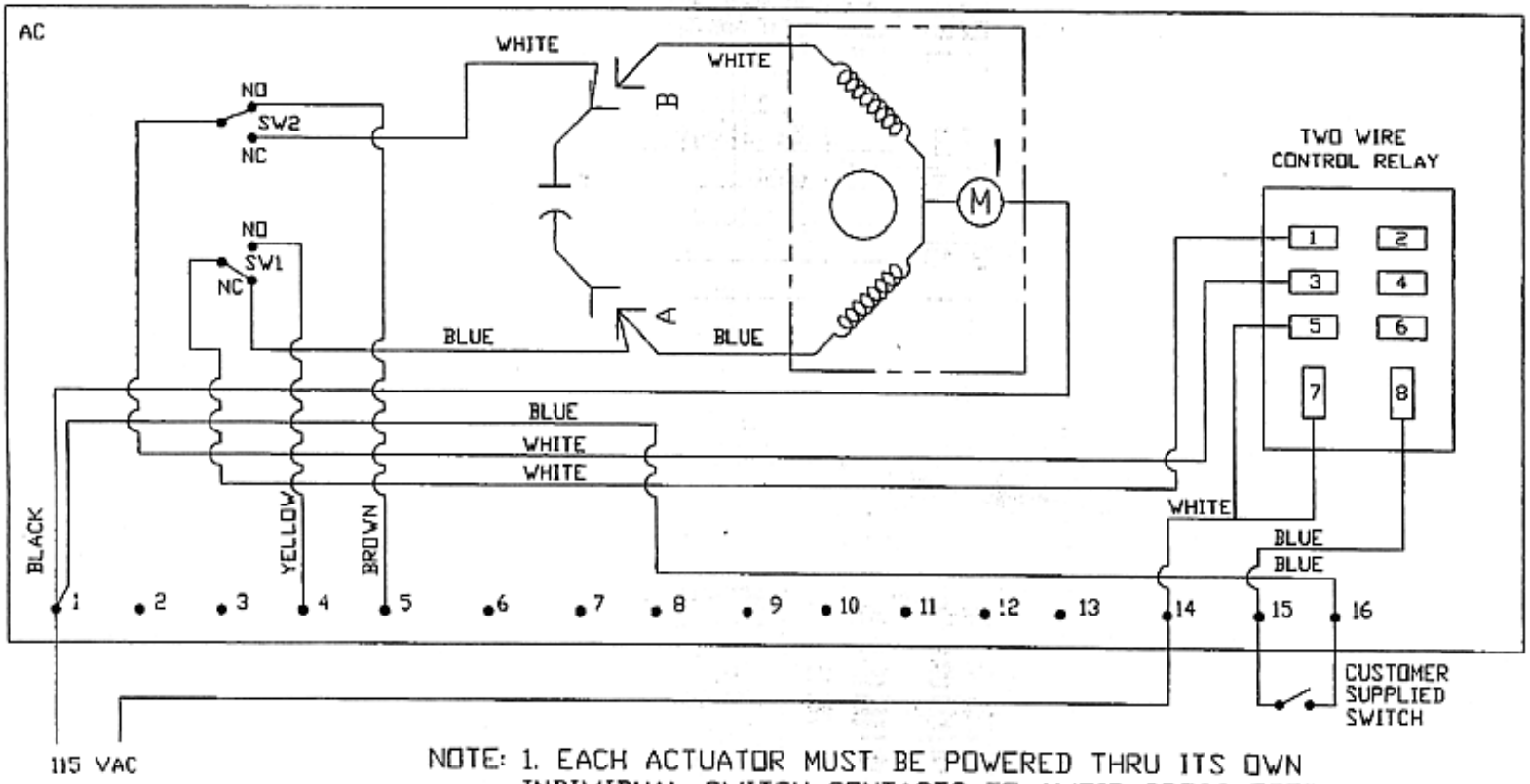

NOTE: 1. EACH ACTUATOR MUST BE POWERED THRU ITS OWN INDIVIDUAL SWITCH CONTACTS TO AVOID CROSS FEED

2. MOTOR HAS A THERMAL PROTECTOR AS SHOWN BY Ⓜ IN DIAGRAM

THIS DRAWING AND ALL INFORMATION HEREON IS THE PROPERTY OF ASAHI/AMERICA. ANY COPYING, REPRODUCTION OR UNAUTHORIZED USE IS FORBIDDEN WITHOUT WRITTEN CONSENT.

	NAME	DATE
DR	A.SELEZNEV	2/25/97
CHK	[signature]	2/28/97
APPD		
FILE	C:\ELECTRIC	

CHEMLINE PLASTICS

115 VAC WIRING DIAGRAM
A & Q SERIES W/ 2-WIRE CONTROL

SIZE	DWG. NO.	REV
A	0018EL	5

SCALE 1=1

SHEET 1 OF 1

(ACTUATOR SHOWN IN COUNTER-CLOCKWISE EXTREME OF TRAVEL, OR 'OPEN' POSITION)

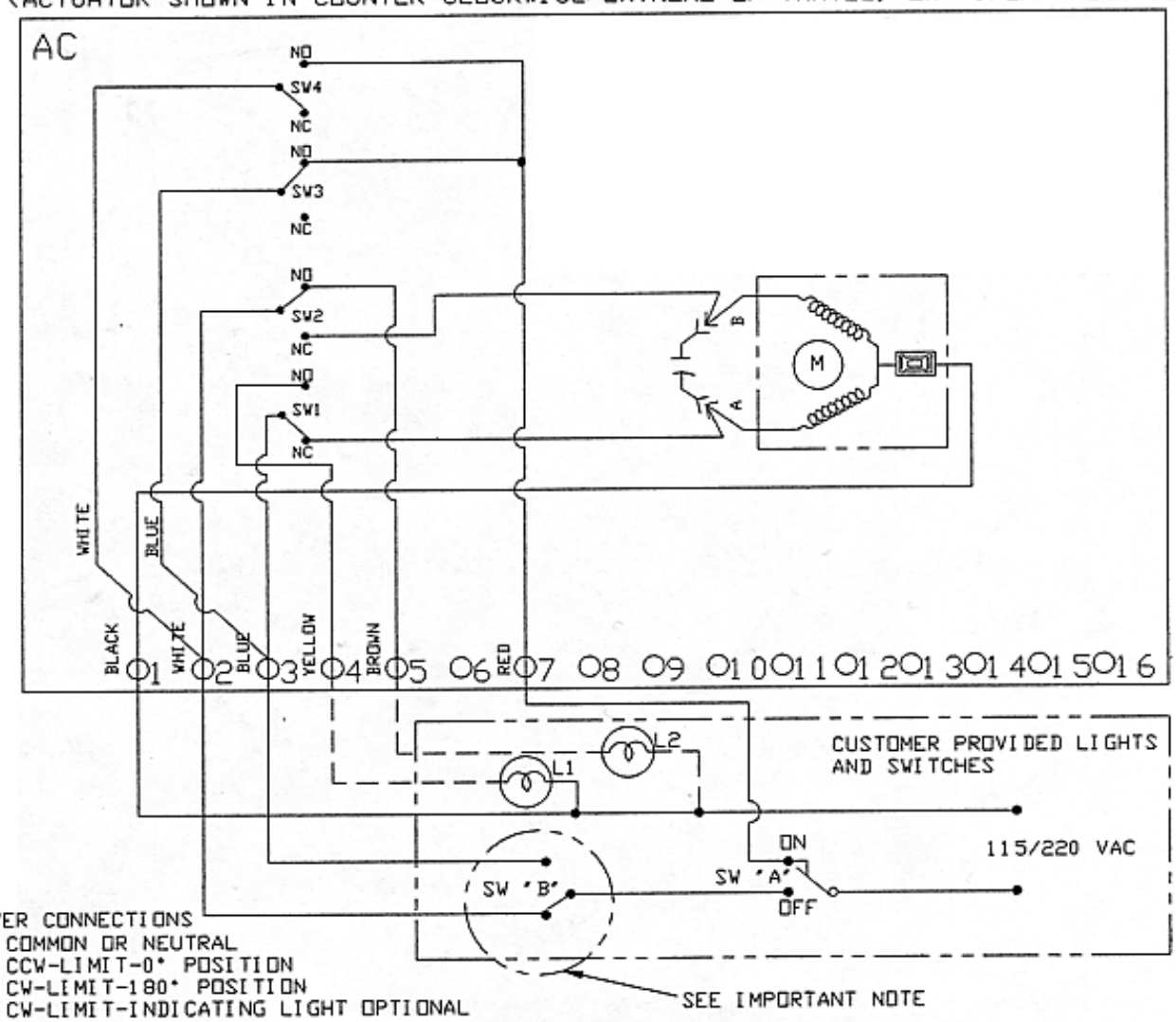

POWER CONNECTIONS
1. COMMON OR NEUTRAL
2. CCW-LIMIT-0° POSITION
3. CW-LIMIT-180° POSITION
4. CW-LIMIT-INDICATING LIGHT OPTIONAL
5. CCW-LIMIT-INDICATING LIGHT OPTIONAL
7. CENTER-OFF-90° POSITION, BOTH DIRECTIONS

IMPORTANT
EACH ACTUATOR MUST BE POWERED THRU ITS OWN INDIVIDUAL SWITCH CONTACTS TO AVOID CROSS FEED
MOTOR HAS A 'THERMAL PROTECTOR' AS SHOWN BY IN DIAGRAM.

SWITCH LOCATION VIEWED FROM TERMINAL STRIP FRONT

SW2	SW4
SW1	SW3

THIS DRAWING AND ALL INFORMATION HEREON IS THE PROPERTY OF ASAHI/AMERICA. ANY COPYING, REPRODUCTION OR UNAUTHORIZED USE IS FORBIDDEN WITHOUT WRITTEN CONSENT.

	NAME	DATE
DR	SS	6/7/96
CHK		
APPD		
FILE	C:\ELECTRIC	
	DO NOT SCALE DRAWING	

CHEMLINE PLASTICS

CENTER-OFF WIRING
A- & Q-SERIES ACTUATOR

SIZE	DWG. NO.	REV
A	CENT-OFF	1

SCALE NTS

SHEET 1 OF 1

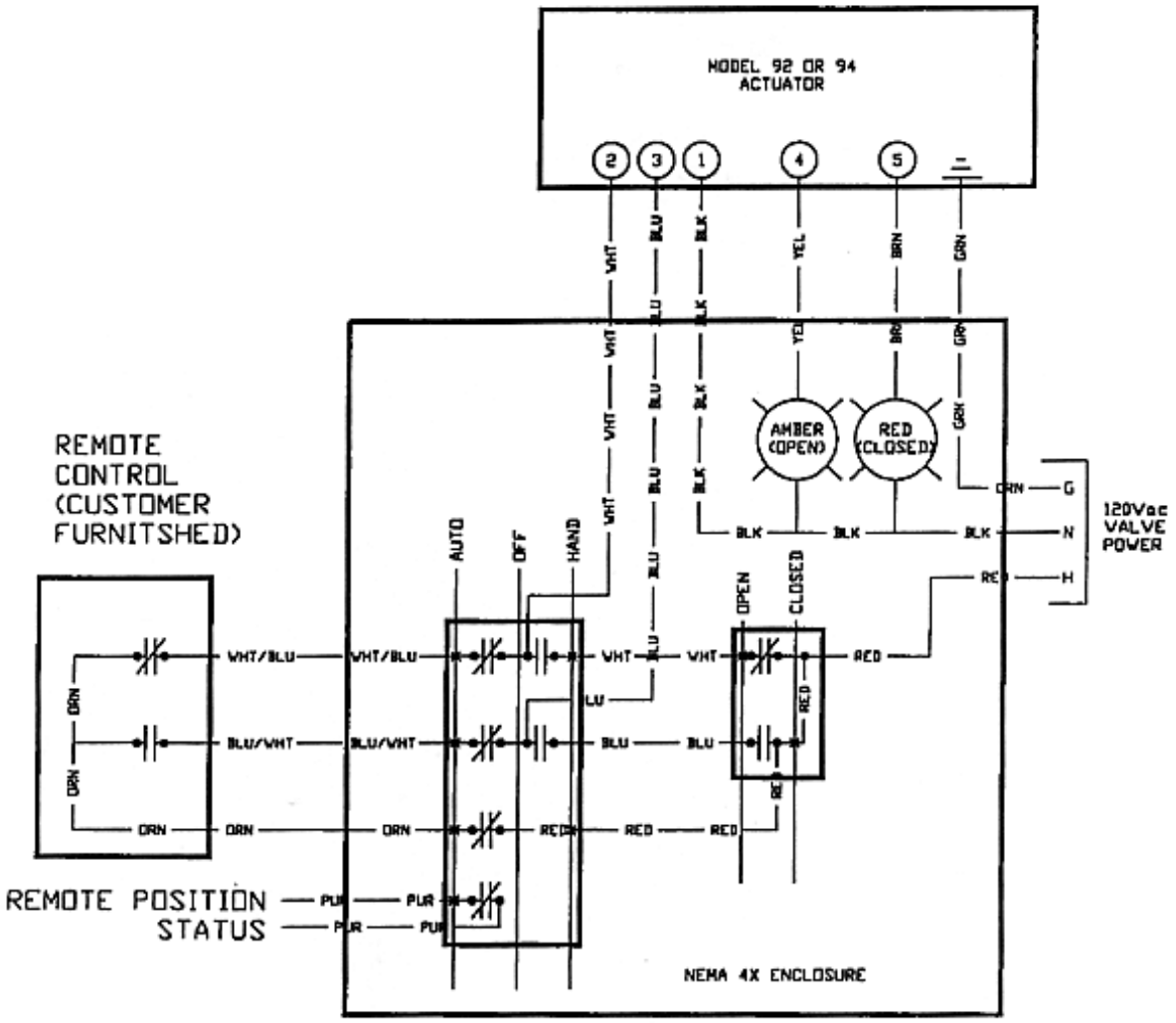

NOTES:
ALL COMPONENTS AND ENCLOSURE ARE NEMA 4X.

ENCLOSURE IS FURNISHED WITH 8 INCH PIG TAIL FOR WIRING CONNECTION.

MANUFACTURER RESERVES THE RIGHT TO CHANGE OR MODIFY PRODUCT DESIGN OR PRODUCT WITHOUT PRIOR NOTICE.

UNLESS OTHERWISE SPECIFIED		THIS DRAWING AND ALL INFORMATION HEREON IS THE PROPERTY OF ASAHI/AMERICA. ANY COPYING, REPRODUCTION OR UNAUTHORIZED USE IS FORBIDDEN WITHOUT WRITTEN CONSENT.			CHEMLINE PLASTICS	
DIMENSIONS ARE IN INCHES			NAME	DATE	MANUAL OVERRIDE STATION MODEL 11-100	
MACHINING TOLERANCES:	2 PL DECIMALS ± .01 3 PL DECIMALS ± .005 ANGULAR ± 1/2° FRACTIONAL ± 1/64	DR	RNH	2MAY2000	SIZE A	DWG. NO. / REV 0
FABRICATION TOLERANCES:	1/2" – 8" ± 1/4 10" AND UP ± 1/2 ANGULAR ± 1.0°	APPD				
MATERIAL		PROD				
FINISH	70 µ" (0.8 µm)	PATH	C:\R13\DRAWINGS		SCALE NONE	SHEET 1 OF 1
		WO#/CO#				

10.10 - C1-3 – CHEMLINE NEEDLE VALVE

CHEMLINE Plastics Limited

Your Pipeline To Quality Valves, Strainers, Flowmeters and Controls

55 Guardsman Road
Thornhill, Ontario
L3T 6L2
Canada
Tel: 905-889-7890
Fax: 905-889-8553

MAINTENANCE INSTRUCTIONS
For Chemline Needle Valves Sizes 1/4" - 3/8" - 1/2"

Maintenance (all sizes):

Refer to **ASSEMBLY DRAWING CNV1 rev 0.** And proceed as follows:

1. Valve can be serviced in line as unit' s complete topworks can be removed in one piece.
2. Remove panel nut (6) and lift off bonnet (4).
3. Handle (2) stem (3) and thread insert (5) will lift out in one piece.
4. Remove and inspect seal (7) for wear and abrasion.
5. Replace seal if necessary.
6. To reassemble valve follow steps 2 through 5 in reverse order.

Note: Seal wear can be compensated for by hand tightening the cap.

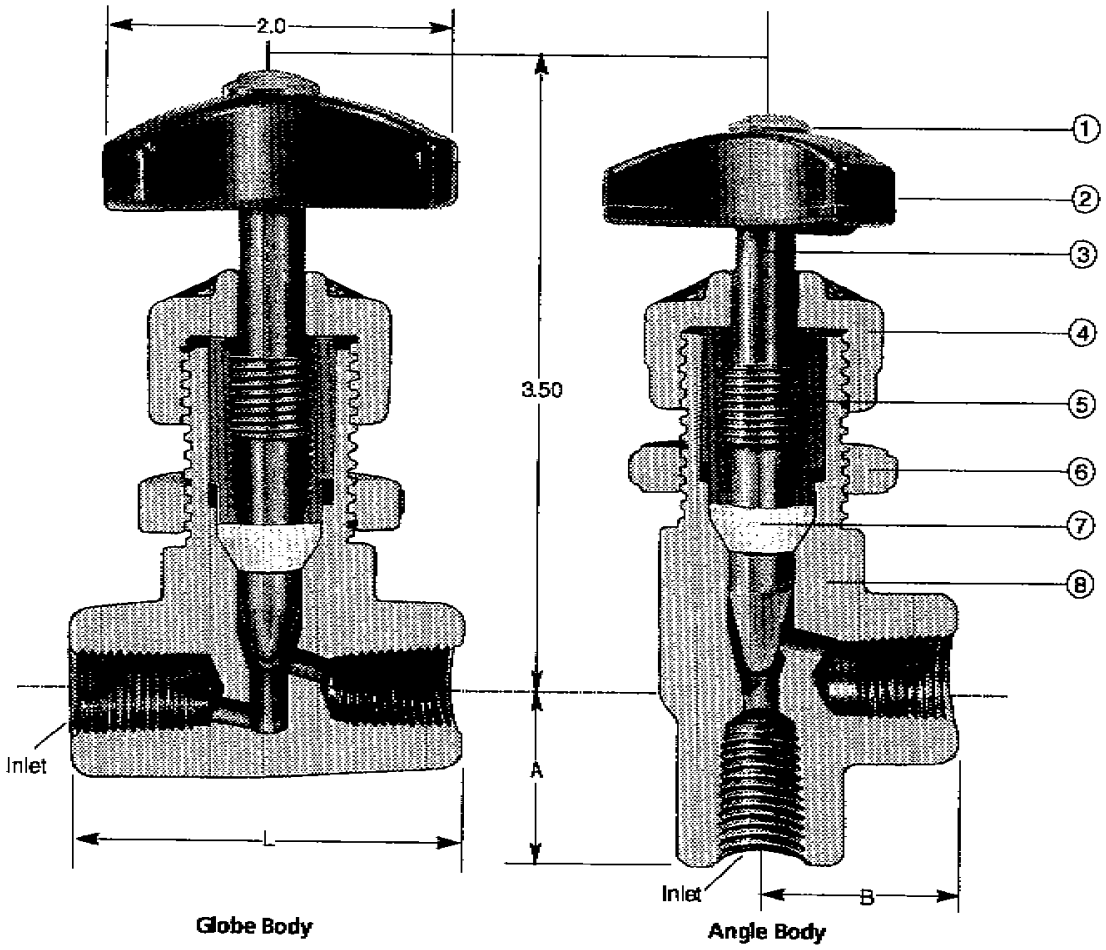

Globe Body

Angle Body

PARTS

No.	Part*	Pcs.	Materials
1	Coloured Button	1	PVC
2	Handle	1	PVC, CPVC, PPG
3	Stem/Needle	1	PVC, CPVC, PPG, PVDF
4	Bonnet	1	PVC, CPVC, PPG
5	Thread Insert	1	Nylon, PPG
6	Panel Nut	1	PVC, CPVC, PPG
7	Seal	1	PTFE
8	Body	1	PVC, CPVC, PPG, PVDF

*Threaded insert in reinforced Nylon for PVC and CPVC valves, PPG for PPG valves.

DIMENSIONS INCHES

Size	L	A	B	Globe	Angle	Outlet Orifice
1/4"	2.33	1.10	1.20	.187	.250	.187
3/8"	2.33	1.10	1.20	.187	.250	.187
1/2"	2.50	1.18	1.25	.218	.250	.218

CHEMLINE NEEDLE VALVES
Sizes 1/4" - 3/8" - 1/2"

CHEMLINE Plastics Limited

Dwg. No.: CNV1

10.11 - C1-4 – CHEMLINE PRESSURE RELIEF VALVE

CHEMLINE Plastics Limited

Your Pipeline To Quality Valves, Strainers, Flowmeters and Controls

55 Guardsman Road
Thornhill, Ontario
L3T 6L2
Canada
Tel: 905-889-7890
Fax: 905-889-8553

MAINTENANCE INSTRUCTIONS
For Chemline 3/8" - 1-1/2" SB Series Pressure Relief Valves

Installation:

1. Always mount a filter or strainer in the line immediately before the valve to avoid damage to the valve from dirt or particles. Valve is spring operated, therefore can be installed in any orientation.

2. **To adjust pressure use the adjustment screw (8) and a pressure gauge**.
   - the valve will be closed at the set pressure and will start to open when the operating pressure rises above the set pressure.
   - connect the compressed air supply to the inlet of the valve. Adjust the flow of the air to the desired set pressure by turning clockwise to increase the set pressure, counterclockwise to decrease it.
   - with the valve being closed, adjust the screw (8) until the valve starts to open. Fix the adjusting screw in place with the locking nut (9).

3. For installation in an application where the temperature is 0° C or less. Check with Chemline Engineering
   Technical staff prior to installation.

Maintenance

Refer to **ASSEMBLY DRAWING SB10/11 rev 0.** And proceed as follows.

1. Loosen and remove cap (10).

2. Loosen counter nut (9) and remove adjustment screw (8).

3. Remove body cap (12a), body bolt (12b), body nut (12c) and washer (12d).

4. Lift up and remove bonnet (2).

5. Remove pressure plate (7a) and ball bearing (7b) to reach relief spring (3).

6. Loosen piston screw (11), remove spring plate (6) and draw piston assembly (5) downward and out of body (1).
   Note: Piston assembly (5) is all parts (5a) outer piston assembly
   (5b) inner piston assembly
   (5c) seat
   (5d) piston o-ring

Piston assembly is removed from body as a unit. It can then be further disassembled into the component parts listed above.

7 Remove diaphragm (4).

8. Remove seal (14) at intermediate flange (13).

9. Inspect all parts for wear and abrasion, replace seals, diaphragm etc. if necessary.

10. To re-assemble valve follow steps 1 through 9 in reverse order.

TROUBLESHOOTING

FAILURE		REASON	REPAIR
VALVE LEAKS AT DIAPHGRAM (4)		CLAMPING PRESSURE FOR DIAPHRAGM (4) TOO LOW.	TIGHTEN SCREWS (12)
PRESSURE RISES ABOVE SET PRESSURE	{A)	VALVE SEAT (5c) & SEALS (14) & (5d) ARE	CHECK SEALS OF PISTON (5) BODY (14) - REPLACE
	(B)	DEFECTIVE DIAPHRAGM (4) LEAKING	REPLACE.
	(C)	PISTON (5) BORE AT BODY (1) DIRTY	DISMANTLE PISTON (5) AND CLEAN BORE
VALVE CLOSED (DOES NOT OPEN)		VALVE MOUNTED IN WRONG DIRECTION.	TURN VALVE IN DIRECTION OF ARROWS
FLUIDS PENETRATE ADJUSTING SCREW (8)		DIAPHRAGM (4) DEFECTIVE.	REPLACE DIAPHRAGM (4)
LEAKING AT PLUG AT VALVE BODY		O-RING SEAL LEAKING	DISMANTLE PLUG AND REPLACE SEAL

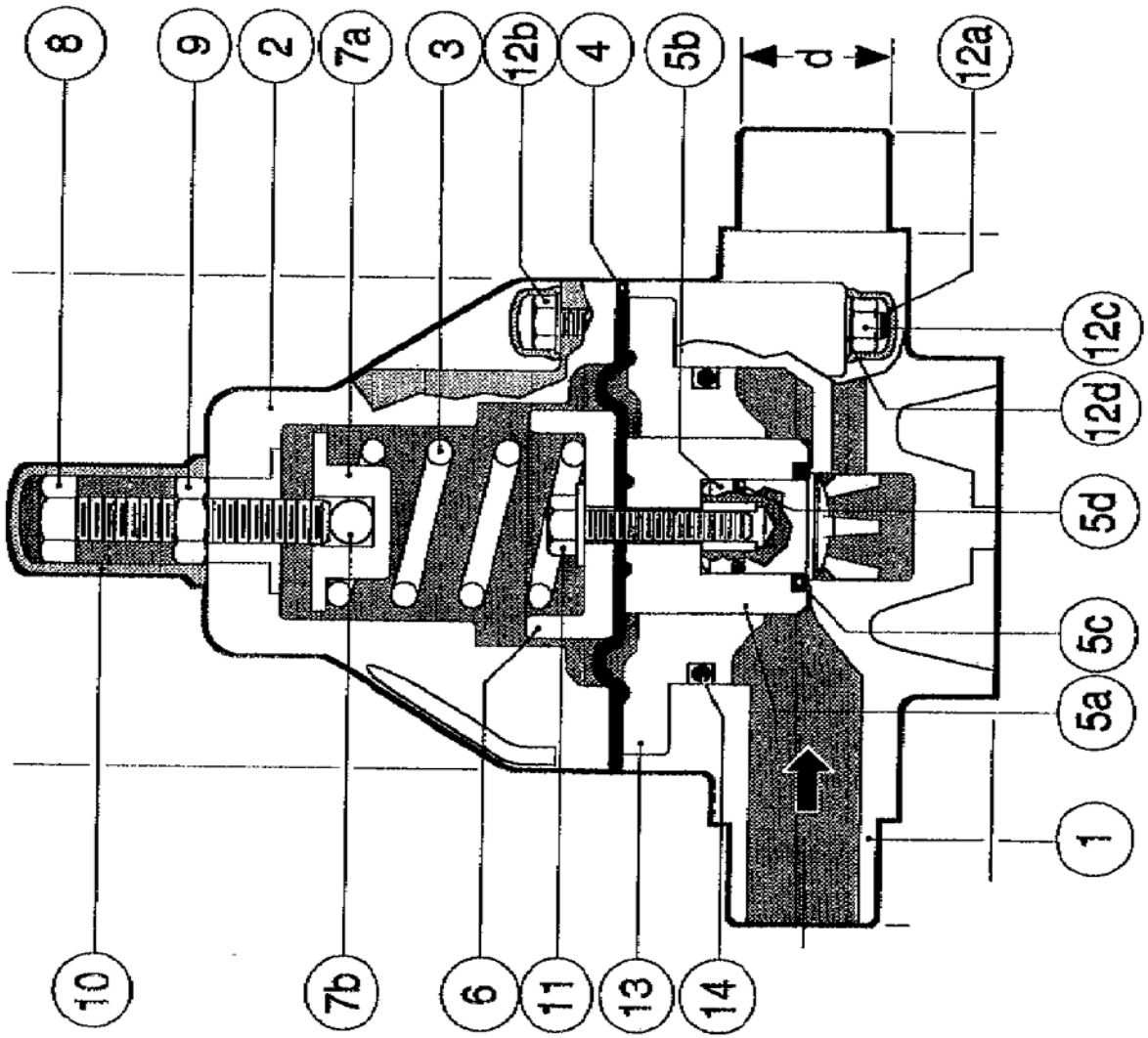

Part	Description	Pcs
1	BODY	1
2	BONNET	1
3	RELIEF SPRING	1
4	DIAPHRAGM	1
5(a)	OUTER PISTON	1
	(PART OF ASSY)	
5(b)	INNER PISTON	1
	(PART OF ASSY)	
5(c)	SEAT	2
	(PART OF ASSY)	
5(d)	PISTON O-RING	2
	(PART OF ASSY)	
6	SPRING PLATE	1
7(a)	PRESS. PLATE	1
7(b)	BALL BEARING	1
8	ADJ. SCREW	1
9	COUNTER NUT	1
10	CAP	1
11	PISTON SCREW	1
12 (a)	BODY CAP	4/6
12 (b)	BODY BOLT	4/6
12 (c)	BODY NUT	4/6
12 (d)	BODY WASHER	4/6
13	INT. FLANGE	2
14	SEAL	2

TITLE: CHEMLINE SB PRESSURE RELIEF VALVES	SCALE		DATE	CHEMLINE PLASTICS
	DR. BY			
REFERENCE: 3/8" - 1-1/2"	CHKD. BY			DWG. NO. SB1011
	APP. BY			REV. 0

10.12 - C1-5 – CHEMLINE ISOLATED PRESSURE GAUGE

CHEMLINE Plastics Limited

Your Pipeline To Quality Valves, Strainers, Flowmeters and Controls

55 Guardsman Road
Thornhill, Ontario
L3T 6L2
Canada
Tel: 905-889-7890
Fax: 905-889-8553

MAINTENANCE INSTRUCTIONS
For Chemline SG Series Gauge Isolator 1/4"and 1/2"

Maintenance:

Refer to drawing on page 2 of the **SG Gauge Isolator Data Page**

1. Gauge isolators can be mounted and filled with glycerine at Chemline prior to delivery, or isolators can be mounted and filled on site.
2. Remove isolator from valve.
3. To disassemble isolator remove gauge (6) from upper chamber/bonnet (3).
4. Separate bonnet (3) from body (1).
5. Drain glycerin (or other fluid) from both chambers (1 & 3), prior to removing diaphragm (2).
6. Check teflon diaphragm (2) for wear and replace if necessary.
7. Refill upper chamber (3) and replace diaphragm (2).
8. To reassemble diaphragm follow steps 1 through 4 in reverse, to hand-tight plus ¼ turn (approx. 30 in-lb).

10.13 - C1-6 – CHEMLINE BALL VALVE

CHEMLINE Plastics Limited

Your Pipeline To Quality Valves, Strainers, Flowmeters and Controls

55 Guardsman Road
Thornhill, Ontario
L3T 6L2
Canada
Tel: 905-889-7890
Fax: 905-889-8553

MAINTENANCE & INSTALLATION INSTRUCTIONS
For Chemline Type 21 True Union Ball Valve Size 1/2"- 4"

Installation:

1. Make sure all surfaces are clear and free of debris prior to installing valve in pipeline. Pipeline should be empty at connection site.

2. Valve should be set to the closed position.

3. When installing valves with socket connections, ensure that only PVC solvent cement is used. Excessive use of cement can cause sticking in the valve interior, therefore use caution when applying cement, especially on vertical piping.

4. For threaded connections we recommend the use of sealing tape and, with the use of a strap wrench, to tighten no more than 2 full turns past finger-tight. Use of a pipe wrench can deform the pipe or union nut and cause damage to the valve and/or connection(s).

5. Flanged connections should be torqued evenly and in a symmetrical pattern with a torque wrench and as per the figure and chart below:

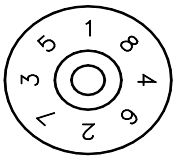

RECOMMENDED FLANGE BOLT TORQUES

VALVE SIZE	FLANGE	BOLT TORQUE	IN FT-LB	AXIAL MISALIGNMENT	PARALLELISM (INCH)
	PSI - 50	PSI - 100	PSI – 150		
1½	11	13	14	0.04	0.03
2	13	14	16	0.04	0.03
2½	13	14	16	0.04	0.03
3	18	20	22	0.04	0.03
4	20	20	22	0.04	0.04
5	22	15	29	0.04	0.04
6	25	15	32	0.04	0.04
8	25	32	40	0.06	0.04
10	25	32	40	0.06	0.04
12	29	36	43	0.06	0.04
14	32	36	43	0.06	0.04
16	36	[58-85 PSI]	58	0.06	0.04
18	36	[58-85 PSI]	-		
20	72	-	-		
24	72	-	-		

Maintenance Instructions Type 21 Ball Valve cont.

Maintenance:

Refer to **ASSEMBLY DRAWING T21V Rev. 0.** And proceed as follows:

1. Turn valve to the closed position.
2. Unscrew union nut (5) from both ends of valve.
3. Remove end connectors (4).
4. On solid mold end, remove face o-ring (9). This completely disassembles this end of valve.
5. Pull upward on handle (7) to remove.
6. On opposite end of valve, remove face o-ring (9) and use handle (7) as a spanner wrench to remove carrier (3).
7. Remove carrier o-ring (10).
8. Remove seat (6) and seat cushion (12) to expose ball (2).
9. Remove ball (2) by pushing from solid molded end of body.
10. Remove stem (6) by pushing it down into body (1).
11. Remove stem o-rings 11(A) and 11(B) from groves in stem.
12. Remove other seat (6) and seat cushion (12).
13. Inspect all parts for wear and replace as necessary.
14. Before re-assembling valve, lubricate all o-rings with Dow Corning III silicone compound or equivalent.
15. To re-assemble valve follow steps 1 through 10 in reverse order.

NOTE: If mounting actuator on mounting flange (13), make sure handle (7) is removed and stem (6) and actuator are aligned.

After replacing carrier (3), the face of the carrier should remain slightly projected from the end of the body. Make sure the ball rotates smoothly with only a touch of resistance.

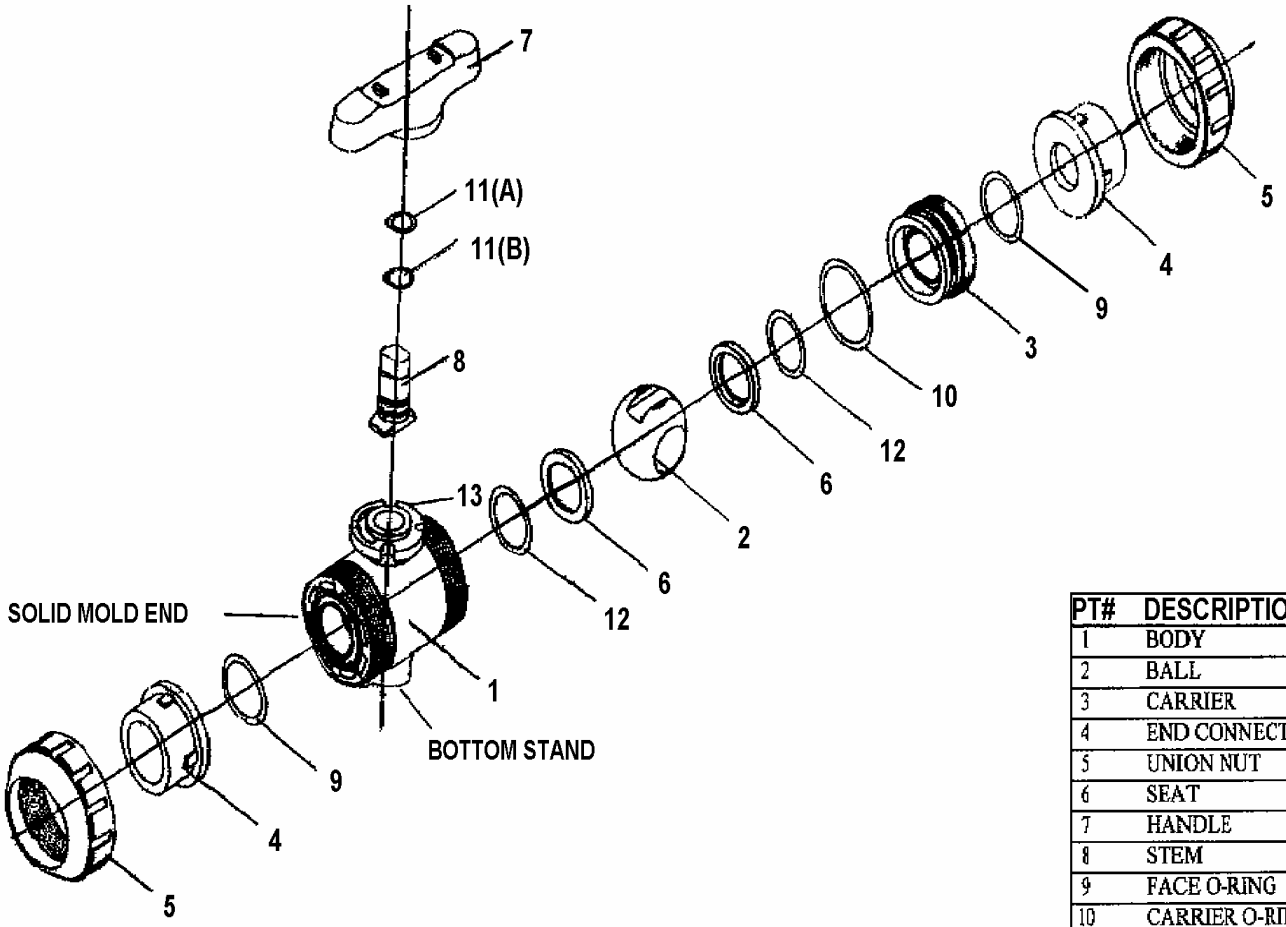

PT#	DESCRIPTION	QTY	MATERIALS
1	BODY	1	PVC/PP/PVDF/CPVC
2	BALL	1	PVC/PP/PVDF/CPVC
3	CARRIER	1	CPE/EPDM/VITON/HYP.
4	END CONNECTOR	2	PVC/PP/PVDF/CPVC
5	UNION NUT	2	PVC/PP/PVDF/CPVC
6	SEAT	1	CPE/EPDM/CITON/HYP.
7	HANDLE	1	PVC/PP/PVDF/CPVC
8	STEM	1	PVC/PP/PVDF/CPVC
9	FACE O-RING	2	CPE/EPDM/VITON/HYP.
10	CARRIER O-RING	1	CPE/EPDM/VITON/HYP.
11(A)	STEM O-RING (Upper)	1	CPE/EPDM/VITON/HYP.
11(B)	STEM O-RING (Lower)	1	CPE/EPDM/VITON/HYP.
12	SEAT CUSHION	2	CPE/EPDM/VITON/HYP
13	MOUNTING FLANGE	1	PVC/PP/PVDF/CPVC

TITLE CHEMLINE TYPE 21 TRUE UNION BALL VALVE	SCALE		DATE	CHEMLINE PLASTICS	
	DR. BY				
REFERENCE SIZES 1/2" - 4"	CHKD BY			DWG. NO. T21V	REV. 0
	APP. BY				

10.14 - C1-7 – CHEMLINE CHECK VALVE

CHEMLINE Plastics Limited

Your Pipeline To Quality Valves, Strainers, Flowmeters and Controls

55 Guardsman Road
Thornhill, Ontario
L3T 6L2
Canada
Tel: 905-889-7890
Fax: 905-889-8553

INSTALLATION AND MAINTENANCE INSTRUCTIONS
For Chemline 2" - 12" Wafer Check Valves

Installation

1. The WP Wafer Check Valves are designed to fit between flat face flanges.

2. Low torque flange gaskets are required for PP wafer check valves. PVC wafer check valves contain a body O-Ring seal and do not require low torque flange gaskets.

3. Centre by means of body rim (external) diameter.

4. Assemble between DIN/ANSI flanges. Use soft gaskets and tighten.

5. Flange bolts should be well lubricated. With plastic flanges it is important to use washers.

6. Utilization of other flanges (i.e. DIN 2512/12/14), threaded. flared or slip-on flanges require a disc stem locking device.

7. Tighten bolts with a torque wrench evenly and in symmetrical pattern as shown below.

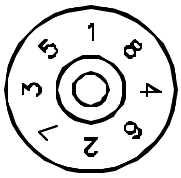

8. The following should be observed when assembling on to the discharge side of the pump:
   (a) Never assemble directly on to pump flange.
   (b) Never assemble on to a bend or elbow.
   (c) Allow an additional distance of 5 - 10 times the nominal width before installing the wafer check valve.

Installation & Maintenance Wafer Check Valves cont.

9. Distance pieces are required when polypropylene check valves are fitted in plastic pipe systems.

10. The recommended torques are tabled below:

Recommended Flange Bolt Torques

Valve Size	Bolt Torque (ft-lb)	
	PVC	PP
2”	20-30	12.3
2-1/2”	20-30	14.5
3”	20-30	14.5
4”	20-30	14.5
5”	-	18.1
6”	33-50	18.1
8”	33-50	21.7
10”	53-75	25.4
12”	80-100	29.0

MAINTENANCE

Refer to **DRAWING WC1 rev 0.** And proceed as follows:

1. Remove spring (6) by putting tension on lower portion and pushing upward.

2. Loosen screws (5) and remove disc (4).

3. Inspect disc and O-rings (3) for wear and replace if necessary.

4. Inspect body O-rings (2) for wear and replace if necessary.

5. To re-assemble valve repeat steps 4 through 1 in reverse. Do not over tighten screws (5).

PVC, PP & PVDF WAFER CHECK VALVES

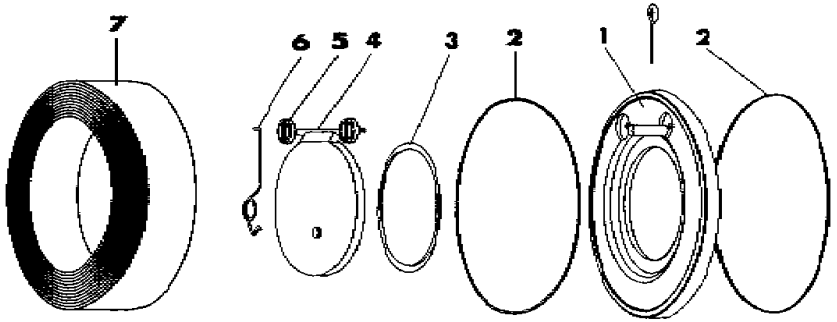

PART	DESCRIPTION	PCS.	MATERIAL
1	BODY	1	PVC, PP, PVDF
2	O-RING	2	EPDM, VITON, VT
3	DISC O-RING	1	EPDM, VITON, VT
4	DISC	1	PVC, PP, PVDF
5	SCREW	1	SS 316
6	SPRING	1	SS 316
7	SPACER	1	PVC, PP

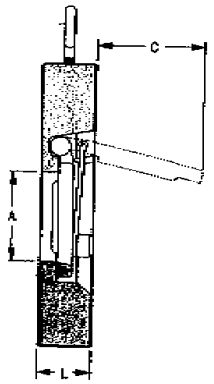

TITLE: CHEMLINE WAFER CHECK VALVES 2"-12"	SCALE		DATE	CHEMLINE PLASTICS	
	DR. BY				
REFERENCE	CHKD. BY			DWG. NO.	REV.
	APP. BY			WC1	0

10.15 - E1-1 – ENDRESS & HAUSER ANALYZING TRANSMITTER

BA00445C/07/EN/16.13
71212859

Valid as of:
Softwareversion 01.04.00

Operating Instructions
Liquiline CM442/CM444/CM448

Universal four-wire multichannel controller
Maintenance & diagnostics

Endress+Hauser
People for Process Automation

About this manual

This manual describes all the tasks you must perform for maintenance, diagnostics and repair.

A description of the following is provided here:
- General troubleshooting
- Overview of the diagnostic messages
- Description of the information of the "Diagnostics" menu
  - Diagnostics list
  - Logbooks
  - System information
  - Sensor information
  - Systemtest/Reset
- Maintenance
- Spare parts and accessories

This manual does not include the following:
For a description of the following menus, refer to the listed manuals.
- Display/Operation
  --> Operating Instructions BA00444C "Commissioning"
- Basic setup
  --> Operating Instructions BA00444C "Commissioning"
- Setup/General settings
  --> Operating InstructionsBA00450C "Operation & settings"
- Inputs
  --> Operating InstructionsBA00450C "Operation & settings"
- Outputs
  --> Operating InstructionsBA00450C "Operation & settings"
- Additional functions
  --> Operating InstructionsBA00450C "Operation & settings"
- Calibration
  --> Operating Instructions BA00451C "Calibration"
- Expert
  --> Internal Service Manual

Table of contents

1 Diagnostics and troubleshooting 4
1.1 General troubleshooting 4
1.2 Diagnostic information on the onsite display 13
1.3 Diagnostic information via web browser 13
1.4 Diagnostic information via fieldbus . . . 13
1.5 Adjusting diagnostic information 14
1.6 Overview of diagnostic information . . . 16
1.7 Pending diagnostic messages 33
1.8 Diagnostics list 33
1.9 Event logbook 34
1.10 Simulation 37
1.11 Reset measuring instrument 39
1.12 Device information 39
1.13 Firmware history 41

2 Maintenance 43
2.1 Calibration 43
2.2 Cleaning 43

3 Repair 45
3.1 Spare parts 45
3.2 Return 48
3.3 Disposal 48

4 Accessories 49
4.1 Weather protection cover 49
4.2 Post mounting kit 49
4.3 Measuring cable 49
4.4 Sensors 50
4.5 Additional functionality 54
4.6 Software 56
4.7 Other accessories 57

Index 58

1 Diagnostics and troubleshooting

The transmitter continuously monitors its own functions.
If a diagnostics message occurs, the display alternates between the diagnostics message and the measured value in the measuring mode.
The color of the display background changes to red if a diagnostics message for error category "F" occurs.

1.1 General troubleshooting

1.1.1 Troubleshooting

A diagnostic message appears on the display or via the fieldbus indicating that the measured values are not plausible, or you identify a fault.

1. See the Diagnostics menu for the details on the diagnostic message.
   ↳ Follow the instructions to rectify the problem.
2. If this does not help: Search for the diagnostic message under "Overview of diagnostic information" (→ 16) in this manual. Use the message number as a search criterion. Ignore the letters indicating the Namur error category.
   ↳ Follow the troubleshooting instructions provided in the last column of the error tables.
3. If the measured values are implausible, the onsite display is faulty or you encounter other problems, search for the faults under "Process errors without messages" (→ 4) or "Device-specific errors" (→ 13).
   ↳ Follow the recommended measures.
4. Contact the Service Department if you cannot rectify the error yourself. Only cite the error number.

1.1.2 Process errors without messages

pH/ORP measurement

Problem	Possible cause	Tests and/or remedial measures
Display deviates from reference measurement	Incorrect calibration	Repeat the calibration. Where necessary, check and repeat the calibration with the reference device.
	Sensor fouled	Clean the sensor.
	Temperature measurement	Check the temperature measured values of both devices.
	Temperature compensation	Check the settings for temperature compensation and adjustment for both devices.

Problem	Possible cause	Tests and/or remedial measures
Measuring chain zero-point cannot be adjusted	Contaminated reference system	Test with new sensor
	Junction clogged	Clean or grind junction
	Asymmetric sensor voltage too high	Clean junction or test with another sensor
No change or subtle change in display	– Sensor fouled – Sensor old – Sensor defective (reference lead)	Clean the sensor.
	Reference has low level of KCl	Check KCl supply: 0.8 bar (12 psi) over medium pressure
Measuring chain slope: – Cannot be adjusted – To low – No slope	Device input defective	Check device directly.
	– Sensor old – Hair-line crack in the glass membrane	Renew sensor.
Constant, incorrect measured value	Sensor does not immerse properly or protection cap not removed	Check installation position, remove protection cap.
	Air pockets in assembly	Check assembly and orientation.
	Ground fault at or in device	Perform test measurement in isolated vessel, with buffer solution if applicable.
	Hair-line crack in the glass membrane	Renew sensor.
	Device in impermissible operating condition (does not respond when key pressed)	Switch off device and switch it on again.
Incorrect temperature value	Sensor defective	Replace sensor
Fluctuations in measured value	Interference on signal output cable	Check cable routing, route cable separately if necessary.
	Interference potential in medium	Eliminate source of interference or ground medium as close as possible to sensor.
No current output signal	Cable disconnected or short-circuited	Disconnect cable and measure directly at device.
	Output defective	See "Device-specific errors" section.
Fixed current output signal	Current simulation active	Switch off simulation.
Incorrect current output signal	Total load in current loop too high	Measure the load and reduce it to the permitted value if necessary (--> Technical data, Operating Instructions "Commissioning").
	EMC (interference coupling)	Check wiring. Identify and eliminate cause of interference.

Conductivity measurement

Problem	Possible cause	Tests and/or remedial measures
Display deviates from reference measurement	Incorrect calibration	Repeat the calibration. Where necessary, check and repeat the calibration with the reference device.
	Sensor fouled	Clean the sensor.
	Temperature measurement	Check the temperature measured values of both devices.
	Temperature compensation	Check the settings for temperature compensation and adjustment for both devices.
Display deviates from reference measurement	Polarization fields	Use suitable sensor: ▪ Larger cell constant ▪ Graphite instead of stainless steel (observe material resistance properties)
Implausible measured values: – Measured value constantly 000 – Measured value too low – Measured value too high – Measured value frozen – Current output value not as expected	Short-circuit/moisture in sensor	Check sensor.
	Short-circuit in cable or socket	Check cable and socket.
	Disconnection in sensor	Check sensor.
	Disconnection in cable or socket	Check cable and socket.
	Incorrect cell constant setting	Check cell constant.
	Incorrect output assignment	Check assignment of measured value to current signal.
	Air pockets in assembly	Check assembly and orientation.
	Ground fault at or in device	Measure in isolated vessel.
	Device in impermissible operating condition (does not respond when key pressed)	Switch off device and switch it on again.
Incorrect temperature value	Sensor defective	Replace sensor

Problem	Possible cause	Tests and/or remedial measures
Measured value in process incorrect	No/incorrect temperature compensation	ATC: select type of compensation; if linear, set suitable coefficients. MTC: set process temperature.
	Incorrect temperature measurement	Check temperature measured value.
	Bubbles in medium	Suppress formation of bubbles by: – Gas bubble trap – Creating counterpressure (orifice plate) – Measurement in bypass
	Flow rate too high (can lead to bubble formation)	Reduce flow rate or select less turbulent mounting location.
	Voltage potential in medium (only for conductive)	Ground medium close to sensor.
	Sensor fouling or buildup on sensor	Clean sensor (see "Cleaning the conductivity sensors" section).
Fluctuations in measured value	Interference on signal output cable	Check cable routing, route cable separately if necessary.
	Interference potential in medium	Eliminate source of interference or ground medium as close as possible to sensor.
	Interference on measuring cable	Connect cable shield as per wiring diagram.
No current output signal	Cable disconnected or short-circuited	Disconnect cable and measure directly at device.
	Output defective	See "Device-specific errors" section.
Fixed current output signal	Current simulation active	Switch off simulation.
Incorrect current output signal	Total load in current loop too high	Measure the load and reduce it to the permitted value if necessary (--> Technical data, Operating Instructions "Commissioning").
	EMC (interference coupling)	Check wiring. Identify and eliminate cause of interference.

Oxygen measurement

Problem	Possible cause	Tests and/or remedial measures
Display value - - - -	Sensor defective	Test with new sensor
	Sensor cable disconnected	Check cable or cable extension.
	Incorrect sensor connection	Check the connection at the input module (--> BA "Commissioning", "Wiring" section).
	Electronics module defective	Replace the module.

Problem	Possible cause	Tests and/or remedial measures
No change or subtle change in display	– Sensor fouled – Sensor old (membrane)	▪ Clean the sensor. ▪ If necessary: – Change electrolyte, change membrane cap (amperometric sensor) – Change fluorescence cap (optical sensor)
Constant, incorrect measured value	Device in impermissible operating condition (does not respond when key pressed)	Switch off device and switch it on again.
Measured value too low	Membrane fouled	Clean or replace cap
	Electrolyte exhausted or contaminated	Change electrolyte
	Anode coating worn	Repolarize sensor
	Black anode coating	Regenerate sensor in factory
Measured value too high	Air pocket under membrane	Clean sensor, optimize installation where necessary
	Polarization not complete	Wait until polarization time elapses (--> Technical data in sensor operating manual)
Implausible measured value	Incorrect temperature measurement	Check/correct value.
	Incorrect altitude setting	Incorrect calibration Reset and repeat calibration.
	Incorrect air pressure	
Incorrect temperature value	Incorrect sensor connection	Check the connection at the input module (--> BA "Commissioning", "Wiring" section).
	Temperature sensor defective	Replace sensor
Fluctuations in measured value	Interference on signal output cable	Check cable routing, route cable separately if necessary.
	Interference potential in medium	Eliminate source of interference or ground medium as close as possible to sensor.
No current output signal	Cable disconnected or short-circuited	Disconnect cable and measure directly at device.
	Output defective	See "Device-specific errors" section.
Fixed current output signal	Current simulation active	Switch off simulation.
Incorrect current output signal	Total load in current loop too high	Measure the load and reduce it to the permitted value if necessary.
	EMC (interference coupling)	Disconnect both output cables and measure directly at device.

Chlorine measurement

Problem	Possible cause	Tests and/or remedial measures
Display value - - - -	Sensor defective	Test with new sensor
	Sensor cable disconnected	Check cable or cable extension.
	Incorrect sensor connection	Check the connection at the input module (--> BA "Commissioning", "Wiring" section).
	Electronics module defective	Replace the module.
Slope too low	Sensor was in chlorine-free water or in air.	Short conditioning over (not in!) chlorine bleach, wait for adjustment time in water to elapse before calibration.
Values do not match the DPD control measurement	Measurement is performed without pH compensation while DPD measurement is always buffered to pH 6.3.	Measure the chlorine value with pH compensation
DPD measured value far too high	Organic chlorination agents (possibly also only used temporarily or for shock chlorination). In this instance, no correlation between actual free available chlorine, DPD measurement and amperometric measurement. DPD value up to 5 times too high.	Use free (gaseous) chlorine or chlorine from inorganic chlorine compounds.
Chlorine value too high	Membrane defective	Replace membrane cap
	Polarization not complete	Wait for the polarization time to elapse
	Alien oxidizing agents	Analyze medium
	Shunt in chlorine sensor	Replace sensor
Chlorine value too low	Measuring chamber not closed	Refill and screw closed carefully
	Air bubble outside in front of membrane	Remove air bubble, select a better installation position if possible.
	Air bubble inside membrane	Refill and screw closed so that it is air-free
No change or subtle change in display	Sensor fouled	Clean sensor
	Sensor old	Replace sensor
	Sensor defective (ref. lead)	Replace sensor
Constant, incorrect measured value	Sensor does not immerse properly or protection cap not removed	Check installation position, remove protection cap
	Air pockets in assembly	Check assembly and orientation
No current output signal	Cable disconnected or short-circuited	Disconnect cable and measure directly at device.
	Output defective	See "Device-specific errors" section.

Problem	Possible cause	Tests and/or remedial measures
Fixed current output signal	Current simulation active	Switch off simulation.
Incorrect current output signal	Total load in current loop too high	Measure the load and reduce it to the permitted value if necessary (--> Technical data, Operating Instructions "Commissioning").
	EMC (interference coupling)	Check wiring. Identify and eliminate cause of interference.

Measurement with ion-selective sensors

Problem	Possible cause	Tests and/or remedial measures
Temperature value always 20 °C or incorrect	– Temperature sensor not connected or connected incorrectly – Temperature sensor defective – Cable to temperature sensor defective	– Check temperature sensor and replace where necessary – Replace the cable
Display values deviate from reference measurement	Incorrect calibration	Repeat the calibration. Where necessary, check and repeat the calibration with the reference device.
	Electrode connected to the wrong slot	Compare terminal assignment to setting on transmitter
	Electrodes fouled	Clean the electrodes.
	Incorrect temperature measurement	Check the temperature measured values of both devices.
	Temperature compensation	Check the settings for temperature compensation and adjustment for both devices.
	pH compensation (only for ammonium), pH measurement	Check the settings and the pH measurement if necessary.
No change or subtle change in display	– Electrodes fouled – Electrodes too old – Electrodes defective	– Clean the electrodes – Replace membrane cap and electrolyte – Replace the electrodes
Measured value drift	Reference of pH electrode defective	Replace the pH electrode
	Contamination of reference electrode or ion-selective electrodes	Application problem
Constant, incorrect measured value	Sensor does not immerse properly or protection cap of the pH electrode not removed	Check installation position, remove protection cap.
	Air bubble in the electrode between membrane and inner terminal leads	Tap the electrolyte in the electrode towards the membrane
	Membrane cap or electrode defective	Replace the membrane cap or electrode.

Problem	Possible cause	Tests and/or remedial measures
Measuring chain zero-point not stable and cannot be adjusted	Sensor does not immerse properly or protection cap of the pH electrode not removed	Check installation position, remove protection cap.
	Air bubble in the electrode between membrane and inner terminal leads	Tap the electrolyte in the electrode towards the membrane
	Membrane cap or electrode defective	Replace the membrane cap or electrode.
	Electrodes contaminated	Test with new electrodes
	Reference of pH electrode used	Replace the pH electrode
	Electrode connected to the wrong slot	Compare terminal assignment to setting on transmitter
Display fluctuates greatly	Air bubbles in the electrodes	Tap the electrolyte in the electrode towards the membrane
Fluctuations in measured value	Interference on signal output cable	Check cable routing, route cable separately if necessary.
	Interference potential in medium	Eliminate source of interference or ground medium as close as possible to sensor.
No current output signal	Cable disconnected or short-circuited	Disconnect cable and measure directly at device.
	Output defective	See "Device-specific errors" section.
Fixed current output signal	Current simulation active	Switch off simulation.
Incorrect current output signal	Total load in current loop too high	Measure the load and reduce it to the permitted value if necessary (--> Technical data, Part 1).

Turbidity, SAC and nitrate measurement

Problem	Possible cause	Tests and/or remedial measures
Display value - - - -	Sensor defective	Test with new sensor
	Sensor cable disconnected	Check cable or cable extension.
	Incorrect sensor connection	Check the connection at the input module (--> BA "Commissioning", "Wiring" section).
	Electronics module defective	Replace the module.
No change or subtle change in display	Sensor fouled	Clean the sensor.
Constant, incorrect measured value	Device in impermissible operating condition (does not respond when key pressed)	Switch off device and switch it on again.

Problem	Possible cause	Tests and/or remedial measures
Implausible measured value	Sensor not calibrated or incorrectly calibrated	Calibration with original sample might be necessary for concentration or solids content.
	Sensor fouled	Clean sensor
	Sensor installed in "dead zone" or air pocket in assembly or flange	Check installation position, move sensor to area that receives good flow. Pay attention when mounting in horizontal pipes
	Incorrect sensor orientation	Align sensor: ▪ Normal media: Direct flow to measuring window ▪ For high solids content: Align measuring window at angle of 90° to flow
Incorrect temperature value	Incorrect sensor connection	Check the connection at the input module (--> BA "Commissioning", "Wiring" section).
	Temperature sensor defective	Replace sensor
Fluctuations in measured value	Interference on signal output cable	Check cable routing, route cable separately if necessary.
	Irregular flow / turbulence / air bubbles / large solid particles	Select a better mounting location or reduce turbulence, use a large measured value damping factor if necessary Set gas bubble threshold to 100 %
No current output signal	Cable disconnected or short-circuited	Disconnect cable and measure directly at device.
	Output defective	See "Device-specific errors" section.
Fixed current output signal	Current simulation active	Switch off simulation.
Incorrect current output signal	Total load in current loop too high	Measure the load and reduce it to the permitted value if necessary.
	EMC (interference coupling)	Disconnect both output cables and measure directly at device.
Value switches to zero and back to measured value	Air bubbles	Do not mount sensor above aeration discs

1.1.3 Device-specific errors

Problem	Possible cause	Tests and/or remedial measures
Dark display	No supply voltage	Check if supply voltage applied.
	Basic module defective	Replace basic module
Values appear on display but: – Display does not change and / or – Device cannot be operated	Module not wired correctly	Check modules and wiring.
	Impermissible operating system condition	Switch off device and switch it on again.
Implausible measured values	Inputs defective	First perform tests and take measures as outlined in "Process-specific errors" section Measuring input test: – Connect the Memocheck Sim CYP03D to the input and use this to test its function.
Current output, incorrect current value	Incorrect adjustment	Check with integrated current simulation, connect mA meter directly to current output.
	Load too large	
	Shunt / short to ground in current loop	
No current output signal	Basic module defective	Check with integrated current simulation, connect mA meter directly to current output.

1.2 Diagnostic information on the onsite display

Up-to-date diagnostic events are displayed along with their status category, diagnostic code and short text. Clicking on the Navigator lets you retrieve more information and tips on remedial measures.

1.3 Diagnostic information via web browser

The same information as for the onsite display is available via the web server.

1.4 Diagnostic information via fieldbus

Diagnostic events, status signals and more information are transmitted according to the definitions and technical capability of the respective fieldbus systems

1.5 Adjusting diagnostic information

1.5.1 Classification of diagnostics messages

More detailed information on the current diagnostics messages displayed is provided in the DIAG/Diagnostics list menu.

In accordance with Namur specification NE 107, the diagnostics messages are characterized by:
- Message number
- Error category (letter in front of the message number)
  - **F** = (Failure) a malfunction has been detected
    The measured value of the specific channel is no longer reliable. The cause of the malfunction is to be found in the measuring point. Any controller connected should be set to manual mode.
  - **M** = (Maintenance required) Action should be taken as soon as possible
    The device stills measures correctly. Immediate measures must not be taken. However, proper maintenance efforts would prevent a possible malfunction in the future.
  - **C** = (Function check) (No error)
    Maintenance work is being performed on the device. Wait until the work has been completed.
  - **S** = (Out of specification) The measuring point is being operated outside its specification
    Operation is still possible. However, you run the risk of increased wear, shorter operating life or lower accuracy levels. The cause of the problem is to be found outside the measuring point.
- Message text

If you contact the Service Department, please cite the message number only. Since you can individually change the assignment of an error to an error category, the Service Department cannot use this information.

1.5.2 Adjusting diagnostic behavior

All the diagnostics messages are assigned to specific error categories at the factory. Since other settings might be preferred depending on the application, error categories and the effect errors have on the measuring point can be configured individually. Furthermore, every diagnostics message can be disabled.

Example

The controller returns diagnostics message 531 "Logbook full". You want to change this message so that an error is not indicated on the display for example.

1. Go to:
   - Menu/Setup/General settings/Extended setup/Diagnostics/Device behavior
     for device-specific diagnostics messages (as in this example)
   - Menu/Setup/Inputs/<sensor type>/Extended setup/Diagnostics settings/Diag. behavior
     for sensor-specific diagnostics messages.
2. Select the diagnostics message and press the navigator button.
3. Decide:
   a. Should the message be deactivated?
   b. Do you want to change the error category?
   c. Should an error current be output?
   d. Do you want to trigger a cleaning program?
4. Deactivate the message, for example (Diagnostics message to "Off").

Configuration options

The list of diagnostic messages displayed depends on the path selected. There are device-specific messages, and messages that depend on what sensor is connected.

Path: ... /Extended setup/Diagnostics settings/Diag. behavior

Function	Options	Info
List of diagnostic messages		Select the message to be changed. Only then can you make the settings for this message.
Diag. code	Read only	
Diagnostic message	Options ▪ On ▪ Off **Factory setting** Depends on the message	You can deactivate or reactivate a diagnostics message here. Deactivating means: ▪ No error message in the measuring mode ▪ No error current at the current output
Error current	Options ▪ On ▪ Off **Factory setting** Depends on the message	Decide whether an error current should be output at the current output if the diagnostic message display is activated.
Status signal	Options ▪ Maintenance (M) ▪ Out of specification (S) ▪ Function check (C) ▪ Failure (F) **Factory setting** Depends on the message	The messages are divided into different error categories in accordance with NAMUR NE 107. Decide whether you want to change a status signal assignment for your application.

Path: ... /Extended setup/Diagnostics settings/Diag. behavior

Function	Options	Info
Diag. output	Options ▪ None ▪ Alarm relay ▪ Relay 1 to n (depends on the device version) **Factory setting** None	You can use this function to select an output to which the diagnostic message should be assigned. Before you can assign the message to an output, you must first configure a relay output to "Diagnostics" (Menu/Setup/Outputs, assign the "Diagnostics" function and set the Operating mode to "as assigned").
An alarm relay is always available, regardless of the device version. Other relays are optional.		
Cleaning program	Options ▪ None ▪ Cleaning 1 ▪ Cleaning 2 ▪ Cleaning 3 ▪ Cleaning 4 **Factory setting** None	Decide whether the diagnostic message should trigger a cleaning program. You can define the cleaning programs under: Menu/Setup/Additional functions/Cleaning.
Detail information	Read only	Here you can find more information on the diagnostic message and instructions on how to resolve the problem.

1.6 Overview of diagnostic information

1.6.1 Device-specific, general diagnostics messages

No.	Message	Factory settings			Tests or remedial measures
		Cat.	Diag. on/off	Error current	
202	Selftest active	F	On	Off	Wait for self-test to be finished
216	Hold active	C	On	Off	Output values and status of the channel are on hold
241	Device error	F	On	On	Internal device error 1. Update the software 2. Contact the Service Department 3. Replace the backplane (Service)
242	Software incomp.	F	On	On	
243	Device error	F	On	On	
261	Electr. module	F	On	On	Electronics module defective 1. Replace the module 2. Contact the Service Department
262	Module connect.	F	On	On	Electronics module not communicating 1. Check the module, replace it if necessary 2. Contact the Service Department

No.	Message	Factory settings			Tests or remedial measures
		Cat.	Diag. on/off	Error current	
263	Electr. module	F	On	On	Wrong kind of electronics module 1. Replace the module 2. Contact the Service Department
284	Firmware update	M	On	Off	Update completed successfully
285	Update error	F	On	On	Firmware update failed 1. Repeat update 2. SD card error --> use another card 3. Incorrect firmware --> repeat with suitable firmware 4. Contact the Service Department
302	Battery low	M	On	Off	Buffer battery of real time clock is low The date and time are lost if the power is interrupted. --> Contact the Service Department (battery replacement)
304	Module data	F	On	On	At least 1 module has incorrect configuration data 1. Check the system information 2. Contact the Service Department
305	Power consum.	F	On	On	Total power consumption too high 1. Check installation 2. Remove sensors/modules
306	Software error	F	On	On	Internal firmware error --> Contact the Service Department
370	Intern. Voltage	F	On	On	Internal voltage outside the valid range --> Check supply voltage
373	Electr. temp.	M	On	Off	High electronics temperature --> Check ambient temperature and energy consumption
374	Sensor check	F	On	Off	No measurement signal from sensor -> Check the sensor connection -> Check sensor, replace if necessary
401	Reset to default	F	On	On	Factory reset is performed
406	Param. active	C	Off	Off	--> Wait for configuration to be finished
407	Diag. active	C	Off	Off	--> Wait for maintenance to be finished
412	Writing backup	F	On	Off	--> Wait for the write process to be finished
413	Reading backup	F	On	Off	--> Wait

No.	Message	Factory settings			Tests or remedial measures
		Cat.	Diag. on/off	Error current	
460	Curr. under-run	S	On	Off	Reasons ▪ Sensor in air ▪ Air pockets in assembly ▪ Sensor fouled ▪ Incorrect flow to sensor Measures 1. Check sensor installation 2. Clean sensor 3. Adjust assignment of current outputs
461	Current exceeded	S	On	Off	
462	Output Deviation	S	On	Off	When the current output is read back, the value deviates from the target value displayed. Possible reasons: Current load outside specification, short-circuit or open current loop, module defective 1. Check installation of current loop 2. Check module 3. Contact the Service Department
502	No text catalog	F	On	On	--> Contact the Service Department
503	Language change	M	On	Off	Language change failed --> Contact the Service Department
530	Logbook at 80%	M	On	Off	1. Save the logbook to the SD card and then delete the logbook in the device 2. Set memory to ring memory 3. Deactivate logbook
531	Logbook full	M	On	Off	
532	License error	M	On	Off	--> Contact the Service Department
540	Parameter save	M	On	Off	Configuration saving has failed, --> repeat
541	Parameter load	M	On	Off	Configuration successfully loaded
542	Parameter load	M	On	Off	Configuration loading has failed, --> repeat
543	Parameter load	M	On	Off	Configuration loading aborted
544	Parameter reset	M	On	Off	Factory default successful
910	Limit switch	S	On	Off	Limit switch activated
921	Pump bracket	F	On	On	The pump bracket is detected as open. ▪ Pump bracket open ▪ Reed contact defective -> Close the pump bracket -> Contact the Service Department
969	Modbus Watchdog	S	Off	Off	The device did not receive a Modbus telegram from the master within the specified time. The status of modbus process values received is set to invalid.

No.	Message	Factory settings			Tests or remedial measures
		Cat.	Diag. on/off	Error current	
970	Input Overload	S	On	On	Current input overloaded The current input is switched off from 23 mA due to overload and reactivated automatically when a normal load is present.
971	Input low	S	On	On	Current input too low At 4 to 20 mA, the input current is less than the lower error current --> Check the input for short-circuits.
972	Input > 20 mA	S	On	On	Current output range exceeded
973	Input < 4 mA	S	On	On	Current output range undershot
974	Diag. confirmed	C	Off	Off	User has acknowledged the message displayed in the measuring screen.
975	Device reset	C	Off	Off	Device reset
976	PFM value high	S	On	Off	Pulse frequency modulation: output signal exceeded/undershot. Measured value outside the specified range. Reasons: sensor in air, air pockets in assembly, incorrect flow to sensor, sensor fouled 1. Clean sensor 2. Check plausibility 3. Adjust the PFM configuration.
977	PFM value low	S	On	Off	
990	Deviation limit	F	On	On	Redundancy: limit value of percentage deviation exceeded
991	CO2 conc. range	F	On	On	CO_2 concentration (degassed conductivity) outside the measuring range
992	pH calc range	F	On	On	pH calculation outside the measuring range
993	rH calc range	F	On	On	rH calculation outside the measuring range
994	Dual cond range	F	On	On	Dual conductivity outside the measuring range

1.6.2 Sensor-specific diagnostics messages

Abbreviations used for sensor types

- P ... pH/ORP (general)
  - P (glass) ... glass electrode
  - P (ISFET) ... ISFET sensor
- C ... Conductivity (general)
  - C (cond.) ... Conductive sensor
  - C (ind.) ... Inductive sensor
- O ... Oxygen (general)
  - O (opt.) ... Optical sensor
  - O (amp.) ... Amperometric sensor
- N ... Nitrate
- T ... Turbidity and solids
- S ... SAC
- U ... Interface
- I ... ISE
- Cl ... Chlorine

No.	Message	Factory settings			Sensor type	Tests or remedial measures
		Cat.	Diag.	Error current		
002	Sensor unknown	F	On	On	All	Replace sensor
004	Sensor problem	F	On	On	All	
005	Sensor data	F	On	On	All	Sensor data invalid 1. Check the firmware compatibility for the sensor and transmitter, load suitable firmware if necessary 2. Reset the sensor to factory setting, disconnect the sensor and reconnect it 3. Update the transmitter date 4. Replace sensor
010	Sensor scanning	F	Off	On	All	Wait for initialization to be finished
012	Writing data	F	On	On	All	Could not write sensor data 1. Repeat write process 2. Replace sensor
013	Sensor type	F	On	On	All	Replace sensor, making sure correct sensor type is used
018	Sensor not ready	F	On	On	All	Sensor communication blocked 1. Sensor fails tag check. Replace. 2. Internal software error. Contact Service Department
022	Temp. sensor	F	On	On	P, C, O, I, Cl	Temperature sensor defective Replace sensor

No.	Message	Factory settings			Sensor type	Tests or remedial measures
		Cat.	Diag.	Error current		
061	Sensor electr.	F	On	On	All	Sensor electronics defective Replace sensor
062	Sensor connect.	F	On	On	All	1. Check sensor connection 2. Contact the Service Department
081	Initialization	F	On	On	All	Wait for initialization to be finished
100	Sensor comm.	F	On	On	All	Sensor not communicating 1. Check sensor connection 2. Check sensor plug 3. Contact the Service Department
101	Sensor incompat.	F	On	On	All	1. Update the sensor firmware 2. Replace sensor 3. Contact the Service Department
102	Calib. Timer	M	On	Off	All	Calibration interval elapsed. Measurement can still take place. Calibrate sensor
103	Calib. timer	M	On	Off	All	Calibration interval will elapse soon. Measurement can still take place. Calibrate sensor
104	Calib. validity	M	On	Off	All	Validity of last calibration expired. Measurement can still take place. Calibrate sensor
105	Calib. validity	M	On	Off	All	Validity of last calibration will expire soon. Measurement can still take place. Calibrate sensor
106	Sensor TAG	F	On	On	All	Sensor has invalid tag or tag group 1. Replace sensor 2. Use new sensor with identical design 3. Deactivate tag check
107	Calib. active	C	On	Off	P, C, O, I, Cl	Wait for calibration to be finished
108	Sterilization	M	On	Off	P, C, O	Specified number of sterilizations will soon be reached. Measurement can still take place. Replace sensor
109	Sterilizat. cap	M	On	Off	O (amp.)	Specified number of sterilizations for the cap is reached. Measurement can still take place. Replace membrane cap
110	Channel init.	F	On	On	All	Initialization of channel failed, operation is not possible --> Contact the Service Department

No.	Message	Factory settings			Sensor type	Tests or remedial measures
		Cat.	Diag.	Error current		
114	Temp.offset high	M	On	Off	All except U	Calibration alarm: Limit values for temperature offset exceeded 1. Check temperature sensor 2. Replace sensor
115	Temp. offset low	M	On	Off	All except U	
116	Temp. slope high	M	On	Off	All except U	Calibration alarm: Limit values for temperature slope exceeded Sensor old or defective 1. Repeat calibration 2. Replace sensor
117	Temp. slope low	M	On	Off	All except U	
118	Sensor glass	F	On	On	P (glass)	Glass breakage warning, impedance of pH glass too low Measuring can continue until the alarm (118) occurs. 1. Inspect sensor for hair-line cracks and breakage 2. Check medium temperature 3. Replace sensor
119	Sensor check	M	On	Off	P (glass)	
120	Sensor reference	F	On	On	P (glass)	Reference warning, impedance of reference too low Measuring can continue until the alarm (120) occurs 1. Check reference for clogging/contamination 2. Clean reference/junction 3. Replace sensor
121	Sensor reference	M	On	Off	P (glass)	
122	Sensor glass	F	On	On	P (glass)	Impedance limit values exceeded/undershot Measuring can continue until the alarm (122, 124) occurs. 1. Inspect sensor for hair-line cracks and breakage 2. Check limit values and change where necessary 3. Replace sensor
123	Sensor glass	M	On	On	P (glass)	
124	Sensor glass	M	On	Off	P (glass)	
125	Sensor glass	F	On	On	P (glass)	
126	Sensor check	M	On	Off	P (glass)	Sensor condition check (SCC), poor sensor condition Glass membrane fouled or dry, junction blocked 1. Clean sensor, regenerate 2. Replace sensor
127	Sensor check	M	On	Off	P (glass)	Sensor condition check (SCC), adequate sensor condition
128	Sensor leakage	F	On	On	P (ISFET), O (amp.)	ISFET leak current alarm Defective due to gate abrasion or damage Replace sensor

No.	Message	Factory settings			Sensor type	Tests or remedial measures
		Cat.	Diag.	Error current		
129	Sensor leakage	F	On	Off	P (ISFET), O (amp.)	ISFET leak current warning Measuring can continue until the alarm occurs
130	Sensor supply	F	On	On	P, O, I, Cl	Poor sensor power supply 1. Check sensor connection 2. Replace sensor
131	Sensor calib.	M	On	Off	O (opt.)	Limit values for sensor relaxation time (fluorescence decay time) exceeded/undershot Reasons: high oxygen content, incorrect calibration 1. Repeat calibration 2. Replace sensor cap 3. Replace sensor
132	Sensor calib.	M	On	Off	O (opt.)	
133	Sensor signal	F	On	On	O (opt.)	No signal (fluorescence decay) 1. Replace sensor cap 2. Contact the Service Department
134	Sensor signal	M	On	Off	O (opt.)	Low signal amplitude. Measurement can still take place. 1. Replace sensor cap 2. Contact the Service Department
135	Sensor temp.	S	On	On	O	Temperature outside specification 1. Check process 2. Check installation
136	Sensor temp.	S	On	On	O	
137	Sensor LED	F	On	On	O (opt.)	Sensor LED: no voltage Contact the Service Department
138	Sensor LED	F	On	On	O (opt.)	Sensor LED: no power Contact the Service Department
140	Sensor check	F	On	On	O	Sensor range errors Contact the Service Department
141	Polarization	F	On	On	C (cond.)	Polarization warning The measured value is distorted at high conductivity levels. Use a sensor with a larger cell constant
142	Sensor signal	F	On	On	C	No conductivity displayed Reasons: sensor in air, sensor defective 1. Check installation 2. Replace sensor
143	Sensor check	F	On	Off	C	Sensor self-test error 1. Replace sensor 2. Contact the Service Department
144	Cond. out of rng	S	Off	On	C	Conductivity outside the measuring range Use a sensor with a suitable cell constant

No.	Message	Factory settings			Sensor type	Tests or remedial measures
		Cat.	Diag.	Error current		
146	Sensor temp.	S	Off	Off	C, N, T, S	Temperature outside specification 1. Check temperature 2. Check measuring chain 3. Replace sensor type
147	Sensor check	F	On	On	C (ind.)	Coil transmission current too high Reasons: transmission coil short-circuit, inductance too low 1. Replace sensor 2. Contact the Service Department
148	Sensor check	F	On	On	C (ind.)	Coil transmission current too low Reasons: transmission coil interrupted, inductance too high 1. Replace sensor 2. Contact the Service Department
149	Sensor LED	F	On	On	T	Sensor LED error 1. Replace sensor 2. Contact the Service Department
151	Sensor buildup	F	On	On	T	Coating, high amount of fouling 1. Clean sensor 2. Replace sensor 3. Contact the Service Department
152	Sensor data	M	Off	Off	C (ind.)	No calibration data Perform air set calibration
153	Sensor failure	F	On	On	N, T, S	Sensor strobe lamp defective Reasons: deterioration, end of operating life, mechanical interference/vibration 1. Replace sensor 2. Contact the Service Department
154	Sensor data	M	Off	Off	C	Factory calibration is used Perform calibration
155	Sensor failure	F	On	On	N, T, S	Sensor defective Error with analog evaluation 1. Replace sensor 2. Contact the Service Department
156	organ. pollution	M	On	On	N, T, S	Excessive organic fouling Reasons: sensor fouling, high organic content, incorrect orientation 1. Clean sensor 2. Install automatic cleaning 3. Check application
157	Filter change	M	On	Off	N, S	Optical filter must be replaced Reasons: long period of operation, moisture in sensor 1. Replace sensor 2. Contact the Service Department

No.	Message	Factory settings			Sensor type	Tests or remedial measures
		Cat.	Diag.	Error current		
158	Sensor check	F	On	On	N, T, S	Invalid measured value 1. Check sensor power supply 2. Restart device 3. Contact the Service Department
159	Sensor check	F	On	On	N, T, S	Uncertain measured value Reasons: sensor fouling, incorrect application 1. Clean sensor 2. Check application
160	Sensor data	F	On	On	N, T, S, Cl	No calibration data Reasons: data deleted 1. Select other data record 2. Use factory calibration 3. Contact the Service Department
161	Filter change	F	On	Off	N, T, S	Filter change necessary Reasons: long period of operation, moisture in sensor 1. Replace sensor 2. Contact the Service Department
162	Install.factor	M	On	Off	C (ind.)	Installation factor exceeded/undershot, alarm Reason: distance between wall and sensor too small (< 15 mm) 1. Check pipe diameter 2. Clean sensor 3. Calibrate sensor
163	Install.factor	M	On	Off	C (ind.)	
164	Sensor data	M	Off	Off	C	No temperature calibration data Factory calibration is used 1. Check process 2. Check sensor, replace if necessary
168	Polarization	S	On	Off	C (cond.)	Polarization warning The measured value is distorted at high conductivity levels. Use a sensor with a larger cell constant
169 - 170: Warning issued by hours of operation monitoring system. Measurement can still take place. 1. Replace sensor 2. Adjust monitoring limit 3. ÜDeactivate monitoring						
169	Operating time	M	On	Off	S	Operating hours, conc. > 200 mg/l
170	Operating time	M	On	Off	S	Operating hours, conc. < 50 mg/l
171	Lamp change	M	On	Off	N, T, S	Need to change lamp 1. Replace sensor 2. Contact the Service Department
172	Echo lost	F	On	On	U	Echo signal lost

No.	Message	Factory settings			Sensor type	Tests or remedial measures
		Cat.	Diag.	Error current		
173	Sludge level	F	On	On	U	Incorrect interface measurement Replace sensor
174	Turbid. failure	F	On	On	U	Incorrect turbidity measurement. Replace sensor
175	Wiper failure	F	On	On	U	Wiper not working. Clean or replace sensor.
176 - 199: Warning issued by hours of operation monitoring system. Measurement can still take place. 1. Replace sensor 2. Adjust monitoring limit 3. ÜDeactivate monitoring						
176	Operating time	M	On	Off	Cl	Operating hours > 100 nA
177	Operating time	M	On	Off	Cl	Operating hours > 20 nA
178	Operating time	M	On	Off	Cl	Operating hours > 15 °C
179	Operating time	M	On	Off	P	Operating hours > 300 mV
180	Operating time	M	On	Off	P	Operating hours < -300 mV
181	Operating time	M	On	Off	O (opt.)	Operating hours < 25 µS
182	Operating time	M	On	Off	O (opt.)	Operating hours > 40 µS
183	Operating time	M	On	Off	O (amp.)	Operating hours > 10 nA (COS51D)
184	Operating time	M	On	Off	O (amp.)	Operating hours > 30 nA (COS22D)
185	Operating time	M	On	Off	O (amp.)	Operating hours > 40 nA (COS51D)
186	Operating time	M	On	Off	O (amp.)	Operating hours > 160 nA (COS22D)
187	Operating time	M	On	Off	C	Operating hours > 80 °C, 100 nS/cm
188	Operating time	M	On	Off	C, O	Operating hours < 5 °C
189	Operating time	M	On	Off	O	Operating hours > 5 °C
190	Operating time	M	On	Off	O	Operating hours > 25 °C
191	Operating time	M	On	Off	O, I, Cl	Operating hours > 30 °C
192	Operating time	M	On	Off	O, I	Operating hours > 40 °C
193	Operating time	M	On	Off	P, C, O	Operating hours > 80 °C
194	Operating time	M	On	Off	P	Operating hours > 100 °C
195	Operating time	M	On	Off	C	Operating hours > 120 °C
196	Operating time	M	On	Off	C	Operating hours > 125 °C
197	Operating time	M	On	Off	C	Operating hours > 140 °C

No.	Message	Factory settings			Sensor type	Tests or remedial measures
		Cat.	Diag.	Error current		
198	Operating time	M	On	Off	C	Operating hours > 150 °C
199	Operating time	M	On	Off	All except U	Total operating hours
215	Simul. active	C	On	Off	All	Simulation active End simulation by changing to measuring mode
408	Calib. aborted	M	Off	Off	P, C, O, I, Cl	Calibration aborted
500	Sensor calib.	M	On	Off	All	Calibration aborted, main measured value fluctuates Reasons: sensor too old, sensor occasionally dry, calibration value not constant 1. Check sensor 2. Check calibration solution
501	Sensor calib.	M	On	Off	All except U	Calibration aborted, temperature measured value fluctuates Reasons: Sensor too old, sensor occasionally dry, temperature of calibration solution not constant 1. Check sensor 2. Regulate calibration solution temperature
505 - 522: Limit values of calibration monitoring system exceeded/undershot. Measuring can continue if a warning is issued. Possible reasons: sensor old or defective, reference blocked, calibration solution too old or contaminated 1. Check sensor, replace if necessary 2. Check calibration solution, replace if necessary 3. Repeat calibration						
505	Sensor calib.	M	On	Off	P, O, I, Cl	Max. zero point warning
507	Sensor calib.	M	On	Off	P, O, I, Cl	Min. zero point warning
509	Sensor calib.	M	On	Off	P, O, I, Cl	Min. slope warning
511	Sensor calib.	M	On	Off	P, O, I, Cl	Max. slope warning
513	Zero Warn	M	On	Off	O (amp.), Cl	Zero point warning
515	Sensor calib.	M	On	Off	P (ISFET)	Max. operating point warning
517	Sensor calib.	M	On	Off	P (ISFET)	Min. operating point warning
518	Sensor calib.	M	On	Off	P, O, I, Cl	Delta slope warning
520	Sensor calib.	M	On	Off	P, O, I, Cl	Delta zero point warning
522	Sensor calib.	M	On	Off	P (ISFET)	Delta operating point warning

No.	Message	Factory settings			Sensor type	Tests or remedial measures
		Cat.	Diag.	Error current		
523	Sensor calib.	M	On	On	C	Invalid cell constant, max./min. value or lower/upper warning value reached 1. Calibrate sensor 2. Replace sensor
524	Sensor calib.	M	On	On	C	
526	Sensor calib.	M	On	Off	C	
528	Sensor calib.	M	On	Off	C	
534	Sensor calib.	M	On	Off	Cl	Set limit for electrolyte consumption is reached Measurement can still take place. 1. Replace the electrolyte 2. Clear the electrolyte consumption counter
535	Sensor check	M	On	Off	O (amp.), Cl	Specified number of cap calibrations is reached Measurement can still take place. Replace sensor cap
550	Process temp.	S	On	On	C	Process temperature above/below concentration table – Process value outside specification – Incomplete table --> Extend table
551	Process temp.	S	On	On	C	
552	Process conduc.	S	On	On	C	Process conductivity above/below concentration table – Process value outside specification – Incomplete table --> Extend table
553	Process conduc.	S	On	On	C	
554	Process conc.	S	On	On	C	Process concentration above/below concentration table – Process value outside specification – Incomplete table --> Extend table
555	Process concent.	S	On	On	C	
556	Process temp.	S	On	On	C	Process temperature above/below compensation table – Process value outside specification – Incomplete table --> Extend table
557	Process temp.	S	On	On	C	
558	Process conduc.	S	On	On	C	Process compensation above/below compensation table – Process value outside specification – Incomplete table --> Extend table
559	Process conduc.	S	On	On	C	

No.	Message	Factory settings			Sensor type	Tests or remedial measures
		Cat.	Diag.	Error current		
560	Proc.cond.comp	S	On	On	C	Conductivity compensation above/below compensation table – Process value outside specification – Incomplete table --> Extend table
561	Proc.cond.comp	S	On	On	C	
720	Membrane change	M	On	Off	I	Replacement of the membrane cap necessary 1. Replace membrane cap 2. Reset the timer
722	Sensor reference	F	On	On	P	Alarm: Reference membrane impedance too low. 1. Check sensor, replace if necessary 2. Check and correct the reference limit value
723	Sensor reference	M	On	Off	I	Warning: Reference membrane impedance too low. Measurement can continue until the alarm. 1. Check sensor, replace if necessary 2. Check and correct the reference limit value
724	Sensor reference	F	On	On	I	Alarm: Reference membrane impedance too high. 1. Check sensor, replace if necessary 2. Check and correct the reference limit value
725	Sensor reference	M	On	Off	I	Alarm: Reference membrane impedance too high. Measurement can continue until the alarm. 1. Check sensor, replace if necessary 2. Check and correct the reference limit value
771	Lamp change	F	On	Off	N, T, S	Lamp change alarm ▪ Configured operating hours have been reached -> Replace the lamp -> Contact the Service Department
841	Operating range	S	Off	Off	All	Process value outside operational range 1. Check application 2. Check sensor
842	Process value	S	Off	Off	P	Process limit value exceeded/undershot Reasons: sensor in air, air pockets in assembly, incorrect flow to sensor, sensor defective 1. Change process value 2. Check measuring chain 3. Change sensor type
843	Process value	S	Off	Off	P	

No.	Message	Factory settings			Sensor type	Tests or remedial measures
		Cat.	Diag.	Error current		
844	Process value	S	Off	Off	N, T, S	Measured value outside specified range Reasons: sensor in air, air pockets in assembly, incorrect flow to sensor, sensor defective 1. Increase process value 2. Check measuring chain 3. Change sensor type
904	Process check	F	On	On	All	Stagnating measuring signal Reasons: sensor in air, sensor fouling, incorrect flow to sensor, sensor defective 1. Check measuring chain 2. Check sensor 3. Restart device
914	USP/ EP alarm	M	On	Off	C	USP limit values exceeded Check process
915	USP / EP warning	M	On	Off	C	
934	Process temp.	S	Off	Off	All except U	Process temperature high 1. Do not increase temperature 2. Check measuring chain 3. Change sensor type
935	Process temp.	S	Off	Off	All except U	Process temperature low 1. Do not reduce temperature 2. Check measuring chain 3. Change sensor type
942	Process value	S	Off	Off	All except U	Process value high 1. Do not increase process value 2. Check measuring chain 3. Change sensor type
943	Process value	S	Off	Off	All except U	Process value low 1. Do not decrease process value 2. Check measuring chain 3. Change sensor type
944	Sensor range	S	On	Off	S	Measurement at the margin of sensor's dynamic range. Reasons: Changes in the process to a higher or lower measuring range. 1. Check application 2. Use sensor suited to the measuring range of the application
983	Sensor ISE check	F	On	On	I	Electrode or membrane defective 1. Check electrode, replace if necessary 2. Check membrane cap, replace if necessary
984	Process temp.	S	On	On	I	Temperature outside specification 1. Check process temperature 2. Check measuring chain

No.	Message	Factory settings			Sensor type	Tests or remedial measures
		Cat.	Diag.	Error current		
985	Sensor Interface	F	On	On	I	Sensor interface error 1. Check plug 2. Check cable, replace if necessary
987	Calib. req.	M	On	On	I	Electrode change --> Calibration required

1.6.3 Configuration options for troubleshooting

The table **only** lists the diagnostics messages that depend on your settings in the menu. The path where you can change the settings is specified in the table.
The sensor type is also indicated in the path if the message **only** applies to one type of sensor. All other settings affect several sensor types.

No.	Path to software function
102	Menu/Setup/Inputs/Extended setup/Calib. settings/Calibration timer
103	Menu/Setup/Inputs/Extended setup/Calib. settings/Calibration timer/Calibration timer
104	Menu/Setup/Inputs/Extended setup/Calib. settings/Calib. expiration date/Alarm limit
105	Menu/Setup/Inputs/Extended setup/Calib. settings/Calib. expiration date/Warning limit
108	Menu/Setup/Inputs/Extended setup/Diagnostics settings/Sterilizations/Warning limit
109	Menu/Setup/Inputs/Oxygen (amp.)/Extended setup/Diagnostics settings/Number of cap sterilizations/Warning limit
122	Menu/Setup/Inputs/pH Glass/Extended setup/Diagnostics settings/Glass impedance (SCS)/Lower alarm limit
123	Menu/Setup/Inputs/pH Glass/Extended setup/Diagnostics settings/Glass impedance (SCS)/Lower warning limit
124	Menu/Setup/Inputs/pH Glass/Extended setup/Diagnostics settings/Glass impedance (SCS)/Upper alarm limit
125	Menu/Setup/Inputs/pH Glass/Extended setup/Diagnostics settings/Glass impedance (SCS)/Upper warning limit
126	Menu/Setup/Inputs/pH Glass/Extended setup/Diagnostics settings/Sensor Condition Check
127	Menu/Setup/Inputs/pH Glass/Extended setup/Diagnostics settings/Sensor Condition Check
145	Menu/Setup/Inputs/Extended setup/Diagnostics settings/Delta slope/Alarm limit
157	Menu/Setup/Inputs/Nitrate/Extended setup/Diagnostics settings/Limits operating hours/Filter change
168	Menu/Setup/Inputs/Cond c/Extended setup/Polarization detetected
169	Menu/Setup/Inputs/SAC/Extended setup/Diagnostics settings/Limits operating hours/Operation > 200 mg/l
170	Menu/Setup/Inputs/SAC/Extended setup/Diagnostics settings/Limits operating hours/Operation < 50 mg/l
176	Menu/Setup/Inputs/Chlorine/Extended setup/Diagnostics settings/Limits operating hours

No.	Path to software function
178	Menu/Setup/Inputs/Oxygen (amp.)/Extended setup/Diagnostics settings/Number of cap sterilizations/Alarm limit
179	Menu/Setup/Inputs/Extended setup/Diagnostics settings/Limits operating hours/Operation > 300 mV
180	Menu/Setup/Inputs/Extended setup/Diagnostics settings/Limits operating hours/Operation < -300 mV
181	Menu/Setup/Inputs/Extended setup/Oxygen (opt.)/Diagnostics settings/Limits operating hours/Operation < 25 µs
182	Menu/Setup/Inputs/Oxygen (opt.)/Extended setup/Diagnostics settings/Limits operating hours/Operation > 40 µs
183	Menu/Setup/Inputs/Oxygen (amp.)/Extended setup/Diagnostics settings/Limits operating hours/Operation > 15 nA
184	Operating time
185	Menu/Setup/Inputs/Oxygen (amp.)/Extended setup/Diagnostics settings/Limits operating hours/Operation > 50 nA
186	Operating time
187	Menu/Setup/Inputs/Cond c/Extended setup/Diagnostics settings/Limits operating hours/Operation > 80°C < 100nS/cm
188	Menu/Setup/Inputs/Extended setup/Diagnostics settings/Limits operating hours/Operation < 5°C
190	Menu/Setup/Inputs/Extended setup/Diagnostics settings/Limits operating hours/Operation > 25°C
192	Menu/Setup/Inputs/Extended setup/Diagnostics settings/Limits operating hours/Operation > 40°C
193	Menu/Setup/Inputs/Extended setup/Diagnostics settings/Limits operating hours/Operation > 80°C
194	Menu/Setup/Inputs/Extended setup/Diagnostics settings/Limits operating hours/Operation > 100°C
195	Menu/Setup/Inputs/Extended setup/Diagnostics settings/Limits operating hours/Operation > 120°C
196	Menu/Setup/Inputs/Extended setup/Diagnostics settings/Limits operating hours/Operation > 125°C
197	Menu/Setup/Inputs/Extended setup/Diagnostics settings/Limits operating hours/Operation > 140°C
198	Menu/Setup/Inputs/Extended setup/Diagnostics settings/Limits operating hours/Operation > 150°C
199	Menu/Setup/Inputs/Extended setup/Diagnostics settings/Limits operating hours/Operating time
505	Menu/Setup/Inputs/Extended setup/Diagnostics settings/Zero point/Upper warning limit
507	Menu/Setup/Inputs/Extended setup/Diagnostics settings/Zero point/Lower warning limit
509	Menu/Setup/Inputs/Oxygen (amp.)/Extended setup/Diagnostics settings/Slope/Lower warning limit
511	Menu/Setup/Inputs/Oxygen (amp.)/Extended setup/Diagnostics settings/Slope/Upper warning limit
513	Menu/Setup/Inputs/Oxygen (amp.)/Extended setup/Diagnostics settings/Zero point/Warning limit
515	Menu/Setup/Inputs/pH ISFET/Extended setup/Diagnostics settings/Operating point/Upper warning limit
517	Menu/Setup/Inputs/pH ISFET/Extended setup/Diagnostics settings/Operating point/Lower warning limit
518	Menu/Setup/Inputs/Extended setup/Diagnostics settings/Delta slope/Warning limit

No.	Path to software function
520	Menu/Setup/Inputs/Extended setup/Diagnostics settings/Delta zero point/Warning limit
522	Menu/Setup/Inputs/pH ISFET/Extended setup/Diagnostics settings/Delta operating point/Warning limit
842	Menu/Setup/Inputs/Redox/Extended setup/Diagnostics settings/Redox-Meas value/Upper alarm limit
843	Menu/Setup/Inputs/Redox/Extended setup/Diagnostics settings/Redox-Meas value/Lower alarm limit
904	Menu/Setup/Inputs/Extended setup/Diagnostics settings/Process Check System
934	Menu/Setup/Inputs/Extended setup/Diagnostics settings/Limits operating hours
935	Menu/Setup/Inputs/Extended setup/Diagnostics settings/Limits operating hours
942	Menu/Setup/Inputs/Redox/Extended setup/Diagnostics settings/Redox-Meas value/Upper warning limit
943	Menu/Setup/Inputs/Redox/Extended setup/Diagnostics settings/Redox-Meas value/Lower warning limit

1.7 Pending diagnostic messages

The Diagnostics menu contains all the information on the device status.
Furthermore, various service functions are available.

The following messages are directly displayed every time you enter the menu:
- "Most important message"
  Diagnostics message recorded with the highest criticality level
- "Past message"
  Diagnostic message whose cause is no longer present.

All the other functions in the Diagnostics menu are described in the following chapters.

1.8 Diagnostics list

All the current diagnostics messages are listed here.
A time stamp is available for each message. Furthermore, the system also displays the configuration and description of the message as saved in "Menu/Setup/General settings/Diagnostics/Device behavior".

1.9 Event logbook

1.9.1 Available logbooks

Types of logbooks
- Logbooks physically available (all apart from the overall logbook)
- Database view of all logbooks (=overall logbook)

Logbook	Visible in	Max. entries	Can be disabled [1]	Logbook can be deleted	Entries can be deleted	Can be exported
Overall logbook	All events	1000	Yes	No	Yes	No
Diagnostics logbook	Diagnostic events	250	(Yes)	No	Yes	Yes
Calibration logbook	Calibration events	75	(Yes)	No	Yes	Yes
Operation logbook	Configuration events	250	(Yes)	No	Yes	Yes
Version logbook	All events	50	No	No	No	Yes
Hardware version logbook	All events	125	No	No	No	Yes
Data logbook	Data logbooks	150,000	Yes	Yes	Yes	Yes
Debugging logbook	Only accessible with the special activation code (Service)	1000	Yes	No	Yes	Yes

1) Data in brackets means this depends on the overall logbook

1.9.2 Logbooks menu

Diagnostics/Logbooks

Function	Options	Info
▶ All events		Chronological list of all the logbook entries, with information on the type of event.
▶ Show	Events are displayed	Select a particular event to display more detailed information.
▶ Go to date	User input ▪ Go to date ▪ Time	Use this function to go directly to a specific time in the list. In this way, you avoid having to scroll through all the information. The complete list is always visible, however.
▶ Calibration events		Chronological list of the calibration events.
▶ Show	Events are displayed	Select a particular event to display more detailed information.

Diagnostics/Logbooks

Function	Options	Info
▶ Go to date	User input ▪ Go to date ▪ Time	Use this function to go directly to a specific time in the list. In this way, you avoid having to scroll through all the information. The complete list is always visible, however.
▷ Delete all entries	Action	You can delete all the calibration logbook entries here.
▶ Configuration events		Chronological list of the configuration events.
▶ Show	Events are displayed	Select a particular event to display more detailed information.
▶ Go to date	User input ▪ Go to date ▪ Time	Use this function to go directly to a specific time in the list. In this way, you avoid having to scroll through all the information. The complete list is always visible, however.
▷ Delete all entries	Action	You can use this to delete all the operation logbook entries.
▶ Diagnostic events		Chronological list of the diagnostics events.
▶ Show	Events are displayed	Select a particular event to display more detailed information.
▶ Go to date	User input ▪ Go to date ▪ Time	Use this function to go directly to a specific time in the list. In this way, you avoid having to scroll through all the information. The complete list is always visible, however.
▷ Delete all entries	Action	You can use this to delete all the diagnostics logbook entries.

You can view your data logbook entries graphically on the display ("Show plot").
You can also adapt the display to suit your individual requirements:
- If you press the navigator button in the graphic display, you are given additional options such as the zoom function and x/y movement of the graph.
- Furthermore, you can also define a cursor. If you select this option, you can move along the graph with the navigator and view the logbook entry (data stamp/measured value) in text form for every point in the graph.
- Simultaneous display of two logbooks ("Select 2nd plot" and "Show plot"), → 1:
  - A small cross marks the currently selected graph for which the zoom can be changed or a cursor used, for example.
  - In the context menu (press the navigator button), you can select the other graph. You can then apply the zoom function, a movement or a cursor to this graph.
  - Using the context menu, you can also select both graphs simultaneously. This enables you, for example, to use the zoom function on both graphs simultaneously.

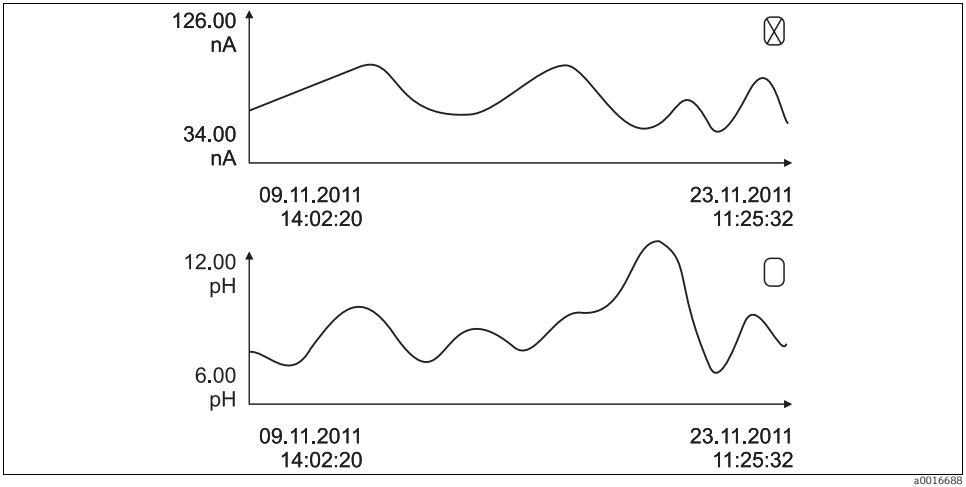

Fig. 1: Simultaneous display of two graphs, the upper one is "selected"

Diagnostics/Logbooks

Function	Options	Info
▶ Data logbooks		Chronological list of the data logbook entries.
Data logbook 1 <Logbook name>		This submenu is available for each data logbook that you have set up and activated.
Source of data	Read only	Input or mathematical function is displayed.
Measured value	Read only	Measured value being recorded is displayed.
Log time left	Read only	Display of days, hours and minutes until logbook is full. Please note the instructions regarding the selection of the storage type in the General settings/Logbooks menu (--> BA "Operation and settings").
▶ Show	Events are displayed	Select a particular event to display more detailed information.
▶ Show plot	Graphic display of the logbook entries	The entries are displayed according to your settings in the General settings/Logbooks menu.
Select 2nd plot	Selecting another data logbook	You can view a second logbook at the same time as the current one.
▶ Go to date	User input ▪ Go to date ▪ Time	Use this function to go directly to a specific time in the list. In this way, you avoid having to scroll through all the information. The complete list is always visible, however.
▷ Delete all entries	Action	You can use this to delete all data logbook entries.

Diagnostics/Logbooks

Function	Options	Info
▶ Save logbooks		
File format	Options ▪ CSV ▪ FDM	Save the logbook in the preferred file format. You can then open the CSV file you saved on the PC in MS Excel, for example, and process it further [1]. You can import the FDM files into Fieldcare and archive them so they are tamper-proof.
▷ All data logbooks ▷ Data logbook 1 to n ▷ All event logbooks ▷ Calibration logbook ▷ Diagnostic logbook ▷ Configuration logbook ▷ HW version logbook ▷ Version logbook	The action commences as soon as the option is selected	Use this function to save the logbook to an SD card. ▶ Insert the SD card into the device card reader and select the logbook to be saved.
The file name is made up of the "Logbook ident" (Menu/Setup/General settings/Logbooks), an abbreviation for the particular logbook and a time stamp.		

1) CSV files use international number formats and separators. Therefore they must be imported into MS Excel as external data with the correct format settings. If you double-click the file to open it, the data are only displayed correctly if MS Excel is installed with the US country setting.

1.10 Simulation

You can simulate values at inputs and outputs for testing purposes:
- Current values at current outputs
- Measured values at inputs
- Relay contact opening or closing

Diagnostics/Simulation

Function	Options	Info
▶ Current outputx:y		Simulation of an output current This menu appears once for each current output.
Simulation	Options ▪ On ▪ Off **Factory setting** Off	If you simulate the value at the current output, this is indicated on the display by a simulation icon in front of the current value.
Current	2.4 to 23.0 mA **Factory setting** 4 mA	Set the desired simulation value.

Diagnostics/Simulation

Function	Options	Info
▶ Alarm relay ▶ Relay x:y		Simulation of a relay state This menu appears once for each relay.
Simulation	Options ▪ On ▪ Off **Factory setting** Off	If you simulate the relay state, this is indicated on the display by a simulation icon in front of the relay display.
State	Options ▪ Low ▪ High **Factory setting** Low	Set the desired state. The relay switches in accordance with your setting when you switch on the simulation. The display shows "On" (="Low") or "Off" (="High") for the simulated relay state.
▶ Meas. inputs		Simulation of a measured value This menu appears once for each measuring input.
▶ Channel : parameter		
Sim. main value	Options ▪ On ▪ Off **Factory setting** Off	If you simulate the measured value, this is indicated on the display by a simulation icon in front of the measured value.
Main value	Depends on the sensor **Factory setting** Depends on the sensor	Set the desired simulation value.
Sim. temperature	Options ▪ On ▪ Off **Factory setting** Off	If you simulate the temperature measured value, this is indicated on the display by a simulation icon in front of the temperature.
Temperature	-50.0 to +250.0 °C (-58.0 to 482.0 °F) **Factory setting** 20.0 °C (68.0 °F)	Set the desired simulation value.

1.11 Reset measuring instrument

Diagnostics/Systemtest/Reset

Function	Options	Info
▷ Device reset	Options ▪ OK ▪ ESC	Restart and keep all the settings
▷ Factory default	Options ▪ OK ▪ ESC	Restart with factory settings Settings that have not been saved are lost.
▶ Power supply	Read only ▪ Digital Supply 1: 1.2V ▪ Digital Supply 2: 3.3V ▪ Analog Supply: 12.5V ▪ Sensor Supply: 24V ▪ Temperature	Detailed list of power supply to instrument. The actual values can vary without a malfunction being present.

1.12 Device information

1.12.1 System information

Diagnostics/System information

Function	Options	Info
Device tag	Read only	Individual device tag, --> "General settings"
Order code	Read only	You can order identical hardware with this code. This code changes on account of changes to the hardware and you can enter the new code you received from the manufacturer here[1)].
To find out what device version you have, enterthe order code in the search screen at the following address: www.products.endress.com/order-ident		
Orig. order code ext.	Read only	Complete order code for the original device, resulting from the product structure.
Current order code ext.	Free text	Current code, taking into account changes to the hardware. You must enter this yourself.
Serial number	Read only	The serial number allows you to access device data and documentation on the Internet: www.products.endress.com/device-viewer
Software version	Read only	Current version

Diagnostics/System information

Function	Options	Info
▶ HART *only with HART option*	Read only ▪ Bus address ▪ Unique address ▪ Manufacturer ID ▪ Device type ▪ Device revision ▪ Software revision	HART-specific information The unique address is linked to the serial number and is used to reach devices in a multi-drop environment. Device and software version numbers are incremented as soon as changes have been made.
▶ Modbus *only with Modbus TCPor Modbus RS485 option*	Read only ▪ Enable ▪ Bus address ▪ Termination ▪ Modbus TCP Port 502	Modbus-specific information
▶ PROFIBUS DP *only with PROFIBUS DP option*	Read only ▪ DPV0 state	Module status
▶ Ethernet *only with Ethernet, Modbus TCP, Modbus RS485 or PROFIBUS DP option*	Read only ▪ Enable ▪ Webserver ▪ IP-Address ▪ Netmask ▪ Gateway ▪ MAC-Address ▪ Modbus TCP Port 502 ▪ Webserver TCP Port 80	Ethernet-specific information --> BA00450C "Operation & settings"
▶ SD card	Read only ▪ Total ▪ Free memory	Total memory and space available
▶ System modules		
Depends on the electronics module available, e.g.: Base	Read only ▪ Description ▪ Serial number ▪ Order code ▪ Hardware version ▪ Software version	This information is provided for every electronics module available. Specify the serial numbers and order codes when servicing, for example.
▶ Sensors		
Depends on the sensors connected	Read only ▪ Description ▪ Serial number ▪ Order code ▪ Hardware version ▪ Software version	This information is provided for every sensor available. Specify the serial numbers and order codes when servicing, for example.
▶ Save system information		
▷ Save to SD card	File name assigned automatically (includes a time stamp)	The information is saved on the SD card in a "sysinfo" subfolder. The csv file can be read and edited in MS Excel for example.

1) Provided you give the manufacturer all the information about changes to the hardware.

1.12.2 Sensor information

Select the channel you want from the list of channels.

Information in the following categories is displayed:
- Extreme values
  Conditions to which the sensor was previously exposed, e.g. min./max. temperatures[1)]
- Operating time
  Operating time of the sensor under defined extreme conditions
- Calibration information
  Calibration data of the last calibration
- Sensor specifications
  Measuring range limits for main measured value and temperature
- General information
  Sensor identification information

The specific data that are displayed depends on what sensor is connected.

1.13 Firmware history

Date	Version	Changes to software	Documentation: edition
04/2013	01.04.00	Extension ▪ Conductivity: – Measuring range switch – Temperature compensation ISO 7888 at 20 °C ▪ Support for DIO module – Triggering of an external hold – Triggering a cleaning – PID regulator enable/disable – PFM can be used as analog input – Limit contactor signals via digital output ▪ Keylock with password protection ▪ PID regulator: disturbance variable feedforward is supported ▪ pH: – Icon for manual and automatic temperature compensation (ATC/MTC+MED) – Monitoring for the upper and lower limits of the glass SCS value can be switched on or off independently of each other ▪ ISE – Simultaneous calibration of two parameters – User-defined electrode type – Raw measured value for current output selectable – Timer for membrane replacement ▪ Logbooks remain intact after a firmware update Improvement ▪ PROFIBUS address range for Siemens S7 moved to the lower area. ▪ Offset icon still only present for pH or Redox ▪ Turbidity: Autoranging can be switched off ▪ Export print (xml): device also provides a stylesheet.	BA00444C/07/EN/16.13 BA00445C/07/EN/16.13 BA00450C/07/EN/16.13 BA00451C/07/EN/15.13 BA00486C/07/EN/01.11

1) Not available for all sensor types.

Date	Version	Changes to software	Documentation: edition
06/2012	01.03.01	Improvement ▪ Hold via softkey ▪ Global or channel-specific hold stops automatic cleaning. Manual cleaning can be started, however. ▪ Adapted factory settings	BA00444C/07/EN/15.12 BA00445C/07/EN/15.12 BA00450C/07/EN/15.12 BA00451C/07/EN/14.11 BA00486C/07/EN/01.11
12/2011	01.03.00	Extension ▪ Max. 8 sensor channels supported ▪ Current inputs ▪ PROFIBUS DP incl. profile 3.02 supported ▪ Modbus RTU (RS485) supported ▪ Modbus TCP supported ▪ Integrated web server supported via TCPIP (RJ45) ▪ USP/EP (United States Pharmacopeia and European Pharmacopeia) and TDS (Total Dissolved Solids) for conductivity ▪ Icon for "controller active" in measuring screen Improvement ▪ Controller hold via analog input ▪ Adapted factory settings ▪ SAC: Factory calibration in the field incl. filter operating time reset and lamp change ▪ ISFET leakage visible in measuring screen ▪ Multiselect for limit switch and cleaning cycles	BA00444C/07/EN/14.11 BA00445C/07/EN/14.11 BA00450C/07/EN/14.11 BA00451C/07/EN/14.11 BA00486C/07/EN/01.11
12/2010	01.02.00	Extension ▪ Support for additional sensors: – Chlorine – ISE – SAC – Interface ▪ HART communication ▪ Mathematics functions Improvement ▪ Modified software structures ▪ Adapted factory settings ▪ User-defined measuring screens	BA444C/07/EN/13.10 BA445C/07/EN/13.10 BA450C/07/EN/13.10 BA451C/07/EN/13.10 BA00486C/07/EN/01.11
03/2010	01.00.00	Original software	BA444C/07/EN/03.10 BA445C/07/EN/03.10 BA450C/07/EN/03.10 BA451C/07/EN/03.10

2 Maintenance

⚠ WARNING

Process pressure and temperature, contamination, electrical voltage

Risk of serious or fatal injury

- ▶ If the sensor has to be removed during maintenance work, avoid hazards posed by pressure, temperature and contamination.
- ▶ De-energize the device before opening it.
- ▶ Power can be supplied to switching contacts from separate circuits. De-energize these circuits before working on the terminals.

Take all the necessary precautions in time to ensure the operational safety and reliability of the entire measuring point.
Maintenance of the measuring point comprises:

- Calibration
- Cleaning the controller, assembly and sensor
- Checking cables and connections

When performing any work on the device, bear in mind any potential impact this may have on the process control system or on the process itself.

NOTICE

Electrostatic discharge (ESD)

Risk of damage to electronic components

- ▶ Take personal protective measures to avoid ESD, such as discharging beforehand at PE or permanent grounding with a wrist strap.
- ▶ For your own safety, use only genuine spare parts. With genuine parts, the function, accuracy and reliability are also ensured after maintenance work.

2.1 Calibration

Sensors with Memosens protocol are calibrated at the factory.
Users must decide whether the process conditions present require calibration during initial commissioning.
Additional calibration is not required in many standard applications.
Calibrate the sensors at sensible intervals depending on the process.

All information on calibration is provided in BA00451C "Calibration".

2.2 Cleaning

2.2.1 Controller

Only clean the front of the housing with commercially available cleaning agents.

The front is resistant to the following as per DIN 42 115:

- Ethanol (short periods)
- Diluted acids (max. 2% HCl)

- Diluted bases (max. 3% NaOH)
- Soap-based household cleaners

NOTICE

Prohibited cleaning agents

Damage to the housing surface or housing seal

- ▶ For cleaning purposes, never use concentrated mineral acids or bases.
- ▶ Never use organic cleaners such as benzyl alcohol, methanol, methylene chloride, xylene or concentrated glycerol cleaner.
- ▶ Never use high-pressure steam for cleaning purposes.

2.2.2 Digital sensors

⚠ CAUTION

The cleaning system is not switched off during calibration or maintenance activities

Risk of injury due to medium or cleaning agent

- ▶ If a cleaning system is connected, switch it off before removing a sensor from the medium.
- ▶ If you are not switching off the cleaning system because you wish to test the cleaning function, wear protective clothing, goggles and gloves or take other appropriate measures.

1. If an error occurs or the maintenance schedule stipulates that the sensor has to be replaced, use a new sensor or a sensor that has been precalibrated in the laboratory. A sensor is calibrated in the laboratory under optimum external conditions, thereby ensuring better quality of measurement.
2. Remove the sensor to be serviced and install the new sensor.
3. You must perform calibration if you use a sensor that is not precalibrated.
4. The sensor data are automatically accepted by the transmitter. A release code is not required.
5. Measurement is resumed.
6. Take the used sensor back to the laboratory. In the laboratory you can get the sensor ready for reuse while ensuring the availability of the measuring point.
   - Clean the sensor. For this purpose, use the cleaning agent specified in the sensor manual.
   - Inspect the sensor for cracks or other damage.
   - If no damage is found, regenerate the sensor. Where necessary, store the sensor in a regeneration solution (--> sensor manual).
   - Recalibrate the sensor for reuse.

2.2.3 Assemblies

Refer to the assembly operating manual for information on servicing and troubleshooting the assembly. The assembly operating manual describes the procedure for mounting and disassembling the assembly, replacing the sensors and seals, and contains information on the material resistance properties, as well as spare parts and accessories.

3 Repair

3.1 Spare parts

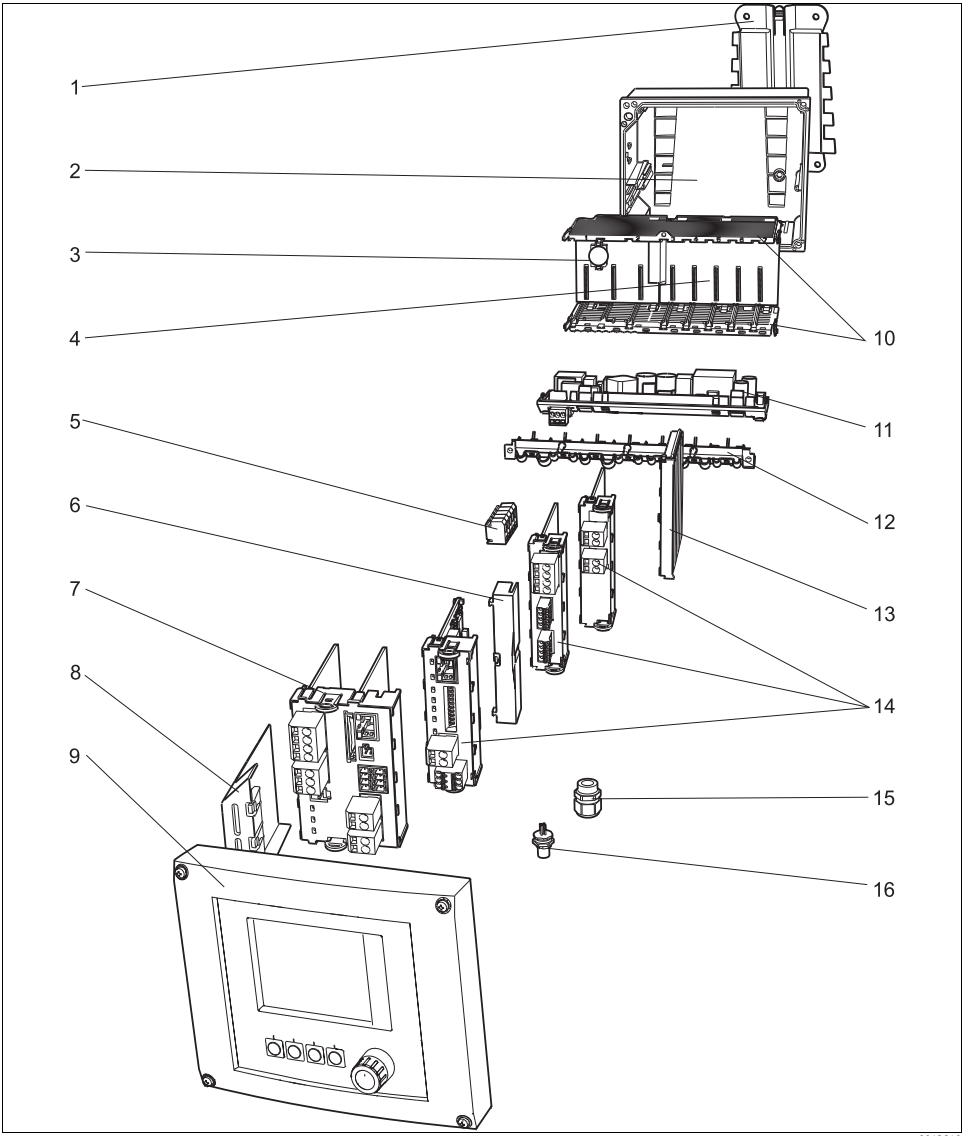

Abb. 2: Spare parts: You can find the names of spare parts and their order numbers in the following table.

Item	Kit CM44x	Order number
1	Kit CM44x: mounting plate ▪ Mounting plate ▪ Instructions for spare parts kit CM44x	71101763
2	Kit CM44x: housing base of field housing ▪ Housing base of field housing ▪ Cable mounting rail with double clamps and screws (item 12) ▪ Instructions for spare parts kit CM44x	71101734
3	Kit CM44x: electronics module backplane ▪ Backplane complete ▪ **To be replaced only by Endress+Hauser Service**	71101457
4	Kit CM44x: electronics module extension backplane ▪ Extension backplane complete ▪ **To be replaced only by Endress+Hauser Service**	71141366
5	Kit CM44x: power distribution terminals N+L ▪ Power distribution terminals ▪ Instructions for spare parts kit CM44x	71101461
6, 13	Kit CM44x: end covers and blanking covers ▪ 5 pcs. each	71107455
7	Kit CM442: basic module BASE-L 24V AC/DC ▪ Basic module 24V AC/DC complete ▪ End cover (item 8) ▪ Instructions for spare parts kit CM44x	71100607
	Kit CM442: basic module BASE-H 230V AC ▪ Basic module 230V AC, complete ▪ End cover (item 8) ▪ Instructions for spare parts kit CM44x	71100611
	Kit CM444/CM448: basic module BASE-E ▪ Basic module, complete ▪ End cover (item 8) ▪ Connecting cable for connecting to a EPS-H or EPS-L power unit ▪ Instructions for spare parts kit CM44x	71141336
	Kit CM44x: terminal set, basic module	71107452
9	Kit CM44x: cover KS field housing cpl. with display ▪ Cover KS field housing cpl. with display ▪ Display cable ▪ Instructions for spare parts kit CM44x	71104106
10, 12	Kit CM44x: internal housing parts, mechanical ▪ Insert side panels (item 10) ▪ Cable mounting rail with double clamps and screws (item 12) ▪ Instructions for spare parts kit CM44x	71101765
11	Kit CM444/CM448: expansion power unit ▪ EPS-H or EPS-L expansion power unit ▪ Instructions for spare parts kit CM44x	On request
No graphic	Kit CM44x: connecting cable, power unit ▪ To connect to basic module BASE-E ▪ Instructions for spare parts kit CM44x	71155580

Item	Kit CM44x	Order number
14	Kit CM44x: extension module AOR (2 relays + 2 current outputs) ▪ Extension module AOR, complete ▪ Instructions for spare parts kit CM44x	71111053
	Kit CM44x: terminal set, extension module AOR	71107453
	Kit CM44x: extension module 2R (2 relays) ▪ Extension module 2R complete ▪ Instructions for spare parts kit CM44x	71125375
	Kit CM44x: extension module 4R (4 relays) ▪ Extension module 4R complete ▪ Instructions for spare parts kit CM44x	71125376
	Kit CM44x: terminal set, extension module 2R, 4R	71155581
	Kit CM44x: extension module 2AO (2 x 0/4 to 20 mA) ▪ Extension module 2AO complete ▪ Instructions for spare parts kit CM44x	71135632
	Kit CM44x: extension module 4AO (4 x 0/4 to 20 mA) ▪ Extension module 4AO complete ▪ Instructions for spare parts kit CM44x	71135633
	Kit CM44x: terminal set, extension module 2AO, 4AO	71155582
	Kit CM44x: extension module 2DS (2 x digital sensor) ▪ Extension module 2DS complete ▪ Instructions for spare parts kit CM44x	71135631
	Kit CM44x: extension module 2AI (2 x analog input 0/4 to 20 mA) ▪ Extension module 2AI complete ▪ Instructions for spare parts kit CM44x	71135639
	Kit CM44x: extension module 485 (Ethernet configuration) ▪ Extension module 485 complete ▪ With activation code extendable to PROFIBUS DP or Modbus RS 485 or Modbus TCP ▪ Instructions for spare parts kit CM44x	71135634
	Kit CM44x: terminal set, extension module 2AI, 485	71155583
15	Kit CM44x: set of 6 glands, metric ▪ Accessories kit, M cable glands ▪ Instructions for spare parts kit CM44x	71101768
	Kit CM44x: set of 6 glands, NPT ▪ Accessories kit, NPT cable glands ▪ Instructions for spare parts kit CM44x	71101770
	Kit CM44x: set of 6 glands, G ▪ Accessories kit, G cable glands ▪ Instructions for spare parts kit CM44x	71101771
16	M12 socket ▪ 6-pin, complete with cables	71107456
No graphic	Kit CM44x: field housing display cable ▪ Display cable ▪ Instructions for spare parts kit CM44x	71101762

Item	Kit CM44x	Order number
No graphic	Kit CM44x: dummy plug for cable bushing ▪ 6 pcs	71104942
No graphic	Kit CM44x: set of hinges ▪ 10 pcs	71107454
No graphic	CDI plug-in connector with counter nut M20x1.5	51517507

3.2 Return

The product has to be returned in the event of repair, factory calibration, incorrect delivery or incorrect ordering. As an ISO-certified company and due to legal regulations, Endress+Hauser is obligated to use particular handling techniques for all returned products that have come into contact with a medium.

In order to ensure a reliable, proper and quick return:
Learn about the methods and basic conditions at the Internet site
www.services.endress.com/return-material

3.3 Disposal

The device contains electronic components and must therefore be disposed of in accordance with regulations on the disposal of electronic waste.
Please observe local regulations.

4 Accessories

The most important accessories available at the time this document went to print are listed below.
Contact your service representative or Sales Center for accessories that are not listed here.

4.1 Weather protection cover

CYY101 weather protection cover for field devices - absolutely essential if operating the unit outdoors
- Material: stainless steel 1.4301 (AISI 304)
- Order No. CYY101-A

4.2 Post mounting kit

CM44x post mounting kit
- For securing the field housing to horizontal and vertical posts and pipes
- Order No. 71096920

4.3 Measuring cable

Memosens data cable CYK10
- For digital sensors with Memosens technology
  pH, redox, oxygen (amperometric), chlorine, conductivity (conductive)
- Order as per product structure (--> Online Configurator, www.products.endress.com/cyk10)

Memosens data cable CYK11
- Extension cable for digital sensors with Memosens protocol
- Order as per product structure (--> Online Configurator, www.products.endress.com/cyk11)

Measuring cable CYK81
- Unterminated cable for extending sensor cables (e.g. Memosens)
- 2 x 2 cores, twisted with shielding and PVC sheath (2 x 2 x 0.5 mm^2 + shielding)
- Material sold by the meter, Order No.: 51502543

4.4 Sensors

4.4.1 Glass electrodes

Orbisint CPS11D
- pH sensor with Memosens technology
- Dirt-resistant PTFE diaphragm
- Order as per product structure (--> Online Configurator, www.products.endress.com/cps11d)
- Technical Information TI028C/07/EN

Ceraliquid CPS41D
- pH sensor with Memosens technology
- Ceramic diaphragm and KCl liquid electrolyte
- Order as per product structure (--> Online Configurator, www.products.endress.com/cps41d)
- Technical Information TI079C/07/EN

Ceragel CPS71D
- pH sensor with Memosens technology
- Twin-chamber reference system and integrated bridge electrolyte
- Order as per product structure (--> Online Configurator, www.products.endress.com/cps71d)
- Technical Information TI245C/07/EN

Orbipore CPS91D
- pH sensor with Memosens technology
- Open aperture junction for media with high potential for fouling
- Order as per product structure (--> Online Configurator, www.products.endress.com/cps91d)
- Technical Information TI375C/07/EN

Orbipac CPF81D
- pH compact sensor for installation or immersion operation in industrial water and wastewater
- Order as per product structure (--> Online Configurator, www.products.endress.com/cpf81d)
- Technical Information TI191C/07/EN

4.4.2 Pfaudler electrodes

Ceramax CPS341D
- pH electrode with pH-sensitive enamel
- For the toughest requirements in terms of precision, pressure, temperature, sterility and operating life
- Order as per product structure (--> Online Configurator, www.products.endress.com/cps341d)
- Technical Information TI468C/07/EN

4.4.3 ORP sensors

Orbisint CPS12D
- ORP sensor with Memosens technology
- Dirt-resistant PTFE diaphragm;
- Order as per product structure (--> Online Configurator, www.products.endress.com/cps12d)
- Technical Information TI367C/07/EN

Ceraliquid CPS42D
- ORP sensor with Memosens technology
- Ceramic diaphragm and KCl liquid electrolyte
- Order as per product structure (--> Online Configurator, www.products.endress.com/cps42d)
- Technical Information TI373C/07/EN

Ceragel CPS72D
- ORP sensor with Memosens technology
- Twin-chamber reference system and integrated bridge electrolyte
- Order as per product structure (--> Online Configurator, www.products.endress.com/cps72d)
- Technical Information TI374C/07/EN

Orbipac CPF82D
- Redox compact sensor for installation or immersion operation in industrial water and wastewater
- Order as per product structure (--> Online Configurator, www.products.endress.com/cpf82d)
- Technical Information TI191C/07/EN

Orbipore CPS92D
- ORP sensor with Memosens technology
- Open aperture junction for media with high potential for fouling
- Order as per product structure (--> Online Configurator, www.products.endress.com/cps92d)
- Technical Information TI435C/07/EN

4.4.4 pH-ISFET sensors

Tophit CPS471D
- Sterilizable and autoclavable ISFET sensor with Memosens technology
- For food and pharmaceutical industry, process engineering, water treatment and biotechnology
- Order as per product structure (--> Online Configurator, www.products.endress.com/cps471d)
- Technical Information TI283C/07/EN

Tophit CPS441D
- Sterilizable ISFET sensor with Memosens technology
- For low-conductivity media, with liquid KCl electrolyte
- Order as per product structure (--> Online Configurator, www.products.endress.com/cps441d)
- Technical Information TI352C/07/EN

Tophit CPS491D
- ISFET sensor with Memosens technology
- Open aperture diaphragm for media with high potential for fouling
- Order as per product structure (--> Online Configurator, www.products.endress.com/cps491d)
- Technical Information TI377C/07/EN

4.4.5 Inductive conductivity sensors

Indumax CLS50D
- Inductive conductivity sensor with very good resistance properties for standard, Ex and high-temperature applications
- Memosens protocol
- Order as per product structure (--> Online Configurator, www.products.endress.com/cls50d)
- Technical Information TI182C/07/EN

4.4.6 Conductive conductivity sensors

Condumax CLS15D
- Conductive conductivity sensor for pure water, ultrapure water and Ex applications
- Order as per product structure (--> Online Configurator, www.products.endress.com/cls15d)
- Technical Information TI109C/07/EN

Condumax CLS16D
- Hygienic, conductive conductivity sensor for pure water, ultrapure water and EX applications
- With EHEDG and 3A approval
- Order as per product structure (--> Online Configurator, www.products.endress.com/cls16d)
- Technical Information TI227C/07/EN

Condumax CLS21D
- Two-electrode sensor in plug-in head and fixed cable version
- Order as per product structure (--> Online Configurator, www.products.endress.com/cls21d)
- Technical Information TI085C/07/EN

4.4.7 Oxygen sensors

Oxymax COS51D
- Amperometric sensor for dissolved oxygen, with Memosens technology
- Order as per product structure (--> Online Configurator, www.products.endress.com/cos51d)
- Technical Information TI413C/07/EN

Oxymax COS61D
- Optical oxygen sensor for drinking water and industrial water measurement
- Measuring principle: quenching
- Memosens protocol
- Material: stainless steel 1.4571 (AISI 316Ti)
- Order as per product structure (--> Online Configurator, www.products.endress.com/cos61d)
- Technical Information TI387C/07/EN

Oxymax COS22D
- Sterilizable sensor for dissolved oxygen
- Order as per product structure (--> Online Configurator, www.products.endress.com/cos22d)
- Technical Information TI446C/07/EN

4.4.8 Chlorine sensors

CCS142D
- Membrane-covered amperometric sensor for free chlorine
- Memosens technology
- Measuring range 0.01 to 20 mg/l
- Order as per product structure (--> Online Configurator, www.products.endress.com/ccs142d)
- Technical Information TI419C/07/EN

4.4.9 Ion-selective sensors

ISEmax CAS40D
- Ion-selective sensors
- Order as per product structure (--> Online Configurator, www.products.endress.com/cas40d)
- Technical Information TI491C/07/EN

4.4.10 Turbidity sensors

Turbimax CUS51D
- For nephelometric turbidity and solids measurement in wastewater
- 4-beam alternating light method based on scattered light
- With Memosens protocol
- Order as per product structure (--> Online Configurator, www.products.endress.com/cus51d)
- Technical Information TI461C/07/EN

4.4.11 SAC and nitrate sensors

Viomax CAS51D
- SAC and nitrate measurement in drinking water and wastewater
- With Memosens protocol
- Order as per product structure (--> Online Configurator, www.products.endress.com/cas51d)
- Technical Information TI459C/07/EN

4.4.12 Interface measurement

Turbimax CUS71D
- Immersion sensor for interface measurement
- Ultrasonic interface sensor
- Order as per product structure (--> Online Configurator, www.products.endress.com/cus71d)
- Technical Information TI490C/07/EN

4.5 Additional functionality

4.5.1 Hardware extension modules

Kit CM442/CM444/CM448/CSF48: Extension module AOR
- 2 x relay, 2 x analog output 0/4 to 20 mA
- Order No. 71111053

Kit CM442/CM444/CM448/CSF48: Extension module 2R
- 2 x relay
- Order No. 71125375

Kit CM442/CM444/CM448/CSF48: Extension module 4R
- 4 x relay
- Order No. 71125376

Kit CM442/CM444/CM448/CSF48: Extension module 2AO
- 2 x analog output 0/4 to 20 mA
- Order No. 71135632

Kit CM444/CM448/CSF48: Extension module 4AO
- 4 x analog output 0/4 to 20 mA
- Order No. 71135633

Kit CM444/CM448/CSF48: Extension module 2DS
- 2 x digital sensor, Memosens
- Order No. 71135631

Kit CM442/CM444/CM448/CSF48: Extension module 2AI
- 2 x analog input 0/4 to 20 mA
- Order No. 71135639

Kit CM442/CM444/CM448/CSF48: Extension module DIO
- 2 x digital input
- 2 x digital output
- Auxiliary voltage supply for digital output
- Order no. 71135638

Kit CM442/CM444/CM448/CSF48: Extension module 485
- Ethernet configuration
- Can be extended to PROFIBUS DP or Modbus RS485 or Modbus TCP. This requires an additional activation code which can be ordered separately (→ 56).
- Order No. 71135634

Upgrade kit CM442/CM444/CM448/CSF48
- Extension module 485
- PROFIBUS DP (+ Ethernet configuration)
- Order No. 71140888

CM442/CM444/CM448/CSF48 upgrade kit
- Extension module 485
- Modbus RS485 (+ Ethernet configuration)
- Order No. 71140889

CM442/CM444/CM448/CSF48 upgrade kit
- Extension module 485
- Modbus TCP (+ Ethernet configuration)
- Order No. 71140890

Kit CM442: Upgrade kit to CM444/CM448
- Extension power supply unit 100 to 230 V AC and extension backplane
- Basic module BASE-E
- Order No. 71135644

Kit CM442: Upgrade kit to CM444/CM448
- Extension power supply unit 24 V DC and extension backplane
- Basic module BASE-E
- Order no. 71211434

4.5.2 Firmware and activation codes

SD card with Liquiline firmware
- Industrial Flash Drive, 1 GB
- Order No. 71127100

Activation code for digital HART communication
- Order No. 71128428

Activation code for PROFIBUS DP
- Order No. 71135635

Activation code for Modbus RS485
- Order No. 71135636

Activation code for Modbus TCP
- Order No. 71135637

Kit CM442: Activation code for 2nd digital sensor input
- Order No. 71114663

Kit CM444/CM448: Upgrade code for 2 x 0/4 to 20 mA for BASE-E
- Order No. 71140891

Activation code for feedforward control
- Order no. 71211288

Activation code for measuring range switch
- Order no. 71211289

4.6 Software

Memobase Plus CYP71D
- PC software for supporting laboratory calibration
- Visualization and documentation of sensor management
- Database storage of sensor calibrations
- Order as per product structure, www.products.endress.com/cyp71d
- Technical Information TI00502C/07/EN

MS30 Field Data Manager software
- PC software for centralized data management
- Visualization of measurement series and logbook events
- SQL database for secure storage
- Order No. 71129799

4.7 Other accessories

4.7.1 SD card

SD card
- Industrial Flash Drive, 1 GB
- Order No. 71110815

4.7.2 Cable glands

Kit CM44x: gland M
- Set, 6 pieces
- Order No. 71101768

Kit CM44x: gland NPT
- Set, 6 pieces
- Order No. 71101770

Kit CM44x: gland G
- Set, 6 pieces
- Order No. 71101771

Kit CM44x: dummy plug for cable gland
- Set, 6 pieces
- Order No. 71104942

4.7.3 M12 socket and cable junction

Kit CM42/CM442/CM444/CM448: External CDI port
- Socket with terminated connecting cables and counter nut
- Order no. 51517507

Kit CM442/CM444/CM448/CSF48: M12 socket for digital sensors
- Prefabricated
- Order No. 71107456

Kit CM442/CM444/CM448/CSF48: M12 socket for PROFIBUS DP/Modbus RS485
- B-encoded, prefabricated
- Order No. 71140892

Kit CM442/CM444/CM448/CSF48: M12 socket for Ethernet
- D-encoded, prefabricated
- Order No. 71140893

Cable junction with Velcro strip
- 4 pieces, for sensor cable
- Order No. 71092051

Index

A

Accessories
- Activation codes 56
- Cable glands 57
- Extension modules 54
- M12 socket 57
- Measuring cable 49
- Post mounting kit 49
- SD card 57
- Sensors 50
- Software 56
- Weather protection 49

Activation codes 56

C

Cable glands 57
Calibration 43
Cleaning
- Assemblies 44
- Controller 43
- Sensors 44

Cleaning assemblies 44
Cleaning sensors 44
Cleaning the controller 43

D

Device behavior 14
Device information 39
Device test 39
Device-specific errors 13
Diagnostic information
- Fieldbus 13
- Onsite display 13
- Web browser 13

Diagnostic list 33
Diagnostic message
- Classification 14
- Device behavior, adjusting 14
- Device-specific 16
- Pending message 33
- Sensor-specific 20
- Settings for troubleshooting 31

Diagnostics 4
- Device test/reset 39
- Event logbook 34
- Sensor information 41
- Simulation 37
- System information 39

E

Error categories 14
Event logbook 34
Extension modules 54

F

Fieldbus 13
Firmware history 41

L

Logbooks 34–37

M

M12 socket 57
Maintenance 43
Measuring cable 49

O

Onsite display 13

P

Pending diagnostic message 33
Post mounting kit 49
Process error
- Chlorine 9
- pH/ORP 4

Process errors 4–11
- Conductivity 6
- ISE 10
- Oxygen 7
- Turbidity, SAC and nitrate 11

R

Reset 39

S

SD card 57
Sensor information. 41
Sensors
Chlorine 53
Conductivity, conductive 52
Conductivity, inductive. 52
Interface 54
ISE. 53
Nitrate 54
ORP sensors 51
Oxygen 53
Pfaudler electrodes. 50
pH glass electrodes. 50
pH-ISFET 52
SAC. 54
Turbidity. 54
Simulation 37
Spare parts 45
System information 39

T

Troubleshooting 4–33

W

Weather protection 49
Web browser 13

www.addresses.endress.com

Endress+Hauser

People for Process Automation

BA00450C/07/EN/17.13
71222845

Valid as of:
Softwareversion 01.04.00

Valid for:
CM442, CM444, CM448,
CM442R, CM444R, CM448R

Operating Instructions
Liquiline CM44x/CM44xR

Universal four-wire multichannel controller
Operation & settings

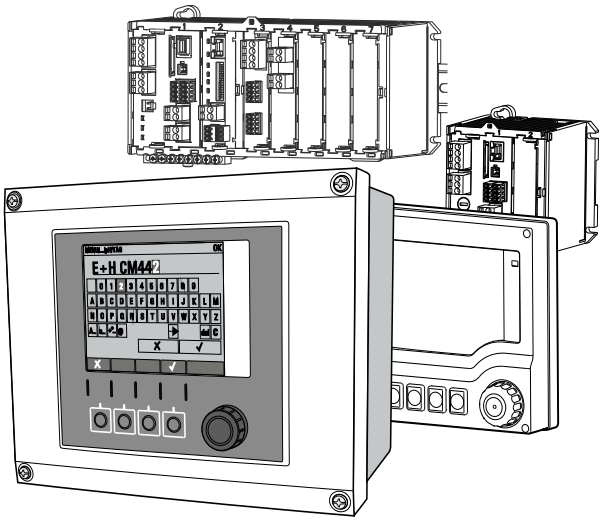

Endress+Hauser
People for Process Automation

Operation concept

This operation concept is valid for CM44x (field device) and CM44xR (DIN rail device) alike. The figures below show the field device.

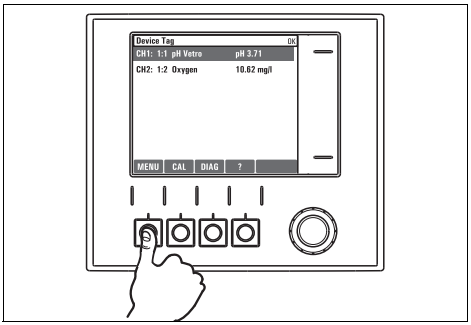

a0012790-en

Fig. 1: Pressing the soft key: selecting the menu directly

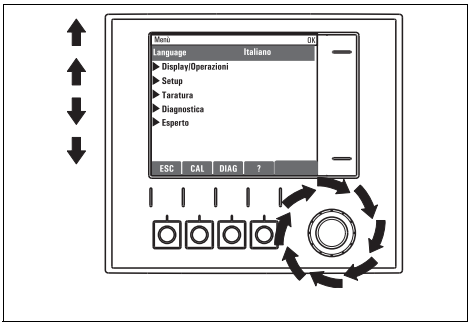

a0012791-en

Fig. 2: Turning the navigator: moving the cursor in the menu

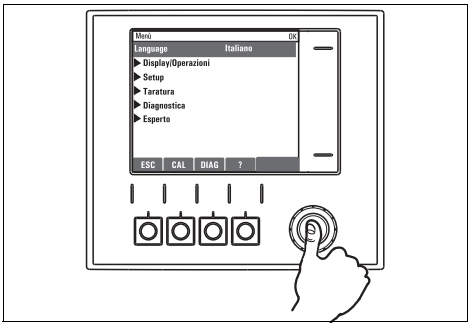

a0012792-en

Fig. 3: Pressing the navigator: launching a function

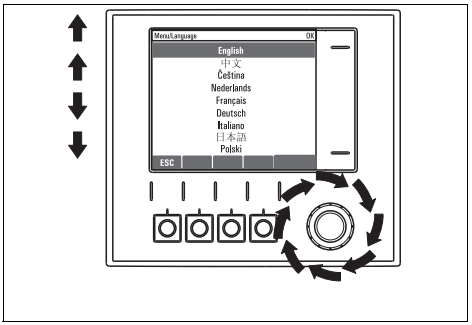

a0012793-en

Fig. 4: Turning the navigator: selecting a value (e.g. from a list)

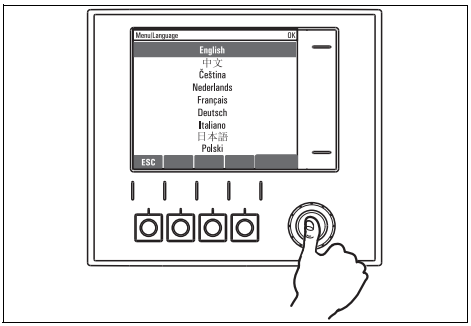

a0012794-en

Fig. 5: Pressing the navigator: accepting the new value

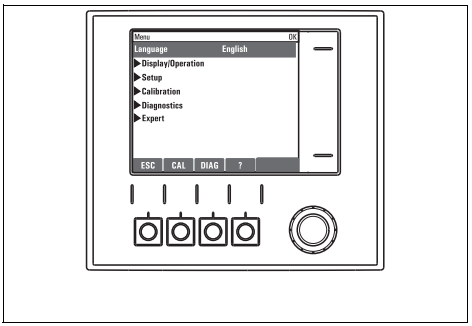

a0012795-en

Fig. 6: Result: new setting is accepted

Table of contents

1 About this manual 5

2 General settings 6
2.1 Basic settings 6
2.2 Date and time 7
2.3 Automatic hold 8
2.4 Logbooks 9
2.5 Extended setup 12

3 Information on sensors with the Memosens protocol 20

4 Inputs: General 21
4.1 Configuration 21
4.2 Frequently occurring functions 21

5 Inputs: pH/ORP Incl. combi sensors 28
5.1 Basic settings 28
5.2 Extended setup 29

6 Inputs: Conductivity 38
6.1 Basic settings 38
6.2 Extended setup 44

7 Inputs: Oxygen 48
7.1 Basic settings 48
7.2 Extended setup 49

8 Inputs: Chlorine 58
8.1 Basic settings 58
8.2 Extended setup 59

9 Inputs: Turbidity and solids . . 67
9.1 Basic settings 67
9.2 Extended setup 68

10 Inputs: SAC 72
10.1 Basic settings 72
10.2 Extended setup 73

11 Inputs: Nitrate 77
11.1 Basic settings 77
11.2 Extended setup 78

12 Inputs: ISE 82
12.1 Basic settings 82
12.2 Extended setup 83
12.3 Electrode slot menus 84
12.4 Limits operating hours 91

13 Inputs: Interface 92
13.1 Basic settings 92
13.2 Manual hold 92
13.3 Tank configuration 93
13.4 Sensor signal 94
13.5 Extended setup 95

14 Current inputs 98

15 Outputs 99
15.1 Current outputs 99
15.2 Alarm relay and optional relays 102
15.3 HART 106
15.4 PROFIBUS DP 107
15.5 Modbus RS485 and Modbus TCP 107

16 Binary inputs and outputs . . 108
16.1 Application examples 108
16.2 Binary input configuration 111
16.3 Configuration of binary outputs 113

17 Additional functions 116
17.1 Limit switch 116
17.2 Controller 121
17.3 Cleaning programs 131
17.4 Mathematical functions 132
17.5 Measuring range switch 138

18 Communication 142
18.1 Web server 142
18.2 Service interface 144
18.3 Fieldbuses 145

Index 146

1 About this manual

This manual gives a detailed account of all the configuration options **in the menu "Setup"**.

A description of the following menus is provided here:
- Inputs
  - Input configuration
  - Split into separate sections based on the different types of sensor that can be connected
- Outputs
  - Output configuration
  - Split into separate sections based on the different output types
- Additional functions
  - Settings for alarm sensors and controllers
  - Cleaning program configuration
  - Mathematical functions
- Data management
  - Firmware updates
  - Saving and loading configurations
  - Enter activation codes for extended functions

This manual does not include the following:
- Setup/General settings
  --> Operating Instructions "Commissioning", BA00444C (CM44x) or BA01225C (CM44xR)
- Display/Operation
  --> Operating Instructions "Commissioning", BA00444C (CM44x) or BA01225C (CM44xR)
- Calibration
  --> Operating Instructions "Calibration", BA00451C
- Diagnostics
  --> Operating Instructions "Maintenance & Diagnostics", BA00445C (CM44x) or BA01227C (CM44xR)
- Expert
  --> Internal Service Manual

2 General settings

2.1 Basic settings

Path: Menu/Setup/General settings

Function	Options	Info
Device tag	Customized text, 32 characters	Select any name for your controller. Use the TAG name for example.
Temperature unit	Options ▪ °C ▪ °F ▪ K **Factory setting** °C	
Current output range	Options ▪ 0 to 20 mA ▪ 4 to 20 mA **Factory setting** 4 to 20 mA	In accordance with Namur NE43, the linear range is from 3.8 to 20.5 mA (Current output range="4 to 20 mA") or from 0 to 20.5 mA (Current output range="0 to 20 mA"). If the range is exceeded or undershot, the current value stops at the range limit and a diagnostics message (460 or 461) is output.
Error current	0.0 to 23.0 mA **Factory setting** 21.5 mA	The function meets NAMUR NE43. Set the current value that should be output at the current outputs in the event of an error.
The value for "Error current" should be outside the measuring range. If you decided that your Current output range = "-0 to 20 mA", you should set an error current between 20.1 and 23 mA. If the Current output range = "4 to 20 mA" you could also define a value < 4 mA as the error current. The device allows an error current within the measuring range. In such instances pay attention to possible affects this may have on your process.		
Alarm delay	0 to 9999 s **Factory setting** 0 s	The system only displays the errors that are present longer than the set delay time. This makes it possible to suppress messages that only occur briefly and are caused by normal process-specific fluctuations.
Device Hold	Options ▪ Disabled ▪ Enabled **Factory setting** Disabled	You can activate an immediate, general hold here. The function acts in the same way as the "HOLD" soft key in the measuring menus.

2.2 Date and time

Path: Menu/Setup/General settings/Date/Time

Function	Options	Info
Set date	Depends on the format	Editing mode: Day (two-digit): 01 to 31 Month (two-digit): 01 to 12 Year (four-digit): 1970 to 2106
Set time	Depends on the format	Editing mode: hh (hour): 00 to 23 / 0 am to 12 pm mm (minutes): 00 to 59 ss (seconds): 00 to 59
▶ Extended setup		
Date format	Options ▪ DD.MM.YYYY ▪ YYYY-MM-DD ▪ MM-DD-YYYY **Factory setting** DD.MM.YYYY	Decide which date format you want to use.
Time format	Options ▪ HH:MM am (12h) ▪ HH:MM (24h) ▪ HH:MM:SS (24h) **Factory setting** HH:MM:SS (24h)	Decide whether you want to use the 12-hour or 24-hour clock. Seconds can also be displayed with the latter version.
Time zone	Options ▪ None ▪ Choice of 35 time zones **Factory setting** None	If no time zone is selected, then Greenwich Mean Time is used (London).
DST	Options ▪ Off ▪ Europe ▪ USA ▪ Manual **Factory setting** Off	The controller adapts the summertime/normal time changeover automatically if you choose European or American daylight saving time. Manual means that you can specify the start and end of daylight saving time yourself. Here, two additional submenus are displayed in which you specify the changeover date and time.

2.3 Automatic hold

Path: Menu/Setup/General settings/Automatic hold

Function	Options	Info
▶ Device specific hold		
Setup menu Diagnostics menu	Options ▪ Disabled ▪ Enabled **Factory setting** Disabled	Decide whether a hold should be output at the current output when the particular menu is opened.
Calibration active	**Factory setting** Enabled	
Hold release time	0 to 600 s **Factory setting** 0 s	The hold is maintained for the duration of the delay time when you switch to the measuring mode.

If a device-specific hold is activated, any cleaning previously started is interrupted. When a hold is active you can only start manual cleaning.

2.4 Logbooks

Logbooks record the following events:
- Calibration/adjustment events
- Operator events
- Diagnostic events

Here you define how the logbooks should store the data.
In addition, you are also able to define individual data logbooks. Assign the logbook name and select the measured value to be recorded. You can set the scan time (Scan time) individually for every data logbook.
More information on the logbooks is provided in BA "Maintenance & Diagnostics", BA00445C (CM44x) or BA01227C (CM44xR), "Diagnostics menu" section.

Path: Menu/Setup/General settings/Logbooks

Function	Options	Info
Logbook ident	Free text	Part of the file name when exporting a logbook.
Event logbook	Options ▪ Off ▪ Ring buffer ▪ Fill up buffer **Factory setting** Ring buffer	All diagnostic messages are recorded **Ring buffer** If the memory is full, the most recent entry automatically overwrites the oldest entry. **Fill up buffer** If the memory is full, there is an overflow, i.e. no new values can be saved. The controller displays a corresponding diagnostic message. The memory then has to be cleared manually.
▶ Overflow warnings *Event logbook="Fill up buffer"*		
Calibration logbook	Options ▪ Off ▪ On **Factory setting** Off	Decide whether you want to receive a diagnostic message from the controller in the event of fill-up buffer overrun of the logbook in question.
Diagnostic logbook		
Configuration logbook		
▶ Data logbooks		
▶ New		You can create a maximum of 8 data logbooks.
Logbook name	Customized text, 20 characters	
Source of data	Options ▪ Sensor inputs ▪ Controller ▪ Current inputs ▪ Fieldbus signals ▪ Mathematical functions **Factory setting** None	Select a data source for the logbook entries. You can choose from connected sensors, available controllers, current inputs, fieldbus signals and mathematical functions.

Path: Menu/Setup/General settings/Logbooks

Function	Options	Info
Measured value	Options ▪ depend onSource of data **Factory setting** None	You can record different measured values depending on the data source.
Scan time	00:00:01 to 01:00:00 **Factory setting** 00:01:00	Minimum interval between two entries Format: HH:MM:SS
Data logbook	Options ▪ Off ▪ Ring buffer ▪ Fill up buffer **Factory setting** Off	**Ring buffer** If the memory is full, the most recent entry automatically overwrites the oldest entry. **Fill up buffer** If the memory is full, there is an overflow, i.e. no new values can be saved. The controller displays a corresponding diagnostic message. The memory then has to be cleared manually.
▷ Add another logbook	Action	*Only if you want to create another data logbook immediately.* You add a new data logbook at a later date using ▶ New.
▷ Finished	Action	This allows you to exit the menu ▶ New.
▷ Start/stop simultaneously	Action	Appears if you have created more than one data logbook. With one mouse click, you can start or stop recording all the data logbooks.
▶ "Logbook name"		The name of this submenu is based on the name of the logbook and only appears once you have created a logbook.
This menu appears several times if you have several data logbooks.		
Source of data Measured value	Read only	This is for information purposes only. If you want to record another value, delete this logbook and create a new data logbook.
Log time left *Data logbook="Fill up buffer"*	Read only	Displays the days, hours and minutes remaining until the logbook is full.
Log size *Data logbook="Ring buffer"*	Read only	Displays the number of entries remaining until the logbook is full.
Logbook name	Customized text, 20 characters	You can change the name here again.
Scan time	00:00:01 to 01:00:00 **Factory setting** 00:01:00	As above Minimum interval between two entries Format: HH:MM:SS

Path: Menu/Setup/General settings/Logbooks

Function	Options	Info
Data logbook	Options ▪ Off ▪ Ring buffer ▪ Fill up buffer **Factory setting** Off	**Ring buffer** If the memory is full, the most recent entry automatically overwrites the oldest entry. **Fill up buffer** If the memory is full, there is an overflow, i.e. no new values can be saved. The controller displays a corresponding diagnostic message. The memory then has to be cleared manually.
▶ Line plotter		Menu to define the graphic display
Axes	Options ▪ Off ▪ On **Factory setting** On	Should the axes (x, y) be displayed (On) or not (Off)?
Orientation	Options ▪ Horizontal ▪ Vertical **Factory setting** Horizontal	You can choose whether the value curves should be displayed from left to right ("Horizontal") or from top to bottom ("Vertical"). If you want to display two data logbooks simultaneously, make sure that both logbooks have the same settings here.
X-Description Y-Description Grids Pitches	Options ▪ Off ▪ On **Factory setting** On	Decide whether a description should be displayed for the axes and whether gridlines should be shown. In addition, you can also decide whether pitches should be displayed.
X Pitch/Grid distance Y Pitch/Grid distance	10 to 50% **Factory setting** 10 %	Specify the pitches.
▷ Remove	Action	This action removes the data logbook. Any data that have not been saved are lost.

Example for setting up a new data logbook

1. Menu/Setup/General settings/Logbooks/Data logbooks/New:
   a. Logbook name: Assign a name, e.g. "01".
   b. Source of data: Select a data source, e.g. the sensor connected to channel 1 (CH1).
   c. Measured value: Select the measured value that you want to record.
   d. Scan time: Specify the interval between two logbook entries.
   e. Data logbook: Activate the logbook. Specify the type of memory, "Ring buffer" or "Fill up buffer".
2. ../Finished: Execute this action.
   --> Your new logbook now appears in the list of data logbooks.
3. Select the data logbook with the name "01".
4. If you selected "Fill up buffer" you can also decide whether you want to receive a diagnostic message in the event of memory overrun.
5. Depending on the type of memory selected, you receive information about the memory space (for "Ring buffer") or the time remaining until memory overrun "Fill up buffer").
6. Define the graphic display mode in the "Line plotter" submenu.

2.5 Extended setup

2.5.1 Diagnostics settings

The list of diagnostic messages displayed depends on the path selected. There are device-specific messages, and messages that depend on what sensor is connected.

Path: ... /Extended setup/Diagnostics settings/Diag. behavior

Function	Options	Info
List of diagnostic messages		Select the message to be changed. Only then can you make the settings for this message.
Diag. code	Read only	
Diagnostic message	Options ▪ On ▪ Off **Factory setting** Depends on the message	You can deactivate or reactivate a diagnostics message here. Deactivating means: ▪ No error message in the measuring mode ▪ No error current at the current output
Error current	Options ▪ On ▪ Off **Factory setting** Depends on the message	Decide whether an error current should be output at the current output if the diagnostic message display is activated.

Path: ... /Extended setup/Diagnostics settings/Diag. behavior

Function	Options	Info
Status signal	Options ▪ Maintenance (M) ▪ Out of specification (S) ▪ Function check (C) ▪ Failure (F) **Factory setting** Depends on the message	The messages are divided into different error categories in accordance with NAMUR NE 107. Decide whether you want to change a status signal assignment for your application.
Diag. output	Options ▪ None ▪ Alarm relay ▪ Relay 1 to n (depends on the device version) **Factory setting** None	You can use this function to select an output to which the diagnostic message should be assigned. Before you can assign the message to an output, you must first configure a relay output to "Diagnostics" (Menu/Setup/Outputs, assign the "Diagnostics" function and set the Operating mode to "as assigned").
An alarm relay is always available, regardless of the device version. Other relays are optional.		
Cleaning program	Options ▪ None ▪ Cleaning 1 ▪ Cleaning 2 ▪ Cleaning 3 ▪ Cleaning 4 **Factory setting** None	Decide whether the diagnostic message should trigger a cleaning program. You can define the cleaning programs under: Menu/Setup/Additional functions/Cleaning.
Detail information	Read only	Here you can find more information on the diagnostic message and instructions on how to resolve the problem.

2.5.2 HART bus address

If Multidrop is active (Bus address > 0), the current at current output 1 is fixed at 4 mA. Here, it does not matter what function has been assigned to the output (measured value/controller etc.). Current simulation is no longer possible.

Path: Menu/Setup/General settings/Extended setup/HART

Function	Options	Info
Bus address	0 to 63 **Factory setting** 0	You can change the device address to integrate several HART devices in a single network (Multidrop mode).

If you reset the device to the factory settings (Diagnostics/Systemtest/Reset/Factory default), the bus address is not reset. Your setting is retained.

2.5.3 PROFIBUS DP

Path: Menu/Setup/General settings/Extended setup/PROFIBUS

Function	Options	Info
Enable	Options ▪ Off ▪ On **Factory setting** Off	You can switch off PROFIBUS communication at this point. The software can then only be accessed via local operation.
Termination	Read only	If the device is the last in the bus, you can terminate via the hardware. --> BA00444C, "Wiring" section
Bus address	1 to 125	If you have addressed the bus via hardware (DIP switches on the module, --> BA00444C (CM44x) or BA01225C (CM44xR)), you can only read the address here. If an invalid address is set via the hardware, you have to assign a valid address for your device either here or via the bus.
Ident number	Options ▪ Automatic ▪ PA-Profile 3.02 (9760) ▪ Liquiline CM44x (155D) ▪ Liquiline CM44xR (155D) ▪ Liquistation CSFxx (155C) **Factory setting** Automatic	

2.5.4 Modbus

Path: Menu/Setup/General settings/Extended setup/Modbus

Function	Options	Info
Enable	Options ▪ Off ▪ On **Factory setting** Off	You can switch off Modbus communication at this point. The software can then only be accessed via local operation.
Termination	Read only	If the device is the last in the bus, you can terminate via the hardware. --> BA00444C or BA01225C, "Wiring" section
Settings		
Transmission Mode	Options ▪ TCP ▪ RTU ▪ ASCII	The transmission mode is displayed depending on the version ordered. In the case of RS485 transmission, you can choose between "RTU" and "ASCII".
Watchdog	0 to 999 s **Factory setting** 5 s	If no data transmission takes place for longer than the time set, this is an indicator that communication has been interrupted. After this time, input values received via the Modbus are considered to be invalid.

2.5.5 Ethernet

Path: Menu/Setup/General settings/Extended setup/Ethernet

Function	Options	Info
Enable	Options ▪ Off ▪ On **Factory setting** On	You can switch ethernet communication on and off at this point.
Settings		
Webserver	Options ▪ Off ▪ On **Factory setting** On	You can switch the internal Web server on and off at this point. **Off:** It is then not possible to access the device via the Web browser.
DHCP	Options ▪ Off ▪ On **Factory setting** Off	The Dynamic Host Configuration Protocol (DHCP) makes it possible to assign the network configuration to clients via a server. With DHCP, it is possible to automatically integrate the device into an existing network without the need for manual configuration. Normally, the client need only be configured for automatic retrieval of the IP addresses. During startup, the IP address, the netmask and the gateway are retrieved from a DHCP server.

Path: Menu/Setup/General settings/Extended setup/Ethernet

Function	Options	Info
IP-Address	xxx.xxx.xxx.xxx **Factory setting** 192.168.1.212	An IP address is an address in computer networks which are based on the Internet protocol (IP).
Netmask	xxx.xxx.xxx.xxx **Factory setting** 255.255.255.0	On the basis of the IP address of a device, the netmask specifies which IP addresses this device searches for in its own network and which addresses it could access in other networks via a router. It therefore divides the IP address into a network part (network prefix) and a device part. The network part must be identical for all devices in the individual network, and the device part must be different for every device within the network.
Gateway	x.x.x.x **Factory setting** 0.0.0.0	A gateway (protocol converter) enables communication between networks that are based on completely different protocols.
MAC-Address	Read only	The MAC address (Media Access Control address) is the hardware address of every individual network adapter which is used to uniquely identify the device in a computer network.
Modbus TCP port	Read only	The Transmission Control Protocol (TCP) is an arrangement (protocol) as to how data should be exchanged between computers. A port is a part of an address which assigns data segments to a network protocol.
Web server TCP port	Read only	

2.5.6 Data management

Firmware update

Please contact your local sales office for information on firmware updates available for your controller and its compatibility with earlier versions.
Your **current firmware version** can be found at: Menu/Diagnostics/System information/Software version.

First save your current setup on an SD card since a firmware update overwrites your settings with the factory settings. After updating the firmware, you can restore your setup by uploading it from the SD card.

To install a firmware update, you must have the update available on an SD card.

1. Insert the SD card into the controller card reader.
2. Go to: Menu/Setup/General settings/Extended setup/Data management/Firmware update.
   ↳ The update files on the SD card are displayed.
3. Select the desired update and select yes when the following question is displayed: The current firmware will be overwritten. After this the device will reboot. Do you want to proceed?
   ↳ The firmware is loaded and the device is then started with the new firmware.

Saving the setup

Saving the setup gives you the following advantages:
- Quick and easy to restore a setup following a firmware update
- Copying settings for other devices
- Quick and easy switching between various setups, e.g. for different user groups or for recurring sensor type change
- Restoring a tried-and-tested setup, e.g. if you have changed a lot of settings and no longer know what the original settings were

1. Insert the SD card into the controller card reader.
2. Go to: Menu/Setup/General settings/Extended setup/Data management/Save setup.
3. Assign a file name (Name).
4. Then select "Save".
5. If you have already assigned the file name, you will be asked whether you want to overwrite the existing setup.
6. Select "OK" to confirm, or cancel the action and give the file a new name.
   ↳ Your setup is stored on the SD card and you can upload it quickly to the device at a later date.

Loading the setup

You can load a setup you have saved quickly and easily

When you load a setup, the current configuration is overwritten. Note that cleaning and controller programs could be active. Do you want to continue anyway?

1. Insert the SD card into the controller card reader.
2. Go to: Menu/Setup/General settings/Extended setup/Data management/Load setup.
   ↳ A list of all the setups on the SD card is displayed.
3. Select the desired setup.
   ↳ The device then displays the following message:The current parameters will be overwritten and the device will reboot. Warning: Please note that cleaning and controller programs can be active. Do you want to proceed?
4. Select "OK" to confirm or cancel the action.
   ↳ The desired setup is restored after restarting the device.

Exporting the setup

Exporting the setup gives you the following advantages:
- Export in XML format with a stylesheet for formatted display in an XML-compatible application such as Microsoft Internet Explorer
- Importing the data (drag and drop the XML file into a browser window)

1. Insert the SD card into the controller card reader.
2. Go to: Menu/Setup/General settings/Extended setup/Data management/Export setup.
3. Assign a file name (Name).
4. Then select "Export".
5. If you have already assigned the file name, you will be asked whether you want to overwrite the existing setup.
6. Select "OK" to confirm, or cancel the action and give the file a new name.
   ↳ Your setup is saved on the SD card in a folder named "Device".

Activation code

You require activation codes for:
- Additional functions, e.g. fieldbus communication
- Software upgrades

If activation codes are available for your device, these codes are provided on the inner nameplate. The corresponding device functions are activated at the factory. You only require the codes if servicing the device.

1. Enter the activation code: Menu/Setup/General settings/Extended setup/Data management/Activation code.
2. Confirm your entry.

   ↳ Your new hardware or software function is activated and can be configured.

The table below tells you what functions an activation code enables:

Function	Activation code beginning with:
Second Memosens input (CM442 only)	062...
Two current outputs (BASE-E module only)	081...
HART	0B1...
PROFIBUS DP	0B3...
Modbus TCP	0B4...
Modbus RS485	0B5...
Measuring range switching, set 1	211...
Measuring range switching, set 2[1)]	212...
Feedforward control	220...

1) When you order the "Measuring range switching" option, you receive two activation codes. Enter both codes to have two sets for measuring range switching.

3 Information on sensors with the Memosens protocol

Sensors with the Memosens protocol have integrated electronics that save calibration data and other information. The sensor data are automatically communicated to the transmitter when the sensor is connected and are used to calculate the measured value.

Data digital sensors save include:
- Manufacturer data
  - Serial number
  - Order code
  - Date of manufacture
- Calibration data
  - Date of calibration
  - Calibration values
  - Number of calibrations
  - Serial number of the transmitter used to perform the last calibration
- Operating data
  - Date of initial commissioning
  - Hours of operation under extreme operating conditions
  - Sensor monitoring data

The specific data that are recorded and communicated to the transmitter depend on the sensor used. Differences can also occur within a sensor type.
This causes different menu items to be displayed or hidden depending on the sensor connected.
Pay attention to specific information in this manual.

Example:
The amperometric oxygen sensor COS51D cannot be sterilized. For this reason, you will not be able to define limit values for sterilization in the diagnostics settings for this sensor. On the other hand, these menu items are displayed for a sterilizable amperometric sensor, such as COS22D.

4 Inputs: General

4.1 Configuration

An input can be configured in one of two ways:

1. Configuration where a sensor is not connected
   - ▶ Select the appropriate channel.
   - ▶ From the list of sensor types, select the sensor which you want to configure.
   - ▶ Configure the channel as explained in following sections.
   - ▶ Connect the selected sensor type later on.
2. Configuration where a sensor is connected
   - ▶ Configure the channel as explained in following sections.

The following applies when configuring without a sensor:

- Some settings require sensor communication.
  You cannot make these settings if a sensor is not connected.
- It is also possible to save a setup and transfer it to another device (see "Data management" in the "General settings" section). This function might be a better option than performing a configuration when a sensor is not connected.

4.2 Frequently occurring functions

Some submenus are identical for all sensor types.
These submenus are explained below so you can find a description of these menus at one central place. Instead of repeating the description, the sensor-specific section then only contains a reference to this chapter.

4.2.1 Damping

The damping causes a floating average curve of the measured values over the time specified.

Path: Menu/Setup/Inputs/<Sensor type>

Function	Options	Info
Damping <Sensor type>	0 to 600 s **Factory setting** 0 s	You specify the damping of the main measured value of the connected sensor and that of the integrated temperature sensor.
Damping temp.		

4.2.2 Manual hold

Path: Menu/Setup/Inputs/<Sensor type>

Function	Options	Info
Manual hold	Options ▪ On ▪ Off **Factory setting** Off	**On** You can use this function to set the channel manually to "Hold". **Off** No hold

4.2.3 Cleaning

Path: Menu/Setup/Inputs/<Sensor type>/Extended setup

Function	Options	Info
Cleaning	Options ▪ None ▪ Cleaning 1 ▪ Cleaning 2 ▪ Cleaning 3 ▪ Cleaning 4 **Factory setting** None	Select a cleaning program. This program is executed: ▪ In a specified interval To do so, the cleaning program must be started. ▪ If a diagnostic message is pending on the channel **and** a cleaning has been specified for this message (--> "Inputs/Diagnostics settings/Diag. behavior").

You define the cleaning programs in the "Setup/Additional functions/Cleaning" menu.

4.2.4 Calibration timer and calibration expiration date

You can specify the calibration interval for the sensor here.
Once the time configured elapses, the "Calibration timer" diagnostics message appears on the display.

The timer is reset automatically if you recalibrate the sensor.

Path: Menu/Setup/Inputs/<Sensor type>/Extended setup/Calib. settings

Function	Options	Info
Calibration timer	Options ▪ Off ▪ On **Factory setting** Off	Switches the function on or off
Calibration timer value *Calibration timer="On"*	14 to 365 d (chlorine sensor) 1 to 10000 h (all others) **Factory setting** 180 d (chlorine sensor) 1000 h (all others)	Specify the time after which the timer should have timed out. Once this time has elapsed, the "Calib. Timer" diagnostics message, along with the code 102, appears on the display.
Calib. expiration date	Options ▪ Off ▪ On **Factory setting** Off	The function checks whether the calibration of a sensor is still valid. Example: You install a precalibrated sensor. The function checks how much time has elapsed since the sensor was last calibrated. A diagnostics message is displayed if the time since the last calibration is longer than the predefined warning and alarm limit.
▶ Calib. expiration date		
Warning limit	**Factory setting** 11 months	Diagnostics message: 105 "Calib. validity"
Alarm limit	**Factory setting** 12 months	Diagnostics message: 104 "Calib. validity"
Warning and alarm limits mutually affect each other's possible ranges for adjustment. Range of adjustment which must include both limits: 1 to 24 months Generally the following applies: alarm limit > warning limit		

4.2.5 Process check system (PCS)

The process check system (PCS) checks the measuring signal for stagnation. An alarm is triggered if the measuring signal does not change over a certain period (several measured values).

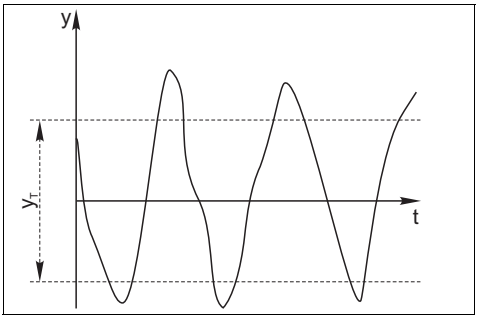

Fig. 7: Normal measuring signal, no alarm

y *Measuring signal*
y_T *Set value for "Tolerance width"*

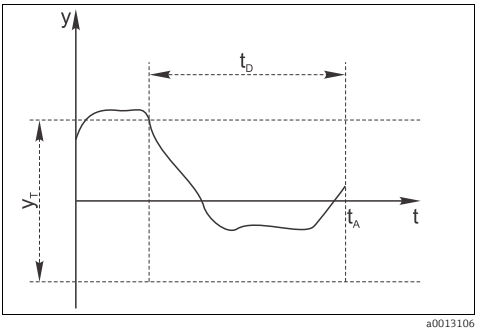

Fig. 8: Stagnating signal, alarm is triggered

t_D *Set value for "Duration"*
t_A *Time when the alarm is triggered*

The main causes of stagnating measured values are:
- Sensor fouled or outside the medium
- Sensor defective
- Process error (e.g. through control system)

Remedial action
- ▶ Clean the sensor.
- ▶ Check the position of the sensor in the medium.
- ▶ Check the measuring chain.
- ▶ Switch off the controller and switch it back on again.

Path: Menu/Setup/Inputs/<Sensor type>/Extended setup/Diagnostics settings

Function	Options	Info
▶ Process Check System		Diagnostics code and associated message text: 904 "Process check"
Function	Options ▪ On ▪ Off **Factory setting** Off	
Duration	1 to 240 min **Factory setting** 60 min	The measured value must change during this time. Otherwise the error message is triggered.

Path: Menu/Setup/Inputs/<Sensor type>/Extended setup/Diagnostics settings

Function	Options	Info
Tolerance width *Not available for pH/*ORP	The range depends on the sensor **Factory setting** Depends on the sensor	Interval around the measuring signal (raw value) for detecting stagnation. Measured values within the set interval are regarded as stagnating.

4.2.6 Diagnostic behavior

The list of diagnostic messages displayed depends on the path selected. There are device-specific messages, and messages that depend on what sensor is connected.

Path: ... /Extended setup/Diagnostics settings/Diag. behavior

Function	Options	Info
List of diagnostic messages		Select the message to be changed. Only then can you make the settings for this message.
Diag. code	Read only	
Diagnostic message	Options ▪ On ▪ Off **Factory setting** Depends on the message	You can deactivate or reactivate a diagnostics message here. Deactivating means: ▪ No error message in the measuring mode ▪ No error current at the current output
Error current	Options ▪ On ▪ Off **Factory setting** Depends on the message	Decide whether an error current should be output at the current output if the diagnostic message display is activated.
Status signal	Options ▪ Maintenance (M) ▪ Out of specification (S) ▪ Function check (C) ▪ Failure (F) **Factory setting** Depends on the message	The messages are divided into different error categories in accordance with NAMUR NE 107. Decide whether you want to change a status signal assignment for your application.
Diag. output	Options ▪ None ▪ Alarm relay ▪ Relay 1 to n (depends on the device version) **Factory setting** None	You can use this function to select an output to which the diagnostic message should be assigned. Before you can assign the message to an output, you must first configure a relay output to "Diagnostics" (Menu/Setup/Outputs, assign the "Diagnostics" function and set the Operating mode to "as assigned").
An alarm relay is always available, regardless of the device version. Other relays are optional.		

Path: ... /Extended setup/Diagnostics settings/Diag. behavior

Function	Options	Info
Cleaning program	Options ▪ None ▪ Cleaning 1 ▪ Cleaning 2 ▪ Cleaning 3 ▪ Cleaning 4 **Factory setting** None	Decide whether the diagnostic message should trigger a cleaning program. You can define the cleaning programs under: Menu/Setup/Additional functions/Cleaning.
Detail information	Read only	Here you can find more information on the diagnostic message and instructions on how to resolve the problem.

4.2.7 Sterilizations

The system counts the number of operating hours in which the sensor is exposed to a temperature that is typical for a sterilization. This temperature depends on the sensor.

Path: Menu/Setup/Inputs/<Sensor type>/Extended setup/Diagnostics settings

Function	Options	Info
▶ Sterilizations	0 to 99	Specify the limit values for the number of sensor sterilizations.
Function	Options ▪ On ▪ Off **Factory setting** Off	
Warning limit	**Factory setting** 30[1)]	Diagnostics code and associated message text: 108 "Sterilization"

1) For oxygen: 25

4.2.8 Tag control

With this function, you specify which sensors are accepted at your device.

"Tag" stands for the name of a measuring point, and is used in many areas of process measuring technology.

Path: Menu/Setup/Inputs/<Sensor type>/Extended setup

Function	Options	Info
▶ Tag control		Additional information on the display: tag control currently used
Operating mode	Options ▪ Off ▪ Tag ▪ Group **Factory setting** Off	**Off** No tag control, all sensors are accepted. **Tag** Only sensors with the same tag are accepted. **Group** Only sensors in the same tag group are accepted.
Tag	Free text **Factory setting** EH_CM44_	Enter the tag name. The controller checks every sensor to be connected as to whether this sensor belongs to the measuring point, and only accepts the sensors that have the same tag.
Group	Numerical **Factory setting** 0	

4.2.9 Sensor replacement

When the sensor is replaced, the last measured value is retained via the "hold" function. A diagnostics message is not triggered.

4.2.10 Data processing factory setting

Here you can restore the factory settings for the sensor input. For this purpose, simply press the navigator button and select "OK" when the prompt for the device software appears.
Only the factory settings for this particular input are restored. All other settings remain unchanged.

4.2.11 Sensor factory setting

Here you can restore the sensor factory settings. For this purpose, simply press the navigator button and select "OK" when the prompt for the device software appears.
Only the factory settings for the sensor are restored. The settings for the input remain unchanged.

5 Inputs: pH/ORP Incl. combi sensors

5.1 Basic settings

5.1.1 Sensor identification

Path: Menu/Setup/Inputs/<Sensor type>

Function	Options	Info
Channel	Options ▪ On ▪ Off **Factory setting** On	**On** The channel display is switched on in the measuring mode **Off** The channel is not displayed in the measuring mode, regardless of whether a sensor is connected or not.
Sensor type	Read only (Only available if a sensor is connected)	Connected sensor type
Order code		Order code of the connected sensor

5.1.2 Main value

Path: Menu/Setup/Inputs/pH or Redox or pH/Redox

Function	Options	Info
Main value	Options ▪ pH(only pH sensor) ▪ mV ▪ % (only ORP sensor) ▪ Redox mV (only combi sensor) ▪ Redox % (only combi sensor) ▪ rH (only combi sensor) **Factory setting** pH (pH sensor and combi sensors) mV(ORP sensor)	Select how the main measured value should be displayed. You can display the main measured value of a pH sensor as a pH value or as a raw value in mV. If using an ORP sensor, here you decide which ORP mode to use: mV or %. If you have connected a combi sensor, you can also select the rH value. Subsequent configuration options depend on the option selected here.

5.1.3 Damping

--> "Inputs: General/Frequently occurring functions" section → 21

5.1.4 Manual hold

--> "Inputs: General/Frequently occurring functions" section → 21

5.2 Extended setup

5.2.1 Temperature and medium compensation (only pH)

Path: Menu/Setup/Inputs/pH or pH/Redox/Extended setup

Function	Options	Info
Temp. compensation	Options ▪ Off ▪ Automatic ▪ Manual **Factory setting** Automatic	Decide how you want to compensate the medium temperature: ▪ Automatically using the temperature sensor of your sensor (ATC) ▪ Manually by entering the medium temperature ▪ Not at all
This setting only refers to compensation during measurement. You enter the compensation for calibration in the calibration settings.		
Medium comp. *only pH sensor*	Options ▪ Off ▪ 2-point ▪ Table **Factory setting** Off	Take a sample from the medium and determine its pH value at different temperatures in the lab. Decide whether you want to compensate using two points or several points in a table.
The dissociation of water changes with increasing temperature. The balance shifts towards the protons; the pH value drops. You can balance out this effect with the "Medium compensation" function.		
Internal buffer *(only pH glass or combi sensor)*	pH 0 to 14 **Factory setting** pH 7.00	Only change the value if you are using a sensor with an internal buffer other than pH 7.

5.2.2 Measured value formats

Path: Menu/Setup/Inputs/pH or Redox or pH/Redox/Extended setup

Function	Options	Info
Main value format *(only pH)*	Options ▪ #.# ▪ #.## **Factory setting** #.#	Specify the number of decimal places for displaying the main measured value.
Temperature format	Options ▪ #.# ▪ #.## **Factory setting** #.#	Select how many decimal places should be used to display the temperature.

5.2.3 Cleaning

--> "Inputs: General/Frequently occurring functions" section → 📄 21

5.2.4 Calibration settings

Stability criteria

You define the permitted measured value fluctuation which must not be exceeded in a certain timeframe during calibration.
If the permitted difference is exceeded, calibration is not permitted and is aborted automatically.

Path: Menu/Setup/Inputs/<Sensor type>/Extended setup/Calib. settings

Function	Options	Info
▶ Stability criteria		
Delta mV	1 to 10 mV **Factory setting** 1 mV	Permitted measured value fluctuation during calibration
Duration	10 to 60 s **Factory setting** 20 s	Timeframe within which the permitted range for measured value fluctuation should not be exceeded

Buffer recognition (only pH or combi sensor)

Automatic buffer recognition
To ensure a buffer is detected correctly, the measuring signal may deviate by a maximum of 30 mV from the value stored in the buffer table. This is approx. 0.5 pH at a temperature of 25 °C. If both buffers - 9.00 and 9.20 - were used, this would cause the signal intervals to overlap and buffer recognition would not work. For this reason, the device would recognize a buffer with a pH of 9.00 as a pH of 9.20. --> Do not use the buffer with a pH of 9.00 for automatic buffer recognition.

Path: Menu/Setup/Inputs/pH or pH/Redox/Extended setup/Calib. settings

Function	Options	Info
Temp. compensation	Options ▪ Off ▪ Automatic ▪ Manual **Factory setting** Automatic	Decide how you want to compensate the buffer temperature: ▪ Automatically using the temperature sensor of your sensor (ATC) ▪ Manually by entering the buffer temperature ▪ Not at all

Path: Menu/Setup/Inputs/pH or pH/Redox/Extended setup/Calib. settings

Function	Options	Info
Temperature *Temp. compensation="Manual"*	-50 to 250 °C (-58 to 482 °F) **Factory setting** 25 °C (77 °F)	Specify the buffer temperature.
This setting only refers to compensation during calibration, not in measuring mode. You perform the compensation in the measuring mode further down in the menu.		
Buffer recognition	Options ▪ Fixed ▪ Automatic*(only pH glass or combi sensor)* ▪ Manual **Factory setting** Fixed	**Fixed** You choose values from a list. This list depends on the setting for "Buffer manufacturer". **Automatic***(only pH glass or combi sensor)* The device recognizes the buffer automatically. The recognition depends on the setting for "Buffer manufacturer". **Manual** You enter any two buffer values. These must differ in terms of their pH value.
Buffer manufacturer	Options ▪ Endress+Hauser ▪ Ingold/Mettler ▪ DIN 19266 ▪ DIN 19267 ▪ Merck/Riedel ▪ Hamilton ▪ Special buffer **Factory setting** Endress+Hauser	Temperature tables are stored internally in the unit for the following pH values: ▪ Endress+Hauser 2.00 / 4.00 / 7.00 / *(9.00)* / 9.20 / 10.00 / 12.00 ▪ Ingold/Mettler 2.00 / 4.01 / 7.00 / 9.21 ▪ DIN 19266 1.68 / 4.01 / 6.86 / 9.18 ▪ DIN 19267 1.09 / 4.65 / 6.79 / 9.23 / 12.75 ▪ Merck/Riedel 2.00 / 4.01 / 6.98 / 8.95 / 12.00 ▪ Hamilton 1.09 / 1.68 / 2.00 / 3.06 / 4.01 / 5.00 / 6.00 7.00 / 8.00 / 9.21 / 10.01 / 11.00 / 12.00
You have the possibility of defining two buffers of your own with the "Special buffer" option. For this purpose, two tables are displayed in which you can enter value pH value/temperature value pairs.		

Calibration timer and calibration expiration date

--> "Inputs: General/Frequently occurring functions" section → 21

5.2.5 Diagnostics settings

This menu branch is used for specifying warning limits, and for defining whether and how diagnostics tools should be used.
The associated diagnostics code is displayed for every setting.

Sensor check system (only pH glass or combi sensor)

The sensor check system (SCS) monitors the high impedance of the pH glass.
An alarm is issued if a minimum impedance value is undershot or a maximum impedance is exceeded.

- Glass breakage is the main reason for a drop in high impedance values.
- The reasons for increasing impedance values include:
  - Dry sensor
  - Worn pH glass membrane.

Path: Menu/Setup/Inputs/pH or pH/Redox/Extended setup/Diagnostics settings

Function	Options	Info
▶ Glass impedance (SCS)	0 to 10000 MΩ	Specify your limit values for monitoring the impedance of the pH glass.
Upper limit	Options ▪ On ▪ Off **Factory setting** On	**On** SCS operates with the following settings for the upper warning and alarm limits. **Off** SCS is switched off.
Upper alarm limit	**Factory setting** 2000 MΩ	Diagnostics code and associated message text: 124 "Sensor glass"
Upper warning limit	**Factory setting** 1600 MΩ	Diagnostics code and associated message text: 125 "Sensor glass"
Lower limit	Options ▪ On ▪ Off **Factory setting** On	**On** SCS operates with the following settings for the lower warning and alarm limits. **Off** SCS is switched off.
Lower warning limit	**Factory setting** 1 MΩ	Diagnostics code and associated message text: 123 "Sensor glass"
Lower alarm limit	**Factory setting** 0 MΩ	Diagnostics code and associated message text: 122 "Sensor glass"

The upper and lower limit values of the glass SCS value can be switched on or off independently of each other.

Slope (only pH or combi sensor)

The slope characterizes the sensor condition. The bigger the deviation from the ideal value (59 mV/pH) the poorer the condition of the sensor.

Path: Menu/Setup/Inputs/pH or pH/Redox/Extended setup/Diagnostics settings

Function	Options	Info
▶ Slope	5.00 to 99.00 mV/pH	Specify your limit values for slope monitoring.
Warning limit	**Factory setting** 55.00 mV/pH	Associated diagnostics code and message text: 509 "Sensor calib."

Zero point (only pH glass or combi sensor) or Operating point (only pH ISFET)

pH glass sensors
The zero point characterizes the condition of the sensor reference. The bigger the deviation from the ideal value (pH 7.00) the poorer the condition. This can be caused by KCl dissolving away or reference contamination.

Path: Menu/Setup/Inputs/pH or pH/Redox/Extended setup/Diagnostics settings

Function	Options	Info
▶ Zero point *(pH glass or combi sensor)* Operating point *(pH ISFET)*	**pH glass** -2.00 to 16.00 **pH ISFET** -950 mV to 950 mV	Specify your limit values for zero point or operating point monitoring.
Upper warning limit	**Factory setting** pH 8.00 / 300 mV	Associated diagnostics code and message text: 505 "Sensor calib." (pH glass) 515 "Sensor calib." (pH ISFET)
Lower warning limit	**Factory setting** pH 6.00 / -300 mV	Associated diagnostics code and message text: 507 "Sensor calib." (pH glass) 517 "Sensor calib." (pH ISFET)

Sensor condition check (only pH glass or combi sensor)

Sensor condition check (SCC) monitors the electrode status and the degree of electrode aging. The electrode status is updated after every calibration.

The main reasons for a deteriorating electrode status are:
- Glass membrane blocked or dry
- Diaphragm (reference) blocked

Remedial action
- ▶ Clean or regenerate the sensor.
- ▶ Replace the sensor if this does not have the desired effect.

Path: Menu/Setup/Inputs/pH or pH/Redox/Extended setup/Diagnostics settings

Function	Options	Info
▶ Sensor Condition Check		The function can only be switched on or off. It uses internal limit values
Function	Options ▪ On ▪ Off **Factory setting** On	Diagnostics code and associated message text: 127 "SCC sufficient" 126 "SCC bad"

Redox-Meas value (only ORP or combi sensor in ORP or rH mode)

You can specify limit values in order to monitor your process. A diagnostics message is displayed if the limits are exceeded or undershot.

Path: Menu/Setup/Inputs/Redox or pH/Redox/Extended setup/Diagnostics settings

Function	Options	Info
▶ Redox-Meas value		Specify your limit values for monitoring the measured value.
Upper warning limit	**Factory setting** 900 mV	Diagnostics code and associated message text: 942 "Process value"
Lower warning limit	**Factory setting** -900 mV	Diagnostics code and associated message text: 943 "Process value"

Process check system

--> "Inputs: General/Frequently occurring functions" section → 📄 21

Limits operating hours

The total operating time of the sensor and its use under extreme conditions is monitored. If the operating time exceeds the defined threshold values, the device issues a corresponding diagnostics message.

Each sensor has a limited life expectancy which heavily depends on the operating conditions. If you specify warning limits for operating times under extreme conditions, you can guarantee the operation of your measuring point without any downtime by performing maintenance tasks in time.

Path: Menu/Setup/Inputs/pH or Redox or pH/Redox/Extended setup/Diagnostics settings

Function	Options	Info
▶ Limits operating hours		Specify your limit values for monitoring the number of operating hours under extreme conditions.
The range of adjustment for the operating hours alarm and warning limits is generally 1 to 50000 h.		
Function	Options ▪ On ▪ Off **Factory setting** On	**On** The operation of the sensor under extreme conditions is monitored, recorded in the sensor and diagnostics messages are displayed on the controller. **Off** No diagnostics messages. However, the time the sensor operates under extreme conditions is recorded in the sensor and can be read in the sensor information in the diagnostics menu.
▶ Operating time		Total operating time of the sensor
Warning limit	**Factory setting** 10000 h	Diagnostics code and associated message text: 199 "Operating time"
▶ Operation > 80°C		
Warning limit	**Factory setting** 10000 h	Diagnostics code and associated message text: 193 "Operating time"
▶ Operation > 100°C		
Warning limit	**Factory setting** 10000 h	Diagnostics code and associated message text: 194 "Operating time"
▶ Operation < -300 mV		*only pH* or combi sensor
Warning limit	**Factory setting** 10000 h	Diagnostics code and associated message text: 180 "Operating time"
▶ Operation > 300 mV		*only pH* or combi sensor
Warning limit	**Factory setting** 10000 h	Diagnostics code and associated message text: 179 "Operating time"

Delta slope(only pH)

The device determines the difference in slope between the last calibration and the penultimate calibration, and issues a warning or an alarm depending on the setting configured. The difference is an indicator for the condition of the sensor. The greater the change, the greater the wear experienced by the pH-sensitive glass membrane as a result of chemical corrosion or abrasion.

Path: Menu/Setup/Inputs/pH or pH/Redox/Extended setup/Diagnostics settings

Function	Options	Info
▶ Delta slope	0.10 to 10.00 mV/pH	Specify your limit values for monitoring the slope differential.
Function	Options ▪ On ▪ Off **Factory setting** Off	
Warning limit	**Factory setting** 5.00 mV/pH	Diagnostics code and associated message text: 518 "Sensor calib."

Delta zero point (only pH glass or combi sensor) or Delta operating point (only pH ISFET)

The device determines the difference between the last calibration and the penultimate calibration, and issues a warning or an alarm depending on the setting configured. The difference is an indicator for the condition of the sensor. The following applies to pH glass electrodes: The greater the change, the greater the wear experienced by the reference as a result of contaminating ions or KCl dissolving away.

Path: Menu/Setup/Inputs/pH or pH/Redox/Extended setup/Diagnostics settings

Function	Options	Info
▶ Delta zero point *(pH glass or combi sensor)* Delta operating point *(pH ISFET)*	**pH glass** pH 0.00 to 2.00 **pH ISFET** 0 to 950 mV	Specify your limit values for monitoring the zero point or operating point differential.
Function	Options ▪ On ▪ Off **Factory setting** Off	
Warning limit	**Factory setting** pH 0.50 / 25 mV	Diagnostics code and associated message text: 520 "Sensor calib." (pH glass) 522 "Sensor calib." (pH ISFET)

Sterilizations

--> "Inputs: General/Frequently occurring functions" section → 21

Diagnostic behavior

--> "Inputs: General/Frequently occurring functions" section → 21

5.2.6 Tag control

--> "Inputs: General/Frequently occurring functions" section → 21

5.2.7 Sensor replacement

--> "Inputs: General/Frequently occurring functions" section → 21

5.2.8 Data processing factory setting

--> "Inputs: General/Frequently occurring functions" section → 21

6 Inputs: Conductivity

6.1 Basic settings

6.1.1 Sensor identification

Path: Menu/Setup/Inputs/<Sensor type>

Function	Options	Info
Channel	Options ▪ On ▪ Off **Factory setting** On	**On** The channel display is switched on in the measuring mode **Off** The channel is not displayed in the measuring mode, regardless of whether a sensor is connected or not.
Sensor type	Read only (Only available if a sensor is connected)	Connected sensor type
Order code		Order code of the connected sensor

6.1.2 Damping

--> "Inputs: General/Frequently occurring functions" section → 21

6.1.3 Manual hold

--> "Inputs: General/Frequently occurring functions" section → 21

6.1.4 Operating mode and cell constant

Path: Menu/Setup/Inputs/Conductivity

Function	Options	Info
Operating mode	Options ▪ Conductivity ▪ Resistance *(only Cond c)* ▪ Concentration *(only Cond i)* ▪ TDS *(only Cond c)* **Factory setting** Conductivity	Alternatively to the conductivity, you can also measure the resistivity and the total dissolved solids (TDS) parameter with a **conductive conductivity sensor**. Alternatively to the conductivity, you can determine the concentration of the medium with an **inductive conductivity sensor**. **TDS** TDS stands for all the organic and inorganic substances in the water in ionic, molecular or microgranular (<2 µm) form. Compared with laboratory methods (gravimetric analysis), TDS measurement via the conductivity value delivers a maximum measured error of less than 10%.
Cell constant	Read only (Only available if a sensor is connected)	The cell constant of the connected sensor is displayed (--> sensor certificate)

6.1.5 Installation factor (only inductive sensors)

Path: Menu/Setup/Inputs/Conductivity

Function	Options	Info
Inst. factor	Read only (Only available if a sensor is connected)	Displays the current value. Only changes with a calibration.

In confined installation conditions, the wall affects conductivity measurement in the liquid. The installation factor compensates for this effect. The transmitter corrects the cell constant by multiplying by the installation factor.
The size of the installation factor depends on the diameter and the conductivity of the pipe nozzle, as well as the distance between the sensor and the wall.
If there is a sufficient distance between the wall and the sensor (a > 15 mm (0.59"), from DN 80), the installation factor f does not have to be taken into consideration (f = 1.00).
If distances from the wall are smaller, the installation factor is bigger for electrically insulating pipes (f >1), and smaller for electrically conductive pipes (f < 1).
It can be measured using calibration solutions, or a close approximation determined from the following diagram.

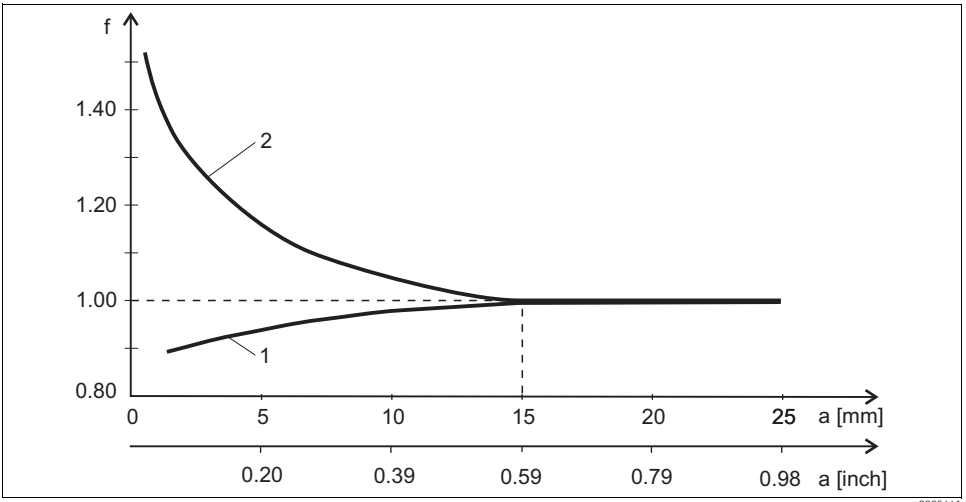

Fig. 9: Relation between the installation factor f and the wall distance

1 Electrically conductive pipe wall
2 Electrically insulating pipe wall

6.1.6 Concentration table (only inductive sensors)

Path: Menu/Setup/Inputs/Conductivity

Function	Options	Info
Conc. Table *(Operating mode=Concentration)*	Options ▪ NaOH 0..15% ▪ HCl 0..20% ▪ HNO3 0..25% ▪ HNO3 24..30% ▪ H2SO4 0..28% ▪ H2SO4 40..80% ▪ H2SO4 93..100% ▪ H3PO4 0..40% ▪ NaCl 0..26% ▪ User table 1 ▪ User table 2 ▪ User table 3 ▪ User table 4 **Factory setting** NaOH 0..15%	Concentration tables saved at the factory: NaOH: 0 to 15%, 0 to 100 °C (32 to 212 °F) HCl: 0 to 20%, 0 to 65 °C (32 to 149 °F) HNO_3: 0 to 25%, 2 to 80 °C (36 to 176 °F) H_2SO_4: 0 to 28%, 0 to 100 °C (32 to 212 °F) H_2SO_4: 40 to 80%, 0 to 100 °C (32 to 212 °F) H_2SO_4: 93 to 100%, 0 to 100 °C (32 to 212 °F) H_3PO_4: 0 to 40%, 2 to 80 °C (36 to 176 °F) NaCl: 0 to 26%, 2 to 80 °C (36 to 176 °F)
Temp. comp. mode *(Operating mode=Concentration)*	Options ▪ with temp. comp ▪ without temp. comp **Factory setting** with temp. comp	Only select "without temp. comp" in very small temperature ranges. In all other cases, select "with temp. comp".
Table name *(Conc. Table=one of the user tables)*	Customized text, 16 characters	Assign a meaningful name to the selected table.
▶ Edit table *(Conc. Table=one of the user tables)*	3-column table	Assign conductivity and concentration value pairs for a specific temperature.
Conc. unit *(Operating mode=Concentration)*	**Read only** %	This is for information purposes only. No options are available.

Example of a concentration table:

Conductivity (uncompensated)	Concentration	Temperature
1.000 mS/cm	0.000 mg/l	0.00 °C
2.000 mS/cm	0.000 mg/l	100.00 °C
100.0 mS/cm	3.000 mg/l	0.00 °C
300.0 mS/cm	3.000 mg/l	100.00 °C

Values must be constantly increasing or decreasing.

6.1.7 Unit and format

Path: Menu/Setup/Inputs/Conductivity

Function	Options	Info
Main value format	Options ▪ Auto ▪ # ▪ #.# ▪ #.## ▪ #.### **Factory setting** Auto	Specify the number of decimal places.
Cond. unit *(Operating mode=Conductivity)* Unit *(Operating mode=Resistance)*	Options Conductivity/resistance ▪ Auto / Auto ▪ µS/cm / MΩm ▪ mS/cm / MΩcm ▪ S/cm / kΩcm ▪ µS/m / kΩm ▪ mS/m / Ωm ▪ S/m / Ωcm **Factory setting** Auto / Auto	The picklist depends on the operating mode. You can either choose from units for conductivity or units for resistivity. Since there are no options for concentration measurement, this function is not displayed for such measurements.

6.1.8 Temperature compensation

Temperature coefficient α= change in the conductivity per degree of temperature change:
$\kappa(T) = \kappa(T_0)(1 + \alpha(T - T_0))$
$\kappa(T)$ ... conductivity at process temperature T
$\kappa(T_0)$ ... conductivity at reference temperature T_0

The temperature coefficient depends both on the chemical composition of the solution and the temperature itself.

Path: Menu/Setup/Inputs/Conductivity

Function	Options	Info
Temp. source	Options ▪ Sensor ▪ Manual **Factory setting** Sensor	Decide how you want to compensate the medium temperature: ▪ Automatically using the temperature sensor of your sensor ▪ Manually by entering the medium temperature
Medium temperature *(Temp. source=Manual)*	-50.0 to 250.0 °C (-58.0 to 482.0 °F) **Factory setting** 25.0 °C (77 °F)	Enter the temperature of your medium.

Path: Menu/Setup/Inputs/Conductivity

Function	Options	Info
Compensation *(Operating mode=Conductivity)*	Options ▪ None ▪ Linear ▪ NaCl (IEC 746-3) ▪ Water ISO7888 (20°C) ▪ Water ISO7888 (25°C) ▪ UPW NaCl ▪ UPW HCl ▪ User table 1 ▪ User table 2 ▪ User table 3 ▪ User table 4 **Factory setting** Linear	Various methods are available to compensate for the temperature dependency. Depending on your process, decide which type of compensation you want to use. Alternatively, you can also select "None" and thus measure uncompensated conductivity.

Linear temperature compensation

The change between two temperature points is taken to be constant, i.e. α = const. The value for alpha remains stored in the sensor and is recalculated for each calibration.

Reference temperature and alpha coefficient (only for linear temperature compensation)

The alpha coefficients and alpha reference temperatures of your process medium must be known. Typical alpha coefficients at a reference temperature from 25 °C are:

- Salts (e.g. NaCl): approx. 2.1 %/K
- Bases (e.g. NaOH): approx. 1.7 %/K
- Acids (e.g. HNO_3): approx. 1.3 %/K

Path: Menu/Setup/Inputs/Conductivity

Function	Options	Info
Ref. temp.	-5.0 to 100.0 °C (23.0 to 212.0 °F) **Factory setting** 25.0 °C (77.0 °F)	Reference temperature for calculating the temperature-compensated conductivity
Factor alpha	0.000 to 20.000 %/K **Factory setting** 2.100 %/K	Enter the conductivity coefficient of your process medium

NaCl compensation
In the case of NaCl compensation (as per IEC 60746), a fixed non-linear curve specifying the relationship between the temperature coefficient and temperature is saved in the device. This curve applies to low concentrations of up to approx. 5 % NaCl.

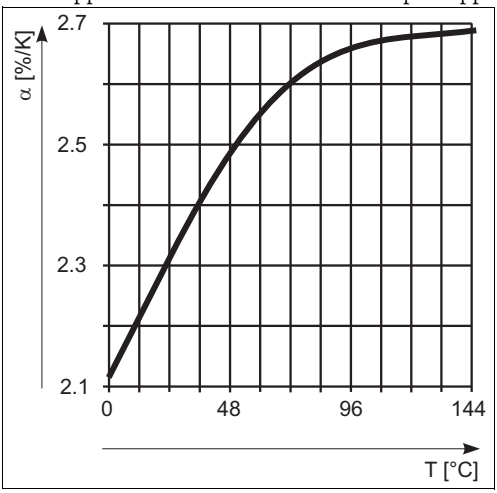

Compensation for natural water
A non-linear in accordance with ISO 7888 is saved in the device for temperature compensation in natural water.

Ultrapure water compensation (for conductive sensors)
Algorithms for pure and ultrapure water are stored in the device. These algorithms take the dissociation of the water and its temperature dependency into account. They are used for conductivity values up to approx. 100 µS/cm.

- UPW NaCl: Optimized for pH-neutral contamination.
- UPW HCl: Optimized for measuring the acid conductivity downstream of a cation exchanger. Also suitable for ammonia (NH_3) and caustic soda (NaOH).

User-defined tables
You can save a function that takes the properties of your specific process into account. To do so, determine the value pairs made up of the temperature T and conductivity κwith:
- $\kappa(T_0)$ for the reference temperature T_0
- $\kappa(T)$ for the temperatures that occur in the process

Use the following formula to calculate the αvalues for the temperatures that are relevant in your process:

$$\alpha = \frac{100\%}{\kappa(T_0)} \cdot \frac{\kappa(T) - \kappa(T_0)}{T - T_0}\ ;\ T \neq T_0$$

Values must be constantly increasing or decreasing.

Path: Menu/Setup/Inputs/Conductivity

Function	Options	Info
Temp. comp. mode *(Compensation=one of the user tables)*	Options ▪ Conductivity ▪ Coeff. Alpha **Factory setting** Conductivity	**Conductivity** You specify the temperature, conductivity and uncompensated conductivity. Recommended for large measuring ranges and small measured values. **Coeff. Alpha** As the value pairs, you specify an alpha value and the related temperature.
Table name *(Compensation=one of the user tables)*	Customized text, 16 characters	Assign a meaningful name to the selected table.
▶ Edit table *(Compensation=one of the user tables)*	▪ Temperature ▪ Conductivity ▪ Temperature comp. cond. or ▪ Temperature ▪ Coefficient alpha	Maximum number of rows: 25 The type of table depends on the option under "Temp. comp. mode".

6.2 Extended setup

6.2.1 Temperature format

Path: Menu/Setup/Inputs/<Sensor type>/Extended setup

Function	Options	Info
Temperature format	Options ▪ #.# ▪ #.## **Factory setting** #.#	Select how many decimal places should be used to display the temperature.

6.2.2 Cleaning

--> "Inputs: General/Frequently occurring functions" section → 📄 21

6.2.3 Diagnostics settings

This menu branch is used for specifying warning limits, and for defining whether and how diagnostics tools should be used.
The associated diagnostics code is displayed for every setting.

Process check system

--> "Inputs: General/Frequently occurring functions" section → 📄 21

Limits operating hours

The total operating time of the sensor and its use under extreme conditions is monitored. If the operating time exceeds the defined threshold values, the device issues a corresponding diagnostics message.

Each sensor has a limited life expectancy which heavily depends on the operating conditions. If you specify warning limits for operating times under extreme conditions, you can guarantee the operation of your measuring point without any downtime by performing maintenance tasks in time.

Path: Menu/Setup/Inputs/Conductivity/Extended setup/Diagnostics settings

Function	Options	Info
▶ Limits operating hours		
The range of adjustment for the operating hours alarm and warning limits is generally 1 to 50000 h.		
Function	Options ▪ On ▪ Off **Factory setting** Off	**On** The operation of the sensor under extreme conditions is monitored, recorded in the sensor and diagnostics messages are displayed on the controller. **Off** No diagnostics messages. However, the time the sensor operates under extreme conditions is recorded in the sensor and can be read in the sensor information in the diagnostics menu.
▶ Operating time		Total operating time of the sensor
Warning limit	**Factory setting** 10000 h	Diagnostics code and associated message text: 199 "Operating time"
▶ Operation > 80°C		
Warning limit	**Factory setting** 10000 h	Diagnostics code and associated message text: 193 "Operating time"
▶ Operation > 120°C		*Only conductive sensors*
Warning limit	**Factory setting** 10000 h	Diagnostics code and associated message text: 195 "Operating time"
▶ Operation > 125°C		*Only inductive sensors*
Warning limit	**Factory setting** 10000 h	Diagnostics code and associated message text: 196 "Operating time"
▶ Operation > 140°C		*Only conductive sensors*
Warning limit	**Factory setting** 10000 h	Diagnostics code and associated message text: 197 "Operating time"
▶ Operation > 150°C		*Only inductive sensors*
Warning limit	**Factory setting** 10000 h	Diagnostics code and associated message text: 198 "Operating time"

Path: Menu/Setup/Inputs/Conductivity/Extended setup/Diagnostics settings

Function	Options	Info
▶ Operation > 80°C < 100nS/cm		*Only conductive sensors*
Warning limit	**Factory setting** 10000 h	Diagnostics code and associated message text: 187 "Operating time"
▶ Operation < 5°C		*Only inductive sensors*
Warning limit	**Factory setting** 10000 h	Diagnostics code and associated message text: 188 "Operating time"

Sterilizations

--> "Inputs: General/Frequently occurring functions" section → 21

Diagnostic behavior

--> "Inputs: General/Frequently occurring functions" section → 21

Polarization detection (only conductive sensors)

As a result of flow through the electrolyte/electrode interface, reactions take place here which result in additional voltage. These polarization effects limit the measuring range of conductive sensors. Sensor-specific compensation increases the level of accuracy at the measuring range limits.

The controller recognizes the Memosens sensor and automatically uses suitable compensation. You can view the measuring range limits of the sensor under Diagnostics/Sensor information/Sensor specifications.

Path: Menu/Setup/Inputs/Conductivity/Extended setup/Diagnostics settings/Polarization detetected

Function	Options	Info
Polarization detetected	Options ▪ On ▪ Off **Factory setting** Off	Diagnostics code and associated message text: 168 "Polarization"

6.2.4 Pharmaceutical water

Here you can make settings for monitoring pharmaceutical water in accordance with the United States Pharmacopeia (USP) or European Pharmacopeia (EP).
The uncompensated conductivity value and the temperature are measured for the limit functions. The measured values are compared with the tables defined in the standards. If the limit is exceeded, an alarm is triggered. Furthermore, you can also set a preliminary alarm (warning limit) which signals undesired operating states before they occur.

Path: Menu/Setup/Inputs/Conductivity/Extended setup/Diagnostics settings/Pharmacy-water

Function	Options	Info
Function	Options ▪ Off ▪ EP ▪ USP **Factory setting** Off	The alarm values are stored in the device in accordance with USP or EP specifications. You define the warning limit as a % of the alarm value.
Warning limit	10.0 to 99.9 % **Factory setting** 80.0 %	Diagnostics code and associated message text: 915 "USP / EP warning" If the value exceeds the USP or EP alarm values saved in the software, diagnostics message 914 "USP/ EP alarm" is displayed.

6.2.5 Tag control

--> "Inputs: General/Frequently occurring functions" section → 21

6.2.6 Sensor replacement

--> "Inputs: General/Frequently occurring functions" section → 21

6.2.7 Data processing factory setting

--> "Inputs: General/Frequently occurring functions" section → 21

6.2.8 Sensor factory setting (only CLS50D)

--> "Inputs: General/Frequently occurring functions" section → 21

7 Inputs: Oxygen

7.1 Basic settings

7.1.1 Sensor identification

Path: Menu/Setup/Inputs/<Sensor type>

Function	Options	Info
Channel	Options ▪ On ▪ Off **Factory setting** On	**On** The channel display is switched on in the measuring mode **Off** The channel is not displayed in the measuring mode, regardless of whether a sensor is connected or not.
Sensor type	Read only (Only available if a sensor is connected)	Connected sensor type
Order code		Order code of the connected sensor

7.1.2 Main value

Path: Menu/Setup/Inputs/DO

Function	Options	Info
Main value	Options ▪ Concentration liquid ▪ Concentration gaseous ▪ Saturation ▪ Partial pressure ▪ Raw value nA (only Oxygen (amp.)) ▪ Raw value µs (only Oxygen (opt.)) **Factory setting** Concentration liquid	Decide how you want to display the main value. Other functions, such as the setting for the unit, depend on this setting.

7.1.3 Damping

--> "Inputs: General/Frequently occurring functions" section → 📄 21

7.1.4 Unit

Path: Menu/Setup/Inputs/DO

Function	Options	Info
Unit *Main value="Concentration liquid" or "Concentration gaseous"*	Options *(Main value="Concentration liquid")* ▪ mg/l ▪ µg/l ▪ ppm ▪ ppb Options *(Main value="Concentration gaseous")* ▪ %Vol ▪ ppmVol *(Main value="Concentration gaseous"* **Factory setting** mg/l %Vol	

7.1.5 Manual hold

--> "Inputs: General/Frequently occurring functions" section → 21

7.2 Extended setup

7.2.1 Temperature compensation (only amperometric sensors)

Path: Menu/Setup/Inputs/DO/Extended setup

Function	Options	Info
Temp. compensation	Options ▪ Automatic ▪ Manual **Factory setting** Automatic	Decide how you want to compensate the medium temperature: ▪ Automatically using the temperature sensor of your sensor This means that the temperature is always compensated based on the current temperature value. ▪ Manually by entering the medium temperature This means that the measured value is always compensated against the value entered, e.g. for inlet and outlet monitoring in a cooling facility.
Temperature *(Temp. compensation=Manual)*	0.0 to 80.0 °C (32.0 to 176.0 °F) **Factory setting** 20.0 °C (68 °F)	Enter the temperature of your medium, or another temperature which you want to use as a reference temperature.

7.2.2 Measured value formats

Path: Menu/Setup/Inputs/DO or Chlorine/Extended setup[1)]

Function	Options	Info
Main value format	Options ▪ #.# ▪ #.## ▪ #.### ▪ # **Factory setting** #.##	Specify the number of decimal places for displaying the main measured value.
Temperature format	Options ▪ #.# ▪ #.## **Factory setting** #.#	Select how many decimal places should be used to display the temperature.

1) In the case of chlorine, the sequence of the two menu functions is reversed

7.2.3 Medium compensation (in the process)

Path: Menu/Setup/Inputs/DO/Extended setup

Function	Options	Info
Medium pressure	Options ▪ Process pressure ▪ Air pressure ▪ Altitude **Factory setting** Air pressure	
Altitude *Medium pressure="Altitude"*	-300 to 4000 m **Factory setting** 0 m	Enter the altitude **or** the average air pressure (mutually dependent values). If you specify the altitude, the average air pressure is calculated from the barometric altitude formula and vice versa. If you are compensating using the process pressure, enter the pressure in your process here. The pressure is then independent of the altitude.
Air pressureorProcess pressure	*Medium pressure="Air pressure"* 500 to 1200 hPa *Medium pressure="Process pressure"* 500 to 9999 hPa **Factory setting** 1013 hPa	
Salinity	0 to 40 g/kg **Factory setting** 0 g/kg	The influence of salt content on oxygen measurement is compensated with this function. Example: sea water measurement as per Copenhagen Standard (30 g/kg).

7.2.4 Cleaning

Path: Menu/Setup/Inputs/<Sensor type>/Extended setup

Function	Options	Info
Cleaning	Options ▪ None ▪ Cleaning 1 ▪ Cleaning 2 ▪ Cleaning 3 ▪ Cleaning 4 **Factory setting** None	Select a cleaning program. This program is executed: ▪ In a specified interval To do so, the cleaning program must be started. ▪ If a diagnostic message is pending on the channel **and** a cleaning has been specified for this message (--> "Inputs/Diagnostics settings/Diag. behavior").

You define the cleaning programs in the "Setup/Additional functions/Cleaning" menu.

7.2.5 Calibration settings

Stability criteria

You define the permitted measured value fluctuation which must not be exceeded in a certain timeframe during calibration.
If the permitted difference is exceeded, calibration is not permitted and is aborted automatically.

Path: Menu/Setup/Inputs/Oxygen/Extended setup/Calib. settings

Function	Options	Info
▶ Stability criteria		
Delta signal	0.1 to 2.0 % **Factory setting** 0.2 %	Permitted measured value fluctuation during calibration. Referenced to the raw value in nA in the case of amperometric sensors, and referenced to the partial pressure in the case of optical sensors.
Delta temperature	0.10 to 2.00 K **Factory setting** 0.50 K	Permitted temperature fluctuation during calibration
Duration	5 to 60 s **Factory setting** 20 s	Timeframe within which the permitted range for measured value fluctuation should not be exceeded

Medium compensation (during calibration)

Path: Menu/Setup/Inputs/DO/Extended setup/Calib. settings

Function	Options	Info
Medium pressure	Options ▪ Process pressure ▪ Air pressure ▪ Altitude **Factory setting** Air pressure	
Altitude *Medium pressure="Altitude"*	-300 to 4000 m **Factory setting** 0 m	Enter the altitude **or** the average air pressure (mutually dependent values). If you specify the altitude, the average air pressure is calculated from the barometric altitude formula and vice versa. If you are compensating using the process pressure, enter the pressure in your process here. The pressure is then independent of the altitude.
Air pressureorProcess pressure	*Medium pressure="Air pressure"* 500 to 1200 hPa *Medium pressure="Process pressure"* 500 to 9999 hPa **Factory setting** 1013 hPa	
Rel. hum. (air variable)	0 to 100 % **Factory setting** 100 %	

Calibration timer and calibration expiration date

--> "Inputs: General/Frequently occurring functions" section → 21

7.2.6 Diagnostics settings

This menu branch is used for specifying warning limits, and for defining whether and how diagnostics tools should be used.
The associated diagnostics code is displayed for every setting.

Slope

The (relative) slope characterizes the sensor condition. Decreasing values indicate electrolyte exhaustion. You can control when the electrolyte should be replaced by specifying limit values and the diagnostics messages these limit values trigger.

Path: Menu/Setup/Inputs/DO/Extended setup/Diagnostics settings

Function	Options	Info
▶ Slope	0.0 to 200.0 %	Specify the limit values for slope monitoring in your sensor.
Upper warning limit	**Factory setting** 140.0 %	Diagnostics code and associated message text: 511 "Sensor calib."
Lower warning limit	**Factory setting** 60.0 %	Diagnostics code and associated message text: 509 "Sensor calib."

Delta slope (only amperometric sensors)

The device determines the difference in slope between the last calibration and the penultimate calibration, and issues a warning or an alarm depending on the setting configured. The difference is an indicator for the condition of the sensor. An increasing change indicates the formation of buildup on the sensor diaphragm or electrolyte contamination. Replace the diaphragm and electrolyte as specified in the instructions in the sensor operating manual.

Path: Menu/Setup/Inputs/DO/Extended setup/Diagnostics settings

Function	Options	Info
▶ Delta slope	0.0 to 50.0 %	Specify the limit values for monitoring the slope differential.
Function	Options ▪ On ▪ Off **Factory setting** On	
Warning limit	**Factory setting** 5.0 %	Diagnostics code and associated message text: 518 "Sensor calib."

Zero point (only amperometric sensors)

The zero point corresponds to the sensor signal that is measured in a medium in the absence of oxygen. You can calibrate the zero point in water that is free from oxygen or in high-purity nitrogen. This improves accuracy in the trace range.

Path: Menu/Setup/Inputs/DO/Extended setup/Diagnostics settings

Function	Options	Info
▶ Zero point	0.0 to 10.0 nA	Specify the limit values for zero point monitoring in your sensor.
Warning limit	**Factory setting** 3.0 nA	Diagnostics code and associated message text: 513 "Zero Warn"

Delta zero point (only amperometric sensors)

The device determines the difference between the last calibration and the penultimate calibration, and issues a warning or an alarm depending on the setting configured. The difference is an indicator for the condition of the sensor. Increasing differences indicate the formation of buildup on the cathode. Clean or replace the cathode as specified in the instructions in the sensor operating manual.

Path: Menu/Setup/Inputs/DO/Extended setup/Diagnostics settings

Function	Options	Info
▶ Delta zero point	0.0 to 10 nA	Specify your limit values for monitoring the zero point differential.
Function	Options ▪ On ▪ Off **Factory setting** Off	
Warning limit	**Factory setting** 1.0 nA	Diagnostics code and associated message text: 520 "Sensor calib."

Cap calibrations (only amperometric sensors)

The calibration counters in the sensor make a distinction between sensor calibrations and calibrations with the membrane cap currently used. If this cap is replaced, only the (cap) counter is reset.

Path: Menu/Setup/Inputs/DO/Extended setup/Diagnostics settings

Function	Options	Info
▶ Number of cap calibrations		Specify how many calibrations may be performed with a membrane cap before the cap has to be replaced. The number depends heavily on the process and must be determined individually.
Function	Options ▪ On ▪ Off **Factory setting** Off	
Warning limit	0 to 1000 **Factory setting** 6	Diagnostics code and associated message text: 535 "Sensor check"

Cap sterilizations (only sterilizable, amperometric sensors)

The sterilization counters in the sensor make a distinction between the sensor and the membrane cap currently used. If this cap is replaced, only the (cap) counter is reset.

Path: Menu/Setup/Inputs/DO/Extended setup/Diagnostics settings

Function	Options	Info
▶ Number of cap sterilizations		Specify how many sterilizations may be performed with a membrane cap before the cap has to be replaced. The number depends heavily on the process and must be determined individually.
Function	Options ▪ On ▪ Off **Factory setting** Off	
Warning limit	0 to 100 **Factory setting** 25	Diagnostics code and associated message text: 109 "Sterilizat. cap"

Sterilizations (only sterilizable sensors)

--> "Inputs: General/Frequently occurring functions" section → 21

Process check system

--> "Inputs: General/Frequently occurring functions" section → 21

Limits operating hours

The total operating time of the sensor and its use under extreme conditions is monitored. If the operating time exceeds the defined threshold values, the device issues a corresponding diagnostics message.

Each sensor has a limited life expectancy which heavily depends on the operating conditions. If you specify warning limits for operating times under extreme conditions, you can guarantee the operation of your measuring point without any downtime by performing maintenance tasks in time.

Path: Menu/Setup/Inputs/DO/Extended setup/Diagnostics settings

Function	Options	Info
▶ Limits operating hours		
The range of adjustment for the operating hours alarm and warning limits is generally 1 to 50000 h.		
Function	Options ▪ On ▪ Off **Factory setting** Off	**On** The operation of the sensor under extreme conditions is monitored, recorded in the sensor and diagnostics messages are displayed on the controller. **Off** No diagnostics messages. However, the time the sensor operates under extreme conditions is recorded in the sensor and can be read in the sensor information in the diagnostics menu.
▶ Operating time		Total operating time of the sensor
Warning limit	**Factory setting** 10000 h	Diagnostics code and associated message text: 199 "Operating time"
▶ Operation < 5°C		*Only optical sensors*
Warning limit	**Factory setting** 10000 h	Diagnostics code and associated message text: 188 "Operating time"
▶ Operation > 5°C		*only COS51D*
Warning limit	**Factory setting** 10000 h	Diagnostics code and associated message text: 189 "Operating time"
▶ Operation > 25°C		*Only optical sensors*
Warning limit	**Factory setting** 10000 h	Diagnostics code and associated message text: 190 "Operating time"
▶ Operation > 30°C		*only COS51D*
Warning limit	**Factory setting** 10000 h	Diagnostics code and associated message text: 191 "Operating time"
▶ Operation > 40°C		*only COS22D, COS61D*
Warning limit	**Factory setting** 10000 h	Diagnostics code and associated message text: 192 "Operating time"

Path: Menu/Setup/Inputs/DO/Extended setup/Diagnostics settings

Function	Options	Info
▶ Operation > 80°C		*only COS22D*
Warning limit	**Factory setting** 10000 h	Diagnostics code and associated message text: 193 "Operating time"
▶ (Operation above first specified nA value)		*Only amperometric sensors, sensor-specific limit* – *COS22D: >15 nA* – *COS51D: >30 nA*
Warning limit	**Factory setting** 10000 h	Diagnostics code and associated message text: 183 "Operating time" (COS22D) 184 "Operating time" (COS51D)
▶ (Operation above second specified nA value)		*Only amperometric sensors, sensor-specific limit* – *COS22D: >50 nA* – *COS51D: >160 nA*
Warning limit	**Factory setting** 10000 h	Diagnostics code and associated message text: 185 "Operating time" (COS22D) 186 "Operating time" (COS51D)
▶ Operation < 25 µs		*Only optical sensors (µS = fluorescence decay time, raw value of optical measurement)*
Warning limit	**Factory setting** 10000 h	Diagnostics code and associated message text: 181 "Operating time"
▶ Operation > 40 µs		*Only optical sensors*
Warning limit	**Factory setting** 10000 h	Diagnostics code and associated message text: 182 "Operating time"

Diagnostic behavior

--> "Inputs: General/Frequently occurring functions" section → 21

7.2.7 Tag control

--> "Inputs: General/Frequently occurring functions" section → 21

7.2.8 Sensor replacement

--> "Inputs: General/Frequently occurring functions" section → 21

7.2.9 Data processing factory setting

--> "Inputs: General/Frequently occurring functions" section → 21

7.2.10 Sensor factory setting (only COS61D)

--> "Inputs: General/Frequently occurring functions" section → 21

8 Inputs: Chlorine

8.1 Basic settings

8.1.1 Sensor identification

Path: Menu/Setup/Inputs/<Sensor type>

Function	Options	Info
Channel	Options ▪ On ▪ Off **Factory setting** On	**On** The channel display is switched on in the measuring mode **Off** The channel is not displayed in the measuring mode, regardless of whether a sensor is connected or not.
Sensor type	Read only (Only available if a sensor is connected)	Connected sensor type
Order code		Order code of the connected sensor

8.1.2 Main value

Path: Menu/Setup/Inputs/Chlorine

Function	Options	Info
Main value	Options ▪ Concentration ▪ Sensor current (nA) **Factory setting** Concentration	Decide how you want to display the main value.

8.1.3 Damping

--> "Inputs: General/Frequently occurring functions" section → 📄 21

8.1.4 Manual hold

--> "Inputs: General/Frequently occurring functions" section → 📄 21

8.1.5 Unit

Path: Menu/Setup/Inputs/Chlorine

Function	Options	Info
Unit *Main value="Concentration liquid"*	Options ▪ mg/l ▪ µg/l ▪ ppm ▪ ppb **Factory setting** mg/l	

8.2 Extended setup

8.2.1 Measured value formats

Path: Menu/Setup/Inputs/DO or Chlorine/Extended setup[1)]

Function	Options	Info
Main value format	Options ▪ #.# ▪ #.## ▪ #.### ▪ # **Factory setting** #.##	Specify the number of decimal places for displaying the main measured value.
Temperature format	Options ▪ #.# ▪ #.## **Factory setting** #.#	Select how many decimal places should be used to display the temperature.

1) In the case of chlorine, the sequence of the two menu functions is reversed

8.2.2 Medium compensation (in the process)

Path: Menu/Setup/Inputs/Chlorine/Extended setup

Function	Options	Info
Medium comp. (pH)	Options ▪ Off ▪ On **Factory setting** On	**Off** The concentration measured value is calculated as HClO (=free available chlorine). **On** The pH value is used to calculate a cumulative concentration value from HClO and ClO^- (=total chlorine).
Mode *Medium comp. (pH)="On"*	Options ▪ Fixed value ▪ Measured value **Factory setting** Fixed value	Decide whether you want to specify a fixed pH value for calculating the total chlorine or whether the measured value of a pH sensor attached to another input should be used.
Fixed pH *Mode="Fixed value"*	4.00 to 9.00 pH **Factory setting** 7.20 pH	Useful for media with a constant pH value Enter the pH value of your medium which you determined with a reference measurement.
Associated pH-sensor *Mode="Measured value"*	Select the pH sensor **Factory setting** None	Preferred method for media with varying pH values Select the sensor input with the connected pH sensor. The measured value of the sensor is then continuously used to calculate the total chlorine.
Temp. compensation	Options ▪ Off ▪ Automatic ▪ Manual **Factory setting** Automatic	Decide whether and how you want to compensate the medium temperature: ▪ No compensation ▪ Automatically using the temperature sensor of your sensor ▪ Manually by entering the medium temperature
Medium temperature *(Temp. compensation=Manual)*	-5.0 to 50.0 °C (23.0 to 122.0 °F) **Factory setting** 20.0 °C (68 °F)	Enter the temperature of your medium.

8.2.3 Cleaning

--> "Inputs: General/Frequently occurring functions" section → 21

8.2.4 Calibration settings

Calibration timer and calibration expiration date

--> "Inputs: General/Frequently occurring functions" section → 21

Stability criteria

You define the permitted measured value fluctuation which must not be exceeded in a certain timeframe during calibration.
If the permitted difference is exceeded, calibration is not permitted and is aborted automatically.

Path: Menu/Setup/Inputs/Chlorine/Extended setup/Calib. settings

Function	Options	Info
▶ Stability criteria		
Delta signal	0.1 to 5.0 % **Factory setting** 1 %	Permitted measured value fluctuation during calibration. (With reference to the raw value in nA)
Delta temperature	0.10 to 2.00 K **Factory setting** 0.50 K	Permitted temperature fluctuation during calibration
Duration	5 to 100 s **Factory setting** 20 s	Timeframe within which the permitted range for measured value fluctuation should not be exceeded

8.2.5 Diagnostics settings

This menu branch is used for specifying warning limits, and for defining whether and how diagnostics tools should be used.
The associated diagnostics code is displayed for every setting.

Slope

The (relative) slope characterizes the sensor condition. Decreasing values indicate electrolyte exhaustion. You can control when the electrolyte should be replaced by specifying limit values and the diagnostics messages these limit values trigger.

Path: Menu/Setup/Inputs/Chlorine/Extended setup/Diagnostics settings

Function	Options	Info
▶ Slope	3.0 to 500.0 %	Specify the limit values for slope monitoring in your sensor.
Upper warning limit	**Factory setting** 200.0 %	Diagnostics code and associated message text: 511 "Sensor calib."
Lower warning limit	**Factory setting** 25.0 %	Diagnostics code and associated message text: 509 "Sensor calib."

Delta slope

The device determines the difference in slope between the last calibration and the penultimate calibration, and issues a warning or an alarm depending on the setting configured. The difference is an indicator for the condition of the sensor. An increasing change indicates the formation of buildup on the sensor diaphragm or electrolyte contamination. Replace the diaphragm and electrolyte as specified in the instructions in the sensor operating manual.

Path: Menu/Setup/Inputs/Chlorine/Extended setup/Diagnostics settings

Function	Options	Info
▶ Delta slope	1 to 15 %	Specify the limit values for monitoring the slope differential.
Function	Options ▪ On ▪ Off **Factory setting** Off	
Warning limit	**Factory setting** 5 %	Diagnostics code and associated message text: 518 "Sensor calib."

Zero point

The zero point corresponds to the sensor signal that is measured in a medium in the absence of chlorine. You can calibrate the zero point in water that is free from chlorine. This improves accuracy in the trace range.

Path: Menu/Setup/Inputs/Chlorine/Extended setup/Diagnostics settings

Function	Options	Info
▶ Zero point	0.0 to 3.2 nA	Specify the limit values for zero point monitoring in your sensor.
Warning limit	**Factory setting** 2.0 nA	Diagnostics code and associated message text: 513 "Zero Warn"

Delta zero point

The device determines the difference between the last calibration and the penultimate calibration, and issues a warning or an alarm depending on the setting configured. The difference is an indicator for the condition of the sensor. Increasing differences indicate the formation of buildup on the cathode. Clean the cathode as specified in the instructions in the sensor operating manual.

Path: Menu/Setup/Inputs/Chlorine/Extended setup/Diagnostics settings

Function	Options	Info
▶ Delta zero point	0.0 to 3.2 nA	Specify your limit values for monitoring the zero point differential.
Function	Options ▪ On ▪ Off **Factory setting** On	
Warning limit	**Factory setting** 1.0 nA	Diagnostics code and associated message text: 520 "Sensor calib."

Number of cap calibrations

Path: Menu/Setup/Inputs/Chlorine/Extended setup/Diagnostics settings

Function	Options	Info
▶ Number of cap calibrations		Specify how many calibrations may be performed with a membrane cap before the cap has to be replaced. The number depends heavily on the process and must be determined individually.
Function	Options ▪ On ▪ Off **Factory setting** Off	
Warning limit	1 to 20 **Factory setting** 6	Diagnostics code and associated message text: 535 "Sensor check"

Process check system

--> "Inputs: General/Frequently occurring functions" section → 21

Limits operating hours

The total operating time of the sensor and its use under extreme conditions is monitored. If the operating time exceeds the defined threshold values, the device issues a corresponding diagnostics message.

Each sensor has a limited life expectancy which heavily depends on the operating conditions. If you specify warning limits for operating times under extreme conditions, you can guarantee the operation of your measuring point without any downtime by performing maintenance tasks in time.

Path: Menu/Setup/Inputs/Chlorine/Extended setup/Diagnostics settings

Function	Options	Info
▶ Limits operating hours		
The range of adjustment for the operating hours alarm and warning limits is generally 1 to 100000 h.		
Function	Options ▪ On ▪ Off **Factory setting** Off	**On** The operation of the sensor under extreme conditions is monitored, recorded in the sensor and diagnostics messages are displayed on the controller. **Off** No diagnostics messages. However, the time the sensor operates under extreme conditions is recorded in the sensor and can be read in the sensor information in the diagnostics menu.

Path: Menu/Setup/Inputs/Chlorine/Extended setup/Diagnostics settings

Function	Options	Info
▶ Operating time		Total operating time of the sensor
Warning limit	**Factory setting** 10000 h	Diagnostics code and associated message text: 199 "Operating time"
▶ Operation > 15°C		
Warning limit	**Factory setting** 10000 h	Diagnostics code and associated message text: 178 "Operating time"
▶ Operation > 30°C		
Warning limit	**Factory setting** 10000 h	Diagnostics code and associated message text: 191 "Operating time"
▶ Operation > 20 nA		
Warning limit	**Factory setting** 10000 h	Diagnostics code and associated message text: 177 "Operating time"
▶ Operation > 100 nA		
Warning limit	**Factory setting** 10000 h	Diagnostics code and associated message text: 176 "Operating time"

Electrolyte counter

The electrolyte consumption is calculated on the basis of the amount of charge that penetrates the sensor diaphragm.

The following applies for the sensor CCS142D:
Half the chloride would be consumed and the entire dihydrogen phosphate would be converted to monohydrogen phosphate in an electrolyte filling (4 ml) at 20 000 000 µAs (=20 As). This would render the electrolyte and the sensor unusable.

With a view to predictive maintenance, you should replace the electrolyte at 10 000 000 µAs, and preferably at 5 000 000 µAs. 25%-50% of the dihydrogen phosphate is then consumed. The calculation presumes that the buffer of the electrolyte is only changed by the electrochemical conversion of hypochlorous acid. It does not take into account the penetration of acids or bases into the sensor.
Depending on the application it can be necessary to change the electrolyte before a charge of 5 As is reached.

Path: Menu/Setup/Inputs/Chlorine/Extended setup/Diagnostics settings

Function	Options	Info
▶ Electrolyte counter	0 to 2000000 µAs	
Function	Options ▪ On ▪ Off **Factory setting** On	
Warning limit	**Factory setting** 1000000 µAs	Diagnostics code and associated message text: 534 "Sensor calib."

Diagnostic behavior

--> "Inputs: General/Frequently occurring functions" section → 📄 21

8.2.6 Tag control

--> "Inputs: General/Frequently occurring functions" section → 📄 21

8.2.7 Sensor replacement

--> "Inputs: General/Frequently occurring functions" section → 📄 21

8.2.8 Data processing factory setting

--> "Inputs: General/Frequently occurring functions" section → 📄 21

9 Inputs: Turbidity and solids

9.1 Basic settings

9.1.1 Sensor identification

Path: Menu/Setup/Inputs/<Sensor type>

Function	Options	Info
Channel	Options ▪ On ▪ Off **Factory setting** On	**On** The channel display is switched on in the measuring mode **Off** The channel is not displayed in the measuring mode, regardless of whether a sensor is connected or not.
Sensor type	Read only (Only available if a sensor is connected)	Connected sensor type
Order code		Order code of the connected sensor

9.1.2 Application

The sensor is precalibrated on leaving the factory. As such, it can be used in a wide range of applications (e.g. clear water measurement) without the need for additional calibration. The factory calibration is based on a three-point calibration of a reference sample.
The factory calibration cannot be deleted and can be retrieved at any time. All other calibrations -
performed as customer calibrations - are referenced to this factory calibration.

Calibration data records are saved under an individual name. You can add your own data records during each calibration. These are then available for selection under "Application".

Path: Menu/Setup/Inputs/Turbidity

Function	Options	Info
Application type	Options ▪ Clear water ▪ Solid **Factory setting** Clear water	Preselection for saved calibration data records
Application	Depends on the sensor	Select a saved calibration data record

9.1.3 Damping

--> "Inputs: General/Frequently occurring functions" section → 21

9.1.4 Manual hold

--> "Inputs: General/Frequently occurring functions" section → 21

9.2 Extended setup

9.2.1 Measured value formats

Path: Menu/Setup/Inputs/Turbidity/Extended setup

Function	Options	Info
Temperature format	Options ■ #.# ■ #.## **Factory setting** #.#	Select how many decimal places should be used to display the temperature.
Main value format	Options ■ #.# ■ #.## ■ #.### ■ # **Factory setting** #.#	Specify the number of decimal places for the main value.
Unit	Options Application="Formacine" ■ FNU ■ NTU Options All apart from "Formacine" ■ g/l ■ ppm ■ %TS **Factory setting** FNU g/l	Select the unit for the main measured value.

9.2.2 Cleaning

--> "Inputs: General/Frequently occurring functions" section → 21

9.2.3 Calibration settings

Calibration timer and calibration expiration date

--> "Inputs: General/Frequently occurring functions" section → 21

Stability criteria

You define the permitted measured value fluctuation which must not be exceeded in a certain timeframe during calibration.
If the permitted difference is exceeded, calibration is not permitted and is aborted automatically.

Path: Menu/Setup/Inputs/Turbidity/Extended setup/Calib. settings

Function	Options	Info
▶ Stability criteria		
Delta turbidity	0.1 to 5.0 % **Factory setting** 2.0 %	Permitted measured value fluctuation during calibration
Delta temperature	0.10 to 2.00 K **Factory setting** 0.50 K	Permitted temperature fluctuation during calibration
Duration	0 to 100 s **Factory setting** 20 s	Timeframe within which the permitted range for measured value fluctuation should not be exceeded

9.2.4 Diagnostics settings

This menu branch is used for specifying warning limits, and for defining whether and how diagnostics tools should be used.
The associated diagnostics code is displayed for every setting.

Limits operating hours

The total operating time of the sensor and its use under extreme conditions is monitored. If the operating time exceeds the defined threshold values, the device issues a corresponding diagnostics message.

Each sensor has a limited life expectancy which heavily depends on the operating conditions. If you specify warning limits for operating times under extreme conditions, you can guarantee the operation of your measuring point without any downtime by performing maintenance tasks in time.

Path: Menu/Setup/Inputs/Turbidity/Extended setup/Diagnostics settings

Function	Options	Info
▶ Limits operating hours		Specify your limit values for monitoring the number of operating hours under extreme conditions.
The range of adjustment for the operating hours alarm and warning limits is generally 1 to 50000 h.		
Function	Options ▪ On ▪ Off **Factory setting** Off	**On** The operation of the sensor under extreme conditions is monitored, recorded in the sensor and diagnostics messages are displayed on the controller. **Off** No diagnostics messages. However, the time the sensor operates under extreme conditions is recorded in the sensor and can be read in the sensor information in the diagnostics menu.
▶ Operating time		Total operating time of the sensor
Warning limit	**Factory setting** 10000 h	Diagnostics code and associated message text: 199 "Operating time"
The names of the subsequent menu functions in brackets depend on the sensor specification. For this reason, they cannot be specified here.		
▶ (Operation below specified temperature limit, e.g. < -5 °C)		
Warning limit	**Factory setting** 10000 h	Diagnostics code and associated message text: 935 "Process temp."
▶ (Operation above specified temperature limit, e.g. > 55 °C)		
Warning limit	**Factory setting** 10000 h	Diagnostics code and associated message text: 934 "Process temp."
▶ (Operation below specified limit value, e.g. < 0 FNU)		
Warning limit	**Factory setting** 10000 h	Diagnostics code and associated message text: 943 "Process value"
▶ (Operation above specified limit value, e.g. > 10000 FNU)		
Warning limit	**Factory setting** 10000 h	Diagnostics code and associated message text: 942 "Process value"

Process check system

--> "Inputs: General/Frequently occurring functions" section → 21

Sensor operating hours

The data displayed here are the current hours the device has been in operation under extreme conditions. You cannot make any changes. You can only read the values.
The same data can be found in the Diagnostics menu.

Diagnostic behavior

--> "Inputs: General/Frequently occurring functions" section → 21

9.2.5 Tag control

--> "Inputs: General/Frequently occurring functions" section → 21

9.2.6 Sensor replacement

--> "Inputs: General/Frequently occurring functions" section → 21

9.2.7 Data processing factory setting

--> "Inputs: General/Frequently occurring functions" section → 21

9.2.8 Sensor factory setting

--> "Inputs: General/Frequently occurring functions" section → 21

10 Inputs: SAC

10.1 Basic settings

10.1.1 Sensor identification

Path: Menu/Setup/Inputs/<Sensor type>

Function	Options	Info
Channel	Options ▪ On ▪ Off **Factory setting** On	**On** The channel display is switched on in the measuring mode **Off** The channel is not displayed in the measuring mode, regardless of whether a sensor is connected or not.
Sensor type	Read only (Only available if a sensor is connected)	Connected sensor type
Order code		Order code of the connected sensor

10.1.2 Application

Calibration data records are saved under an individual name in the sensor. A new sensor is calibrated at the factory and thus already has appropriate data records. You can add your own data records during each calibration. These are then available for selection under "Application".

Path: Menu/Setup/Inputs/SAC

Function	Options	Info
Basic application	Options ▪ SAC ▪ Transm. ▪ Absorption ▪ COD ▪ TOC ▪ DOC ▪ BOD **Factory setting** SAC	Preselection for saved calibration data records
Application	Options ▪ Factory calib. ▪ 5 other data records **Factory setting** Factory calib.	Select a saved calibration data record

10.1.3 Damping

--> "Inputs: General/Frequently occurring functions" section → 21

10.1.4 Manual hold

--> "Inputs: General/Frequently occurring functions" section → 21

10.2 Extended setup

10.2.1 Measured value formats

Path: Menu/Setup/Inputs/SAC/Extended setup

Function	Options	Info
Temperature format	Options ▪ #.# ▪ #.## **Factory setting** #.#	Select how many decimal places should be used to display the temperature.
Main value format	Options ▪ #.# ▪ #.## ▪ #.### ▪ # **Factory setting** #.#	Specify the number of decimal places for the main value.
Unit	Options ▪ None ▪ % ▪ mg/l ▪ ppm ▪ 1/m **Factory setting** Depends on "Basic application"	The unit of the main value depends on the basic application selected. Depending on this setting only certain units are available for selection.

10.2.2 Cleaning

--> "Inputs: General/Frequently occurring functions" section → 21

10.2.3 Calibration settings

Calibration timer and calibration expiration date

--> "Inputs: General/Frequently occurring functions" section → 21

Stability criteria

You define the permitted measured value fluctuation which must not be exceeded in a certain timeframe during calibration.
If the permitted difference is exceeded, calibration is not permitted and is aborted automatically.

Path: Menu/Setup/Inputs/SAC/Extended setup/Calib. settings

Function	Options	Info
▶ Stability criteria		
Delta SAC	0.1 to 5.0 % **Factory setting** 2.0 %	Permitted measured value fluctuation during calibration
Delta temperature	0.10 to 2.00 K **Factory setting** 0.50 K	Permitted temperature fluctuation during calibration
Duration	0 to 100 s **Factory setting** 10 s	Timeframe within which the permitted range for measured value fluctuation should not be exceeded

10.2.4 Diagnostics settings

This menu branch is used for specifying warning limits, and for defining whether and how diagnostics tools should be used.
The associated diagnostics code is displayed for every setting.

Limits operating hours

The total operating time of the sensor and its use under extreme conditions is monitored. If the operating time exceeds the defined threshold values, the device issues a corresponding diagnostics message.

Each sensor has a limited life expectancy which heavily depends on the operating conditions. If you specify warning limits for operating times under extreme conditions, you can guarantee the operation of your measuring point without any downtime by performing maintenance tasks in time.

Path: Menu/Setup/Inputs/SAC/Extended setup/Diagnostics settings

Function	Options	Info
▶ Limits operating hours		Specify your limit values for monitoring the number of operating hours under extreme conditions.
The range of adjustment for the operating hours alarm and warning limits is generally 1 to 50000 h.		
Function	Options ▪ On ▪ Off **Factory setting** Off	**On** The operation of the sensor under extreme conditions is monitored, recorded in the sensor and diagnostics messages are displayed on the controller. **Off** No diagnostics messages. However, the time the sensor operates under extreme conditions is recorded in the sensor and can be read in the sensor information in the diagnostics menu.
▶ Operating time		Total operating time of the sensor
Warning limit	**Factory setting** 10000 h	Diagnostics code and associated message text: 199 "Operating time"
The names of the menu functions in brackets depend on the sensor specification. For this reason, they cannot be specified here.		
▶ (Operation below specified temperature limit, e.g. < 5 °C)		
Warning limit	**Factory setting** 10000 h	Diagnostics code and associated message text: 935 "Process temp."
▶ (Operation above specified temperature limit, e.g. > 50 °C)		
Warning limit	**Factory setting** 10000 h	Diagnostics code and associated message text: 934 "Process temp."
▶ (Operation below specified limit value, e.g. < 50 mg/l)		
Warning limit	**Factory setting** 10000 h	Diagnostics code and associated message text: 170 "Process value"
▶ (Operation above specified limit value, e.g. > 200 mg/l)		
Warning limit	**Factory setting** 10000 h	Diagnostics code and associated message text: 169 "Process value"

Path: Menu/Setup/Inputs/SAC/Extended setup/Diagnostics settings

Function	Options	Info
▶ Filter change		
Warning limit	**Factory setting** 10000 h	Diagnostics code and associated message text: 157 "Filter change"
Alarm limit	**Factory setting** 15000 h	Diagnostics code and associated message text: 161 "Filter change"
▶ Lamp life		
Warning limit	**Factory setting** 35040 h	Diagnostics code and associated message text: 171 "Lamp change"
Alarm limit	**Factory setting** 36500 h	Diagnostics code and associated message text: 71 "Lamp change"

Process check system

--> "Inputs: General/Frequently occurring functions" section → 📄 21

Sensor operating hours

The data displayed here are the current hours the device has been in operation under extreme conditions. You cannot make any changes. You can only read the values.
The same data can be found in the Diagnostics menu.

Diagnostic behavior

--> "Inputs: General/Frequently occurring functions" section → 📄 21

10.2.5 Tag control

--> "Inputs: General/Frequently occurring functions" section → 📄 21

10.2.6 Sensor replacement

--> "Inputs: General/Frequently occurring functions" section → 📄 21

10.2.7 Data processing factory setting

--> "Inputs: General/Frequently occurring functions" section → 📄 21

10.2.8 Sensor factory setting

--> "Inputs: General/Frequently occurring functions" section → 📄 21

11 Inputs: Nitrate

11.1 Basic settings

11.1.1 Sensor identification

Path: Menu/Setup/Inputs/<Sensor type>

Function	Options	Info
Channel	Options ▪ On ▪ Off **Factory setting** On	**On** The channel display is switched on in the measuring mode **Off** The channel is not displayed in the measuring mode, regardless of whether a sensor is connected or not.
Sensor type	Read only (Only available if a sensor is connected)	Connected sensor type
Order code		Order code of the connected sensor

11.1.2 Application

Calibration data records are saved under an individual name in the nitrate sensor. A new sensor is calibrated at the factory and always has a corresponding data record. You can add additional data records during each calibration. These are then available for selection under "Application".

Path: Menu/Setup/Inputs/Nitrate

Function	Options	Info
Application	Depends on the sensor	Select a saved calibration data record

11.1.3 Damping

--> "Inputs: General/Frequently occurring functions" section → 21

11.1.4 Manual hold

--> "Inputs: General/Frequently occurring functions" section → 21

11.2 Extended setup

11.2.1 Measured value formats

Path: Menu/Setup/Inputs/Nitrate/Extended setup

Function	Options	Info
Temperature format	Options ■ #.# ■ #.## **Factory setting** #.#	Select how many decimal places should be used to display the temperature.
Main value format	Options ■ #.# ■ #.## ■ #.### ■ # **Factory setting** #.#	Specify the number of decimal places.
Unit	Options ■ mg/l NO3-N ■ mg/l NO3 ■ ppm NO3-N ■ ppm NO3 **Factory setting** mg/l NO3-N	Select the unit for the main measured value.

11.2.2 Cleaning

--> "Inputs: General/Frequently occurring functions" section → 21

11.2.3 Calibration settings

Calibration timer and calibration expiration date

--> "Inputs: General/Frequently occurring functions" section → 21

Stability criteria

You define the permitted measured value fluctuation which must not be exceeded in a certain timeframe during calibration.
If the permitted difference is exceeded, calibration is not permitted and is aborted automatically.

Path: Menu/Setup/Inputs/Nitrate/Extended setup/Calib. settings

Function	Options	Info
▶ Stability criteria		
Delta nitrate	0.1 to 5.0 % **Factory setting** 2.0 %	Permitted measured value fluctuation during calibration
Delta temperature	0.10 to 2.00 °C 0.18 to 3.60 °F **Factory setting** 0.50 °C 0.90 °F	Permitted temperature fluctuation during calibration
Duration	0 to 100 s **Factory setting** 10 s	Timeframe within which the permitted range for measured value fluctuation should not be exceeded

11.2.4 Diagnostics settings

This menu branch is used for specifying warning limits, and for defining whether and how diagnostics tools should be used.
The associated diagnostics code is displayed for every setting.

Limits operating hours

The total operating time of the sensor and its use under extreme conditions is monitored. If the operating time exceeds the defined threshold values, the device issues a corresponding diagnostics message.

Each sensor has a limited life expectancy which heavily depends on the operating conditions. If you specify warning limits for operating times under extreme conditions, you can guarantee the operation of your measuring point without any downtime by performing maintenance tasks in time.

Path: Menu/Setup/Inputs/Nitrate/Extended setup/Diagnostics settings

Function	Options	Info
▶ Limits operating hours		Specify your limit values for monitoring the number of operating hours under extreme conditions.
The range of adjustment for the operating hours alarm and warning limits is generally 1 to 50000 h.		
Function	Options ▪ On ▪ Off **Factory setting** Off	**On** The operation of the sensor under extreme conditions is monitored, recorded in the sensor and diagnostics messages are displayed on the controller. **Off** No diagnostics messages. However, the time the sensor operates under extreme conditions is recorded in the sensor and can be read in the sensor information in the diagnostics menu.
▶ Operating time		Total operating time of the sensor
Warning limit	**Factory setting** 10000 h	Diagnostics code and associated message text: 199 "Operating time"
The names of the menu functions in brackets depend on the sensor specification. For this reason, they cannot be specified here.		
▶ (Operation below specified temperature limit, e.g. < 5 °C)		
Warning limit	**Factory setting** 10000 h	Diagnostics code and associated message text: 935 "Process temp."
▶ (Operation above specified temperature limit, e.g. > 50 °C)		
Warning limit	**Factory setting** 10000 h	Diagnostics code and associated message text: 934 "Process temp."
▶ (Operation below specified limit value, e.g. < 50 mg/l)		
Warning limit	**Factory setting** 10000 h	Diagnostics code and associated message text: 943 "Process value"
▶ (Operation above specified limit value, e.g. > 200 mg/l)		
Warning limit	**Factory setting** 10000 h	Diagnostics code and associated message text: 942 "Process value"

Path: Menu/Setup/Inputs/Nitrate/Extended setup/Diagnostics settings

Function	Options	Info
▶ Filter change		
Warning limit	**Factory setting** 10000 h	Diagnostics code and associated message text: 157 "Filter change"
Alarm limit	**Factory setting** 15000 h	Diagnostics code and associated message text: 161 "Filter change"
▶ Lamp life		
Warning limit	**Factory setting** 35000 h	Diagnostics code and associated message text: 171 "Lamp change"
Alarm limit	**Factory setting** 36500 h	Diagnostics code and associated message text: 71 "Lamp change"

Process check system

--> "Inputs: General/Frequently occurring functions" section → 21

Sensor operating hours

The data displayed here are the current hours the device has been in operation under extreme conditions. You cannot make any changes. You can only read the values.
The same data can be found in the Diagnostics menu.

Diagnostic behavior

--> "Inputs: General/Frequently occurring functions" section → 21

11.2.5 Tag control

--> "Inputs: General/Frequently occurring functions" section → 21

11.2.6 Sensor replacement

--> "Inputs: General/Frequently occurring functions" section → 21

11.2.7 Data processing factory setting

--> "Inputs: General/Frequently occurring functions" section → 21

11.2.8 Sensor factory setting

--> "Inputs: General/Frequently occurring functions" section → 21

12 Inputs: ISE

12.1 Basic settings

12.1.1 Sensor identification

Path: Menu/Setup/Inputs/<Sensor type>

Function	Options	Info
Channel	Options ▪ On ▪ Off **Factory setting** On	**On** The channel display is switched on in the measuring mode **Off** The channel is not displayed in the measuring mode, regardless of whether a sensor is connected or not.
Sensor type	Read only (Only available if a sensor is connected)	Connected sensor type
Order code		Order code of the connected sensor

12.1.2 Main value

The main value can be any parameter which is returned by one of the electrodes in the ISE-sensor.

Path: Menu/Setup/Inputs/ISE

Function	Options	Info
Main value	Options ▪ Ammonium ▪ Nitrate ▪ Potassium ▪ Chloride ▪ pH ▪ ORP **Factory setting** pH	Decide which parameter you want to display as the main value for the ISE channel. Here, you can only choose from the electrodes which you configured via the electrode slot menus. At the factory, this is equivalent to the types of electrode that are actually installed in the ISE sensor.

12.1.3 Damping of the temperature value

The damping causes a floating average curve of the measured values over the time specified.

Path: Menu/Setup/Inputs/ISE

Function	Options	Info
Damping temp.	0 to 300 s **Factory setting** 0 s	Specify the damping for the temperature measurement.

12.1.4 Manual hold

--> "Inputs: General/Frequently occurring functions" section → 21

12.2 Extended setup

12.2.1 Temperature format

Path: Menu/Setup/Inputs/<Sensor type>/Extended setup

Function	Options	Info
Temperature format	Options ■ #.# ■ #.## **Factory setting** #.#	Select how many decimal places should be used to display the temperature.

12.2.2 Cleaning

--> "Inputs: General/Frequently occurring functions" section → 21

12.2.3 Diagnostic behavior

--> "Inputs: General/Frequently occurring functions" section → 21

12.2.4 Tag control

--> "Inputs: General/Frequently occurring functions" section → 21

12.2.5 Sensor replacement

--> "Inputs: General/Frequently occurring functions" section → 21

12.2.6 Data processing factory setting

--> "Inputs: General/Frequently occurring functions" section → 21

12.3 Electrode slot menus

12.3.1 Electrode slot

A CAS40D sensor has 4 electrode slots in total. Consequently, each of these slots has its own menu.

Make settings:

- ▶ Define the parameter for the slot (only slots 2-4).
  The 1st slot is always designated to the pH electrode. It is not possible to select another parameter for this slot.
- ▶ You can complete and assign the other 3 slots as you prefer.
- ▶ Specify the measured variable that should be output. No options can be selected for pH which is why the "Measured variable" function is not available for this parameter.

Options displayed for "Measured variable" with the following parameters:				
pH	**Ammonium**	**Nitrate**	**Potassium**	**Chloride**
-	▪ NH4-N ▪ NH4	▪ NO3-N ▪ NO3	▪ K	▪ Cl

NOTICE

Incorrect assignment between the electrode (hardware) and the software menu

Unreliable measured values and faults in the measuring point can occur

- ▶ When assigning the slot in the software, make sure it matches the assignment in the sensor.
- ▶ Example: You have connected the ammonium electrode to cable no. 2 in the sensor. Then configure the ammonium parameter in the "Slot 2:1 (ISE)" software menu.

12.3.2 Damping

The damping causes a floating average curve of the measured values over the time specified.

Path: Menu/Setup/Inputs/ISE/Electrode slot

Function	Options	Info
Damping	0 to 600 s **Factory setting** 0 s	Specify the damping of the main value of the electrode assigned to the slot.

12.3.3 Compensation

Depending on the selectivity of the ion-selective electrode vis-à-vis other ions (interference ions), and the concentration of these ions, such ions could also be interpreted as part of the measuring signal and thus cause measuring errors.
When measuring in wastewater, the potassium ion - which is chemically similar to the ammonium ion - can cause higher measured values.
The measured values for nitrate can be too high due to high concentrations of chloride.
To reduce measuring errors resulting from such cross-interference, the concentration of the potassium or chloride interference ion can be measured and compensated for with a suitable additional electrode.

For the pH, chloride and the potassium electrode, you can only configure an offset. The settings for compensation of the effect of interference ions are available only for ammonium and nitrate.

Path: Menu/Setup/Inputs/ISE/Electrode slot/Compensation

Function	Options	Info
Compensation	Options ▪ Off ▪ On **Factory setting** Off	If you want to use the compensation function, you must have installed a compensation electrode (potassium or chloride) in another electrode slot and have configured it in the software.
Offset	-14.00 to 14.00 pH -100 to 100 mg/l **Factory setting** 0.00 pH 0.00 mg/l	The offset compensates for a difference between a laboratory measurement and an online measurement which is caused by interference ions. Enter this value manually. If you are using a compensation electrode, keep the offset at zero.
Compensation type	Options ▪ Chloride ▪ pH ▪ Potassium ▪ pH and potassium **Factory setting** Chloride Potassium	The options depend on the parameter to be compensated. You compensate for chloride when using a nitrate electrode, and you can compensate for potassium and pH when using the ammonium electrode. The factory setting depends on the electrode used.
Comp. electrode	Choice of slot	If you have installed and configured several compensation electrodes of the same type in the CAS40D sensor, in this function you have to define which electrode is used for compensation. Generally, you have a potassium or chloride electrode and Liquiline recognizes the right slot.
Selectivity coefficient	-10.00 to 10.00 **Factory setting** -2.00 (chloride) -0.85 (potassium)	The coefficients are empirical values.

Path: Menu/Setup/Inputs/ISE/Electrode slot/Compensation

Function	Options	Info
Mode	Options ■ + ■ - **Factory setting** -	The standard setting (-) corrects a measured value that is too high as a result of the effect of interference ions.

12.3.4 Extended setup

Main value format

If the measured variable of the electrode slot is not your main value for the ISE input, it will be displayed with all the measured values in the measuring mode.

Path: Menu/Setup/Inputs/ISE/Extended setup

Function	Options	Info
Main value format	Options ■ # ■ #.# ■ #.## **Factory setting** #.##	Specify the number of decimal places for the measured variable of the electrode slot.

Membrane timer

Path: Menu/Setup/Inputs/ISE/<Electrode slot>Extended setup

Function	Options	Info
Membrane timer	Options ■ Off ■ On **Factory setting** Off	Switches the timer on or off For sending a reminder to replace the sensor membrane
Membrane timer value	0 to 80 weeks **Factory setting** 26 weeks	After the time expires, diagnostic message M720, "Membrane change" appears. Then, replace the sensor diaphragm with a new one.

Calibration settings

Stability criteria

Path: Menu/Setup/Inputs/ISE/<Electrode slot>Extended setup/Calib. settings

Function	Options	Info
Stability criteria	Options ▪ Off ▪ Weak ▪ Medium ▪ Hard **Factory setting** Medium	In normal situations leave the stability criteria set to "Medium".

Buffer recognition (only pH)

Path: Menu/Setup/Inputs/ISE/<Electrode slot>Extended setup/Calib. settings

Function	Options	Info
Buffer recognition	Options ▪ Fixed ▪ Manual **Factory setting** Fixed	**Fixed** You choose values from a list. This list depends on the setting for "Buffer manufacturer". **Manual** You enter any two buffer values. These must differ in terms of their pH value.
Buffer manufacturer	Options ▪ Endress+Hauser ▪ Ingold/Mettler ▪ DIN 19266 ▪ DIN 19267 ▪ Merck/Riedel ▪ Hamilton ▪ Special buffer **Factory setting** Endress+Hauser	Temperature tables are stored internally in the unit for the following pH values: ▪ Endress+Hauser 2.00 / 4.00 / 7.00 / *(9.00)* / 9.20 / 10.00 / 12.00 ▪ Ingold/Mettler 2.00 / 4.01 / 7.00 / 9.21 ▪ DIN 19266 1.68 / 4.01 / 6.86 / 9.18 ▪ DIN 19267 1.09 / 4.65 / 6.79 / 9.23 / 12.75 ▪ Merck/Riedel 2.00 / 4.01 / 6.98 / 8.95 / 12.00 ▪ Hamilton 1.09 / 1.68 / 2.00 / 3.06 / 4.01 / 5.00 / 6.00 7.00 / 8.00 / 9.21 / 10.01 / 11.00 / 12.00
You have the possibility of defining two buffers of your own with the "Special buffer" option. For this purpose, two tables are displayed in which you can enter value pH value/temperature value pairs.		

Standard addition (all except for pH)

The "Standard addition" calibration type is available only via the "Expert" menu, which is normally available to service personnel only.

Different types of calibration are available to calibrate an ion-selective electrode.
Initial settings only have to be made for the standard addition method.

Path: Menu/Setup/Inputs/ISE/<Electrode slot>Extended setup/Calib. settings

Function	Options	Info
▶ Standard addition		
Sampling volume	0.00 to 5000.00 ml **Factory setting** 1000.00 ml	Here, specify the sample volume which you use during the calibration.
Standard volume	0.00 to 100.00 ml **Factory setting** 1.00 ml	Volume of the added standard solution per addition step
Standard concentration	0.00 to 10.00 mol/l **Factory setting** 1.00 mol/l	Concentration of the standard solution
No. of steps	1 to 4 **Factory setting** 3	Number of addition steps (=measuring points of the calibration function)

Calibration timer

You can specify the calibration interval for the sensor here.
Once the time configured elapses, the "Calibration timer" diagnostics message appears on the display.

The timer is reset automatically if you recalibrate the sensor.

Path: Menu/Setup/Inputs/ISE/<Slot>/Extended setup/Calib. settings

Function	Options	Info
Calibration timer	Options ▪ Off ▪ On **Factory setting** Off	Switches the function on or off
Calibration timer *Calibration timer="On"*	1 to 10000 h **Factory setting** 1000 h	Specify the time after which the timer should have timed out. Once this time has elapsed, the "Calib. Timer" diagnostics message, along with the code 102, appears on the display.

Diagnostics settings

This menu branch is used for specifying warning limits, and for defining whether and how diagnostics tools should be used.
The associated diagnostics code is displayed for every setting.

Process check system

--> "Inputs: General/Frequently occurring functions" section → 21

Slope (only pH)

The slope characterizes the sensor condition. The bigger the deviation from the ideal value (100%, corresponds to -59 mV/pH) the poorer the condition of the sensor.

Path: Menu/Setup/Inputs/ISE/Extended setup/Diagnostics settings

Function	Options	Info
▶ Slope	80.00 to 100.00 %	Specify your limit values for slope monitoring.
Warning limit	**Factory setting** 90.00 %	Associated diagnostics code and message text: 509 "Sensor calib."

Zero point (only pH)

The zero point characterizes the condition of the sensor reference. The bigger the deviation from the ideal value (pH 7.00) the poorer the condition. This can be caused by KCl dissolving away or reference contamination.

Path: Menu/Setup/Inputs/ISE/Extended setup/Diagnostics settings

Function	Options	Info
▶ Zero point *(pH glass)*	-10.00 to 10.00	Specify your limit values for zero point or operating point monitoring.
Upper warning limit	**Factory setting** 2.50	Associated diagnostics code and message text: 505 "Sensor calib."
Lower warning limit	**Factory setting** -2.50	Associated diagnostics code and message text: 507 "Sensor calib."

Delta slope (only pH)

The device determines the difference in slope between the last calibration and the penultimate calibration, and issues a warning or an alarm depending on the setting configured. The difference is an indicator for the condition of the sensor. The greater the change, the greater the wear experienced by the pH-sensitive glass membrane as a result of chemical corrosion or abrasion.

Path: Menu/Setup/Inputs/ISE/Extended setup/Diagnostics settings

Function	Options	Info
▶ Delta slope	0.50 to 10.00 %	Specify your limit values for monitoring the slope differential.
Function	Options ▪ On ▪ Off **Factory setting** Off	
Warning limit	**Factory setting** 2.5 %	Diagnostics code and associated message text: 518 "Sensor calib."

Delta zero point (only pH)

The device determines the difference between the last calibration and the penultimate calibration, and issues a warning or an alarm depending on the setting configured. The difference is an indicator for the condition of the sensor. The following applies to pH glass electrodes: The greater the change, the greater the wear experienced by the reference as a result of contaminating ions or KCl dissolving away.

Path: Menu/Setup/Inputs/ISE/Extended setup/Diagnostics settings

Function	Options	Info
▶ Delta zero point	0.00 to 5.00	Specify your limit values for monitoring the zero point or operating point differential.
Function	Options ▪ On ▪ Off **Factory setting** Off	
Warning limit	**Factory setting** 1.00	Diagnostics code and associated message text: 520 "Sensor calib."

12.4 Limits operating hours

The total operating time of the sensor and its use under extreme conditions is monitored. If the operating time exceeds the defined threshold values, the device issues a corresponding diagnostics message.

Each sensor has a limited life expectancy which heavily depends on the operating conditions. If you specify warning limits for operating times under extreme conditions, you can guarantee the operation of your measuring point without any downtime by performing maintenance tasks in time.

Path: Menu/Setup/Inputs/ISE

Function	Options	Info
▶ Limits operating hours		Specify your limit values for monitoring the number of operating hours under extreme conditions.
The range of adjustment for the operating hours alarm and warning limits is generally 1 to 50000 h.		
Function	Options ▪ On ▪ Off **Factory setting** Off	**On** The operation of the sensor under extreme conditions is monitored, recorded in the sensor and diagnostics messages are displayed on the controller. **Off** No diagnostics messages. However, the time the sensor operates under extreme conditions is recorded in the sensor and can be read in the sensor information in the diagnostics menu.
▶ Operating time		Total operating time of the sensor
Warning limit	**Factory setting** 36000 h	Diagnostics code and associated message text: 199 "Operating time"
▶ Operation > 30°C		
Warning limit	**Factory setting** 36000 h	Diagnostics code and associated message text: 191 "Operating time"
▶ Operation > 40°C		
Warning limit	**Factory setting** 36000 h	Diagnostics code and associated message text: 192 "Operating time"

13 Inputs: Interface

13.1 Basic settings

The CUS71DOUS71D is not detected automatically. It must be selected manually (Current sensor). During initial commissioning, data are recorded and calculated for 3 to 5 minutes before a measured value is displayed.

Path: Menu/Setup/Inputs/Ultrasonic interface

Function	Options	Info
Sensor operation	Options ▪ Scan for memosens sensor ▪ Current sensor **Factory setting** Current sensor	**Scan for memosens sensor** Searches for Memosens sensors **Current sensor** Connected sensor is used
Wiper function	Options ▪ Off ▪ On **Factory setting** On	Only for sensor version with wiper function
Wiper timing	1 to 240 min **Factory setting** 10 min	Only for sensor version with wiper function
Turbidity measurement	Options ▪ Off ▪ On **Factory setting** On	Only for sensor version with integrated turbidity measurement and wiper function
Turbidity unit	Options ▪ FNU ▪ NTU **Factory setting** FNU	Only for sensor version with integrated turbidity measurement and wiper function

13.2 Manual hold

--> "Inputs: General/Frequently occurring functions" section → 21

13.3 Tank configuration

The mounting location is defined by the tank depth and the sensor zero point. The accuracy of the measurement results depends on the accuracy of these settings.

Since the data in the sensor are overwritten with each change, data input might be delayed.

Path: Menu/Setup/Inputs/Ultrasonic interface/Tank configuration

Function	Options	Info
Blanket definition	Options ▪ Interface level ▪ Interface range **Factory setting** Interface level	Type of measurement that should be displayed and calculated: **Interface level** Distance from the tank floor to the interface, measuring direction from bottom to top **Interface range** Distance from the water line to the interface, measuring direction from top to bottom
Unit of measure	Options ▪ m ▪ cm ▪ ft ▪ inch **Factory setting** m	Any change to the unit is automatically accepted in all the displays.
Tank depth	0.4 to 10.0 m (1.4 to 32.8 ft) **Factory setting** 8.0 m (26.2 ft)	Distance from the water level to the tank floor
Zero adjust	0.4 to 10.0 m (1.4 to 32.8 ft) **Factory setting** 0.4 m (1.3 ft)	Distance from the water level to the sensor diaphragm
Blanking zone	Options ▪ Off ▪ On **Factory setting** Off	Permanent echo signals above and below a search window are masked out as interference signals.
Upper window limit	0.0 m to Lower window limit (1.4 ft ...) **Factory setting** 0.3 m (1.0 ft)	Distance to the water line below which the system should search for an interface. Permanent echo signals **above** this value are masked out as interference signals.
Lower window limit	Upper window limit to 11.0 m (to 32.8 ft) **Factory setting** 3.3 m (10.8 ft)	Distance to the water line Permanent echo signals **below** this value are masked out as interference signals.

13.4 Sensor signal

Change the factory settings in this menu if you discover incorrect measurements.

Path: Menu/Setup/Inputs/Ultrasonic interface/Sensor signal

Function	Options	Info
Acoustic control	Options ▪ Manual ▪ Automatic **Factory setting** Automatic	Controls the graphic display of the echo signal **Automatic** The transmitter uses the gain value determined in the self-test (initialization). In the measuring mode, this value is automatically adapted to the current process conditions. **Manual** You can enter a fixed gain value for diagnostics or test purposes.
Common gain values for applications involving relatively clear water and a "hard" interface are between 25 and 35. The values can be as high as 60 if the sludge/water transition is relatively "soft". If you require significantly higher gain values, this is an indication of overranging. It is then difficult or impossible to reliably evaluate the echo signal.		
Current gain	0 to 100 **Factory setting** 30	You can only configure the value with manual acoustic control. The value is read-only for automatic acoustic control.
Gain control set point *Acoustic control="Automatic"*	1 to 50 **Factory setting** 20	Horizontal position of the intersection of the interface line with the echo peak. The factory setting "20" corresponds to 20 % of the maximum display height.
Refresh rate	▪ 2 s ▪ 4 s ▪ 6 s ▪ 8 s **Factory setting** 4 s	Time frame for data refresh
Damping	5 to 255 **Factory setting** 130	Number of averaged values until data refresh Select a low damping value if the height of the interface can change very quickly. Higher damping prevents the system from tracking echo signals that occur briefly (e.g. caused by material movement, a rake or a floor scraper).

13.5 Extended setup

13.5.1 Sensor signal

You can adapt the sensor signal to the measuring point in this menu.

Path: Menu/Setup/Inputs/Ultrasonic interface/Extended setup/Sensor signal

Function	Options	Info
Speed of sound	300 to 2000 m/s (985 to 6561 ft/s) **Factory setting** 1482 m/s (4862 ft/s)	The sound speed depends on the medium temperature and the medium density. Since the temperature and density only fluctuate slightly in most water and wastewater applications, the factory setting of 1482 m/s has proven to be a suitable value.
Always speak to the manufacturer's service team before changing the setting for Speed of sound.		
▶ Sedimentation area		
Gain band	5 to 30 **Factory setting** 20	Restricts the gain in automatic mode in order to prevent system overload.
Gain increment	0.1 to 0.5 **Factory setting** 0.1	Defines how quickly the gain can adapt to changing process conditions in the automatic mode.
▶ Bottom definition		
Range above bottom	0.0 to 1.0 m (0.0 to 3.2 ft) **Factory setting** 0.1 m (0.3 ft)	Zone around the tank bottom in which extraneous signals can occur. Signals above your setting are masked out. This is needed for very low sludge levels or tanks free from sludge.
Bottom signal set point	0 to 100 **Factory setting** 60	Restricts the gain in automatic mode in order to prevent system overload when the tank is empty or does not have an interface.

13.5.2 Calculation

Path: Menu/Setup/Inputs/Ultrasonic interface/Extended setup/Calculation

Function	Options	Info
Interface	Options ▪ Top layer ▪ Lower interface **Factory setting** Top layer	Defines which signal the system should track and display when several interfaces are calculated. **Top layer** Determine the interface of thin material in the upper section **Lower interface** Determine the interface of thicker material near the floor
Interface window	Options ▪ Off ▪ On **Factory setting** Off	You can open another window near the interface. Specify a distance above and below the interface. The system primarily focuses on the signal within this window. Any signal outside this window must meet the search criteria for an interface for an extended period before the system recognizes it as an interface.
Above interface *Interface window="On"*	0.0 to 10.0 m (0.0 to 32.8 ft) **Factory setting** 0.6 m (2.0 ft)	The search window is indicated by broken lines in the graphic mode. The search window is 1.2 m wide in the factory setting for both parameters.
Below interface *Interface window="On"*		
Gate response rate	0 to 50 **Factory setting** 1	The response rate determines the speed at which the system updates the measuring window. A high value stands for a quick change.
Threshold	0 to 100 **Factory setting** 0	Filter for examining signals If a high value is selected, stronger signals are taken into account more. If a low value is selected, weaker signals are taken into account more.

13.5.3 Diagnostics settings

This menu branch is used for specifying warning limits, and for defining whether and how diagnostics tools should be used.
The associated diagnostics code is displayed for every setting.

Alarm delay echo loss

Path: Menu/Setup/Inputs/Ultrasonic interface/Extended setup/Diagnostics settings

Function	Options	Info
Alarm delay echo loss	0 to 255 min **Factory setting** 10 min	Delay time for an error message if the echo is lost

Diagnostic behavior

--> "Inputs: General/Frequently occurring functions" section → 21

13.5.4 Restart the sensor signal

The sensor is reinitialized with the "Restart sensor signal" action.
The sensor starts in the automatic mode and searches for the interface with the last sensor settings. The first measured value appears after around 3 to 5 minutes.

13.5.5 Sensor replacement

--> "Inputs: General/Frequently occurring functions" section → 21

13.5.6 Data processing factory setting

--> "Inputs: General/Frequently occurring functions" section → 21

13.5.7 Sensor factory setting

--> "Inputs: General/Frequently occurring functions" section → 21

14 Current inputs

The input can be used as the data source for limit switches and logbooks, for example. Furthermore, external values can be made available as set points for controllers.

Path: Menu/Setup/Inputs/Current input x:y[1)]

Function	Options	Info
Mode	Options ▪ Off ▪ 0 to 20 mA ▪ 4 to 20 mA **Factory setting** 4 to 20 mA	Select the same current range as in the data source (connected device).
Input mode	Options ▪ Parameter ▪ Current **Factory setting** Current	Select the input variable.
Meas. value format	Options ▪ # ▪ #.# ▪ #.## ▪ #.### **Factory setting** #.#	Specify the number of decimal places.
Parameter name *Input mode "Parameter"*	Free text	Assign a useful name, such as the parameter name, which the data source uses.
Unit of measure *Input mode "Parameter"*	Free text	You cannot choose the unit from a list. If you want to use a unit, you must enter it manually here.
Lower range value *Input mode "Parameter"*	-20.0 to Upper range value <engineering unit> **Factory setting** 0.0 <engineering unit>	Enter the measuring range. The lower and upper range values are assigned to the 0 or 4 mA value and the 20 mA value respectively. The system uses the engineering unit which you entered beforehand.
Upper range value *Input mode "Parameter"*	Upper range value to 10000.0 <engineering unit> **Factory setting** 10.0 <engineering unit>	
Damping	0 to 60 s **Factory setting** 0 s	The damping causes a floating average curve of the measured values over the time specified.

1) x:y = slot no. : input number

15 Outputs

15.1 Current outputs

The basic version of the device always has two current outputs.
You can configure additional current outputs with extension modules.
Under Menu/Setup/General settings set the current range of 0 to 20 mA or 4 to 20 mA.

Possible applications
- For outputting a measured value to a process control system or an external recorder
- For outputting a manipulated variable to connected actuators

The current output curve is always linear.

Path: Menu/Setup/Outputs/Current output x:y (slot:output number)

Function	Options	Info
Current output	Options ▪ On ▪ Off **Factory setting** Off	Use this function to activate or deactivate a variable being output at the current output
Source of data	Options ▪ None ▪ Connected inputs ▪ Controller **Factory setting** None	The sources of data on offer depend on your device version. All the sensors and controllers connected to inputs are available for selection.
Measured value	Options ▪ None ▪ Depends on theSource of data **Factory setting** None	The measured value you can select depends on the option selected under "Source of data".
The next table lists the measured values available depending on the data source. Apart from measured values from connected sensors, you can also select a controller as the data source. The best way to do so is by using the "Additional functions" menu. Here, you can also select and configure the current output for outputting the controlled variable.		
Range lower value	Selection range and factory settings depend on: "Measured value"	You can output the entire measuring range of the "Measured value" or just some of it at the current output. For this purpose, specify the upper and lower range values in accordance with your requirements.
Range upper value		

Path: Menu/Setup/Outputs/Current output x:y (slot:output number)

Function	Options	Info
Hold behavior	Options ▪ Freeze ▪ Fixed value ▪ None **Factory setting** Depends on the channel:output	**Freeze** The device freezes the last current value. **Fixed value** You define a fixed current value that is output at the output. **None** A hold does not affect this current output.
Hold current *Hold behavior="Fixed value"*	0.0 to 23.0 mA **Factory setting** 22.0 mA	Specify which current should be output at this current output in the event of a hold.

Measured valuedepending on theSource of data

Source of data	Measured value
pH Glass pH ISFET	Options ▪ Raw value mV ▪ pH ▪ Temperature
Redox	Options ▪ Temperature ▪ Redox mV ▪ Redox %
Oxygen (amp.) Oxygen (opt.)	Options ▪ Temperature ▪ Partial pressure ▪ Concentration liquid ▪ Saturation ▪ Raw value nA (only Oxygen (amp.)) ▪ Raw value µs (only Oxygen (opt.))
Cond i Cond c	Options ▪ Temperature ▪ Conductivity ▪ Resistance (only Cond c) ▪ Concentration (only Cond i)
Chlorine	Options ▪ Temperature ▪ Current ▪ Concentration
ISE	Options ▪ Temperature ▪ pH ▪ Ammonium ▪ Nitrate ▪ Potassium ▪ Chloride

Measured valuedepending on theSource of data

Source of data	Measured value
TU/TS	Options ▪ Temperature ▪ Turbidity g/l ▪ Turbidity FNU
Nitrate	Options ▪ Temperature ▪ NO3 ▪ NO3-N
Ultrasonic interface(interface measurement)	Options ▪ Interface ▪ Turbidity
SAC	Options ▪ Temperature ▪ SAC ▪ Transm. ▪ Absorption ▪ COD ▪ BOD
Controller 1	Options ▪ Bipolar(only current outputs) ▪ Unipolar+ ▪ Unipolar-
Controller 2	
Mathematical functions	All the mathematical functions can also be used as a data source and the calculated value can be used as the measured value.

Outputting the controller manipulated variable via the current output

Assign "Unipolar+" to the output to which an actuator that can increase the measured value is connected. Assign "Unipolar-" to the output to which an actuator that can decrease the measured value is connected.

To output the manipulated variable of a two-sided controller, positive manipulated variables and negative manipulated variables generally have to be output to different actuators, as most actuators are able to influence the process in one direction only (not in both). For this purpose, the instrument splits the bipolar manipulated variable y into two unipolar manipulated variables, y+ and y-.

Only the two unipolar manipulated variable parts are available for selection for outputting to modulated relays. If outputting the values via a current output, you also have the possibility of outputting the bipolar manipulated variable y to one current output only (split range).

15.2 Alarm relay and optional relays

The basic version of the device always has one alarm relay.
Additional relays are also available depending on the version of the device.

The following functions can be output via a relay

- Limit switch status
- Controller manipulated variable for controlling an actuator
- Diagnostics messages
- Status of a cleaning function in order to control a pump or a valve

You can assign a relay to multiple inputs in order to clean several sensors with just one cleaning unit, for example.

Path: Menu/Setup/Outputs/Alarm relay or relay at channel no.

Function	Options	Info
Function	Options ▪ Off ▪ LimitSwitch ▪ Controller ▪ Diagnostics ▪ Cleaning **Factory setting** Off	The following functions depend on the option selected. These versions are illustrated individually in the following section to provide a clearer understanding of the options. Function="Off" switches off the relay function and means no further settings are required.

15.2.1 Outputting the status of a limit switch

Function="LimitSwitch"

Function	Options	Info
Source of data	Options ▪ None ▪ Limit switch 1 ▪ Limit switch 2 ▪ Limit switch 3 ▪ Limit switch 4 ▪ Limit switch 5 ▪ Limit switch 6 ▪ Limit switch 7 ▪ Limit switch 8 **Factory setting** None	Select the limit switch via which the status of the relay is to be output. The limit switches are configured in the "Setup/Additional functions/Limit switches" menu.

15.2.2 Outputting the manipulated variable of a controller

To output a controller manipulated variable via a relay, the relay is modulated. The relay is energized (pulse, t_1) and is then de-energized (interval, t_0).

Function="Controller"

Function	Options	Info
Source of data	Options ▪ None ▪ Controller 1 ▪ Controller 2 **Factory setting** None	Select the controller that should act as the data source.
Operating mode	Options ▪ PWM ▪ PFM **Factory setting** PWM	PWM=pulse width modulation PFM=pulse frequency modulation

Types of modulation:

1. **PWM** (pulse width modulation):
   The duty cycle is varied within a period **T** ($T=t_1+t_0$). The cycle duration remains constant.

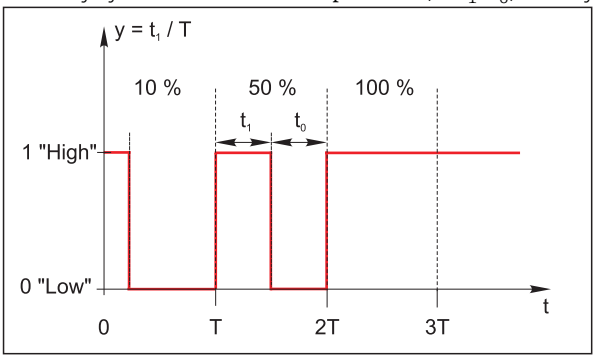

   Typical application: solenoid valve

2. **PFM** (pulse frequency modulation):
Here, pulses of a constant length (t_1) are output and the interval between the pulses varies (t_0). At a maximum frequency, $t_1 = t_0$.

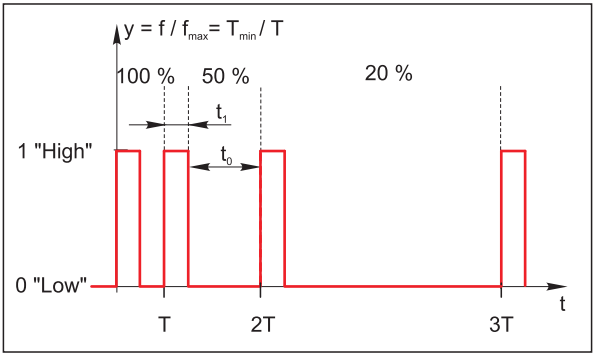

Typical application: dosing pump

Function="Controller"

Function	Options	Info
Actuator type	Options ▪ None ▪ Unipolar- ▪ Unipolar+ **Factory setting** None	Here you specify what part of the controller should power the relay. "Unipolar+" is the part of the manipulated variable which the controller uses to increase the process value (e.g. for heating purposes). On the other hand, select "Unipolar-" if you want to connect an actuator to the relay that causes the controlled variable to drop (e.g. for cooling purposes).
Cycle duration *Operating mode="PWM"*	(Shortest turn-on time) to 999.0 s **Factory setting** 10.0 s	Specify the cycle duration within which the duty cycle should be varied (only PWM).
The settings for Cycle duration and Shortest turn-on time mutually affect one another. The following applies: Cycle duration ≥ Shortest turn-on time.		
Shortest turn-on time *Operating mode="PWM"*	0.3 s to (Cycle duration) **Factory setting** 0.3 s	Pulses that are shorter than this limit value are not output in order to conserve the actuator.
Maximum frequency *Operating mode="PFM"*	1 to 180 min^{-1} **Factory setting** 60 min^{-1}	Maximum number of pulses per minute The controller calculates the pulse duration based on this setting.

15.2.3 Outputting diagnostics messages via the relay

You can output two categories of diagnostics messages via the relay:
1. Diagnostics messages from one of the 4 Namur classes
   (--> BA00445C or BA01227C "Maintenance&Diagnostics" for more information on the Namur classes)
2. Diagnostics messages which you have individually assigned to the relay output

A message is individually assigned to the relay output at 2 specific points in the menu:
- Menu/Setup/General settings/Diagnostics/Device behavior
  (device-specific messages)
- Menu/Setup/Inputs/../Diagnostics settings/Diag. behavior
  (sensor-specific messages)

Before being able to assign the relay output to a special message in "Device behavior", you must first configure Outputs/relay x:y or /Alarm relay/Function="Diagnostics".

Function="Diagnostics"

Function	Options	Info
Operating mode	Options ▪ as assigned ▪ Namur M ▪ Namur S ▪ Namur C ▪ Namur F **Factory setting** as assigned	**as assigned** If this option is selected, the diagnostics messages which you have individually assigned to the relay are output via the relay. **Namur M ... F** If you decided to use one of the Namur classes, all the messages that are assigned to the individual class are output via the relay. You can also change the Namur class assignment for every diagnostics message. (Menu/Setup/General settings/Diagnostics/Device behavior or Menu/Setup/Inputs/../Diagnostics settings/Diag. behavior)
Attributed diagnostic messages *Operating mode="as assigned"*	Read only List of diagnostic messages	All the messages assigned to the relay output appear on the display. You do not have the option of editing the information here.

15.2.4 Outputting the status of a cleaning function

Function="Cleaning"

Function	Options	Info
Assignment	Options ▪ None ▪ Cleaning 1 - Water ▪ Cleaning 1 - Cleaner ▪ Cleaning 2 - Water ▪ Cleaning 2 - Cleaner ▪ Cleaning 3 - Water ▪ Cleaning 3 - Cleaner ▪ Cleaning 4 - Water ▪ Cleaning 4 - Cleaner **Factory setting** None	Here you can specify how a cleaning function should be displayed for the alarm relay. You can define the cleaning programs under: Menu/Setup/Additional functions/Cleaning.

15.3 HART

Specify which device variables should be output via HART communication.

You can define a maximum of 16 device variables:
- ▶ Define the data source. You can choose from the sensor inputs and the controllers.
- ▶ From the source, select the measured value that should be output.
- ▶ Define how the device should behave in the event of a "Hold".
- ▶ The configuration options for "Source of data", "Measured value" and "Hold behavior" are identical to those described in the "Outputs/Current outputs" section. Please refer to this section for more information.
- ▶ Please note that if you select Hold behavior="Freeze", the system not only flags the status but also actually "freezes" the measured value.

More information is provided in BA00486C "HART communication".

15.4 PROFIBUS DP

15.4.1 Device variables (device --> PROFIBUS)

Specify which process values should be mapped to the PROFIBUS function blocks and are thereby available for transmission via PROFIBUS communication.

You can define a maximum of 16 device variables (AI Blocks):
- ▶ Define the data source.
  Choose between sensor inputs, current inputs or mathematical functions whose measured values should be transmitted.
- ▶ From the data source, select the measured value to be transmitted.

In addition, you can define 8 binary variables (DI Blocks):
- ▶ Define the data source.
  Select the limit switch or relay whose status should be transmitted.

15.4.2 PROFIBUS variables (PROFIBUS --> device)

Not in the "Menu/Setup/Outputs" menu
- ▶ A maximum of 4 analog (AO) and 8 digital (DO) PROFIBUS variables are available as measured values in the controller, limit switch or current output menus.
- ▶ Example: Using an AO or DO value as the set point for the controller
  - "Menu/Setup/Additional functions/Controller 1" menu
  - In the menu mentioned, define PROFIBUS as the data source.
  - Select the desired analog output (AO) or digital output (DO) as the measured value.

More information is provided in the SD01188C document on the CD.

15.5 Modbus RS485 and Modbus TCP

Specify which process values should be output via Modbus RS485 communication or via Modbus TCP.
In the case of Modbus RS485, you can switch between the RTU and the ASCII protocol.

You can define a maximum of 16 device variables:
- ▶ Define the data source. You can choose from the sensor inputs and the controllers.
- ▶ From the source, select the measured value that should be output.
- ▶ Define how the device should behave in the event of a "Hold".
- ▶ The configuration options for "Source of data", "Measured value" and "Hold behavior" are identical to those described in the "Outputs/Current outputs" section. Please refer to this section for more information.
- ▶ Please note that if you select Hold behavior="Freeze", the system not only flags the status but also actually "freezes" the measured value.

More information is provided in the SD01189C document on the CD.

16 Binary inputs and outputs

The optional "DIO" hardware module with 2 digital inputs and 2 digital outputs enables the following

- via a digital input signal
  - measuring range switching for conductivity (upgrade code required, see accessories)
  - an external hold
  - a cleaning interval to be triggered
  - a PID controller to be switched on and off, e.g. via the proximity switch of CCA250
  - the use of the input as an "analog input" for pulse-frequency modulation (PFM)
- via a digital output signal
  - the static transmission (similar to a relay) of diagnostic states, point level switch states etc.
  - the dynamic transmission (comparable to a non-wearing "analog output") of PFM signals, e.g. to control dosing pumps.

16.1 Application examples

16.1.1 Chlorine control with feedforward control

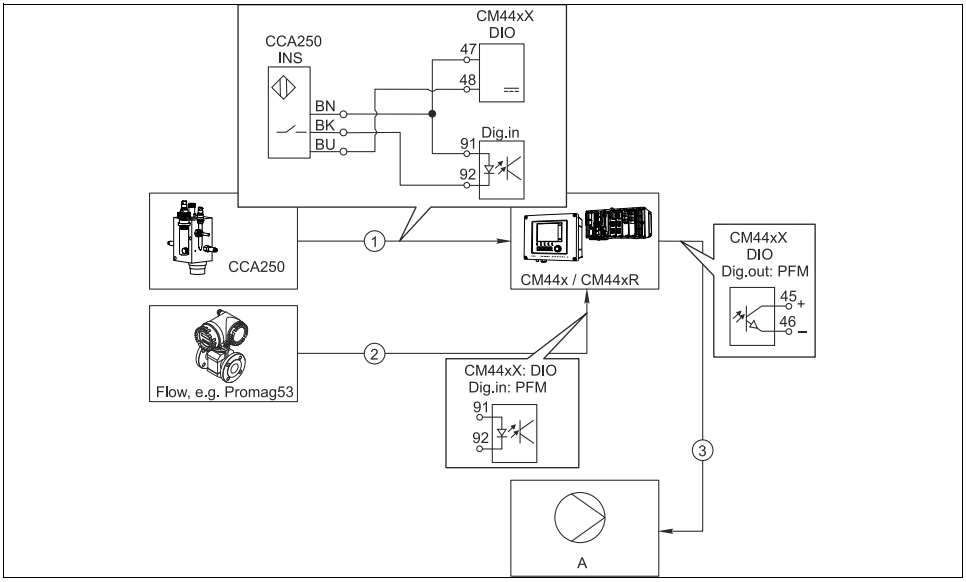

Fig. 10: Example of chlorine control with feedforward control

1 Connection of the inductive proximity switch INS of the CCA250 assembly at the digital input of the DIO module for enabling the controller
2 Connection of the signal from a flowmeter to the digital input of the DIO module using the pulse-frequency modulation (=PFM, setting in the CM44x software) for feedforward control
3 Activation of a (pulse) dosing pump via a digital output of the DIO module using the PFM
A Dosing pump

Chlorine control with feedforward control

Utilize the advantage of the effectively wear-free control with binary outputs versus a control system with relay. It is possible to achieve virtually continuous dosing using a dosing pump with higher input frequency through pulse frequency modulation (PFM).

1. Connect the proximity switch INS from assembly CCA250 to a digital input of the DIO module. Configure a controller in the software, selecting the binary input for the function "Controller Enable" which the proximity switch is connected to. Leave the "Signal type" in the inputs menu at the factory setting "Static signal" as the selected input.
2. Connect the flowmeter value to the second input of the DIO module. Set the "Signal type" for this input to "PFM" in the inputs menu and select the corresponding measured value.
   ↳ You can now use this input in the controller menu as the disturbance variable for your controller [1]. To do so, in the submenu "Disturbance variable" select the binary input to which you connected the flow measured value as the "Source of data."
3. You can activate a dosing pump through PFM via a digital output of the DIO module. In the outputs menu, set the "Signal type" of the corresponding binary output to "PFM" and use the previously configured controller as the "Source of data." Observe your dosing's direction of action, so that you correctly install the "Actuator type."

You must perform additional settings in the controller menu to fully customize the control to your process conditions.

1) An activation code, Order No. 71211288, is necessary for the "feedforward control" function.

16.1.2 CM44x as cleaning master

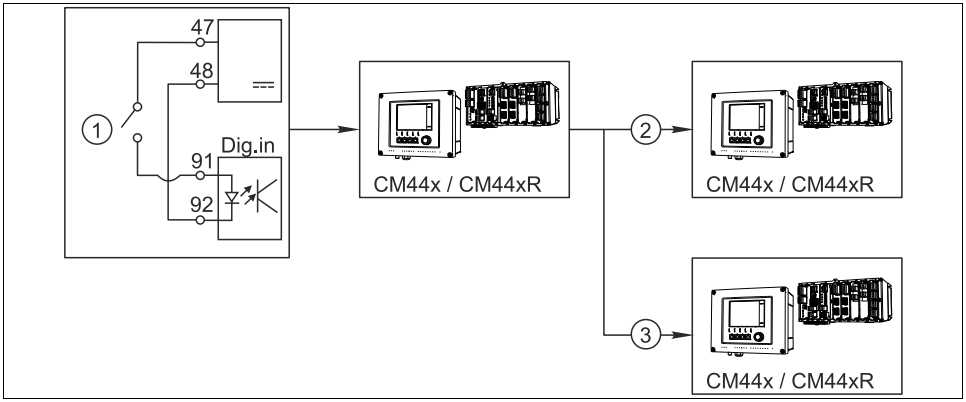

Fig. 11: Example of a central cleaning control

1 External cleaning trigger at the binary input
2 Transferring the external hold over binary output to other measuring devices without connected cleaning functions
3 Transferring the cleaning trigger over a binary output to other self-cleaning measuring points

CM44x as "cleaning master"

1. An external trigger actuates a cleaning at the master. A cleaning unit is connected over a relay or a binary output, for example.
2. The cleaning trigger is transferred to another device via a binary output. This does not have its own connected cleaning unit, but its sensors are installed in the medium affected by cleaning the master and are set to hold by the trigger.
3. The trigger is transferred via an additional binary output to another device, whose connected sensors have their own cleaning units. The signal can be used to simultaneously activate a self-cleaning with the master.

16.2 Binary input configuration

Path: Menu/Setup/Inputs/Binary input x:y[1)]

Function	Options	Info
Binary input	Options ▪ Off ▪ On **Factory setting** On	Switching the input on/off
Signal type	Options ▪ Static signal ▪ PFM **Factory setting** Static signal	Select the signal type. **Static signal** Use this setting to read out the position of, for example, an on/off switch, an inductive proximity switch or a PLC binary output. Signal application: for measuring range switching, acceptance of an external hold, as a cleaning trigger or for controller activation **PFM** The PFM setting produces a pulse-frequency-modulated signal that is subsequently available on the device as a quasi-continuous process value. Example: Measuring signal of a flowmeter
Signal type = "Static signal"		
Signal level	Options ▪ High ▪ Low **Factory setting** High	Determine which input signal levels should activate, for example, measuring range switching or a cleaning. **High** Input signals between 11 and 30 V DC **Low** Input signals between 0 and 5 V DC
Signal type = "PFM"		
Max. frequency	100.00 to 1000.00 Hz **Factory setting** 1000.00 Hz	Maximum frequency of the PFM input signal Is to equal the maximum possible upper limit of the measuring range. If the value selected is too small, higher frequencies will not be detected. If the value is too large, on the other hand, the resolution for small frequencies will be relatively inexact.
Meas. value format	Options ▪ # ▪ #.# ▪ #.## ▪ #.### **Factory setting** #.##	Specify the number of decimal places.

Path: Menu/Setup/Inputs/Binary input x:y[1)]

Function	Options	Info
Input mode	Options ▪ Frequency ▪ Parameter **Factory setting** Frequency	**Frequency** Display in Hz in the measuring menu **Parameter** You subsequently determine the parameter name and unit. These are then displayed in the measuring menu.
Parameter name *Input mode = "Parameter"*	Free text	Define a name for the parameter, e.g. "flow rate."
Unit of measure *Input mode = "Parameter"*	Free text	Determine the unit in which your parameter should be displayed, e.g." l/min."
Lower range value *Input mode = "Parameter"*	-2000.00 to 0.00 **Factory setting** 0.00	Your previously defined unit is additionally displayed. The start of measuring range corresponds to a frequency of 0 Hz.
Upper range value *Input mode = "Parameter"*	0.00 to 10000.00 **Factory setting** 0.00	The end of measuring range corresponds to the maximum frequency defined above. The displayed unit is the one predefined by you.
Damping	0 to 600 s **Factory setting** 0 s	The damping generates a floating average curve of the measured value over the specified time.

1) x:y = slot no. : input number

16.3 Configuration of binary outputs

Path: Menu/Setup/Outputs/Binary output x:y[1)]

Function	Options	Info
Binary output	Options ▪ Off ▪ On **Factory setting** On	Switching the output on/off
Signal type	Options ▪ Static signal ▪ PFM **Factory setting** Static signal	Select the signal type. **Static signal** Comparable to a relay: output of a diagnostic status or a limit contactor **PFM** You can output a measured value, e.g. the chlorine value or the manipulated variable of a controller. It functions as a "wear-free" switching contact that can be used to activate a dosing pump, for example.
Signal type = "PFM"		
Max. frequency	1.00 to 1000.00 Hz **Factory setting** 1000.00 Hz	Maximum frequency of the PFM output signal Is to equal the maximum possible upper limit of the measuring range.
Meas. value format	Options ▪ # ▪ #.# ▪ #.## ▪ #.### **Factory setting** #.##	Specify the number of decimal places.
Source of data	Options ▪ None ▪ Sensor inputs ▪ Binary inputs ▪ Controller ▪ Fieldbus signals ▪ Mathematical functions **Factory setting** None	Source, whose value should be read out as a frequency over the binary output.
Measuring value *Source of data = an input*	Selection dependent on "Source of data"	"Inputs" = everything except controllers

Path: Menu/Setup/Outputs/Binary output x:y[1)]

Function	Options	Info
Actuator type *Source of data = a controller*	Options ▪ None ▪ Bipolar ▪ Unipolar+ ▪ Unipolar- **Factory setting** None	Determines which controller component the connected actuator, e.g. the dosing pump, should trigger. **Unipolar+** Part of the manipulated variable that the controller uses to increase the process value **Unipolar-** For connected actuators that decrease the controlled variable **Bipolar** "Split range"
Hold behavior	Options ▪ Freeze ▪ Fixed value ▪ None **Factory setting** Freeze	**Freeze** The device freezes the last value. **Fixed value** You define a fixed current value that is transmitted at the output. **None** A hold does not affect this output.
Hold value *Hold behavior = "Fixed value"*	0 to 100 % **Factory setting** 0 %	
Error behavior	Options ▪ Freeze ▪ Fixed value **Factory setting** Fixed value	**Freeze** The device freezes the last value. **Fixed value** You define a fixed current value that is transmitted at the output.
Error value *Error behavior = "Fixed value"*	0 to 100 % **Factory setting** 0 %	

Path: Menu/Setup/Outputs/Binary output x:y[1)]

Function	Options	Info
Signal type = "Static signal"		
Function	Options ▪ None ▪ Limit switches ▪ Diagnostics message ▪ Cleaning **Factory setting** None	Source for the outputted switching state The following functions depend on the option selected. Function = "None" switches the function off without requiring any settings.
Assignments *Function = "Cleaning"*	Multiple selection ▪ Cleaning 1 - Water ... ▪ Cleaning 4 - Cleaner	Here you can decide which binary outputs should be used for activating the valves and pumps. Here you concretely assign a control signal to the binary output for the cleaner/water dosing of a cleaning program. You can define the cleaning programs under: Menu/Setup/Additional functions/Cleaning.
Data sources *Function = "Limit switches"*	Multiple selection ▪ Limit switch 1 ... ▪ Limit switch 8	Select the limit contactor to be transmitted over the binary output. The limit switches are configured in the "Setup/Additional functions/Limit switches" menu.
Operating mode *Function = "Diagnostics message"*	Options ▪ as assigned ▪ Namur M ▪ Namur S ▪ Namur C ▪ Namur F **Factory setting** as assigned	**as assigned** With this selection, the diagnosis messages are transmitted over the binary output that you individually allocated to it. **Namur M ... F** When you choose one of the Namur classes, all messages allocated to that respective class are output. You can also change the Namur class assignment for every diagnostics message. (Menu/Setup/General settings/Diagnostics/Device behavior or Menu/Setup/Inputs/../Diagnostics settings/Diag. behavior)

1) x:y = slot no. : input number

17 Additional functions

17.1 Limit switch

There are different ways of configuring a limit switch:
- Assigning a switch-on and switch-off point
- Assigning a switch-on and switch-off delay for a relay
- Setting an alarm threshold and also outputting an error message
- Starting a cleaning function

Path: Menu/Setup/Additional functions/Limit switches/Limit switches 1 to 8

Function	Options	Info
Source of data	Options ▪ None ▪ Connected sensors ▪ Controllers available **Factory setting** None	Specify the input or output which should be the source of data for the limit switch.
Measuring value	Options ▪ None ▪ Depends on theSource of data **Factory setting** None	The measured value you can select depends on the option selected under "Source of data".

Measured valuedepending on theSource of data

Source of data	Measured value
pH Glass pH ISFET	Options ▪ Raw value mV ▪ pH ▪ Temperature
Redox	Options ▪ Temperature ▪ Redox mV ▪ Redox %
Oxygen (amp.) Oxygen (opt.)	Options ▪ Temperature ▪ Partial pressure ▪ Concentration liquid ▪ Saturation ▪ Raw value nA (only Oxygen (amp.)) ▪ Raw value µs (only Oxygen (opt.))

Measured valuedepending on theSource of data

Source of data	Measured value
Cond i	Options ▪ Temperature ▪ Conductivity ▪ Resistance (only Cond c) ▪ Concentration (only Cond i)
Cond c	
Chlorine	Options ▪ Temperature ▪ Current ▪ Concentration
ISE	Options ▪ Temperature ▪ pH ▪ Ammonium ▪ Nitrate ▪ Potassium ▪ Chloride
TU/TS	Options ▪ Temperature ▪ Turbidity g/l ▪ Turbidity FNU
Nitrate	Options ▪ Temperature ▪ NO3 ▪ NO3-N
Ultrasonic interface(interface measurement)	Options ▪ Interface ▪ Turbidity
SAC	Options ▪ Temperature ▪ SAC ▪ Transm. ▪ Absorption ▪ COD ▪ BOD
Controller 1	Options ▪ Bipolar(only current outputs) ▪ Unipolar+ ▪ Unipolar-
Controller 2	
Mathematical functions	All the mathematical functions can also be used as a data source and the calculated value can be used as the measured value.

You can monitor the manipulated variable by assigning the controller manipulated variable to a limit switch (e.g. configure a dosing time alarm).

Path: Menu/Setup/Additional functions/Limit switches/Limit switches 1 to 8

Function	Options	Info
Cleaning program	Options ▪ None ▪ Cleaning 1 ▪ Cleaning 2 ▪ Cleaning 3 ▪ Cleaning 4 **Factory setting** None	Use this function to choose the cleaning instance which should be started when the limit switch is active.
Function	Options ▪ On ▪ Off **Factory setting** Off	Activating/deactivating the limit switch
Operating mode	Options ▪ Above limit check ▪ Below limit check ▪ In range check ▪ Out of range check ▪ Change rate **Factory setting** Above limit check	Type of limit value monitoring: ▪ Limit value overshoot or undershoot→ 12 ▪ Measured value within or outside a range → 13 ▪ aChange rate→ 15
Limit value	**Settings** Depends on the measured value	*Operating mode="Above limit check" or "Below limit check"*

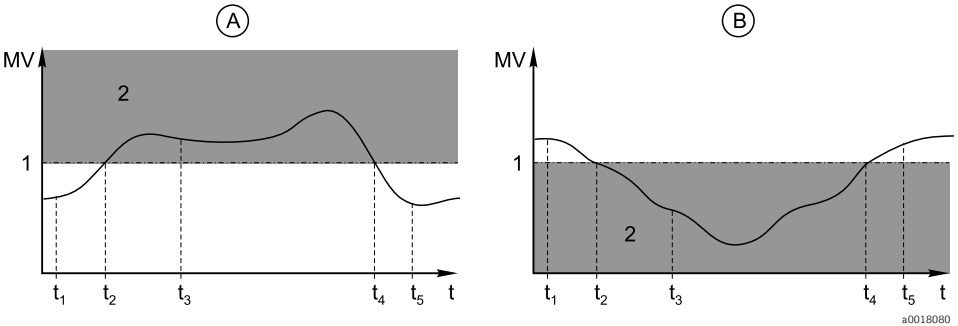

Fig. 12: ÜExceeding (A) and undershooting (B) a limit value (without hysteresis and switch-on delay)

1 Limit value
2 Alarm range
t_1,t_3,t_5 No action
t_2,t_4 An event is generated

- If the measured values (MV) are increasing, the relay contact is closed when the on-value is exceeded ("Limit value" + "Hysteresis") and the start delay has elapsed ("Start delay").
- If the measured values are decreasing, the relay contact is reset when the off-value is undershot ("Limit value" - "Hysteresis") and following the release delay ("Switch off delay").

Path: Menu/Setup/Additional functions/Limit switches/Limit switches 1 to 8

Function	Options	Info
Range lower value Range upper value	**Settings** Depends on the measured value	*Operating mode="In range check" or "Out of range check"*

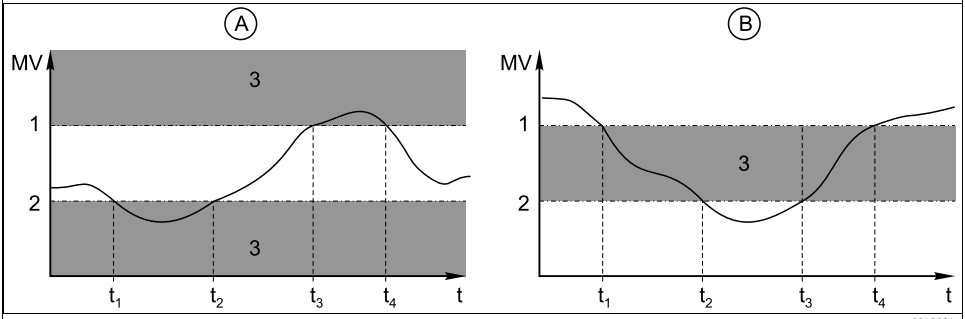

Fig. 13: Monitoring outside (A) and within (B) a range (without hysteresis and switch-on delay)

1 End of range
2 Start of range
3 Alarm range
$t_{1, 2, 3, 4}$ An event is generated

- If the measured values (MV) are increasing, the relay contact is closed when the on-value is exceeded ("Range lower value" + "Hysteresis") and the start delay has elapsed ("Start delay").
- If the measured values are decreasing, the relay contact is reset when the off-value is undershot ("Range upper value" - "Hysteresis") and following the release delay ("Switch off delay").

Hysteresis	**Settings** Depends on the measured value	*Operating mode="In range check", "Out of range check","Above limit check" or "Below limit check"*

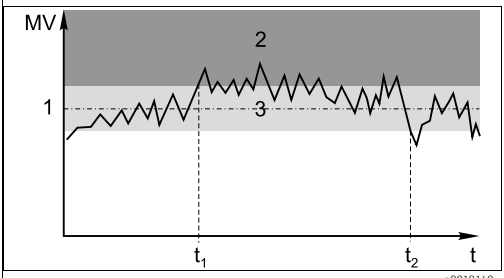

The hysteresis is needed to ensure a stable switching behavior.

The device software adds or subtracts the value set here to/from the limit value (Limit value, Range lower value or Range upper value). This results in the double "Hysteresis" value for the hysteresis range around the limit value.
An event is then only generated if the measured value (MV) completely passes through the hysteresis range.
→ 14

Fig. 14: Hysteresis taking the example of limit value overshoot

1 Limit value
2 Alarm range
3 Hysteresis range
t_1, t_2 An event is generated

Path: Menu/Setup/Additional functions/Limit switches/Limit switches 1 to 8

Function	Options	Info
Start delay	0 to 9999 s **Factory setting** 0 s	*Operating mode="In range check", "Out of range check","Above limit check" or "Below limit check"* Synonyms: pick-up and drop-out delay
Switch off delay		
Delta value	**Settings** Depends on the measured value	*Operating mode="Change rate"* The slope of the measured value (MV) is monitored in this mode. An event is generated if, in the given timeframe (Delta time), the measured value increases or decreases by more than the specified value (Delta value). No further event is generated if the value continues to experience such a steep increase or decrease. If the slope is back below the limit value, the alarm status is reset after a preset time (Auto Confirm). Events are triggered by the following conditions in the example given: $t_2 - t_1$ < "Delta time" **and** ΔMV_1 > "Delta value" $t_4 - t_3$ > "Auto Confirm" **and** ΔMV_2 < "Delta value" $t_6 - t_5$ < "Delta time" **and** ΔMV_3 > ΔMV
Delta time	00:01 to 23:59 **Factory setting** 01:00	
Auto Confirm	00:01 to 23:59 **Factory setting** 00:01	

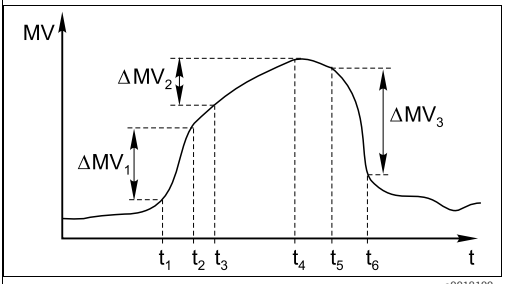

Fig. 15: Change rate

17.2 Controller

17.2.1 Controller structure in Laplace representation

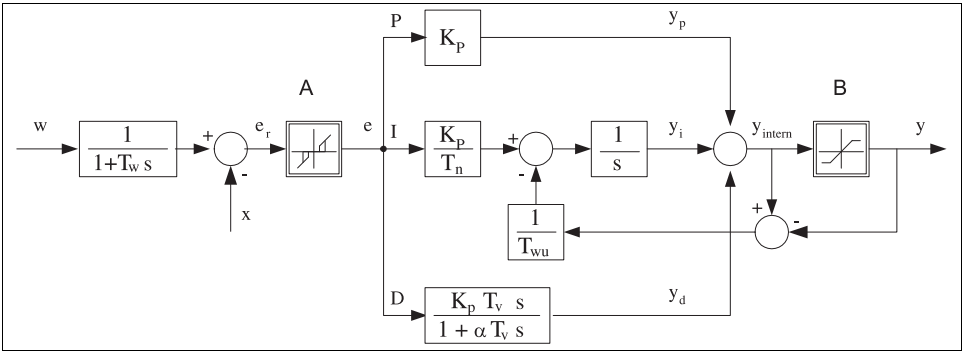

Fig. 16: Block diagram of the controller structure

A	*Neutral zone*
B	*Output limiting*
K_p	*Gain (P-value)*
T_n	*Integral action time (I-value)*
T_v	*Derivative action time (D-value)*
T_w	*Time constant for set point damping*
T_{wu}	*Time constant for anti-windup feedback*
P	*Proportional value*
I	*Integral value*
D	*Derivative value*
αT_v	*Damping time constant with α= 0 to 1*
e	*Control deviation*
w	*Set point*
x	*Controlled variable*
y	*Manipulated variable*

The controller structure of the device comprises set point damping at the input to prevent erratic changes in the manipulated variable if the set point changes. The difference between the set point w and the controlled variable (measured value) X results in the control deviation which is filtered by a neutral zone.
The neutral zone is used to suppress control deviations (e) that are too small. The control deviation thus filtered is now fed to the actual PID controller which divides into three parts based on the P (proportional), I (integral) and D (derivative) values (top-down). The integral section (middle) also comprises an anti-windup mechanism for limiting the integrator. A low-pass filter is added to the D-section to damp hard D-terms in the manipulated variable. The sum of the 3 sections results in the internal controller manipulated variable which is limited according to the settings (for PID-2s to -100% to +100%).
The graphic does not illustrate a downstream filter for limiting the rate of change of the manipulated variable (can be configured in the menu in "Max Y change rate /s").

In the menu do not configure the gain K_p. Instead configure the reciprocal value, the proportional band X_p (K_p=1/X_p).

17.2.2 Configuration

Make the following decisions when configuring a controller:

1. What type of process can your process be assigned to?
   -->Process type
2. Should it be possible to influence the measured variable (controlled variable) in one direction or in both directions?
   One-sided or two-sided controller, -->Controller type
3. What should be the controlled variable (sensor, measured value)? -->Controlled variable
4. Do you have a disturbance variable that should be active at the controller output? -->Disturbance variable
5. Define the parameters for the controller:
   - Setpoint, -->Setpoint
   - Neutral zone, -->Xn
   - Proportional band, -->Xp
   - Integral action time (I-value), -->Tn
   - Derivative action time (D-value), -->Tv
6. What should the controller do in the event of a hold (measured error, sensor replacement, cleaning etc.)?
   - Pause or continue with dosing?
   - At the end of a hold, continue or restart the control loop (affects I-value)?
7. How should the actuator be triggered?
   - Assign "Unipolar+" to the output for an actuator which can increase the measured value.
   - Assign "Unipolar-" to the output for an actuator which can decrease the measured value.
   - Select "Bipolar" if you want to output the manipulated variable via one current output only (split range).
8. Configure the outputs and switch on the controller.

Path: Menu/Setup/Additional functions/Controller 1 or Controller 2

Function	Options	Info
Control	Options ▪ Off ▪ Automatic ▪ Manual mode **Factory setting** Off	First configure the controller and leave the switch at "Off" during this time. Once you have made all the settings, you can assign the controller to an output and switch it on.
▶ Manual mode		
Y	-100 to 100 % **Factory setting** 0 %	Specify the manipulated variable that should be output in manual mode.
Y Actual output	Read only	Manipulated variable actually output.
Name	Free text	Give the controller a name so you can identify it later on.

Path: Menu/Setup/Additional functions/Controller 1 or Controller 2

Function	Options	Info
Controller Enable	Options ▪ None ▪ Binary inputs ▪ Limit switch ▪ Fieldbus variables **Factory setting** None	In connection with the DIO module, you can select a binary input signal, e.g. from an inductive proximity switch, as a source for enabling the controller.
Setup Level	Options ▪ Standard ▪ Advanced **Factory setting** Standard	The Setup Level changes the number of parameters that can be configured. If you choose "Standard" the other controller parameters are active nevertheless. The system uses the factory settings which usually suffice in most cases.
Process type	Options ▪ Inline ▪ Batch **Factory setting** Inline	Decide what type of process best describes your particular process (see the explanation below).

Batch process
The medium is in a closed system.
The task of the control system is to dose in such a way that the measured value (controlled variable) changes from its start value to its target value. No more dosing is needed once the setpoint has been reached and the system is stable. If the target value is overshot, a two-sided control system can compensate for this.
In the case of 2-sided batch control systems, a neutral zone is used/configured to suppress oscillations around the setpoint.

In-line process
In an in-line process, the control system works with the medium flowing by in the process. Here, the controller has the task of using the manipulated variable to set a mixture ratio between the medium and dosing agent such that the resulting measured variable corresponds to the setpoint. The properties and volume of the medium flow can change at any time and the controller has to react to these changes on a continuous basis. If the flow rate and medium remain constant, the manipulated variable can also assume a fixed value once the process has settled. Since the control process is never "finished" here, this type of control is also referred to as continuous control.

A mixture of both process types can often be found in practice: the semi-batch process. Depending on the ratio between the flow and the container volume, this arrangement behaves either like a batch process or an in-line process.

Path: Menu/Setup/Additional functions/Controller 1 or Controller 2

Function	Options	Info
Controller type	Options ▪ PID 1-sided ▪ PID 2-sided **Factory setting** PID 2-sided	Depending on the actuator connected, you influence the process in just one direction (e.g. heating) or in both directions (e.g. heating and cooling).

A 2-sided controller can output a manipulated variable in the range from -100% to +100%, i.e. the manipulated variable is bipolar. The manipulated variable is positive if the controller should increase the process value. In the case of a pure P-controller, this means that the value of the controlled variable x is smaller than the setpoint w. On the other hand, the manipulated variable is negative if the process value should be decreased. The value for x is greater than the setpoint w. The following graphic illustrates the relationship $y = (w-x)/X_p$:

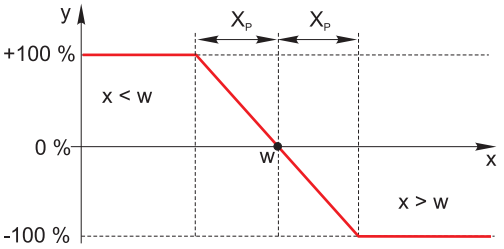

Effective direction *Controller type="PID 1-sided"*	Options ▪ Direct ▪ Reverse **Factory setting** Reverse	In what direction should the controller influence the measured value? ▪ The measured value should increase as a result of dosing (e.g. heating) --> "Reverse" ▪ The measured value should decrease as a result of dosing (e.g. cooling) --> "Direct"

A 1-sided controller has a unipolar manipulated variable, i.e. it can only influence the process in one direction. If the controller should increase the process value, set "Reverse" as the effective direction. The controller then becomes active when the process value is too small (range A).
With the "Direct" effective direction, the controller acts as a "downwards controller". It becomes active when the process value (e.g. the temperature) is too high (range B).

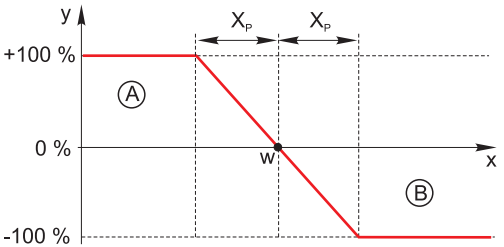

The red curve shows overlap between the curves of the two 1-sided controllers.

Path: Menu/Setup/Additional functions/Controller 1 or Controller 2

Function	Options	Info
▶ Controlled variable		
Source of data	Options ▪ Sensors ▪ Current inputs ▪ Fieldbus signals ▪ Binary inputs ▪ Mathematical functions **Factory setting** None	Specify the input or output which should be the source of data for the controlled variable.
Measured value	Options ▪ None ▪ Depends on theSource of data **Factory setting** None	Specify the measured value that should be your controlled variable. The measured value you can select depends on the option selected under "Source of data".
▶ Setpoint		Not available if a fieldbus has been selected as the "Source of data"
Setpoint	**Range of adjustment and factory setting** Depends on the "Source of data"	Specify the setpoint for the controlled variable.

Path: Menu/Setup/Additional functions/Controller 1 or Controller 2

Function	Options	Info
▶ Disturbance variable		optional, activation code necessary

With "flowing medium" (inline) controls, it can happen that the flow rate is non-constant. In some circumstances, strong fluctuations are possible. In the case of a settled control system in which the flow rate is suddenly halved, it is desirable that the dosed quantity from the controller is also directly halved. In order to achieve this type of "flow-rate-proportional" dosing, this task is not left to the I-component of the controller, but rather one enters the (to be measured) flow rate as disturbance variable z multiplicative at the controller output.

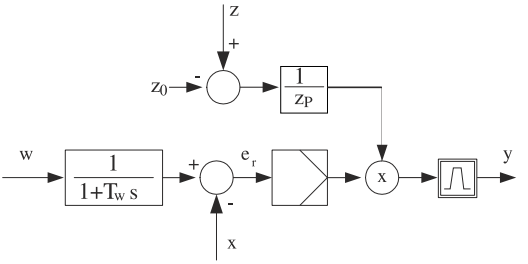

Strictly speaking, feedforward control involves an open-loop control system, since its effect is not measured directly. That means that the feed flow is directed exclusively forward. Hence the designation "feedforward control."
For the additive feedforward control that is alternatively available in the device, the (standardized) disturbance variable is added to the controller actuating variable. This enables you to set up a type of variable base load dosing.
The standardization of the disturbance variable is required both for multiplicative and for additive feedforward control and is done using parameters Z_0 (zero point) and Z_p (proportional band): $z_n = (z - z_0)/z_p$

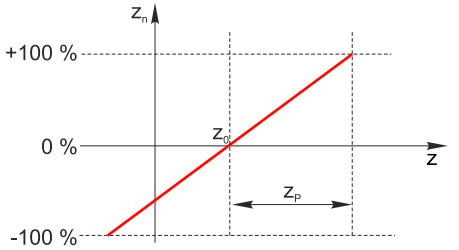

Example:
Flowmeter with measuring range 0 ... 200 m^3/ h
The controller would currently dose 100% without feedforward control.
The feedforward control should be configured such that at z = 200m^3/h, the controller still doses at 100% (z_n = 1). If the flow rate drops, the dosing rate should be reduced, and at a flow rate of less than 4 m^3/h, dosing should stop entirely (z_n = 0).
--> Select the zero point z_0 = 4 m^3/h and the proportional band Z_p= 196 m^3/h.

Function	**Options** ▪ Off ▪ Multiply ▪ Add **Factory setting** Off	Selecting multiplicative or additive feedforward control

Path: Menu/Setup/Additional functions/Controller 1 or Controller 2

Function	Options	Info
Source of data	Options ▪ Sensors ▪ Current inputs ▪ Fieldbus signals ▪ Binary inputs ▪ Mathematical functions **Factory setting** None	Specify the input or output which should be the source of data for the disturbance variable.
Measured value	Options ▪ None ▪ Depends on theSource of data **Factory setting** None	Specify the measured value that should be your disturbance variable. The measured value you can select depends on the option selected under "Source of data".
Zp	Range of adjustment depending on the selection of the measured value	Proportional band -->
Z0		Zero point
▶ Parameters		

The Liquiline PID controller has been implemented in the serial structural form, i.e. it has the following parameters:
- Integral action time T_n
- Derivative action time T_v
- Proportional band X_p

You can also configure the following for Setup Level="Advanced":
- Time constant T_{wu}
- Time constant Alpha
- Width of the neutral zone X_n
- Width of the hysteresis range of the neutral zone X_{hyst}
- Cycle time of the controller

Tn	0.0 to 9999.0 s **Factory setting** 0.0 s	The integral action time specifies the effect of the I-value If Tn > 0, then the following holds true: Clock < Twu < 0.5(Tn + Tv)

The integral action time is the time needed in a step-function response to achieve a change in the manipulated variable - as a result of the I effect - which has the same magnitude as the P-value.

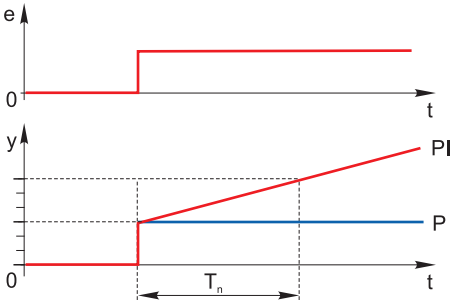

e = control deviation, e=w-x (setpoint controlled variable)

Path: Menu/Setup/Additional functions/Controller 1 or Controller 2

Function	Options	Info
Twu	0.1 to 999.9 s **Factory setting** 20.0 s	Time constant for anti-windup feedback The lower the value the greater the integrator inhibition. Exercise extreme caution when making changes. Clock < Twu < 0.5(Tn + Tv)
Tv	0.0 to 9999.0 s **Factory setting** 0.0 s	The derivative action time specifies the effect of the D-value
The derivative action time is the time by which the ramp response of a PD controller reaches a specific value of the manipulated variable at an earlier stage than it would solely as a result of its P-value. 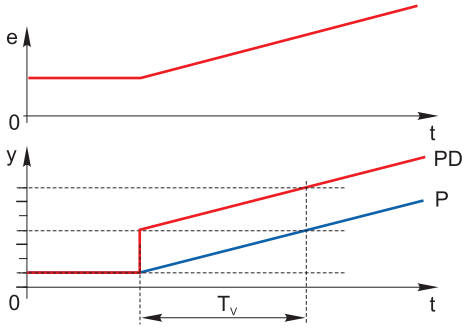 		
alpha	0.0 to 1.0 **Factory setting** 0.3	Affects the additional damping filter of the D-controller. The time constant is calculated from alpha * T_v.
Process balance *Controller type="PID 2-sided"*	Options ▪ Symmetric ▪ Asymmetric **Factory setting** Symmetric	**Symmetric** There is only one control gain and this applies for both sides of the process. **Asymmetric** You can set the control gain individually for both sides of the process.
Xp *Process balance="Symmetric"*	**Range of adjustment and factory setting** Depends on the "Source of data"	Proportional band, reciprocal value of the proportional gain K_p As soon as X deviates more than X_p from the set point, Y reaches 100%.
Xp Low Xp High	**Range of adjustment and factory setting** Depends on the "Source of data"	*Process balance="Asymmetric"*

Path: Menu/Setup/Additional functions/Controller 1 or Controller 2

Function	Options	Info
Xn *Process balance="Symmetric"*	**Range of adjustment and factory setting** Depends on the "Source of data"	Tolerance range about the setpoint that prevents minor oscillations about the setpoint if using two-sided control loops.
XN Low XN High	**Range of adjustment and factory setting** Depends on the "Source of data"	*Process balance="Asymmetric"*
XHyst	0.0 to 99.9 % **Factory setting** 0.0 %	Width of the hysteresis range of the neutral zone, relative component of Xn
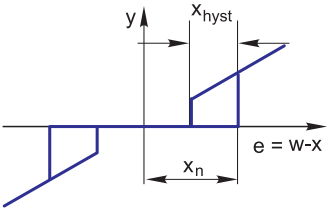 The graphic illustrates the manipulated variable (with a pure P-controller) over the control deviation e (set point minus controlled variable). Very low control deviations are set to zero. Control deviations > X_n are processed "in the normal way". Via X_{hyst} it is possible to configure a hysteresis to suppress oscillations at the edges.		
Clock	0.333 to 100.000 s **Factory setting** 1.000 s	**Expert setting!** Only change the cycle time of the controller if you know exactly what you are doing! Clock < Twu < 0.5(Tn + Tv)
Max Y change rate /s	0.00 to 1.00 **Factory setting** 0.40	Limits the change of the output variable
▶ Hold behavior		Hold=measured value is no longer reliable
Manipulated Variable	Options ▪ Freeze ▪ Set to zero **Factory setting** Freeze	How should the controller react to a measured value that is no longer reliable? **Freeze** The manipulated variable is frozen at the current value **Set to zero** Manipulated variable is set to 0 (no dosing)
State	Options ▪ Freeze ▪ Reset **Factory setting** Freeze	Internal controller status **Freeze** No change **Reset** After a hold, the control system starts from scratch, and settling time takes place again.

Path: Menu/Setup/Additional functions/Controller 1 or Controller 2

Function	Options	Info
▶ Manual mode		
Y	-100 to 100 % **Factory setting** 0 %	Editable manipulated variable, which is output in the manual mode.
Y Actual output	Read only	Manipulated variable actually output: Input manually for "Control" = "Manual mode", calculated by the controller for Control" = "Automatic"
Setpoint	Read only	Configured setpoint (damped) If the controller is running and the set point is reconfigured, here you can see how the (effective) set point gradually moves towards the new value.
X		Current measured value
▶ Output selection		Goes to the "Outputs" menu --> "Outputs" section

17.3 Cleaning programs

⚠ CAUTION

The cleaning system is not switched off during calibration or maintenance activities

Risk of injury due to medium or cleaning agent

- ▶ If a cleaning system is connected, switch it off before removing a sensor from the medium.
- ▶ If you are not switching off the cleaning system because you wish to test the cleaning function, wear protective clothing, goggles and gloves or take other appropriate measures.

Path: Menu/Setup/Additional functions/Cleaning/Cleaning 1 to 4

Function	Options	Info
Cleaning type	Options ▪ Standard clean ▪ Chemoclean **Factory setting** Standard clean	
Cleaning time	5 to 600 s **Factory setting** 10 s	Cleaning time... Cleaning duration The cleaning duration and interval depend on the process and sensor. Determine the variables empirically or based on experience.
Cleaning interval	00-00:01 to 07-00:00 (DD-hh:mm) **Factory setting** 01-00:00	The interval value can be between 1 minute and 7 days. Example: You have set the value "01-00:00". Each day, the cleaning cycle starts at the same time you started the first cleaning cycle.
Hold	Options ▪ On ▪ Off **Factory setting** Off	Decide whether there should be a hold for the assigned sensor during the cleaning process.
▶ Output selection		Goes to the "Outputs" menu You can assign the cleaning program directly to one or more outputs. --> "Outputs" section
▷ Start cycle	Action	Start the cyclical cleaning process with the settings above
▷ Start manually	Action	Start an individual cleaning process If cyclical cleaning is enabled, there are times in which it is not possible to manually start the process.
▷ Stop	Action	End the cleaning process (cyclically or manually)
State of cleaning	Read only	Indicates whether cleaning is currently taking place or not
Time to next clean	Read only	Countdown to the next cleaning process (only if cyclical cleaning has been started)

17.4 Mathematical functions

In addition to "real" process values which are delivered by analog inputs or physical sensors connected to the device, you can also calculate a maximum of 6 "virtual" process values using mathematical functions.

The "virtual" process values can be:
- Output via a current output or a fieldbus
- Used as a controlled variable
- Assigned as a measured variable to a limit contactor
- Used as a measured variable to trigger cleaning
- Displayed in user-defined measuring menus

17.4.1 Difference

You can subtract the measured values of two sensors and use the result to detect incorrect measurements, for example.
To calculate a difference, you must use two measured values with the same engineering unit.

Path: Menu/Setup/Additional functions/Mathematical functions/MF 1 to 6/Mode/Difference

Function	Options	Info
Calculation	Options ▪ Off ▪ On **Factory setting** Off	On/off switch for the function
Y1	The options depend on the sensors connected	Select the sensors and the measured variables that should be used as the minuend (Y1) or subtrahend (Y2).
Measured value		
Y2		
Measured value		
Difference value	Read only	View this value in a user-defined measuring screen or output the value via the current output.

17.4.2 Redundancy

Use this function to monitor two or three sensors with redundant measurements. The arithmetic average of the two closest measured values is calculated and output as the redundancy value.

Path: Menu/Setup/Additional functions/Mathematical functions/MF 1 to 6/Mode/Redundancy

Function	Options	Info
Calculation	Options ▪ Off ▪ On **Factory setting** Off	On/off switch for the function
Y1	The options depend on the sensors connected	You can select different types of sensor that output the same measured value. **Example for temperature redundancy:** You have a pH sensor and an oxygen sensor at inputs 1 and 2. Select both as "Y1" and "Y2". For "Measured value" select the temperature.
Measured value		
Y2		
Measured value		
Y3 (optional)		
Measured value		
Deviation control	Options ▪ Off ▪ On **Factory setting** Off	You can monitor the redundancy. Specify an absolute limit value that may not be exceeded.
Deviation limit	Depends on the selected measured value	
Redundancy	Read only	View this value in a user-defined measuring screen or output the value via the current output.

17.4.3 rH value

To calculate the rH value, a pH sensor and an ORP sensor must be connected. It is irrelevant whether you are using a pH glass sensor, an ISFET sensor or the pH electrode of an ISE sensor.

Path: Menu/Setup/Additional functions/Mathematical functions/MF 1 to 6/Mode/rH calculation

Function	Options	Info
Calculation	Options ▪ Off ▪ On **Factory setting** Off	On/off switch for the function
pH source	Connected pH sensor	Set the input for the pH sensor and the input for the ORP sensor. Measured value interrogation is obsolete as you must select pH or ORP mV.
Redox source	Connected ORP sensor	
Calculated rH	Read only	View this value in a user-defined measuring screen or output the value via the current output.

17.4.4 Degassed conductivity

Carbon dioxide from the air can be a contributing factor to the conductivity of a medium. The degassed conductivity is the conductivity of the medium excluding the conductivity caused by carbon dioxide.

In the power station industry, for example, it is advantageous to use the degassed conductivity:
- The percentage of conductivity caused by corrosion products or fouling in the feed water can be determined as early as when the turbines are started. The system excludes the initially high conductivity values resulting from the ingress of air.
- If carbon dioxide is regarded as non-corrosive, the live steam can be directed to the turbine far earlier during startup.
- If the conductivity value increases during normal operation, it is possible to immediately determine an ingress of coolant or air by calculating the degassed conductivity.

Path: Menu/Setup/Additional functions/Mathematical functions/MF 1 to 6/Mode/Degassed conductivity

Function	Options	Info
Calculation	Options ▪ Off ▪ On **Factory setting** Off	On/off switch for the function
Cation conductivity	Connected conductivity sensor	"Cation conductivity" is the sensor downstream from the cation exchanger and upstream from the "degassing module", "Degassed conductivity" is the sensor at the outlet of the degassing module. Measured value interrogation is obsolete as you can only choose conductivity.
Degassed conductivity	Connected conductivity sensor	
CO2 concentration	Read only	View this value in a user-defined measuring screen or output the value via the current output.

17.4.5 Dual conductivity

You can subtract two conductivity values and use the result, for example, to monitor the efficiency of an ion exchanger.

Path: Menu/Setup/Additional functions/Mathematical functions/MF 1 to 6/Mode/Dual conductivity

Function	Options	Info
Calculation	Options ▪ Off ▪ On **Factory setting** Off	On/off switch for the function
Inlet	The options depend on the sensors connected	Select the sensors that should be used as the minuend (Inlet, e.g. sensor upstream from the ion exchanger) and subtrahend (Outlet, e.g. sensor downstream from the ion exchanger).
Measured value		
Outlet		
Measured value		
Main value format	Options ▪ Auto ▪ # ▪ #.# ▪ #.## ▪ #.### **Factory setting** Auto	
Cond. unit	Options ▪ Auto ▪ µS/cm ▪ mS/cm ▪ S/cm ▪ µS/m ▪ mS/m ▪ S/m **Factory setting** Auto	
Dual conductivity	Read only	View this value in a user-defined measuring screen or output the value via the current output.

17.4.6 Calculated pH value

The pH value can be calculated from the measured values of two conductivity sensors under certain conditions. Areas of application include power stations, steam generators and boiler feedwater.

Path: Menu/Setup/Additional functions/Mathematical functions/MF 1 to 6/Mode/pH calculation from conductivity

Function	Options	Info
Calculation	Options ▪ Off ▪ On **Factory setting** Off	On/off switch for the function
Method	Options ▪ NaOH ▪ NH3 ▪ LiOH **Factory setting** NaOH	The calculation is performed on the basis of Guideline VGB-R-450L of the Technical Association of Large Power Plant Operators (Verband der Großkesselbetreiber, (VGB)). **NaOH** $pH = 11 + \log \{(\kappa_v - 1/3\ \kappa_h)/273\}$ **NH3** $pH = 11 + \log \{(\kappa_v - 1/3\ \kappa_h)/243\}$ **LiOH** $pH = 11 + \log \{(\kappa_v - 1/3\ \kappa_h)/228\}$ κ_v ... "Inlet" ... direct conductivity κ_h ... "Outlet" ... acid conductivity
Inlet Outlet	Choice of conductivity sensor	Inlet Sensor upstream from the cation exchanger, "direct conductivity" Outlet Sensor downstream from the cation exchanger, "acid conductivity" The choice of measured value is obsolete since it must always be "Conductivity".
Calculated pH	Read only	View this value in a user-defined measuring screen or output the value via the current output.

17.5 Measuring range switch

A measuring range switching (MRS) configuration includes the following options for each of the four binary input states:
- Mode of operation (conductivity or concentration)
- Concentration table
- Temperature compensation
- Current output turndown
- Limit contactor range

If an MRS set is assigned to a channel and MRS is enabled for this set, the measuring range configuration selected via the binary inputs is used instead of the normal configuration of the linked sensor channel. So that the current outputs and limit contactors are controlled by the MRS, these must be linked with the MRS set, not with the measuring channel.
Current outputs and limit contactors that are connected to an MRS set receive the measured value corresponding to the mode of operation as well as the corresponding turndown or range for limit value monitoring. A limit contactor connected to an MRS set always uses the "Out of range check" mode, i.e. it switches if the value is outside the configured range. If a current output or limit contactor is connected to an MRS set, the turndown, monitoring range and limit contactor mode can no longer be configured manually. Therefore, these options are hidden in the current output menu and limit contactor menu.

Example: CIP cleaning in a brewery

	Beer	**Water**	**Base**	**Acid**
Binary input 1	0	0	1	1
Binary input 1	0	1	0	1
	Measuring range 00	Measuring range 01	Measuring range 10	Measuring range 11
Operating mode	Conductivity	Conductivity	Concentration	Concentration
Conc. Table	-	-	NaOH 0..15%	User table 1
Compensation	User table 1	Linear	-	-
Current output				
Range lower value	1.00 mS/cm	0.1 mS/cm	0.50 %	0.50 %
Range upper value	3.00 mS/cm	0.8 mS/cm	5.00 %	1.50 %
Limit switches				
Range lower value	2.3 mS/cm	0.5 mS/cm	2.00 %	1.30 %
Range upper value	2.5 mS/cm	0.7 mS/cm	2.10 %	1.40 %

Path: Menu/Setup/Additional functions/Measuring range switch

Function	Options	Info
▶ MRS set 1 ▶ MRS set 2		If you enter both activation codes, you have two independent parameter sets available for measuring range switching. The submenus are the same for both sets.
MRS	Options ▪ On ▪ Off **Factory setting** Off	Switches the function on or off
Sensor	Options ▪ None ▪ Connected, inductive conductivity sensors **Factory setting** None	This function can be used on inductive conductivity sensors only.
Binary input 1 Binary input 2	Options ▪ None ▪ Binary inputs ▪ Fieldbus signals ▪ Limit switch **Factory setting** None	Source of the switching signal, can be selected for input 1 and 2 in each case
Sensor = inductive conductivity sensor		
▶ Measuring range 00 ▶ Measuring range 01 ▶ Measuring range 10 ▶ Measuring range 11		Select the MRSs; a maximum of 4 are possible. The submenus are identical for each and thus are displayed only once.
Operating mode	Options ▪ Conductivity ▪ Concentration **Factory setting** Conductivity	

Path: Menu/Setup/Additional functions/Measuring range switch

Function	Options	Info
Conc. Table	Options ▪ NaOH 0..15% ▪ HCl 0..20% ▪ HNO3 0..25% ▪ HNO3 24..30% ▪ H2SO4 0..28% ▪ H2SO4 40..80% ▪ H2SO4 93..100% ▪ H3PO4 0..40% ▪ NaCl 0..26% ▪ User table 1 ▪ User table 2 ▪ User table 3 ▪ User table 4 **Factory setting** NaOH 0..15%	Concentration tables saved at the factory: NaOH: 0 to 15%, 0 to 100 °C (32 to 212 °F) HCl: 0 to 20%, 0 to 65 °C (32 to 149 °F) HNO_3: 0 to 25%, 2 to 80 °C (36 to 176 °F) H_2SO_4: 0 to 28%, 0 to 100 °C (32 to 212 °F) H_2SO_4: 40 to 80%, 0 to 100 °C (32 to 212 °F) H_2SO_4: 93 to 100%, 0 to 100 °C (32 to 212 °F) H_3PO_4: 0 to 40%, 2 to 80 °C (36 to 176 °F) NaCl: 0 to 26%, 2 to 80 °C (36 to 176 °F)
Compensation	Options ▪ None ▪ Linear ▪ NaCl (IEC 746-3) ▪ Water ISO7888 (20°C) ▪ Water ISO7888 (25°C) ▪ UPW NaCl ▪ UPW HCl ▪ User table 1 ▪ User table 2 ▪ User table 3 ▪ User table 4 **Factory setting** Linear	Various methods are available to compensate for the temperature dependency. Depending on your process, decide which type of compensation you want to use. Alternatively, you can also select "None" and thus measure uncompensated conductivity.
▶ Current output		
Range lower value	0 to 100 %	*Operating mode = "Concentration"*
Range upper value		
Range lower unit	Options ▪ S/m ▪ µS/cm ▪ mS/cm ▪ S/cm ▪ µS/m ▪ mS/m **Factory setting** mS/cm	*Operating mode = "Conductivity"* Define the units and range limits for the output values.
Range lower value	Enter value	
Range upper unit	Enter value	
Range upper value	Enter value	

Path: Menu/Setup/Additional functions/Measuring range switch

Function	Options	Info
▶ Limit switches		
Range lower value	0 to 100 %	*Operating mode = "Concentration"*
Range upper value		
Range lower unit	Options ▪ S/m ▪ µS/cm ▪ mS/cm ▪ S/cm ▪ µS/m ▪ mS/m **Factory setting** mS/cm	*Operating mode = "Conductivity"* Define the units and range limits for the output values.
Range lower value	Enter value	
Range upper unit	Selection and factory setting as for "Range lower unit"	
Range upper value	Enter value	

18 Communication

18.1 Web server

18.1.1 Connection

▶ Connect the PC communication cable to the RJ45 port of module 485.

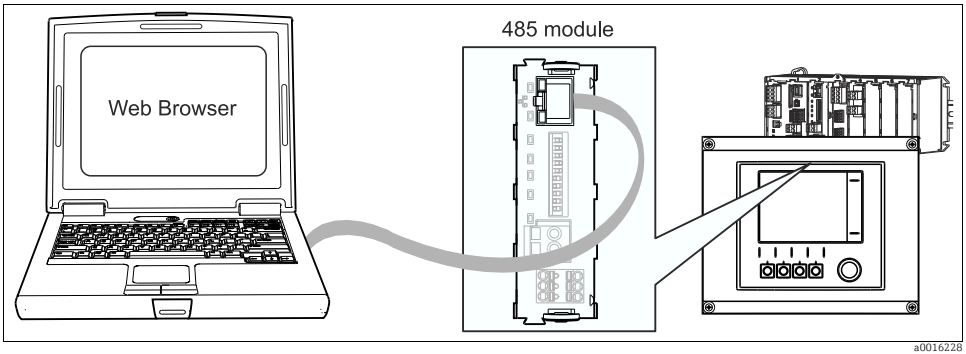

Fig. 17: Ethernet connection

18.1.2 Creating the data connection

1. Start your PC.
2. First, set a manual IP address in the network connection settings of the operating system.
   ↳ This address must be in the same subnetwork as the IP address of the device.

   Example:

   - IP address Liquiline: 192.168.1.212 (Diagnostics/System information/Ethernet/IP-Address)
   - IP address for the PC: 192.168.1.**213**
3. Start the Internet browser.

If you use a proxy server to connect to the Internet:

4. Disable the proxy (browser settings under "Connections/LAN settings").
5. Enter the IP address of your device in the address line.
   ↳ The system takes a few moments to establish the connection and then the CM44 web server starts.

- Enter the following address(es) to download logbooks:
  - 192.168.1.212/logbooks_csv.fhtml (for logbooks in CSV format)
  - 192.168.1.212/logbooks_fdm.fhtml (for logbooks in FDM format)

Downloads in FDM format can be securely transmitted, saved and visualized with Endress+Hauser's "Field Data Manager Software".
(--> www.products.endress.com/ms20)

18.1.3 Operation

The menu structure of the web server corresponds to the onsite operation.

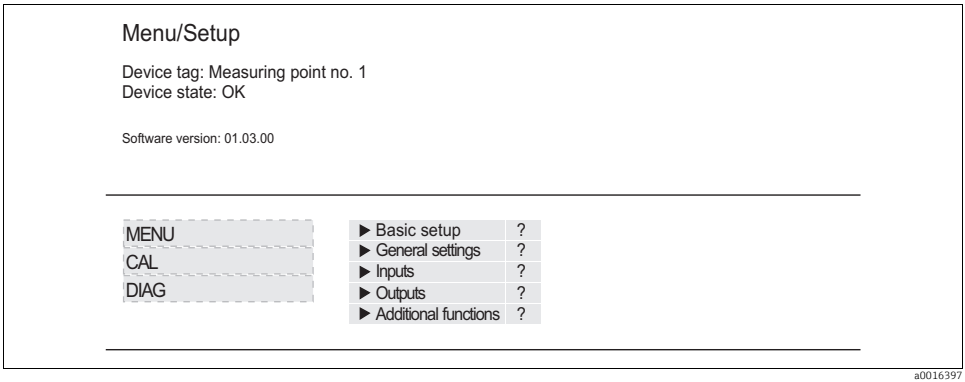

Fig. 18: Example of web server (menu/language=English)

- Clicking a menu name or a function corresponds to pressing the navigator.
- You can make your settings conveniently via the computer keyboard.

Instead of using an Internet browser, you can also use FieldCare for configuration via ethernet. The ethernet DTM required for this purpose can be downloaded from the product page.

18.2 Service interface

You can connect the device to a computer via the service interface and configure it using "Fieldcare". Furthermore, configurations can also be saved, transferred and documented.

18.2.1 Connection

- ▶ Connect the service connector to the interface on the Liquiline basic module and connect it to the Commubox.
- ▶ Via the USB port, connect the Commubox to the computer running the Fieldcare software.

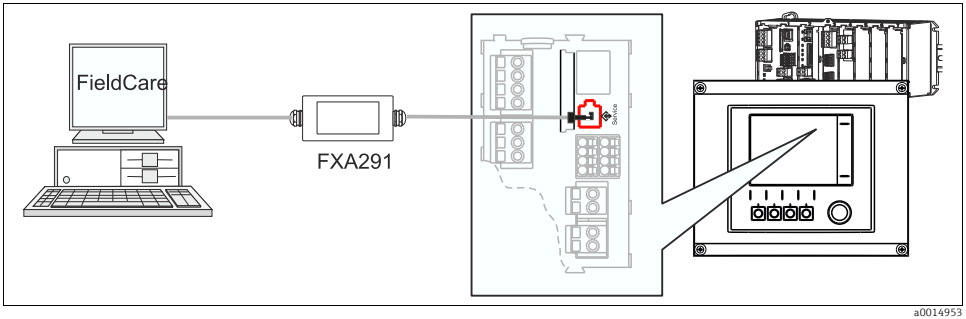

Fig. 19: Connection overview

18.2.2 Creating the data connection

1. Start Fieldcare.
2. Establish a connection to the Commubox. For this, select the ComDTM "CDI Communication FXA291"
3. Then select the DTM for CM442/CM444/CM448 and start the configuration.

You can now start online configuration via the DTM.
Online configuration competes with onsite operation, i.e. each of the two options blocks the other one. On both sides it is possible to take away access from the other side.

A video showing an example of how to set up a connection to CM44x is available on the CD.

18.2.3 Operation

- In the DTM the menu structure corresponds to the onsite operation. The functions of the Liquiline soft keys are found in the main window on the left.
- Clicking a menu name or a function corresponds to pressing the navigator.
- You can make your settings conveniently via the computer keyboard.
- Via Fieldcare, you can save logbooks, make backups of configurations and transfer the configurations to other devices.
- You can also print out configurations or save them as PDFs.

18.3 Fieldbuses

18.3.1 HART

You can communicate using the HART protocol via current output 1.

- ▶ Connect the HART modem or handheld to current output 1 (communication load 230 - 500 Ohm).
- ▶ Establish the connection via your HART device.
- ▶ Operate Liquiline via the HART device. To do so, follow the instructions in the manual.

All the information on HART communication is provided on the CD (BA00486C).

18.3.2 PROFIBUS-DP

With the fieldbus module 485 and the appropriate device version, you can communicate via PROFIBUS DP.
Connect the PROFIBUS data cable to the terminals of the fieldbus module as described (--> BA00444C "Commissioning").

All the information on PROFIBUS communication is provided on the CD (SD01188C).

18.3.3 Modbus

With the fieldbus module 485 and the appropriate device version, you can communicate via Modbus RS485 or Modbus TCP.
Connect the Modbus data cable to the terminals of the fieldbus module (RS 485) or to the RJ45 (TCP) port as described (--> BA00444C "Commissioning").

All the information on Modbus communication is provided on the CD (SD01189C).

Index

A

Activation code 19
Additional functions
  Cleaning programs 131
  Controller 121
  Limit switch 116
  Mathematical functions 132
Advanced setup
  Ethernet 15
  Modbus 15
  PROFIBUS DP 14
Alarm relay
  Cleaning 106
  Controller 103
  Diagnostics message 105
  Limit switch 102
Automatic hold 8

B

Basic settings 6
  Chlorine 58
  Conductivity 38
  Interface measurement 92
  ISE 82
  Nitrate 77
  Oxygen 48
  pH/ORP 28
  SAC 72
  Turbidity 67
Binary inputs and outputs 108
Bus address 13

C

Calibration settings
  Chlorine 61
  ISE 87
  Nitrate 79
  Oxygen 51
  pH/ORP 30
  SAC 74
  Turbidity 69
Calibration timer 23, 88
Calibrations
  Cap, chlorine 64
Calibrations, cap 55
Cap
  Calibrations 55
  Chlorine calibrations 64
  Sterilizations 55
Cell constant 38
Chloride compensation 85
Chlorine
  Basic settings 58
  Calibration settings 61
  Diagnostics settings 62
  Extended setup 59
  Main value 58
  Medium compensation 60
  Unit 59
Cleaning 22
Cleaning programs 131
Communication
  Fieldbus 145
  HART 145
  Modbus 145
  PROFIBUS-DP 145
  Service interface 144
  Web server 142
Conductivity
  Diagnostics settings 44
  Extended setup 44
  Format 41
  Temperature format 44
  Unit 41
Connection
  Service interface 144
  Web server 142
Controller 103, 121
Controller structure 121
Creating a connection
  Service interface 144
  Web server 142
Current inputs 98

D

Damping 21, 82
Data management
  Activation code 19
  Exporting the setup 18
  Firmware update 17
  Loading the setup 18
  Saving the setup 17
Data processing 27
Date and time 7
Delta slope
  Chlorine 62
  ISE 90
  Oxygen 53
  pH 36
Delta zero point
  Chlorine 63
  ISE 90
  Oxygen 54
  pH 36
Device variables 106
  PROFIBUS 107
Diagnostics settings 12
  Chlorine 62
  Chlorine slope 62
  Conductivity 44
  Delta slope chlorine 62
  Delta slope ISE 90
  Delta slope oxygen 53
  Delta slope pH 36
  Delta zero point chlorine 63
  Delta zero point ISE 90
  Delta zero point oxygen 54
  Delta zero point pH 36
  Diagnostic behavior 25
  Interface 97
  ISE 89
  Nitrate 79
  Operating hours conductivity 45
  Operating hours ISE 91
  Operating hours oxygen 56
  Operating hours pH/ORP 35
  Operating hours, chlorine 64
  Operating hours, nitrate 80
  Operating hours, SAC 75
  Operating hours, turbidity 69
  Oxygen 53
  pH/ORP 31
  Polarization detection 46
  Process check system 44
  SAC 74
  Sensor check system 32
  Sensor condition check 34
  Slope ISE 89
  Slope oxygen 53
  Slope pH 33
  Turbidity 69
  Zero point chlorine 63
  Zero point ISE 89
  Zero point Oxygen 54
  Zero point pH 33

E

Electrode slot 84
Electrolyte counter 65
EP 47
Ethernet 15
Extended setup
  Chlorine 59
  Conductivity 44
  Data management 17
  Diagnostics settings 12
  HART bus address 13
  Interface 95
  ISE 83, 86
  Nitrate 78
  Oxygen 49
  pH/ORP 29
  SAC 73
  Turbidity 68

F

Factory setting
  Data processing 27
  Sensor 27
Fieldbus 145
Firmware update
  Controller 17

G

General settings
  Automatic hold 8
  Basic settings 6
  Date and time 7
  Extended setup 12
  Logbooks 9

H

HART 106, 145

I

Inputs
Binary 111
Chlorine 58
Conductivity 38
General 21
Interface 92
ISE 82
Nitrate 77
Oxygen 48
pH/ORP 28
SAC 72
Turbidity and solids 67
Installation factor 39
Interface
Alarm delay 97
Calculation 96
Diagnostics settings 97
Extended setup 95
Sensor signal 94–95
Signal restart 97
Tank configuration 93
Interface measurement
Basic settings 92
ISE
Basic settings 82
Calibration settings 87
Compensation K and Cl 85
Diagnostics settings 89
Electrode slot 84
Extended setup 83, 86
Main value 82
Membrane timer 86
Standard addition 88

L

Laplace representation 121
Limit switch 102, 116
Logbooks 9

M

Main value
Chlorine 58
ISE 82
Oxygen 48
Manual hold 22
Mathematical functions
Degassed conductivity 135
Difference 132
Dual conductivity 136
pH calculation 137
Redundancy 133
rH value 134
Measured value formats
Nitrate 78
SAC 73
Turbidity 68
Measuring range switch 138
Medium compensation
Chlorine 60
Oxygen 50, 52
pH 29
Membrane timer 86
Modbus 15, 145
Modbus RS485 107
Modbus TCP 107

N

Nitrate
Basic settings 77
Calibration settings 79
Diagnostics settings 79
Extended setup 78
Formats 78
Stability criteria 79

O

Operating hours
- Chlorine 64
- Conductivity 45
- ISE 91
- Nitrate 80
- Oxygen 56
- pH/ORP 35
- SAC 75
- Turbidity 69

Operating mode 38
Operation
- Via service interface 145
- Via web server 143

Outputs
- Alarm relay 102
- binary 113
- Current outputs 99
- Relay (optional) 102

Oxygen
- Basic settings 48
- Calibration settings 51
- Diagnostics settings 53
- Extended setup 49
- Main value 48
- Temperature compensation 49
- Unit 49

P

pH/ORP
- Basic settings 28
- Calibration settings 30
- diagnostics settings 31
- Extended setup 29
- Tag control 27

Pharmaceutical water 47
Polarization detection 46
Potassium compensation 85
Process check system 24, 44
PROFIBUS
- Device variables 107
- PROFIBUS variables 107

PROFIBUS DP 14, 107
PROFIBUS-DP 145

R

Relay
- Cleaning 106
- Controller 103
- Diagnostics message 105
- Limit switch 102

S

SAC
- Basic settings 72
- Calibration settings 74
- Diagnostics settings 74
- Extended setup 73
- Formats 73
- Stability criteria 74

Sensor check system 32
Sensor condition check 34
Sensor factory setting 27
Sensor identification . 28, 38, 48, 58, 67, 72, 77, 82
Sensor replacement 27
Sensor signal 94–95
Service interface
- Connection 144
- Creating a connection 144

Setup
- Export 18
- Load 18
- Save 17

Slope
- Chlorine 62
- ISE 89
- Oxygen 53
- pH 33

Stability criteria
- Chlorine 61, 87
- Nitrate 79
- Oxygen 51
- pH/ORP 30
- SAC 74
- Turbidity 69

Standard addition 88
Sterilizations 26
Sterilizations, cap 55

T

Tag control 27
Tank configuration 93
Temperature compensation 41
  Oxygen 49
Temperature format 44
Turbidity
  Basic settings 67
  Calibration settings 69
  Diagnostics settings 69
  Extended setup 68
  Formats 68
  Stability criteria 69

U

Unit
  Chlorine 59
  Oxygen 49
USP 47

W

Web server
  Connection 142
  Creating a connection 142
  Operation 143

Z

Zero point
  Chlorine 63
  ISE 89
  Oxygen 54
  pH 33

www.addresses.endress.com

Endress+Hauser

People for Process Automation

10.16 - E1-2 – ENDRESS & HAUSER PH/ORP SENSOR

Technical Information
Orbipac CPF81D/CPF82D and CPF81/CPF82

pH/ORP compact electrodes, with digital Memosens technology or analog

For processes in mining industries and for treatment of industrial water and wastewater

Application

- Flotation
- Leaching
- Neutralization
- Outlet monitoring

Your benefits

- With patented KNO_3 electrolyte bridge for better protection against electrode poisons such as S^{2-} or CN ions
- Optionally available with flat membrane for improved wear resistance
- Threaded connection NPT ¾" top and bottom for easy installation at user end
- Suitable for measurements within pH range 0 to 14 and within temperature range 0 to 110 °C (32 to 230 °F)
- Digital pH sensors with integrated temperature sensor, analog pH electrodes with or without integrated temperature sensor
- Protection guard against damage

Other advantages of Memosens technology

- Maximum process safety owing to non-contact, inductive signal transmission
- Data security thanks to digital data transmission
- Very easy to use as sensor data saved in the sensor
- Predictive maintenance possible as sensor load data logged in the sensor

Endress+Hauser
People for Process Automation

Function and system design

Measuring principle

pH measurement
The pH value is used as a unit of measurement for the acidity or alkalinity of a liquid medium. The membrane glass of the electrode supplies an electrochemical potential which is dependent upon the pH value of the medium. This potential is generated by the selective penetration of H^+ ions through the outer layer of the membrane. An electrochemical boundary layer with an electric potential forms at this point. An integrated Ag/AgCl reference system serves as the required reference electrode. The transmitter converts the measured voltage into the corresponding pH value using the Nernst equation.

ORP measurement
The ORP potential is a unit of measurement for the state of equilibria between oxidizing and reducing components of a medium. The ORP is measured using a platinum or gold electrode instead of the pH-sensitive glass membrane. Analog to the pH measurement, an integrated Ag/AgCl reference system is used as a reference electrode.

Measuring system

A complete measuring system comprises:
- Sensor CPF81D, CPF81, CPF82D or CPF82
- Transmitter,e.g. Liquiline CM44x/R or Liquiline M CM42
- Measuring cable, e.g. CYK10 or sensor's fixed cable

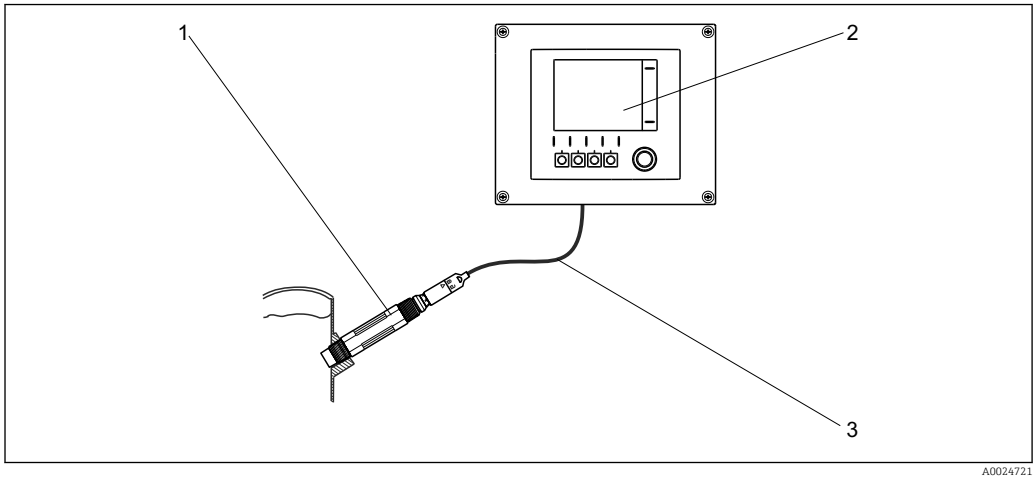

1 Example of a measuring system

1 Sensor CPF81D
2 Liquiline CM44x transmitter
3 Measuring cable CYK10

Communication and data transmission

Communication with the transmitter
Always connect digital sensors to a transmitter with Memosens technology. Data transmission to a transmitter for analog sensors is not possible.

The digital sensors are able to store the following system data in the sensor.
- Manufacturing data
  - Serial number
  - Order code
  - Date of manufacture
- Calibration data
  - Calibration date
  - Calibrated slope at 25 °C (77 °F) (CPF81D)
  - Calibrated zero point at 25 °C (77 °F) (CPF81D)
  - Calibrated offset (CPF82D, ORP mV measuring mode)
  - Slope as % (CPF82D, ORP % measuring mode)
  - Temperature offset
  - Number of calibrations
  - Serial number of the transmitter used for the last calibration
  - Calibration database (stores the last 8 calibrations in the Memosens head)
- Application data
  - Temperature application range
  - pH application range (CPF81D)
  - ORP application range (CPF82D)
  - Date of first commissioning
  - Maximum temperature value
  - Operating hours at temperatures above 80 °C (176 °F) and 100 °C (212 °F)
  - Operating hours at very low and very high pH values (Nernst voltage below -300 mV, above +300 mV)

Reliability

Dependability

Easy handling
Sensors with Memosens technology have integrated electronics that allow for saving calibration data and further information such as total hours of operation and operating hours under extreme measuring conditions. Once the sensor has been connected, the sensor data are transferred automatically to the transmitter and used to calculate the current measured value. As the calibration data are stored in the sensor, the sensor can be calibrated and adjusted independently of the measuring point. The result:
- Easy calibration in the measuring lab under optimum external conditions increases the quality of the calibration.
- Pre-calibrated sensors can be replaced quickly and easily, resulting in a dramatic increase in the availability of the measuring point .
- Maintenance intervals can be defined based on all stored sensor load and calibration data and predictive maintenance is possible.
- The sensor history can be documented on external data carriers and evaluation programs at any time. Thus, the current application of the sensors can be made to depend on their previous history.

Interference immunity

Data security thanks to digital data transmission
Memosens technology digitizes the measured values in the sensor and transmits the data to the transmitter using a non-contact connection that is free from potential interference. The result:
- Automatic error message if sensor fails or connection between sensor and transmitter is interrupted
- Immediate error detection increases measuring point availability

Safety

Maximum process safety
With inductive transmission of the measured value using a non-contact connection, Memosens guarantees maximum process safety and offers the following benefits:
- All problems caused by moisture are eliminated.
  - Plug-in connection free from corrosion
  - Measured value distortion from moisture is not possible.
  - The plug-in system can even be connected under water.
- The transmitter is galvanically decoupled from the medium. Issues concerning "symmetrical high-impedance" or "asymmetry" or an impedance converter are a thing of the past.
- EMC safety is guaranteed by screening measures for the digital transmission of measured values.

Input

Measured values

CPF81D, CPF81

pH value

Temperature

CPF82D, CPF82

ORP

Measuring range

CPF81D, CPF81

Version LH:

pH	0 ... 14
Temperature	0 to 110 °C (32 to 230 °F)

Version NN:

pH	0 to 14 (11 to 14 with reduced accuracy)
Temperature	0 to 80 °C (32 to 170 °F)

CPF82D, CPF82

-1500 mV to +1500 mV

Please note the process operating conditions.

Power supply

Electrical connection

CPF81D and CPF82D

The electrical connection of the sensor to the transmitter takes place via special measuring cable CYK10 or CYK20.

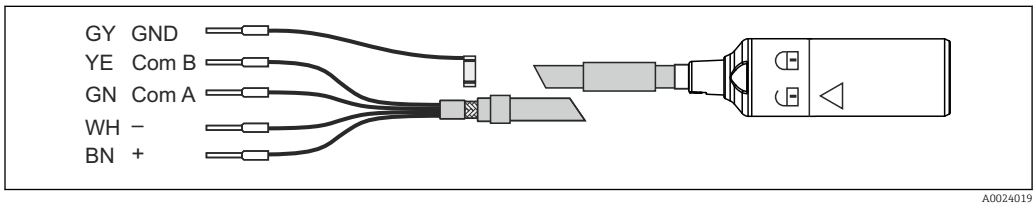

2 Measuring cable CYK10/CYK20

CPF81 and CPF82 with TOP68 plug-in head

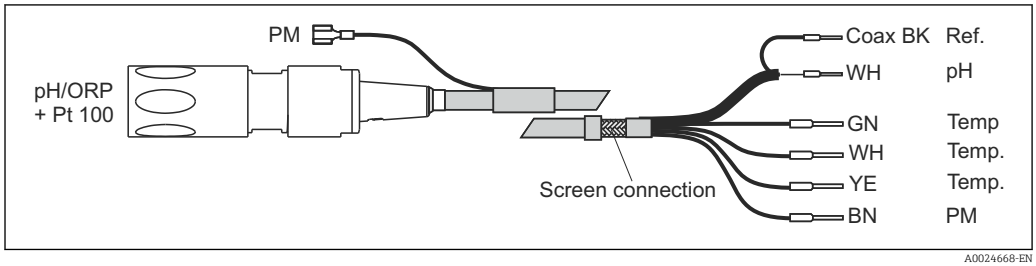

3 Measuring cable CPK9

CPF81 and CPF82 with fixed cable

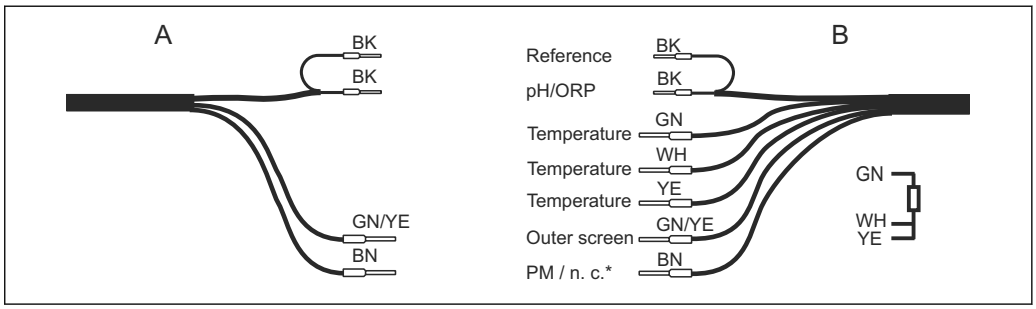

4 Fixed cable connection

A Fixed cable CPF81 without temperature sensor and CPF82
B Fixed cable CPF81 with temperature sensor
** The PML is connected only in the case of sensor versions with an internal PML (CPF81-xxx2xx)*

Installation

Installation instructions

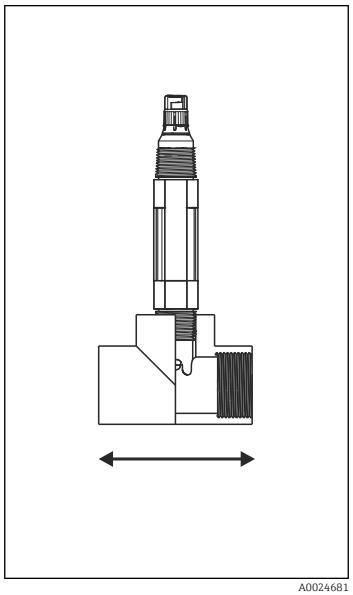

5 Flow installation

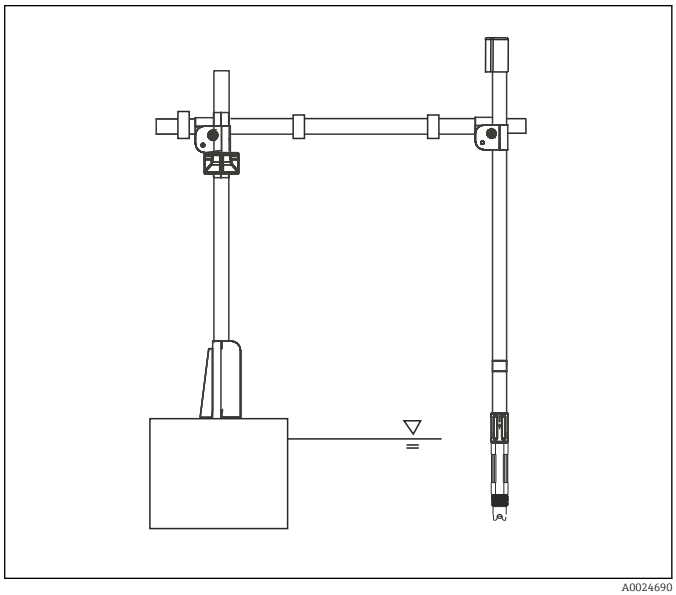

6 Immersion installation with Flexdip CYA112

Make sure to follow the installation instructions in the Operating Instructions of the used assembly.

Environment

Ambient temperature

NOTICE

Danger of frost damage

► The sensor must not be used at temperatures below 0 °C (32 °F).

Storage temperature

0 to 50 °C (32 to 120 °F)

Degree of protection

CPF81D, CPF82D

IP 68 (10 m (33 ft) head of water at 25 °C (77 °F) over 45 days, 1 mol/l KCl)

CPF81, CPF82 with TOP68 plug-in head

IP 68 (1 m (3.3 ft) water column, 50 °C (122 °F), 168 h)

CPF81, CPF82 with fixed cable

IP 67

Electromagnetic compatibility

Interference emission and interference immunity in accordance with EN 61326-1:2006, EN 61326-2-3:2006

Memosens versions
for ESD > 8 kV: reduced accuracy ±1.5 pH

Process

Process temperature

CPF81D, CPF81	
Version LH	0 to 110 °C (32 to 230 °F)
Version NN	0 to 80 °C (32 to 170 °F)
CPF82D, CPF82	0 to 80 °C (32 to 170 °F)

Process pressure

1 to 10 bar absolute, at 80 °C (15 to 145 psi absolute, at 176 °F)

Pressure temperature load curve

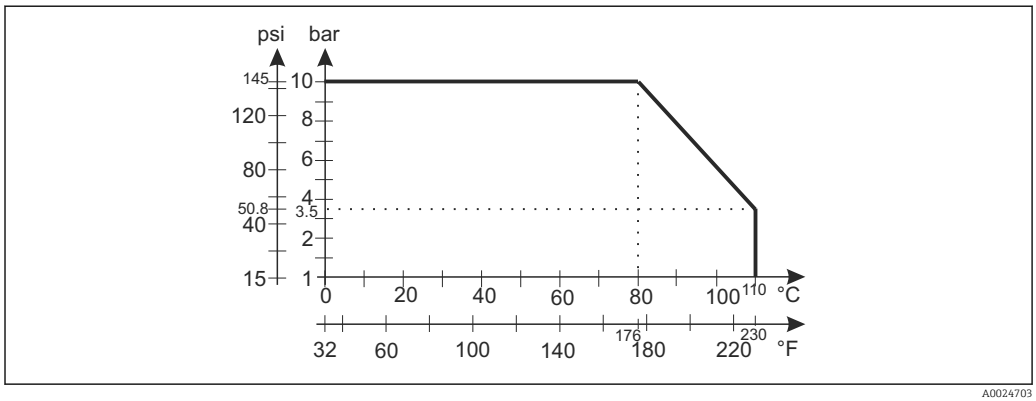

A0024703

Glass impedance

150 MΩ at 25 °C (77 °F)

Minimum conductivity

50 µS/cm

Mechanical construction

Design, dimensions

CPF81D, CPF82D

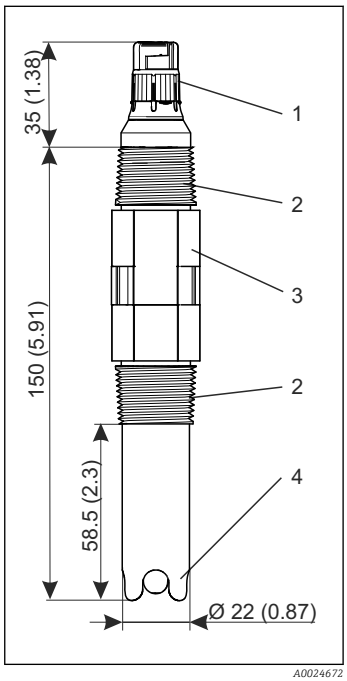

7 *CPF81D, long shaft, protection guard*

1 *Memosens plug-in head*
2 *NPT ¾" thread*
3 *Across flats AF 26*
4 *Protection guard*

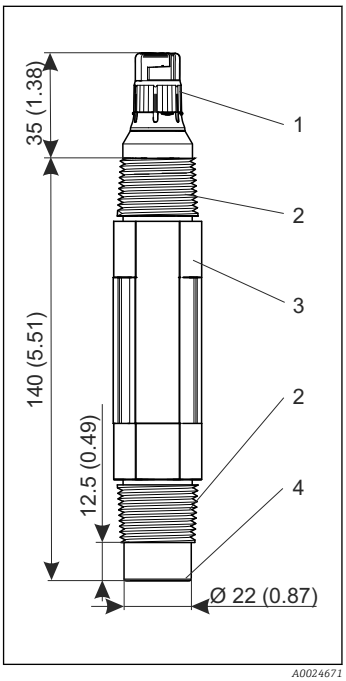

8 *CPF81D, flat membrane*

1 *Memosens plug-in head*
2 *NPT ¾" thread*
3 *Across flats AF 26*
4 *Flat membrane*

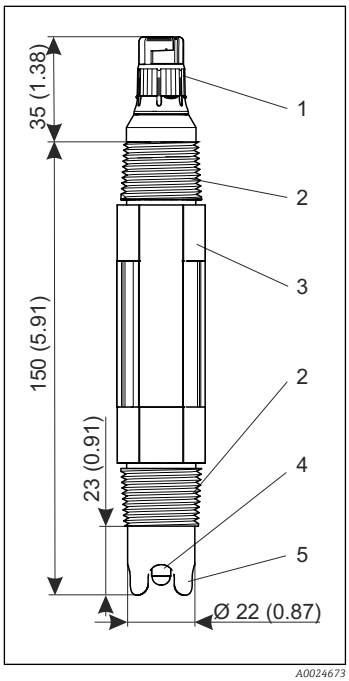

9 *CPF82D, short shaft, protection guard*

1 *Memosens plug-in head*
2 *NPT ¾" thread*
3 *Across flats AF 26*
4 *Platinum ring*
5 *Protection guard*

Dimensions in mm (inch)

CPF81, CPF82

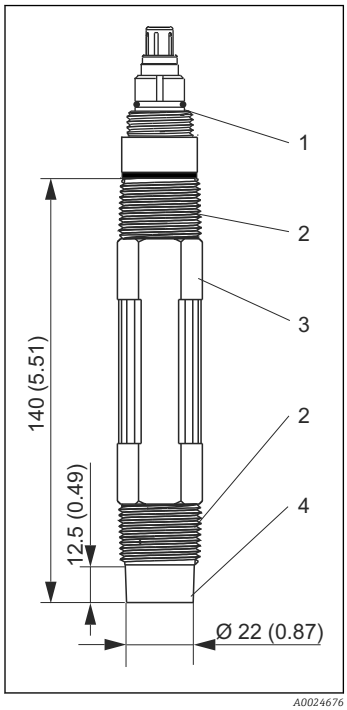

10 CPF81 with TOP68 plug-in head, short shaft, flat membrane

1 TOP68 plug-in head
2 NPT ¾" thread
3 Across flats AF 26
4 Flat membrane

Dimensions in mm (inch)

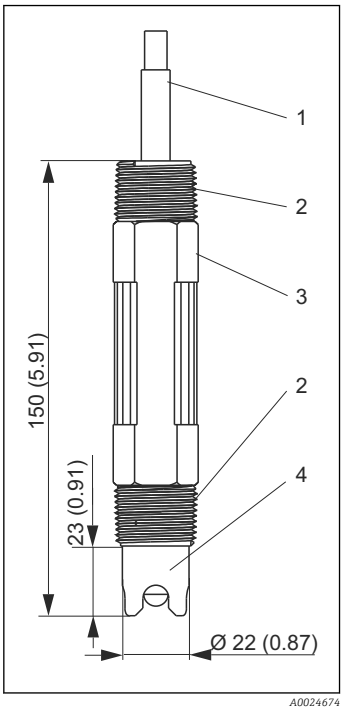

11 Fixed-cable version, short shaft, protection guard

1 Fixed cable
2 NPT ¾" thread
3 Across flats AF 26
4 Protection guard

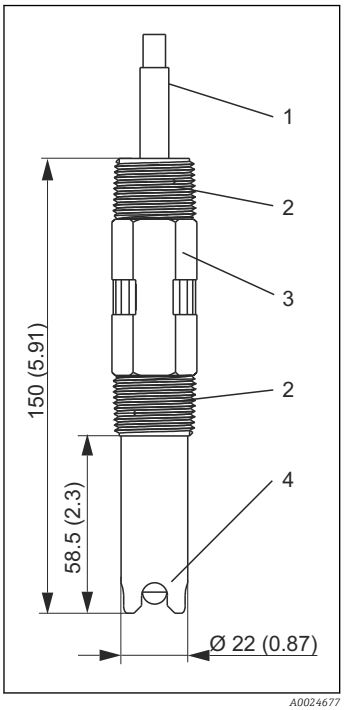

12 Fixed-cable version, long shaft, protection guard

1 Fixed cable
2 NPT ¾" thread
3 Across flats AF 26
4 Protection guard

Weight	0.12 to 0.15 kg (0.26 to 0.33 lbs, depending on version and without cable)	
Materials	Housing, electrode shaft	PPS
	pH electrode (in contact with medium)	Lead-free membrane glass, suitable for process applications
	ORP electrode (in contact with medium):	Platinum ring
	Double chamber reference system:	KNO_3 and KCl/AgCl
Process connection	NPT ¾"	
Integrated preamplifier (optional)	Structure	cast in sensor body
	Power supply	via integrated coin cells
	Reference potential:	reference electrode

With preamplifier versions, the sensor check function (SCS) of the transmitter is ineffective and should be turned off.

Certificates and approvals

Ex approval (optional)	FM IS NI Cl. I Div.1&2, Groups A-D

Ordering information

Product page

www.endress.com/cpf81d

www.endress.com/cpf81

www.endress.com/cpf82d

www.endress.com/cpf82

Product Configurator

The navigation area is located on the right of the product page.

1. Under "Device support" click "Configure your selected product".
   ↳ The Configurator opens in a separate window.
2. Select all the options to configure the device in line with your requirements.
   ↳ In this way, you receive a valid and complete order code for the device.
3. Export the order code as a PDF or Excel file. To do so, click the appropriate button at the top of the screen.

Scope of delivery

The scope of delivery includes:
- Sensor in the version ordered
- Technical Information

Accessories

The following are the most important accessories available at the time this documentation was issued. For accessories not listed here, please contact your service or sales office.

Assembly

Flexdip CYA112
- Immersion assembly for water and wastewater
- Modular assembly system for sensors in open basins, channels and tanks
- Product Configurator on the product page: www.endress.com/cya112

Technical Information TI00432C

Measuring cables

CYK10 Memosens data cable
- For digital sensors with Memosens technology
- Product Configurator on the product page: www.endress.com/cyk10

Technical Information TI00118C

CPK9
- Terminated measuring cable for connecting analog sensors with TOP68 plug-in head
- Selection in accordance with product structure

For more information and to order, please contact your sales office.

Buffer

High-quality buffer solutions from Endress+Hauser - CPY20
The secondary buffer solutions have been referenced to primary reference material of the PTB (German Federal Physico-technical Institute) and to standard reference material of NIST (National Institute of Standards and Technology) according to DIN 19266 by a DKD (German Calibration Service) accredited laboratory.
Product Configurator on the product page: www.endress.com/cpy20

Technical buffer solutions for ORP electrodes
- +220 mV, pH 7, 100 ml; order no. CPY3-0
- +468 mV, pH 0.1, 100 ml; order no. CPY3-1

www.addresses.endress.com

Endress+Hauser

People for Process Automation

10.17 - E1-3 – ENDRESS & HAUSER MEMOSENS CABLE

BA00118C/07/A2/03.16
71331954

Operating Instructions
CYK10/11

Memosens-Datenkabel
Memosens data cables

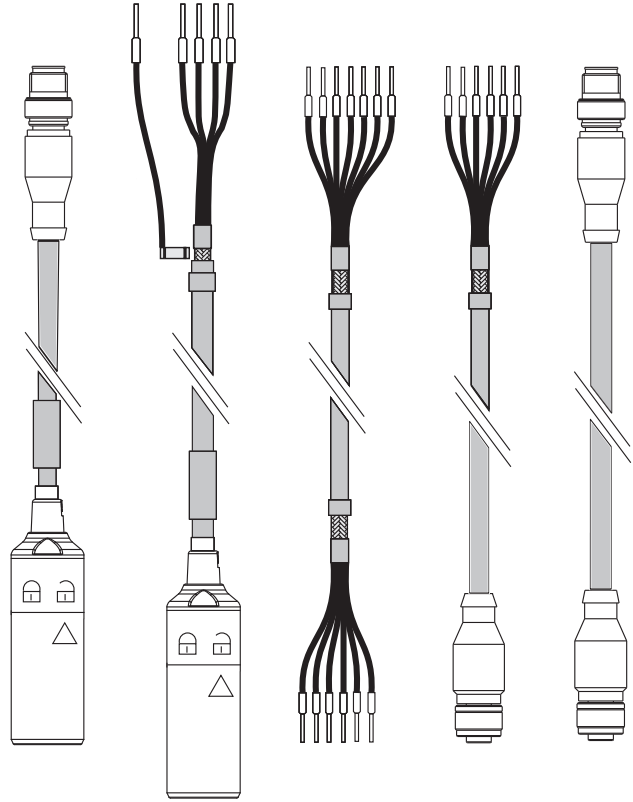

Endress+Hauser
People for Process Automation

EU-Konformitätserklärung
EU-Declaration of Conformity
Déclaration UE de Conformité

Endress+Hauser
People for Process Automation

CE

Company **Endress+Hauser Conducta GmbH+Co. KG**
Dieselstraße 24, 70839 Gerlingen, Germany
erklärt als Hersteller in alleiniger Verantwortung, dass das Produkt
declares as manufacturer under sole responsibility, that the product
déclare sous sa seule responsabilité en qualité de fabricant que le produit

Product
Memosens pH-Redox-Sensoren / pH/ORP sensors / capteurs pH/redox
CPSxxD-7***(*)G xx = 11, 12, 16, 41, 42, 71, 72, 76, 91, 96
CPS11D-8***G
CPS171D-BA7****
CPS4xxD-7**(*)G xx = 41, 71, 91

Sensor-Simulatoren / sensor simulators / simulateurs de capteurs
CYP01D-****G, CYP02D***G

Zusammen mit Messkabel / together with measuring cable / ensemble avec câble de mesure
CYK10-a**b a = G, E b = 1, 2
CYK20-BAab a = B1, B2 b = C1, C2

Regulations
den folgenden Europäischen Richtlinien entspricht:
conforms to following European Directives:
est conforme aux prescription des Directives Européennes suivantes :

EMC 2014/30/EU (L96/79)
ATEX 2014/34/EU (L96/309)

Standards
angewandte harmonisierte Normen oder normative Dokumente:
applied harmonized standards or normative documents:
normes harmonisées ou documents normatifs appliqués :

EN 61326-1	(2013)	EN 60079-0	(2012)	+A11:2013
EN 61326-2-3	(2013)	EN 60079-11	(2012)	
		EN 60079-26	(2007)	+ Corrigendum 1

Certification
EG-Baumusterprüfbescheinigung Nr. BVS 04 ATEX E 121 X
EC-Type Examination Certificate No.
Numéro de l'attestation d'examen CE de type

Ausgestellt von/issued by/délivré par DEKRA EXAM GmbH (0158)
Qualitätssicherung/Quality assurance/Système d'assurance qualité DEKRA EXAM GmbH (0158)

Gerlingen, 20.04.2016
Endress+Hauser Conducta GmbH+Co. KG

i. V. Jörg-Martin Müller
Technology

i. V. Sven-Matthias Scheibe
Technology Certifications and Approvals

EC_00356_01.16

CYK10/11

Memosens-Datenkabel
Memosens data cables

Betriebsanleitung 5

Operating Instructions 21

Inhaltsverzeichnis

1 Hinweise zum Dokument 6
1.1 Warnhinweise 6
1.2 Symbole 6

2 Grundlegende Sicherheitshinweise 7
2.1 Anforderungen an das Personal 7
2.2 Bestimmungsgemäße Verwendung 7
2.3 Arbeitssicherheit 7
2.4 Betriebssicherheit 7
2.5 Produktsicherheit 8

3 Warenannahme und Produktidentifizierung 10
3.1 Warenannahme 10
3.2 Produktidentifizierung 10

4 Anschlussschema (Ex-Bereich) 12

5 Montage 13
5.1 CYK11-Verbindungsdose an eine Wand montieren 13
5.2 CYK11-Verbindungsdose an ein Rohr montieren 14

6 Elektrischer Anschluss 14
6.1 CYK10 anschließen 15
6.2 CYK11 anschließen 15
6.3 CYK11-Verbindungsdose anschließen .. 18

7 Zubehör 20

1 Hinweise zum Dokument

1.1 Warnhinweise

Struktur des Hinweises	Bedeutung
⚠ GEFAHR **Ursache (/Folgen)** Ggf. Folgen der Missachtung ▶ Maßnahme zur Abwehr	Dieser Hinweis macht Sie auf eine gefährliche Situation aufmerksam. Wenn Sie die gefährliche Situation nicht vermeiden, **wird** dies zum Tod oder zu schweren Verletzungen führen.
⚠ WARNUNG **Ursache (/Folgen)** Ggf. Folgen der Missachtung ▶ Maßnahme zur Abwehr	Dieser Hinweis macht Sie auf eine gefährliche Situation aufmerksam. Wenn Sie die gefährliche Situation nicht vermeiden, **kann** dies zum Tod oder zu schweren Verletzungen führen.
⚠ VORSICHT **Ursache (/Folgen)** Ggf. Folgen der Missachtung ▶ Maßnahme zur Abwehr	Dieser Hinweis macht Sie auf eine gefährliche Situation aufmerksam. Wenn Sie die gefährliche Situation nicht vermeiden, kann dies zu mittelschweren oder leichten Verletzungen führen.
HINWEIS **Ursache/Situation** Ggf. Folgen der Missachtung ▶ Maßnahme/Hinweis	Dieser Hinweis macht Sie auf Situationen aufmerksam, die zu Sachschäden führen können.

1.2 Symbole

Symbol	Bedeutung
	Zusatzinformationen, Tipp
	erlaubt oder empfohlen
	verboten oder nicht empfohlen
	Verweis auf Dokumentation zum Gerät
	Verweis auf Seite
	Verweis auf Abbildung
	Ergebnis eines Handlungsschritts

2 Grundlegende Sicherheitshinweise

2.1 Anforderungen an das Personal

- Montage, Inbetriebnahme, Bedienung und Wartung der Messeinrichtung dürfen nur durch dafür ausgebildetes Fachpersonal erfolgen.
- Das Fachpersonal muss vom Anlagenbetreiber für die genannten Tätigkeiten autorisiert sein.
- Der elektrische Anschluss darf nur durch eine Elektrofachkraft erfolgen.
- Das Fachpersonal muss diese Betriebsanleitung gelesen und verstanden haben und die Anweisungen dieser Betriebsanleitung befolgen.
- Störungen an der Messstelle dürfen nur von autorisiertem und dafür ausgebildetem Personal behoben werden.

Reparaturen, die nicht in der mitgelieferten Betriebsanleitung beschrieben sind, dürfen nur direkt beim Hersteller oder durch die Serviceorganisation durchgeführt werden.

2.2 Bestimmungsgemäße Verwendung

Das Memosens-Datenkabel CYK10 wird zur Messung mit digitalen Sensoren mit Memosens-Technologie eingesetzt. Das Memosens-Verlängerungskabel CYK11 wird zum Anschluss von Festkabelsensoren mit Memosens-Protokoll und zur Anschlussverlängerung von CYK10-basierten Installationen verwendet.

Das Kabel CYK11 darf nicht zum Verlängern von CYK10-basierten Messstellen im explosionsgefährdeten Bereich verwendet werden. Für Messstellen im explosionsgefährdeten Bereich wird die Verwendung von durchgehenden, nicht verlängerten Memosens-Datenkabeln CYK10 empfohlen.

Eine andere als die beschriebene Verwendung stellt die Sicherheit von Personen und der gesamten Messeinrichtung in Frage und ist daher nicht zulässig.

Der Hersteller haftet nicht für Schäden, die aus unsachgemäßer oder nicht bestimmungsgemäßer Verwendung entstehen.

2.3 Arbeitssicherheit

Als Anwender sind Sie für die Einhaltung folgender Sicherheitsbestimmungen verantwortlich:
- Installationsvorschriften
- Lokale Normen und Vorschriften
- Vorschriften zum Explosionsschutz

2.4 Betriebssicherheit

1. Prüfen Sie vor der Inbetriebnahme der Gesamtmessstelle alle Anschlüsse auf ihre Richtigkeit. Stellen Sie sicher, dass elektrische Kabel und Schlauchverbindungen nicht beschädigt sind.
2. Nehmen Sie beschädigte Produkte nicht in Betrieb und schützen Sie diese vor versehentlicher Inbetriebnahme. Kennzeichnen Sie das beschädigte Produkt als defekt.

3. Können Störungen nicht behoben werden:
   Setzen Sie die Produkte außer Betrieb und schützen Sie diese vor versehentlicher Inbetriebnahme.

2.5 Produktsicherheit

2.5.1 Stand der Technik

Das Produkt ist nach dem Stand der Technik betriebssicher gebaut, geprüft und hat das Werk in sicherheitstechnisch einwandfreiem Zustand verlassen. Die einschlägigen Vorschriften und europäischen Normen sind berücksichtigt.

2.5.2 Elektrische Betriebsmittel in explosionsgefährdeten Bereichen

IECEx und ATEX
Das induktive Sensor-Kabel-Verbindungssystem Memosens, bestehend aus:
- IECEx-/ ATEX -zugelassenen Sensoren
- Messkabel CYK10-G**a, a = 1, 2
- Messkabel CYK10-I**a, a = 1, 2

ist zugelassen für Messanwendungen in explosiver Atmosphäre entsprechend
- IECEx Bauart-Zulassung BVS 11.0052 X
- EG Bauart-Zulassung BVS 04 ATEX E 121 X mit Ergänzungen

Das entsprechende IECEx-Zertifikat und die EG-Konformitätsbescheinigung für ATEX sind Bestandteil dieser Betriebsanleitung.

- Sensor und Kabel dürfen nicht unter elektrostatisch kritischen Prozessbedingungen betrieben werden. Unmittelbar auf das Verbindungssystem einwirkende starke Dampf- oder Staubströme müssen vermieden werden.
- Das Memosens-Messkabel CYK10 und dessen Steckkopf müssen vor elektrostatischen Ladungen geschützt werden, wenn sie durch die Ex-Zone 0 führen.
- Ex-Ausführungen von Memosens-Kabeln sind durch einen orange-roten Ring gekennzeichnet.
- Die maximal zulässige Kabellänge beträgt 100 m.
- Die Vorschriften für elektrische Installationen in explosionsgefährdeten Bereichen (EN/IEC 60079-14) müssen bei der Vewendungen von Geräten und Sensoren beachtet werden.

Beachten Sie die ex-relevanten Sicherheitshinweise des Messumformers und der Sensoren zur Verkabelung.

IECEx
Die zugelassenen digitalen Sensoren mit Memosens-Technologie dürfen mit den folgenden IECEx-zertifizierten Messkabeln
- CYK10
- oder einem baulich und in Gerätetechnik und Funktion identischem Memosens-Messkabel

nur an den IECEx-zugelassenen eigensicheren Sensor-Ausgangsstromkreis des Messumformers Liquiline M CM42 oder alternativ an einen IECEx-zertifizierten eigensicheren Memosens-Sensorausgang, der die folgenden Maximalwerte einhält, angeschlossen werden.

Insbesondere die effektive innere Induktivität und die Kapazität des zugelassenen, eigensicheren Sensorausgangs dürfen die unten stehenden Werte nicht überschreiten:

1. Entity Parameters [1]	2. Entity Parameters [1]
U_0 = 5,1 V	U_0 = 5,04 V
I_0 = 130 mA	I_0 = 80 mA
P_0 = 166 mW (Lineare Ausgabekennlinie)	P_0 = 112 mW (Trapezförmige Ausgabekennlinie)
C_i = 15 µF	C_i = 14,1 µF
L_i = 95 µH	L_i = 237,2 µH

1) Ex-relevante elektrische Anschlussparameter

ATEX

Die zugelassenen digitalen Sensoren mit Memosens-Technologie dürfen mit den folgenden Messkabeln

- CYK10
- oder einem baulich und in Gerätetechnik und Funktion identischem Memosens-Messkabel

nur an den ATEX-zugelassenen eigensicheren Sensor-Ausgangsstromkreis des Messumformers Mycom S CPM153-G... oder Liquiline M CM42 oder alternativ an einen ATEX-zertifizierten, eigensicheren Memosens-Sensorausgang, der die folgenden Maximalwerte einhält, angeschlossen werden. Insbesondere die effektive innere Induktivität und die Kapazität des zugelassenen, eigensicheren Sensorausgangs dürfen die unten stehenden Werte nicht überschreiten:

1. Entity Parameters [1]	2. Entity Parameters
U_0 = 5,1 V	U_0 = 5,04 V
I_0 = 130 mA	I_0 = 80 mA
P_0 = 166 mW (Lineare Ausgabekennlinie)	P_0 = 112 mW (Trapezförmige Ausgabekennlinie)
C_i = 15 µF	C_i = 14,1 µF
L_i = 95 µH	L_i = 237,2 µH

1) Ex-relevante elektrische Anschlussparameter

FM / CSA und Nepsi

Beachten Sie die entsprechende Bedienungsanleitung Ihres Messumformers.

3 Warenannahme und Produktidentifizierung

3.1 Warenannahme

1. Achten Sie auf unbeschädigte Verpackung.
   ↳ Teilen Sie Beschädigungen an der Verpackung Ihrem Lieferanten mit. Bewahren Sie die beschädigte Verpackung bis zur Klärung auf.
2. Achten Sie auf unbeschädigten Inhalt.
   ↳ Teilen Sie Beschädigungen am Lieferinhalt Ihrem Lieferanten mit. Bewahren Sie die beschädigte Ware bis zur Klärung auf.
3. Prüfen Sie die Lieferung auf Vollständigkeit.
   ↳ Vergleichen Sie mit Lieferpapieren und Ihrer Bestellung.
4. Für Lagerung und Transport: Verpacken Sie das Produkt stoßsicher und gegen Feuchtigkeit geschützt.
   ↳ Optimalen Schutz bietet die Originalverpackung. Die zulässigen Umgebungsbedingungen müssen eingehalten werden (s. Technische Daten).

Bei Rückfragen wenden Sie sich an Ihren Lieferanten oder an Ihre Vertriebszentrale.

3.2 Produktidentifizierung

3.2.1 Typenschild

Folgende Informationen zu Ihrem Gerät können Sie dem Typenschild entnehmen:
- Herstelleridentifikation
- Bestellcode
- Seriennummer
- Sicherheits- und Warnhinweise

▶ Vergleichen Sie die Angaben auf dem Typenschild mit Ihrer Bestellung.

3.2.2 Zertifikate und Zulassungen

Konformitätserklärung

Endress+Hauser sichert mit dieser Konformitätserklärung zu, dass das Produkt mit den Vorschriften der europäischen EMV-Richtlinie 2014/30/EU und der ATEX-Richtlinie 2014/34/EU übereinstimmt. Die Übereinstimmung wird durch die Einhaltung der in der Konformitätserklärung aufgeführten Normen nachgewiesen.

Zulassungen

IECEx
Ex ia IIC T3/T4/T6 Ga

ATEX
ATEX II 1G Ex ia IIC T3/T4/T6 Ga

FM / CSA
IS/NI CLI Div1&2 GP ABCD

NEPSI
II 1G Ex ia IIC T3/T4/T6 Ga

Temperaturklassen

Kabel		Umgebungstemperaturbereich T_a		
		T3	T4	T6
CYK10-G**a, a = 1, 2 CYK10-I**a, a = 1, 2	Messkabel	-15 °C ... 135 °C (5 °F ... 275 °F)	-15 °C ... 120 °C (5 °F ... 248 °F)	-15 °C ... 70 °C (5 °C ... 158 °F)

Bei Einhaltung der angegebenen Umgebungstemperaturen treten am Kabel keine für die jeweilige Temperaturklasse unzulässigen Temperaturen auf.

3.2.3 Lieferumfang

Memosens-Kabel
- 1 Memosens-Kabel in bestellter Ausführung
- 1 Betriebsanleitung BA00118C/07/A2

CYK11-Verbindungsdose
- Verbindungsdose komplett, 6-fache Anschlussklemme, Kabelverschraubung und/oder M12-Buchse
- Befestigungsplatte
- Schlauchschelle 40 ... 60 mm

4 Anschlussschema (Ex-Bereich)

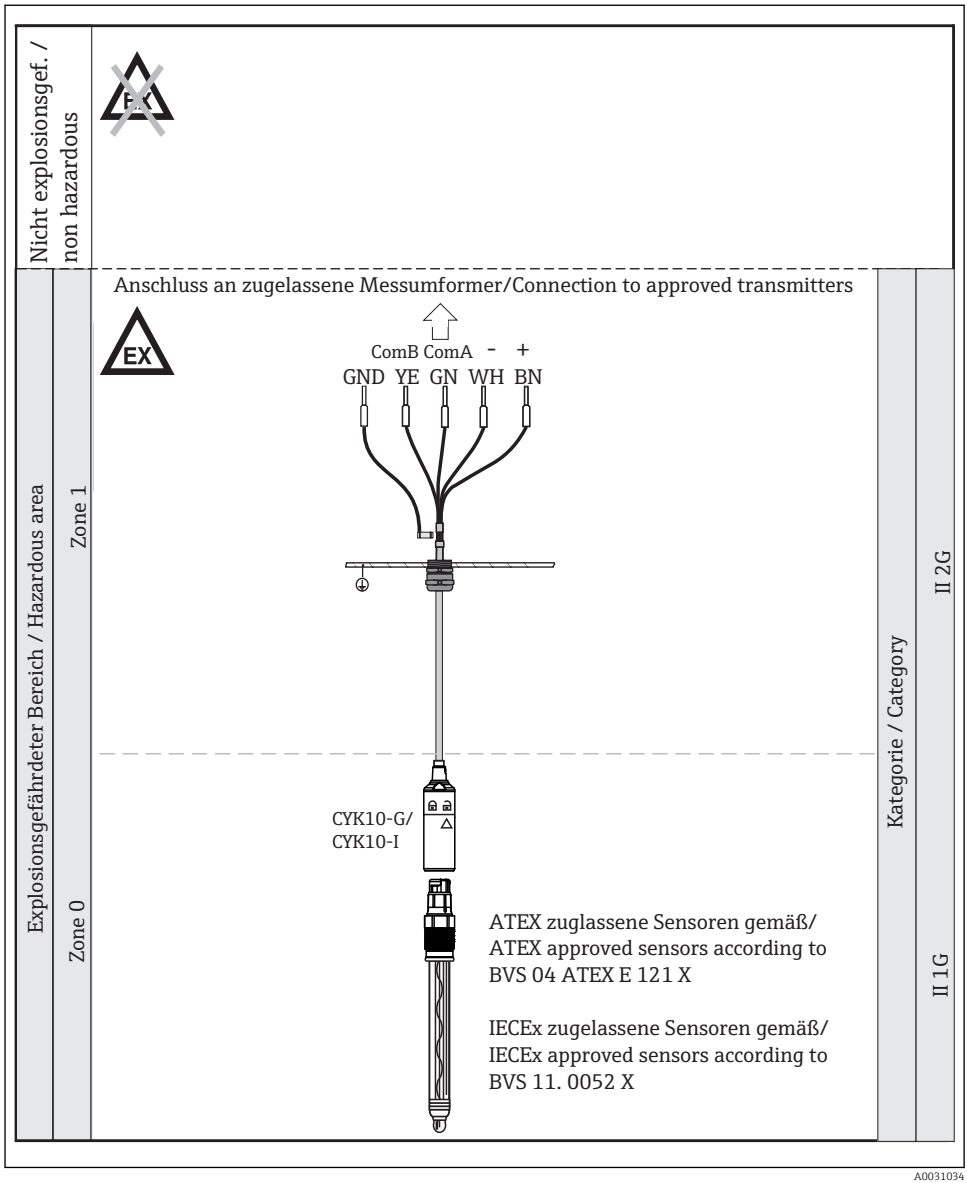

1 Anschluss im explosionsgefährdeten Bereich

5 Montage

5.1 CYK11-Verbindungsdose an eine Wand montieren

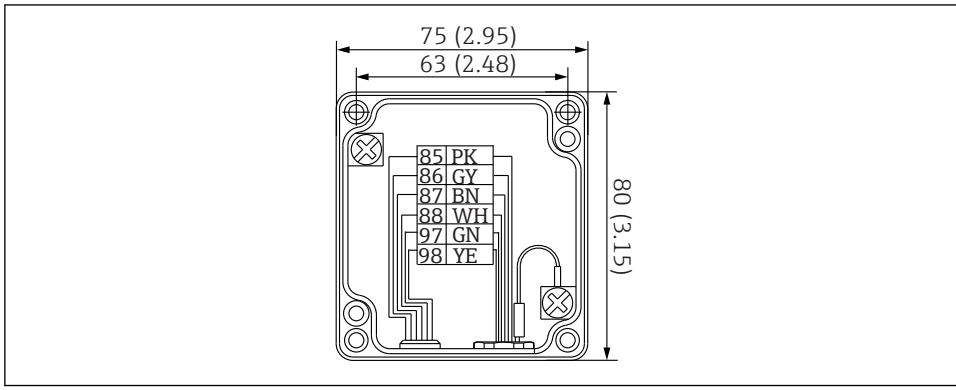

2 *Verbindungsdose, Abmessungen in mm (inch)*

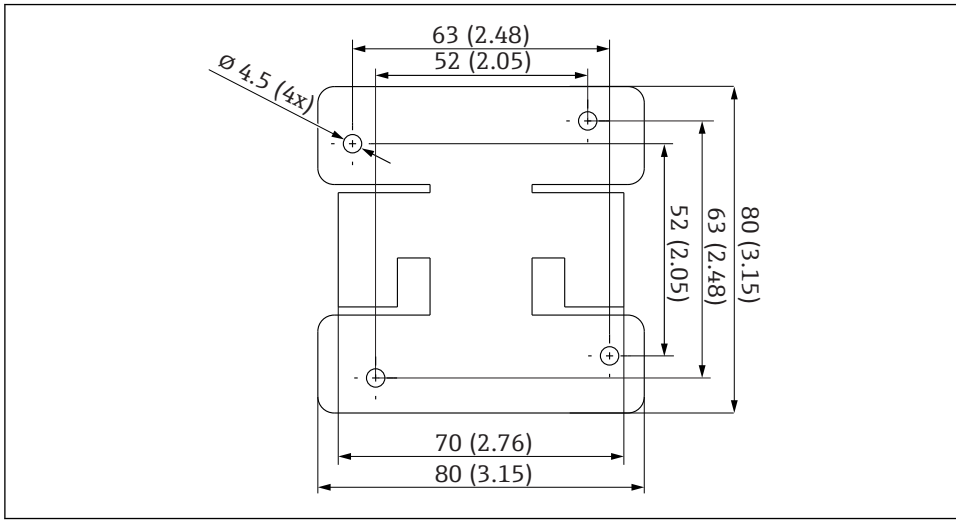

3 *Befestigungsplatte, Abmessungen in mm (inch)*

Montieren Sie die Verbindungsdose immer so, dass die Kabelzuführung von unten erfolgt.

Die Montage erfolgt bei abgenommenem Frontdeckel.

Schrauben Sie das Gehäuse der Verbindungsdose direkt an die Wand oder auf die Befestigungsplatte. Die Befestigungsplatte kann als Bohrschablone verwendet werden.

5.2 CYK11-Verbindungsdose an ein Rohr montieren

Montieren Sie die Verbindungsdose immer so, dass die Kabelzuführung von unten erfolgt.

1. Verschrauben Sie das Gehäuse mit der Befestigungsplatte. Damit ist eine Befestigung an waagrechten oder senkrechten Rohren möglich.
2. Biegen Sie die Laschen an der Befestigungsplatte auf den ungefähren Durchmesser des Halterohres. Befestigen Sie die Schlauchschelle am Rohr und klemmen Sie die Laschen unter die Schelle.

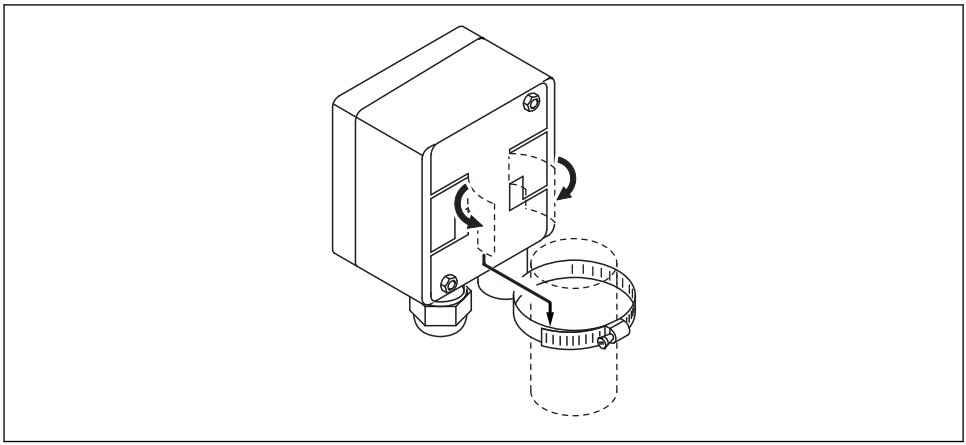

A0031081

4 *Rohrmontage mit Befestigungsplatte*

6 Elektrischer Anschluss

WARNUNG

Gerät unter Spannung

Unsachgemäßer Anschluss kann zu Verletzungen oder Tod führen

- Der elektrische Anschluss darf nur von einer Elektrofachkraft durchgeführt werden.
- Die Elektrofachkraft muss diese Betriebsanleitung gelesen und verstanden haben und muss die Anweisungen dieser Anleitung befolgen.
- Stellen Sie **vor Beginn** der Anschlussarbeiten sicher, dass an keinem Kabel Spannung anliegt.

6.1 CYK10 anschließen

6.1.1 CYK10 mit Aderendhülsen

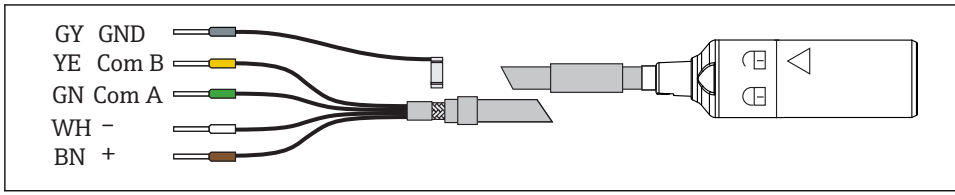

5 Elektrischer Anschluss, Aderendhülsen

Statt über GY kann auch über die Kabelschellen im Transmitter geerdet werden.

6.1.2 CYK10 mit M12-Stecker

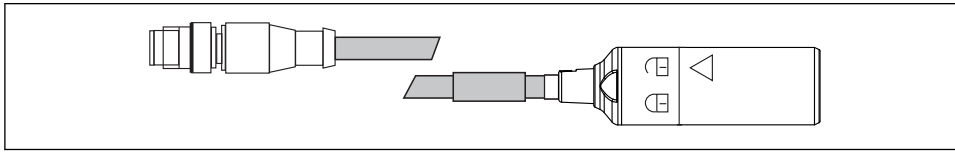

6 Elektrischer Anschluss, M12-Stecker

6.2 CYK11 anschließen

6.2.1 CYK11 mit Aderendhülsen

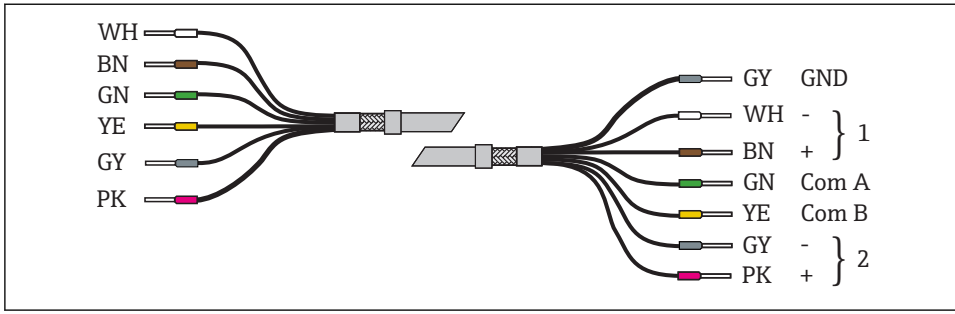

7 Elektrischer Anschluss, Aderendhülsen

1 Memosens-Sensor
2 Festkabel-Sensor

6.2.2 CYK11 und Festkabelsensor

Die Kabelfarben entsprechen denen der Sensoren, sodass ein direktes Durchverkabeln möglich ist.

Einige Festkabelsensoren arbeiten mit der Memosens-Betriebsspannung und werden wie ein Memosens-Sensor angeschlossen (z.B. CLS50D). Überprüfen Sie vor der Inbetriebnahme mit welcher Spannungsversorgung Ihr Sensor arbeitet und schließen Sie den Sensor dementsprechend an.

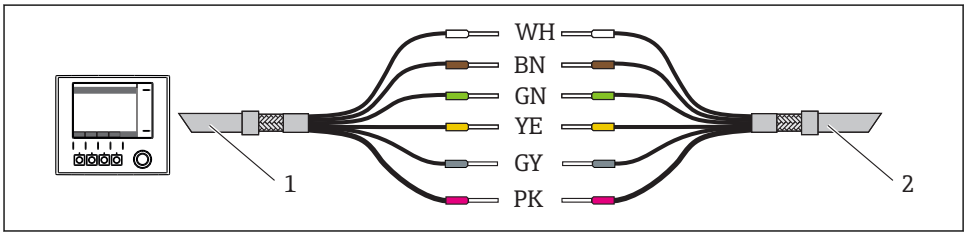

8 Elektrischer Anschluss, CYK11 und Festkabelsensor

1 CYK11
2 Festkabelsensor

6.2.3 CYK11 als Verlängerung für CYK10

Hier werden die Adern "GY" und "PK" nicht benötigt. Führen Sie diese auf potentialgetrennte Klemmen.

Nicht offen in der Kabeldose belassen!

Die Schirme beider Kabel müssen verbunden werden. Bei der Verbindungsdose Kabel-Kabel erfolgt dies automatisch über die Schirm-Kontaktierung in den Kabelverschraubungen.

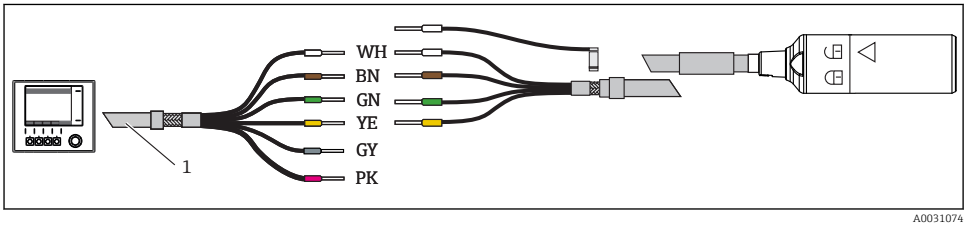

9 Elektrischer Anschluss, CYK11 als Verlängerung für CYK10

1 CYK11

6.2.4 CYK11 mit Aderendhülse und M12-Buchse

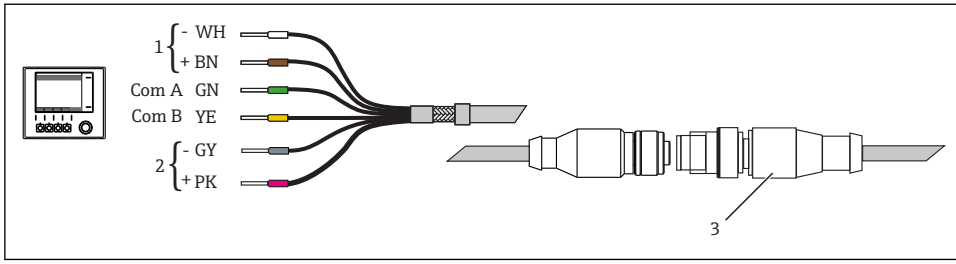

10 *Elektrischer Anschluss, CYK11 mit Aderendhülse und M12-Buchse*

1 *Memosens-Sensor*
2 *Festkabel-Sensor*
3 *Memosens-Sensor über CYK10 mit M12-Stecker / Festkabelsensor*

6.2.5 CYK11 mit M12-Stecker und M12-Buchse

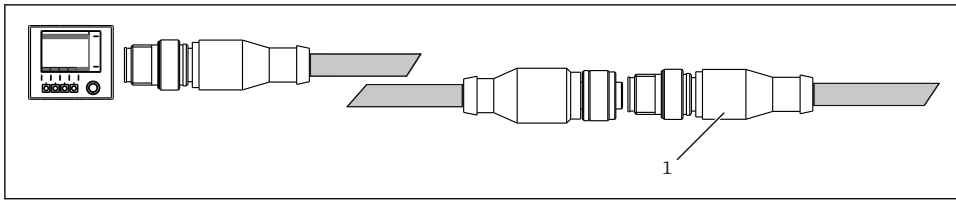

11 *Elektrischer Anschluss, CYK11 mit M12-Stecker und M12-Buchse*

1 *Festkabelsensor / Memosens-Sensor über CYK10 mit M12*

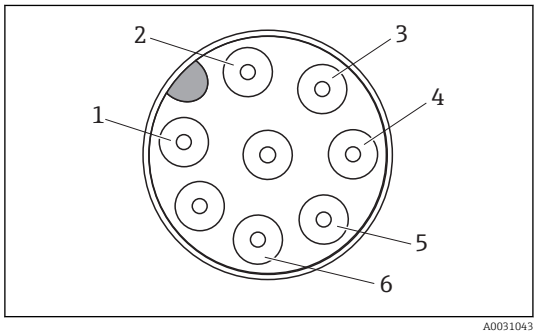

1 $V_{Festkabelsensor}$ *(+24 V) (PK)*
2 $GND_{Festkabelsensor}$ *(GY)*
3 $V_{Memosens\text{-}Sensor}$ *(BN)*
4 $GND_{Memosens\text{-}Sensor}$ *(WH)*
5 *RS 485 A (GN)*
6 *RS 485 B (YE)*

12 *Belegung M12-Stecker*

6.3 CYK11-Verbindungsdose anschließen

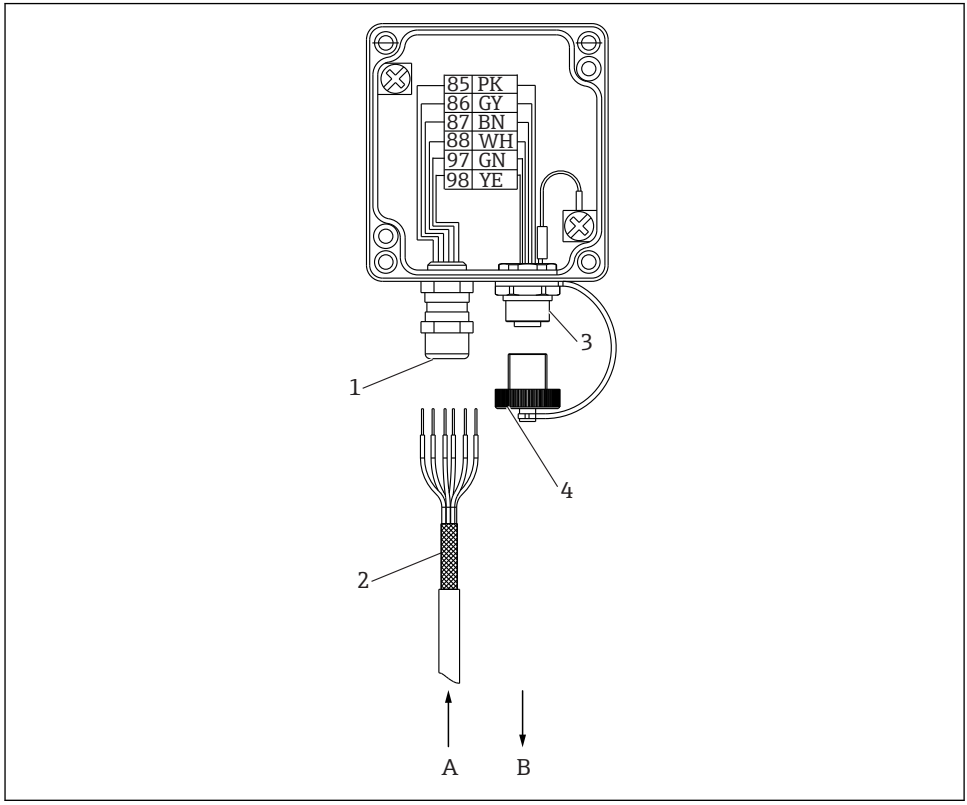

13 Elektrischer Anschluss CYK11-Verbindungsdose M12-Buchse/Kabel

1 Kabelverschraubung - Schirm in Verschraubung geklemmt
2 Schirm
3 M12-Einbaubuchse
4 Abdeckung für M12-Einbaubuchse
A Messumformer
B Sensor

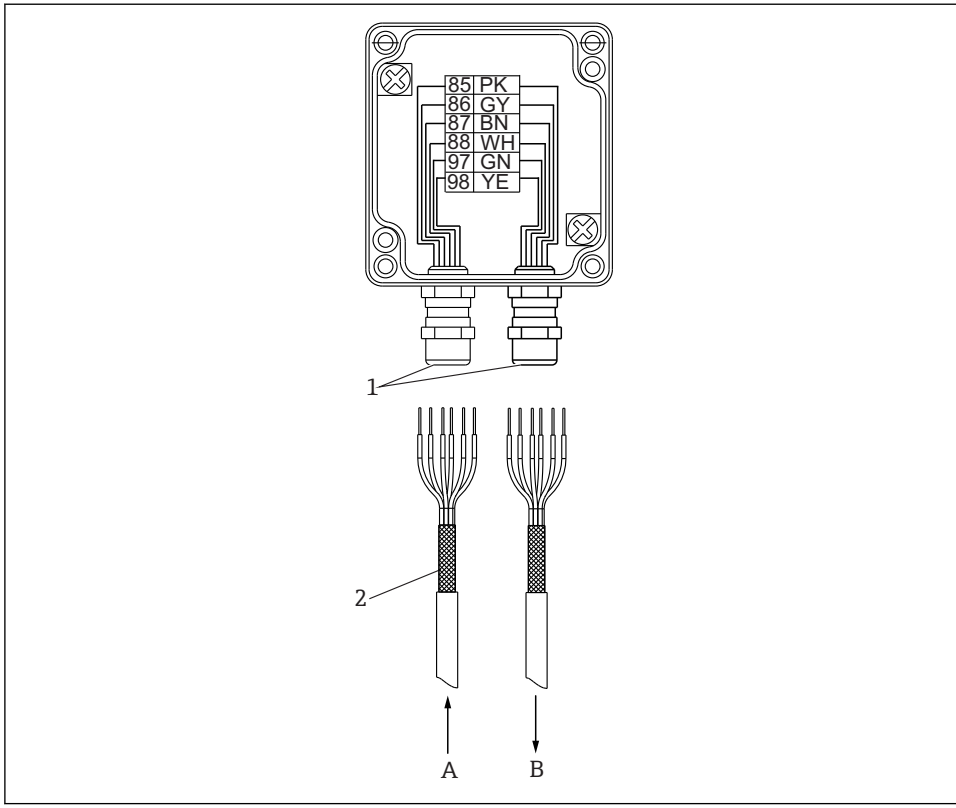

14 *Elektrischer Anschluss CYK11-Verbindungsdose Kabel/Kabel*

1 Kabelverschraubung - Schirm in Verschraubung geklemmt
2 Schirm
A Messumformer
B Sensor

Kabelverschraubungen montieren

1. Schieben Sie das Anschlusskabel in die Kabelverschraubung, bis der Mantel an der inneren Kontaktfeder anliegt.
2. Ziehen Sie die Kabelverschraubung zu (max. 3 Nm).
3. Verbinden Sie die Kabeladern.

7 Zubehör

Nachfolgend finden Sie das wichtigste Zubehör zum Ausgabezeitpunkt dieser Dokumentation. Für Zubehör, das nicht hier aufgeführt ist, wenden Sie sich an Ihren Service oder Ihre Vertriebszentrale.

Verbindungsdose M12-Buchse/Kabel
- Material: Aluminium, lackiert
- Kabelverlängerung: Memosens-Sensoren, Liquiline
- Best.-Nr.: 71145498

Verbindungsdose Kabel/Kabel
- Material: Aluminium, lackiert
- Kabelverlängerung: Memosens-Sensoren, Liquiline
- Best.-Nr.: 71145499

Table of contents

1 Document information 22
1.1 Warnings 22
1.2 Symbols 22

2 Basic safety instructions 23
2.1 Requirements for personnel 23
2.2 Designated use 23
2.3 Occupational safety 23
2.4 Operational safety 23
2.5 Product safety 24

3 Incoming acceptance and product identification 25
3.1 Incoming acceptance 25
3.2 Product identification 26

4 Connection diagram (hazardous area) 28

5 Installation 29
5.1 Mounting the CYK11 junction box on a wall 29
5.2 Mounting the CYK11 junction box on a pipe 30

6 Electrical connection 30
6.1 Connecting CYK10 31
6.2 Connecting CYK11 31
6.3 Connecting the CYK11 junction box 34

7 Accessories 36

1 Document information

1.1 Warnings

Structure of information	Meaning
DANGER **Causes (/consequences)** Consequences of non-compliance (if applicable) ▶ Corrective action	This symbol alerts you to a dangerous situation. Failure to avoid the dangerous situation **will** result in a fatal or serious injury.
WARNING **Causes (/consequences)** Consequences of non-compliance (if applicable) ▶ Corrective action	This symbol alerts you to a dangerous situation. Failure to avoid the dangerous situation **can** result in a fatal or serious injury.
CAUTION **Causes (/consequences)** Consequences of non-compliance (if applicable) ▶ Corrective action	This symbol alerts you to a dangerous situation. Failure to avoid this situation can result in minor or more serious injuries.
NOTICE **Cause/situation** Consequences of non-compliance (if applicable) ▶ Action/note	This symbol alerts you to situations which may result in damage to property.

1.2 Symbols

Symbol	Meaning
	Additional information, tips
	Permitted or recommended
	Not permitted or not recommended
	Reference to device documentation
	Reference to page
	Reference to graphic
	Result of a step

2 Basic safety instructions

2.1 Requirements for personnel

- Installation, commissioning, operation and maintenance of the measuring system may be carried out only by specially trained technical personnel.
- The technical personnel must be authorized by the plant operator to carry out the specified activities.
- The electrical connection may be performed only by an electrical technician.
- The technical personnel must have read and understood these Operating Instructions and must follow the instructions contained therein.
- Measuring point faults may be repaired only by authorized and specially trained personnel.

Repairs not described in the Operating Instructions provided may only be carried out directly by the manufacturer or by the service organization.

2.2 Designated use

The Memosens data cable CYK10 is used for measuring with digital sensors with Memosens technology. The Memosens extension cable CYK11 is used to connect fixed cable sensors with the Memosens protocol and to extend CYK10-based installations.

The CYK11 cable may not be used to extend CYK10-based measuring points in the hazardous area. The use of continuous, non-extended CYK10 Memosens data cables is recommended for measuring points in the hazardous area.

Use of the device for any purpose other than that described, poses a threat to the safety of people and of the entire measuring system and is therefore not permitted.

The manufacturer is not liable for damage caused by improper or non-designated use.

2.3 Occupational safety

As the user, you are responsible for complying with the following safety conditions:
- Installation guidelines
- Local standards and regulations
- Regulations for explosion protection

2.4 Operational safety

1. Before commissioning the entire measuring point, verify that all connections are correct. Ensure that electrical cables and hose connections are undamaged.
2. Do not operate damaged products, and safeguard them to ensure that they are not operated inadvertently. Label the damaged product as defective.
3. If faults cannot be rectified:
   Take the products out of operation and safeguard them to ensure that they are not operated inadvertently.

2.5 Product safety

2.5.1 State of the art

The product is designed to meet state-of-the-art safety requirements, has been tested, and left the factory in a condition in which it is safe to operate. The relevant regulations and European standards have been observed.

2.5.2 Electrical equipment in hazardous areas

IECEx and ATEX

The Memosens inductive sensor cable connection system, consisting of:
- IECEx-/ ATEX-approved sensors
- Measuring cable CYK10-G**a, a = 1, 2
- Measuring cable CYK10-I**a, a = 1, 2

is approved for measuring applications in explosive atmospheres in accordance with
- IECEx design approval BVS 11.0052 X
- EC design approval BVS 04 ATEX E 121 X with amendments

The corresponding IECEx certificate and the EC Certificate of Conformity for ATEX are an integral part of these Operating Instructions.

- The sensors and cables must not be operated under electrostatically critical process conditions. Avoid strong steam or dust currents that act directly on the connection system.
- The Memosens measuring cable CYK10 and its plug-in head must be protected against electrostatic charge if they pass through Ex zone 0.
- Hazardous area versions of Memosens cables have an orange/red ring.
- The maximum permitted cable length is 100 m.
- Compliance with the regulations for electrical installations in hazardous areas (EN/IEC 60079-14) is mandatory when using devices and sensors.

Pay attention to the ex-related safety instructions of the transmitter and sensors when cabling.

IECEx

The approved digital sensors with Memosens technology may be connected with the following IECEx-certified measuring cables
- CYK10
- or a Memosens measuring cable that is identical both in terms of design, device technology and function

only to an IECEx-approved intrinsically safe sensor output circuit of the Liquiline M CM42 transmitter or alternatively to an IECEx-certified intrinsically safe Memosens sensor output that complies with the following maximum values. In particular, the effective inner inductance and the capacitance of the approved, intrinsically safe sensor output may not exceed the values below:

1. Entity Parameters [1]	2. Entity Parameters [1]
U_0 = 5.1 V	U_0 = 5.04 V
I_0 = 130 mA	I_0 = 80 mA

1. Entity Parameters [1]	2. Entity Parameters [1]
P_0 = 166 mW (linear output curve)	P_0 = 112 mW (trapezoid output curve)
C_i = 15 µF	C_i = 14.1 µF
L_i = 95 µH	L_i = 237.2 µH

1) Ex-relevant electrical connection parameters

ATEX

The approved digital sensors with Memosens technology may be connected with the following measuring cables

- CYK10
- or a Memosens measuring cable that is identical both in terms of design, device technology and function

only to the ATEX-approved intrinsically safe sensor output circuit of the Mycom S CPM153-G... or Liquiline M CM42 transmitter or alternatively to an ATEX-certified, intrinsically safe Memosens sensor output that complies with the following maximum values. In particular, the effective inner inductance and the capacitance of the approved, intrinsically safe sensor output may not exceed the values below:

1. Entity Parameters [1]	2. Entity Parameters
U_0 = 5.1 V	U_0 = 5.04 V
I_0 = 130 mA	I_0 = 80 mA
P_0 = 166 mW (linear output curve)	P_0 = 112 mW (trapezoid output curve)
C_i = 15 µF	C_i = 14.1 µF
L_i = 95 µH	L_i = 237.2 µH

1) Ex-relevant electrical connection parameters

FM / CSA and Nepsi

Pay attention to the associated Operating Instructions of your transmitter.

3 Incoming acceptance and product identification

3.1 Incoming acceptance

1. Verify that the packaging is undamaged.
   ↳ Notify your supplier of any damage to the packaging.
   Keep the damaged packaging until the matter has been settled.

2. Verify that the contents are undamaged.
   ↳ Notify your supplier of any damage to the delivery contents.
   Keep the damaged products until the matter has been settled.
3. Check the delivery for completeness.
   ↳ Check it against the delivery papers and your order.
4. Pack the product for storage and transportation in such a way that it is protected against impact and moisture.
   ↳ The original packaging offers the best protection.
   The permitted ambient conditions must be observed (see "Technical data").

If you have any questions, please contact your supplier or your local sales center.

3.2 Product identification

3.2.1 Nameplate

The nameplate provides you with the following information on your device:
- Manufacturer identification
- Order code
- Serial number
- Safety information and warnings

▶ Compare the data on the nameplate with your order.

3.2.2 Certificates and approvals

Declaration of conformity

This Endress+Hauser Declaration of Conformity serves to guarantee that the product complies with the requirements of European Directive 2014/30/EU relating to electromagnetic compatibility and ATEX Directive 2014/34/EU. Compliance is verified by adherence to the standards listed in the Declaration of Conformity.

Approvals

IECEx
Ex ia IIC T3/T4/T6 Ga

ATEX
ATEX II 1G Ex ia IIC T3/T4/T6 Ga

FM/CSA
IS/NI CLI Div1&2 GP ABCD

NEPSI
II 1G Ex ia IIC T3/T4/T6 Ga

Temperature classes

Cable		Ambient temperature range T_a		
		T3	T4	T6
CYK10-G**a, a = 1, 2 CYK10-I**a, a = 1, 2	Measuring cable	-15 °C to 135 °C (5 °F to 275 °F)	-15 °C to 120 °C (5 °F to 248 °F)	-15 °C to 70 °C (5 °C to 158 °F)

If ambient temperatures do not fall outside the ambient temperatures shown above, no invalid temperatures for the particular temperature class will occur at the cable.

3.2.3 Scope of delivery

Memosens cable

- 1 Memosens cable, version as ordered
- 1 Operating Instructions BA00118C/07/A2

CYK11 junction box

- Complete junction box, 6-position terminal, cable gland and/or M12 socket
- Securing plate
- Hose clip 40 to 60 mm

4 Connection diagram (hazardous area)

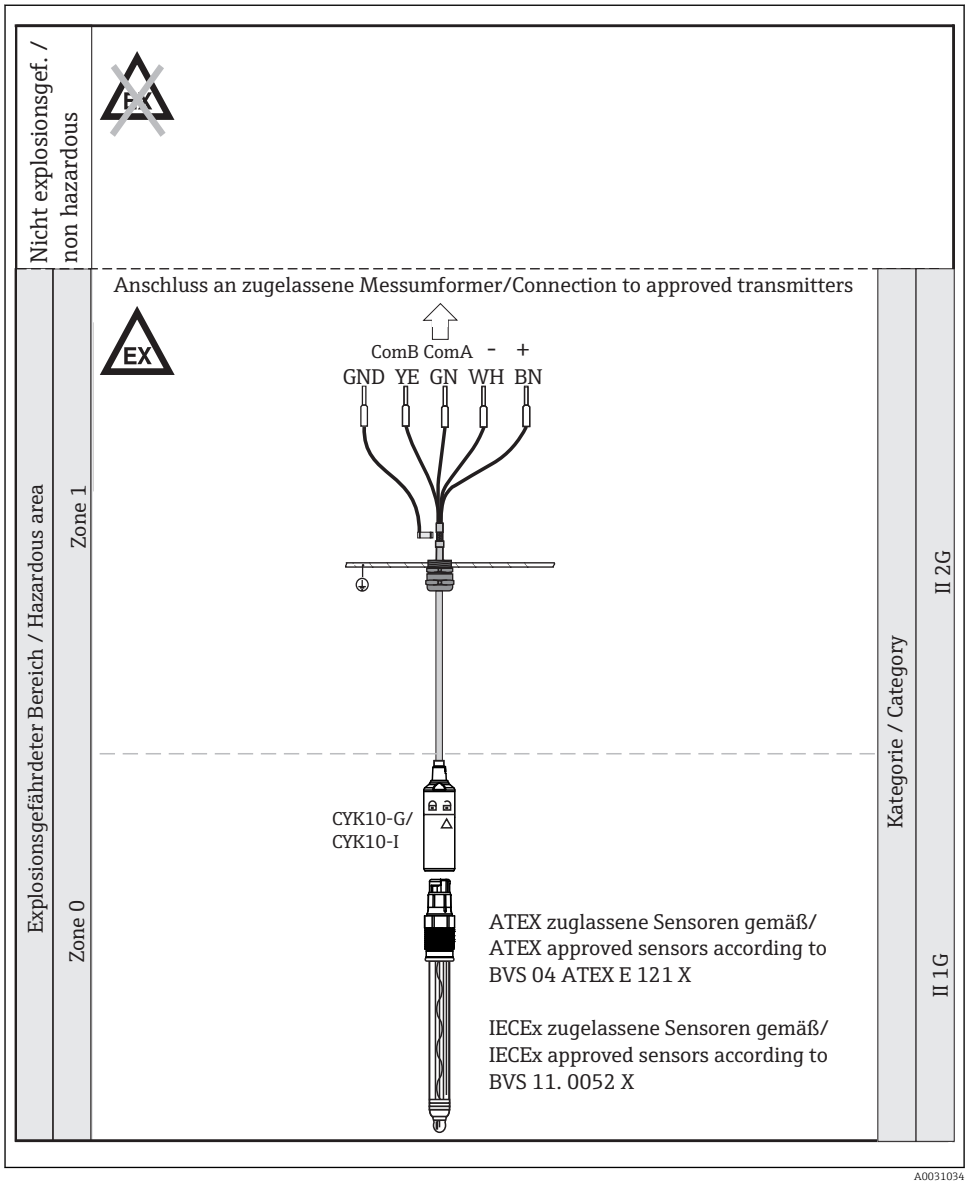

1 Connection in hazardous areas

5 Installation

5.1 Mounting the CYK11 junction box on a wall

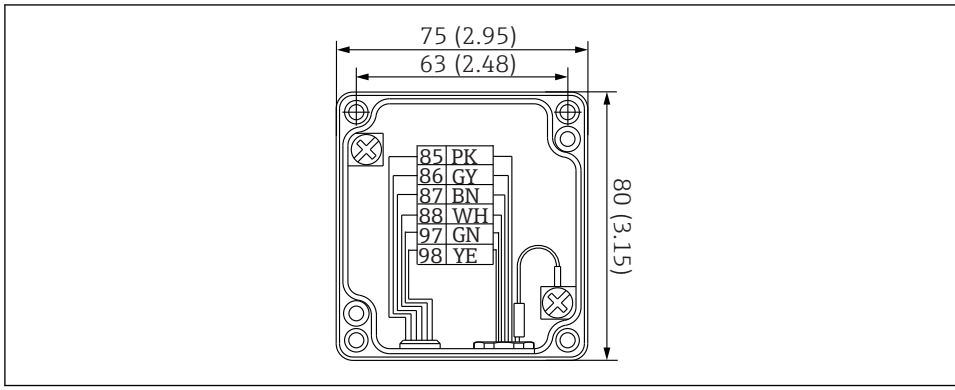

2 *Junction box, dimensions in mm (inch)*

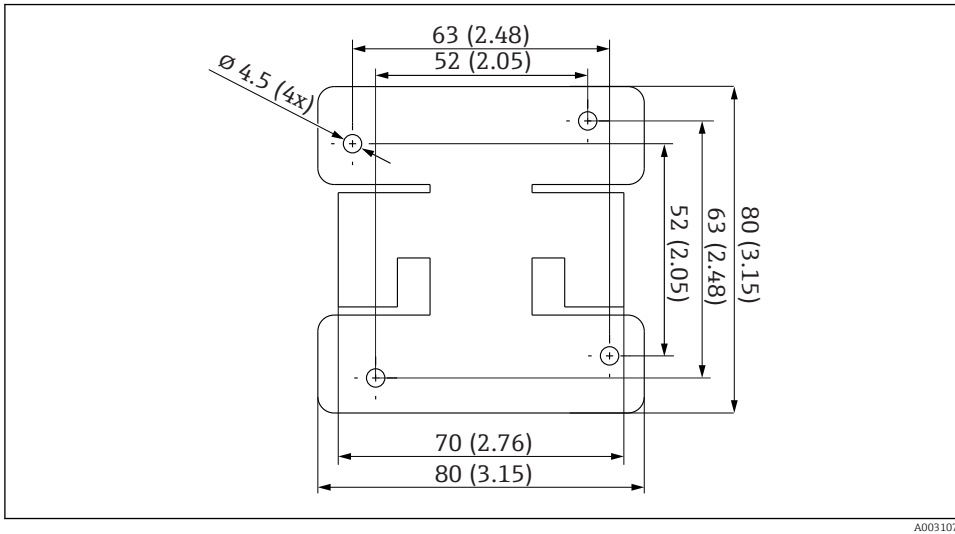

3 *Securing plate, dimensions in mm (inch)*

Always mount the junction box in such a way that the cable is fed in from below.

The box is mounted with the front cover removed.

Screw the housing of the junction box directly on the wall or on the securing plate. The securing plant can be used as a drilling template.

5.2 Mounting the CYK11 junction box on a pipe

Always mount the junction box in such a way that the cable is fed in from below.

1. Screw the housing to the securing plate. This makes it possible to secure the box to horizontal or vertical pipes.
2. Bend the loops on the securing plate to match the approximate diameter of the retaining pipe. Secure the hose clip on the pipe and fix the loops under the clip.

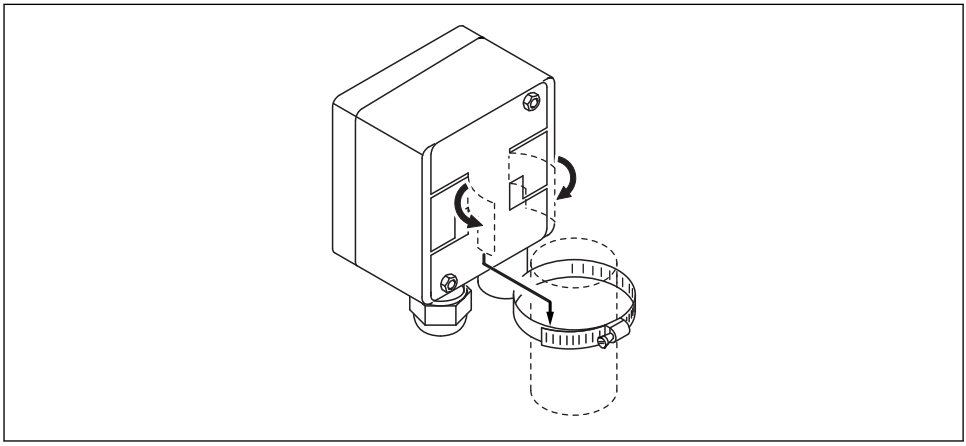

A0031081

4 *Pipe mounting with securing plate*

6 Electrical connection

WARNING

Device is live

Incorrect connection may result in injury or death

- The electrical connection may be performed only by an electrical technician.
- The electrical technician must have read and understood these Operating Instructions and must follow the instructions contained therein.
- **Prior** to commencing connection work, ensure that no voltage is present on any cable.

6.1 Connecting CYK10

6.1.1 CYK10 with ferrules

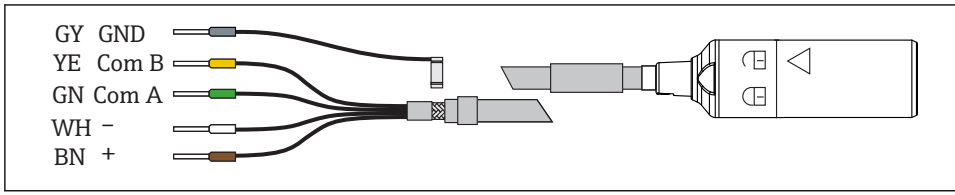

5 Electrical connection, ferrules

Instead of grounding via GY, it is also possible to ground the device via the cable clamps in the transmitter.

6.1.2 CYK10 with M12 plug

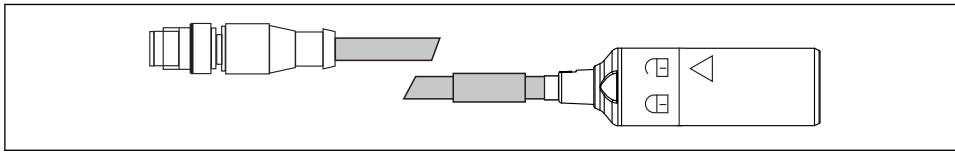

6 Electrical connection, M12 plug

6.2 Connecting CYK11

6.2.1 CYK11 with ferrules

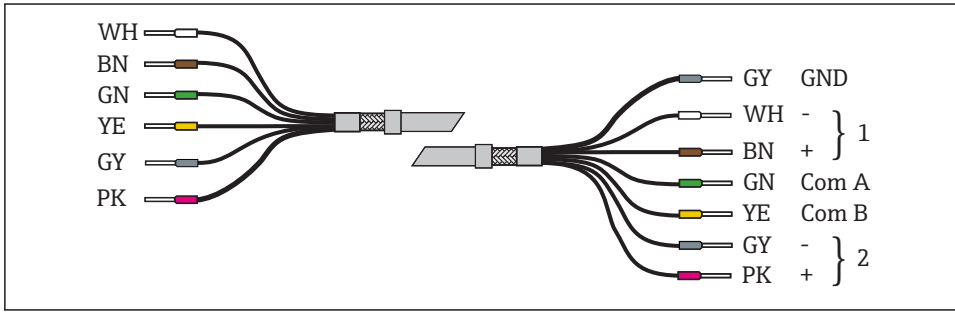

7 Electrical connection, ferrules

1 Memosens sensor
2 Fixed cable sensor

6.2.2 CYK11 and fixed cable sensor

The cable colors correspond to those of the sensors so direct through-cabling is possible.

Some fixed cable sensors work with the Memosens operating voltage and are connected like a Memosens sensor (e.g. CLS50D). Before commissioning, check which power supply your sensor works with and connect the sensor accordingly.

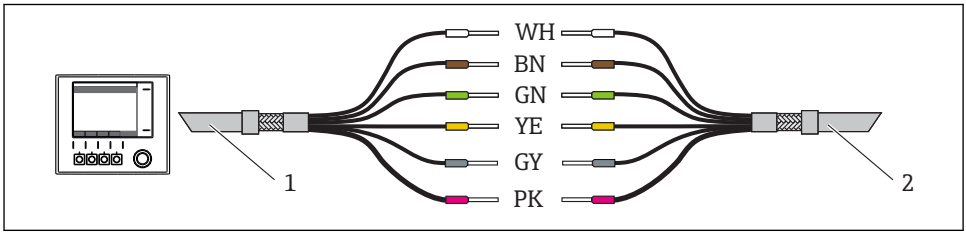

8 Electrical connection, CYK11 and fixed cable sensor

1 CYK11
2 Fixed cable sensor

6.2.3 CYK11 as extension for CYK10

The "GY" and "PK" wires are not required here. Route these to potentially isolated terminals.

Do not leave them exposed in the cable box!

The shields of both cables must be connected. In the case of the cable-cable junction box, this is performed automatically via the shield contact in the cable glands.

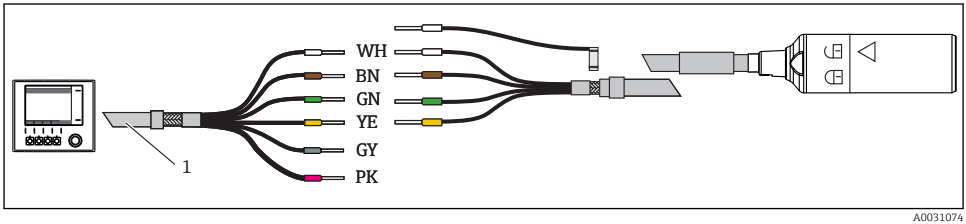

9 Electrical connection, CYK11 as extension for CYK10

1 CYK11

6.2.4 CYK11 with ferrule and M12 socket

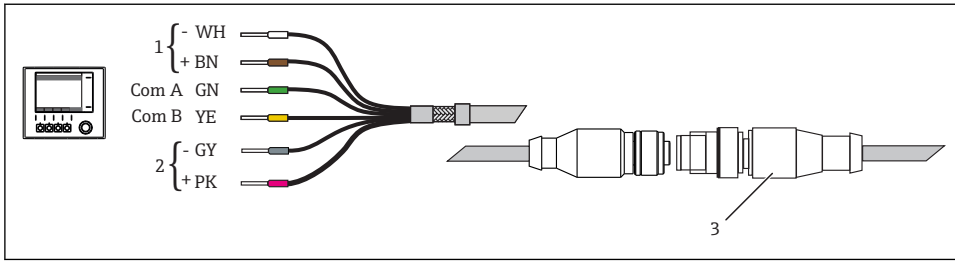

10 *Electrical connection, CYK11 with ferrule and M12 plug*

1 *Memosens sensor*
2 *Fixed cable sensor*
3 *Memosens sensor via CYK10 with M12 plug / fixed cable sensor*

6.2.5 CYK11 with M12 plug and M12 socket

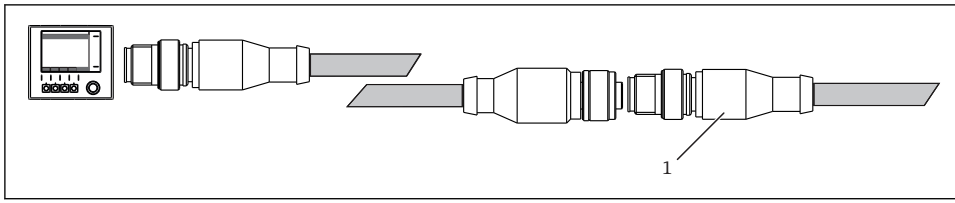

11 *Electrical connection, CYK11 with M12 plug and M12 socket*

1 *Fixed cable sensor / Memosens sensor via CYK10 with M12*

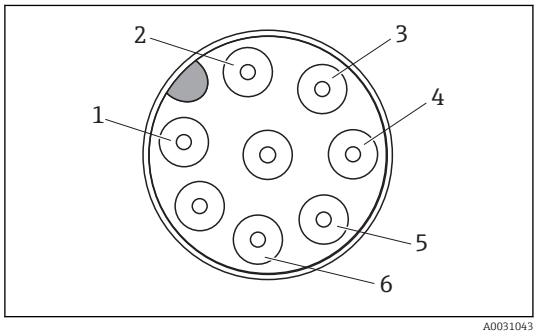

1 $V_{Fixed\ cable\ sensor}$ *(+24 V) (PK)*
2 $GND_{Fixed\ cable\ sensor}$ *(GY)*
3 $V_{Memosens\ sensor}$ *(BN)*
4 $GND_{Memosens\ sensor}$ *(WH)*
5 *RS 485 A (GN)*
6 *RS 485 B (YE)*

12 *M12 plug assignment*

6.3 Connecting the CYK11 junction box

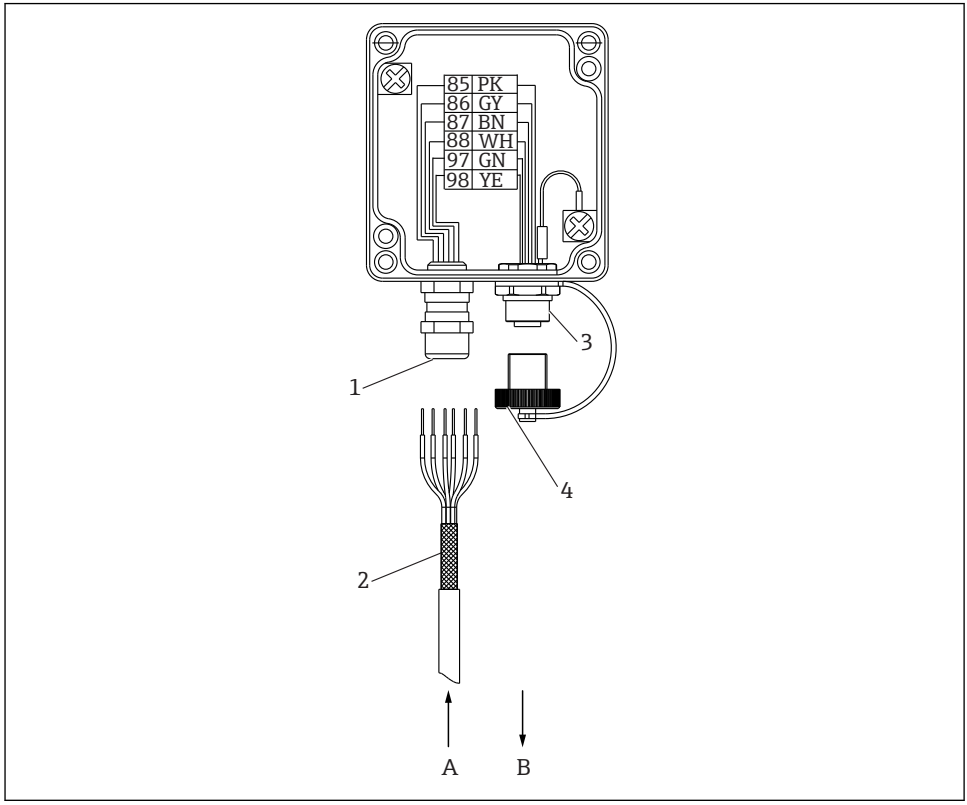

13 Electrical connection of CYK11 junction box, M12 socket/cable

1 Cable gland - shield fixed in gland
2 Shielding
3 M12 built-in socket
4 Cover for M12 installation socket
A Transmitter
B Sensor

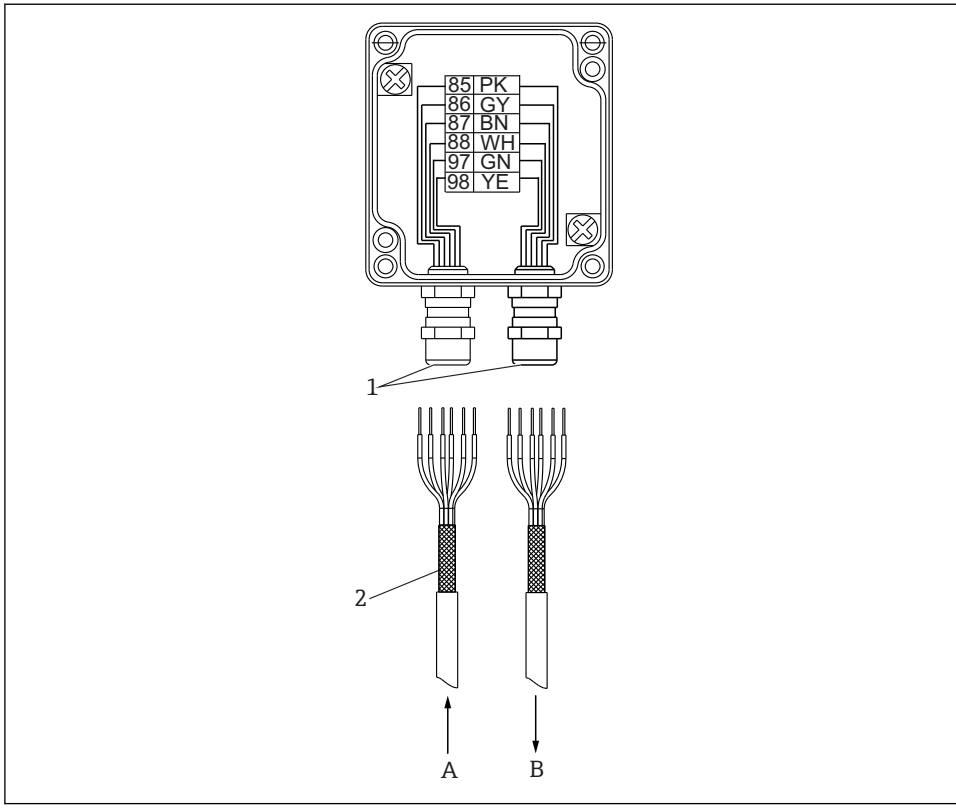

14 *Electrical connection of CYK11 junction box, cable/cable*

1 Cable gland - shield fixed in gland
2 Shielding
A Transmitter
B Sensor

Mounting the cable glands

1. Guide the connecting cable into the cable gland until the sheath is in contact with the inner contacting spring.
2. Tighten the cable gland (max. 3 Nm).
3. Connect the cable cores.

7 Accessories

The following are the most important accessories available at the time this documentation was issued. For accessories not listed here, please contact your service or sales office.

Junction box, M12 socket/cable
- Material: aluminum, painted
- Cable extension: Memosens sensors, Liquiline
- Order No.: 71145498

Junction box, cable/cable
- Material: aluminum, painted
- Cable extension: Memosens sensors, Liquiline
- Order No.: 71145499

www.addresses.endress.com

Endress+Hauser

People for Process Automation

10.18 - E1-4 – ENDRESS & HAUSER LEVEL TRANSMITTER

BA00380P/00/EN/15.15
71293257

Valid as of version
01.00.zz

Operating Instructions
Waterpilot FMX21

Hydrostatic level measurement
HART

HART COMMUNICATION PROTOCOL

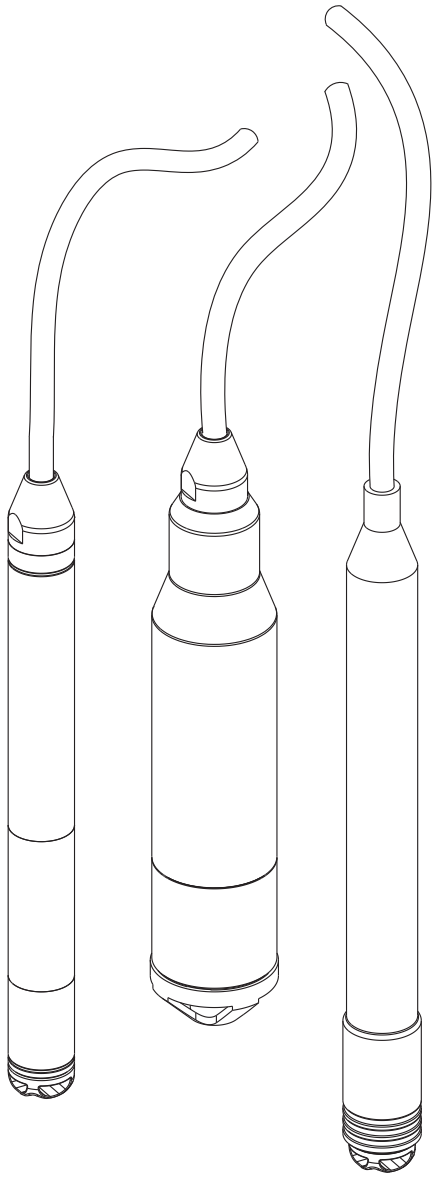

Endress+Hauser
People for Process Automation

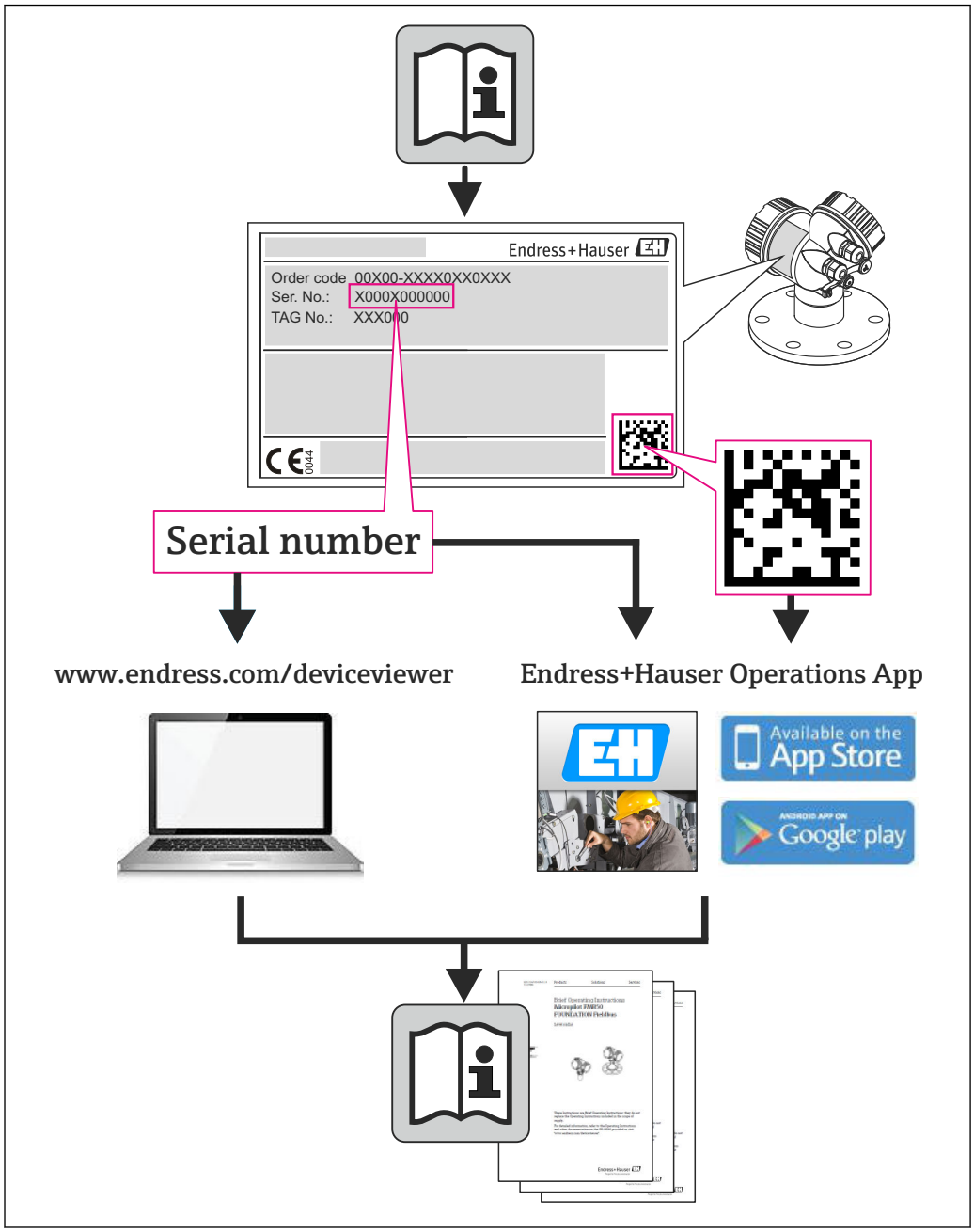

- Make sure the document is stored in a safe place such that it is always available when working on or with the device.
- To avoid danger to individuals or the facility, read the "Basic safety instructions" section carefully, as well as all other safety instructions in the document that are specific to working procedures.
- The manufacturer reserves the right to modify technical data without prior notice. Your Endress+Hauser distributor will supply you with current information and updates to these Instructions.

Table of contents

1 Document information 5
1.1 Document function 5
1.2 Symbols used 5
1.3 Documentation 6
1.4 Terms and abbreviations 7

2 Basic safety instructions 8
2.1 Requirements concerning the staff 8
2.2 Designated use 8
2.3 Workplace safety 8
2.4 Operational safety 8
2.5 Product safety 9

3 Product description 10
3.1 Function 10

4 Incoming acceptance and product identification 11
4.1 Incoming acceptance 11
4.2 Product identification 12
4.3 Nameplates 13
4.4 Identification of sensor type 14
4.5 Storage and transport 14
4.6 Scope of delivery 14

5 Installation 16
5.1 Installation conditions 16
5.2 Additional mounting instructions 17
5.3 Dimensions 17
5.4 Mounting the Waterpilot with a mounting clamp 18
5.5 Mounting the Waterpilot with a cable mounting screw 19
5.6 Mounting the terminal box 20
5.7 Mounting the TMT182 temperature head transmitter with terminal box 20
5.8 Mounting the terminal strip for the Pt100 passive (without TMT182) 21
5.9 Post-installation check 21

6 Electrical connection 23
6.1 Connecting the device 23
6.2 Supply voltage 25
6.3 Cable specifications 25
6.4 Power consumption 25
6.5 Current consumption 26
6.6 Maximum load 26
6.7 Connecting the measuring unit 27
6.8 Post-connection check 31

7 Operation options 32
7.1 Overview of operating options 32
7.2 Operating concept 33
7.3 Structure of the operating menu 33
7.4 Locking/unlocking operation 34
7.5 Resetting to factory settings (reset) 35

8 Integrating device via HART® protocol 36
8.1 HART process variables and measured values 36
8.2 Device variables and measured values 37

9 Commissioning 38
9.1 Post-installation check and function check . . . 38
9.2 Unlocking/locking configuration 38
9.3 Commissioning 38
9.4 Selecting the language 39
9.5 Measuring mode selection 39
9.6 For selecting the pressure engineering unit . . . 40
9.7 Position adjustment 40
9.8 Configuring the damping 41
9.9 Configuring pressure measurement 41
9.10 Configuring level measurement 43
9.11 Automatic density compensation 56
9.12 Linearization 59
9.13 Manual entry of a linearization table via operating tool 62
9.14 Backing up or duplicating the device data 63

10 Diagnostics and troubleshooting . . . 64
10.1 Troubleshooting 64
10.2 Diagnostic events 64
10.3 Troubleshooting specific to Waterpilot FMX21 with optional Pt100 67
10.4 Troubleshooting specific to TMT182 temperature head transmitter 68
10.5 Response of output to errors 68
10.6 Firmware history 69

11 Maintenance 70
11.1 Exterior cleaning 70

12 Repairs 71
12.1 General notes 71
12.2 Spare parts 71
12.3 Return 71
12.4 Disposal 71

13 Overview of the operating menu 72

13.1 Overview of parameters in the "Expert" menu 75

14 Description of device parameters ... 80

14.1 Expert → System 80
14.2 Expert → System → Instrument info 81
14.3 Expert → System → Management 83
14.4 Expert → Measurement → Measuring mode .. 83
14.5 Expert → Measurement → Basic setup 84
14.6 Expert → Measurement → Pressure 86
14.7 Expert → Measurement → Level 88
14.8 Expert → Measurement → Linearization 93
14.9 Expert → Measurement → Sensor limits 96
14.10 Expert → Measurement → Sensor trim 97
14.11 Expert → Output → Current output 98
14.12 Expert→ Communication → HART config. 102
14.13 Expert→ Communication → HART info 104
14.14 Expert→ Communication → HART output ... 106
14.15 Expert→ Communication → HART input 109
14.16 Expert → Application 111
14.17 Expert → Diagnosis 112
14.18 Expert → Diagnosis → Diagnostic list 114
14.19 Expert → Diagnosis→ Event logbook 115
14.20 Expert → Diagnosis → Simulation 116

15 Accessories 118

15.1 Suspension clamp 118
15.2 Terminal box 118
15.3 Additional weight 118
15.4 Temperature head transmitter TMT182 (4 to 20 mA HART) 119
15.5 Pt-100 resistance thermometer 119
15.6 Cable mounting screws 119
15.7 Terminals 119
15.8 Cable shortening kit 119
15.9 Cable marking 119
15.10 Testing adapter 120

16 Technical data 122

16.1 Input 122
16.2 Output 124
16.3 Performance characteristics 127
16.4 Environment 129
16.5 Process 131
16.6 Additional technical data 131

Index 132

1 Document information

1.1 Document function

These Operating Instructions contain all the information that is required in various phases of the life cycle of the device: from product identification, incoming acceptance and storage, to mounting, connection, operation and commissioning through to troubleshooting, maintenance and disposal.

1.2 Symbols used

1.2.1 Safety symbols

Symbol	Meaning
DANGER	**DANGER!** This symbol alerts you to a dangerous situation. Failure to avoid this situation will result in serious or fatal injury.
WARNING	**WARNING!** This symbol alerts you to a dangerous situation. Failure to avoid this situation can result in serious or fatal injury.
CAUTION	**CAUTION!** This symbol alerts you to a dangerous situation. Failure to avoid this situation can result in minor or medium injury.
NOTICE	**NOTE!** This symbol contains information on procedures and other facts which do not result in personal injury.

1.2.2 Electrical symbols

Symbol	Meaning	Symbol	Meaning
⎓	Direct current	~	Alternating current
⎓ ~	Direct current and alternating current	⏚	**Ground connection** A grounded terminal which, as far as the operator is concerned, is grounded via a grounding system.
⏚	**Protective ground connection** A terminal which must be connected to ground prior to establishing any other connections.	⏚	**Equipotential connection** A connection that has to be connected to the plant grounding system: This may be a potential equalization line or a star grounding system depending on national or company codes of practice.

1.2.3 Tool symbols

Symbol	Meaning
 A0011220	Flat blade screwdriver
 A0011219	Philips screwdriver

Symbol	Meaning
A0011221	Allen key
A0011222	Open-ended wrench

1.2.4 Symbols for certain types of information

Symbol	Meaning
	Permitted Procedures, processes or actions that are permitted.
	Preferred Procedures, processes or actions that are preferred.
	Forbidden Procedures, processes or actions that are forbidden.
	Tip Indicates additional information.
	Reference to documentation
	Reference to page
	Reference to graphic
1. , 2. , 3. ...	Series of steps
	Result of a step
	Help in the event of a problem
	Visual inspection

1.2.5 Symbols in graphics

Symbol	Meaning
1, 2, 3 ...	Item numbers
1. , 2. , 3. ...	Series of steps
A, B, C, ...	Views
A-A, B-B, C-C, ...	Sections

1.3 Documentation

The document types listed are available:
In the Downloads area of the Endress+Hauser website: www.endress.com → Downloads

1.3.1 Technical Information (TI): planning aid for your device

TI00431P:

The document contains all the technical data on the device and provides an overview of the accessories and other products that can be ordered for the device.

1.3.2 Brief Operating Instructions (KA): getting the 1st measured value quickly

KA01189P:

The Brief Operating Instructions contain all the essential information from incoming acceptance to initial commissioning.

1.3.3 Safety Instructions (XA)

Depending on the approval, the following Safety Instructions (XA) are supplied with the device. They are an integral part of the Operating Instructions.

Directive	Type of protection	Category	Documentation	Option [1]
ATEX	Ex ia IIC	II 2 G	XA00454P	BD
ATEX	Ex nA IIC	II 3 G	XA00485P	BE
IECEx	Ex ia IIC	n/a	XA00455P	IC
CSA C/US	Ex ia IIC	n/a	ZD00232P (960008976)	CE
FM	AEx ia IIC	n/a	ZD00231P (960008975)	FE
NEPSI	Ex ia IIC	n/a	XA00456P	NA
INMETRO	Ex ia IIC	n/a	XA01066P	MA

1) Product Configurator order code for "Approval"

The nameplate indicates the Safety Instructions (XA) that are relevant to the device.

1.4 Terms and abbreviations

Term/abbreviation	Explanation
XA	Document type "Safety Instructions"
KA	Document type "Brief Operating Instructions"
BA	Document type "Operating Instructions"
SD	Document type "Special Documentation"
TD	**Turn down** Set span and zero-based span.

2 Basic safety instructions

2.1 Requirements concerning the staff

The personnel for installation, commissioning, diagnostics and maintenance must fulfill the following requirements:
- Trained, qualified specialists: must have a relevant qualification for this specific function and task
- Are authorized by the plant owner/operator
- Are familiar with federal/national regulations
- Before beginning work, the specialist staff must have read and understood the instructions in the Operating Instructions and supplementary documentation as well as in the certificates (depending on the application)
- Following instructions and basic conditions

The operating personnel must fulfill the following requirements:
- Being instructed and authorized according to the requirements of the task by the facility's owner-operator
- Following the instructions in these Operating Instructions

2.2 Designated use

2.2.1 Application and media

The Waterpilot FMX21 is a hydrostatic pressure sensor for measuring the level of fresh water, wastewater and salt water. The temperature is measured simultaneously in the case of sensor versions with a Pt100 resistance thermometer. An optional temperature head transmitter converts the Pt100 signal to a 4 to 20 mA signal with superimposed digital communication protocol HART 6.0.

2.2.2 Incorrect use

The manufacturer is not liable for damage caused by improper or non-designated use.

Verification for borderline cases:
- For special fluids and fluids for cleaning, Endress+Hauser is glad to provide assistance in verifying the corrosion resistance of fluid-wetted materials, but does not accept any warranty or liability.

2.3 Workplace safety

For work on and with the device:
- Wear the required personal protective equipment according to federal/national regulations.
- Switch off the supply voltage before connecting the device.

2.4 Operational safety

Risk of injury!
- Operate the device in proper technical condition and fail-safe condition only.
- The operator is responsible for interference-free operation of the device.

Modifications to the device

Unauthorized modifications to the device are not permitted and can lead to unforeseeable dangers.
- If, despite this, modifications are required, consult with Endress+Hauser.

Repairs

To ensure continued operational safety and reliability,
- Carry out repairs on the device only if they are expressly permitted.
- Observe federal/national regulations pertaining to repair of an electrical device.
- Use original spare parts and accessories from Endress+Hauser only.

Hazardous area

To eliminate danger to persons or the facility when the device is used in the approval-related area (e.g. explosion protection, pressure vessel safety):
- Check the nameplate to verify if the device ordered can be put to its intended use in the approval-related area.
- Observe the specifications in the separate supplementary documentation that is an integral part of these Instructions.

2.5 Product safety

This measuring device is designed in accordance with good engineering practice to meet state-of-the-art safety requirements, has been tested, and left the factory in a condition in which it is safe to operate.

It meets general safety standards and legal requirements. It also complies with the EC directives listed in the device-specific EC Declaration of Conformity. Endress+Hauser confirms this by affixing the CE mark to the device.

3 Product description

3.1 Function

The ceramic measuring cell is a dry measuring cell i.e. the pressure acts directly on the robust, ceramic process isolating diaphragm of the Waterpilot FMX21. Potential changes in air pressure are guided via a pressure compensation tube through the extension cable to the rear of the ceramic process isolating diaphragm and are compensated for. A pressure-dependent change in capacitance, caused by the movement of the process isolating diaphragm, is measured at the electrodes of the ceramic carrier. The electronics unit then converts this to a signal that is proportional to the pressure and linear to the level.

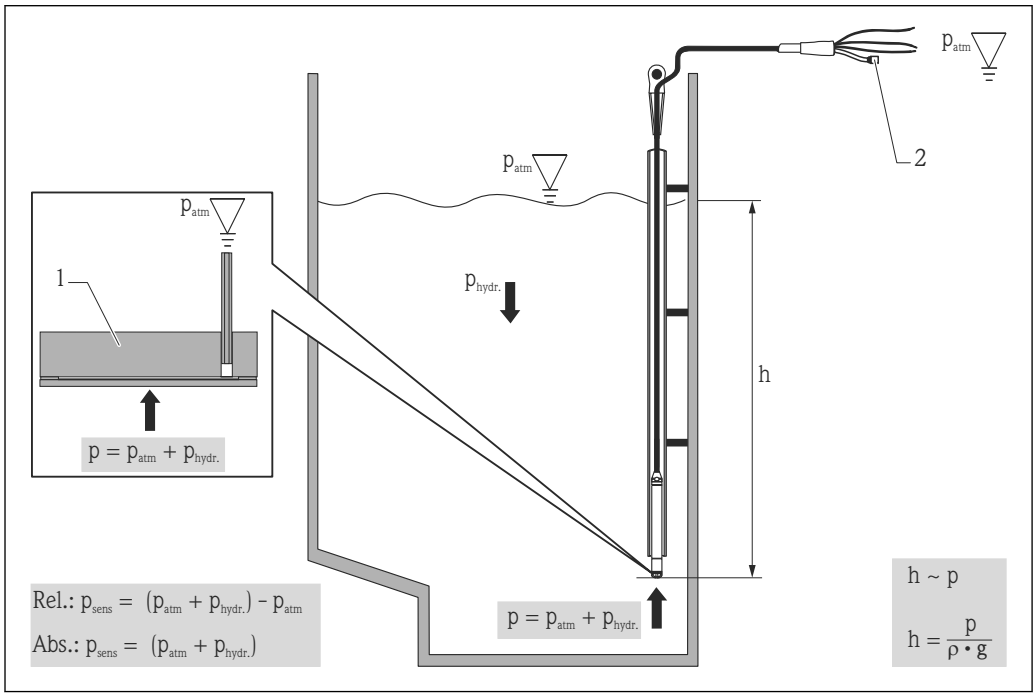

1 *Ceramic measuring cell*
2 *Pressure compensation tube*
h *Height level*
p *Total pressure = atmospheric pressure + hydrostatic pressure*
ρ *Density of the medium*
g *Acceleration due to gravity*
$P_{hydr.}$ *Hydrostatic pressure*
P_{atm} *Atmospheric pressure*
P_{sens} *Pressure displayed on the sensor*

4 Incoming acceptance and product identification

4.1 Incoming acceptance

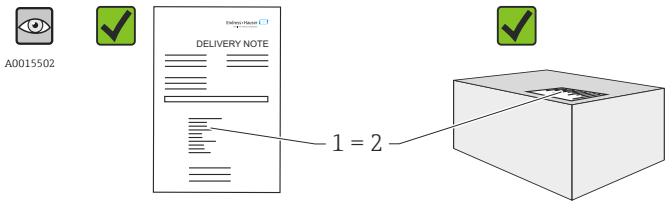

Is the order code on the delivery note (1) identical to the order code on the product sticker (2)?

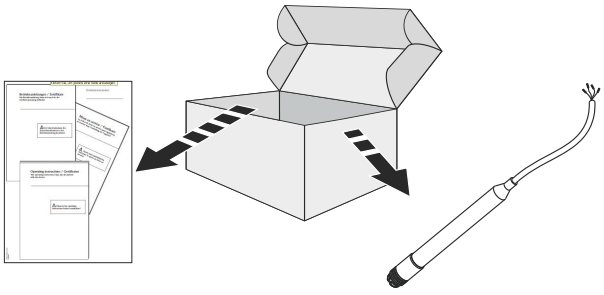

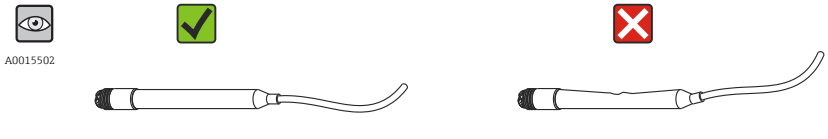

Are the goods undamaged?

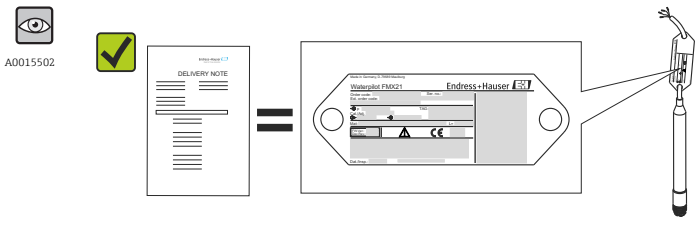

Do the data on the nameplate correspond to the order specifications and the delivery note?

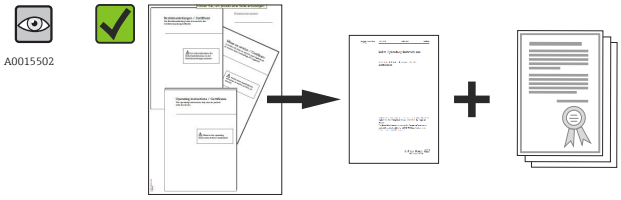

Is the documentation available?
If required (see nameplate): Are the safety instructions (XA) present?

If one of these conditions does not apply, please contact your Endress+Hauser sales office.

4.2 Product identification

The following options are available for identification of the measuring device:
- Nameplate specifications
- Order code with breakdown of the device features on the delivery note
- Enter serial numbers from nameplates in *W@M Device Viewer* (www.endress.com/deviceviewer): All information about the measuring device is displayed.

For an overview of the technical documentation provided, enter the serial number from the nameplates in the *W@M Device Viewer* (www.endress.com/deviceviewer)

4.3 Nameplates

4.3.1 Nameplates on extension cable

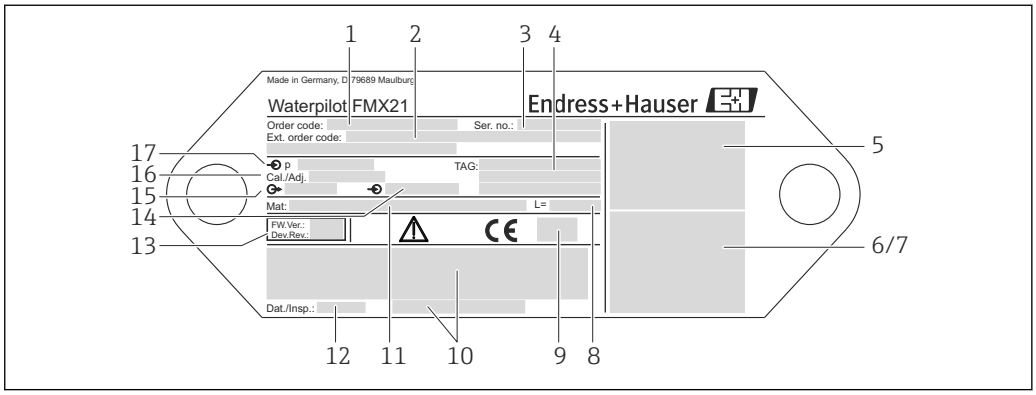

A0018802

1 *Order code (shortened for reordering); The meaning of the individual letters and digits is explained in the order confirmation details.*
2 *Extended order number (complete)*
3 *Serial number (for clear identification)*
4 *TAG (device tag)*
5 *FMX21 connection diagram*
6 *Pt100 connection diagram (optional)*
7 *Warning (hazardous area), (optional)*
8 *Length of extension cable*
9 *Approval symbol, e.g. CSA, FM, ATEX (optional)*
10 *Text for approval (optional)*
11 *Materials in contact with process*
12 *Test date (optional)*
13 *Software version/device version*
14 *Supply voltage*
15 *Output signal*
16 *Set measuring range*
17 *Nominal measuring range*

Additional nameplate for devices with approvals

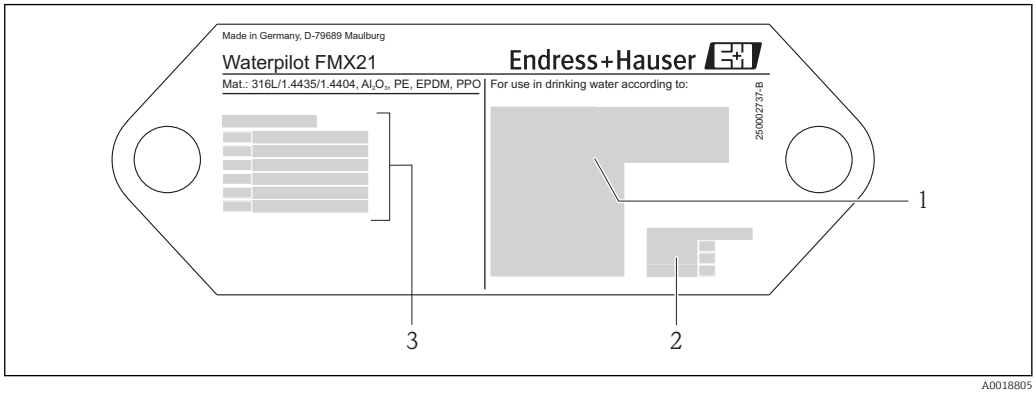

A0018805

1 *Approval symbol (drinking water approval)*
2 *Reference to associated documentation*
3 *Approval number (marine approval)*

4.3.2 Additional nameplate for devices with external diameter 22 mm (0.87 in) and 42 mm (1.65 in)

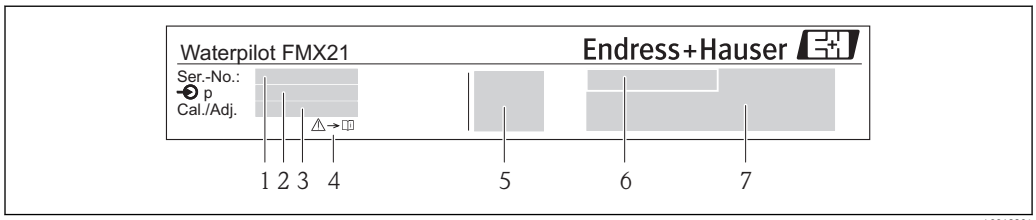

1 *Serial number*
2 *Nominal measuring range*
3 *Set measuring range*
4 *CE mark or approval symbol*
5 *Certificate number (optional)*
6 *Text for approval (optional)*
7 *Reference to documentation*

4.4 Identification of sensor type

With relative pressure or absolute pressure sensors, the "Pos.zero adjust" parameter is displayed in the operating menu. With absolute pressure sensors, the "Calib. offset" parameter is displayed in the operating menu.

4.5 Storage and transport

4.5.1 Storage conditions

Use original packaging.

Store the measuring device in clean and dry conditions and protect from damage caused by shocks (EN 837-2).

Storage temperature range

- FMX21: −40 to +80 °C (−40 to +176 °F)
- TMT182: −40 to +100 °C (−40 to +212 °F)
- Terminal box: −40 to +80 °C (−40 to +176 °F)

4.5.2 Transporting the product to the measuring point

⚠ WARNING

Incorrect transport!

Device or cable may become damaged, and there is a risk of injury!

- ▶ Transport measuring device in the original packaging.
- ▶ Follow the safety instructions and transport conditions for devices weighing more than 18 kg (39.6 lbs).

4.6 Scope of delivery

The scope of delivery comprises:

- Waterpilot FMX21, optionally with integrated Pt100 resistance thermometer
- Optional accessories

Documentation supplied:
- The Operating Instructions BA00380P are available on the internet. → see: www.de.endress.com → Downloads.
- Brief Operating Instructions KA01189P
- Final inspection report
- Drinking water approvals (optional): SD00289P, SD00319P, SD00320P
- Devices that are suitable for use in hazardous areas: Additional documentation e.g. Safety Instructions (XA, ZD)

5 Installation

5.1 Installation conditions

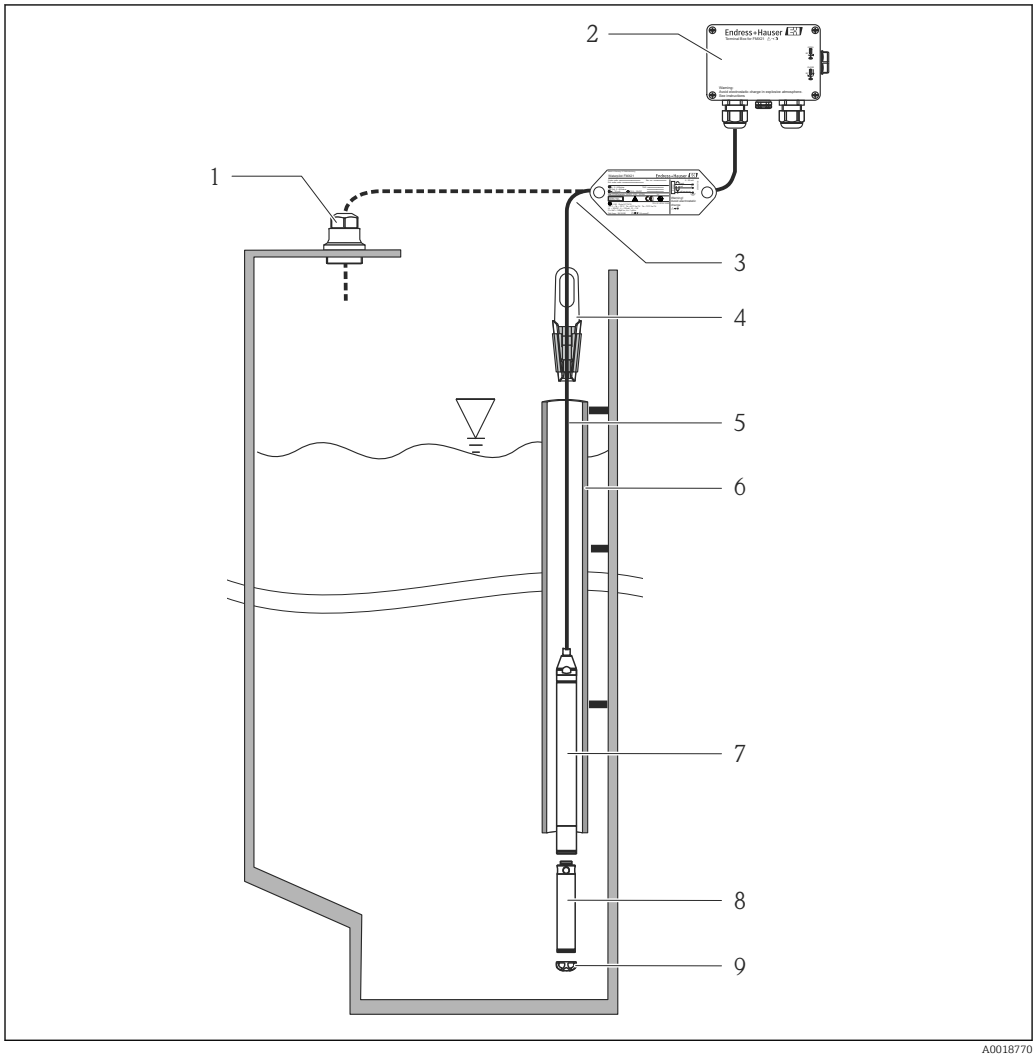

1 *Cable mounting screw (can be ordered as an accessory)*
2 *Terminal box (can be ordered as an accessory)*
3 *Bending radius of extension cable > 120 mm (4.72 in)*
4 *Mounting clamp (can be ordered as an accessory)*
5 *Extension cable*
6 *Guide tube*
7 *Waterpilot FMX21*
8 *Additional weight can be ordered as an accessory for the FMX21 with external diameter of 22 mm (0.87 in) and 29 mm (1.14 in)*
9 *Protection cap*

5.2 Additional mounting instructions

- Cable length
  - Customer-specific in meters or feet.
  - Limited cable length when performing installation with freely suspended device with cable mounting screw or mounting clamp, as well as for FM/CSA approval: max. m/ft. 300 m (984 ft).
- Sideways movement of the level probe can result in measuring errors. For this reason, install the probe at a point free from flow and turbulence, or use a guide tube. The internal diameter of the guide tube should be at least 1 mm (0.04 in) greater than the external diameter of the selected FMX21.
- To avoid mechanical damage to the measuring cell, the device is equipped with a protection cap.
- The cable must end in a dry room or a suitable terminal box. The terminal box from Endress+Hauser provides optimum protection from the effects of humidity and weather conditions and is suitable for outdoor installation→ 🖹 118.
- Cable length tolerance: < 5 m (16 ft): ±17.5 mm (0.69 in); > 5 m (16 ft): ±0.2 %
- If the cable is shortened, the filter at the pressure compensation tube must be reattached. Endress+Hauser offers a cable shortening kit for this purpose (documentation SD00552P/00/A6).
- Endress+Hauser recommends using twisted, shielded cable.
- In shipbuilding applications, measures are required to restrict the spread of fire along cable looms.
- The length of the extension cable depends on the intended level zero point. The height of the protection cap must be taken into consideration when designing the layout of the measuring point. The level zero point (E) corresponds to the position of the process isolating diaphragm. Level zero point = E; tip of probe = L (see the following diagram).

5.3 Dimensions

For dimensions, please refer to the Technical Information TI00431P/00/EN, "Mechanical construction" section (see also: www.de.endress.com → Downloads → Media Type: Documentation).

5.4 Mounting the Waterpilot with a mounting clamp

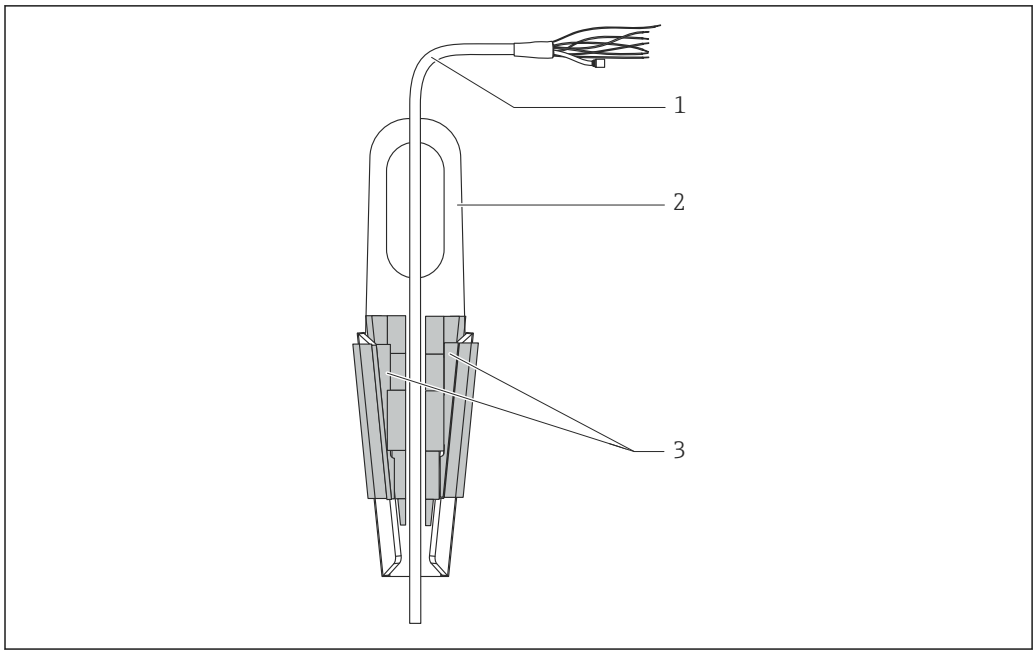

1 Extension cable
2 Suspension clamp
3 Clamping jaws

5.4.1 Mounting the suspension clamp:

1. Installing the mounting clamp (item 2) . When selecting the place to attach the unit, note the weight of the extension cable (item 1) and of the device.
2. Raise the clamping jaws (item 3). Hold the extension cable in position (item 1) between the clamping jaws as illustrated in the diagram.
3. Hold the extension cable in position (item 1) and push the clamping jaws (item 3) back down. Tap the clamping jaws gently from above to fix them in place.

5.5 Mounting the Waterpilot with a cable mounting screw

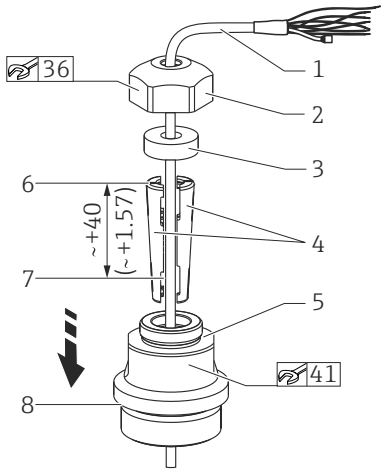

1 *Extension cable*
2 *Cover for cable mounting screw*
3 *Sealing ring*
4 *Clamping sleeves*
5 *Adapter for cable mounting screw*
6 *Top edge of clamping sleeve*
7 *Desired length of extension cable and Waterpilot probe prior to assembly*
8 *After assembly, item 7 is located next to the mounting screw with G 1½" thread: height of sealing surface of the adapter or NPT 1½" thread height of thread run-out of adapter*

Engineering unit mm (in). Illustrated with G 1½" thread

If you want to lower the level probe to a certain depth, position the top edge of the clamping sleeve 40 mm (4.57 in) higher than the required depth. Then push the extension cable and the clamping sleeve into the adapter as described in Step 6 in the following section.

5.5.1 Mount cable mounting screw with G 1½" or NPT 1½" thread:

1. Mark the desired length of extension cable on the extension cable
2. Insert the probe through the measuring aperture and carefully lower on the extension cable. Fix the extension cable to prevent it from slipping.
3. Push the adapter (item 5) over the extension cable and screw it tightly into the measuring aperture.
4. Push the sealing ring (item 3) and cover (item 2) onto the cable from above. Press the sealing ring into the cover.
5. Place clamping sleeves (item 4) around the extension cable (item 1) at the marked position as illustrated in the diagram.
6. Push the extension cable with the clamping sleeves (item 4) into the adapter (item 5)
7. Slide the cover (item 2) with sealing ring (item 3) onto the adapter (item 5) and screw tightly to the adapter.

To remove the cable mounting screw, perform this sequence of steps in reverse.

CAUTION

Risk of injury!

- Use only in unpressurized vessels.

5.6 Mounting the terminal box

The optional terminal box is mounted using four screws (M4). For the dimensions of the terminal box, please see the Technical Information TI00431P/00/ EN, "Mechanical construction" section (see also: www.de.endress.com → Downloads → Media Type: Documentation).

5.7 Mounting the TMT182 temperature head transmitter with terminal box

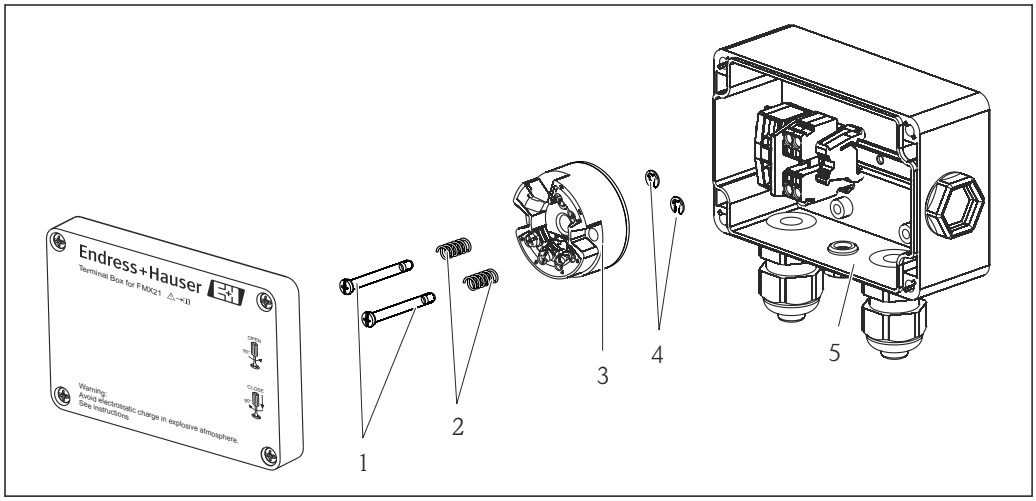

1 *Mounting screws*
2 *Mounting springs*
3 *TMT182 temperature head transmitter*
4 *Circlips*
5 *Terminal box*

Only open the terminal box with a screwdriver.

WARNING

Risk of explosion!

▶ The TMT182 is not designed for use in hazardous areas.

5.7.1 Mounting the temperature head transmitter:

1. Guide the mounting screws (item 1) with the mounting springs (item 2) through the hole in the temperature head transmitter (item 3)
2. Secure the mounting screws with the circlips (item 4). Circlips, mounting screws and springs are included in the scope of delivery for the temperature head transmitter.
3. Screw the temperature head transmitter into the field housing tightly. (width of screwdriver blade max. 6 mm (0.24 in))

NOTICE

Avoid damage to the temperature head transmitter.

▶ Do not overtighten the mounting screw too.

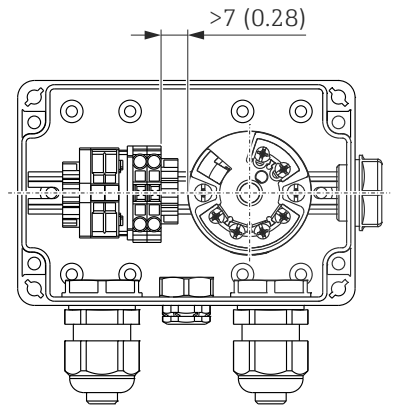

Engineering unit mm (in)

NOTICE

Incorrect connection!

- A distance of >7 mm (> 0.28) must be maintained between the terminal strip and the TMT182 temperature head transmitter.

5.8 Mounting the terminal strip for the Pt100 passive (without TMT182)

If the FMX21 with optional Pt100 is supplied without the optional TMT182 temperature head transmitter, a terminal strip is provided with the terminal box for the purpose of wiring the Pt100.

⚠ WARNING

Risk of explosion!

- The Pt100, as well as the terminal strip, are not designed for use in hazardous areas.

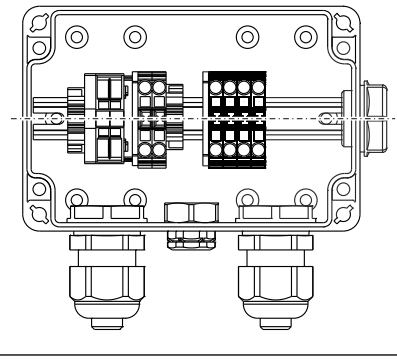

5.9 Post-installation check

❑	Is the device undamaged (visual inspection)?
❑	Does the device conform to the measuring point specifications? For example: ▪ Process temperature ▪ Process pressure ▪ Ambient temperature ▪ Measuring range
❑	Are the measuring point identification and labeling correct (visual inspection)?

❑	Is the device adequately protected from precipitation and direct sunlight?
❑	Check that all screws are firmly seated.

6 Electrical connection

⚠ WARNING

Electrical safety is compromised by an incorrect connection!

- When using the measuring device in a hazardous area, the relevant national standards and guidelines as well as the Safety Instructions (XAs) or installation or control drawings (ZDs) must be adhered to. All data relating to explosion protection can be found in separate documentation which is available on request. This documentation is supplied with the devices as standard → 🖹 7

6.1 Connecting the device

⚠ WARNING

Electrical safety is compromised by an incorrect connection!

- The supply voltage must match the supply voltage specified on the nameplate → 🖹 13
- Switch off the supply voltage before connecting the device.
- The cable must end in a dry room or a suitable terminal box. The IP66/IP67 terminal box with GORE-TEX® filter from Endress+Hauser → 🖹 20 is suitable for outdoor installation.
- Connect the device in accordance with the following diagrams. Reverse polarity protection is integrated into the Waterpilot FMX21 and the TMT182 temperature head transmitter. Changing the polarities will not result in the destruction of the devices.
- A suitable circuit breaker should be provided for the device in accordance with IEC/EN 61010.

6.1.1 Waterpilot with Pt100

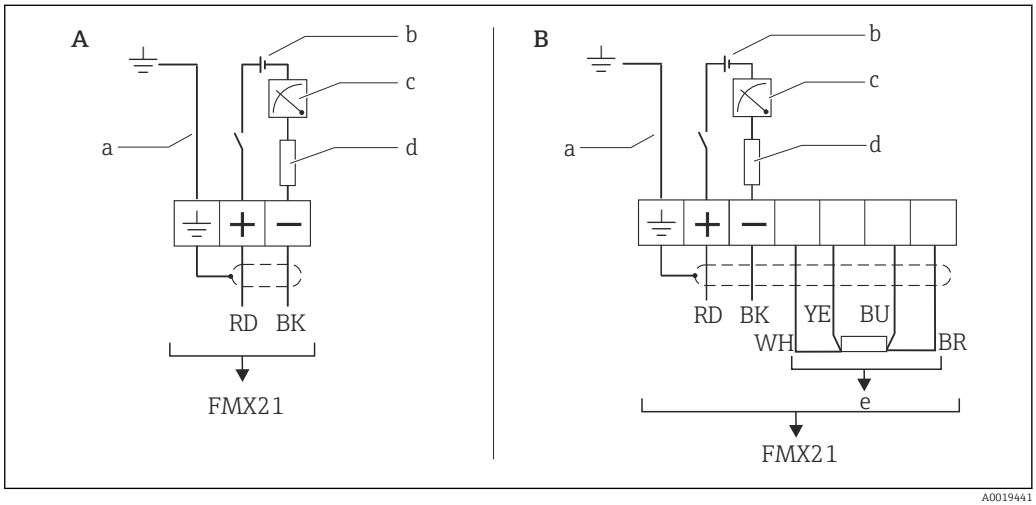

A Waterpilot FMX21
B Waterpilot FMX21 with Pt100 (not for use in hazardous areas); option "NB", Product Configurator order code for "Accessories"
a Not for the FMX21 with external diameter of 29 mm (1.14 in)
b 10.5 to 30 V DC (hazardous area), 10.5 to 35 V DC
c 4...20 mA
d Resistance (R_L)
e Pt100

6.1.2 Waterpilot with Pt100 and TMT182 temperature head transmitter (4 to 20 mA)

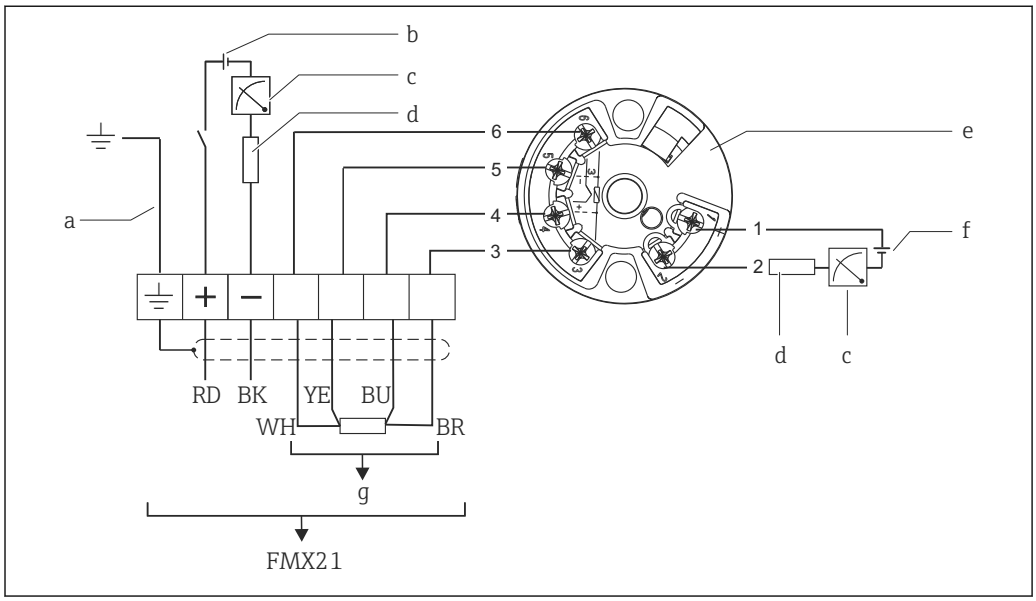

a Not for the FMX21 with external diameter of 29 mm (1.14 in)
b 10.5 to 35 V DC
c 4...20 mA
d Resistance (R_L)
e Temperature head transmitter TMT182 (4 to 20 mA) (not for use in hazardous areas)
f 11.5 to 35 V DC
g Pt100

Ordering information: options "NB" and "PT", Product Configurator order code for "Accessories mounted" and "Accessories enclosed"

6.1.3 Wire colors

RD = red, BK = black, WH = white, YE = yellow, BU = blue, BR = brown

Connection classification as per IEC 61010-1:
- Overvoltage category 1
- Pollution level 1

6.1.4 Connection data

Connection classification as per IEC 61010-1:
- Overvoltage category 1
- Pollution level 1

Connection data in the hazardous area

See relevant XA.

6.2 Supply voltage

⚠ WARNING

Supply voltage might be connected!
Risk of electric shock and/or explosion!

- ▶ When using the measuring device in hazardous areas, installation must comply with the corresponding national standards and regulations as well as the Safety Instructions.
- ▶ All explosion protection data are given in separate documentation which is available upon request. The Ex documentation is supplied as standard with all devices approved for use in explosion hazardous areas.

6.2.1 FMX21 + Pt100 (optional)

- 10.5 to 35 V (not hazardous areas)
- 10.5 to 30 V (hazardous areas)

6.2.2 TMT182 temperature head transmitter (optional)

11.5 to 35 V DC

6.3 Cable specifications

In the following cases, Endress+Hauser recommends the use of a shielded cable as the cable extension:

- For large distances between the end of the extension cable and the display and/or evaluation unit
- For large distances between the end of the extension cable and the temperature head transmitter
- When directly connecting the Pt100 signal to a display and/or evaluation unit

The extension cables are shielded for device versions with external diameters of 22 mm (0.87 in) and 42 mm (1.65 in).

6.3.1 FMX21 + Pt100 (optional)

- Commercially available instrument cable
- Terminals, terminal box: 0.08 to 2.5 mm^2 (28 to 14 AWG)

6.3.2 TMT182 temperature head transmitter (optional)

- Commercially available instrument cable
- Terminals, terminal box: 0.08 to 2.5 mm^2 (28 to 14 AWG)
- Transmitter connection: max. 1.75 mm^2 (15 AWG)

6.4 Power consumption

6.4.1 FMX21 + Pt100 (optional)

- ≤ 0.805 W at 35 V DC (non-hazardous area)
- ≤ 0.690 W at 30 V DC (hazardous area)

6.4.2 TMT182 temperature head transmitter (optional)

≤ 0.805 W at 35 V DC

6.5 Current consumption

6.5.1 FMX21 + Pt100 (optional)

- Max. current consumption: ≤ 23 mA
  Min. current consumption: ≥ 3.6 mA
- Pt100: ≤ 0.6 mA

6.5.2 TMT182 temperature head transmitter (optional)

- Max. current consumption: ≤ 23 mA
- Min. current consumption: ≥ 3.5 mA
- Pt100 via temperature head transmitter: ≤ 0.6 mA

6.6 Maximum load

The maximum load resistance depends on the supply voltage (U) and must be determined individually for each current loop, see formula and diagrams for FMX21 and temperature head transmitter.

The total resistance resulting from the resistances of the connected devices, the connecting cable and, where applicable, the resistance of the extension cable may not exceed the load resistance value.

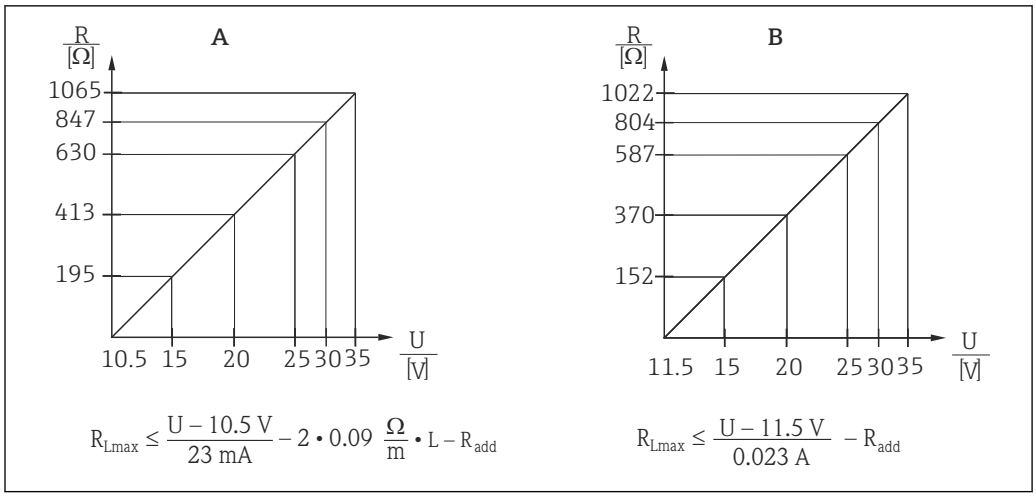

A0026500-EN

A FMX21 load chart for estimating the load resistance. Additional resistances, such as the resistance of the extension cable, have to be subtracted from the value calculated as shown in the equation.
B Load diagram for TMT182 temperature head transmitter for estimating the load resistance. Additional resistances must be subtracted from the value calculated as shown in the equation
R_{Lmax} Max. load resistance [Ω]
R_{add} Additional resistances, such as resistance of the evaluation unit and/or display unit, cable resistance [Ω]
U Supply voltage [V]
L Basic length of extension cable [m] (cable resistance per wire 0.09 Ω/m)

- When using the measuring device in a hazardous area, the relevant national standards and regulations as well as the Safety Instructions or installation or control drawings (XA) must be adhered to.
- When operating via a handheld terminal or via a PC with an operating program, a minimum communication resistance of 250 Ω must be taken into account.

6.7 Connecting the measuring unit

6.7.1 Overvoltage protection

To protect the Waterpilot and the TMT182 temperature head transmitter from large interference voltage peaks, Endress+Hauser recommends installing overvoltage protection upstream and downstream of the display and/or evaluation unit as shown in the graphic.

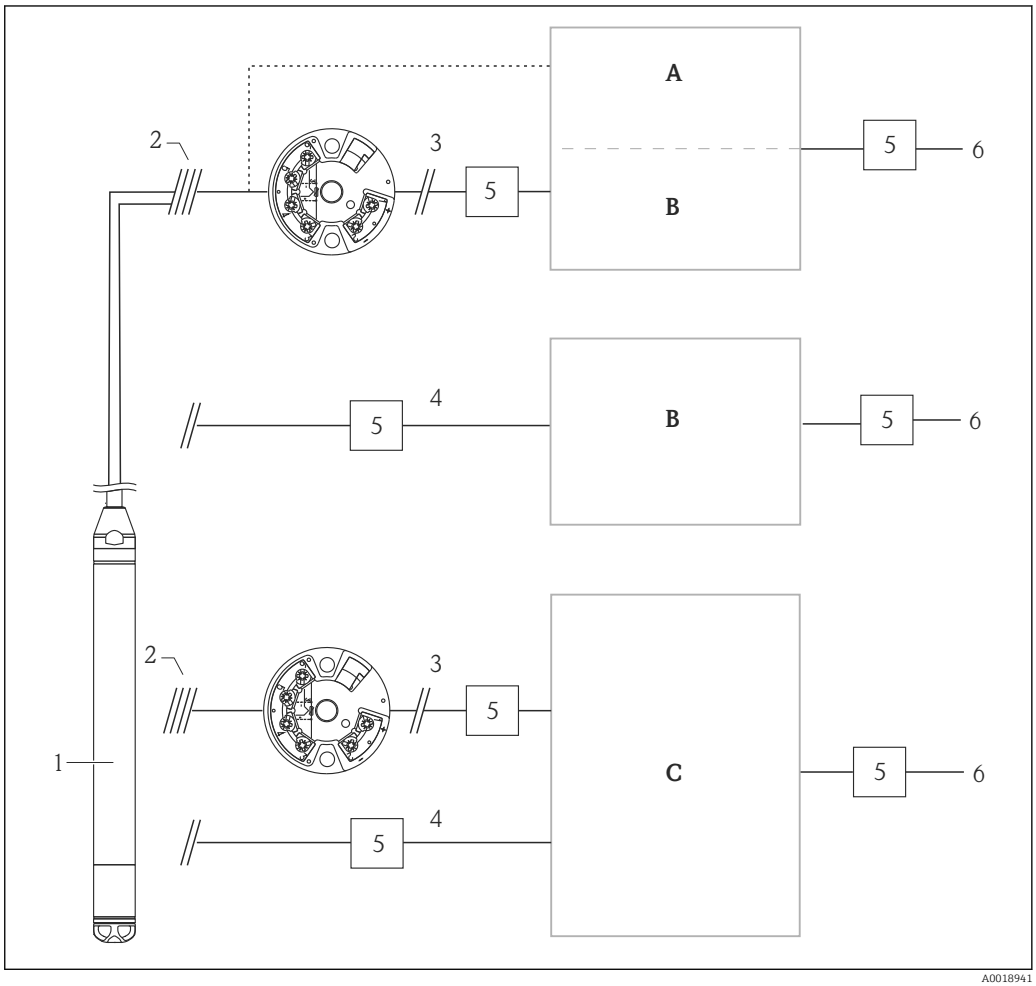

A Power supply, display and evaluation unit with one input for Pt100
B Power supply, display and evaluation unit with one input for 4 to 20 mA
C Power supply, display and evaluation unit with two inputs for 4 to 20 mA
1 Waterpilot FMX21 HART
2 Connection for integrated Pt100 in the FMX21
3 4 to 20 mA HART (temperature)
4 4 to 20 mA HART (level)
5 Overvoltage protection, e.g. HAW from Endress+Hauser (not for use in hazardous areas).
6 Power supply

Further information on the TMT182 temperature head transmitter for HART applications from Endress+Hauser can be found in the Technical Information TI00078R/09/EN.

6.7.2 Connecting the Commubox FXA195

The Commubox FXA195 connects intrinsically safe transmitters with HART protocol to the USB interface of a computer. This enables remote operation of the transmitter using the Endress+Hauser operating program FieldCare. The power is supplied to the Commubox via

the USB interface. The Commubox is also suitable for connecting to intrinsically safe circuits. For further information, see the Technical Information TI00404F/00/EN.

6.7.3 Connecting the Field Xpert SFX

Compact, flexible and robust industrial handheld terminal for remote configuration and for obtaining measured values via the HART current output (4 to 20 mA). For details, see Operating Instructions BA00060S/04/EN.

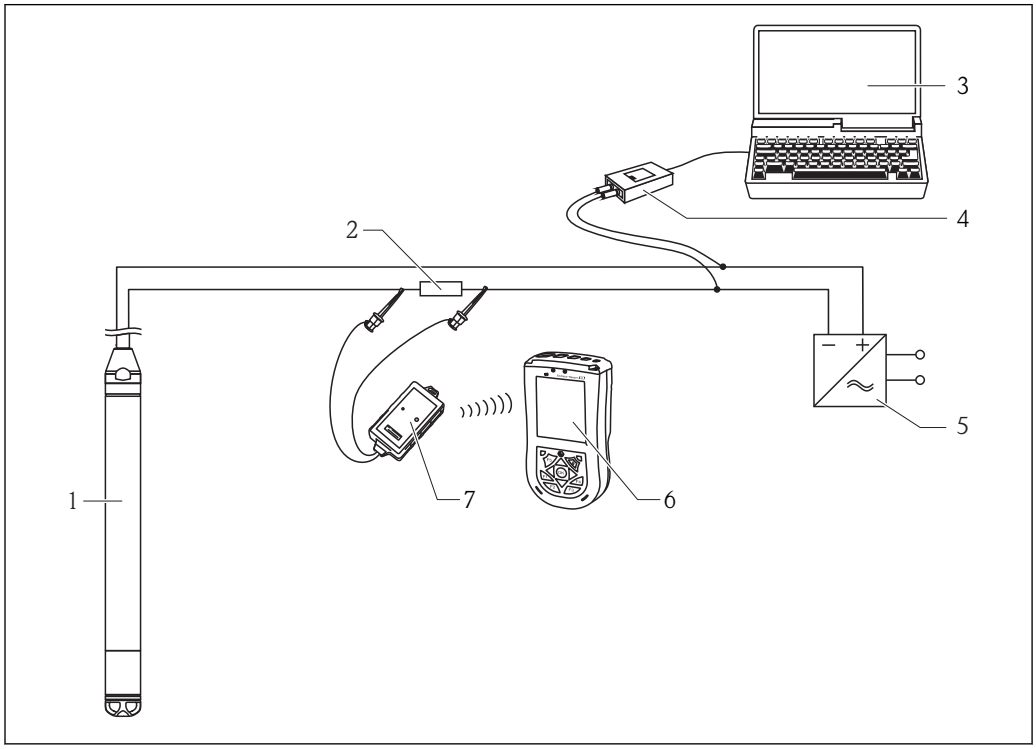

1 *Waterpilot FMX21*
2 *Required communication resistor ≥ 250 Ω*
3 *Computer with operating tool (e.g. FieldCare)*
4 *Commubox FXA195 (USB)*
5 *Transmitter power supply unit, e.g. RN221N (with communication resistor)*
6 *Field Xpert SFX*
7 *VIATOR Bluetooth modem with connecting cable*

Only use certified operating devices in hazardous area!

⚠ WARNING

Risk of explosion!

- ▶ Do not change the battery of the handheld terminal in the hazardous area.
- ▶ When using the measuring device in a hazardous area, the relevant national standards and regulations as well as the Safety Instructions (XAs) or installation or control drawings (ZDs) must be adhered to.

6.7.4 Connecting for air pressure compensation with external measured value

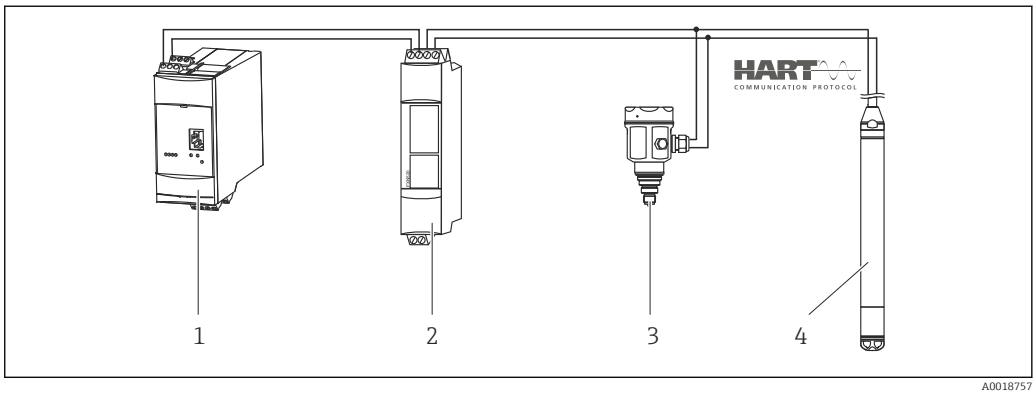

1 Fieldgate FXA520
2 Multidrop connector FXN520
3 Cerabar
4 Waterpilot FMX21

For applications in which condensation may occur, the use of an absolute pressure probe is recommended. For level measurement using an absolute pressure probe, the measured value is affected by fluctuations in the ambient air pressure. To correct the resulting measured error, you can connect an external absolute pressure sensor (e.g. Cerabar) to the HART signal cable, switch the Waterpilot to burst mode and operate the Cerabar in "Electr. Delta P" mode.

By switching on the "Electr. Delta P" application, the external absolute pressure sensor calculates the difference between the two pressure signals and can thus determine the level precisely. Only one level measured value can be corrected in this way.

If using intrinsically safe devices, the regulations which apply to interconnecting intrinsically safe circuits as outlined in IEC 60079-14 (proof of intrinsic safety) must be observed.

6.7.5 Connecting an external temperature sensor/temperature head transmitter for density compensation

The Waterpilot FMX21 can correct measured errors that result from fluctuations in the density of the water caused by temperature. Users can choose from the following options:

Use the internally measured sensor temperature of the FMX21

The internally measured sensor temperature is calculated in the Waterpilot FMX21 for density compensation. The level signal is thus corrected according to the density characteristic line of the water.

Use the optional internal Pt100 temperature sensor for density compensation in a suitable HART master (e.g. PLC)

The Waterpilot FMX21 is available with an optional Pt100 temperature sensor. Endress +Hauser additionally offers the TMT182 temperature head transmitter to convert the Pt100 signal to a 4 to 20 mA HART signal. The temperature and pressure signal is requested by a HART master (e.g. PLC), where a corrected level value can be generated using a stored linearization table or density function (of a chosen medium).

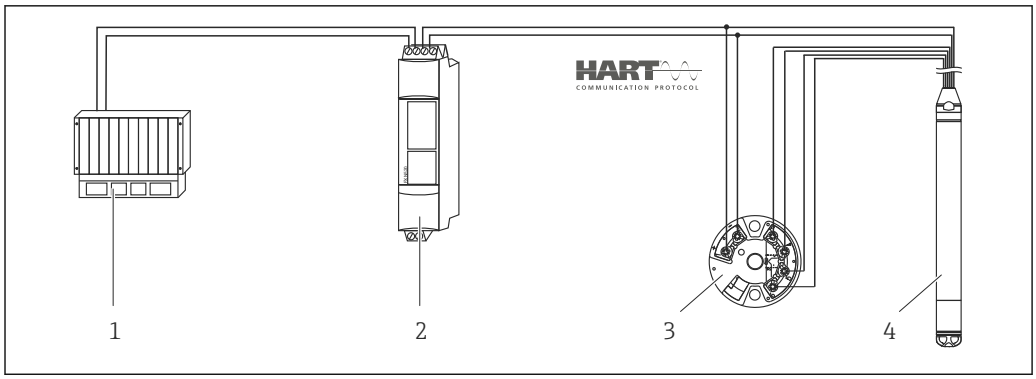

A0018763

1 *HART master, e.g. PLC (programmable logic controller)*
2 *Multidrop connector FXN520*
3 *Temperature head transmitter TMT182*
4 *Waterpilot FMX21*

Use an external temperature signal which is transmitted to the FMX21 via HART burst mode

The Waterpilot FMX21 is available with an optional Pt100 temperature sensor. In this case, the signal of the Pt100 is analyzed using a HART-compliant (min. HART 5.0) temperature head transmitter that supports burst mode. The temperature signal can thus be transmitted to the FMX21. The FMX21 uses this signal for density correction of the level signal.

The TMT182 temperature head transmitter is not suitable for this configuration.

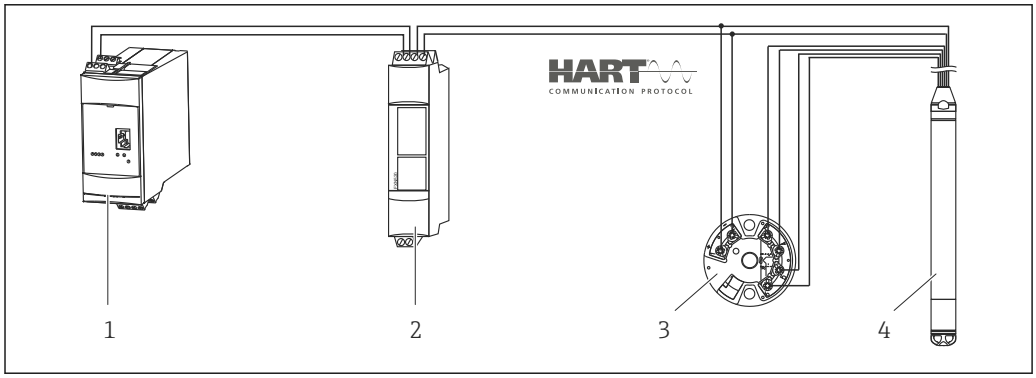

A0018764

1 *Fieldgate FXA520*
2 *Multidrop connector FXN520*
3 *Temperature head transmitter TMT182 (burst mode)*
4 *Waterpilot FMX21*

Without additional compensation due to the anomaly of water, errors of up to 4% may occur at a temperature of +70 °C (+158 °F), for example. With density compensation, this error can be decreased to 0.5 % in the entire temperature range from 0 to +70 °C (+32 to +158 °F).

For further information on the devices, please refer to the relevant Technical Information:
- TI00078R: Temperature head transmitter TMT182 (4 to 20 mA HART)
- TI00369F: Fieldgate FXA520
- TI00400F: Multidrop connector FXN520

6.8 Post-connection check

❑	Is the device or cable undamaged (visual check)?
❑	Do the cables comply with the requirements ?
❑	Do the cables have adequate strain relief?
❑	Are all cable glands installed, securely tightened and leak-tight?
❑	Does the supply voltage match the specifications on the nameplate?
❑	Is the terminal assignment correct ?

7 Operation options

Endress+Hauser offers comprehensive measuring point solutions with display and/or evaluation units for the Waterpilot FMX21 and TMT182 temperature head transmitter.

Your Endress+Hauser service organization would be glad to be of service if you have any other questions. Contact addresses can be found on the website at www.endress.com/worldwide

7.1 Overview of operating options

7.1.1 Operation using Endress+Hauser operating program

The FieldCare operating program is an Endress+Hauser plant asset management tool based on FDT technology. With FieldCare, you can configure all Endress+Hauser devices as well as devices from other manufacturers that support the FDT standard.

Hardware and software requirements can be found on the Internet:

www.de.endress.com → Search: FieldCare → FieldCare → Technical Data.

FieldCare supports the following functions:
- Configuration of transmitters in online/offline mode
- Loading and saving device data (upload/download)
- Documentation of the measuring point

Connection options:
- HART via Commubox FXA195 and the USB port of a computer
- HART via FXA520 Fieldgate

- Further information on FieldCare and software download can be found on the internet (www.de.endress.com ® Downloads ® Text Search: FieldCare).
- Connecting the Commubox FXA195
- As not all internal device dependencies can be mapped in offline operation, the consistency of the parameters must be checked once again before they are transmitted to the device.

7.1.2 Operation using Field Xpert SFX

Compact, flexible and robust industrial handheld terminal for remote configuration and for obtaining measured values via the HART current output or FOUNDATION Fieldbus. For details, see the Operating Instructions BA00060S/04.

7.2 Operating concept

Operation with an operating menu is based on an operation concept with "user roles" .

User role	Meaning
Operator	Operators are responsible for the devices during normal "operation". This is usually limited to reading process values either directly at the device or in a control room. If the work with the devices goes beyond reading, it concerns simple, application-specific functions that are used in operation. Should an error occur, these users simple forward the information on the errors but do not intervene themselves.
Maintenance	Service engineers usually work with the devices in the phases following device commissioning. They are primarily involved in maintenance and troubleshooting activities for which simple settings have to be made at the device. Technicians work with the devices over the entire life cycle of the product. Thus, commissioning and advanced settings and configurations are some of the tasks they have to carry out.
Expert	Experts work with the devices over the entire life cycle of the device, but, in part, have high requirements on the devices. Individual parameters/functions from the overall functionality of the devices are required for this purpose time and again. In addition to technical, process-oriented tasks, experts can also perform administrative tasks (e.g. user administration). "Experts" can avail of the entire parameter set.

7.3 Structure of the operating menu

User role	Submenu	Meaning/use
Operator	Display/ operat.	Contains parameters that are needed to configure the measured value display (selecting the values displayed, display format, etc.). With this submenu, users can change the measured value display without affecting the actual measurement.
Maintenance	setup	Contains all the parameters that are needed to commission measuring operations. This submenu has the following structure: ▪ **Standard setup parameters** A wide range of parameters, which can be used to configure a typical application, is available at the start. The measuring mode selected determines which parameters are available. After making settings for all these parameters, the measuring operation should be completely configured in the majority of cases. ▪ **"Extended setup" submenu** The "Extended setup" submenu contains additional parameters for more in-depth configuration of the measurement operation, for conversion of the measured value and for scaling the output signal. This menu is split into additional submenus depending on the measuring mode selected.

User role	Submenu	Meaning/use
Maintenance	Diagnosis	Contains all the parameters that are needed to detect and analyze operating errors. This submenu has the following structure: ▪ **Diagnostic list** contains up to 10 currently pending error messages. ▪ **Event logbook** contains the last 10 error messages (no longer pending). ▪ **Instrument info** contains information for identifying the device. ▪ **Measured values** contains all current measured values. ▪ **Simulation** Is used to simulate pressure, level, current and alarm/warning. ▪ **Enter reset code**
Expert	Expert	Contains all the parameters of the device (including those already in one of the submenus). The "Expert" submenu is structured by the function blocks of the device. It thus contains the following submenus: ▪ **System** contains all device parameters that do not affect either measurement or integration into a distributed control system. ▪ **Measurement** contains all parameters for configuring the measurement. ▪ **Output** contains all parameters for configuring the current output. ▪ **Communication** contains all parameters for configuring the HART interface. ▪ **Diagnosis** contains all parameters required to detect and analyze operating errors.

7.4 Locking/unlocking operation

Once you have entered all the parameters, you can lock your entries against unauthorized and undesired access.

The "Operator code" parameter is used to lock/unlock the device.

Operator code

Navigation Setup → Extended setup → Operator code

Read permission Operators/Service engineers/Expert

Write permission Operators/Service engineers/Expert

Description Use this function to enter a code to lock or unlock operation.

User entry
- To lock: Enter a number ≠ the release code (value range: 1 to 65535).
- To unlock: Enter the release code.

Factory setting 0

Note The release code is "0" in the order configuration. Another release code can be defined in the "Code definition" parameter. If the user has forgotten the release code, the release code can be visible by entering the number "5864".

The release code is defined in the "Code definition" parameter.

Code definition

Navigation Setup → Extended setup → Code definition

Read permission Operators/Service engineers/Expert

Write permission Operators/Service engineers/Expert

Description Use this function to enter a release code with which the device can be unlocked.

User entry A number from 0 to 9999

Factory setting 0

7.5 Resetting to factory settings (reset)

By entering a certain code, you can completely or partially reset the entries for the parameters to the factory settings [1]. Enter the code via the "Enter reset code" parameter (menu path: "Diagnosis" → "Enter reset code").

There are various reset codes for the device. The following table illustrates which parameters are reset by the particular reset codes. To perform a reset, operation must be unlocked (see "Locking/unlocking operation" section → 34).

Any customer-specific configuration carried out at the factory is not affected by a reset (customer-specific configuration remains). If you want to change the customer-specific configuration carried out at the factory, please contact Endress+Hauser Service. As there is no separate service level, the order code and serial number can be changed without a specific release code.

Reset code [1]	Description and effect
62	**PowerUp reset (warm start)** ▪ The device is restarted. ▪ Data is read back anew from the EEPROM (process is reinitialized). ▪ Any simulation which may be running is ended.
333	**User reset** ▪ This code resets all the parameters apart from: - Device tag - Linearization table - Operating hours - Event logbook - Curr. trim 4 mA - Curr. trim 20 mA ▪ Any simulation which may be running is ended. ▪ The device is restarted.
7864	**Total reset** ▪ This code resets all the parameters apart from: - Operating hours - Event logbook ▪ Any simulation which may be running is ended. ▪ The device is restarted.

1) To be entered in "System" → "Management" → "Enter reset code"

After a "Total reset" in FieldCare you have to press the "refresh" button in order to ensure that the measuring units are also reset.

1) . The factory setting for the individual parameters is specified in the parameter description

8 Integrating device via HART® protocol

Version data for the device

Firmware version	01.00.zz	▪ On the title page of the Operating instructions ▪ On nameplate ▪ **Firmware Version** parameter Diagnosis→ Instrument info → Firmware version
Manufacturer ID	17 (0x11)	**Manufacturer ID.** parameter Diagnosis → Instrument info→ Manufacturer ID
Device type code	36 (0x24)	**Device type** parameter Diagnosis → Instrument info → Device type
HART protocol revision	6.0	---
Device revision	1	▪ On transmitter nameplate ▪ **Device revision** parameter Diagnosis→ Instrument info → Device revision

The suitable device description file (DD) for the individual operating tools is listed in the table below, along with information on where the file can be acquired.

Operating tools

Operating tool	Reference sources for device descriptions (DD and DTM)
FieldCare	▪ www.endress.com → Downloads area ▪ CD–ROM (contact Endress+Hauser) ▪ DVD (contact Endress+Hauser)
AMS Device Manager (Emerson Process Management)	www.endress.com → Downloads area
SIMATIC PDM (Siemens)	www.endress.com → Downloads area
Field Communicator 375, 475 (Emerson Process Management)	Use update function of handheld terminal

8.1 HART process variables and measured values

The following numbers are assigned to the process variables in the factory:

Process variable	Meas.	Level	
		Linear	Table active
First process variable (Primary variable)	0 (Pressure measured)	8 (Level before linearization)	9 (Tank content)
Second process variable (Secondary variable)	2 (Corrected press.)	0 (Pressure measured)	8 (Level before linearization)

Process variable	Meas.	Level	
		Linear	Table active
Third process variable (Tertiary variable)	3 (Sensor pressure)	2 (Corrected press.)	0 (Pressure measured)
Fourth process variable (Quaternary variable)	4 (Sensor temp.)		

The assignment of the device variables to the process variable is displayed in the **Expert → Communication → HART output** menu.

The assignment of the device variables to the process variable can be changed using HART command 51.

An overview of the possible device variables can be found in the following section.

8.2 Device variables and measured values

The following measured values are assigned to the individual device variables:

Device variable code	Device variable	Measured value	
0	PRESSURE_1_FINAL_VALUE	Pressure measured	All
1	PRESSURE_1_AFTER_DAMPING	Press after damping	All
2	PRESSURE_1_AFTER_CALIBRATION	Corrected press.	All
3	PRESSURE_1_AFTER_SENSOR	Corrected press.	All
4	MEASURED_TEMPERATURE_1	Sensor temp.	All
8	MEASURED_LEVEL_AFTER_ SIMULATION	Level before lin.	Only level
9	MEASURED_TANK_CONTENT_AFTER_ SIMULATION	Tank content	Only level
10	CORRECTED_MEASUREMENT_ DENSITY	Process density	Only level
12	HART_INPUT_VALUE	HART input val.	Cannot be selected as output
251	None (no device variable is mapped)	-	All (but only for quaternary variable)

The device variables can be queried from a HART® master using HART® command 9 or 33.

9 Commissioning

NOTICE

If a pressure smaller than the minimum permitted pressure or greater than the maximum permitted pressure is present at the device, the following messages are output in succession:

- "S140 Working range P" or "F140 Working range P" (depending on the setting in the "Alarm behav. P" parameter)
- "S841 Sensor range" or "F841 Sensor range" (depending on the setting in the "Alarm behav. P" parameter)
- "S971 Adjustment" (depending on setting in "Alarm behav. P" parameter

9.1 Post-installation check and function check

Before commissioning your measuring point, ensure that the post-installation and post-connection check have been performed.

- "Post-installation check" checklist → 🖹 21
- "Post-connection check" checklist → 🖹 31

9.2 Unlocking/locking configuration

If the device is locked to prevent configuration, it must first be unlocked.

9.2.1 Locking/unlocking software

If the device is locked via the software (device access code), the key symbol appears in the measured value display. If an attempt is made to write to a parameter, a prompt for the device access code appears. To unlock, enter the user-defined device access code.

9.3 Commissioning

Commissioning comprises the following steps:

- Function check → 🖹 38
- Selecting the language, measuring mode and pressure unit → 🖹 39
- Position adjustment → 🖹 40
- Configuring measurement:
  - Pressure measurement → 🖹 41
  - Level measurement → 🖹 43

9.4 Selecting the language

9.4.1 Configure language

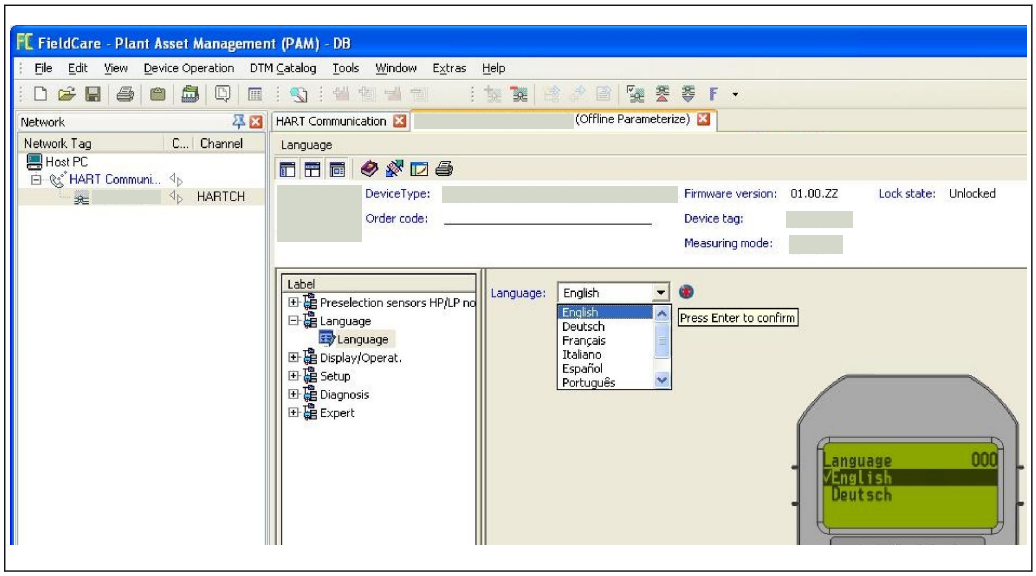

A0017654-EN

9.5 Measuring mode selection

The device is configured for the "Pressure" measuring mode as standard. The measuring range and the unit in which the measured value is transmitted correspond to the data on the nameplate.

WARNING

Changing the measuring mode affects the span (URV)

This situation can result in product overflow.

- If the measuring mode is changed, the setting for the span (URV) must be checked in the "Setup" operating menu and readjusted if necessary.

Measuring mode

Navigation	Setup → Measuring mode
Write permission	Operators/Service engineers/Expert
Description	Select the measuring mode. The operating menu is structured differently depending on the measuring mode selected.
Options	▪ Meas. ▪ Level
Factory setting	Level

9.6 For selecting the pressure engineering unit

Press. eng. unit

Navigation Setup → Press. eng. unit

Write permission Operators/Service engineers/Expert

Description Select the pressure engineering unit. If a new pressure engineering unit is selected, all pressure-specific parameters are converted and displayed with the new unit.

Options
- mbar, bar
- mmH2O, mH2O, inH2O
- ftH2O
- Pa, kPa, MPa
- psi
- mmHg, inHg
- kgf/cm^2

Factory setting mbar or bar depending on the nominal measuring range of the sensor module, or as per order specifications

9.7 Position adjustment

The pressure resulting from the orientation of the device can be corrected here.

Pos. zero adjust (relative pressure sensor)

Navigation Setup → Pos. zero adjust

Write permission Operators/Service engineers/Expert

Description Position adjustment – the pressure difference between zero (set point) and the measured pressure need not be known.

Options
- Confirm
- Cancel

Example
- Measured value = 2.2 mbar (0.033 psi)
- You correct the measured value via the "Pos. zero adjust" parameter with the "Confirm" option. i.e. This means that you are assigning the value 0.0 to the pressure present.
- Measured value (after pos. zero adjust) = 0.0 mbar
- The current value is also corrected.

Factory setting Cancel

Calib. offset (absolute pressure sensor)

Navigation Setup → Calib. offset

Write permission Operators/Service engineers/Expert

Description Position adjustment – the pressure difference between zero (set point) and the measured pressure must be known.

Options
- Confirm
- Cancel

Example
- Measured value = 982.2 mbar (15 psi)
- You correct the measured value via the "Calib. offset" parameter with the "Confirm" option. i.e. This means that you are assigning the value 980.0 to the pressure present.
- Measured value (after position adjustment) = 980 mbar (15 psi)
- The current value is also corrected.

Factory setting Cancel

9.8 Configuring the damping

The pressure resulting from the orientation of the device can be corrected here.

Damping

Navigation Setup → Damping

Write permission Operators/Service engineers/Expert
(if the "Damping" DIP switch is set to "on")

Description Enter damping time (time constant τ) ("Damping" DIP switch set to "on")
Display damping time (time constant τ) ("Damping" DIP switch set to "off").
The damping affects the speed at which the measured value reacts to changes in pressure.

Input range 0.0 to 999.0 s

Factory setting 2.0 sec. or according to order specifications

9.9 Configuring pressure measurement

9.9.1 Calibration with reference pressure (wet calibration)

Example:

In this example, a device with a 400 mbar (6 psi) sensor module is configured for the 0 to +300 mbar (0 to 4.5 psi) measuring range i.e. 0 mbar is assigned to the 4 mA value and 300 mbar (4.5 psi) is assigned to the 20 mA value.

Prerequisite:

The pressure values 0 mbar and 300 mbar (4.5 psi) can be specified. For example, the device is already installed.

Due to the orientation of the device, there may be pressure shifts in the measured value, i.e. the measured value is not zero in a pressureless condition. For information on how to perform a position adjustment, see → 40.

	Description	
1	Select the "Pressure" measuring mode via the "Measuring Mode" parameter. Menu path: Setup → Measuring mode **WARNING** **Changing the measuring mode affects the span (URV)** This situation can result in product overflow. ▶ If the measuring mode is changed, the setting for the span (URV) must be checked in the "Setup" operating menu and readjusted if necessary.	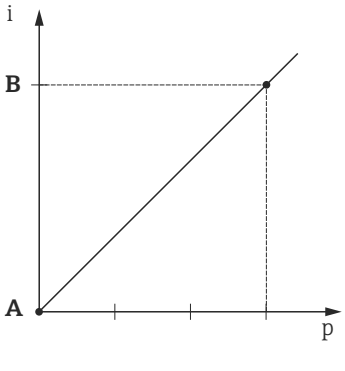 A0017671 *A* *See table, step 3.* *B* *See table, step 4.* *i* *Current value* *p* *Meas.*
2	Select a pressure unit via the "Press. eng. unit" parameter, here "mbar" for example. Menu path: Setup → Press. eng. unit	
3	The pressure for the LRV (4 mA value) is present at the device, 0 mbar for example.	
	Select the "Get LRV" parameter. Menu path: Setup → Extended setup → Current output → Get LRV	
	Confirm the present value by selecting "Apply". The present pressure value is assigned to the lower current value (4 mA).	
4	The pressure for the URV (20 mA value) is present at the device, 300 mbar (4.5 psi).	
	Select the "Get URV" parameter. Menu path: Setup → Extended setup → Current output → Get URV	
	Confirm the present value by selecting "Apply". The present pressure value is assigned to the upper current value (20 mA).	
5	Result: The measuring range is configured for 0 to +300 mbar (0 to 4.5 psi).	

9.9.2 Calibration without reference pressure (dry calibration)

Example:

In this example, a device with a 400 mbar (6 psi) sensor module is configured for the 0 to +300 mbar (0 to 4.5 psi) measuring range, i.e. 0 mbar is assigned to the 4 mA value and 300 mbar (4.5 psi) is assigned to the 20 mA value.

Prerequisite:

This is a theoretical calibration, i.e. the pressure values for the lower and upper range are known.

Due to the orientation of the device, there may be pressure shifts in the measured value, i.e. the measured value is not zero in a pressureless condition. For information on how to perform a position adjustment, see → 40.

	Description	
1	Select the "Pressure" measuring mode via the "Measuring Mode" parameter. Menu path: Setup → Measuring mode **⚠ WARNING** **Changing the measuring mode affects the span (URV)** This situation can result in product overflow. ▶ If the measuring mode is changed, the setting for the span (URV) must be checked in the "Setup" operating menu and readjusted if necessary.	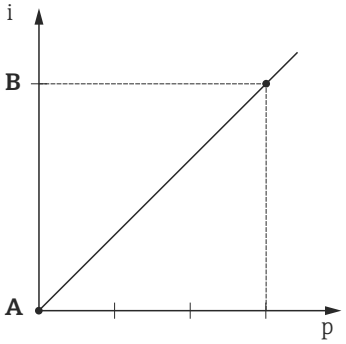 A0017671 *A* *See table, step 3.* *B* *See table, step 4.* *i* *Current value* *p* *Meas.*
2	Select a pressure unit via the "Press. eng. unit" parameter, here "mbar" for example. Menu path: Setup → Press. eng. unit	
3	Select the "Set LRV" parameter. Menu path: Setup → Extended setup → Current output → Set LRV	
	Enter the value for the "Set LRV" parameter (here 0 mbar) and confirm. This pressure value is assigned to the lower current value (4 mA).	
4	Select the "Set URV" parameter. Menu path: Setup → Extended setup → Current output → Set URV	
	Enter the value for the "Set URV" parameter, here 300 mbar (4.5 psi), and confirm. This pressure value is assigned to the upper current value (20 mA).	
5	Result: The measuring range is configured for 0 to +300 mbar (0 to 4.5 psi).	

9.10 Configuring level measurement

9.10.1 Information on level measurement

You have a choice of two methods for calculating the level: "In pressure" and "In height". The table in the "Overview of level measurement" section that follows provides you with an overview of these two measuring tasks.

- The limit values are not checked, i.e. the values entered must be appropriate for the sensor module and the measuring task for the device to be able to measure correctly.
- Customer-specific units are not possible.
- The values entered for "Empty calib./Full calib.", "Empty pressure/Full pressure", "Empty height/Full height" and "Set LRV/Set URV" must be at least 1% apart. The value will be rejected, and a warning message displayed, if the values are too close together.

9.10.2 Overview of level measurement

Measuring task	Level selection	Measured variable options	Description	Measured value display
Calibration is performed by entering two pressure-level value pairs.	"In pressure"	Via the "Output unit" parameter : %, level, volume or mass units	▪ Calibration with reference pressure (wet calibration) → 🖹 46 ▪ Calibration without reference pressure (dry calibration) → 🖹 44	The measured value display and the "Level before lin" parameter display the measured value.
Calibration is performed by entering the density and two height-level value pairs.	"In height"		▪ Calibration with reference pressure (wet calibration) → 🖹 51 ▪ Calibration without reference pressure (dry calibration) → 🖹 48	

9.10.3 "In pressure" level selection Calibration without reference pressure (dry calibration)

Example:

In this example, the volume in a tank should be measured in liters. The maximum volume of 1 000 l (264 gal) corresponds to a pressure of 400 mbar (6 psi).

The minimum volume of 0 liters corresponds to a pressure of 0 mbar since the process isolating diaphragm of the probe is at the start of the level measuring range.

Prerequisite:

- The measured variable is in direct proportion to the pressure.
- This is a theoretical calibration i.e. the pressure and volume values for the lower and upper calibration point must be known.

- The values entered for "Empty calib./Full calib.", "Empty pressure/Full pressure" and "Set LRV/Set URV" must be at least 1% apart. The value will be rejected, and a warning message displayed, if the values are too close together. Further limit values are not checked, i.e. the values entered must be appropriate for the sensor module and the measuring task for the device to be able to measure correctly.
- Due to the orientation of the device, there may be pressure shifts in the measured value, i.e. when the vessel is empty or partly filled, the measured value is not zero. For information on how to perform a position adjustment, see → 🖹 40.

	Description	
1	Select the "Level" measuring mode via the "Measuring mode" parameter. Menu path: Setup → Measuring mode **⚠ WARNING** **Changing the measuring mode affects the span (URV)** This situation can result in product overflow. ▶ If the measuring mode is changed, the setting for the span (URV) must be checked in the "Setup" operating menu and readjusted if necessary.	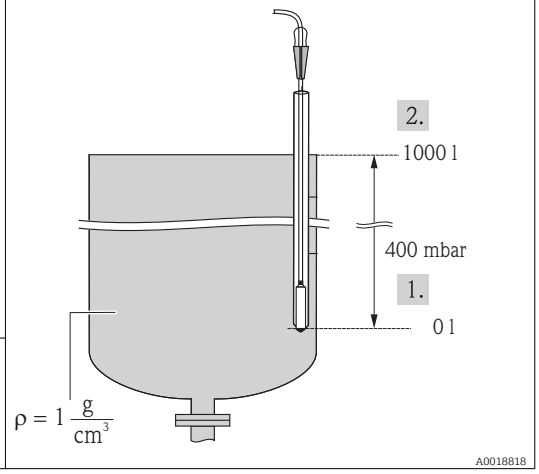
2	Select a pressure unit via the "Press. eng. unit" parameter, here "mbar" for example. Menu path: Setup → Press. eng. unit	

	Description	
3	Select the "In pressure" level mode via the "Level selection" parameter. Menu path: Setup → Extended setup → Level → Level selection.	*1 See table, steps 6 and 7.* *2 See table, steps 8 and 9.*
4	Select a volume unit via the "Unit before lin." parameter, here "l" (liter) for example. Menu path: Setup → Extended setup → Level→ Unit before lin.	
5	Select the "Dry" option via the "Calibration mode" parameter. Menu path: Setup → Extended setup → Level → Calibration mode	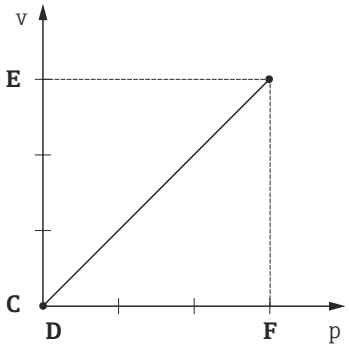
6	Enter the volume value for the lower calibration point via the "Empty calib." parameter, here 0 liters for example. Menu path: Setup → Extended setup → Level → Empty calib.	
7	Enter the pressure value for the lower calibration point via the "Empty pressure" parameter, here "0 mbar" for example. Menu path: Setup → Extended setup → Level → Empty pressure	
8	Enter the volume value for the upper calibration point via the "Full calib." parameter, here 1 000 l (264 gal). Menu path: Setup → Extended setup → Level → Full calib.	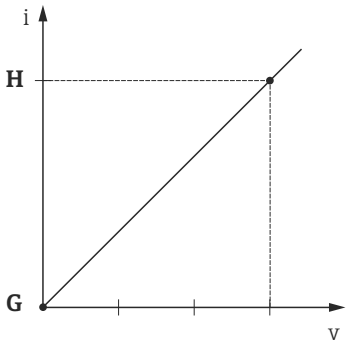
9	Enter the pressure value for the upper calibration point via the "Full pressure" parameter, here 400 mbar (6 psi). Menu path: Setup → Extended setup → Level → Full pressure	A0017662
10	"Adjust density" contains the factory setting 1.0 but can be changed if required. The value pairs subsequently entered must correspond to this density. Menu path: Setup → Extended setup → Level → Adjust density	*C See table, step 6.* *D See table, step 7.* *E See table, step 8.* *F See table, step 9.* *G See table, step 11* *H See table, step 12* *i Current value* *p Meas.* *v Volume*
11	Set the volume value for the lower current value (4 mA) via the "Set LRV" parameter (0 l). Menu path: Setup → Extended setup → Current output → Set LRV	
12	Set the volume value for the upper current value (20 mA) via the "Set URV" parameter (1 000 l (264 gal)). Menu path: Setup → Extended setup → Current output → Set URV	
13	If the process uses a medium other than that on which the calibration was based, the new density must be specified in the "Process density" parameter. Menu path: Setup → Extended setup → Current output → Process density.	

	Description	
14	If density correction is required, assign the temperature probe in the "Auto dens. corr." parameter. A density correction is only possible for water. A temperature-density curve that is saved in the device is used. For this reason, the "Adjust density" (step 10) and "Process density" (step 13) parameters are not used here. Menu path: Expert → Application → Level → Auto dens. corr.	
15	Result: The measuring range is configured for 0 to 1000 l (0 to 264 gal).	

For this level mode, the measured variables %, level, volume and mass are available, see "Unit before lin." .

9.10.4 "In pressure" level selection Calibration with reference pressure (wet calibration)

Example:

In this example, the level in a tank should be measured in "m". The maximum level is 3 m (9.8 ft).

The pressure range is derived from the level and the density of the medium. In this situation, the device sets the pressure range to 0 to +300 mbar (0 to 4.5 psi).

Prerequisite:

- The measured variable is in direct proportion to the pressure.
- The tank can be filled and emptied.

The values entered for "Empty calib./Full calib." and" Set LRV/Set URV" and the pressures present must be at least 1% apart. The value will be rejected, and a warning message displayed, if the values are too close together. Other limit values are not checked, i.e. the values entered must be appropriate for the sensor and the measuring task for the device to be able to measure correctly.

	Description	
1	Perform a "position adjustment" → 📄 40.	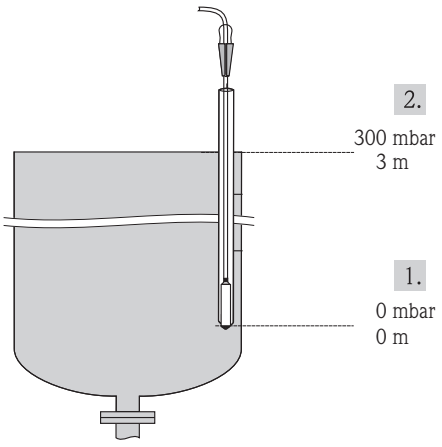 *1 See table, step 9.* *2 See table, step 10.*
2	Select the "Level" measuring mode via the "Measuring mode" parameter. Menu path: Setup → Measuring mode **⚠ WARNING** **Changing the measuring mode affects the span (URV)** This situation can result in product overflow. ► If the measuring mode is changed, the setting for the span (URV) must be checked in the "Setup" operating menu and readjusted if necessary.	
3	Select a pressure unit via the "Press. eng. unit" parameter, here "mbar" for example. Menu path: Setup → Press. eng. unit	
4	Select the "In pressure" level mode via the "Level selection" parameter. Menu path: Setup → Extended setup → Level → Level selection.	

	Description
5	If density correction is required, assign the temperature probe in the "Auto dens. corr." parameter. Menu path: Expertc → Application → Auto dens. corr. A density correction is only possible for water. A temperature-density curve that is saved in the device is used. For this reason, the "Adjust density" (step 8) and "Process density" (step 13) parameters are not used here.
6	Select a level unit via the "Output unit" parameter, "m" for example. Menu path: Setup → Extended setup → Level → Output unit
7	Select the "Wet" option via the "Calibration mode" parameter. Menu path: Setup → Extended setup → Level → Calibration mode
8	If the calibration is performed with a medium other than the process medium, enter the density of the calibration medium in the "Adjust density" parameter. Menu path: Setup → Extended setup → Level → Adjust density The process density can be changed only if automatic density correction is switched off (see step 5).
9	The hydrostatic pressure for the lower calibration point is present at the device, here "0 mbar" for example.
	Select the "Empty calib." parameter. Menu path: Setup → Extended setup → Level → Empty calib.
	Enter the level value, here 0 m for example. The pressure value present is assigned to the lower level value by confirming the value.
10	The hydrostatic pressure for the upper calibration point is present at the device, here 300 mbar (4.35 psi) for example.
	Select the "Full calib." parameter. Menu path: Setup → Extended setup → Level → Full calib.
	Enter the level value, 3 m (9.8 ft). The pressure value present is assigned to the upper level value by confirming the value.
11	Use the "Set LRV" parameter to set the level value for the lower current value (4 mA), here "0 m" for example. Menu path: Setup → Extended setup → Current output → Set LRV
12	Use the "Set URV" parameter to set the upper current value (20 mA) (3 m (9.8 ft)). Menu path: Setup → Extended setup → Current output → Set URV

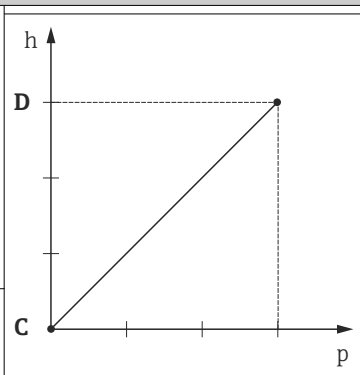

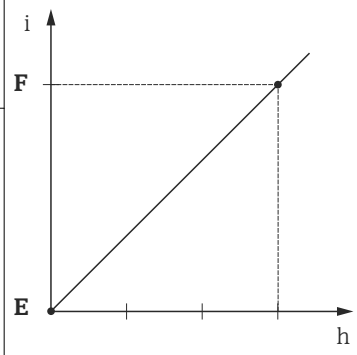

A0017658

C *See table, step 9.*
D *See table, step 10.*
E *See table, step 11.*
F *See table, step 12.*
h *Height*
i *Current value*
p *Meas.*

	Description	
12	If the process uses a medium other than that on which the calibration was based, the new density must be specified in the "Process density" parameter. Menu path: Setup → Extended setup → Level → Process density. ℹ The process density can be changed only if automatic density correction is switched off (see step 5).	
13	Result: The measuring range is configured for 0 to 3 m (0 to 9.8 ft).	

ℹ For this level mode, the measured variables %, level, volume and mass are available, see "Unit before lin." .

9.10.5 "In height" level selection Calibration without reference pressure (dry calibration)

Example:

In this example, the volume in a tank should be measured in liters. The maximum volume of 1 000 l (264 gal) corresponds to a level of 4 m (13 ft). The minimum volume of 0 liter corresponds to a level of 0 m since the process isolating diaphragm of the probe is at the start of the level measuring range.

Prerequisite:

- The measured variable is in direct proportion to the pressure.
- This is a theoretical calibration i.e. the height and volume values for the lower and upper calibration point must be known.

ℹ
- The values entered for "Empty calib./Full calib.", "Empty height/Full height" and" Set LRV/Set URV" must be at least 1% apart. The value will be rejected, and a warning message displayed, if the values are too close together. Other limit values are not checked, i.e. the values entered must be appropriate for the sensor and the measuring task for the device to be able to measure correctly.
- Due to the orientation of the device, there may be pressure shifts in the measured value, i.e. when the vessel is empty or partly filled, the measured value is not zero. For information on how to perform a position adjustment, see → 40.

	Description	
1	Select the "Level" measuring mode via the "Measuring mode" parameter. Menu path: Setup → Measuring mode **⚠ WARNING** **Changing the measuring mode affects the span (URV)** This situation can result in product overflow. ► If the measuring mode is changed, the setting for the span (URV) must be checked in the "Setup" operating menu and readjusted if necessary.	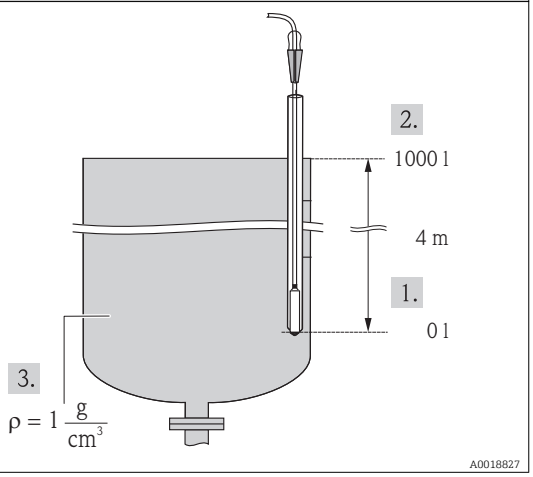
2	Select a pressure unit via the "Press. eng. unit" parameter, here "mbar" for example. Menu path: Setup → Press. eng. unit	

	Description	
3	Select the "In height" level mode via the "Level selection" parameter. Menu path: Setup → Extended setup → Level → Level selection.	*1 See table, steps 10 and 11.* *2 See table, steps 13 and 14.* *3 See table, step 12*
4	If density correction is required, assign the temperature probe in the "Auto dens. corr." parameter. Menu path: Setup → Extended setup → Level → Level selection.	
4	Select a volume unit via the "Unit before lin." parameter, here "l" (liter) for example. Menu path: Setup → Extended setup → Level→ Unit before lin. A density correction is only possible for water. A temperature-density curve that is saved in the device is used. For this reason, the "Adjust density" (step 12) and "Process density" (step 15) parameters are not used here.	
5	Select a volume unit via the "Output unit" parameter, here here "l" (liter) for example. Menu path: Setup → Extended setup → Level → Output unit	
6	Select a level unit via the "Height unit" parameter, "m" for example. Menu path: Setup → Extended setup → Level → Height unit	

	Description
7	Select the "Dry" option via the "Calibration mode" parameter. Menu path: Setup → Extended setup → Level → Calibration mode
8	Enter the volume value for the lower calibration point via the "Empty calib." parameter, here 0 liters for example. Menu path: Setup → Extended setup → Level → Empty calib.
9	Enter the height value for the lower calibration point via the "Empty height" parameter, here 0 m for example. Menu path: Setup → Extended setup → Level → Empty height
10	Enter the volume value for the upper calibration point via the "Full calib." parameter, here 1 000 l (264 gal) for example. Menu path: Setup → Extended setup → Level → Full calib.
11	Enter the height value for the upper calibration point via the "Full height" parameter, here 4 m (13 ft) for example. Menu path: Setup → Extended setup → Level → Full height
12	Enter the density of the medium via the "Adjust density" parameter, here "1 g/cm³" (1 SGU) for example. Menu path: Setup → Extended setup → Level → Adjust density
13	Set the volume value for the lower current value (4 mA) via the "Set LRV" parameter (0 l). Menu path: Setup → Extended setup → Current output → Set LRV
14	Set the volume value for the upper current value (20 mA) via the "Set URV" parameter (1 000 l (264 gal)). Menu path: Setup → Extended setup → Current output → Set URV
15	If the process uses a medium other than that on which the calibration was based, the new density must be specified in the "Process density" parameter. Menu path: Setup → Extended setup → Current output → Process density. The process density can only be changed if automatic density correction is switched off (see Step 4).
16	Result: The measuring range is configured for 0 to 1 000 l (0 to 264 gal).

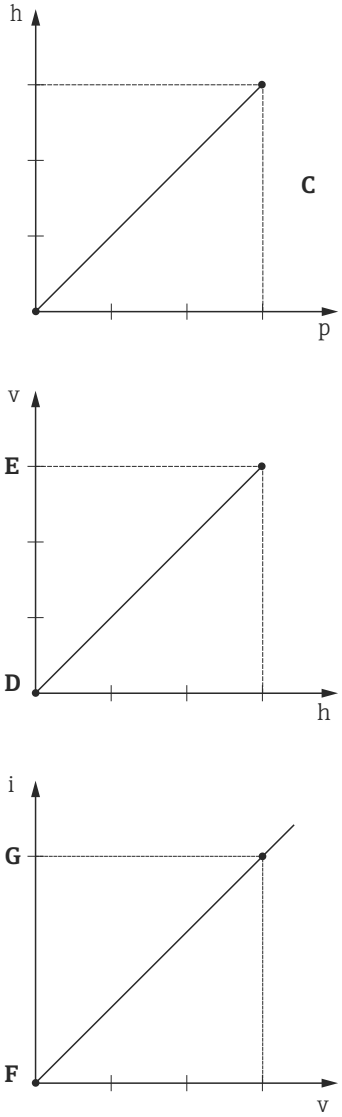

C See table, step 12.
D See table, step 8.
E See table, step 10.
F See table, step 13.
G See table, step 14.
h Height
i Current value
p Meas.
v Volume

For this level mode, the measured variables %, level, volume and mass are available, see "Unit before lin." .

9.10.6 "In height" level selection Calibration with reference pressure (wet calibration)

Example:

In this example, the volume in a tank should be measured in liters. The maximum volume of 1 000 l (264 gal) corresponds to a level of 4 m (13 ft).

The minimum volume of 0 liter corresponds to a level of 0 m since the process isolating diaphragm of the probe is at the start of the level measuring range. The density of the fluid is 1 g/cm³ (1 SGU).

Prerequisite:

- The measured variable is in direct proportion to the pressure.
- The tank can be filled and emptied.

The values entered for "Empty calib./Full calib." and" Set LRV/Set URV" and the pressures present must be at least 1% apart. The value will be rejected, and a warning message displayed, if the values are too close together. Other limit values are not checked, i.e. the values entered must be appropriate for the sensor and the measuring task for the device to be able to measure correctly.

	Description
1	Perform a "position adjustment" → 🖹 40.
2	Select the "Level" measuring mode via the "Measuring mode" parameter. Menu path: Setup → Measuring mode **⚠ WARNING** **Changing the measuring mode affects the span (URV)** This situation can result in product overflow. ▶ If the measuring mode is changed, the setting for the span (URV) must be checked in the "Setup" operating menu and readjusted if necessary.
3	Select the "In height" level mode via the "Level selection" parameter. Menu path: Setup → Extended setup → Level → Level selection.
4	If density correction is required, assign the temperature probe in the "Auto dens. corr." parameter. Menu path: Expertc → Application → Auto dens. corr. A density correction is only possible for water. A temperature-density curve that is saved in the device is used. For this reason, the "Adjust density" (step 11) and "Process density" (step 14) parameters are not used here.
5	Select a pressure unit via the "Press. eng. unit" parameter, here "mbar" for example. Menu path: Setup → Press. eng. unit

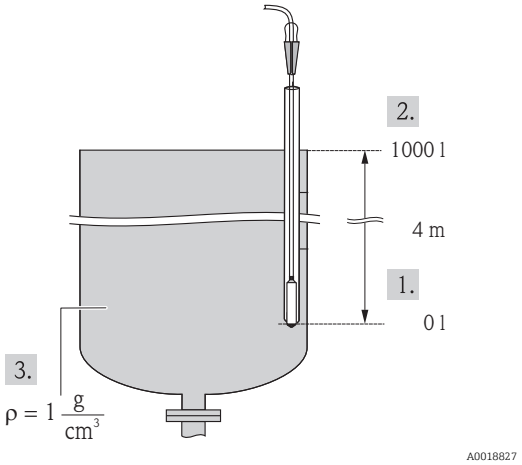

1 See table, step 9.
2 See table, step 10.
3 See table, step 11.

	Description
6	Select a volume unit via the "Output unit" parameter, here "l" (liter) for example. Menu path: Setup → Extended setup → Level → Output unit
7	Select a height unit via the "Height unit" parameter, here "m" for example. Menu path: Setup → Extended setup → Level → Height unit
8	Select the "Wet" option via the "Calibration mode" parameter. Menu path: Setup → Extended setup → Level → Calibration mode
9	The hydrostatic pressure for the lower calibration point is present at the device, here "0 mbar" for example.
	Enter the volume value for the lower calibration point via the "Empty calib." parameter, here "0 liter" for example. Menu path: Setup → Extended setup → Level → Empty calib.
10	The hydrostatic pressure for the upper calibration point is present at the device, here "400 mbar (6 psi)" for example.
	Enter the volume value for the upper calibration point via the "Full calib." parameter, here 1 000 l (264 gal) for example. Menu path: Setup → Extended setup → Level → Full calib.
11	If the calibration is performed with a medium other than the process medium, enter the density of the calibration medium in the "Adjust density" parameter, here 1 g/cm³ (1 SGU) for example. Menu path: Setup → Extended setup → Level → Adjust density The process density can only be changed if automatic density correction is switched off (see Step 4).
12	Set the volume value for the lower current value (4 mA) via the "Set LRV" parameter (0 l). Menu path: Setup → Extended setup → Current output → Set LRV
13	Set the volume value for the upper current value (20 mA) via the "Set URV" parameter(1 000 l (264 gal)). Menu path: Setup → Extended setup → Current output → Set URV
14	If the process uses a medium other than that on which the calibration was based, the new density must be specified in the "Process density" parameter. Menu path: Setup → Extended setup → Level → Process density. The process density can only be changed if automatic density correction is switched off (see Step 4).
15	Result: The measuring range is configured for 0 to 1 000 l (0 to 264 gal).

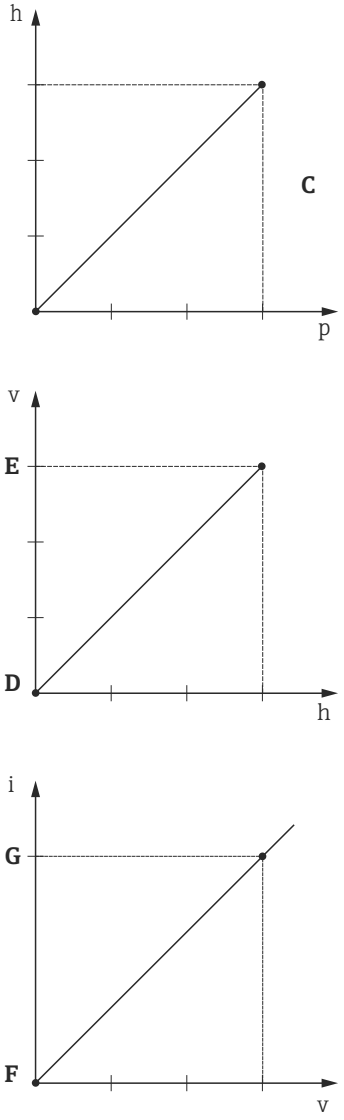

C See table, step 10.
D See table, step 8.
E See table, step 9.
F See table, step 11.
G See table, step 12.
h Height
i Current value
p Meas.
v Volume

The measured variables %, level, volume and mass are available for this level mode, see "Output unit".

9.10.7 Calibration with partially filled vessel (wet calibration)

Example:

This example explains a wet calibration for cases in which it is not possible to empty the vessel and then fill it to 100%.

During this wet calibration, a level of 20% is used as the calibration point for "Empty" and a level of "25%" is used as the calibration point for "Full".

The calibration is then extended to 0% to 100% and lower range-value (LRV)/upper range-value (URV) are adapted accordingly.

Prerequisite:

- The default value in level mode for the calibration mode is "Wet".
- This value can be adjusted: Menu path: Setup → Extended setup → Level → Calibration mode

	Description	
1	Select the "Level" measuring mode via the "Measuring mode" parameter. Menu path: Setup → Measuring mode **⚠ WARNING** **Changing the measuring mode affects the span (URV)** This situation can result in product overflow. ▶ If the measuring mode is changed, the setting for the span (URV) must be checked in the "Setup" operating menu and readjusted if necessary.	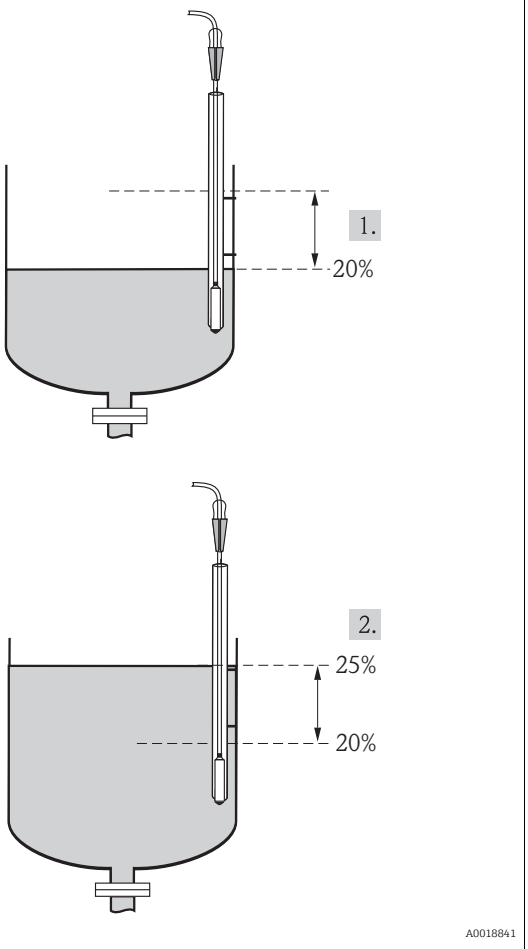
2	Set the value for "Empty calib." with the acting pressure for the level, e.g. 20 % Menu path: Setup → Extended setup → Level → Empty calib.	

1 See table, step 2
2 See table, step 3

	Description	
3	Set the value for "Full calib." with the acting pressure for the level, e.g. 25 %. Menu path: Setup → Extended setup → Level → Full calib.	
4	The values for the pressure when the vessel is full or empty are measured automatically during adjustment. The transmitter automatically sets the pressure values that are most suitable for "Empty calib." and "Full calib." as the minimum and maximum pressure which generates the output current. For this reason, the correct upper-range value (URV) and the correct lower-range value (LRV) must be set.	

If the process uses a medium other than that on which the calibration was based, the new density must be specified in the "Process density" parameter. In this case, you have to enter the various densities via the following menu path:
- Setup → Extended setup → Level → Adjust density (034) e.g. 1.0 kg/l for water)
- Setup → Extended setup → Level → Process density (035) e.g. 0.8 kg/l for oil)

9.10.8 Level measurement with absolute pressure probe and external pressure signal (electrical differential pressure)

Example:

In this example, a Waterpilot FMX21 and a Cerabar M device (each with an absolute pressure measuring cell) are connected via the common communication bus. The level can thus be measured in a deep well, with simultaneous compensation for the effect of atmospheric pressure.

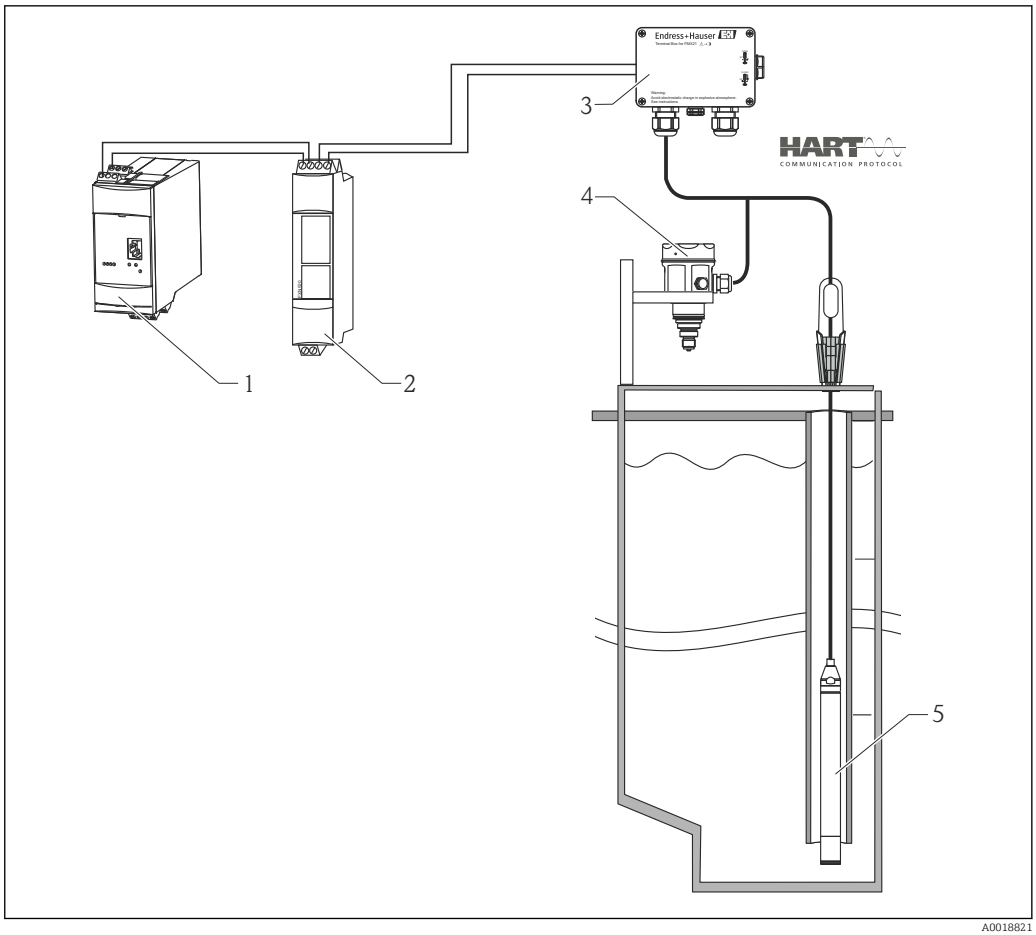

A0018821

1 *Fieldgate FXA520*
2 *Multidrop connector FXN520*
3 *Terminal box (can be ordered as an accessory)*
4 *Cerabar M absolute pressure (atmospheric pressure)*
5 *Waterpilot absolute pressure (level)*

	Adjustment of the level sensor (Waterpilot)
1	Select the "Level" measuring mode via the "Measuring mode" parameter. Menu path: Setup → Measuring mode **⚠ WARNING** **Changing the measuring mode affects the span (URV)** This situation can result in product overflow. ▶ If the measuring mode is changed, the setting for the span (URV) must be checked in the "Setup" operating menu and readjusted if necessary.
2	Select a pressure unit via the "Press. eng. unit" parameter, here "mbar" for example. Menu path: Setup → Press. eng. unit
3	The sensor is unpressurized, perform a position adjustment → 🖹 40
4	Switch on burst mode via the "Burst mode" parameter. Menu path: Expert → Communication → HART config
5	Set the output current to "Fixed" 4.0 mA via the "Current Mode" parameter. Menu path: Expert → Communication → HART config
6	Configure an address ≠0 using the "Bus address" parameter, e.g. bus address = 1. (HART 5.0 master: Range 0 to 15, where address = 0 calls up the "Signaling" setting; HART 6.0 master: Range 0 to 63) Menu path: Expert → Communication → HART config

	Adjustment of the level sensor (Waterpilot)
1	Select the "Level" measuring mode via the "Measuring mode" parameter. Menu path: Setup → Measuring mode **⚠ WARNING** **Changing the measuring mode affects the span (URV)** This situation can result in product overflow. ► If the measuring mode is changed, the setting for the span (URV) must be checked in the "Setup" operating menu and readjusted if necessary.
2	Select a pressure unit via the "Press. eng. unit" parameter, here "mbar" for example. Menu path: Setup → Press. eng. unit
3	The sensor is unpressurized, perform a position adjustment → 🖹 40
4	Set the output current to "Fixed" 4.0 mA via the "Current Mode" parameter. Menu path: Expert → Communication → HART config
5	Configure an address ≠0 using the "Bus address" parameter, e.g. bus address = 2. (HART 5.0 master: Range 0 to 15, where address = 0 calls up the "Signaling" setting; HART 6.0 master: Range 0 to 63) Menu path: Expert → Communication → HART config
6	Activate the reading of a value sent externally in burst mode via the "Electr. delta P" parameter. Menu path: Expert → Application
7	Perform level adjustment (wet or dry)
8	Result: The measured value output by the atmospheric pressure sensor equals the level in the deep well (differential signal) and can be read out by means of a HART request for the address of the atmospheric pressure sensor.

- It is not permissible to reverse the assignment of the measuring points to the direction of communication.
- The measured value of the transmitting device (via burst) must always be greater than the measured value of the receiving device (via "Electr. Delta P" mode).
- Adjustments that result in an offset of the pressure values (e.g. position adjustment, trim) must always be performed in accordance with the individual sensor and its orientation and independently of the "Electr. Delta P" application.
- Other settings result in non-permitted use of the "Electr. Delta P" mode and can lead to incorrect measured values.

9.11 Automatic density compensation

9.11.1 Automatic density compensation with the internally measured sensor temperature

Example:

In this example, a Waterpilot FMX21 is used for level measurement in water. The change in the water density caused by changing temperatures is automatically factored into the level signal by activating the automatic density compensation.

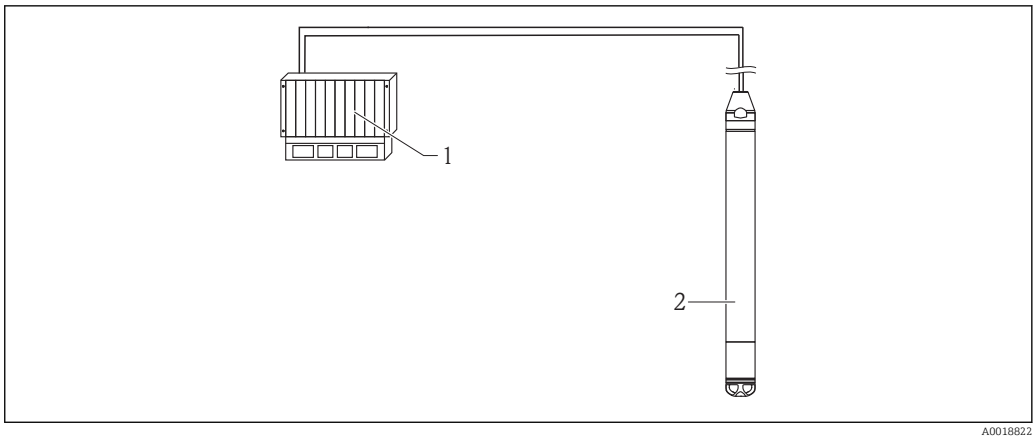

1 HART master, e.g. PLC (programmable logic controller)
2 Waterpilot FMX21

	Adjustment of the Waterpilot for level measurement
1	Select the "Level" measuring mode via the "Measuring mode" parameter. Menu path: Setup → Measuring mode **⚠ WARNING** **Changing the measuring mode affects the span (URV)** This situation can result in product overflow. ► If the measuring mode is changed, the setting for the span (URV) must be checked in the "Setup" operating menu and readjusted if necessary.
2	Select a pressure unit via the "Press. eng. unit" parameter, here "mbar" for example. Menu path: Setup → Press. eng. unit
3	The sensor is unpressurized, perform a position adjustment → 🖹 40
4	Set the "Auto dens. corr." parameter to Sensor temperature. Menu path: Expert → Application
5	Perform level adjustment (wet or dry)
6	Result: The measured value output by the Waterpilot corresponds to the level in the deep well corrected by means of the density characteristic line of the water.

9.11.2 Automatic density compensation using an integrated Pt100 for calculation in a suitable HART master (e.g. PLC)

Example:

In this example, the FMX21 with an integrated Pt100 is connected via the common communication bus to any temperature head transmitter with HART communication (e.g. TMT182). The temperature and pressure signal are transmitted to the HART master (e.g. PLC), where a corrected level value can be generated using a stored linearization table or density function (of a chosen medium). A pressure signal and a temperature signal can thus be generated with a chosen density function to compensate for a level.

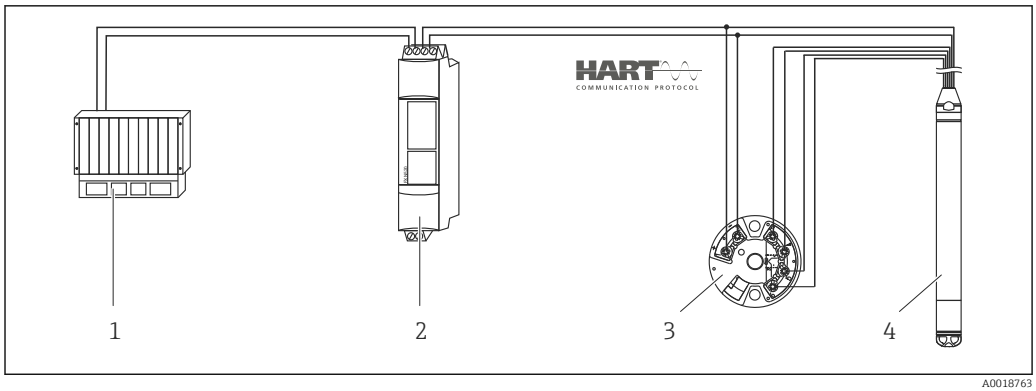

A0018763

1 HART master, PLC (programmable logic controller)
2 Multidrop connector FXN520
3 Temperature head transmitter TMT182
4 Waterpilot FMX21

	Adjustment of the Waterpilot for level measurement
1	Select the "Level" measuring mode via the "Measuring mode" parameter. Menu path: Setup → Measuring mode **⚠ WARNING** **Changing the measuring mode affects the span (URV)** This situation can result in product overflow. ► If the measuring mode is changed, the setting for the span (URV) must be checked in the "Setup" operating menu and readjusted if necessary.
2	Select a pressure unit via the "Press. eng. unit" parameter, here "mbar" for example. Menu path: Setup → Press. eng. unit
3	The sensor is unpressurized, perform a position adjustment → 🖹 40
4	Set the output current to "Fixed" 4.0 mA via the "Current Mode" parameter. Menu path: Expert → Communication → HART config
5	Perform level adjustment (wet or dry)
6	Configure an address ≠0 using the "Bus address" parameter, e.g. bus address = 1. (HART 5.0 master: Range 0 to 15, where address = 0 calls up the "Signaling" setting; HART 6.0 master: Range 0 to 63) Menu path: Expert → Communication → HART config ℹ The output current of the temperature head transmitter used must also be set to "Fixed" and have a HART address other than zero (e.g. address = 2).
7	Result: By calculating the pressure signal and temperature signal in a suitable HART master (e.g. PLC), a corrected level value can be determined for a chosen medium using a suitable density function.

9.11.3 Automatic density compensation using an external temperature signal for calculation in the FMX21

Example:

In this example, the FMX21 with an integrated Pt100 is connected to a HART-compliant temperature head transmitter via the common communication bus. In this case, the signal of the Pt100 is analyzed using a HART-compliant (min. HART 5.0) temperature head transmitter that supports burst mode. The change in the water density caused by changing temperatures is automatically factored into the level signal by activating the automatic density compensation.

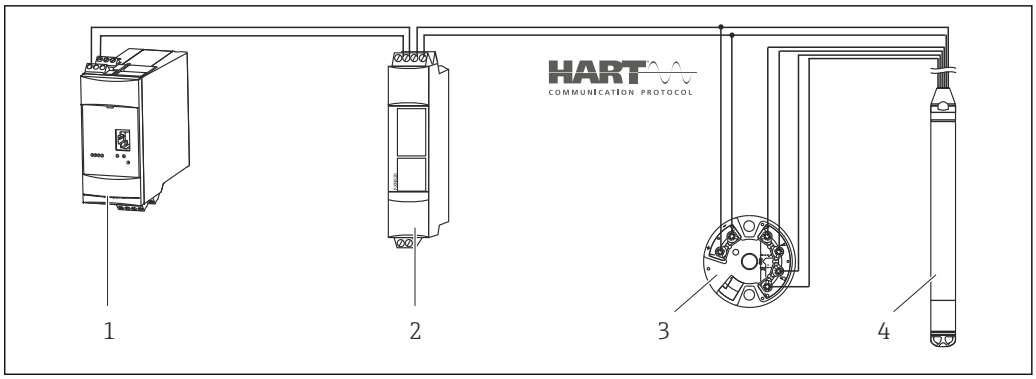

A0018764

1 *Fieldgate FXA520*
2 *Multidrop connector FXN520*
3 *Temperature head transmitter TMT182 (burst mode)*
4 *Waterpilot FMX21*

	Configuring the HART-compliant temperature head transmitter (min. HART 5.0) with burst function
	The output current of the temperature head transmitter used should be set to "Fixed" and must have a HART address other than zero (e.g. address = 1). The burst function must then be switched on with HART command 1. This step should be performed before the procedure described below in order to avoid a HART input error of the FMX21 being output during commissioning.
1	Select the "Level" measuring mode via the "Measuring mode" parameter. Menu path: Setup → Measuring mode **⚠ WARNING** **Changing the measuring mode affects the span (URV)** This situation can result in product overflow. ▶ If the measuring mode is changed, the setting for the span (URV) must be checked in the "Setup" operating menu and readjusted if necessary.
2	Select a pressure unit via the "Press. eng. unit" parameter, here "mbar" for example. Menu path: Setup → Press. eng. unit
3	The sensor is unpressurized, perform a position adjustment → 📄 40
4	Set the "Auto dens. corr." parameter to "External value". Menu path: Expert → Application
5	Perform level adjustment (wet or dry)
	Result: The measured value output by the Waterpilot equals the level in the deep well corrected by means of the density characteristic line of the water.

The TMT182 temperature head transmitter is not suitable for this configuration.

9.12 Linearization

9.12.1 Semi-automatic entry of a linearization table

Example:

In this example, the volume in a tank with a conical outlet should be measured in m^3.

Prerequisite:

- The tank can be filled or emptied. The linearization characteristic must rise or fall continuously.
- The "Level" measuring mode has been selected.
- A level calibration has been performed.
- For a description of the parameters mentioned, see the "Description of device parameters" section .

⚠ WARNING

Changing the measuring mode affects the span (URV)

This situation can result in product overflow.

► If the measuring mode is changed, the setting for the span (URV) must be checked in the "Setup" operating menu and readjusted if necessary.

	Description	
1	Select the "Semiautom. entry" option via the "Lin. mode" parameter. Menu path: Setup → Extended setup → Linearization → Lin. mode	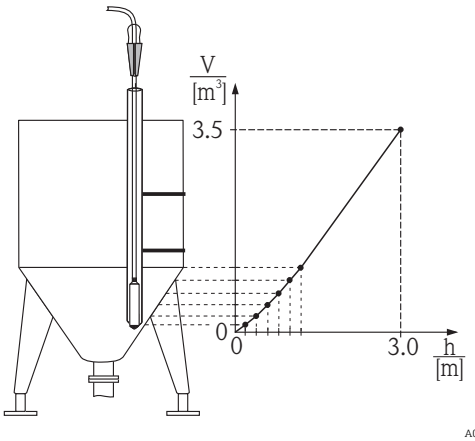 *h* *Height* *v* *Volume*
2	Select using the "Unit after lin." e.g. m^3. Menu path: Setup → Extended setup → Linearization → Unit after lin.	
3	Fill the tank to the height of the 1st point.	
4	Enter the number of the point in the table using the "Line-numb" parameter e.g. 1. Menu path: Setup → Extended setup → Linearization → Line numb	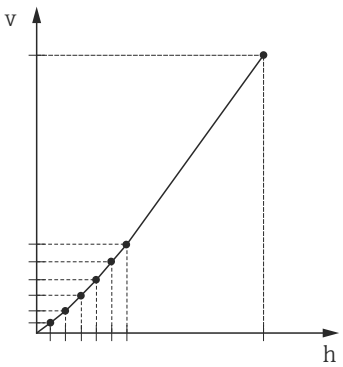
	The current level is displayed via the "X-value" parameter. Menu path: Setup → Extended setup → Linearization → X-val	
	Enter the associated volume value via the "Y-val" parameter, here 0 m^3 for example, and confirm value. Menu path: Setup → Extended setup → Linearization → Y-val	
5	To enter another point in the table, continue filling the tank and select the "Next point" option via the "Edit table" parameter. Enter the next point as explained in Step 4. Menu path: Setup → Extended setup → Linearization → Edit table	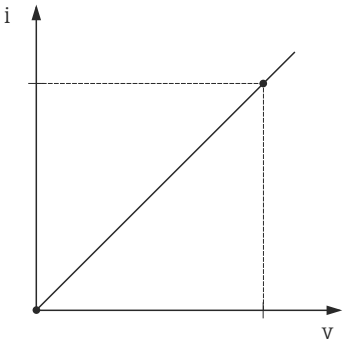

	Description	
6	Once all the points have been entered in the table, select the "Activate table" option via the "Lin. mode" parameter. Menu path: Setup → Extended setup → Linearization → Lin. mode	*h* *Height* *i* *Current value* *v* *Volume*
7	Result: Result: The measured value after linearization is displayed.	

- Error message F510 "Linearization" and alarm current as long as the table is being entered and until the table is activated.
- The lower-range value (= 4mA) is defined by the smallest point in the table. The upper-range value (= 20mA) is defined by the largest point in the table.
- Using the parameters "Set LRV" and "Set URV", you can change the allocation of the volume/mass values to the current values.

9.12.2 Manual entry of a linearization table

Example:

In this example, the volume in a tank with a conical outlet should be measured in m^3.

Prerequisite:

- This is a theoretical calibration, i.e. the points for the linearization table are known.
- The "Level" measuring mode has been selected.
- A level calibration has been performed.
- The linearization characteristic must rise or fall continuously.
- For a description of the parameters mentioned, see the "Description of device parameters" section .

WARNING

Changing the measuring mode affects the span (URV)

This situation can result in product overflow.

▶ If the measuring mode is changed, the setting for the span (URV) must be checked in the "Setup" operating menu and readjusted if necessary.

	Description	
1	Select the "Manual entry" option via the "Lin. mode" parameter. Menu path: Setup → Extended setup → Linearization → Lin. mode	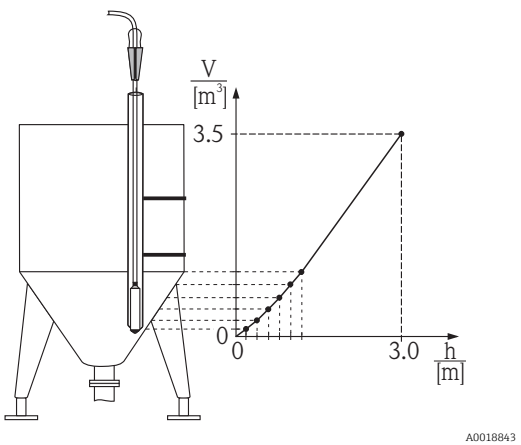 *h* *Height* *v* *Volume*
2	Select using the "Unit after lin." e.g. m^3. Menu path: Setup → Extended setup → Linearization → Unit after lin.	

	Description	
3	Enter the number of the point in the table using the "Line-numb" parameter e.g. 1. Menu path: Setup → Extended setup → Linearization → Line numb	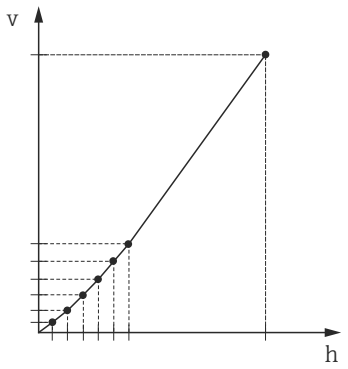
	The level is entered via the "X-val" parameter, here 0 m for example. Confirm your entry. Menu path: Setup → Extended setup → Linearization → X-val	
	Enter the associated volume value via the "Y-val" parameter, here 0 m^3 for example, and confirm value. Menu path: Setup → Extended setup → Linearization → Y-val	
4	To enter another point in the table, select the "Next point" option via the "Edit table" parameter. Enter the next point as explained in Step 3. Menu path: Setup → Extended setup → Linearization → Edit table	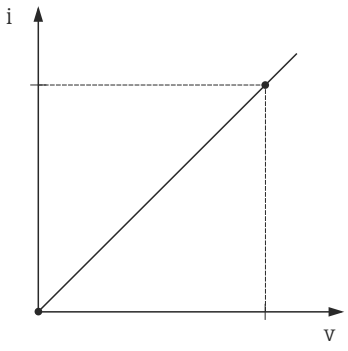
5	Once all the points have been entered in the table, select the "Activate table" option via the "Lin. mode" parameter. Menu path: Setup → Extended setup → Linearization → Lin. mode	A0017670
6	Result: Result: The measured value after linearization is displayed.	*h* *Height* *i* *Current value* *v* *Volume*

- Error message F510 "Linearization" and alarm current as long as the table is being entered and until the table is activated.
- Error message F511/F512 "Linearization" and alarm current as long as the linearization table consists of fewer than 2 points.
- The lower-range value (= 4mA) is defined by the smallest point in the table. The upper-range value (= 20mA) is defined by the largest point in the table.
- Using the parameters "Set LRV" and "Set URV", you can change the allocation of the volume/mass values to the current values.

9.13 Manual entry of a linearization table via operating tool

The following options are available to you with an operating tool that is based on FDT technology (e.g. FieldCare), you can enter linearization using a module specially designed for this purpose. This provides you with an overview of the selected linearization, even during entry. In addition, it is possible to configure different tank shapes in FieldCare ("Device operation" → "Device functions" → "Additional functions" → "Linearization table" menu).

The linearization table may also be entered manually point by point in the operating tool menu (see section).

9.14 Backing up or duplicating the device data

The following options are available to you with an operating tool that is based on FDT technology (e.g. FieldCare):
- Storage/recovery of configuration data.
- Duplication of device parameters.
- Transfer of all relevant parameters when replacing electronic inserts.

Use the following parameter for this:

Download select. (visible only in FieldCare)

Navigation Expert → System → Management → Download select.

Write permission Operators/Service engineers/Expert

Description Selection of data packages for up/download function in Fieldcare and PDM.

Prerequisite DIP switch set to "SW" and "Damping" set to "on". If you download using the factory setting "Configuration copy", all parameters required for a measurement will be downloaded. The functionality of the "Electronics replace" setting is reserved for Endress+Hauser Service and can be accessed only if the correct device access code is entered.

Options
- Configuration copy: This option overwrites general configuration parameters with the exception of the serial number, order number, calibration, pos. zero adjust, application and day information.
- Device replacement: This option overwrites general configuration parameters with the exception of the serial number, order number, calibration and position adjustment.
- Electronics replace: This option overwrites general configuration parameters.

Factory setting Configuration copy

10 Diagnostics and troubleshooting

10.1 Troubleshooting

General errors

Error	Possible cause	Solution
Device is not responding.	Supply voltage does not match the specification on the nameplate.	Apply correct voltage.
	Supply voltage has incorrect polarity.	Reverse polarity of supply voltage.
	Connecting cables are not in contact with the terminals.	Check the connection of the cables and correct if necessary.
Output current < 3.6 mA	Signal line is not wired correctly. Electronics unit is defective.	Check wiring.
Device measures incorrectly.	Configuration error	Check and correct parameter configuration (see below).
HART communication is not working.	Communication resistor missing or incorrectly installed.	Install the communication resistor (250 Ω) correctly.
	Commubox is not properly connected.	Connect Commubox correctly .
	Commubox is not set to "HART".	Set Commubox selector switch to "HART".

10.2 Diagnostic events

10.2.1 Diagnostic message

Faults detected by the self-monitoring system of the measuring device are displayed as a diagnostic message in alternation with the measured value display.

Status signals

The table → 📄 65 lists the messages that may occur. The ALARM STATUS parameter shows the message with the highest priority. The device has four different status information codes according to NE107:

F A0013956	**"Failure"** A device error has occurred. The measured value is no longer valid.
M A0013957	**"Maintenance required"** Maintenance is required. The measured value remains valid.
C A0013959	**"Function check"** The device is in service mode (e.g. during a simulation).
S A0013958	**"Out of specification"** The device is being operated: ▪ Outside its technical specifications (e.g. during warm-up or cleaning). ▪ Outside the parameter configuration undertaken by the user (e.g. level outside of configured span)

Diagnostic event and event text

The fault can be identified by means of the diagnostic event.

The event text helps you by providing information on the fault.

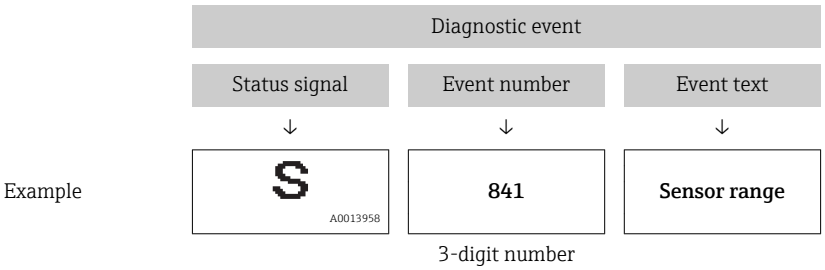

If two or more diagnostic events are pending simultaneously, only the diagnostic message with the highest priority is shown.

Other diagnostic messages that are pending can be viewed in the **Diagnostic list** submenu .

Past diagnostic messages that are no longer pending are shown in the **Event logbook** submenu .

10.2.2 List of diagnostic events

General messages

Diagnostic event		Reason	Corrective measure
Code	Description		
0	No error	-	-

"F" messages

Diagnostic event		Reason	Corrective measure
Code	Description		
F002	Sensor unknown	Sensor does not suit the device (electronic sensor nameplate).	Contact Endress+Hauser Service
F062	Sensor conn.	▪ Faulty sensor. ▪ Electromagnetic effects are greater than specifications in the technical data. This message appears for a short time only.	▪ Check the sensor module cable ▪ Contact Endress+Hauser Service
F081	Initialization	▪ Faulty sensor. ▪ Electromagnetic effects are greater than specifications in the technical data. This message appears for a short time only.	▪ Check sensor cable ▪ Contact Endress+Hauser Service
F083	Memory content	▪ Faulty sensor. ▪ Electromagnetic effects outside the permitted range. This message appears for a short time only.	▪ Restart the device ▪ Contact Endress+Hauser Service
F140	Working range P	▪ Overpressure and low pressure present. ▪ Electromagnetic effects outside the permitted range. ▪ Faulty sensor.	▪ Check the process pressure ▪ Check sensor range
F261	Electronic module	▪ Main electronics defective. ▪ Fault in the main electronics.	Restart the device
F282	Memory	▪ Fault in the main electronics. ▪ Main electronics defective.	Restart the device

Diagnostic event		Reason	Corrective measure
Code	Description		
F283	Memory content	▪ Main electronics defective. ▪ Electromagnetic effects are greater than specifications in the technical data. ▪ The supply voltage is disconnected when writing. ▪ An error occurred when writing.	Perform a reset
F411	Up-/download	▪ File is defective. ▪ During the download, the data are not correctly transmitted to the processor, e.g. because of open cable connections, spikes (ripple) on the supply voltage or electromagnetic effects.	▪ Repeat download ▪ Use other file ▪ Perform a reset
F510	Linearization	The linearization table is being edited.	▪ Conclude entries ▪ Select "linear"
F511	Linearization	The linearization table consists of less than 2 points.	▪ Table too small ▪ Correct table ▪ Activate table
F512	Linearization	The linearization table is not monotonic increasing or decreasing.	▪ Table not monotonic ▪ Correct table ▪ Activate table
F841	Sensor range	▪ Overpressure or low pressure present. ▪ Faulty sensor.	▪ Check the pressure value ▪ Contact Endress+Hauser Service
F882	Input signal	External measured value is not received or displays a failure status.	▪ Check the bus ▪ Check source device ▪ Check the setting

"M" messages

Diagnostic event		Reason	Corrective measure
Code	Description		
M002	Sens. unknown	Sensor does not suit the device (electronic sensor nameplate). Device continues measuring.	Contact Endress+Hauser Service
M283	Memory content	▪ Cause as indicated for F283. ▪ Correct measurement can continue as long as you do not need the peakhold indicator function.	Perform a reset
M431	Adjustment	The calibration carried out would result in values that exceed or fall below the nominal range of the sensor.	▪ Check the measuring range ▪ Check position adjustment ▪ Check the setting
M434	Scaling	▪ Values for calibration (e.g. lower-range value and upper-range value) are too close together. ▪ Lower-range value and/or upper-range value exceed or fall below the range limits of the sensor. ▪ The sensor was replaced and the customer-specific configuration does not suit the sensor module. ▪ Unsuitable download carried out.	▪ Check the measuring range ▪ Check the setting ▪ Contact Endress+Hauser Service
M438	Data set	▪ The supply voltage is disconnected when writing. ▪ An error occurred when writing.	▪ Check the setting ▪ Restart the device
M882	Input signal	External measured value displays a warning status.	▪ Check the bus ▪ Check the source device ▪ Check the setting

"C" messages

Diagnostic event		Reason	Corrective measure
Code	Description		
C412	Backup in prog.	Downloading.	Wait for download to complete.
C482	Simul. output	Simulation of the current output is switched on, i.e. the device is not measuring at present.	End the simulation
C484	Error simul.	Simulation of an error status is switched on, i.e. the device is not measuring at present.	End the simulation
C485	Measure simul.	Simulation is switched on, i.e. the device is not measuring at present.	End the simulation
C824	Process pressure	▪ Overpressure or low pressure present. ▪ Electromagnetic effects outside the permitted range. This message appears for a short time only.	▪ Check the pressure value ▪ Restart the device ▪ Perform a reset

"S" messages

Diagnostic event		Reason	Corrective measure
Code	Description		
S110	Operational range T	▪ High temperature or low temperature present. ▪ Electromagnetic effects outside the permitted range. ▪ Faulty sensor.	▪ Check process temperature ▪ Check the temperature range
S140	Working range P LP/HP	▪ Overpressure or low pressure present. ▪ Electromagnetic effects outside the permitted range. ▪ Faulty sensor.	▪ Check the process pressure ▪ Check sensor range
S822	Process temp. LP/HP	▪ The temperature measured in the sensor is higher than the upper nominal temperature of the sensor. ▪ The temperature measured in the sensor is lower than the lower nominal temperature of the sensor.	▪ Check temperature ▪ Check the setting
S841	Sensor range	▪ Overpressure or low pressure present. ▪ Faulty sensor.	▪ Check the pressure value ▪ Contact Endress+Hauser Service
S971	Adjustment	▪ The current is outside the permitted range from 3.8 to 20.5 mA. ▪ The present pressure value is outside the configured measuring range (but within the sensor module range, if applicable). ▪ The calibration carried out would result in values that exceed or fall below the nominal range of the sensor.	▪ Check the pressure value ▪ Check the measuring range ▪ Check the setting

10.3 Troubleshooting specific to Waterpilot FMX21 with optional Pt100

Error description	Reason	Corrective action
No measuring signal	4 to 20 mA cable not connected correctly	Connect device as per.
	No power supplied via the 4 to 20 mA cable	Check current loop.
	Supply voltage too low (at least 10.5 V DC)	▪ Check supply voltage. ▪ Overall resistance greater than max. load resistance

Error description	Reason	Corrective action
	Waterpilot defective	Replace the Waterpilot.
Temperature measured value is inaccurate/incorrect (only for Waterpilot FMX21 with Pt100)	Pt100 connected in 2-wire circuit, cable resistance was not compensated for	▪ Compensate the cable resistance. ▪ Connect Pt100 as 3-wire or 4-wire circuit.

10.4 Troubleshooting specific to TMT182 temperature head transmitter

Error description	Reason	Corrective action
No measuring signal	4 to 20 mA cable not connected correctly	Connect device as per.
	No power supplied via the 4 to 20 mA cable	Check current loop.
	Supply voltage too low (at least 10.5 V DC)	▪ Check supply voltage. ▪ Overall resistance greater than max. load resistance
Error current ≤ 3.6 mA or ≥ 21 mA	Pt100 not connected correctly	Connect device as per.
	4 to 20 mA cable not connected correctly	Connect device as per.
	Pt100 resistance thermometer defective	Replace the Waterpilot.
	Temperature head transmitter defective	Replace the temperature head transmitter.
Measured value is inaccurate/ incorrect	Pt100 connected in 2-wire circuit, cable resistance was not compensated for	▪ Compensate the cable resistance. ▪ Connect Pt100 as 3-wire or 4-wire circuit.

10.5 Response of output to errors

The behavior of the current output in case of fault is defined by the following parameters:

- "Alarm behav. P (050)"
- "Output fail mode (190)"
- "High alarm curr. (052)"

10.6 Firmware history

Date	Firmware version	Modifications	Documentation
05.2009	01.00.zz	Original firmware. Compatible with: ▪ FieldCare from version 2.02.00 ▪ Field Communicator DXR375 with Device Rev.: 1, DD Rev.: 1	BA00380P/00/EN/08.09

11 Maintenance

No special maintenance work is required.

Terminal box: Keep the pressure compensation tube and GORE-TEX® filter free from contamination.

11.1 Exterior cleaning

Please note the following points when cleaning the device:
- The cleaning agents used should not corrode the surface and the seals.
- Mechanical damage to the process isolating diaphragm, e.g. due to sharp objects, must be avoided.
- Only clean the terminal box with water or with a cloth dampened with very diluted ethanol.

12 Repairs

12.1 General notes

12.1.1 Repair concept

Repairs are not possible.

12.1.2 Replacing a device

Once a complete device has been replaced, the parameters can be transferred back into the device using FieldCare:

Prerequisite: The configuration of the old device was saved previously to the computer using FieldCare.

You can continue to measure without performing a new calibration.

12.2 Spare parts

- Some replaceable measuring device components are identified by means of a spare part nameplate. This contains information about the spare part.
- All the spare parts for the measuring device along with the order code are listed In the *W@M Device Viewer* (www.endress.com/deviceviewer) and can be ordered. If available, users can also download the associated Installation Instructions.

Measuring device serial number:
- Located on the device and spare part nameplate.
- Can be read out via the "Serial number" parameter in the "Instrument info" submenu.

12.3 Return

The measuring device must be returned in the event of a factory calibration, or if the wrong device has been ordered or delivered.

As an ISO-certified company and due to legal requirements,

Endress+Hauser is required to follow certain procedures when handling returned products that have been in contact with a medium. To ensure swift, safe and professional device returns, please read the return procedures and conditions on the Endress+Hauser website at www.services.endress.com/return-material

▶ Select country.
  ↳ The web site of the responsible sales office opens with all of the relevant information relating to returns.

1. If the desired country is not listed:
   Click on the "Choose your location" link.
   ↳ An overview of Endress+Hauser sales offices and representatives opens.
2. Contact your Endress+Hauser sales office or representative.

12.4 Disposal

When disposing, separate and recycle the device components based on the materials.

13 Overview of the operating menu

Depending on the parameter configuration, not all submenus and parameters are available. Information on this can be found in the parameter description under "Prerequisite".

Setup	Description
Mode	→ 83
Press. eng. unit	→ 85
Corrected press.	→ 87
Pos. zero adjust (relative pressure sensor)	→ 84
Calib. offset (absolute pressure sensor)	→ 84
Empty calib. ("Level" measuring mode and "Calibration mode" = wet)	→ 89
Full calib. ("Level" measuring mode and "Calibration mode" = wet")	→ 90
Set LRV ("Pressure" measuring mode)	→ 86
Set URV ("Pressure" measuring mode)	→ 86
Damping	→ 84
Level before Lin ("Level" measuring mode)	→ 92
Press after damping	→ 87

Setup →	Extended setup	Description
	Code definition	→ 80
	Device tag	→ 81
	Operator code	→ 80

Setup →	Extended setup →	Level ("Level" measuring mode)	Description
		Level selection	→ 88
		Output unit	→ 88
		Height unit	→ 88
		Calibration mode	→ 89
		Empty calib.	→ 89
		Empty pressure	→ 89
		Empty height	→ 90
		Full calib.	→ 90
		Full pressure	→ 90
		Full height	→ 91
		Adjust density	→ 91
		Process density	→ 92
		Level before lin	→ 92

Setup →	Extended setup →	Linearization	Description
		Lin. mode	→ 93
		Unit after lin.	→ 93
		Line-numb:	→ 93

Setup →	Extended setup →	Linearization	Description
		X-val	→ 94
		Y-val	→ 94
		Edit table	→ 94
		Tank description	→ 95
		Tank content	→ 95

Setup →	Extended setup →	Current output	Description
		Alarm behav. P	→ 98
		Output fail mode	→ 98
		Max. alarm curr.	→ 98
		Set min. current	→ 99
		Output current	→ 98
		Get LRV (only "Pressure")	→ 99
		Set LRV	→ 99
		Get URV (only "Pressure")	→ 99
		Set URV	→ 100

Diagnosis	Description
Diagnostic code	→ 112
Last diag. code	→ 112
Min. meas. press.	→ 112
Max. meas. press.	→ 112

Diagnosis →	Diagnostics List	Description
	Diagnostic 1	→ 114
	Diagnostic 2	→ 114
	Diagnostic 3	→ 114
	Diagnostics 4	→ 114
	Diagnostics 5	→ 114
	Diagnostics 6	→ 114
	Diagnostics 7	→ 114
	Diagnostics 8	→ 114
	Diagnostics 9	→ 114
	Diagnostics 10	→ 114

Diagnosis →	Event logbook	Description
	Last diag. 1	→ 115
	Last diag. 2	→ 115
	Last diag. 3	→ 115
	Last diag. 4	→ 115
	Last diag. 5	→ 115
	Last diag. 6	→ 115

Diagnosis →	Event logbook	Description
	Last diag. 7	→ 115
	Last diag. 8	→ 115
	Last diag. 9	→ 115
	Last diag. 10	→ 115

Diagnosis →	Instrument Info	Description
	Firmware Version	→ 81
	Serial number	→ 81
	Ext. order code	→ 81
	Order Identifier	→ 82
	Cust. tag number	→ 81
	Device tag	→ 81
	ENP version	→ 82
	Config. counter	→ 113
	LRL sensor	→ 96
	URL sensor	→ 96
	Manufacturer ID	→ 104
	Device type	→ 104
	Device revision	→ 104

Diagnosis →	Measured values	Description
	Level before lin	→ 92
	Tank content	→ 95
	Pressure measured	→ 86
	Sensor pressure	→ 86
	Corrected press.	→ 87
	Press after damping	→ 87
	Sensor temp.	→ 85

Diagnosis →	Simulation	Description
	Simulation mode	→ 116
	Sim. pressure	→ 116
	Sim. level	→ 116
	Sim. tank cont.	→ 117
	Sim. current	→ 117
	Sim. alarm/warning	→ 117

Diagnosis →	Enter reset code	Description
	Enter reset code	→ 83

13.1 Overview of parameters in the "Expert" menu

The following table lists all of the parameters that can be included in the "Expert" menu. The page reference indicates where a description of the parameter can be found in the manual.

Depending on the device version and the parameter configuration, not all submenus and parameters are available in every device. Information on this can be found in the parameter description under "Prerequisite".

Expert →	System	Description
	Code definition	→ 80
	Operator code	→ 80

Expert →	System→	Instrument Info	Description
		Cust. tag number	→ 81
		Device tag	→ 81
		Serial number	→ 81
		Firmware Version	→ 81
		Ext. order code	→ 81
		Order Identifier	→ 82
		ENP version	→ 82
		Electr.Serial No	→ 82
		Sensor serial no.	→ 82

Expert →	System→	Administration	Description
		Enter reset code	→ 83

Expert →	Measurement	Description
	Mode	→ 83

Expert →	Measurement→	Basic Setup	Description
		Pos. zero adjust	→ 84
		Calib. Offset	→ 84
		Damping	→ 84
		Press. eng. unit	→ 85
		Temp. Eng. Unit	→ 85
		Sensor temp.	→ 85

Expert →	Measurement→	Meas.	Description
		Set LRV	→ 86
		Set URV	→ 86
		Pressure measured	→ 86
		Sensor pressure	→ 86
		Corrected press.	→ 87
		Press after damping	→ 87

Expert →	Measurement→	Level	Description
		Level selection	→ 88
		Output unit	→ 88
		Height unit	→ 88
		Calibration mode	→ 89 → 89
		Empty calib.	
		Empty pressure	→ 89
		Empty height	→ 90
		Full calib.	→ 90
		Full pressure	→ 90
		Full height	→ 91
		Density unit	→ 91
		Adjust density	→ 91
		Process density	→ 92
		Level before lin.	→ 92

Expert →	Measurement→	Linearization	Description
		Lin. mode	→ 93
		Unit after lin.	→ 93
		Line-numb:	→ 93
		X-val	→ 94
		Y-val	→ 94
		Edit table	→ 94
		Tank description	→ 95
		Tank content	→ 95

Expert →	Measurement→	Sensor limits	Description
		Lower range limit	→ 96
		URL sensor	→ 96

Expert →	Measurement→	Sensor trim	Description
		Lo trim measured	→ 97
		Hi trim measured	→ 97
		Lo Trim Sensor	→ 97
		Hi Trim Sensor	→ 97

Expert →	Output→	Current output	Description
		Output current	→ 98
		Alarm behav. P	→ 98
		Output fail mode	→ 98
		Max. alarm curr.	→ 98
		Set min. current	→ 99

Expert →	Output→	Current output	Description
		Get LRV ("Pressure" only)	→ 99
		Set LRV	→ 99
		Get URV ("Pressure" only)	→ 99
		Set URV	→ 100
		Start-up current	→ 100
		Curr. Trim 4 mA	→ 100
		Curr. Trim 20 mA	→ 101
		Offset Trim 4 mA	→ 101
		Offset Trim 20 mA	→ 101

Expert →	Communication→	HART Config	Description
		Burst Mode	→ 102
		Burst Option	→ 102
		Current Mode	→ 102
		Bus Address	→ 102
		Preamble Number	→ 103

Expert →	Communication→	HART Info	Description
		Device type	→ 104
		Device revision	→ 104
		Manufacturer ID	→ 104
		HART version	→ 104
		Description	→ 104
		HART Message	→ 104
		HART Date	→ 105

Expert →	Communication→	HART Output	Description
		Primary value is	→ 106
		Primary value	→ 106
		Secondary val. is	→ 106
		Secondary value	→ 106
		Third value is	→ 107
		Third value	→ 107
		4th value is	→ 107
		4th value	→ 108

Expert →	Communication→	HART Input	Description
		HART input val.	→ 109
		HART input stat.	→ 109

Expert →	Communication→	HART Input	Description
		HART input unit	→ 109
		HART input form.	→ 109

Expert →	Application		Description
		Electr. Delta P	→ 111
		Fixed ext. value	→ 111
		Auto dens. corr.	→ 111

Expert →	Diagnosis	Description
	Diagnostic code	→ 112
	Last diag. code	→ 112
	Reset Logbook	→ 112
	Min. meas. press.	→ 112
	Max. meas. press.	→ 112
	Reset Peakhold	→ 113
	Operating hours	→ 113
	Config. counter	→ 113

Expert →	Diagnosis→	Diagnostics List	Description
		Diagnostic 1	→ 114
		Diagnostic 2	→ 114
		Diagnostic 3	→ 114
		Diagnostics 4	→ 114
		Diagnostics 5	→ 114
		Diagnostics 6	→ 114
		Diagnostics 7	→ 114
		Diagnostics 8	→ 114
		Diagnostics 9	→ 114
		Diagnostics 10	→ 114

Expert →	Diagnosis→	Event logbook	Description
		Last diag. 1	→ 115
		Last diag. 2	→ 115
		Last diag. 3	→ 115
		Last diag. 4	→ 115
		Last diag. 5	→ 115
		Last diag. 6	→ 115
		Last diag. 7	→ 115
		Last diag. 8	→ 115
		Last diag. 9	→ 115
		Last diag. 10	→ 115

Expert →	Diagnosis→	Simulation	Description
		Simulation mode	→ 🖹 116
		Sim. pressure	→ 🖹 116
		Sim. level	→ 🖹 116
		Sim. tank cont.	→ 🖹 117
		Sim. current	→ 🖹 117
		Sim. alarm/warning	→ 🖹 117

14 Description of device parameters

14.1 Expert → System

Operator code

Write permission Operators/Service engineers/Expert

Description Use this function to enter a code to lock or unlock operation.

User entry
- To lock: Enter a number ≠ the release code (value range: 1 to 9999).
- To unlock: Enter the release code.

Note The release code is "0" in the order configuration. Another release code can be defined in the "Code definition" parameter. If the user has forgotten the release code, the release code can be visible by entering the number "5864".

Factory setting 0

Code definition

Write permission Operators/Service engineers/Expert

Description Use this function to enter a release code with which the device can be unlocked.

Options A number from 0 to 9999

Factory setting 0

14.2 Expert → System → Instrument info

Cust. tag number

Write permission Operators/Service engineers/Expert

Description Enter the device tag e.g. TAG number (max. 8 alphanumeric characters).

Factory setting No entry or according to order specifications

Device tag

Navigation Setup → Extended setup → Device tag

Write permission Operators/Service engineers/Expert

Description Enter the device tag e.g. TAG number (max. 32 alphanumeric characters).

Factory setting No entry or according to order specifications

Serial number

Write permission Parameter is read only. Only Endress+Hauser Service has write permission.

Description Displays the serial number of the device (11 alphanumeric characters).

Firmware Version

Write permission No write permissions. Parameter is read only.

Description Displays the firmware version.

Ext. order code

Write permission Parameter is read only. Only Endress+Hauser Service has write permission.

Description Displays extended order number.

Factory setting According to order specifications

Order identifier

Navigation Diagnosis → Instrument info → Order identifier

Write permission Parameter is read only. Only Endress+Hauser Service has write permission.

Description Displays the order identifier.

Factory setting According to order specifications

ENP version

Write permission Operators/Service engineers/Expert

Description Displays the ENP version
(ENP = electronic nameplate)

Electr.serial no

Write permission No write permissions. Parameter is read only.

Description Displays the serial number of the main electronics (11 alphanumeric characters).

Sensor serial no.

Write permission No write permissions. Parameter is read only.

Description Displays the serial number of the main electronics (11 alphanumeric characters).

14.3 Expert → System → Management

Enter reset code

Write permission Operators/Service engineers/Expert

Description Reset parameters completely or partially to the factory values or order configuration by entering a reset code, see "Resetting to factory settings (reset)" section.

Factory setting 0

14.4 Expert → Measurement → Measuring mode

Measuring mode

⚠ WARNING

Changing the measuring mode affects the span (URV)
This situation can result in product overflow.
- ▶ If the measuring mode is changed, the setting for the span (URV) must be checked in the "Setup" operating menu and readjusted if necessary.

Write permission Operators/Service engineers/Expert

Description Select the measuring mode. The operating menu is structured differently depending on the measuring mode selected.

Options
- Meas.
- Level

Factory setting Pressure or according to order specifications

14.5 Expert → Measurement → Basic setup

Pos. zero adjust

Write permission Operators/Service engineers/Expert

Description Position adjustment – the pressure difference between zero (set point) and the measured pressure need not be known.

Example
- Measured value = 2.2 mbar (0.033 psi)
- You correct the measured value via the "Pos. zero adjust" parameter with the "Confirm" option. i.e. This means that you are assigning the value 0.0 to the pressure present.
- Measured value (after position adjustment) = 0.0 mbar
- The current value is also corrected.

Options
- Confirm
- Cancel

Factory setting Cancel

Calib. offset

Write permission Service engineers/Expert

Description Position adjustment – the pressure difference between the set point and the measured pressure must be known.

Example
- Measured value = 982.2 mbar (14.73 psi)
- You use the "Calib. offset" parameter to correct the measured value with the value entered, e.g. 2.2 mbar (0.033 psi). i.e. This means that you are assigning the value 980.0 (14.7 psi) to the pressure present.
- Measured value (after pos. zero adjust) = 980.0 mbar (14.7 psi)
- The current value is also corrected.

Factory setting 0.0

Damping

Write permission Operators/Service engineers/Expert
(if the "Damping" DIP switch is set to "on")

Description Enter damping time (time constant τ).
The damping affects the speed at which the measured value reacts to changes in pressure.

Input range 0.0 to 999.0 s

Factory setting 2.0 sec. or according to order specifications

Press. eng. unit

Write permission
Operators/Service engineers/Expert

Description
Select the pressure engineering unit. If a new pressure engineering unit is selected, all pressure-specific parameters are converted and displayed with the new unit.

Options
- mbar, bar
- mmH2O, mH2O, inH2O
- ftH2O
- Pa, kPa, MPa
- psi
- mmHg, inHg
- kgf/cm^2

Factory setting
mbar or bar depending on the nominal measuring range of the sensor module, or as per order specifications

Temp. eng. unit

Write permission
Service engineers/Expert

Description
Select the unit for the temperature measured values.

Options
- °C
- °F
- K

Note
The setting affects the unit for the "Sensor temp." parameter.

Factory setting
°C

Sensor temp.

Write permission
No write permissions. Parameter is read only.

Description
Displays the temperature currently measured in the sensor module. This can deviate from the process temperature.

14.6 Expert → Measurement → Pressure

Set LRV

Write permission Operators/Service engineers/Expert

Description Set the pressure value, level or content for the lower current value (4 mA).

Factory setting
- 0.0 % in Level measuring mode
- 0.0 mbar/bar or in accordance with ordering information in Pressure measuring mode

Set URV

Write permission Operators/Service engineers/Expert

Description Set the pressure value, level or content for the upper current value (20 mA).

Factory setting
- 100.0 % in Level measuring mode
- URL Sensor or according to ordering information in Pressure measuring mode

Meas. pressure

Write permission No write permissions. Parameter is read only.

Description Displays the measured pressure after sensor trim, position adjustment and damping.

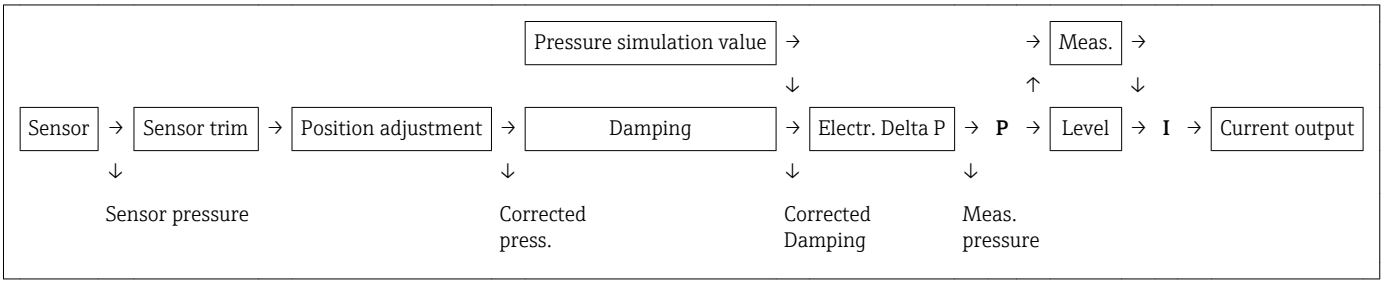

Sensor pressure

Write permission No write permissions. Parameter is read only.

Description Displays the measured pressure before the sensor trim.

Corrected press.

Write permission No write permissions. Parameter is read only.

Description Displays the measured pressure after sensor trim and position adjustment.

Pressure after damping

Write permission No write permissions. Parameter is read only.

Description Displays the measured pressure after sensor trim, position adjustment and damping.

14.7 Expert → Measurement → Level

Level selection

Write permission Operators/Service engineers/Expert

Description Select the method for calculating the level

Options
- In pressure
  If this option is selected, specify two pressure/level value pairs. The level value is displayed directly in the unit that you select via the "Output unit" parameter.
- In height
  If this option is selected, specify two height/level value pairs. From the measured pressure, the device first calculates the height using the density. Along with the two value pairs specified, this information is then used to calculate the level in the "Output unit" selected.

Factory setting In pressure

Output unit

Description Select the unit for the measured value display for the level before linearization.

Note The selected unit is used only to describe the measured value i.e. when a new output unit is selected, the measured value is not converted.

Example
- Current measured value: 0.3 ft
- New output unit: m
- New measured value: 0.3 m

Options
- %
- mm, cm, dm, m
- ft, inch
- m^3, in^3
- l, hl
- ft^3
- gal, Igal
- kg, t
- lb

Factory setting %

Height unit

Write permission Operators/Service engineers/Expert

Description Select the height unit. The measured pressure is converted to the selected height unit using the "Adjust Density" parameter.

Prerequisite "Level selection" = "In height"

Options
- mm
- m
- in
- ft

Factory setting m

Calibration mode

Write permission Operators/Service engineers/Expert

Description Select the calibration mode.

Options
- Wet
  Wet calibration takes place by filling and emptying the vessel. In the case of two different levels, the level, volume, mass or percentage value entered is assigned to the pressure measured at this point in time ("Empty calib." and "Full calib." parameters).
- Dry
  Dry calibration is a theoretical calibration. For this calibration, you specify two pressure-level value pairs or height-level value pairs via the following parameters: "Empty calib.", "Empty pressure", "Empty height", "Full calib.", "Full pressure", "Full height".

Factory setting Wet

Empty calib.

Write permission Operators/Service engineers/Expert

Description Enter the output value for the lower calibration point (vessel is empty). The unit defined in "Output unit" must be used here.

Note
- For wet calibration, the level (e.g. empty or partially filled vessel) must actually be present. The associated pressure is then automatically recorded by the device.
- In the case of dry calibration, the level (vessel empty) does not have to be available. For the "In pressure" level selection, the associated pressure must be entered in the "Empty pressure" parameter. The associated height must be entered in the "Empty height" parameter for the "In height" level selection.

Factory setting 0.0

Empty pressure

Write permission Operators/Service engineers/Expert

Description Enter the pressure value for the lower calibration point (vessel empty). See also "Empty calib.".

Prerequisite
- "Level selection" = In pressure
- "Calibration mode" = Dry -> entry
- "Calibration mode" = Wet -> display

Factory setting 0.0

Empty height

Write permission Operators/Service engineers/Expert

Description Enter the height value for the lower calibration point (vessel empty). The unit is selected via the "Height unit" parameter.

Prerequisite
- "Level selection" = "In height"
- "Calibration mode" = Dry -> entry
- "Calibration mode" = Wet -> display

Factory setting 0.0

Full calib.

Write permission Operators/Service engineers/Expert

Description Enter the output value for the upper calibration point (vessel full). The unit defined in "Output unit" must be used here.

Note
- For wet calibration, the level (e.g. empty or partially filled vessel) must actually be present. The associated pressure is then automatically recorded by the device.
- In the case of dry calibration, the level (vessel full) does not have to be available. For the "In pressure" level selection, the associated pressure must be entered in the "Full pressure" parameter. The associated height has to be entered in the "Full height" parameter for the "In height" level selection.

Factory setting 100.0

Full pressure

Write permission Operators/Service engineers/Expert

Description Enter the pressure value for the upper calibration point (vessel full). See also "Full calib.".

Prerequisite
- "Level selection" = In pressure
- "Calibration mode" = Dry -> entry
- "Calibration mode" = Wet -> display

Factory setting URL of the sensor module

Full height

Write permission Operators/Service engineers/Expert

Description Enter the height value for the upper calibration point (vessel full). The unit is selected via the "Height unit" parameter.

Prerequisite
- "Level selection" = "In height"
- "Calibration mode" = Dry -> entry
- "Calibration mode" = Wet -> display

Factory setting URL is converted to a level unit

Density unit

Write permission Service engineers/Expert

Description Displays the density unit. The measured pressure is converted to a height using the "Height unit", "Adjust density" and "Process density" parameters.

Options
- g/cm^3
- kg/m^3
- kg/dm^3
- lb/in^3
- lb/ft^3

Factory setting g/cm^3

Adjust density

Write permission Operators/Service engineers/Expert

Description Enter the density of the medium used to perform the calibration. The measured pressure is converted to a height using the "Height unit" and "Adjust density" parameters.
Input: Auto dens. corr. = Off
Display: Auto dens. corr. ≠ Off

Factory setting 1.0

Process density

Write permission Operators/Service engineers/Expert

Description Enter a new density value for density correction. The calibration was carried out with the medium water, for example. Now the vessel is to be used for another medium with another density. The calibration is corrected appropriately by entering the new density value in the "Process Density" parameter.
Input: Auto dens. corr. = Off
Display: Auto dens. corr. ≠ Off

Note If, after completing a wet calibration, you change to dry calibration using the "Calibration mode" parameter, the density for the "Adjust density" and "Process density" parameters must be entered correctly before changing the calibration mode.

Factory setting 1.0

Level before lin.

Write permission No write permissions. Parameter is read only.

Description Displays the level value prior to linearization.

14.8 Expert → Measurement → Linearization

Lin. mode

Write permission Operators/Service engineers/Expert

Description Select the linearization mode.

Options
- Linear
  The level is output without being converted beforehand. "Level before lin" is output.
- Erase table
  The existing linearization table is deleted.
- Manual entry (sets the table to edit mode, an alarm is output):
  The value pairs of the table (X-value and Y-value) are entered manually.
- Semi-automatic entry (sets the table to edit mode, an alarm is output):
  The vessel is emptied or filled in stages in this entry mode. The device automatically records the level value (X-value). The associated volume, mass or % value is entered manually (Y-value).
- Activate table
  The table entered is activated and checked with this option. The device shows the level after linearization.

Factory setting Linear

Unit after lin.

Write permission Operators/Service engineers/Expert

Description Select volume unit, mass, height or % (unit of the Y-value).

Options
- %
- cm, dm, m, mm
- hl
- in^3, ft^3, m^3,
- l
- in, ft
- kg, t
- lb
- gal
- Igal

Factory setting %

Line-numb

Write permission Operators/Service engineers/Expert

Description Enter the number of the current point in the table. Subsequent entries in "X-val" and "Y-val" relate to this point.

Input range 1...32

X-val

Write permission Operators/Service engineers/Expert

Description Enter the X-value (level before linearization) for the specific point in the table and confirm.

Note
- If "Lin. mode" = "Manual", the level value must be entered.
- If "Lin. mode" = "Semiautomatic", the level value is displayed and must be confirmed by entering the paired Y-value.

Y-value

Ceramic

Write permission Operators/Service engineers/Expert

Description Enter the Y-value (value after linearization) for the specific point in the table. The unit is determined by "Unit after lin.".

Note The linearization table must be monotonic (increasing or decreasing).

Edit table

Write permission Operators/Service engineers/Expert

Description Select the function for entering the table.

Options
- Next point: Enter the next point.
- Current point: Stay on the current point to correct a mistake, for example.
- Last point: Skip back to the previous point to correct a mistake, for example.
- Insert point: Insert an additional point (see example below).
- Delete point: Delete the current point (see example below).

Example

Add point, in this case between the 4th and 5th point for example
- Select point 5 via the "Line-numb" parameter.
- Select the "Insert point" option via the "Edit table" parameter.
- Point 5 is displayed for the "Line-numb" parameter. Enter new values for the "X-val" and "Y-val" parameters.

Delete point, in this case the 5th point for example
- Select point 5 via the "Line-numb" parameter.
- Select the "Delete point" option via the "Edit table" parameter.
- The 5th point is deleted. All of the following points are pushed up one number i.e. following deletion, the 6th point becomes Point 5.

Factory setting

Current point

Tank description

Write permission

Operators/Service engineers/Expert

Description

Enter tank description (max. 32 alphanumeric characters).

Tank content

Write permission

Operators/Service engineers/Expert

Description

Displays the level value after linearization.

14.9 Expert → Measurement → Sensor limits

LRL sensor

Write permission No write permissions. Parameter is read only.

Description Displays the lower-range limit of the sensor.

URL sensor

Write permission No write permissions. Parameter is read only.

Description Displays the upper-range limit of the sensor.

14.10 Expert → Measurement → Sensor trim

Lo trim measured

Write permission No write permissions. Parameter is read only.

Description Displays the reference pressure present to be accepted for the lower calibration point.

Hi trim measured

Write permission No write permissions. Parameter is read only.

Description Displays the reference pressure present to be accepted for the upper calibration point.

Lo sensor trim

Write permission No write permissions. Parameter is read only.

Description Sensor module recalibration by entering a target pressure while simultaneously and automatically accepting a reference pressure present for the lower calibration point.

Hi sensor trim

Write permission No write permissions. Parameter is read only.

Description Sensor module recalibration by entering a target pressure while simultaneously and automatically accepting a reference pressure present for the upper calibration point.

14.11 Expert → Output → Current output

Output current

Write permission Operators/Service engineers/Expert

Description Displays the current current value.

Alarm behav. P

Write permission Operators/Service engineers/Expert

Description Behavior of current output if sensor module limits are are exceeded or not reached.

Options
- Warning
  The device continues to measure. An error message is displayed.
- Alarm
  The output signal assumes a value that can be specified by the "Output fail mode" function.

Factory setting Warning

Output fail mode

Write permission Operators/Service engineers/Expert

Description Select Output fail mode. In the event of an alarm, the current assumes the current value specified with this parameter.

Options
- Max: can be set from 21 to 23 mA, see also "High alarm curr."
- Hold: last measured value is held.
- Min: 3.6 mA

Factory setting Max (22 mA)

High alarm curr.

Write permission Operators/Service engineers/Expert

Description Enter the current value for maximum alarm current. See also "Output fail mode".

Input range 21 to 23 mA

Factory setting 22 mA

Set min. current

Write permission Operators/Service engineers/Expert

Description Enter lower current limit.
Some switching units accept no current smaller than 4.0 mA.

Options
- 3.8 mA
- 4.0 mA

Factory setting 3.8 mA

Get LRV

Write permission Operators/Service engineers/Expert

Description Set the lower-range value – reference pressure is present at the device. The pressure for the lower current value (4 mA) is present at the device. Use the "Confirm" option to assign the lower current value to the applied pressure value.

Prerequisite: Pressure measuring mode

Options
- Cancel
- Confirm

Factory setting Cancel

Set LRV

Write permission Operators/Service engineers/Expert

Description Set the pressure value, level or content for the lower current value (4 mA).

Factory setting
- 0.0 % in Level measuring mode
- 0.0 mbar/bar or in accordance with ordering information in Pressure measuring mode

Get URV (pressure measuring mode)

Write permission Operators/Service engineers/Expert

Description Set the upper-range value – reference pressure is present at the device. The pressure for the upper current value (20 mA) is present at the device. Use the "Confirm" option to assign the applied pressure value to the upper current value.

Prerequisite: Pressure measuring mode

Options
- Cancel
- Confirm

Factory setting Cancel

Set URV

Navigation Setup → Set URV
Setup → Extended setup → Current output → Set URV

Write permission Operators/Service engineers/Expert

Description Set the pressure value, level or content for the upper current value (20 mA).

Factory setting
- 100.0 % in Level measuring mode
- URL Sensor or according to ordering information in Pressure measuring mode

Start-up current

Write permission Service engineers/Expert

Description Entry of the start current. This setting also applies in HART multidrop mode.

Options
- 12 mA
- Max alarm (22 mA, cannot be set)

Factory setting 12 mA

Curr. trim 4mA

Write permission Service engineers/Expert

Description Enter the pressure value for the lower point (4 mA) of the current partial regression lines. Using this parameter and "Curr. trim 20 mA", you can adapt the current output to the transmission conditions.

Options Carry out the current trim for the lower point as follows.
- Select the "Current" option in the "Simulation mode" parameter.
- In the "Sim current" parameter, configure the "4 mA value".
- Enter the current value measured using the switching unit in the "Curr. trim 4mA" parameter.

Input range Measured current ±0.2 mA

Factory setting 4 mA

Curr. trim 20mA

Write permission Service engineers/Expert

Description Enter the pressure value for the upper point (20 mA) of the current partial regression lines. Using this parameter and "Curr. Trim 4 mA", you can adapt the current output to the transmission conditions.

Options Carry out the current trim for the upper point as follows:
- Select the "Current" option in the "Simulation mode" parameter.
- In the "Sim current" parameter, configure the value "20 mA".
- Enter the current value measured using the switching unit in the "Curr. trim 20mA" parameter.

Input range Measured current ±1 mA

Factory setting 20 mA

Offset trim 4mA

Write permission Service engineers/Expert

Description Display/enter the difference between 4 mA and the value entered for the parameter "Curr. trim 4mA".

Factory setting 0

Offset trim 20mA

Write permission Service engineers/Expert

Description Display/enter the difference between 20 mA and the value entered for the parameter "Curr. trim 20mA".

Factory setting 0

14.12 Expert→ Communication → HART config.

Burst mode

Write permission Service engineers/Expert

Description Switching burst mode on and off.

Options
- On
- Off

Factory setting Off

Burst option

Write permission Service engineers/Expert

Description You can use this parameter to define which command is sent to the master.

Options
- 1 (HART command 1)
- 2 (HART command 2)
- 3 (HART command 3)
- 9 (HART command 9)
- 33 (HART command 33)

Factory setting 1 (HART command 1)

Current mode

Write permission Service engineers/Expert

Description Configure current mode for HART communication.

Options
- Signaling
  Measured value transmission by the current value
- Fixed
  Fixed current 4.0 mA (multidrop mode)
  (Measured value transmission via HART digital communication only)

Factory setting Signaling

Bus address

Write permission	Service engineers/Expert
Description	Use this function to enter the address via which a data exchange is to take place via HART protocol. (HART 5.0 master: Range 0 to 15, where address = 0 calls up the "Signaling" setting; HART 6.0 master: Range 0 to 63)
Factory setting	0

Preamble number

Write permission	Service engineers/Expert
Description	Use this function to enter the number of preambles in the HART protocol. (Synchronization of the modem components along a transmission path, each modem component could "swallow" one byte, at least 2 bytes must be the preamble.)
Input range	2...20
Factory setting	5

14.13 Expert→ Communication → HART info

Device type

Write permission No write permissions. Parameter is read only.

Description Display of the numerical ID of the device
Waterpilot FMX21: 36

Device revision

Write permission No write permissions. Parameter is read only.

Description Display of device revision (e.g. 1)

Manufacturer ID

Write permission No write permissions. Parameter is read only.

Description Displays the HART manufacturer ID in a decimal digit format.
Here: 17 (Endress+Hauser)

HART version

Write permission No write permissions. Parameter is read only.

Description Displays HART version .
Waterpilot FMX21: 6

Description

Write permission Service engineers/Expert

Description Enter measuring point description (max. 16 alphanumeric characters).

HART message

Write permission Service engineers/Expert

Description Enter message (max. 32 alphanumeric characters). Upon request from the master, this message is sent via the HART protocol.

HART date

Write permission Service engineers/Expert

Description Enter the date of the last configuration change.

Factory setting DD/MM/YY (date of the final test)

14.14 Expert→ Communication → HART output

Primary value is

Write permission No write permissions. Parameter is read only.

Description Indicates which measured value is transmitted via the HART protocol as the primary process value.

Factory setting Depending on the selected measuring mode, the following measured values can be displayed:
- "Pressure" measuring mode: "Meas. pressure"
- "Level" measuring mode, Lin. mode "Linear": "Level before Lin"
- "Level" measuring mode, Lin. mode "Activate table": "Tank content"

Primary value

Write permission No write permissions. Parameter is read only.

Description The primary value is displayed.

Secondary val.is

Write permission No write permissions. Parameter is read only.

Description Indicates which measured value is transmitted via the HART protocol as the secondary process value. The process value is configured via HART command 51.

Factory setting
- "Pressure" measuring mode: "Corrected press."
- "Level" measuring mode, "Linear" lin. mode: "Meas. pressure"
- "Level" measuring mode, Lin. mode "Activate table": "Level before linearization"

Display Depending on the selected measuring mode, the following measured values can be displayed:
- "Meas. pressure"
- "Sensor pressure"
- "Corrected press."
- "Pressure after damping"
- "Sensor temp."
- "Level before Lin"
- "Tank content"
- "Process density" (corrected)

Secondary value

Write permission No write permissions. Parameter is read only.

Description The secondary value is displayed.

Third value is

Write permission No write permissions. Parameter is read only.

Description Indicates which measured value is transmitted via the HART protocol as the third process value. The process value is configured via HART command 51.

Factory setting
- "Pressure" measuring mode: "Sensor pressure"
- "Level" measuring mode, "Linear" lin. mode: "Corrected press."
- "Level" measuring mode, "Activate table" lin. mode: "Meas. pressure"

Display Depending on the selected measuring mode, the following measured values can be displayed:
- "Meas. pressure"
- "Sensor pressure"
- "Corrected press."
- "Pressure after damping"
- "Sensor temp."
- "Level before Lin"
- "Tank content"
- "Process density" (corrected)

Third value is

Write permission No write permissions. Parameter is read only.

Description The third value is displayed.

4th value is

Write permission No write permissions. Parameter is read only.

Description Indicates which measured value is transmitted via the HART protocol as the fourth process value. The process value is configured via HART command 51.

Factory setting
- "Pressure" measuring mode: "Sensor temp"
- "Level" measuring mode, "Linear" lin. mode: "Sensor temp."
- "Level" measuring mode, "Activate table" lin. mode: "Sensor temp."

Display Depending on the selected measuring mode, the following measured values can be displayed:

- "Meas. pressure"
- "Sensor pressure"
- "Corrected press."
- "Pressure after damping"
- "Sensor temp."
- "Level before Lin"
- "Tank content"
- "Process density" (corrected)

4th value

Write permission No write permissions. Parameter is read only.

Description The fourth value is displayed.

14.15 Expert→ Communication → HART input

HART input value

Write permission No write permissions. Parameter is read only.

Description Display of the HART input value

HART input stat.

Write permission No write permissions. Parameter is read only.

Description Display of the HART input status
Bad / Uncertain / Good

HART input unit

Write permission No write permissions. Parameter is read only.

Description Display of the unit for the HART input value.

Display
- Unknown
- mbar, bar
- mmH2O, ftH2O, inH2O
- Pa, hPa, kPa, MPa
- psi
- mmHg, inHg
- Torr
- g/cm^2, kg/cm^2
- lb/ft^2
- atm
- °C, °F, K, R

Factory setting Unknown

HART input form.

Write permission Operators/Service engineers/Expert

Description Number of decimal places of the displayed input value.

Options

- x.x
- x.xx
- x.xxx
- x.xxxx
- x.xxxxx

Factory setting

x.x

14.16 Expert → Application

Electr. Delta P

Write permission

Description Switching off, switching on the Electr. Delta P application with external or constant value.

Options
- Off
- External value
- Constant

Factory setting Off

Fixed ext. value

Write permission

Description Use this function to enter the constant value. The value refers to "HART input unit"

Factory setting 0.0

Auto dens. corr.

Write permission

Description For switching the auto dens. corr. application on or off with an external or internal temperature value.
Before performing a calibration (dry or wet), auto-density compensation must be switched on if this function is to be used. As soon as "Auto dens. corr." is switched on, the field for entering the "Process density" and "Adjust density" is disabled.
The calibration density remains the last value until it is overwritten by a calibration. The process density remains the last value until it is overwritten when the system recalculates the value.
Automatic density compensation is performed for the 0 to 70 °C (32 to 158 °F) temperature range. The density values for water are used for this density compensation.

Prerequisite Level mode

Options
- Off
- Sensor temperature
- External value (only if Electr. Delta P option is off or constant)

Factory setting
- Off
- On (if the option "IC" was selected in the "Service" order code when ordering)

14.17 Expert → Diagnosis

Diagnostic code

Write permission No write permissions. Parameter is read only.

Description Displays the diagnostic message with the highest priority currently present.

Last diag. code

Write permission No write permissions. Parameter is read only.

Description Displays the last diagnostic message that occurred and was rectified.

Note
- Digital communication: the last message is displayed.
- Use the "Reset logbook" parameter to clear the messages listed in the parameter "Last diag. code".

Reset logbook

Write permission Service engineers/Expert

Description Use this parameter to reset all messages of the parameter "Last diag. code" and the event logbook "Last diag. 1" to "Last diag. 10".

Options
- Cancel
- Confirm

Factory setting Cancel

Min. meas. press.

Write permission No write permissions. Parameter is read only.

Description Displays the lowest pressure value measured (peakhold indicator). You can reset this indicator by means of the "Reset peakhold" parameter.

Max. meas. press.

Write permission No write permissions. Parameter is read only.

Description Displays the highest pressure value measured (peakhold indicator). You can reset this indicator by means of the "Reset peakhold" parameter.

Reset peakhold

Write permission Service engineers/Expert

Description You can reset the "Min. meas. press." and "Max. meas. press." indicators with this parameter.

Options
- Cancel
- Confirm

Factory setting Cancel

Operating hours

Write permission No write permissions. Parameter is read only.

Description Displays the hours of operation. This parameter cannot be reset.

Config. recorder

Write permission Operators/Service engineers/Expert

Description Displays the configuration counter.
This counter is increased by one every time a parameter or group is changed. The counter counts up to 65535 and then starts again at zero.

14.18 Expert → Diagnosis → Diagnostic list

Diagnostic 1 (075)
Diagnostic 2 (076)
Diagnostic 3 (077)
Diagnostic 4 (078)
Diagnostic 5 (079)
Diagnostic 6 (080)
Diagnostic 7 (081)
Diagnostic 8 (082)
Diagnostic 9 (083)
Diagnostic 10 (084)

Navigation Diagnosis → Diagnostic list

Write permission No write permissions. Parameter is read only.

Description This parameter contains up to ten diagnosis messages that are currently pending, arranged in order of priority.

14.19 Expert → Diagnosis→ Event logbook

Last diag. 1 (085)
Last diag. 2 (086)
Last diag. 3 (087)
Last diag. 4 (088)
Last diag. 5 (089)
Last diag. 6 (090)
Last diag. 7 (091)
Last diag. 8 (092)
Last diag. 9 (093)
Last diag. 10 (094)

Navigation Diagnosis → Event logbook

Write permission No write permissions. Parameter is read only.

Description This parameter contains the last 10 diagnosis messages to occur and be rectified. They can be reset using the "Reset logbook" parameter.
Errors which have occurred multiple times are displayed once only.
Errors may also appear multiple times if another error has occurred in the meantime. The messages are displayed in chronological order.

14.20 Expert → Diagnosis → Simulation

Simulation mode

Write permission Operators/Service engineers/Expert

Description Switch on simulation and select the simulation mode. When changing the measuring mode or the "Lin. mode" level type or when the device is restarted, any simulation that may be running is switched off.

Options
- None
- Pressure →see this table, "Sim. pressure" parameter
- Level, → see this table, "Sim. level" parameter
- Tank content, → see this table, "Sim. tank cont." parameter
- Current, → see this table, "Sim. current" parameter
- Alarm/warning, → see this table, "Sim. error no."

Factory setting None

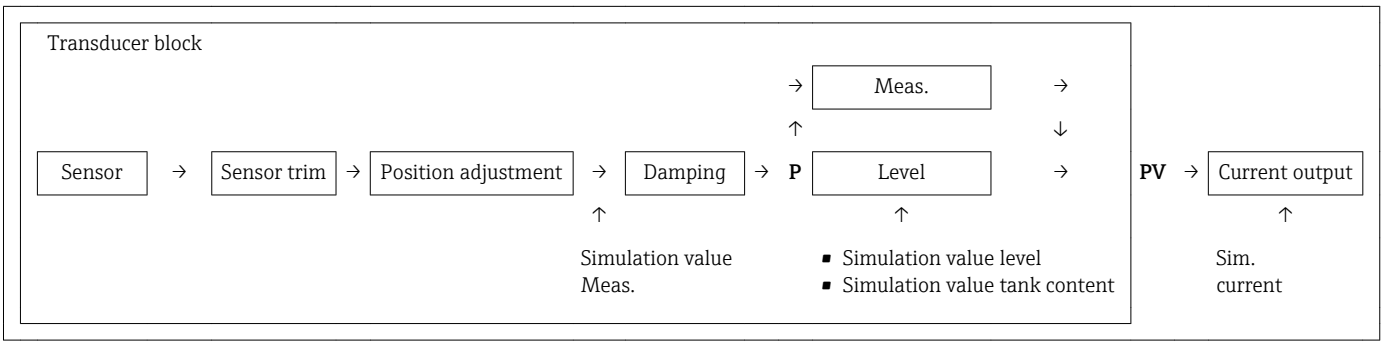

Sim. pressure

Write permission Operators/Service engineers/Expert

Description Enter the simulation value. See also "Simulation mode".

Prerequisite "Simulation mode" = Pressure

Value at switch-on Current pressure measured value

Sim. level

Write permission Operators/Service engineers/Expert

Description Enter the simulation value. See also "Simulation mode".

Prerequisite "Measuring mode" = Level and "Simulation mode" = Level

Value at switch-on Current level measured value

Sim. tank cont.

Write permission Operators/Service engineers/Expert

Description Enter the simulation value. See also "Simulation mode".

Prerequisite "Measuring Mode" = level, Lin mode "Activate table" and "Simulation Mode" = Tank content

Value at switch-on Current tank content

Sim. current

Write permission Operators/Service engineers/Expert

Description Enter the simulation value. See also "Simulation mode".

Prerequisite "Simulation Mode" = Current value

Value at switch-on Current current value

Sim. alarm/warning

Write permission Operators/Service engineers/Expert

Description Enter the simulation value. See also "Simulation mode".

Prerequisite "Simulation Mode" = Alarm/Warning

Factory setting: 484 (Simulation active)

15 Accessories

15.1 Suspension clamp

- For easy installation of the FMX21, Endress+Hauser offers a mounting clamp .
- Material: 316L (1.4404) and fiber-glass reinforced PA (polyamide)
- Order number: 52006151
- Ordering information: Product Configurator order code for "Accessories enclosed"

15.2 Terminal box

- Terminal box IP66/IP67 with GORE-TEX® filter incl. 3 installed terminals The terminal box is also suitable for installing a TMT182 temperature head transmitter or for four additional terminals (order no.: 52008938)
- Order number: 52006152 ordering information: Product Configurator order code for "Accessories enclosed", option "PS"

The terminal box is not designed for the FMX21 with type of protection Ex nA in hazardous areas. If the terminal box is used in a hazardous area, the Safety Instructions of the relevant device must be observed, as well as the applicable regulations for explosion protection.

15.3 Additional weight

15.3.1 For FMX21 with external diameter of 22 mm (0.87 in) or 29 mm (1.14 in)

- Endress+Hauser offers additional weights to prevent sideways movement that results in measuring errors, or to make it easier to lower the device in a guide tube. You can screw several weights together. The weights are screwed directly onto the FMX21. For the FMX21 with external diameter of 29 mm (1.14 in), a maximum of 5 weights may be screwed on. In conjunction with the Ex nA approval, a maximum of one additional weight is permitted for the FMX21 with external diameter of 29 mm (1.14 in).
- Material: 316L (1.4435)
- Weight: 300 g (10.581 oz)
- Order number: 52006153 Ordering information: Product Configurator order code for "Accessories enclosed", option "PU"

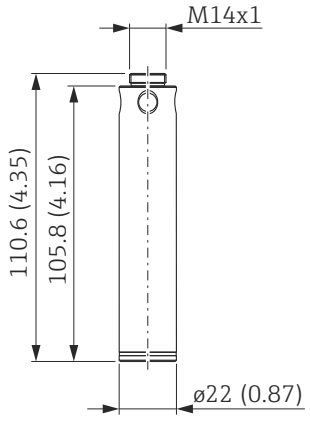

Engineering unit mm (in)

15.4 Temperature head transmitter TMT182 (4 to 20 mA HART)

- Temperature head transmitter 2-wire, configured for a measuring range of −20 to +80 °C (−4 to +158 °F). This configuration offers a temperature range of 100 K which can be easily mapped. Please note that the Pt100 resistance thermometer is suitable for a temperature range of −10 to +70 °C (−14 to +176 °F)−10 to +70 °C.
- Order no.: 51001023 ordering information: Product Configurator order code for "Accessories enclosed", option "PT"

The TMT182 temperature head transmitter is not designed for use in hazardous areas incl. CSA GP.

15.5 Pt-100 resistance thermometer

Ordering information: Product Configurator order code for "Accessories mounted", option "NB"

15.6 Cable mounting screws

Endress+Hauser offers a cable mounting screw for easy installation of the FMX21 and to seal the measuring aperture.

- Order number for cable mounting screw:
  - 52008264 (G 1½" A) Ordering information: Product Configurator order code for "Accessories enclosed", option "PQ"
  - 52009311 (NPT 1½") Ordering information: Product Configurator order code for "Accessories enclosed" option "PR"
- Material

15.7 Terminals

- Four terminals in strip for terminal box, suitable for cable cross-section: 0.08 to 2.5 mm^2 (28 to 14 AWG)
- Order number: 52008938

The 4-terminal strip is not designed for use in hazardous areas incl. CSA GP.

15.8 Cable shortening kit

- The cable shortening kit is used to shorten a cable easily and professionally.
- Order number: 71222671, Ordering information: Product Configurator oder code for "Accessories enclosed", option "PW" Associated documentation SD00552P/00/A6.

The cable shortening kit is not designed for the FMX21 with FM/CSA approval.

15.9 Cable marking

- To make installation easier, Endress+Hauser marks the extension cable if a customer-specific length has been ordered
- Cable marking tolerance (distance to lower end of level probe):
  Cable length < 5 m (16 ft): ±17.5 mm (0.69 in)
  Cable length > 5 m (16 ft): ±0.2 %
- Material: PET, stick-on label: acrylic
- Immunity to temperature change: −30 to +100 °C (−22 to +212 °F)

NOTICE

The marking is used exclusively for installation purposes.

- The mark must be thoroughly removed without trace in the case of devices with drinking water approval. The extension cable must not be damaged in the process.

Not for use of the FMX21 in hazardous areas.

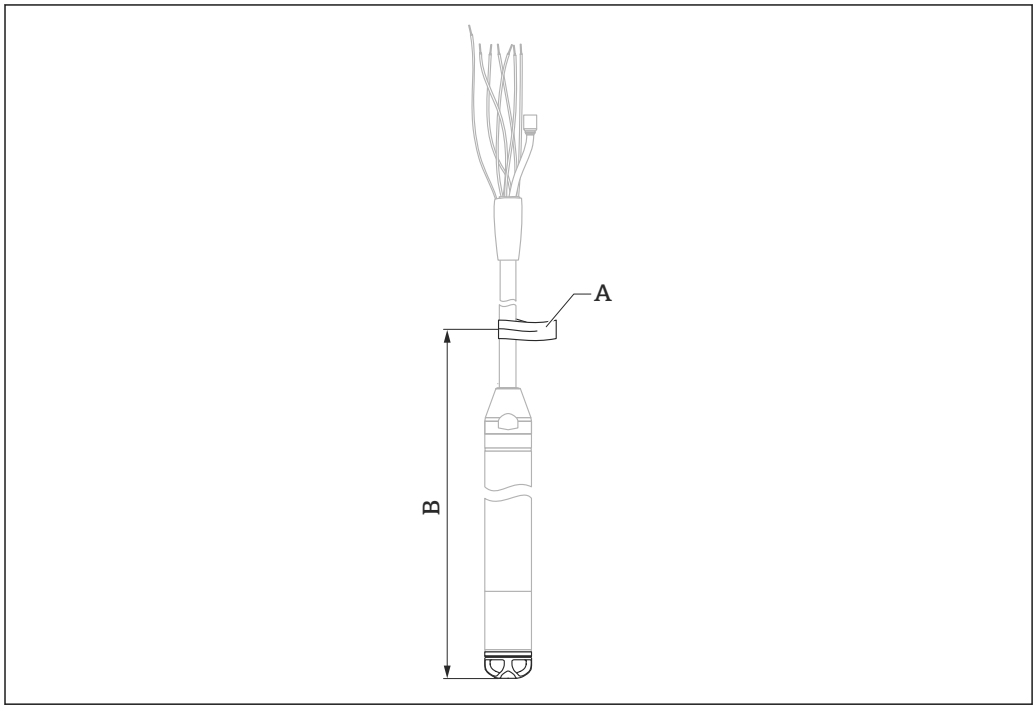

A Cable marking
B Cable marking tolerance

15.10 Testing adapter

15.10.1 For FMX21 with external diameter of 22 mm (0.87 in) or 29 mm (1.14 in)

- Endress+Hauser offers a testing adapter to ease function-testing of the level probes.
- Observe the maximum pressure for compressed air hose and maximum overload for level probe → 122
- Maximum pressure for the quick coupling piece provided: 10 bar (145 psi)
- Adapter material: 304 (1.4301)
- Material of quick coupling piece: anodized aluminum
- Weight: 39 g (1.376 oz)
- Order number 52011868
  Ordering information: Product Configurator order code for "Accessories enclosed", option "PV"

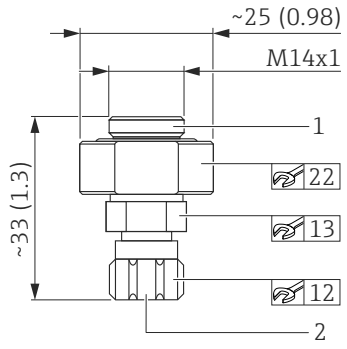

1 FMX21 level probe connection
2 Compressed air hose connection, internal diameter, quick coupling piece 4 mm (0.16 in)

Engineering unit mm (in)

15.10.2 For FMX21 with external diameter of 42 mm (1.65 in)

Order number: 71110310

16 Technical data

16.1 Input

16.1.1 Measured variable

FMX21 + Pt100 (optional)

- Hydrostatic pressure of a liquid
- Pt100: Temperature

TMT182 temperature head transmitter (optional)

Temperature

16.1.2 Measuring range

- Customer-specific measuring ranges or calibration that has been preset in the factory
- Temperature measurement of −10 to +70 °C (+14 to +158 °F) with Pt100 (optional)

Relative pressure

Sensor measuring range [bar (psi)]	Lowest calibratable span [1] [bar (psi)]	Vacuum resistance [bar_{abs} (psi_{abs})]	Option [2]
0.1 (1.5)	0.01 (0.15)	0.3 (4.5)	1C
0.2 (3.0)	0.02 (0.3)	0.3 (4.5)	1D
0.4 (6.0)	0.04 (1.0)	0	1F
0.6 (9.0)	0.06 (1.0)	0	1G
1.0 (15.0)	0.1 (1.5)	0	1H
2.0 (30.0)	0.2 (3.0)	0	1K
4.0 (60.0)	0.4 (6.0)	0	1M
10.0 (150) [3]	1.0 (15)	0	1P
20.0 (300) [3]	2.0 (30)	0	1Q

1) Recommended maximum turn down: 100:1. Highest turn down that can be preset at the factory: 20:1, higher available on request.
2) Product Configurator order code for "Sensor range"
3) These measuring ranges are not available for the special version with plastic insulation, external diameter of 29 mm (1.14 in).

Absolute pressure

Sensor measuring range [bar (psi)]	Lowest calibratable span [1] [bar (psi)]	Vacuum resistance [bar_{abs} (psi_{abs})]	Option [2]
2.0 (30.0)	0.2 (3.0)	0	2K
4.0 (60.0)	0.4 (6.0)	0	2M

Sensor measuring range [bar (psi)]	Lowest calibratable span [1] [bar (psi)]	Vacuum resistance [bar_{abs} (psi_{abs})]	Option [2]
10.0 (150) [3]	1.0 (15)	0	2P
20.0 (300) [3]	2.0 (30)	0	2Q

1) Recommended maximum turn down: 100:1. Highest turn down that can be preset at the factory: 20:1, higher available on request.
2) Product Configurator order code for "Sensor range"
3) These measuring ranges are not available for the special version with plastic insulation, external diameter of 29 mm (1.14 in).

16.1.3 Input signal

FMX21 + Pt100 (optional)

- Change in capacitance
- Pt100: Change in resistance

TMT182 temperature head transmitter (optional)

Pt100 resistance signal, 4 wire

16.2 Output

16.2.1 Output signal

FMX21 + Pt100 (optional)

- 4 to 20 mA with superimposed digital communication protocol HART 6.0, 2-wire for hydrostatic pressure measured value. Ordering information: Product Configurator order code for "output", option "2"
- Pt100: temperature-dependent resistance value

TMT182 temperature head transmitter (optional)

4 to 20 mA with superimposed digital communication protocol HART 5.0 for temperature measured value, 2-wire

16.2.2 Signal range

3.8 mA to 20.5 mA

16.2.3 Output signal

FMX21 + Pt100 (optional)

4 to 20 mA HART.

Options:
- Max. alarm (factory setting 22mA): can be set from 21 to 23 mA
- Hold measured value: last measured value is held
- Min. alarm: 3.6 mA

TMT182 temperature head transmitter (optional)

Options:
- Max. alarm ≥ 21.0 mA
- Min. alarm ≤ 3.6 mA

16.2.4 Maximum load

The maximum load resistance depends on the supply voltage (U) and must be determined individually for each current loop, see formula and diagrams for FMX21 and temperature head transmitter.

The total resistance resulting from the resistances of the connected devices, the connecting cable and, where applicable, the resistance of the extension cable may not exceed the load resistance value.

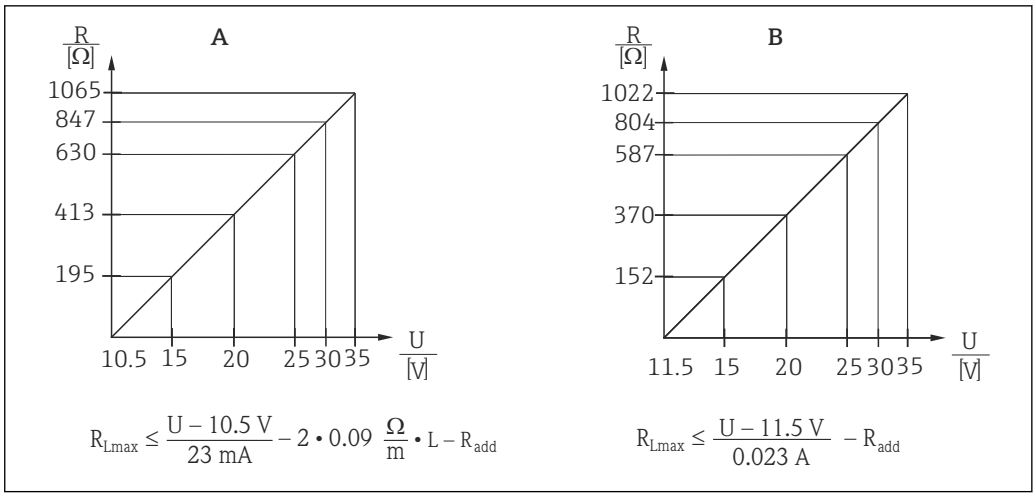

A FMX21 load chart for estimating the load resistance. Additional resistances, such as the resistance of the extension cable, have to be subtracted from the value calculated as shown in the equation.
B Load diagram for TMT182 temperature head transmitter for estimating the load resistance. Additional resistances must be subtracted from the value calculated as shown in the equation
R_{Lmax} Max. load resistance [Ω]
R_{add} Additional resistances, such as resistance of the evaluation unit and/or display unit, cable resistance [Ω]
U Supply voltage [V]
L Basic length of extension cable [m] (cable resistance per wire 0.09 Ω/m)

- When using the measuring device in a hazardous area, the relevant national standards and regulations as well as the Safety Instructions or installation or control drawings (XA) must be adhered to.
- When operating via a handheld terminal or via a PC with an operating program, a minimum communication resistance of 250 Ω must be taken into account.

16.2.5 Protocol-specific data

Manufacturer ID	17 (11 hex)
Device type code	25 (19 hex)
Device revision	01 (01 hex) - SW version 01.00.zz
HART specification	6
DD revision	01
Device description files (DTM, DD)	Information and files under: ▪ www.endress.com ▪ www.hartcomm.org
HART load	Min. 250 Ω

HART device variables	The dynamic variables SV, TV and QV may be assigned to any device variable: **Standard process values for SV, TV (second and third device variable) are dependent on the measuring mode:** ▪ Meas. ▪ Level **Standard process value for QV (fourth device variable) is the sensor temperature:** Temperature **Measured values for PV (first device variable) are dependent on the measuring mode:** ▪ Meas. ▪ Level ▪ Tank content
Supported functions	▪ Burst mode ▪ Additional transmitter status ▪ Device locking ▪ Alternative measuring modes ▪ Catch variable ▪ Long tag

16.3 Performance characteristics

16.3.1 Reference operating conditions

FMX21 + Pt100 (optional)

- As per IEC 60770
- Ambient temperature T_U = constant, in the range of +21 to +33 °C (+70 to +91 °F)
- Humidity φ = constant, in the range of 20 to 80 % rH
- Ambient pressure p_U = constant, in the range of 860 to 1060 mbar (12.47 to 15.37 psi)
- Position of measuring cell constant, vertical in the range of ±1°
- Supply voltage constant: 21 V DC to 27 V DC
- Load with HART: 250 Ω
- Pt100: DIN EN 60770, T_U = +25 °C (+77 °F)

TMT182 temperature head transmitter (optional)

Calibration temperature +25 °C (+77 °F) ±5 K

16.3.2 Reference accuracy

FMX21 + Pt100 (optional)

The reference accuracy comprises the non-linearity after limit point configuration, hysteresis and non-reproducibility in accordance IEC 60770.

Standard version:
Setting ±0.2 %
– to TD 5:1: < 0.2 % of set span
– from TD 5:1 to TD 20:1 ±(0.02 x TD+0.1)

Ordering information: Product Configurator order code for "Reference accuracy", option "G"

Platinum version:
- Setting ±0.1 % (optional)
  – to TD 5:1: < 0.1 % of set span
  – from TD 5:1 to TD 20:1 ±(0.02 x TD)
- Class B as per DIN EN 60751
  Pt100: max. ±1 K

Ordering information: Product Configurator order code for "Reference accuracy" option "D"

TMT182 temperature head transmitter (optional)

- ±0.2 K
- With Pt100: max. ±0.9 K

16.3.3 Resolution

Current output: 1 µA

Reading cycle

HART commands: on average 2 to 3 per second

16.3.4 Long-term stability

FMX21 + Pt100 (optional)

- ≤ 0.1 % of URL/year
- ≤ 0.25 % of URL/5 years

TMT182 temperature head transmitter (optional)

≤ 0.1 K per year

16.3.5 Influence of medium temperature

- Thermal change in the zero output and the output span:
  0 to +30 °C (+32 to +86 °F): < (0.15 + 0.15 x TD)%
  −10 to +70 °C (+14 to +158 °F): < (0.4 + 0.4 x TD)%
- Temperature coefficient (T_K) of the zero output and the output span
  −10 to +70 °C (+14 to +158 °F): 0.1 % / 10 K URL

16.3.6 Warm-up period

FMX21 + Pt100 (optional)

- FMX21: < 6 s
- Pt100: 20 m

TMT182 temperature head transmitter (optional)

4 s

16.3.7 Response time

FMX21 + Pt100 (optional)

- FMX21: 400 ms (T90 time), 500 ms (T99 time)
- Pt100: 160 s (T90 time), 300 s (T99 time)

16.4 Environment

16.4.1 Ambient temperature range

FMX21 + Pt100 (optional)

- With external diameter of 22 mm (0.87 in) and 42 mm (1.65 in):
  −10 to +70 °C (+14 to +158 °F) (= medium temperature)
- With external diameter of 29 mm (1.14 in):
  0 to +50 °C (+32 to +122 °F) (= medium temperature)

Cable

(when mounted in a fixed position)
- With PE: −30 to +70 °C (−22 to +158 °F)
- With FEP: −40 to +70 °C (−40 to +158 °F)
- With PUR: −40 to +70 °C (−40 to +158 °F)

Terminal box

−40 to +80 °C (−40 to +176 °F)

TMT182 temperature head transmitter (optional)

−40 to +85 °C (−40 to +185 °F)

16.4.2 Storage temperature range

FMX21 + Pt100 (optional)

−40 to +80 °C (−40 to +176 °F) (= medium temperature)

Cable

(when mounted in a fixed position)
- With PE: −30 to +70 °C (−22 to +158 °F)
- With FEP: −30 to +80 °C (−40 to +158 °F)
- With PUR: −40 to +80 °C (−40 to +176 °F)

Terminal box

−40 to +80 °C (−40 to +176 °F)

TMT182 temperature head transmitter (optional)

−40 to +100 °C (−40 to +212 °F)

16.4.3 Degree of protection

FMX21 + Pt100 (optional)

IP68, permanently hermetically sealed at 20 bar (290 psi) (~200 m H_2O)

Terminal box (optional)

IP66, IP67

TMT182 temperature head transmitter (optional)

IP00, condensation permitted

16.4.4 Installation height as per IEC61010- 1Ed.3

Up to 2 000 m (6 600 ft) above MSL.

16.4.5 Electromagnetic compatibility (EMC)

FMX21 + Pt100 (optional)

- EMC in accordance with all relevant requirements of EN 61326 series. For details, refer to the Declaration of Conformity.
- Maximum deviation: < 0.5 % of span

TMT182 temperature head transmitter (optional)

EMC in accordance with all relevant requirements of EN 61326 series. For details, refer to the Declaration of Conformity.

16.4.6 Overvoltage protection

FMX21 + Pt100 (optional)

- Integrated overvoltage protection as per EN 61000-4-5 (500 V symmetrical/1000 V asymmetrical)
- Overvoltage protection ≥ 1.0 kV, external if necessary

TMT182 temperature head transmitter (optional)

Overvoltage protection external if necessary

16.5 Process

16.5.1 Medium temperature range

FMX21 + Pt100 (optional)

- With external diameter of 22 mm (0.87 in) and 42 mm (1.65 in):
  −10 to +70 °C (+14 to +158 °F)
- With external diameter of 29 mm (1.14 in):
  0 to +50 °C (+32 to +122 °F)

16.5.2 Medium temperature limit

FMX21 + Pt100 (optional)

With external diameter of 22 mm (0.87 in) and 42 mm (1.65 in):
−20 to +70 °C (−4 to +158 °F)

In hazardous area incl. CSA GP, the medium temperature limit is −10 to +70 °C (+14 to +158 °F).

With external diameter of29 mm (1.14 in): 0 to +50 °C (+32 to +122 °F)

The FMX21 may be operated in this temperature range. The specification can then be exceeded e.g. measuring accuracy

16.6 Additional technical data

See Technical Information:

Index

0 ... 9
4th value . . . 108
4th value is . . . 107

A
Adjust density . . . 91
Alarm behav. P . . . 98
Application . . . 8
Auto dens. corr. . . . 111

B
Burst Mode . . . 102
Burst Option . . . 102
Bus Address . . . 102

C
Calib. Offset . . . 84
Calibration mode . . . 89
CE mark (declaration of conformity) . . . 9
Cleaning . . . 70
Code definition . . . 80
Config. counter . . . 113
Configuration of a level measurement . . . 43
Configuration of a pressure measurement . . . 41
Configure language . . . 39
Configure measuring mode . . . 39
Configure pressure engineering unit . . . 40
Configuring level measurement . . . 43
Configuring pressure measurement . . . 41
Corrected press. . . . 87
Curr. trim 4mA . . . 100
Curr. trim 20mA . . . 101
Current Mode . . . 102
Cust. tag number . . . 81

D
Damping . . . 41, 84
Declaration of Conformity . . . 9
Density correction . . . 111
Density unit . . . 91
Description . . . 104
Designated use . . . 8
Device replacement . . . 71
Device revision . . . 104
Device tag . . . 81
Device type . . . 104
Diagnosis
  Symbols . . . 64
Diagnostic 1 (075) . . . 114
Diagnostic 2 (076) . . . 114
Diagnostic 3 (077) . . . 114
Diagnostic 4 (078) . . . 114
Diagnostic 5 (079) . . . 114
Diagnostic 6 (080) . . . 114
Diagnostic 7 (081) . . . 114
Diagnostic 8 (082) . . . 114
Diagnostic 9 (083) . . . 114
Diagnostic 10 (084) . . . 114
Diagnostic code . . . 112
Diagnostic event . . . 64
Diagnostic events . . . 64
Diagnostic message . . . 64

E
Edit table . . . 94
Electr. Delta P . . . 111
Electr.serial no . . . 82
Empty calib. . . . 89
Empty height . . . 90
Empty pressure . . . 89
ENP version . . . 82
Enter reset code . . . 83
Event text . . . 64
Ext. order code . . . 81
Exterior cleaning . . . 70

F
Firmware Version . . . 81
Fixed ext. value . . . 111
Full calib. . . . 90
Full height . . . 91
Full pressure . . . 90

G
Get LRV . . . 99
Get URV (pressure measuring mode) . . . 99

H
HART Date . . . 105
HART input form. . . . 109
HART input stat. . . . 109
HART input unit . . . 109
HART input val. . . . 109
HART Message . . . 104
HART version . . . 104
HART® protocol
  Operating tools . . . 36
  Process variables . . . 36
  Version data for the device . . . 36
Height unit . . . 88
Hi trim measured . . . 97
Hi Trim Sensor . . . 97

L
Last diag. 1 (085) . . . 115
Last diag. 2 (086) . . . 115
Last diag. 3 (087) . . . 115
Last diag. 4 (088) . . . 115
Last diag. 5 (089) . . . 115
Last diag. 6 (090) . . . 115
Last diag. 7 (091) . . . 115
Last diag. 8 (092) . . . 115
Last diag. 9 (093) . . . 115
Last diag. 10 (094) . . . 115

Last diag. code 112
Level before lin. 92
Level selection 88
Lin. mode 93
Line-numb. 93
Lo trim measured 97
Lo Trim Sensor 97
Local display
see Diagnostic message
see In alarm condition
LRL sensor 96

M
Maintenance 70
Manufacturer ID 104
Max. alarm curr. 98
Max. meas. press. 112
Media 8
Menu
Overview 72, 75
Parameter description 80
Min. meas. press. 112
Mode 83

N
Nameplate 13

O
Offset trim 4mA 101
Offset trim 20mA 101
Operating hours 113
Operating menu
Overview 72, 75
Parameter description 80
Operational safety 8
Operator code 80
Order Identifier 82
Output current 98
Output fail mode 98
Output unit 88

P
Pos. zero adjust 84
Preamble Number 103
Press after damping 87
Press. eng. unit 85
Pressure measured 86
Primary value 106
Primary value is 106
Process density 92
Product safety 9

R
Repair concept 71
Replacing a device 71
Reset Logbook 112
Reset Peakhold 113

S
Safety Instructions
Basic 8
Safety Instructions (XA) 7
Secondary val. is 106
Secondary value 106
Sensor pressure 86
Sensor serial no. 82
Sensor temp. 85
Serial number 81
Set LRV 86, 99
Set min. current 99
Set URV 86, 100
Sim. alarm/warning 117
Sim. current 117
Sim. level 116
Sim. pressure 116
Sim. tank cont. 117
Simulation mode 116
Spare parts 71
Nameplate 71
Staff
Requirements 8
Start-up current 100
Status signals 64

T
Tank content 95
Tank description 95
Temp. Eng. Unit 85
Third value 107
Third value is 107
Troubleshooting 64

U
Unit after lin. 93
URL sensor 96
Use of the measuring devices
Borderline cases 8
Incorrect use 8
Using measuring device
see Designated use

W
W@M Device Viewer 71
Workplace safety 8

X
X-value 94

Y
Y-value 94

www.addresses.endress.com

Endress+Hauser

People for Process Automation

10.19 - E1-5 – ENDRESS & HAUSER DISSOLVED OXYGEN SENSOR

Operating Instructions
Oxymax COS22D

Sensor for the measurement of dissolved oxygen with Memosens technology

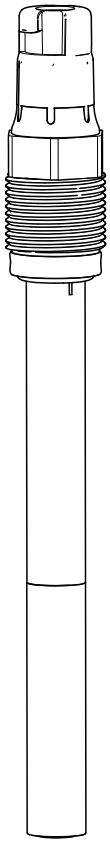

Endress+Hauser
People for Process Automation

Table of contents

1 Document information 4
1.1 Warnings 4
1.2 Symbols 4

2 Basic safety instructions 5
2.1 Requirements for personnel 5
2.2 Designated use 5
2.3 Occupational safety 5
2.4 Operational safety 6
2.5 Product safety 6

3 Device description, function 9
3.1 Amperometric measuring principle 9
3.2 Sensor design 9
3.3 Membrane body 9
3.4 Memosens technology 10
3.5 Polarization 10

4 Incoming acceptance and product identification 11
4.1 Incoming acceptance 11
4.2 Product identification 11
4.3 Scope of delivery 12
4.4 Certificates and approvals 12

5 Installation 14
5.1 Installation conditions 14
5.2 Mounting the sensor 15
5.3 Installation examples 16
5.4 Post-installation check 18

6 Electrical connection 19
6.1 Connection guide (COS22D-BA/NA only) 19
6.2 Connecting the sensor 20
6.3 Ensuring the degree of protection 20
6.4 Post-connection check 20

7 Calibration and adjustment 21
7.1 Types of calibration 21
7.2 Calibration in air 21
7.3 Calculation example for the calibration value 22
7.4 Zero point calibration 23

8 Commissioning 24
8.1 Function check 24
8.2 Sensor polarization 24
8.3 Sensor calibration 25

9 Troubleshooting 26

10 Maintenance 27
10.1 Maintenance schedule 27
10.2 Maintenance tasks 27
10.3 Clean sensor 28
10.4 Wear parts and consumables 28

11 Accessories 31
11.1 Assemblies (selection) 31
11.2 Measuring cable 31
11.3 Zero-point gel 32
11.4 Maintenance kit 32

12 Repair 33
12.1 Spare parts and consumables 33
12.2 Return 33
12.3 Disposal 33

13 Technical data 34

14 EC Declaration of Conformity 39

Index 40

1 Document information

1.1 Warnings

Structure of information	Meaning
DANGER **Causes (/consequences)** Consequences of non-compliance (if applicable) ▶ Corrective action	This symbol alerts you to a dangerous situation. Failure to avoid the dangerous situation **will** result in a fatal or serious injury.
WARNING **Causes (/consequences)** Consequences of non-compliance (if applicable) ▶ Corrective action	This symbol alerts you to a dangerous situation. Failure to avoid the dangerous situation **can** result in a fatal or serious injury.
CAUTION **Causes (/consequences)** Consequences of non-compliance (if applicable) ▶ Corrective action	This symbol alerts you to a dangerous situation. Failure to avoid this situation can result in minor or more serious injuries.
NOTICE **Cause/situation** Consequences of non-compliance (if applicable) ▶ Action/note	This symbol alerts you to situations which may result in damage to property.

1.2 Symbols

Symbol	Meaning
	Additional information, tips
	Permitted or recommended
	Not permitted or not recommended
	Reference to device documentation
	Reference to page
	Reference to graphic
	Result of a step

2 Basic safety instructions

2.1 Requirements for personnel

- Installation, commissioning, operation and maintenance of the measuring system may be carried out only by specially trained technical personnel.
- The technical personnel must be authorized by the plant operator to carry out the specified activities.
- The electrical connection may be performed only by an electrical technician.
- The technical personnel must have read and understood these Operating Instructions and must follow the instructions contained therein.
- Measuring point faults may be repaired only by authorized and specially trained personnel.

Repairs not described in the Operating Instructions provided may only be carried out directly by the manufacturer or by the service organization.

2.2 Designated use

The oxygen sensor is suitable for continuous measurement of dissolved oxygen in water.

The specific suitability depends on the sensor design:
- COS22D-*1 (standard, measuring range 0.01 to 60 mg/l)
  - Measuring, monitoring and regulating the oxygen content in fermenters
  - Monitoring the oxygen content in biotechnology facilities
- COS22D-*3/4 (trace measurement, measuring range 0.001 to 10 mg/l, preferred operational range 0.001 to 2 mg/l), also suitable for high CO_2 partial pressure
  - Monitoring inertization equipment in the food industry
  - Monitoring the residual oxygen content in carbonated fluids of the beverage industry
  - Trace measurement in industrial applications such as inertizations
  - Monitoring the residual oxygen content in boiler feedwater
  - Monitoring, measuring and regulating the oxygen content in chemical processes

NOTICE

Molecular hydrogen

Hydrogen causes sensitivity in other substances and leads to false low readings or, at the worst, total failure of the sensor.
- ▶ Only use the COS22D-*1/3 sensor in media free of hydrogen.
- ▶ Use the COS22D-*4 sensor in media containing hydrogen.

The COS22D sensor has to be connected with the CYK10 measuring cable for non-contact, digital data transmission to the digital input of the Liquiline transmitter.

Use of the device for any purpose other than that described, poses a threat to the safety of people and of the entire measuring system and is therefore not permitted.

The manufacturer is not liable for damage caused by improper or non-designated use.

2.3 Occupational safety

As the user, you are responsible for complying with the following safety conditions:
- Installation guidelines
- Local standards and regulations
- Regulations for explosion protection

Electromagnetic compatibility
- The product has been tested for electromagnetic compatibility in accordance with the applicable European standards for industrial applications.
- The electromagnetic compatibility indicated applies only to a product that has been connected in accordance with these Operating Instructions.

2.4 Operational safety

1. Before commissioning the entire measuring point, verify that all connections are correct. Ensure that electrical cables and hose connections are undamaged.
2. Do not operate damaged products, and safeguard them to ensure that they are not operated inadvertently. Label the damaged product as defective.
3. If faults cannot be rectified:
   Take the products out of operation and safeguard them to ensure that they are not operated inadvertently.

2.5 Product safety

2.5.1 State of the art

The product is designed to meet state-of-the-art safety requirements, has been tested, and left the factory in a condition in which it is safe to operate. The relevant regulations and European standards have been observed.

2.5.2 Electrical equipment in hazardous areas

ATEX II 1G / IECEx Ex ia IIC T3/T4/T6 Ga

The Memosens inductive sensor cable connection system, consisting of:

- Oxygen sensor Oxymax COS22D-BA***** and
- Measuring cable CYK10-G*1

is suitable for use in potentially explosive atmospheres according to type examination certificate BVS 04 ATEX E 121 X. The corresponding EC declaration of conformity is part of this document.

- The certified oxygen sensor Oxymax COS22D-BA***** may only be connected to certified, intrinsically safe, digital sensor circuits of the transmitter Liquiline M CM42-*E/F/G********* in conjunction with the measuring cable CYK10-G**1. The electrical connection must be made according to the wiring diagram.
- Oxygen sensors for use in the Ex area have a special conductive O-Ring. The electrical connection of the metallic sensor shaft to the conductive mounting location (e.g. a metallic assembly) takes place via the O-ring.
- You have to connect the assembly or the installation to ground according to the Ex guidelines.
- The sensors must not be operated under electrostatically critical process conditions. Avoid strong steam or dust currents that act directly on the connection system.
- Hazardous area versions of digital sensors with Memosens technology are marked by a red-orange ring on the plug-in head.
- The maximum permitted cable length between the sensor and transmitter is 100 m (330 ft).
- Full compliance with regulations for electrical systems in hazardous locations (EN/IEC 60079-14) is mandatory when using the devices and sensors.

NEPSI Ex ia IIC T3/T4/T6 Ga

The Memosens inductive sensor cable connection system, consisting of:

- Oxygen sensor Oxymax COS22D-NA****3 and
- measuring cable CYK10-G*1

is approved for use in explosive atmospheres in accordance with the **N**ational supervision and inspection centre for **E**xplosion protection and **S**afety of **I**nstrumentation (NEPSI) in China.

The certified oxygen sensor Oxymax COS22D-NA****3 may only be connected to the following certified, intrinsically safe, digital sensor circuits in conjunction with the measuring cable CYK10-G**1, or a Memosens cable with an identical structure both in terms of hardware and function:
– Liquiline CM42-OJ*
– Alternatively to an approved, intrinsically safe Memosens sensor output that supplies the following values at the very maximum:

Parameter set 1	Parameter set 2
U_0 = 5.1 V I_0 = 130 mA P_0 = 166 mW (linear output characteristic) C_i = 15 µF L_i = 95 µH	U_0 = 5.04 V I_0 = 80 mA P_0 = 112 mW (trapezoidal output characteristic) C_i = 14.1 µF L_i = 237.2 µH

- The electrical connection must be made according to the wiring diagram.
- Oxygen sensors for use in the Ex area have a special conductive O-Ring. The electrical connection of the metallic sensor shaft to the conductive mounting location (e.g. a metallic assembly) takes place via the O-ring.
- You have to connect the assembly or the installation to ground according to the Ex guidelines.
- If the CYK10-G cable is installed with its terminal head in Ex zone 0, the cable must be protected against electrostatic charge.
- The user may not change the configuration. Only in this way will the explosion protection of the unit remain intact. Every change puts safety at risk.
- The sensors must not be operated under electrostatically critical process conditions. Avoid strong steam or dust currents that act directly on the connection system. The metal sensor shaft must be installed at the mounting location in such a way that it is electrostatically conductive (< 1 MΩ).
- To mount, use and maintain the product, you must follow the information in the Operating Instructions and the following standards:
  – GB50257 -1996 "Code for construction and acceptance of electric device for explosion atmospheres and fire hazard electrical equipment installation engineering"
  – GB3836.13-1997 "Electrical apparatus for explosive gas atmospheres Part 13: Repair and overhaul for apparatus used in explosive gas atmospheres"
  – GB3836.15-2000 "Electrical apparatus for explosive gas atmospheres- Part 15: Electrical installations in hazardous area (other than mines)"
  – GB3836.16-2006 "Electrical apparatus for explosive gas atmospheres- Part 16: Inspection and maintenance of electrical installation (other than mines)"
- Hazardous area versions of digital sensors with Memosens technology are marked by a red-orange ring on the plug-in head.
- The maximum permitted cable length between the sensor and transmitter is 100 m (330 ft).

FM/CSA IS/NI Cl.1 Div.1 GP: A-D

Observe the documentation and the control drawings of the transmitter.

Temperature classes ATEX, IECEx, FM/CSA and NEPSI

	Temperature class		
	T3	T4	T6
Ambient temperature T_a	−5 to +135 °C	−5 to +120 °C	−5 to +70 °C
Reference temperature T_{ref}	+25 °C		

TIIS Ex ib IIC T4

The certified oxygen sensor Oxymax COS22D-TA****3 may only be connected to the certified, intrinsically safe, digital sensor circuit of the transmitter Liquiline M CM42-OT* in conjunction with the measuring cable CYK10-U*1.

Temperature classes TIIS

	T4
Ambient temperature T_a	−5 to +60 °C
Reference temperature T_{ref}	+25 °C

3 Device description, function

3.1 Amperometric measuring principle

The oxygen molecules that diffuse through the membrane are reduced at the cathode to hydroxide ions (OH-). At the anode, silver is oxidized to silver ions (Ag+) (this forms a silver halide layer). A current flows due to the electron donation at the cathode and the electron acceptance at the anode. Under constant conditions, this flow is proportional to the oxygen content of the medium. This current is converted in the transmitter and indicated on the display as an oxygen concentration in mg/l, µg/l, ppm, ppb or Vol%, as a saturation index in % SAT or as an oxygen partial pressure in hPa.

3.2 Sensor design

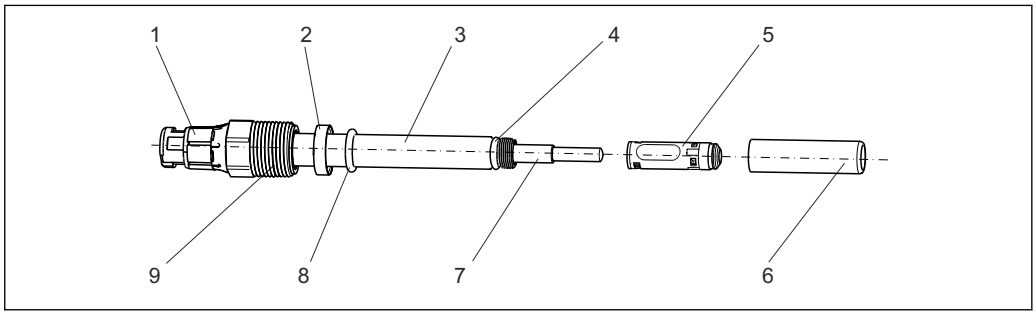

1 COS22D

1	*Plug-in head*	*4*	*O-ring 8.5 x 1.5 mm*	*7*	*Glass portion with anode and cathode*
2	*Thrust collar*	*5*	*Membrane body*	*8*	*Process seal 10.77 x 2.62 mm*
3	*Sensor shaft*	*6*	*Shaft sleeve*	*9*	*Process connection Pg 13.5*

3.3 Membrane body

The oxygen dissolved in the medium is transported to the membrane by the necessary flow. The membrane is permeable for dissolved gases only. Other substances dissolved in the liquid phase, e.g. ionic substances, will not penetrate through the membrane. Therefore, medium conductivity has no impact on the measuring signal.

The sensor is shipped with a standard membrane body, which can be used for all common applications. The membrane is pretensioned at the factory and can be installed immediately.

Electrolytes are version-specific and **cannot** be mixed in a single application!

3.4 Memosens technology

Sensors with Memosens protocol have an integrated electronics unit that stores calibration data and other information. Once the sensor has been connected, the sensor data are transferred automatically to the transmitter and used to calculate the measured value. You can call up the sensor data via the relevant DIAG menu.

Digital sensors can store measuring system data in the sensor. These include the following:
- Manufacturer data
  - Serial number
  - Order code
  - Date of manufacture
- Calibration data
  - Calibration date
  - Calibration values
  - Number of calibrations
  - Serial number of the transmitter used to perform the last calibration
- Operating data
  - Temperature application range
  - Date of initial commissioning
  - Hours of operation under extreme conditions
  - Number of sterilizations

3.5 Polarization

When the sensor is connected to the transmitter, a fixed voltage is applied between the cathode and anode. The polarization current this creates can be identified on the transmitter with a display that is initially high, but decreases with time. The sensor cannot be calibrated until the display is calibrated.

Reference value for nearly complete polarization of a sensor that was previously stored for a long time:
- COS22D-*1: 2 hours
- COS22D-*3/4: 12 hours

After this time, even measurements close to the determination limit are useful. The necessary polarization time is reduced for sensors that were in use a short time before.

4 Incoming acceptance and product identification

4.1 Incoming acceptance

1. Verify that the packaging is undamaged.
   ↳ Notify your supplier of any damage to the packaging.
   Keep the damaged packaging until the matter has been settled.
2. Verify that the contents are undamaged.
   ↳ Notify your supplier of any damage to the delivery contents.
   Keep the damaged products until the matter has been settled.
3. Check the delivery for completeness.
   ↳ Check it against the delivery papers and your order.
4. Pack the product for storage and transportation in such a way that it is protected against impact and moisture.
   ↳ The original packaging offers the best protection.
   The permitted ambient conditions must be observed (see "Technical data").

If you have any questions, please contact your supplier or your local sales center.

4.2 Product identification

4.2.1 Nameplate

The nameplate provides you with the following information on your device:
- Manufacturer identification
- Order code
- Extended order code
- Serial number
- Safety information and warnings

Compare the data on the nameplate with your order.

4.2.2 Product identification

Product page

www.endress.com/cos22d

Interpreting the order code

The order code and serial number of your product can be found in the following locations:
- On the nameplate
- In the delivery papers

Obtaining information on the product

1. Go to the product page for your product on the Internet.
2. In the navigation area on the right-hand side, select "Check your device features" under "Device support".
   ↳ An additional window opens.
3. Enter the order code from the nameplate into the search field.
   ↳ You will receive information on each feature (selected option) of the order code.

4.3 Scope of delivery

The scope of delivery comprises:

- Oxygen sensor with watering cap (filled with tap water) for protecting the membrane
- Electrolyte, 1 bottle, 10 ml (0.34 fl.oz.)
- Tool to push out the membrane body
- Brief Operating Instructions

4.4 Certificates and approvals

4.4.1 CE mark

Declaration of Conformity

The product meets the requirements of the harmonized European standards. As such, it complies with the legal specifications of the EC directives. The manufacturer confirms successful testing of the product by affixing to it the CE mark.

4.4.2 Ex approvals

Version COS22D-BA
ATEX II 1G / IECEx Ex ia IIC T3/T4/T6 Ga
FM/CSA IS/NI Cl.1 Div.1 GP: A-D

Version COS22D-NA
NEPSI Ex ia IIC T3/T4/T6 Ga

Version COS22D-TA
TIIS Ex ib IIC T4

4.4.3 Certification body

DEKRA EXAM GmbH
Bochum

4.4.4 Material certificates

Manufacturer declaration of FDA compatibility

The manufacturer declares the use of FDA-listed materials.
Ask your Sales Center for the certificates.

Product	FDA certificate for
COS22D-****22	Membrane, O-rings, process seal
COS22Z-*2*2	Membrane, O-rings, process seal
COS22D-****23	Membrane, O-rings
COS22Z-*2*3	Membrane, O-rings

Hazardous area versions

For operation in FDA processes, another FDA-approved seal must be installed before the process seal (e.g. CPA442). Doing so will sufficiently separate the process from the Ex connection.

Material test certificate

A test certificate 3.1 in accordance with EN10204 is supplied depending on the version (→ Product Configurator on the product page).

EHEDG

Compliance with EHEDG's criteria for hygienic design
- TÜV Rheinland, Apeldorn, Netherlands
- Certificate type: Type EL Class I

5 Installation

5.1 Installation conditions

5.1.1 Orientation

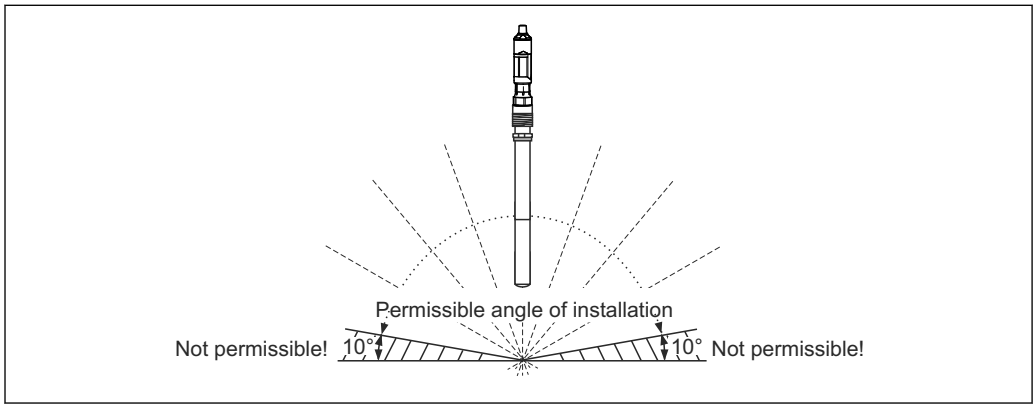

2 *Permitted orientations*

The sensor must be installed at an angle of inclination of 10 to 170 ° in an assembly, bracket or appropriate process connection. Recommended angle: 45°, to prevent the formation of air bubbles.

Inclination angles other than those mentioned are not permitted. Do **not** install the sensor overhead.

Observe the instructions for installing sensors in the Operating Instructions for the assembly used.

5.1.2 Mounting location

- Choose a mounting location that can be easily accessed at a later stage.
- Ensure that upright posts and fittings are fully secured and vibration-free.
- Select an installation location which produces a typical oxygen concentration for the individual application.

5.2 Mounting the sensor

5.2.1 Measuring system

A complete measuring system comprises:
- An Oxymax COS22D oxygen sensor
- Measuring cable CYK10
- A transmitter, e.g. Liquiline CM42
- Optional: an assembly, e.g. permanent installation assembly CPA442, flow assembly CPA240, or retractable assembly CPA875

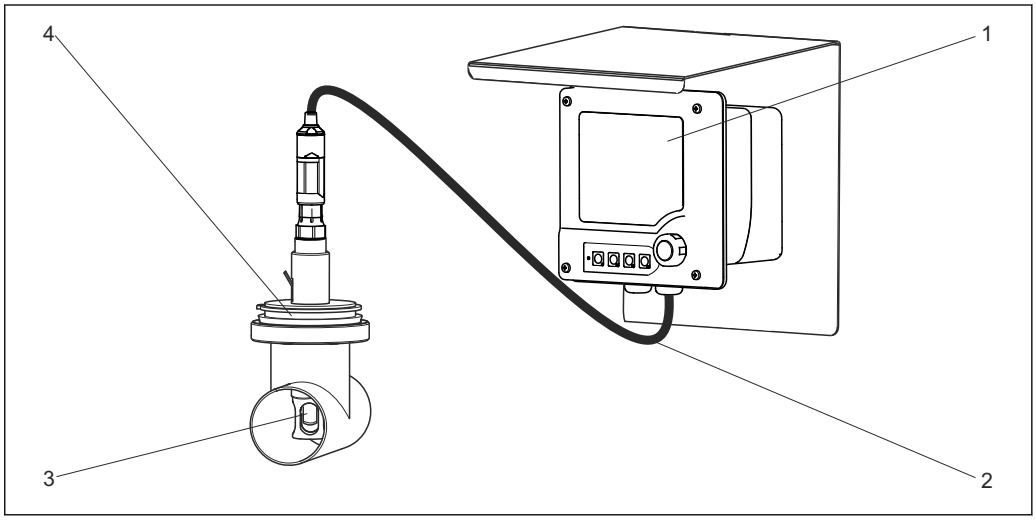

3 *Example of a measuring system with COS22D-*1*

1 *Liquiline CM42*
2 *Measuring cable CYK10*
3 *Digital oxygen sensor Oxymax COS22D-*1*
4 *Permanent installation assembly CPA442*

5.2.2 Installing a measuring point

Installation in suitable assembly is required (depending on the application)

⚠ WARNING

Electrical voltage

In the event of a fault, non-grounded metallic assemblies may be under voltage and then are not touchable.

▶ When using metallic assemblies and installation equipment, observe the national grounding provisions.

For a complete installation of a measuring point, proceed as follows:

1. Install a retractable or a flow assembly (if used) into the process.
2. Connect the water supply to the rinse connections (if you use an assembly with cleaning function).
3. Install and connect the oxygen sensor.

NOTICE

Installation error

Cable open circuit, loss of sensor due to cable separation, unscrewing of membrane cap

- Do not install the sensor suspended from the cable.
- Screw the sensor into the assembly so that the cable is not twisted.
- When installing or uninstalling the sensor body, hold it tightly. Turn **using only the hexagonal nut** on the armored coupling. Otherwise you might unscrew the membrane cap. This will then remain in the assembly or process.
- Avoid exerting excessive tensile force on the cable (e.g. from jerky pulling).
- Select an installation location that is easy to access for later calibrations.

5.3 Installation examples

5.3.1 Permanent installation (CPA442)

The permanent installation assembly CPA442 enables easy adaptation of a sensor to nearly any process connections from Ingold nozzles to Varivent or Tri-Clamp connections. This kind of installation is very well suited for tanks and larger pipes. You will achieve a defined immersion depth of the sensor into the medium in the simplest way.

5.3.2 Flow assembly

CPA240

The flow assembly CPA240 offers up to three installation spaces for sensors with a shaft diameter of 12 mm (0.47"), a shaft length of 120 mm (4.7"), and a Pg 13.5 process connection. It very well suited for use in pipelines or hose connections. To prevent measured error with trace measurements, pay particular attention to complete ventilation of the assembly.

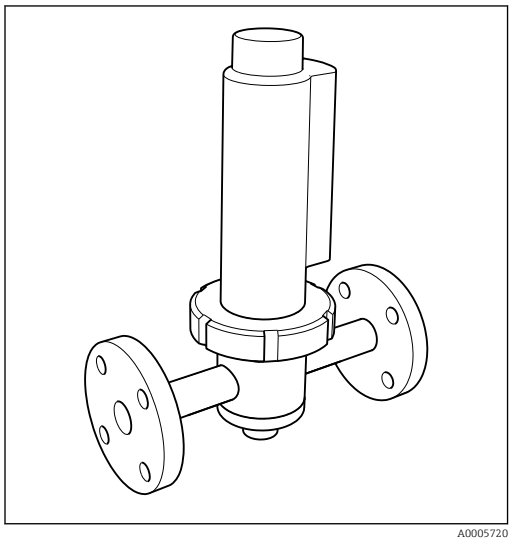

4 Flow assembly CPA240 with protective cover

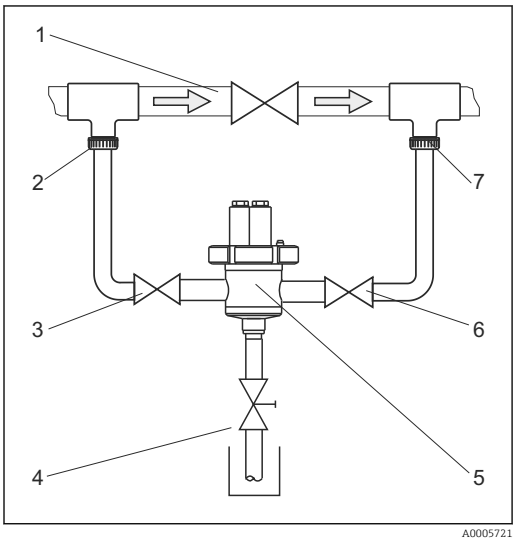

5 Bypass installation

1 Main pipe
2 Medium removal
3, 6 Manually actuated or solenoid valves
4 Sampling
5 Flow assembly with installed sensor
7 Medium return

Flow assembly for water treatment and processes

The compact stainless steel assembly offers space for a 12-mm sensor with a length of 120 mm. The assembly has a low sampling volume and, with the 6-mm connections, it is best suited for residual oxygen measurement in water treatments and boiler feedwater. The flow comes from below.

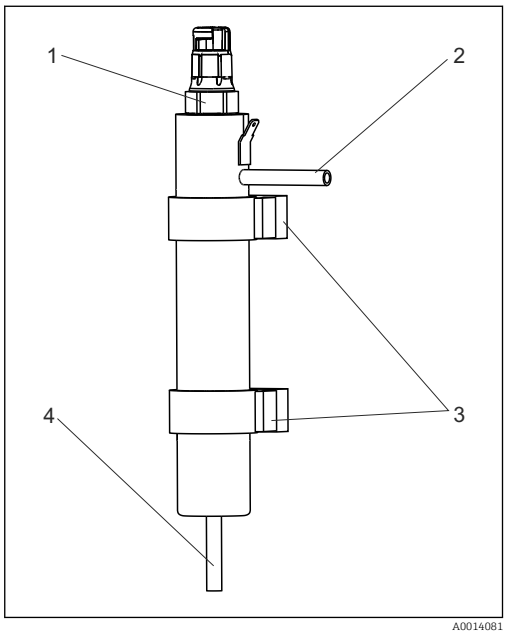

6 *Flow assembly*

1 *Built-in sensor*
2 *Drain*
3 *Wall mount (clamp D29)*
4 *Inflow*

5.3.3 Retractable assembly (CPA875 or CPA450)

The assembly is designed for installation on tanks and pipes. Suitable nozzles must be available for this.

Install the assembly at places with constant flow. The minimum pipe diameter is DN 80 (3").

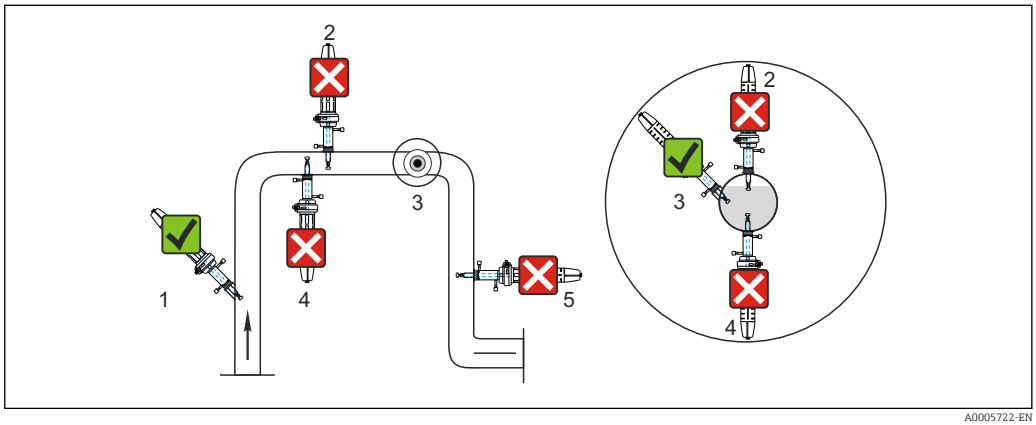

7 *Permissible and impermissible sensor installation positions with retractable assembly*

1 *Ascending pipe, best position*
2 *Horizontal pipe, sensor top down, impermissible due to air cushion or foam bubble forming*
3 *Horizontal pipe, lateral installation with permissible installation angle (acc. to sensor version)*
4 *Down pipe, impermissible*

NOTICE

Sensor not in the medium all the way, buildup, overhead installation

Results in incorrect measurements

- ▶ Do not install the assembly at places where air cushions or foam bubbles can be formed.
- ▶ Avoid deposits on the sensor membrane, or remove them regularly.
- ▶ Do not install the sensor overhead.

5.4 Post-installation check

- Are the sensor and cable undamaged?
- Is the orientation correct?
- Is the sensor installed in an assembly and is not suspended from the cable?
- Avoid the penetration of moisture by fitting the protective cap to the immersion assembly.

6 Electrical connection

⚠ WARNING

Device is live

Incorrect connection may result in injury or death.

- The electrical connection may be performed only by an electrical technician.
- The electrical technician must have read and understood these Operating Instructions and must follow the instructions contained therein.
- **Prior** to commencing connection work, ensure that no voltage is present on any cable.

6.1 Connection guide (COS22D-BA/NA only)

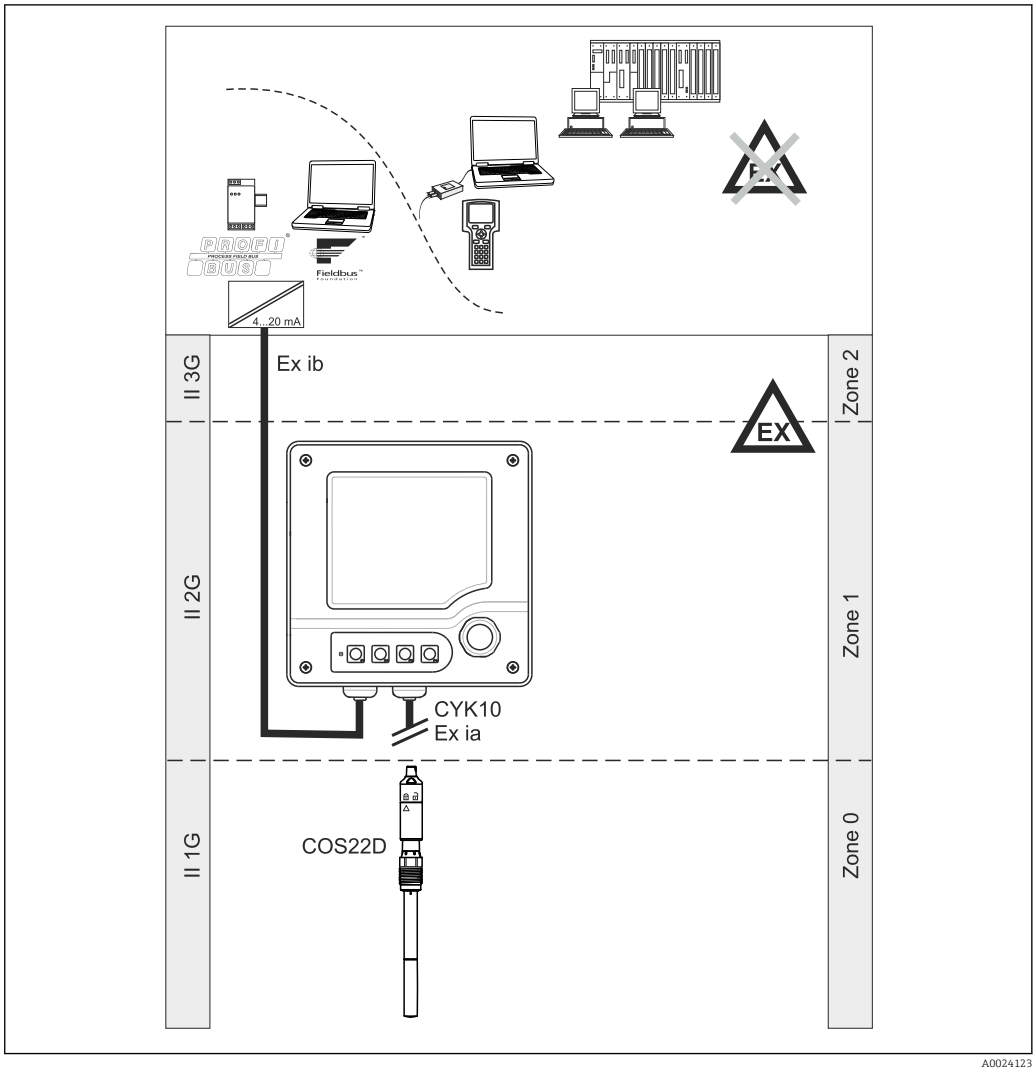

8

6.2 Connecting the sensor

The electrical connection of the sensor to the transmitter is performed using the measuring cable CYK10.

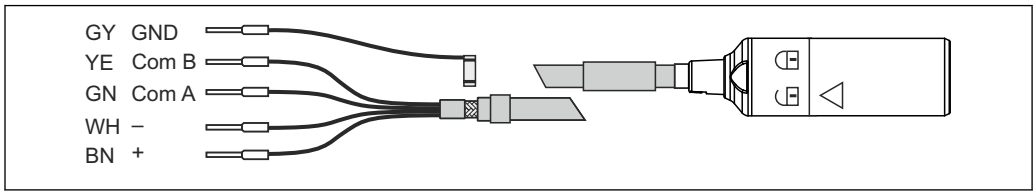

9 Measuring cable CYK10

6.3 Ensuring the degree of protection

Only the mechanical and electrical connections which are described in these instructions and which are necessary for the required, designated use, may be carried out on the device delivered.

► Exercise care when carrying out the work.

Otherwise, the individual types of protection (Ingress Protection (IP), electrical safety, EMC interference immunity) agreed for this product can no longer be guaranteed due, for example, to covers being left off or cable (ends) which are loose or insufficiently secured.

6.4 Post-connection check

Device condition and specifications	**Notes**
Are the outside of the sensor, assembly, cable undamaged?	Visual inspection
Electrical connection	**Notes**
Are the installed cables strain-relieved and not twisted?	
Is a sufficient length of the cable cores stripped, and is it positioned in the terminal correctly?	Check the fit (by pulling gently)
Are all the screws terminals properly tightened?	Tighten
Are all cable entries mounted, tightened and leak-tight?	For lateral cable entries, make sure the cables loop downwards to allow water to drip off
Are all cable entries installed downwards or mounted laterally?	

7 Calibration and adjustment

Calibration is a means of adapting the transmitter to the characteristic values of the sensor.

Calibration of the sensor is required after:
- Initial commissioning
- Changing the membrane or electrolyte
- Long pauses in operation without power supply

Within the framework of system monitoring and supervision, for example, the calibration can also be cyclically monitored (at typical time intervals, depending on operating experience) or renewed.

7.1 Types of calibration

You can carry out a slope or zero point calibration for the sensor.

In most applications, single-point calibration in the presence of oxygen is sufficient (=calibration of the sensor slope). When switching from process to calibration conditions, you have to allow a longer settling time for the sensor.

The additional calibration of the zero point improves the accuracy of the measurement results at trace concentrations. You can calibrate the zero point using nitrogen (min. 99.995%) or oxygen-free water. Make sure that the sensor is polarized and the measured value is settled at the zero point (at least 20-30 minutes) to prevent later incorrect measurements at trace concentrations.

The following describes calibration of the slope in air (saturated with water vapor) as the easiest and recommended calibration method. However, this type of calibration is possible only if the air temperature is ≥ 0 °C (32 °F).

7.2 Calibration in air

1. Remove the sensor from the medium.
2. Clean the outside of the sensor with a damp cloth.
3. Allow approx. 20 minutes for the sensor temperature to adapt to the ambient air. Make sure that the sensor is not exposed to any direct ambient influences (direct sunlight, drafts) during this time.
4. When the measured value display on the transmitter is stable, carry out the calibration according to the operating instructions for the transmitter. Pay particular attention to the software settings for the stability criteria for calibration.
5. Where necessary:
   Adjust the sensor.
6. Then insert the sensor into the medium.

Make sure you comply with the instructions for calibration in the Operating Instructions of the transmitter.

7.3 Calculation example for the calibration value

As a check, you can calculate the expected calibration value (transmitter display) as shown in the following example (salinity is 0).

1. Determine:
   - the sensor temperature (air temperature for the calibration type "air", water temperature for the calibration type "air-saturated water")
   - the altitude above sea level
   - the current air pressure (= rel. air pressure to sea level) at the time of calibration. (If undeterminable, use 1013 hPa (407 in H_2O)).
2. Define:
   - the saturation value S acc. to Table 1
   - the altitude factor K acc. to Table 2

Table 1

T [°C (°F)]	S [mg/l=ppm]	T [°C (°F)]	S [mg/l=ppm]	T [°C (°F)]	S [mg/l=ppm]	T [°C (°F)]	S [mg/l=ppm]
0 (32)	14.64	11 (52)	10.99	21 (70)	8.90	31 (88)	7.42
1 (34)	14.23	12 (54)	10.75	22 (72)	8.73	32 (90)	7.30
2 (36)	13.83	13 (55)	10.51	23 (73)	8.57	33 (91)	7.18
3 (37)	13.45	14 (57)	10.28	24 (75)	8.41	34 (93)	7.06
4 (39)	13.09	15 (59)	10.06	25 (77)	8.25	35 (95)	6.94
5 (41)	12.75	16 (61)	9.85	26 (79)	8.11	36 (97)	6.83
6 (43)	12.42	17 (63)	9.64	27 (81)	7.96	37 (99)	6.72
7 (45)	12.11	18 (64)	9.45	28 (82)	7.82	38 (100)	6.61
8 (46)	11.81	19 (66)	9.26	29 (84)	7.69	39 (102)	6.51
9 (48)	11.53	20 (68)	9.08	30 (86)	7.55	40 (104)	6.41
10 (50)	11.25						

Table 2

Altitude [m (ft)]	K	Height [m (ft)]	K	Height [m (ft)]	K	Height [m (ft)]	K
0 (0)	1.000	550 (1800)	0.938	1050 (3450)	0.885	1550 (5090)	0.834
50 (160)	0.994	600 (1980)	0.932	1100 (3610)	0.879	1600 (5250)	0.830
100 (330)	0.988	650 (2130)	0.927	1150 (3770)	0.874	1650 (5410)	0.825
150 (490)	0.982	700 (2300)	0.922	1200 (3940)	0.869	1700 (5580)	0.820
200 (660)	0.977	750 (2460)	0.916	1250 (4100)	0.864	1750 (5740)	0.815
250 (820)	0.971	800 (2620)	0.911	1300 (4270)	0.859	1800 (5910)	0.810
300 (980)	0.966	850 (2790)	0.905	1350 (4430)	0.854	1850 (6070)	0.805
350 (1150)	0.960	900 (2950)	0.900	1400 (4600)	0.849	1900 (6230)	0.801
400 (1320)	0.954	950 (3120)	0.895	1450 (4760)	0.844	1950 (6400)	0.796
450 (1480)	0.949	1000 (3300)	0.890	1500 (4920)	0.839	2000 (6560)	0.792
500 (1650)	0.943						

3. Calculate the factor **L:**

$$L = \frac{\text{Relative air pressure at calibration}}{1013\ \text{hPa}}$$

4. Calculate the calibration value **C:**

$$C = S \cdot K \cdot L$$

Example
- Air calibration at 18 °C (64 °F), altitude 500 m (1650 ft) above sea level, current air pressure 1009 hPa (405 in H_2O)
- S = 9.45 mg/l, K = 0.943, L = 0.996
- Calibration value C = 8.88 mg/l.

You do not need factor K in the table if your measuring device returns the absolute air pressure L_{abs} (air pressure depending on altitude) as the measured value. The formula for calculation is then: $C = S \cdot L_{abs}$.

7.4 Zero point calibration

The zero point is not so important when working with relatively high concentrations of oxygen.

This situation changes, however, once oxygen sensors are used at low concentrations and in the trace range and where they are also to be calibrated in the zero point. Zero point calibrations are demanding as the ambient medium - usually air - already has a high oxygen content. This oxygen must be blocked off for zero-point calibration of the sensor.

Calibration with zero-point gel can be used here:
The oxygen-depleting gel COY8 (→ 32) creates an oxygen-free medium for zero point calibration.

Prior to sensor zero point calibration, check:
- Is the sensor signal stable?
- Is the value displayed plausible?

1. If the sensor signal is stable:
   Calibrate the zero point.
2. If necessary:
   Adjust the sensor to the zero point.

The reference method (sample calibration in zero point) can also be used here if appropriate collecting vessels or reference measurement are available.

If the oxygen sensor is calibrated too early, this can result in an incorrect zero point.

Rule of thumb: Operate the sensor in zero-point gel for at least 0.5 h.

If the sensor was already operated in the trace range before the zero point calibration, the time specified above generally suffices. If the sensor was operated in air, significantly more time must be factored in to also remove residual oxygen from any dead volume inherent to the design. Here a value of 2 hours applies as a general rule.

8 Commissioning

8.1 Function check

Before first commissioning, check if:
- the sensor is correctly installed
- the electrical connection is correct.

If using an assembly with automatic cleaning, check that the cleaning medium (e.g. water or air) is connected correctly.

⚠ WARNING

Escaping process medium

Risk of injury from high pressure, high temperatures or chemical hazards
- ▶ Before applying compressed air to an assembly with cleaning facility, make sure the connections are correctly fitted.
- ▶ Do not install the assembly in the process if you cannot make the correct connection reliably.

8.2 Sensor polarization

NOTICE

Incorrect measurements due to ambient influences
- ▶ Be absolutely certain to avoid direct sunlight on the sensor.
- ▶ Make sure you comply with the instructions for commissioning in the Operating Instructions of the transmitter.

The sensor has been tested at the factory for proper function and is shipped in ready-to-operate condition.

To prepare for the calibration, carry out the following steps:

1. Pull off the sensor protection cap.
2. Expose the sensor, which should be dry on the outside, to the air atmosphere.
   ↳ The air should be saturated with water vapor. Therefore, install the sensor as close as possible to a surface of water. However, the sensor membrane must remain dry during calibration. Therefore, avoid direct contact with the surface of water.
3. Connect the sensor to the transmitter.
4. Switch on the transmitter.
   ↳ When the sensor is connected to the transmitter, the polarization takes place automatically after the power-up of the transmitter.
5. Wait for the polarization time to run out.

8.3 Sensor calibration

Calibrate the sensor (e.g. air calibration) immediately after the polarization time runs out.

The calibration intervals depend greatly on:
- The application
- The installation position of the sensor

The following method helps you determine the necessary calibration intervals:

1. Inspect the sensor one month after commissioning. Take it out of the medium and dry it.
2. After 10 minutes, measure the oxygen saturation index in air.
   ↳ Decide depending on the result: If the measured value is not 100 ±2 %SAT, you must calibrate the sensor. Otherwise, double the length of time to the next inspection.
3. Proceed as per Point 1 after two, four and/or eight months. In this way, you can determine the optimum calibration interval for your sensor.

In any case, calibrate the sensor at least once a year.

9 Troubleshooting

If one of the following problems is present, check the measuring system in the sequence listed here.

Problem	Testing	Remedial action
No display, no sensor reaction	Power supply to the transmitter?	Connect the power supply
	Sensor cable connected correctly?	Set up correct connection.
	Medium flow present?	Create medium flow
	Coating on the membrane?	Clean sensor
	No electrolyte in the measuring chamber?	Refill or change electrolyte
Displayed value too high	Polarization ended?	Wait for polarization time to finish
	Is sensor calibrated/adjusted?	recalibrate/readjust
	Displayed temperature clearly too low?	Check sensor, if necessary send sensor in for repair.
	Membrane visibly stretched?	Replacing the membrane cap
	Electrolyte dirty?	Electrolyte replacement
	Open the sensor and dry the electrode. Is the transmitter display now at 0?	Check the cable connection. If the problem persists, send in the sensor.
Displayed value too low	Is sensor calibrated/adjusted?	recalibrate/readjust
	Medium flow present?	Create medium flow
	Displayed temperature clearly too high?	Check sensor, if necessary send sensor in for repair.
	Coating on the membrane?	Clean sensor
	Electrolyte dirty?	Electrolyte replacement
Display value fluctuating greatly	Membrane visibly stretched?	Replacing the membrane cap
	Open the sensor and dry the electrode. Is the transmitter display now at 0?	Check the cable connection. If the problem persists, send in the sensor.

Please observe the troubleshooting information in the Operating Instructions for the transmitter. If need be, carry out a test on the transmitter.

10 Maintenance

Take all the necessary precautions in time to ensure the operational safety and reliability of the entire measuring system.

NOTICE

Effects on process and process control

- When carrying out any work on the system, take into account possible repercussions for process control or the process itself.
- For your own safety, only use genuine accessories. With genuine parts, the function, accuracy and reliability are also ensured after maintenance work.

10.1 Maintenance schedule

Maintenance cycles depend to a great extent on the operating conditions.

The following rule of thumb applies:
- Constant conditions, e.g. power plant = long cycles (1/2 year)
- Greatly varying conditions, e.g. daily CIP cleaning = short cycles (1 month or shorter)

The following method helps you determine the necessary intervals:

1. Inspect the sensor one month after commissioning. Take it out of the medium and dry it.
2. After 10 minutes, measure the oxygen saturation index in air.
   ↳ Decide depending on the result: If the measured value is not 100 ±2 %SAT, you must maintain the sensor. Otherwise, double the length of time to the next inspection.
3. Proceed as per Point 1 after two, four and/or eight months. In this way, you can determine the optimum maintenance interval for your sensor.

Particularly in the case of widely fluctuating process conditions, damage may occur to the membrane even within a maintenance cycle. You can recognize this by implausible sensor behavior.

10.2 Maintenance tasks

The following tasks are mandatory:
- Clean the sensor and the glass body with anode and cathode (particularly if membrane is dirty)
- Replacement of wear parts or consumables:
  – Electrolyte
  – Membrane body
  –
  – Sealing ring
- Check the measuring function:
  1. Remove the sensor from the medium.
  2. Clean and dry the membrane.
  3. After about 10 minutes, measure the oxygen saturation index in air (without recalibration).
  4. The measured value should be 100 ± 2 % SAT.
- Recalibration (if desired or required)

10.3 Clean sensor

The measurement can be corrupted by sensor fouling or malfunction, e.g.:
- Buildup on the sensor membrane
- ↳ causes longer response times and a reduced slope under certain circumstances.

For reliable measurement, the sensor must be cleaned at regular intervals. The frequency and intensity of the cleaning operation depend on the measuring medium.

Clean the sensor:
- before every calibration
- at regular intervals during operation as necessary
- before returning it for repairs.

Type of soiling	Cleaning
Salt deposits	Immerse the sensor in drinking water or in 1-5% hydrochloric acid (for a few minutes). Afterwards, rinse it with copious amounts of water.
Dirt particles on the sensor shaft and shaft sleeve (**not membrane!**)	Clean the sensor shaft and sleeve with water and a suitable brush.
Dirt particles on the membrane or membrane body	Clean the membrane with water and a soft sponge.

After cleaning, rinse the sensor with copious amounts of clean water.

10.4 Wear parts and consumables

Parts of the sensor are subject to wear during operation. By taking suitable measures, you can restore the normal operating function.

Measure	Reason
Sealing ring replacement	Visible damage to a sealing ring
Electrolyte replacement	Unstable or implausible measuring signal or fouling of the electrolyte
Membrane body replacement	Membrane is damaged or can no longer be cleaned (hole or overstretching)

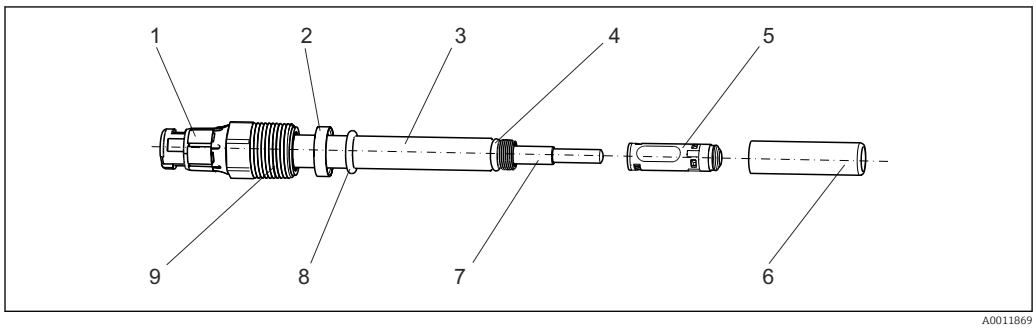

10 COS22D

1	*Plug-in head*	*4*	*O-ring 8.5 x 1.5 mm*	*7*	*Glass portion with anode and cathode*
2	*Thrust collar*	*5*	*Membrane body*	*8*	*Process seal 10.77 x 2.62 mm*
3	*Sensor shaft*	*6*	*Shaft sleeve*	*9*	*Process connection Pg 13.5*

10.4.1 Replacing sealing rings

The sealing ring must be replaced if visibly damaged. For replacement, use only original sealing rings.

The following O-rings can be replaced:
- Sealing ring for shaft sleeve: item 4 → 28
- Sealing ring for process (conductive for Ex): item 8

If the sealing ring on the membrane body (item 5) is damaged, you must replace the entire membrane body.

10.4.2 Replacing electrolyte

The electrolyte is used up slowly during operation. This is caused by electrochemical substance reactions. In de-energized state, no substance reactions take place, and the electrolyte is not used up. The operating time of the electrolyte is shortened by diffusion of dissolved gases such as H_2S, NH_3 or high concentrations of CO_2.

Theoretical operating time at p_{O2} = 210 mbar and T=25 °C (77 °F)

COS22D-*1 (standard sensor):	> 1.5 years
COS22D-*3/4 (trace sensor):	> 3 months

⚠ CAUTION

The standard electrolyte is a strong irritant

Danger of severe skin and eye irritation
- ▶ Be absolutely certain to observe the corresponding workplace safety regulations.
- ▶ Wear protective clothing, gloves and goggles when handling the electrolyte.
- ▶ In case of eye contact: Remove contact lenses, flush eyes with water for a few minutes and contact a doctor.
- ▶ In case of skin contact: Take off wet clothing immediately, wash the skin or take a shower.

Generally, the following applies:
- Changing the electrolyte is mandatory if the membrane body is detached.
- Sensors operated close to the zero point consume hardly any chemical electrolyte. The electrolyte does not have to be replaced for a long period.
- Sensors operated at high partial oxygen pressures (> 100 hPa) consume a significant amount of electrolyte. The electrolyte has to be replaced frequently.
- 25 ml electrolyte are enough to fill the membrane body approx. 15 times.

Draining the electrolyte

1. Remove the sensor from the medium.
2. Clean the outside of the sensor.
3. Hold the sensor vertically and unscrew the shaft sleeve.
   ↳ The membrane body is either in the shaft sleeve or is still on the glass portion with the anode and cathode.
4. Remove the membrane body. For this purpose, use the tool provided to push out the membrane body.
5. Drain the membrane body and flush it with potable water.

Top up the electrolyte and install the membrane body

1. Fill fresh electrolyte from the supply bottle into the membrane body.
2. Remove all air bubbles from the electrolyte by tapping the side of the membrane body (using a pen or pencil, for example).
3. Hold the sensor vertically and carefully push the membrane body, filled with electrolyte, on the glass portion.

4. Carefully screw on the shaft sleeve as far as it will go.

After replacing, the sensor must be repolarized and recalibrated. Then insert the sensor into the medium and check that no alarm is displayed on the transmitter.

10.4.3 Replacing membrane body

Removing the membrane body

1. Remove the sensor from the medium.
2. Clean the outside of the sensor.
3. Hold the sensor vertically and unscrew the shaft sleeve.
   ↳ The membrane body is either in the shaft sleeve or is still on the glass portion with the anode and cathode.
4. Remove the membrane body. For this purpose, use the tool provided to push out the membrane body.
5. Dispose of the old membrane body and the old electrolyte.
6. Take a **new** membrane body out of its packaging.

Top up the electrolyte and install the membrane body

1. Fill fresh electrolyte from the supply bottle into the membrane body.
2. Remove all air bubbles from the electrolyte by tapping the side of the membrane body (using a pen or pencil, for example).
3. Hold the sensor vertically and carefully push the membrane body, filled with electrolyte, on the glass portion.
4. Carefully screw on the shaft sleeve as far as it will go.

After replacing, the sensor must be repolarized and recalibrated. Then insert the sensor into the medium and check that no alarm is displayed on the transmitter.

10.4.4 Replacing glass body with cathode

NOTICE

Polishing the cathode can cause impaired function or total failure of the sensor.

▶ Do not clean the cathode mechanically.

If the cathode is coated, replace the glass body:

1. Hold the sensor vertically and unscrew the shaft sleeve: item 6 .
2. If the membrane body (item 5) remains on the glass body (item 7) and not in the shaft sleeve, remove it from the glass body.
3. Flush the glass body, along with the anode and cathode, using distilled water.
4. Pull the used glass body out of the holder.
5. Dry the inside of the electrode holder.
6. Plug a new glass body (from the membrane kit) into the holder so that it fits. Ensure that you do not damage the electrical contact pins.
7. Fill the membrane body with electrolyte then screw the shaft sleeve back on.

11 Accessories

The following are the most important accessories available at the time this documentation was issued. For accessories not listed here, please contact your service or sales office.

11.1 Assemblies (selection)

Cleanfit CPA875
- Retractable process assembly for sterile and hygienic applications
- For in-line measurement with standard 12 mm sensors for parameters such as pH, ORP and oxygen
- Product Configurator on the product page: www.endress.com/cpa875

Technical Information TI01168C

Flowfit CPA240
- pH/redox flow assembly for processes with stringent requirements
- Product Configurator on the product page: www.endress.com/cpa240

Technical Information TI00179C

Unifit CPA442
- Installation assembly for food, biotechnology and pharmaceutics
- With EHEDG and 3A certificate
- Product Configurator on the product page: www.endress.com/cpa442

Technical Information TI00306C

Cleanfit CPA450
- Manual retractable assembly for installing 120 mm sensors in tanks and pipes
- Product Configurator on the product page: www.endress.com/cpa450

Technical Information TI00183C

Flow assembly
- For sensors with Ø 12 mm and length 120 mm
- Compact stainless steel assembly with low sampling volume
- Order No. Order No.: 71042404

11.2 Measuring cable

11.2.1 Cable for COS22D

CYK10 Memosens data cable
- For digital sensors with Memosens technology
- Product Configurator on the product page: www.endress.com/cyk10

Technical Information TI00118C

Memosens data cable CYK11
- Extension cable for digital sensors with Memosens protocol
- Product Configurator on the product page: www.endress.com/cyk11

Technical Information TI00118C

11.3 Zero-point gel

COY8

Zero-point gel for oxygen sensors
- Oxygen-depleting gel for test purposes
- Product Configurator on the product page: www.endress.com/coy8

Technical Information TI01244C

11.4 Maintenance kit

COS22Z
- Service Kit, COS22 and COS22D
- Ordering information: www.endress.com/cos22d under "Accessories/spare parts"

12 Repair

12.1 Spare parts and consumables

COS22Z
- Service Kit, COS22 and COS22D
- Ordering information: www.endress.com/cos22d under "Accessories/spare parts"

12.2 Return

The product must be returned if repairs or a factory calibration are required, or if the wrong product was ordered or delivered. As an ISO-certified company and also due to legal regulations, Endress+Hauser is obliged to follow certain procedures when handling any returned products that have been in contact with medium.

To ensure swift, safe and professional device returns, please read the return procedures and conditions at www.endress.com/support/return-material.

12.3 Disposal

The device contains electronic components and must therefore be disposed of in accordance with regulations on the disposal of electronic waste.

Observe the local regulations.

13 Technical data

13.1 Input

Measured values

Dissolved oxygen [mg/l, µg/l, ppm, ppb or % SAT or hPa]

Temperature [°C, °F]

Measuring ranges

Measuring ranges apply for 20 ° (68 °F) and 1013 hPa (15 psi)

	Measuring range	**Optimum operational range** [1]
COS22D-*1	0.01 to 60 mg/l 0 to 600 % SAT 0 to 1200 hPa (0 to 6 psi) 0 to 100 Vol%	0.01 to 20 mg/l 0 to 200 % SAT 0 to 400 hPa (0 to 6 psi) 0 to 40 Vol%
COS22D-*3/4	0.001 to 10 mg/l 0 to 120 % SAT 0 to 250 hPa (0 to 6 psi) 0 to 25 Vol%	0.001 to 2 mg/l 0 to 20 % SAT 0 to 40 hPa (0 to 6 psi) 0 to 4 Vol%

1) Applications in this range guarantee a long service life and minimum maintenance

13.2 Performance characteristics

Response time

From air to nitrogen at reference operating conditions:
- t_{90} : < 30 s
- t_{98} : < 60 s

reference operating conditions

Reference temperature: 25 °C (77 °F)
Reference pressure: 1013 hPa (15 psi)
Reference application: Air-saturated water

Signal current in air

COS22D-*1 (standard sensor): 40 to 100 nA
COS22D-*3/4 (trace sensor): 210 to 451 nA

Zero current

COS22D-*1 (standard sensor): < 0.1 % of the signal current in air
COS22D-*3/4 (trace sensor): < 0.03 % of the signal current in air

Measured value resolution

COS22D-*1 (standard sensor): 10 ppb in aqueous, 0.2 hPa or 0.02 Vol% in gaseous media
COS22D-*3/4 (trace sensor): 1 ppb in aqueous, 0.02 hPa or 0.002 Vol% in gaseous media

Corresponds to the recommended measured value resolution at the transmitter

Maximum measured error

COS22D-*1 (standard sensor): ≤ ±1 % of measuring range + 10 ppb *
COS22D-*3/4 (trace sensor): ≤ ±1 % of measuring range + 1 ppb *

* at reference operating conditions

Long-term drift	< 4 % per month in reference operating conditions ≤ 1 % per month in operation with reduced oxygen concentration (< 4 Vol% O_2)	
Influence of the medium pressure	Pressure compensation not required	
Polarization time	COS22D-*1 (standard sensor):	< 30 min for 98% signal value, 2 h for 100%
	COS22D-*3/4 (trace sensor):	< 3 h for 98% signal value, 12 h for 100%
Intrinsic oxygen consumption	COS22D-*1 (standard sensor):	Approx. 20 ng/h in air at 25 °C (77 °F)
	COS22D-*3/4 (trace sensor):	Approx. 100 ng/h in air at 25 °C (77 °F
Operating time of the electrolyte	→ 📄 29	
Temperature compensation	**COS22D** Compensation of the membrane properties takes place in the transmitter between -5 and 90 °C (23 to 194 °F); above 90 °C (194 °F), extrapolation takes place ▪ Measured variable as partial pressure [hPa] or in Vol%: -5 to 90 °C (23 to 194 °F) ▪ Measured variable as concentration [mg/l]: 0 to 80 °C (32 to 176 °F) ▪ Measured variable as saturation [%SAT]: -5 to 90 °C (23 to 194 °F)	

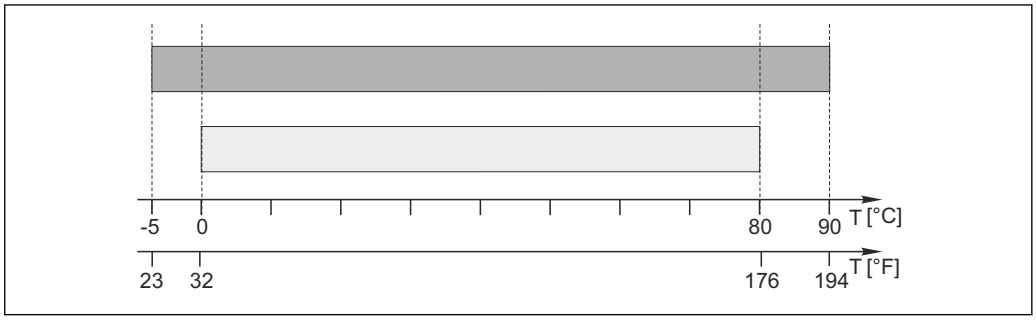

A0011887

13.3 Environment

Ambient temperature range	COS22D-*1 /3:	-5 to +135 °C (23 to 275 °F), non-freezing
	COS22D-*4:	-5 to +50 °C (23 to 120 °F), non-freezing
Storage temperature	−5 to +50 °C (20 to 120 °F) at 95% relative humidity, non-condensing **NOTICE** **Danger of sensor drying out** ▶ Store the sensor with the watering cap only (filled with tap water).	
Degree of protection	IP 68 (10 m (33 ft) head of water at 25 °C (77 °F) over 45 days, 1 mol/l KCl)	
Humidity	0 to 100%, condensating	

13.4 Process

Process temperature	COS22D-*1 /3: COS22D-*4:	-5 to +135 °C (23 to 275 °F), non-freezing -5 to +80 °C (23 to 180 °F), non-freezing
Process pressure	Ambient pressure ... 12 bar (... 174 psi) absolute	
Temperature-pressure ratings	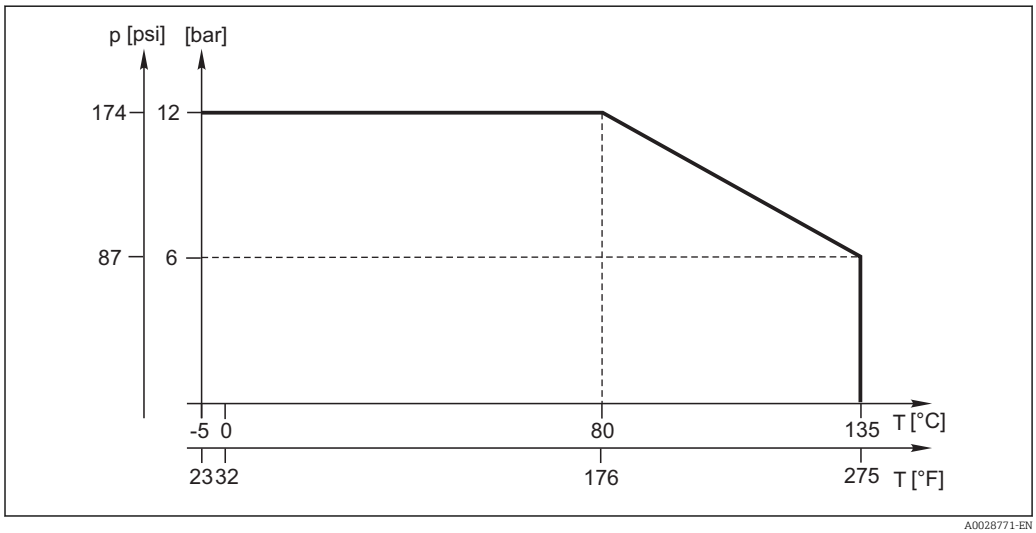	
Minimum flow	COS22D-*1 (standard sensor): COS22D-*3/4 (trace sensor):	0.02 m/s (0.07 ft/s) 0.1 m/s (0.33 ft/s)
Chemical resistance	Parts in contact with the medium are chemically resistant to: ▪ Diluted acids and alkalis ▪ Hot water and superheated steam up to max. 135 °C (275 °F) ▪ CO_2 up to 100 %, only with trace sensor COS22D-*3 **NOTICE** **Hydrogen sulfide and ammonia shorten the operating life of the sensor.** ► Do not use the sensor in applications where it is exposed to hydrogen sulfide or ammonia vapors.	
Cross-sensitivity	COS22D-*1/3 Molecular hydrogen causes false low readings and can, in a worst-case scenario, result in total failure of the sensor. No cross interference from hydrogen with the COS22D-*4 version.	
CIP compatibility	Yes (COS22D-*1/3)	
SIP compatibility	Yes, max. 140 °C (284 °F) (COS22D-*1/3)	
Autoclavability	Yes, max. 140 °C (284 °F), max. 30 min. (COS22D-*1/3)	

13.5 Mechanical construction

Dimensions

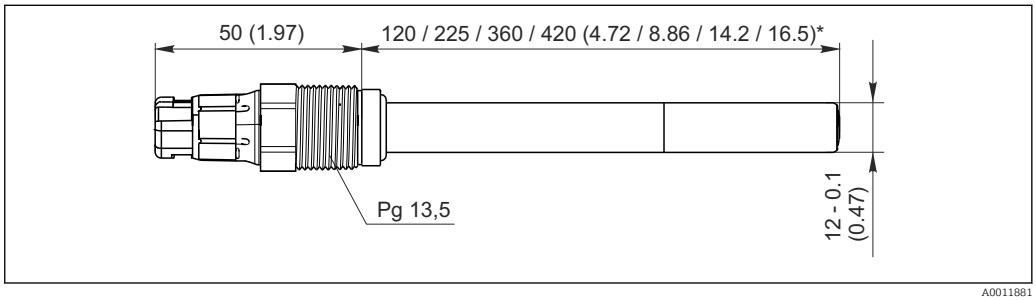

11 Dimensions in mm (inch)

Flow assembly for sensors with Ø 12 mm (accessories)

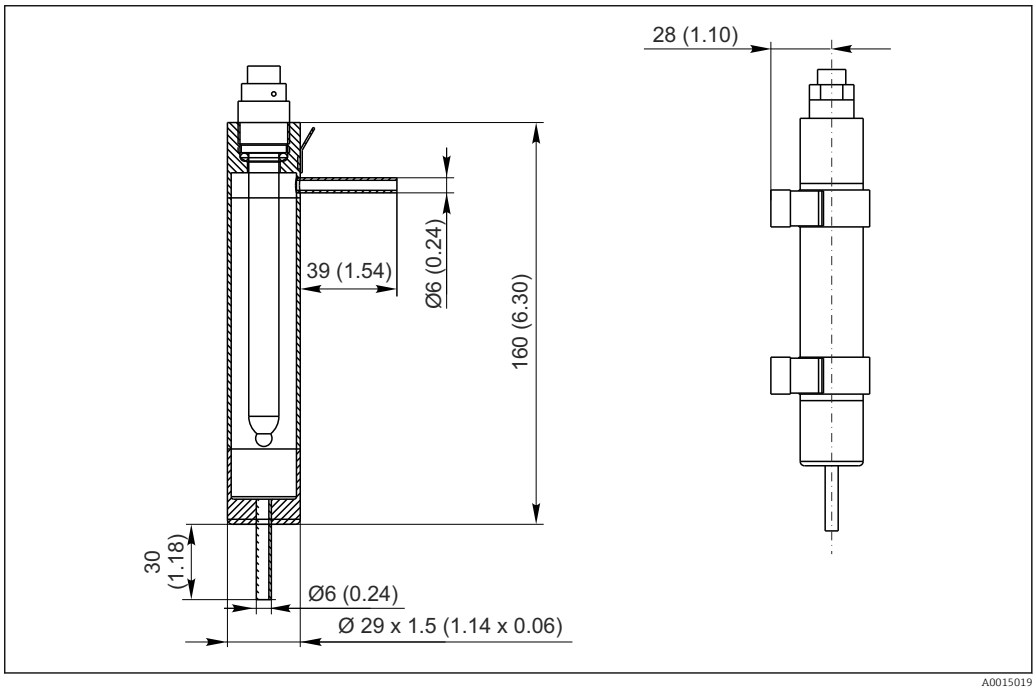

12 Dimensions in mm (inch)

Weight

Depending on the design (length)
0.2 kg (0.44 lbs) to 0.7 kg (1.54 lbs)

Materials

Parts in contact with medium

Sensor shaft (depending on the version)	Stainless steel 1.4435 (AISI 316L) Titanium Alloy C22
Electrode combination	COS22D-*1/3: silver / platinum COS22D-*4: silver / gold
Process seal	VITON (FDA-compliant)
Process seal for ATEX/FM/CSA/NEPSI/TIIS	VITON (not FDA-compliant)
Seals/O-rings	VITON (FDA-compliant)
Membrane body, sealing ring for shaft sleeve	Perfluoroelastomer with USP88 Class VI
Membrane	Silicone (FDA-compliant, in compliance with USP87/88 class VI), PTFE, steel mesh

Process connection

Pg 13.5

Surface roughness	R_a < 0.38 µm	
Temperature sensor	NTC 22 kΩ	
Electrolyte	COS22D-*1 (standard sensor):	Slightly alkaline electrolyte
	COS22D-*3 (trace sensor):	Neutral electrolyte
	COS22D-*4 (trace sensor, gold):	Slightly alkaline electrolyte

14 EC Declaration of Conformity

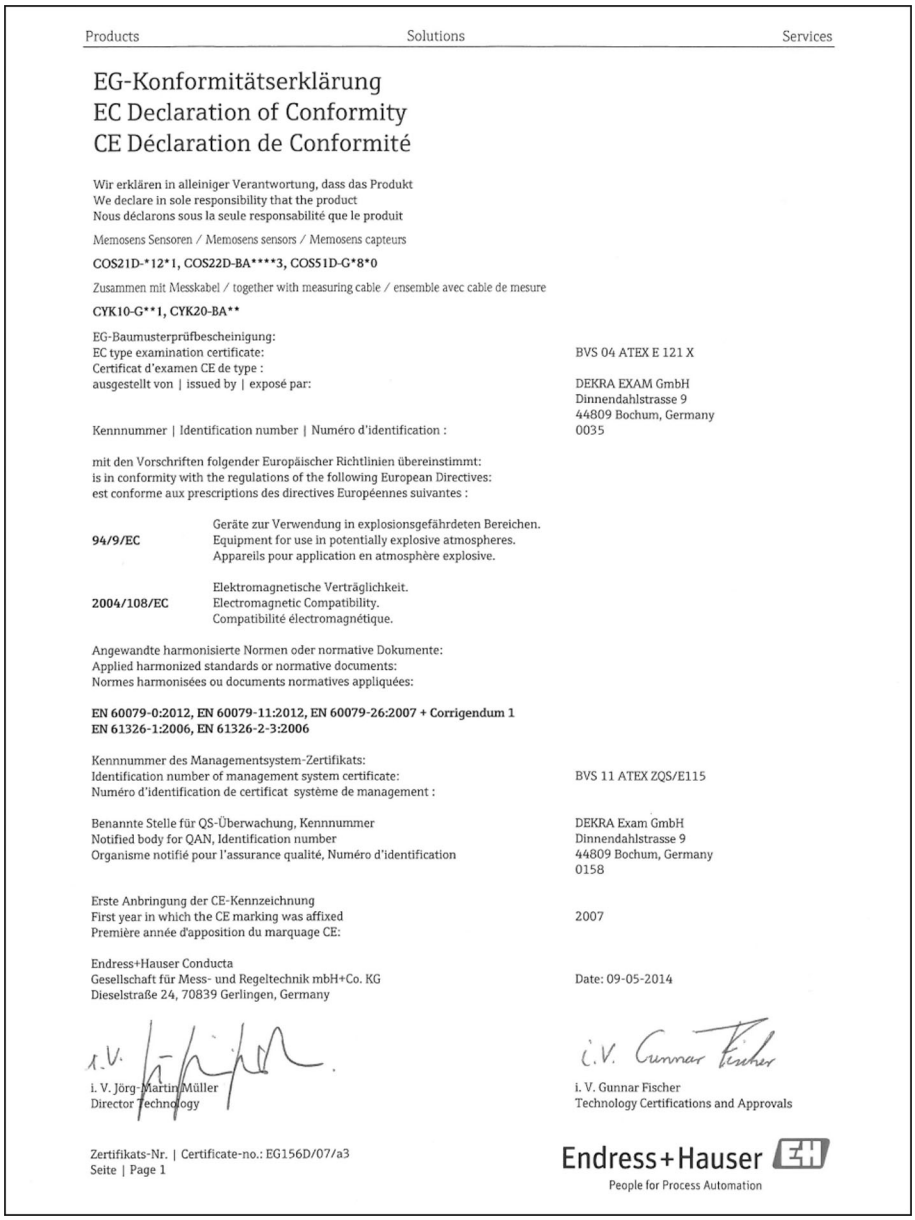

Products Solutions Services

EG-Konformitätserklärung
EC Declaration of Conformity
CE Déclaration de Conformité

Wir erklären in alleiniger Verantwortung, dass das Produkt
We declare in sole responsibility that the product
Nous déclarons sous la seule responsabilité que le produit

Memosens Sensoren / Memosens sensors / Memosens capteurs

COS21D-*12*1, COS22D-BA**3, COS51D-G*8*0**

Zusammen mit Messkabel / together with measuring cable / ensemble avec cable de mesure

CYK10-G1, CYK20-BA****

EG-Baumusterprüfbescheinigung: EC type examination certificate: Certificat d'examen CE de type : ausgestellt von | issued by | exposé par:	BVS 04 ATEX E 121 X DEKRA EXAM GmbH Dinnendahlstrasse 9 44809 Bochum, Germany
Kennnummer | Identification number | Numéro d'identification :	0035

mit den Vorschriften folgender Europäischer Richtlinien übereinstimmt:
is in conformity with the regulations of the following European Directives:
est conforme aux prescriptions des directives Européennes suivantes :

94/9/EC	Geräte zur Verwendung in explosionsgefährdeten Bereichen. Equipment for use in potentially explosive atmospheres. Appareils pour application en atmosphère explosive.
2004/108/EC	Elektromagnetische Verträglichkeit. Electromagnetic Compatibility. Compatibilité électromagnétique.

Angewandte harmonisierte Normen oder normative Dokumente:
Applied harmonized standards or normative documents:
Normes harmonisées ou documents normatives appliquées:

EN 60079-0:2012, EN 60079-11:2012, EN 60079-26:2007 + Corrigendum 1
EN 61326-1:2006, EN 61326-2-3:2006

Kennnummer des Managementsystem-Zertifikats: Identification number of management system certificate: Numéro d'identification de certificat système de management :	BVS 11 ATEX ZQS/E115
Benannte Stelle für QS-Überwachung, Kennnummer Notified body for QAN, Identification number Organisme notifié pour l'assurance qualité, Numéro d'identification	DEKRA Exam GmbH Dinnendahlstrasse 9 44809 Bochum, Germany 0158
Erste Anbringung der CE-Kennzeichnung First year in which the CE marking was affixed Première année d'apposition du marquage CE:	2007
Endress+Hauser Conducta Gesellschaft für Mess- und Regeltechnik mbH+Co. KG Dieselstraße 24, 70839 Gerlingen, Germany	Date: 09-05-2014

i. V. Jörg-Martin Müller
Director Technology

i. V. Gunnar Fischer
Technology Certifications and Approvals

Zertifikats-Nr. | Certificate-no.: EG156D/07/a3
Seite | Page 1

Endress+Hauser
People for Process Automation

Index

A
Accessories 31
Adjustment 21
Ambient temperature range 35
Amperometric measuring principle 9
Assemblies 31
Autoclavability 36

C
Calibration
- Calculation example 22
- In air 21
- Types of calibration 21
- Zero point calibration 23

Cathode 30
Certification body 12
Check
- Connection 20
- Function 24
- Installation 18

Chemical resistance 36
CIP compatibility 36
Connection
- Check 20
- Ensuring the degree of protection 20

Cross-sensitivity 36
Cust. tag number 15

D
Declaration of Conformity 12
Degree of protection
- Ensuring 20
- Technical data 35

Designated use 5
Device description 9
Disposal 33

E
EHEDG 13
Electrical connection 19
Electrolyte
- Operating time 29
- Properties 38
- Replacement 29

Environment 35
Ex approvals 12

F
FDA compatibility 12
Function check 24

G
Glass body 30

H
Hazardous areas 6
Humidity 35

I
Incoming acceptance 11
Influence of the medium pressure 35
Installation
- Check 18
- Examples 16
- Orientation 14
- Sensor 15

Installation instructions 14
Intrinsic oxygen consumption 35

L
Long-term drift 35

M
Maintenance schedule 27
Maintenance tasks 27
Material test certificate 13
Materials 37
Maximum measured error 34
Measured value resolution 34
Measured values 34
Measuring cable 31
Measuring principle 9
Measuring ranges 34
Measuring system 15
Medium pressure 35
Membrane body
- Description 9
- Replace 30

Minimum flow 36
Mode of operation 9

N
Nameplate 11

O
Occupational safety 5
Operational safety 6
Orientation 14

P
Performance characteristics 34
Polarization 10
Polarization time 35
Pressure temperature load curve 36
Process 36
Process connection 37
Process pressure 36
Process temperature 36
Product identification 11
Product safety 6

R
reference operating conditions 34
Repair 33
Replacing sealing rings 29

Response time 34
Return 33

S

Safety
  Electrical equipment in hazardous areas 6
  Occupational safety 5
  Operation 6
  Product 6
Safety instructions 5
Scope of delivery 12
Sensor
  Calibration 25
  Cleaning 28
  Connecting 20
  Design 9
  Mounting 15
  Polarization 10, 24
Sensor design 9
Signal current in air 34
SIP compatibility 36
Spare parts 33
State of the art 6
Storage temperature 35
Surface roughness 38
Symbols 4

T

Technical data
  Environment 35
  Input 34
  Mechanical construction 37
  Performance characteristics 34
  Process 36
Temperature compensation 35
Temperature sensor 38
Temperature-pressure ratings 36
Troubleshooting 26

U

Use 5

W

Warnings 4
Wear parts and consumables 28
Weight 37

Z

Zero current 34
Zero solution
  Application 23
Zero-point gel 32

www.addresses.endress.com

Endress+Hauser

People for Process Automation

10.20 - E1-6 – ENDRESS & HAUSER PRESSURE TRANSMITTER

Level | Pressure | Flow | Temperature | Liquid Analysis | Registration | Systems Components | Services | Solutions

Operating Instructions

Cerabar T PMC131

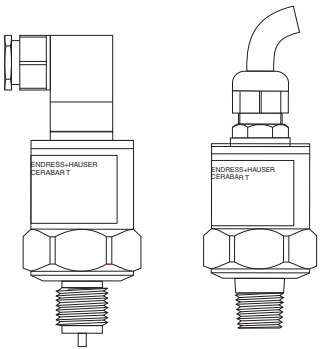

de – Drucktransducer
en – Pressure Transducer
fr – Transducteur de pression
it – Trasduttore di pressione
es – Transmisorde presión
nl – Druk-transducer

KA00085P/00/A6/13.12
71158704

Endress+Hauser
People for Process Automation

de - Inhalt

Geräte-Identifikation	4
Abmessungen	5
Montage	6
Elektrischer Anschluss	8
Technische Daten	10

en - Contents

Device Identification	4
Dimensions	5
Mounting	6
Electrical Connection	8
Technical Data	10

fr - Sommaire

Dénomination de l'appareil	4
Dimensions	5
Montage	6
Raccordement électrique	8
Caractéristiques techniques	10

de - Sicherheitshinweise

Der Cerabar T dient der Absolut- und Relativdruckmessung in Gasen, Dämpfen, Flüssigkeiten und Stäuben. Bei unsachgemäßem Einsatz können Gefahren von ihm ausgehen. Das Gerät darf nur von qualifiziertem und autorisiertem Fachpersonal unter strenger Beachtung dieser Betriebsanleitung und der Technischen Information TI00415P, der einschlägigen Normen, gesetzlichen Vorschriften und Zertifikate eingebaut, angeschlossen, in Betrieb genommen und gewartet werden.

en - Notes on Safety

The Cerabar T is designed for measuring absolute and gauge pressure of gases, vapours, liquids and dusts. If used incorrectly it is possible that application related dangers may arise.The Cerabar T may be installed, commissioned, operated and maintained by qualified and authorised personnel only, under strict observance of these operating instructions and Technical Information TI00415P, any relevant standards, legal requirements, and, where appropriate, the certificate.

fr - Conseils de sécurité

Le Cerabar T est destiné à la mesure de pression absolue et relative dans les gaz, vapeurs, liquides et poussières. Il peut être source de danger en cas d'utilisation non conforme aux prescriptions. L'appareil ne doit être installé, raccordé, mis en service et maintenu que par un personnel qualifié et autorisé, qui tiendra compte des indications contenues dans la présente mise en service et de l' Information Technique TI00415P, des normes en vigueur et des certificats disponibles (selon l'application).

es - Indice

Identificación del equipo	4
Dimensiones	5
Montaje	7
Conexiones eléctricas	8
Datos técnicos	10

it - Indice

Identificazione (strumento)	4
Dimensioni	5
Montaggio	7
Collegamento elettrico	8
Dati tecnici	10

nl - Inhoud

Instrument-identificatie	4
Afmetingen	5
Montage	7
Elektrische aansluiting	8
Omgevingscondities	10

es - Notas sobre seguridad

Cerabar T está diseñado para medir presión absoluta y relativa en gases, vapores, liquidos y sólidos pulvurulentos. Su empleo inapropiado puede resultar peligroso. El equipo deberá ser montado, conectado, instalado y mantenido única y exclusivamente por personal cualificado y autorizado, bajo rigurosa observación de las presentes instrucciones de servicio y de la Informatión Técnica TI00415P, de las normativas y legislaciones vigentes, así como de los certificados (dependiendo de la aplicación).

it - Note sulla sicurezza

Il Cerabar T è stato progettato per la misura della pressione assoluta e relativa di gas, vapori, liquidi e polveri. Un'installazione non corretta può determinare pericolo per le persone e le cose. Lo strumento deve essere montato collegato e messo in servizio solamente da personale qualificato ed autorizzato, nel totale rispetto delle indicazioni operative qui riportate, delle prescrizioni presenti nelle informazioni tecniche TI00415P ed in accordo a tutte le norme e legislazioni vigenti e le certificazioni utilizzate.

nl - Veiligheidsinstructies

De Cerabar T is ontworpen voor het meten absoluut en overdruk van gassen, dampen, vloeistoffen en vaste stoffen. Bij niet correct gebruik kunnen gevaarlijke situaties onstaan. Het instrument mag uitsluitend door gekwalificeerd en geautoriseerd vakpersoneel geinstalleerd, aangesloten en inbedrijf genomen worden met inachtneming van dit inbedrij-fstellingsvoorschrift, het bijbehorende Technisch Informatie blad TI00415P en de betreffende normen, de wettelijke voorschriften en eventuele certificaten in acht.

de - Geräte-Identifikation

en - Device Identification

fr - Dénomination de l'appareil

es - Identificación del equipo

it - Identificazione dello strumento

nl - Instrument-identificatie

1 = G ½A, ISO 228
1.4301 (AISI 304)

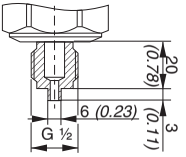

2 = ½ MNPT, ¼ FNPT,
1.4301 (AISI 304)

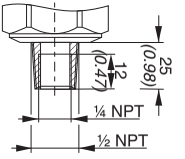

5 = G ½A, ø11 mm, ISO228
1.4301 (AISI 304)

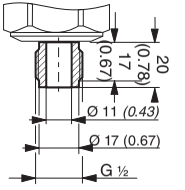

F = FKM Viton
S = FKM Viton, O_2

1 = ohne/without/sans/sin/senza/zonder
2 = Protokoll/Protocol/Protocole
S = German Lloyd

p

D10 = 0..100 mbar, 0...10 kPa
• • •
R4T = 0...500 psi a

de - Montage

- Die Funktion des Drucktransducers ist unabhängig von der Einbaulage.
- Zum Schutz des Gewindes und der Druckmembran darf die Schutzkappe am Gewindestutzen erst kurz vor dem Einbau entfernt werden.
- Der Drucktransducer ist nach den gleichen Richtlinien wie ein Manometer zu montieren. Wir empfehlen die Verwendung von Absperrhähnen und Wassersackrohren.
- Beim Einbau ist darauf zu achten, dass kein Tropfwasser in das Gehäuse eindringen kann.
- Einsatzgrenzen für Sauerstoff beachten (bei FKM Viton/O_2 gemäß BAM-Liste).
- Bei Anwendungen in explosionsfähiger Atmosphäre der Zone 2 (Zündschutzart Ex nA), Gehäuse vor Schlageinwirkung schützen.

en - Mounting

- The function of the transducer is independent of mounting orientation.
- To protect the thread and pressure diaphragm from damage, the protective cover on the threaded nozzle should be removed just before installation only.
- The pressure transducer is to be mounted like a manometer. The guidelines are identical. Isolating valves and water pocket pipes should be used.
- When installing, ensure that no water enters the housing.
- Note the application limits for oxygen (for FKM Viton/O_2 as per BAM list).
- In the event of applications in a Zone 2 explosive atmosphere (Ex nA explosion protection) protect the housing from impact.

fr - Montage

- Le fonctionnement du transducteur de pression est indépendant de son implantation.
- Afin de protéger le filetage et la membrane, ne retirer le capot de protection, placé sur le raccord fileté, qu'au moment du montage.
- Le transducteur de pression doit être monté conformément aux directives concernant les manomètres. Nous recommandons l'utilisation de robinets d'isolement et de siphons.
- Lors du montage, veiller à ce qu'il n'y ait pas d'infiltration d'eau dans le boîtier.
- Tenir compte des limites d'utilisation sur l'oxygène (pour FKP Viton/O_2 selon liste BAM).
- Les applications en atmosphère explosible de zone 2 (mode de protection antidéflagrant Ex nA), protéger le boîtier contre les chocs.

es - Montaje

- El funcionamiento del transmisor de presión es independiente de la orientación de montaje.
- No retirar la protección del casquillo roscado hasta el momento previo a su instalación para evitar dañar la rosca o el diafragma de presión.
- El transmisor de presión se deberá montar como un manómetro. El procedimiento es el mismo. Utilizar válvulas de corte y sifón.
- Durante la instalación asegurar que no entre agua en la caja.
- Observar los límites de utilización en oxígeno (para FKP Viton/O_2 según lista BAM).
- En las aplicaciones en atmósferas con riesgo de explosión de la zona 2 (tipo de protección contra ignición Ex nA) se debe proteger la carcasa contra el efecto de los impactos.

it - Montaggio

- Il funzionamento del trasduttore non dipende dalla posizione di montaggio.
- Per proteggere la filettatura e la membrana di pressione da eventuali danneggiamenti, eliminare il coperchio di protezione dell'ugello filettato solo immediatamente prima dell'installazione.
- Il trasduttore di pressione deve essere montato come un manometro. Utilizzare solo valvole di arresto e tubi separatori d'acqua.
- Durante l'installazione, assicurarsi che non entri acqua nella custodia.
- Osservare i limiti operativi per ossigeno (per FKM Viton/O_2 in accordo con lista BAM).
- Per l'utilizzo in ambienti a rischio di esplosione della zona 2 (Protezione antideflagrante Ex nA), proteggere le custodie contro gli urti.

nl - Montage

- Het functioneren van de Druk-transducer is onhafhankelijk van de montagepositie.
- Ter bescherming van de buitendraad en het membraan moet de beschermhuls pas vlak voor de montage verwijderd worden.
- De Druk-transducer moet identiek als een manometer gemonteerd worden. De richtlijnen t.a.v. gebruik van afsluitkranen, afstandsstukken en watersloten moeten worden aangehouden.
- Bij installatie ervoor zorgen dat er geen water in de behuizing kan komen, ook niet via de connector/wartel.
- Toepassingen in zuurstof bekijken (met FKM Viton/O_2 conform BAM lijst).
- Bescherm de behuizing tegen schokken bij toepassingen in explosiegevaarlijke atmosferen zone 2 (ontstekingsklasse Ex nA).

de - **Elektrischer Anschluss**
Stecker-Version

en - **Electrical Connection**
Plug version

fr - **Raccordement électrique**
Version connecteur

es - **Conexión eléctrica**
Con conector

it - **Collegamento elettrico**
Spina

nl - **Elektrische aansluiting**
Steker-versie

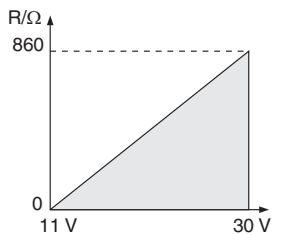

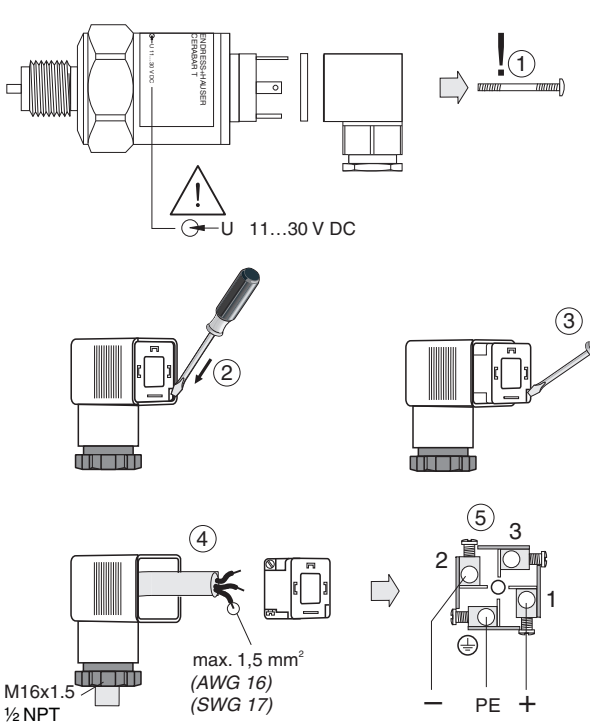

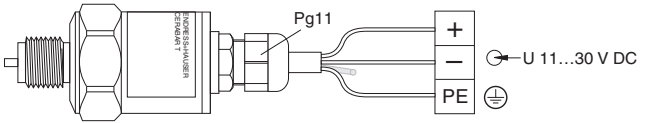

de - Referenzluft- Zuführung
Nicht verschließen! Vor Wasser schützen!

en - Reference air tube
Do not close! Protect from water!

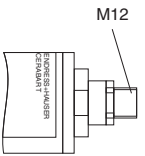

fr - Mise à l'atmosphère
Ne pas boucher! Prótéger de l'eau!

es - Tubo de compensación de presión atmosférica
No tapar! Proteger del agua!

it - Ingresso aria di riferimento
Non chiudere! Proteggere dall'acqua!

nl - Drukvereffening
Niet laten vervuilen en beschermen tegen vocht!

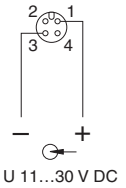

de + = rot; – = schwarz, PE = grün/gelb
en + = red; – = black, PE = green/yellow
fr + = rouge; – = noir, PE = vert/jaune
es + = rojo, – = negro, PE = verde/amarillo
it + = rosso, – = nero, PE = verde/giallo
nl + = rood; – = zwart, PE = groen/geel

de - Elektrischer Anschluß
Kabel-/Stecker-Version

en - Electrical Connection
Cable/plug version

fr - Raccordement électrique
Version câble/connecteur

es - Conexión eléctrica
Cable/conector

it - Collegamento elettrico
Cavo/spina

nl - Elektrische aansluiting
Kabel-/steker-versie

de - Einsatzbedingungen

- Umgebungstemperatur: –20…85 °C
- Lagerungstemperatur: –50…100 °C
- Meßstofftemperaturgrenze: max. 100 °C
- Meßstoffdruckgrenze: p_{max}
- Geräte mit CSA GP-Zulassung dürfen nur mit einer SELV oder Class 2 Spannungsversorgung betrieben werden.

en - Operating Conditions

- Ambient temperature range: –20…85°C
- Storage temperature range: –50…100°C
- Limiting temperature range: max. 100°C
- Limiting pressure range: p_{max}
- Devices with CSA GP approval may only be operated with a SELV or Class 2 power supply.

fr - Conditions d'utilisation

- Température ambiante: –20…85 °C
- Température de stockage: –50…100 °C
- Limite de température du produit: max. 100 °C
- Limite de pression du produit: p_{max}
- Les appareils avec agrément CSA GP ne doivent être utilisés qu'avec une tension d'alimentation SELV ou Class 2.

es - Condiciones de operación

- Rango de temperatura ambiental: –20…85 °C
- Rango de temperatura de almacenamiento: –50…100 °C
- Temperatura máxima de trabajo: máx. 100 °C
- Presión máx. de trabajo: p_{max}
- Los equipos con la certificación CSA GP sólo pueden trabajar con alimentación de clase 2 o SELV.

it - Condizioni operative

- Temperatura ambiente: –20…85 °C
- Temperatura per la conservazione in magazzino: –50…100 °C
- Temperatura limite del prodotto: max. 100 °C
- Pressione limite del prodotto: p_{max}
- Strumenti con approvazione CSA GP possono essere alimentati solo con unità tipo SELV o Classe 2

nl - Omgevingscondities

- Omgevingstemperatuur: –20…+85 °C
- Opslagtemperatuur: –50…100 °C
- Producttemp. : max. 100 °C
- max. procesdruk: p_{max}
- Instrumenten met een CSA GP certificaat mogen uitsluitend via een SELV of een klasse 2 voeding gevoed worden.

www.endress.com/worldwide

KA00085P/00/A6/13.12 71158704/CCS/FM9

71158704

10.21 - E1-7 – ENDRESS & HAUSER FLOWMETER

Level Pressure Flow Temperature Liquid Analysis Registration Systems Components Services Solutions

Brief Operating Instructions

Proline Promag 10D

Electromagnetic flow measuring system

HART

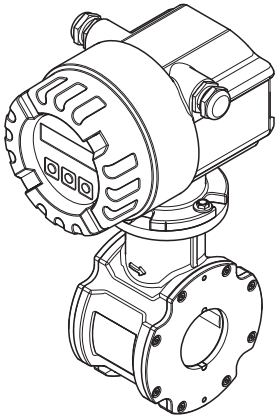

These Brief Operating Instructions are **not** intended to replace the Operating Instructions provided in the scope of supply.
Detailed information is provided in the Operating Instructions and the additional documentation on the CD-ROM supplied.

The complete device documentation consists of:
- These Brief Operating Instructions
- Depending on the device version:
  - Operating Instructions and the Description of Device Functions
  - Approvals and safety certificates
  - Special safety instructions in accordance with the approvals for the device (e.g. explosion protection, pressure equipment directive etc.)
  - Additional device-specific information

KA00036D/06/EN/13.15
71299364

Endress+Hauser

People for Process Automation

Table of contents

1 Safety instructions 3
1.1 Designated use 3
1.2 Installation, commissioning and operation 3
1.3 Operational safety 3
1.4 Safety conventions 5

2 Installation 6
2.1 Installation conditions 6
2.2 Installing the sensor 10
2.3 Installing the transmitter housing 14
2.4 Post-installation check 16

3 Wiring. 17
3.1 Connecting the various housing types 18
3.2 Connecting the remote version connecting cable 19
3.3 Potential equalization 21
3.4 Degree of protection 22
3.5 Post-connection check 22

4 Commissioning 23
4.1 Switching on the measuring device 23
4.2 Operation 24
4.3 Navigating within the function matrix 25
4.4 Device functions to be configured during commissioning 26
4.5 Troubleshooting 27

1 Safety instructions

1.1 Designated use

- The measuring device is to be used only for measuring the flow of conductive liquids in closed pipes. Most liquids can be measured as of a minimum conductivity of 50 µS/cm.
- Any use other than that described here compromises the safety of persons and the entire measuring system and is, therefore, not permitted.
- The manufacturer is not liable for damage caused by improper or non-designated use.

1.2 Installation, commissioning and operation

- The measuring device must only be installed, connected, commissioned and maintained by qualified and authorized specialists (e.g. electrical technicians) in full compliance with the instructions in these Brief Operating Instructions, the applicable norms, legal regulations and certificates (depending on the application).
- The specialists must have read and understood these Brief Operating Instructions and must follow the instructions they contain. If you are unclear on anything in these Brief Operating Instructions, you must read the Operating Instructions (on the CD-ROM). The Operating Instructions provide detailed information on the measuring device.
- The measuring device should only be installed in the pipe in a de-energized state free from outside loads or strain.
- The measuring device may only be modified if such work is expressly permitted in the Operating Instructions (on the CD-ROM).
- Repairs may only be performed if a genuine spare parts kit is available and this repair work is expressly permitted.
- If performing welding work on the piping, the welding unit may not be grounded by means of the measuring device.

1.3 Operational safety

- The measuring device is designed to meet state-of-the-art safety requirements, has been tested, and left the factory in a condition in which it is safe to operate. Relevant regulations and European standards have been observed.
- The manufacturer reserves the right to modify technical data without prior notice. Your Endress+Hauser distributor will supply you with current information and updates to these Operating Instructions.
- The information on the warning notices, nameplates and connection diagrams affixed to the device must be observed. These contain important data on the permitted operating conditions, the range of application of the device and information on the materials used.
- If the device is not used at atmospheric temperatures, compliance with the relevant marginal conditions as specified in the device documentation supplied (on CD-ROM) is mandatory.
- All parts of the device must be included in the potential equalization of the system.

- Cables, certified cable glands and certified dummy plugs must be suitable to withstand the prevailing operating conditions, such as the temperature range of the process. Housing apertures that are not used must be sealed with dummy plugs.
- The device should only be used for fluids to which all the wetted parts of the device are sufficiently resistant. With regard to special fluids, including fluids used for cleaning, Endress+Hauser will be happy to assist in clarifying the corrosion–resistant properties of wetted materials.
  However, minor changes in temperature, concentration or in the degree of contamination in the process may result in variations in corrosion resistance.
  For this reason, Endress+Hauser does not accept any responsibility with regard to the corrosion resistance of wetted materials in a specific application. The user is responsible for the choice of suitable wetted materials in the process.
- When hot fluid passes through the measuring tube, the surface temperature of the housing increases. In the case of the sensor, in particular, users should expect temperatures that can be close to the fluid temperature. If the temperature of the fluid is high, implement sufficient measures to prevent burning or scalding.
- Hazardous areas:
  Measuring devices for use in hazardous areas are labeled accordingly on the nameplate. Relevant national regulations must be observed when operating the device in hazardous areas.
- Hygienic applications:
  Measuring devices for hygienic applications have their own special labeling. Relevant national regulations must be observed when using these devices.
- Pressure devices:
  Measuring devices for use in systems that need to be monitored are labeled accordingly on the nameplate. Relevant national regulations must be observed when using these devices. The documentation on the CD–ROM for pressure devices in systems that need to be monitored is an integral part of the entire device documentation. The installation regulations, connection data and safety instructions provided in the Ex documentation must be observed.
- Endress+Hauser will be happy to assist in clarifying any questions on approvals, their application and implementation.

1.4 Safety conventions

⚠ Warning!
"Warning" indicates an action or procedure which, if not performed correctly, can result in injury or a safety hazard. Comply strictly with the instructions and proceed with care.

☝ Caution!
“Caution” indicates an action or procedure which, if not performed correctly, can result in incorrect operation or destruction of the device. Comply strictly with the instructions.

✎ Note!
"Note" indicates an action or procedure which, if not performed correctly, can have an indirect effect on operation or trigger an unexpected response on the part of the device.

2 Installation

2.1 Installation conditions

2.1.1 Dimensions

For the dimensions of the measuring device, → see the associated Technical Information on the CD-ROM.

Mounting location

The sensor should preferably be installed in an ascending pipe. Ensure the sensor is an adequate distance (≥ 2 x DN) away from the next pipe bend.

✎ Note!
Entrained air or gas bubble formation in the measuring tube can result in an increase in measuring errors. For this reason, the following mounting locations should be **avoided**:
- Highest point of a pipeline. Risk of air accumulating!
- Directly upstream from a free pipe outlet in a vertical pipeline. Risk of pipe not filling correctly!

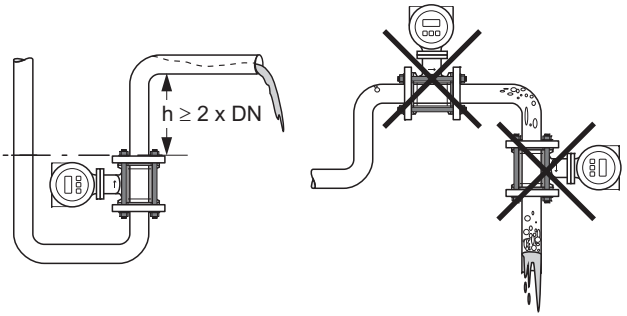

a0010747

Partially filled pipes

Partially filled pipes with gradients necessitate a drain-type configuration.

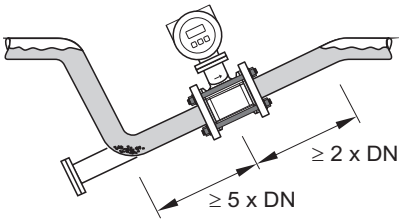

a0010749

Installation in a partially filled pipe

Installation with pumps

The sensor should only be installed on the pump pressure side.

Note!
- The sensor should **never** be installed on the pump suction side in order to avoid the risk of low pressure, and thus damage to the measuring tube.
- Pulsation dampers may be needed if the sensor is installed downstream from piston pumps, piston diaphragm pumps or hose pumps.

For information on the measuring tube's pressure tightness and the device's resistance to vibration and shock → see the related Technical Information on the CD-ROM.

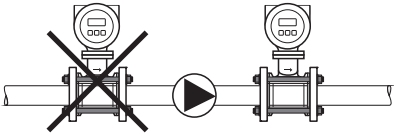

a0010748

Down pipes

Install a siphon or a vent valve downstream of the sensor in down pipes longer than 5 meters (16 ft). This precaution is to avoid low pressure and the consequent risk of damage to the measuring tube. This measure also prevents the system losing prime, which could cause air pockets. For information on the measuring tube's pressure tightness → see the related Technical Information on the CD-ROM.

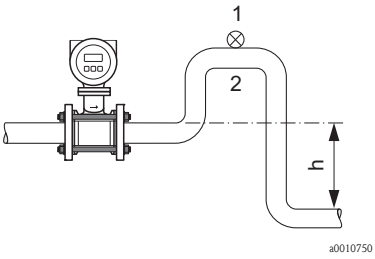

a0010750

Measures for installation in a down pipe (h > 5 m/16 ft)
1. Vent valve
2. Siphon

Orientation

Vertical orientation

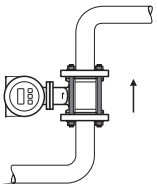

a0010709

Measures for installation in a down pipe (h > 5 m/16 ft)
Vertical orientation is generally preferred. Vertical orientation helps avoid gas and air accumulations and deposits in the measuring tube.

Horizontal orientation

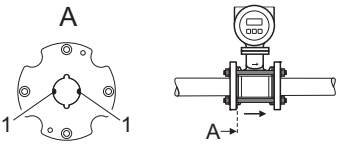

a0010710

The measuring electrode axis should be horizontal in the case of horizontal orientations. This prevents brief insulation of the two measuring electrodes by entrained air bubbles.
1 = Measuring electrodes for signal detection

Inlet and outlet run

If possible, install the sensor upstream from fittings such as valves, T-pieces, elbows, etc.

The following inlet and outlet runs must be observed in order to meet accuracy specifications:
- Inlet run ≥ 5 × DN
- Outlet run ≥ 2 × DN

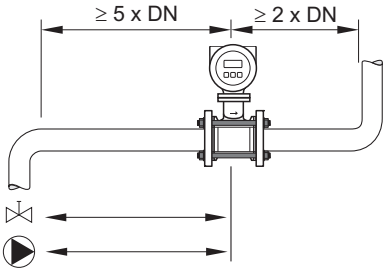

a0010751

2.1.2 Vibrations

Secure the piping and the sensor if vibration is severe.

☝.Caution!
If vibrations are too severe (>2 g/2 h per day; 10 to 100 Hz), we recommend the sensor and transmitter be mounted separately. For information on the permitted shock and vibration resistance → see the Technical Information on the CD-ROM.

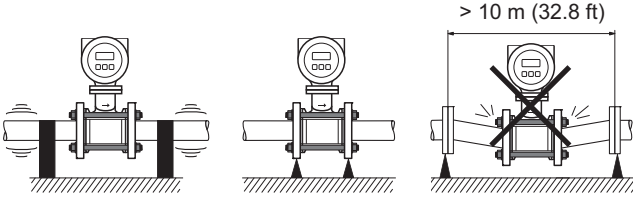

a0010752-ae

2.1.3 Length of connecting cable

Note the following when mounting the remote version:

- Fix cable run or lay in armored conduit.

  ✎. Note!
  Cable movements can falsify the measuring signal especially in the case of low fluid conductivities.

- Route the cable well clear of electrical machines and switching elements.
- If necessary, establish potential equalization between the sensor and transmitter.
- The permitted length of the connection cable L_{max} (area shaded gray in the graphic) depends on the conductivity of the fluid. A minimum conductivity of 50 µS/cm is needed for all fluids.

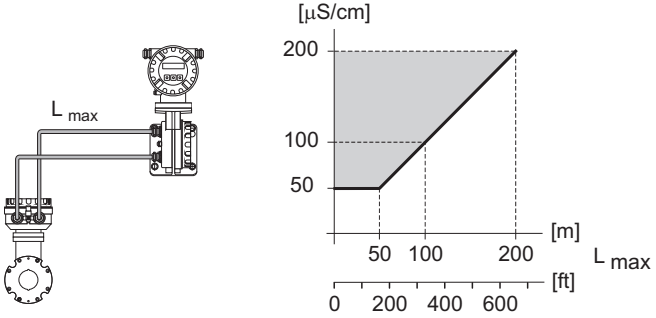

a0010754-ae

2.2 Installing the sensor

2.2.1 Mounting kit

The sensor is installed between the pipe flanges with a mounting kit. The device is centered using recesses on the sensor.

Note!
A mounting kit consisting of nuts (1), washers (2), mounting bolts (3) and seals (5) can be ordered separately. Centering sleeves (4) are provided with the device if they are required for the installation.

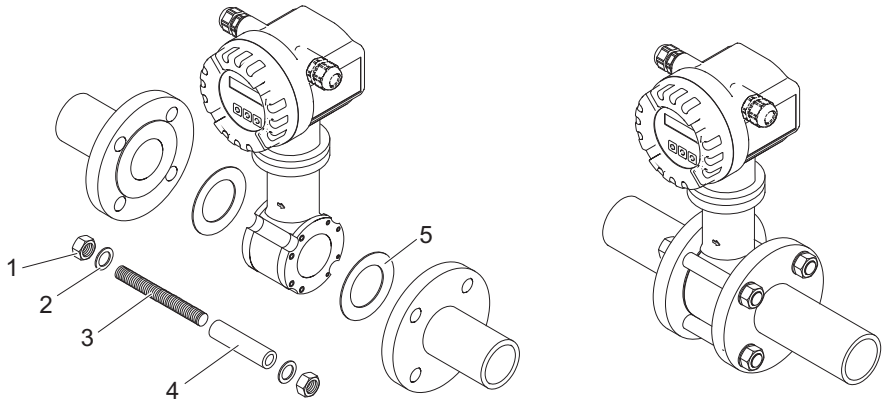

Seals

When installing the sensor, make sure that the seals used do not project into the pipe cross-section.

Caution!
Risk of short circuit!
Do not use electrically conductive sealing compounds such as graphite! An electrically conductive layer could form on the inside of the measuring tube and short-circuit the measuring signal.

Note!
Use seals with a hardness rating of 70° Shore.

Arrangement of the mounting bolts and centering sleeves

The device is centered using recesses on the sensor. The arrangement of the mounting bolts and the use of the centering sleeves supplied depend on the nominal diameter and pressure rating of the device.

	Pressure rating	
EN (DIN)	ANSI	JIS
DN 25 to 40 (1" to 1 ½")		
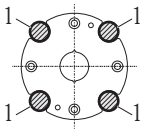 A0010896	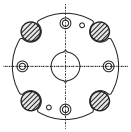 A0010824	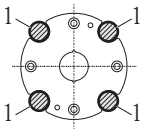 A0010896
DN 50 (2")		
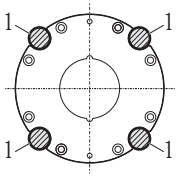 A0010897	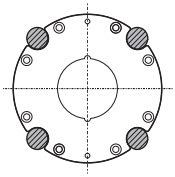 A0010825	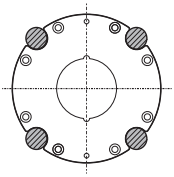 A0010825
DN 65		
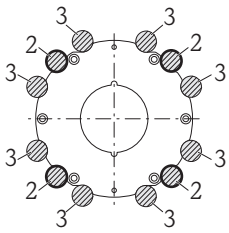 A0012170	—	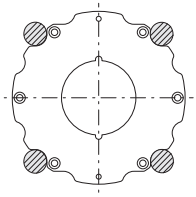 A0012171

DN 80 (3")

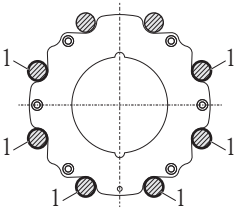

A0010898

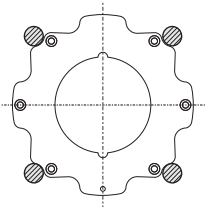
A0010827

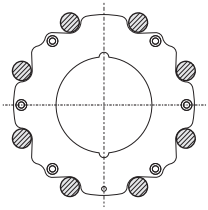
A0010826

DN 100 (4")

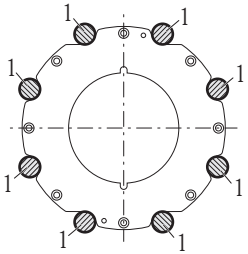

A0012168

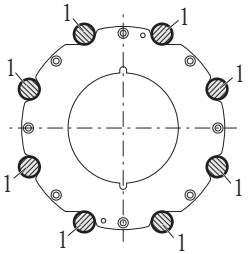

A0012168

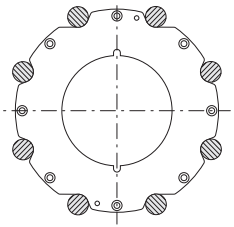
A0012169

1 = Mounting bolts with centering sleeves
2 = EN (DIN) flanges: 4-hole → with centering sleeves
3 = EN (DIN) flanges: 8-hole → without centering sleeves

Tightening torques

Please note the following:
- The tightening torques listed below are for lubricated threads only.
- Always tighten the screws uniformly and in diagonally opposite sequence.
- Overtightening the screws will deform the sealing faces or damage the seals.
- The tightening torques listed below apply only to pipes not subjected to tensile stress.

The tightening torques apply to situations where an EPDM soft material flat seal (e.g. 70 Shore) is used.

Tightening torques, mounting bolts and centering sleeves for EN (DIN) PN 16

Nominal diameter [mm]	Mounting bolts [mm]	Centering sleeve length [mm]	Tightening torque [Nm] with a process flange with a	
			smooth seal face	raised face
25	4 × M12 × 145	54	19	19
40	4 × M16 × 170	68	33	33
50	4 × M16 × 185	82	41	41
65[1)]	4 × M16 × 200	92	44	44

Nominal diameter [mm]	Mounting bolts [mm]	Centering sleeve length [mm]	Tightening torque [Nm] with a process flange with a	
			smooth seal face	raised face
65[2)]	8 × M16 × 200	– [3)]	29	29
80	8 × M16 × 225	116	36	36
100	8 × M16 × 260	147	40	40

[1)] EN (DIN) flanges: 4-hole → with centering sleeves
[2)] EN (DIN) flanges: 8-hole → without centering sleeves
[3)] A centering sleeve is not required. The device is centered directly via the sensor housing.

Tightening torques, mounting bolts and centering sleeves for JIS 10 K

Nominal diameter [mm]	Mounting bolts [mm]	Centering sleeve length [mm]	Tightening torque [Nm] with a process flange with a	
			smooth seal face	raised face
25	4 × M16 × 170	54	24	24
40	4 × M16 × 170	68	32	25
50	4 × M16 × 185	– *	38	30
65	4 × M16 × 200	– *	42	42
80	8 × M16 × 225	– *	36	28
100	8 × M16 × 260	– *	39	37

* A centering sleeve is not required. The device is centered directly via the sensor housing.

Tightening torques, mounting bolts and centering sleeves for ANSI Class 150

Nominal diameter [inch]	Mounting bolts [inch]	Centering sleeve length [inch]	Tightening torque [lbf · ft] with a process flange with a	
			smooth seal face	raised face
1"	4 × UNC 1/2" × 5.70"	– *	14	7
1 ½"	4 × UNC 1/2" × 6.50"	– *	21	14
2"	4 × UNC 5/8" × 7.50"	– *	30	27
3"	4 × UNC 5/8" × 9.25"	– *	31	31
4"	8 × UNC 5/8" × 10,4"	5,79	28	28

* A centering sleeve is not required. The device is centered directly via the sensor housing.

2.3 Installing the transmitter housing

2.3.1 Turning the transmitter housing

Turning the aluminum field housing

Caution!

- Raising the transmitter housing (Step c):
  Raise the transmitter housing max. 10 mm (0.39 inch) above the securing screws
- Turning the transmitter housing (Step d):
  Turn the transmitter housing max. 180° clockwise or counterclockwise

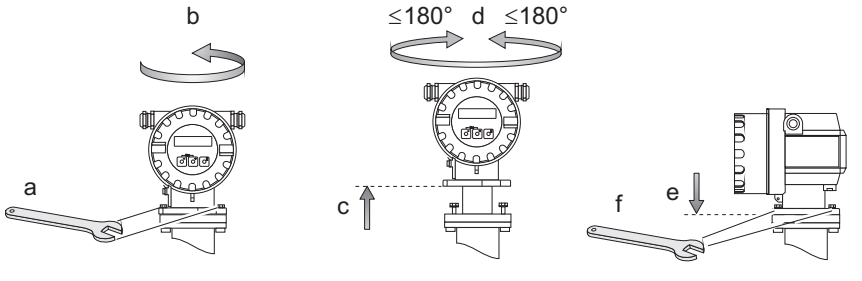

2.3.2 Turning the onsite display

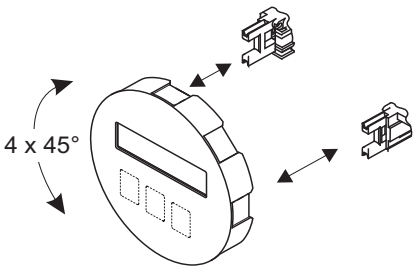

a. Unscrew cover of the electronics compartment from the transmitter housing.

b. Remove the display module from the transmitter retaining rails.

c. Turn the display to the desired position (max. 4 x 45° in each direction).

d. Fit the display back onto the retaining rails.

e. Screw the cover of the electronics compartment firmly back onto the transmitter housing.

2.3.3 Mounting the transmitter (remote version)

Caution!

- The ambient temperature range –20 to +60°C (–4 to +140°F) may not be exceeded at the mounting location. Avoid direct sunlight.
- If the device is mounted to a warm pipe, make sure that the housing temperature does not exceed +60 °C (+140 °F), which is the maximum permissible temperature.

The transmitter can be mounted directly on a wall (A) or a pipe (B).

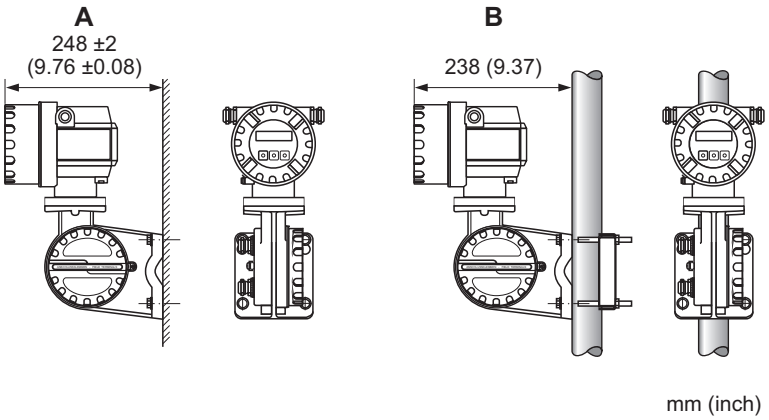

A0010753-ae

2.4 Post-installation check

- Is the measuring device damaged (visual inspection)?
- Does the device correspond to specifications at the measuring point, including process temperature and pressure, ambient temperature, minimum fluid conductivity, measuring range, etc.?
- Does the arrow on the sensor nameplate match the actual direction of flow through the pipe?
- Is the position of the measuring electrode plane correct?
- Is the position of the empty pipe detection electrode correct?
- Were all screws tightened to the specified torques when the sensor was installed?
- Were the correct seals used (type, material, installation)?
- Are the measuring point number and labeling correct (visual inspection)?
- Were the inlet and outlet runs respected?
- Is the measuring device protected against moisture and direct sunlight?
- Is the sensor adequately protected against vibration (attachment, support)?
  Acceleration up to 2 g by analogy with IEC 600 68-2-8

3 Wiring

⚠ Warning!
Risk of electric shock! Components carry dangerous voltages.
- Never mount or wire the measuring device while it is connected to the power supply.
- Before connecting the power supply, check the safety equipment.
- Route the power supply and signal cables so they are securely seated.
- Seal the cable entries and covers tight.

☝ Caution!
Risk of damaging the electronic components!
- Connect the power supply in accordance with the connection data on the nameplate.
- Connect the signal cable in accordance with the connection data in the Operating Instructions.

In addition, for the remote version:

☝ Caution!
Risk of damaging the electronic components!
- Only connect sensors and transmitters with the same serial number.
- Observe the cable specifications of the connecting cable → Operating Instructions on the CD-ROM.

✎ Note!
Install the connecting cable securely to prevent movement.

3.1 Connecting the various housing types

Wire the unit using the terminal assignment diagram inside the cover.

3.1.1 Compact version

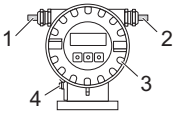

A0010755

Transmitter connection:

1 Signal cable
2 Power supply cable
3 Electronics compartment cover (connection diagram on the cover of the connection compartment)
4 Ground terminal for potential equalization

3.1.2 Remote version (transmitter)

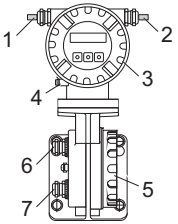

A0010757

Transmitter connection:

1 Signal cable
2 Power supply cable
3 Electronics compartment cover (connection diagram on the cover of the connection compartment)
4 Ground terminal for potential equalization

Connecting the connecting cable (∅ it 19):

5 Connection compartment cover (connection diagram on the inside)
6 Coil current cable
7 Signal cable

3.1.3 Remote version (sensor)

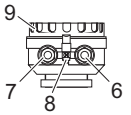

A0010758

Transmitter connection:

9 Connection compartment cover (connection diagram on the inside)

Connecting the connecting cable (∅ it 19):

6 Coil current cable
7 Signal cable
8 Ground terminal for potential equalization

3.2 Connecting the remote version connecting cable

3.2.1 Connecting cable

Connecting cable termination

Terminate the signal and coil current cables as shown in the figure below (Detail A).
Fit the fine-wire cores with cable end ferrules (Detail B).

Signal cable termination

Make sure that the cable end ferrules do not touch the wire shields on the sensor side! Minimum distance = 1 mm (0.04"), exception "GND" = green cable.

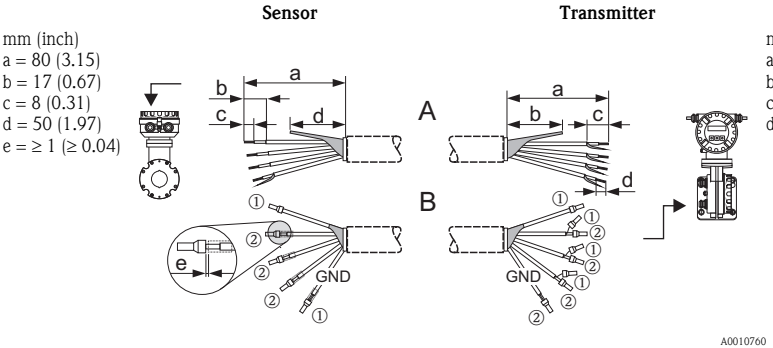

① = Cable end ferrules, red, ∅ 1.0 mm (0.04"); ② = Cable end ferrules, white, ∅ 0.5 mm (0.02")

Coil current cable termination

Insulate one core of the three-core cable at the level of the core reinforcement; you only require two cores for the connection.

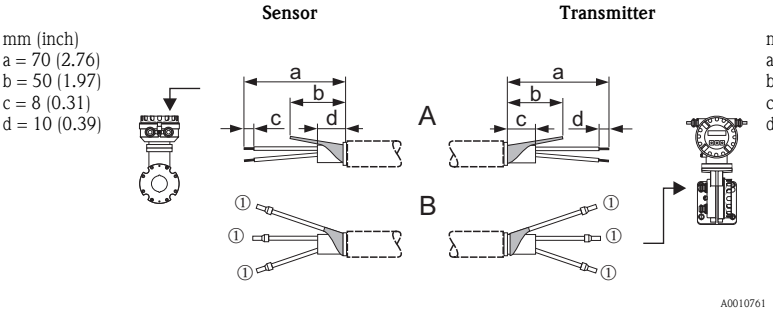

① = Cable end ferrules, red, ∅ 1.0 mm (0.04"); ② = Cable end ferrules, white, ∅ 0.5 mm (0.02")

3.2.2 Connecting cable connection

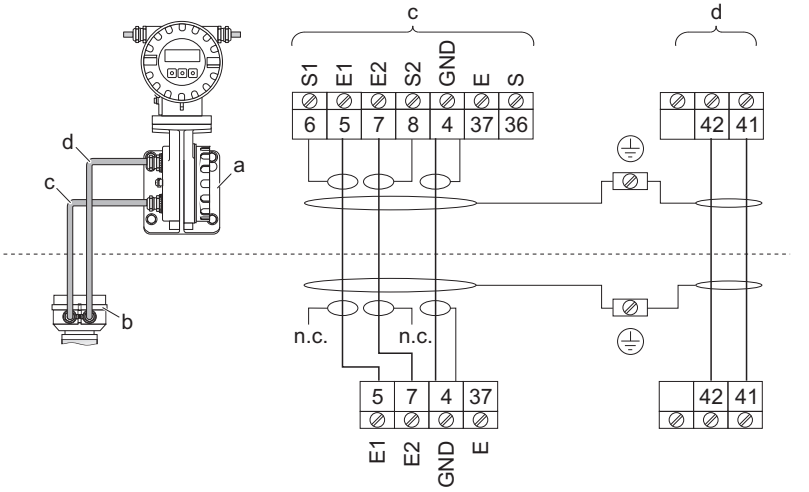

a Wall-mount housing connection compartment
b Sensor connection housing
c Signal cable
d Coil current cable

n.c. = not connected, isolated cable shields

Cable colors/numbers for terminals:
5/6 = brown
7/8 = white
4 = green

3.3 Potential equalization

Perfect measurement is only ensured when the fluid and the sensor have the same electrical potential. This is ensured by the two ground disks of the sensor.

The following should also be taken into consideration for potential equalization:
- Internal grounding concepts in the company
- Operating conditions, such as the material/grounding of the pipes, cathodic protection etc.

Standard situation
Potential equalization takes place via the ground terminal of the transmitter when using the device in the following pipes:
- Metal, grounded pipe
- Plastic pipe
- Pipe with insulating lining

✎ Note!
When installing in metal pipes, we recommend you connect the ground terminal of the transmitter housing with the piping.

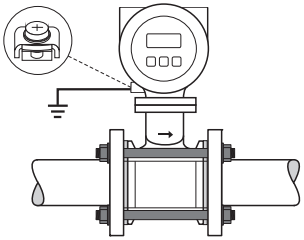

a0010702

✎ Note!
Potential equalization for other areas of application → Operating Instructions on the CD-ROM.

3.4 Degree of protection

The devices meet all the requirements for IP 67.

After mounting in the field or service work, the following points have to be observed to ensure that IP 67 protection is retained:
- Install the measuring device in such a way that the cable entries do not point upwards.
- Do not remove the seal from the cable entry.
- Remove all unused cable entries and plug them with suitable/certified drain plugs.
- Use cable entries and drain plugs with a long-term operating temperature range in accordance with the temperature specified on the nameplate.

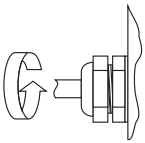

A0007549

Tighten the cable entries correctly.

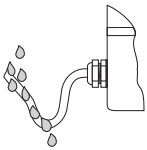

A0007550

The cables must loop down before they enter the cable entries ("water trap").

3.5 Post-connection check

- Are cables or the device damaged (visual inspection)?
- Does the supply voltage match the information on the nameplate?
- Do the cables used comply with the necessary specifications?
- Do the mounted cables have adequate strain relief and are they routed securely?
- Is the cable type route completely isolated? Without loops and crossovers?
- Are all screw terminals firmly tightened?
- Have all the measures for grounding and potential equalization been correctly implemented?
- Are all cable entries installed, firmly tightened and correctly sealed?
- Cable routed as a “water trap” in loops?
- Are all the housing covers installed and securely tightened?

4 Commissioning

4.1 Switching on the measuring device

On completion of the installation (successful post-installation check), wiring (successful post-connection check) and after making the necessary hardware settings, where applicable, the permitted power supply (see nameplate) can be switched on for the measuring device.

When the power supply is switched on, the measuring device performs a number of power-up checks and device self-checks. As this procedure progresses the following messages can appear on the onsite display:

Display examples:

PROMAG 10 **V XX.XX.XX**	Startup message

The measuring device starts operating as soon as the startup procedure is complete. Various measured values and/or status variables appear on the display.

✎ Note!
If an error occurs during startup, this is indicated by an error message.

4.2 Operation

4.2.1 Display elements

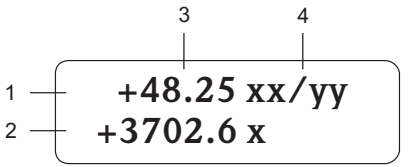

A0007557

Display lines/fields

1. Main line for primary measured values
2. Additional line for additional measured variables/status variables
3. Current measured values
4. Engineering units/time units

4.2.2 Operating elements

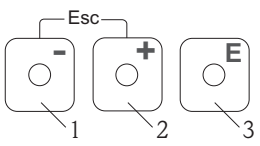

A0007559

Operating keys

1. (–) Minus key for entering, selecting
2. (+) Plus key for entering, selecting
3. Enter key for calling the function matrix, saving

When the +/– keys are pressed simultaneously (Esc):
- Exit the function matrix step-by-step:
- > 3 sec. = cancel data input and return to the measured value display

4.2.3 Displaying error messages

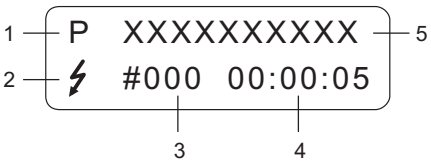

A0007561

1. Type of error:
   P = Process error, S = System error
2. Error message type:
   ϟ = Fault message, ! = Notice message
3. Error number
4. Duration of the last error that occurred:
   Hours: Minutes: Seconds
5. Error designation
   List of all error messages, see associated Operating Instructions on the CD-ROM

4.3 Navigating within the function matrix

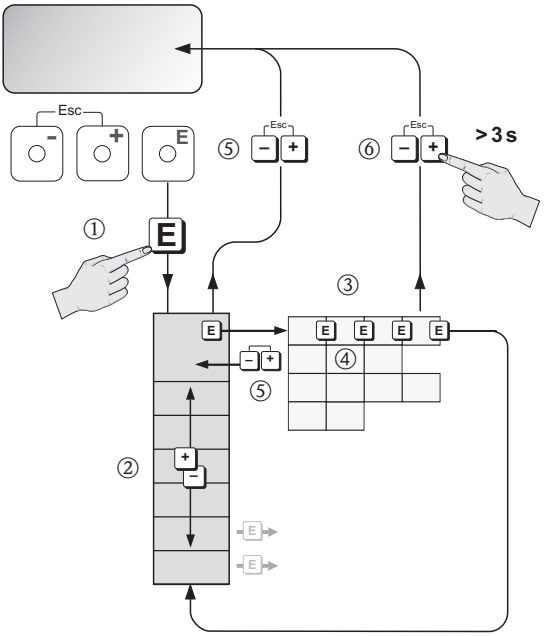

1. E → Enter the function matrix (starting with measured value display)
2. ± → Select the group (e.g. OPERATION)
   E → Confirm selection
3. ± → Select function (e.g. LANGUAGE)
4. ± → Enter code **10** (only for the first time you access the function matrix)
   E → Confirm entry

   ± → Change function/selection (e.g. ENGLISH)
   E → Confirm selection
5. ± → Return to measured value display step by step
6. ± > 3 s → Return immediately to measured value display

4.4 Device functions to be configured during commissioning

Check the values and settings of the device functions **not** marked gray in the following function matrix (UNIT VOL. FLOW, UNIT VOLUME, LANGUAGE, CURRENT RANGE etc.) and adapt them to your application.

A complete description of all the device functions is provided in the Operating Instructions on the CD-ROM.

Group	Device functions					
SYSTEM UNITS	UNIT VOL. FLOW	UNIT VOLUME	FORMAT DATE/TIME			
OPERATION	LANGUAGE	ACCESS CODE	DEFINE PRIVATE CODE			
USER INTERFACE	FORMAT	CONTRAST LCD	TEST DISPLAY			
TOTALIZER	SUM	OVERFLOW	RESET TOTALIZER			
CURRENT OUTPUT	CURRENT RANGE	VALUE 20 mA	TIME CONSTANT			
PULSE/ STATUS OUTP.	OPERATING MODE	PULSE VALUE	PULSE WIDTH	OUTPUT SIGNAL		
		ASSIGN STATUS	SWITCH-ON POINT	SWITCH-OFF POINT		
COMMUNICATION	TAG NAME	TAG DESCR.	BUS ADDRESS	HART WRITE PROTECT.	MANUFACTURER ID	DEVICE ID
PROCESS PARAM.	LOW FLOW CUT OFF	EPD	EPD ADJ.			
SYSTEM PARAM.	INSTALL. DIRECTION	MEASURING MODE	POS. ZERO RET.	SYSTEM DAMP.		
SENSOR DATA	CALIBRAT. DATE	K-FACTOR	ZERO POINT	NOMINAL DIAMETER	MEASURING PERIOD	EPD ELECTRODE
SUPERVISION	FAILSAFE MODE	ALARM DELAY	SYSTEM RESET	SELF CHECKING		
SIMULAT. SYSTEM	SIM. FAILSAFE	SIM. MEASURAND	VALUE SIM. MEASURAND			
SENSOR VERSION	SERIAL NUMBER	SENSOR TYPE				
AMPLIFIER VERS.	SW REV.					

4.5 Troubleshooting

A complete description of all the error messages is provided in the Operating Instructions on the CD-ROM.

✎ Note!
The output signals (e.g. pulse, frequency) of the measuring device must correspond to the higher-order controller.

www.endress.com/worldwide

Endress+Hauser

People for Process Automation

KA00036D/06/EN/13.15
71299364
FM+SGML 6.0

10.22 - E2-1 – EDI FINE BUBBLE DIFFUSER

aeration parts for all brands

DIFFUSER EXPRESS

Diffuser Express Parts & Tools

Installation, Operation & Maintenance

MANUAL

For:

T-Type Disc Diffusers

Environmental Dynamics International
5601 Paris Road
Columbia MO 65202

P: +1-573-474-9456
www.EnvironmentalDynamics.com

M-CP005D-EN
Rev A

Table of Contents

Table of Contents

Notice 1

Diffuser Spec Sheet 3

Storage Instructions 5

Receiving Inspection 5

Pre-Installation Storage Requirements 5

Post-Installation Storage Requirements for a Flexible Membrane System 5

Installation Instructions 6

FlexAir T-Series Installation 6

Leveling of Diffusers 6

Start-Up Instructions 7

General Aeration/Mixing Systems Start-Up Instructions 7

General Air Piping Inspection 7

Blower Components 7

Initial System Start-Up 7

Active Aeration Inspection 8

Optional Water Flush and Air Purge Cleaning of Piping 9

Water Flush Cleaning 9

Air Purge Cleaning 9

Safety Considerations 10

General Safety Considerations 10

Personal Protection Measures 10

Personal Protective Equipment 10

Confined Space Hazard 10

Operation Instructions 11

Description of the Aeration-Mixing System 11

Normal Operation of the Aeration System 11

Normal Operation of the Blower System 11

Shutdown Conditions 11

Normal Operation of the Diffuser Unit 11

Normal Operation of the Purge Assembly 11

Preventive Maintenance..... 12

Maintenance Schedule..... 12

In Situ Cleaning of Membrane..... 12

In Situ Acid Cleaning..... 12

Membrane Protection..... 12

Corrective Maintenance..... 13

Troubleshooting..... 13

Replacing Diffuser Assembly..... 13

EDI Services..... 14

Aeration Works..... 14

Field Service..... 16

Diffuser Express..... 18

Notice

This document and all information contained within is the property of Environmental Dynamics International. This document is submitted under a confidential relationship specifically for the recipient's use on a designated project. Reproduction of this document or use of its contents in whole or in part without the written permission of EDI is prohibited.

Blank Page

aeration for life

PRODUCT SPECIFICATIONS

FlexAir™ T-Series Tube Diffuser

Fine Bubble Flexible Membrane

- 62 mm and 91 mm diameter tube diffusers with standard length options from 250 mm to 1000 mm
- Choice of PVC or CPVC material diffuser tubes available
- Stainless Steel ¾" male pipe thread or plastic ¾" female pipe thread connections available
- Premium quality membranes available in EPDM, PU, PTFE Matrix™ or PTFE-coated, silicone, or other materials
- Triple-check design minimizes entry of liquid/solids into air feed piping
- High-capacity membrane option available for maximum airflow and low operating pressure
- Non-buoyant flo-thru design for reduced uplift and stress on mounting connection

Model	Membrane Performance	Design Airflow (membrane)		Overall Length (membrane)		Active Surface Area (membrane)		Dry Weight (diffuser)		Net Operating Buoyancy (diffuser)	
		scfm	m^3_N/h	in	mm	ft^2	m^2	lb	kg	lb	kg
Magnum 91–1003	Micro	0–20	0–32	39.5	1003	2.64	0.245	5.4	2.4	1.7	0.76
	High-Cap	0–35	0–55	39.5	1003	2.64	0.245	5.4	2.4	1.7	0.76
Magnum 91–762	Micro	0–15	0–24	30.0	762	1.97	0.183	4.3	2.0	1.2	0.55
	High-Cap	0–26	0–41	30.0	762	1.97	0.183	4.3	2.0	1.2	0.55
Magnum 91–502	Micro	0–9	0–15	19.8	502	1.25	0.116	3.1	1.4	0.73	0.33
	High-Cap	0–17	0–26	19.8	502	1.25	0.116	3.1	1.4	0.73	0.33
Standard 62–1003	Micro	0–13	0–21	39.5	1003	1.71	0.159	3.9	1.8	1.9	0.85
	High-Cap	0–23	0–36	39.5	1003	1.71	0.159	3.9	1.8	1.9	0.85
Standard 62–762	Micro	0–10	0–15	30.0	762	1.27	0.118	3.4	1.5	1.1	0.50
	High-Cap	0–17	0–27	30.0	762	1.27	0.118	3.4	1.5	1.1	0.50
Standard 62–650	Micro	0–8.0	0–13	25.6	650	1.07	0.099	3.2	1.4	0.76	0.35
	High-Cap	0–14	0–22	25.6	650	1.07	0.099	3.2	1.4	0.76	0.35
Standard 62–610	Micro	0–7.6	0–12	24.0	610	1.00	0.092	3.1	1.4	0.63	0.29
	High-Cap	0–13	0–21	24.0	610	1.00	0.092	3.1	1.4	0.63	0.29

FlexAir™ T-Series: Tube Membrane Diffuser

Processes:
Biological Aeration
Activated Sludge Processes
Oxidation Ditch
Sequence Batch Reactors (SBR)
Membrane Bio Reactors (MBR)
Moving Bed Bio Reactors (MBBR)
Sludge Stabilization/Digestion
Package Plants

Applications:
Municipal Wastewater
Industrial Wastewater
Fixed Grid Systems
Lift-Out Systems
Floating Systems
Tank Mixing
High Oxygen Transfer
Low Head Loss

Industries:
Food and Drink
Dairy and Cheese
Pulp and Paper
Oil and Gas
Animal Processing
Leachate
Energy and Power
Pharmaceutical

EDI has demonstrated success in more than 7,000 installations in over 100 countries worldwide—serving over 400 million people.

Please contact your local office below for details of our proven products, systems, and processes.

EDI Europe
Design, Manufacturing & Warehouse
Tel: +44-1295-810581
edi.Europe@EnvironmentalDynamics.com

Germany
Design Office
Tel: +49-(0)9073 921212
edi.Germany@EnvironmentalDynamics.com

France
Design Office
Tel: +33-(0)-781-548-529
edi.France@EnvironmentalDynamics.com

North America: Global Headquarters
Design, Manufacturing and Warehouse
Tel: +1-573-474-9456
edi.NorthAmerica@EnvironmentalDynamics.com

Mexico
Design Office
Tel: +1-877-334-2478
edi.Mexico@EnvironmentalDynamics.com

Singapore (SEA)
Design and Warehouse
Tel: +65-6521-4536
edi.Asia@EnvironmentalDynamics.com

China
Design Office
Tel: +86-10-5957-4336
edi.China@EnvironmentalDynamics.com

Japan
Design Office
Tel: +81-3-5789-9140
edi.Japan@EnvironmentalDynamics.com

India
Design and Manufacturing Office
Tel: +91-22-2422-4228
edi.India@EnvironmentalDynamics.com

© Environmental Dynamics International, Inc., All Rights Reserved.
Due to a policy of continued product development, Environmental Dynamics International, Inc. reserves the right to later amend any published specification without notice.

Storage Instructions

Receiving Inspection

R.2015-06-17

(FOB EDI only)
Inspect shipments for damage upon receipt. The recipient/receiver is responsible for all damages. EDI offers to act on behalf of the recipient / receiver in filing a claim for damage incurred during shipment. To file a claim against the freight company, a damage report must be submitted to EDI within 24 hours of delivery.

(FOB Jobsite only)
Inspect shipments for damage upon receipt. Any damages observed upon receipt must be noted with the freight company at the time of delivery and reported to EDI within 24 hours of delivery. EDI will repair or replace damaged goods when notified within this notification period.

(Ex-Works only)
Inspect shipments for damage upon receipt. The recipient/receiver is responsible for all damages. To file a claim against the freight company, file a damage report directly with the shipping company.

Note
A full inventory of shipped components shall be completed within 14 days of the receipt of shipment. Any deficiencies in the shipment that are clearly deemed to be the result of EDI will be reconciled by EDI when notified within this time period.

Pre-Installation Storage Requirements

R.2015-06-17

Pipe sections are furnished with end caps to minimize the entry of foreign materials (dirt, debris, etc.) into the pipe. Any foreign materials that are allowed to contaminate the pipe will need to be removed from the system prior to installation and start-up.

Piping Storage Requirements:

- Store Piping on a flat surface.
- Accessories must be protected from excessive moisture and rain.
- Storage is acceptable provided the ambient air temperature is below 140°F (60°C).
- Avoid impact loads and moisture when storing below 32°F (0°C).

Note
Piping and components are to be shaded from sunlight if stored for longer than 6 months.

Diffuser Storage Requirements:

- Boxes must be protected from excessive moisture and rain.
- Storage is acceptable provided the ambient air temperature is below 100°F (40°C).
- Shade or move Components indoors if the Ambient air temperature exceeds 100°F (40°C).
- Indoor storage is acceptable if the ambient air temperature does not exceed 125°F (52°C).

Note
Storage of diffuser membrane components shall be limited to one year.

Post-Installation Storage Requirements for a Flexible Membrane System

R.2015-06-17

If the reactor is drained and the aeration system is exposed for a short period of time (less than 4 weeks), the system shall be protected from foreign objects including but not limited to paint or weld splatter, falling objects, etc.

A gray fabric tarp should be suspended above the aeration system approximately 6” (150 mm) if the ambient air temperature is above 100°F (40°C).

Warning ⚠
Do not use any form of plastic to cover the aeration components. Plastic can create a hotter environment and/or fuse to the surface of the equipment.

If the aeration system is idle for an extended period time (greater than 4 weeks), the system should be submerged in approximately 4 feet of clean water provided the ambient air temperature is greater than 32°F (0°C).
If the ambient air temperature is below 32°F (0°C), the water level may need to be increased so that the ice layer does not contact the aeration system.

When reactivating a system where ice exists, operate the system at a minimum airflow to avoid movement of ice and maintain this airflow condition until the ice is no longer present. The water level should never be lowered if ice is present. The weight of the ice may damage the system

Installation Instructions

FlexAir T-Series Installation

R.2015-12-07

Inventory all parts to ensure no shortages and familiarize yourself with the layout drawings and installation details.

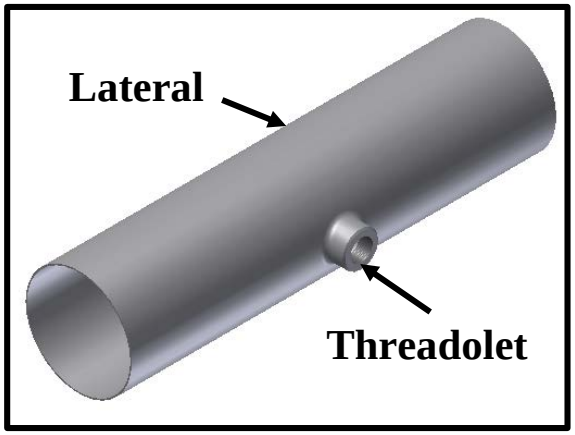

Note

PTFE thread sealant tape should be applied to all steel to steel threaded connections. EDI recommends Hercules Mega-Loc brand pipe dope on all plastic to plastic or plastic to steel threaded connections for lubricant and sealant (pipe dope containing PTFE is potentially damaging to plastic parts).

1) Apply thread sealant to the threads of the T-Series.
2) Insert the orifice plug into the T-series diffuser (if provided).

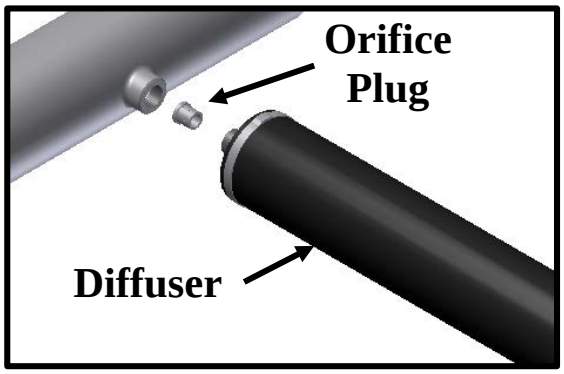

3) Thread diffuser into threadolet until hand-tight.

Note

The T-series diffuser should be oriented with the unperforated sections on top and bottom.

4) Repeat steps 1-3 for remaining diffusers.

Leveling of Diffusers

Air distribution through the aeration system is a function of the relative elevation of the individual aeration units and the leveling tolerance of the air supply piping. Excessive variation in pipe elevation (see Start-up Instructions) may result in poor air distribution during normal operation.

Start-Up Instructions

General Aeration/Mixing Systems Start-Up Instructions

R.2015-11-24

These instructions cover the general start-up requirements for the aeration system. Special start-up requirements outlined in the Engineer's specifications, contract documents, or instructions offered by EDI shall be supplementary to or take precedence over these general instructions.

General Air Piping Inspection

Contractor is to confirm the cleanliness of the air piping. If existing header piping is used, the air purge or water flush cleaning procedure is recommended prior to installation of diffuser units to remove any internal debris that may have accumulated in the header piping.

Inspect air piping and diffuser connections for loose fittings or damaged pipe. Damaged piping sections and connections should be repaired prior to commencing system operations.

Confirm that piping and diffusers are level by filling the basin with water until the diffusers are 1" to 2" under water. Diffuser elevation tolerance should be within the approved tolerance for the respective diffusers. Adjust supports as required to level the air supply piping (on which the diffusers are mounted) to within a tolerance of ±1/4".

Blower Components

See the blower installation and start-up instructions to assure all blower components are mounted properly and ready for operation. When EDI provides the blower assemblies, detailed installation and start-up instructions are provided in the blower submittal package.

Blower components should be fully installed and fully serviced prior to making final electrical connections and starting up the aeration system.

Precautions should be taken throughout system installation to minimize the discharge of airborne particles to the aeration system. As a minimum, an air inlet filter should be installed and operated during blower servicing procedures. EDI recommends a filter efficiency of 93% of 10-microns. Any solvents used to clean blower should be bypassed from the aeration piping. The discharge of airborne particulate matter or solvent into aeration piping may result in damage to diffuser membranes.

Upon completion of blower manufacturer's recommended service, the subsequent start-up procedures may be followed.

Initial System Start-Up

To start the system, completely open all valves in the air supply system, including blower shut-off valves, header valves and lateral isolation/throttling valves. This instruction assumes that uniform water level is present in all aerated basins served by a common blower. If varying water levels are present, basins with lower water levels will need to have the valve to that basin throttled back to avoid improper air distribution. Failure to completely open all valves may result in over-pressuring blower unit, release of pressure relief valve, motor overload, or poor air distribution in aeration system with the potential of exceeding airflow capacity to diffuser units and damaging the diffuser membranes.

Once valve positions have been confirmed, the blower unit may be started. EDI does not recommend starting multiple blower units at initial system start-up. Subsequent blowers should be brought on-line after the system has equalized and uniform diffuser activity is observed throughout the system.

Use the blower manufacturer's recommended start-up procedures. EDI recommends that initial pressure surge be reduced through PRV or blow-off valve.

Start-up procedures should follow the basic guidelines as listed below:

- When starting initial blower, the PRV or blow-off valve should be used to reduce the start-up pressure surge. This is accomplished by removing weights and the cap from the PRV or by opening the blow-off valve.
- When the basin has been filled, note the operating pressure at the blowers. The pressure relief valve should be adjusted to free-flow at approximately 1 psig above the normal operating pressure of the system.
- To confirm the PRV operates, partially close blower shut-off valve until PRV releases air. Reopen the shut-off valve to confirm that PRV will reseat. If required, readjust the PRV to the recommended setting per instructions in the Blower IOM manual.
- To properly assess the airflow distribution on the aeration system, the blower system must be operating at the design operating point. On dual blower systems, design airflow is typically achieved by operating one blower at 100%. On three-blower systems, design airflow is typically based on operating two blowers at 100%.
- Airflow distribution adjustment between aeration grids should not be conducted until the full operating depth is obtained and the blower system has been in operation for several days. Small adjustments may be made to the isolation/throttling valves on the laterals receiving the most air. System balancing should be completed on an incremental basis. Changes in airflow distribution may require 2-8 hours to fully

stabilize when fine-tuning a system. In addition, in situations where multiple basins are employed and varying water levels exist, adjustments of lateral valves will be required to maintain air distribution in the tanks.

EDI recommends that the system Operator contact EDI at 573-474-9456 prior to making any adjustments to the airflow distribution.

Active Aeration Inspection

With the blower system active, operate the aeration system at 50% design air capacity. At this setting, check piping and diffusers for obvious leaks, and repair as required. Open any manual purge valves to expel water that may be in the piping. Close the purge valves once all water has been expelled.

Check for minor leaks by completing the following steps:

- Turn the airflow down to very minimal release. If the system employs separate drop valves, each grid can be checked separately by throttling the valve one at a time. Again, take care not to exceed airflow capacities in neighboring aeration grids when reducing airflow by this method.
- The airflow will not be uniform at this low level. This is acceptable, as this test is only used to check for small leaks that are not visible with the design amount of airflow. Check for any observed leaks and repair as required.

Leaks commonly occur due to:

- Missing or misaligned O-ring
- Torn membranes
- Loose disc retainer ring

Optional Water Flush and Air Purge Cleaning of Piping

R.2015-06-17

These instructions cover the general procedure that may be used to clean the piping in a fine or medium bubble diffuser system prior to diffuser installation. Special pipe cleaning requirements outlined in the Engineer's specifications, contract documents, or instructions offered by EDI shall be supplementary to or take precedence over the general instructions outlined below.

If both water flush and air purge cleaning are used, the water flush procedure should be implemented first.

Water Flush Cleaning

To water-flush the system, connect a water supply to the air header or make individual connections to each lateral. If flush water is piped to the header, it is imperative that the header be valved or stubbed such that water does not flood the blowers.

Clean water must be used. It is not necessary to use potable water, but the flush water must be free of silt or debris.

Flush header assembly prior to water flushing the laterals. To flush the header, fill it with water and open the end lateral to create a flush velocity in the header of at least two feet per second.

The laterals are to be individually flushed at a recommended velocity of five to six feet per second. This is done by sequentially opening and closing the isolation valves on the individual laterals.

Opening one isolation valve will produce a significant flushing action in the lateral as water is pumped through the header. One or two drilled air outlet holes should be uncapped to allow water and debris to be flushed out of the piping.

As an alternative to using the main header/lateral flush procedure, the individual laterals may be cleaned independently of the main header. For this operation, the laterals are disconnected from the main header and cleaned individually.

Air Purge Cleaning

Remove weights and cap from the pressure relief valve during initial start-up of the system. This prevents potential damage to the blowers from blocked valves or obstructions in piping system. Cap and weights can be added back to the pressure relief valve as necessary to provide proper operating pressure capability.

Note

When a blow-off valve is provided for the blower system, it may be operated in lieu of using the pressure relief valve procedure listed above.

Open all lateral valves prior to start-up of the blowers. Provide an opening at the end of the air laterals to allow air and foreign materials to be discharged from the system. The opening may be made at the end of the air lateral by leaving the end cap off of the lateral or by removing two orifice/outlet plugs at the end of the lateral.

In order to increase the velocity of air through the header and air laterals, it may be desirable to operate at maximum blower capacity. In addition, it may be necessary to close some of the lateral throttling valves to achieve a high velocity through the balance of the laterals that are open to the atmosphere. A high velocity is required in order to blow out any accumulated foreign materials.

As laterals are consecutively cleaned, the isolation valves are operated in a manner that allows the remaining laterals to be cleaned by an air purge.

Upon completion of the air purge, the blowers are shut down and the laterals are capped. Diffuser units are installed on the laterals and all isolation valves are opened prior to filling the basin with water.

If only an air purge is used to clean the piping, the basins are now ready to be filled with water to check the operation of the diffuser units

Safety Considerations

General Safety Considerations

R.2015-06-17

The diffused aeration system supplied on this project has no moving parts and poses little to no risk of injury. However, routine maintenance may expose personnel to potential hazards. EDI has listed below potential hazards and recommended precautions when maintenance procedures are required for the aeration components.

Tank Hazards (at full liquid depth):

- *Turbulent liquid action.*

Precautions:

- *Provide access to emergency throw rope or life ring.*
- *Use buddy system and follow standard safety procedures.*

Tank Hazards (empty):

- *Falling into tank.*
- *Objects falling onto personnel in the tank.*
- *Slippery basin floor.*

Precautions:

- *Avoid access ways without railings.*
- *Provide emergency exit/access.*
- *Appropriate personal safety equipment*

Personal Protection Measures

Wastewater has a potential for health hazards because it may carry disease producing organisms and a variety of chemical wastes. It is important to employ good personal hygiene practices to prevent oral and skin contact with wastewater.

The following is a list of methods to prevent direct contact entry of pathogenic organisms:

- Wash hands frequently with soap and water after contacting wastewater, visiting restrooms, before eating, drinking, or smoking; and at the end of jobsite visit. When soap and water are not available use anti-bacterial hand wash specifically formulated for use when soap and water is not convenient.
- Promptly treat cuts and abrasions using appropriate first aid measures.
- Handle sharp items with extra care to prevent accidental injuries.
- Clean contaminated tools after use.
- Follow good common sense and exercise extra caution whenever there is contact with contaminated water or sludge.
- Never touch face, mouth, eyes, ears, or nose while working with wastewater or sludge.

Personal Protective Equipment

Wear heavy-duty gloves (or double gloving) and boots that are waterproof and puncture resistant. When practical, use thin disposable latex gloves for light work. Use reinforced rubber gloves for heavy activities.

Discard gloves that become torn and try not to submerge hand below top of glove during service activities. When it is not feasible to use gloves while installing or inspecting equipment, make sure to follow personal hygiene practice listed above.

Wear goggles in the presence of heavy aerosols, dust, or when splashing of wastewater might occur.

Wear protective clothing; if possible, shower and change clothes before leaving plant site. If work clothes are washed at home, separate from the family wash and use chlorine bleach.

Confined Space Hazard

Verify the designation of the tank before entering. Wastewater tanks or basins can be considered confined spaces and contain potential hazards. Flammable, explosive, toxic, or other hazardous substances or the absence of sufficient oxygen could cause injury, acute illness, disability, or death.

Particular care should be exercised to assure NO hydrogen sulfide, chlorine or other heavier than air gases have accumulated in the basins or tanks. DO NOT ENTER ANY CONFINED SPACE until your supervisor has verified that proper safety precautions have been met. Do not enter a confined space without someone else present on the outside and do not enter a confined space without proper rescue equipment outside the confined space. Every confined space entry has a unique set of hazards, but atmospheric monitoring and proper entrance procedures can minimize the hazards entry personnel typically encounter.

Operation Instructions

Description of the Aeration-Mixing System

R.2015-06-17

The aeration-mixing system employs a main air header and valved lateral piping system to distribute air throughout the basin. EDI normally designs the aeration system piping to provide uniform air distribution without adjustment to the isolation/throttling valves on the laterals. However, these valves are typically provided for direct control of airflow distribution on large aeration systems or for process control. If process demands dictate a revised airflow distribution pattern, contact EDI for guidance on modification to the system.

Normal Operation of the Aeration System

The following procedures should be followed on a regular basis to assure consistent and satisfactory performance of the aeration-mixing system.

The air rate to the system may be adjusted to maintain the desired dissolved oxygen levels in the basin. When adjusting the airflow rate, the diffusers should be operated within the normal operating range of the diffuser. Excessive airflow rates will result in high pressure drops across the diffuser and reduced oxygen transfer performance. Low airflow rates may result in incomplete utilization of the diffuser membrane and reduced air distribution.

The aeration-mixing system is designed to provide uniform aeration. Positive dissolved oxygen concentrations should be present throughout the entire system during normal operation.

A dissolved oxygen profile analysis may be used to confirm the performance of the aeration system. Typically, the dissolved oxygen levels are measured at the inlet, the outlet, and the midpoint locations of each basin to determine the aeration system performance. In regulating the system airflow to control dissolved oxygen levels, the diffuser units should be operated within their minimum and maximum airflow limits.

In applications where water level variations may exist between aeration basins supplied by a single blower, the isolation valves may need to be adjusted to maintain adequate airflow distribution. This normally requires valving back the air to the basin with the reduced water level.

Note

It is important to confirm the operating airflow range of the diffuser units before valving back any isolation valve. Damage could result to the aeration diffuser if airflow is above the recommendations noted in the Product Specification Sheet. Please consult EDI to confirm operating procedure before adjusting any aeration isolation/throttling valve.

Normal Operation of the Blower System

The Aeration-Mixing System normally utilizes a centrifugal or positive displacement (PD) blower system consisting of one or more blower units for normal operation plus one on-line spare unit. All blower units including the spare unit must be operated on a regular basis to maintain their proper working condition. EDI recommends that blower units be operated sequentially with idle blower units brought on-line weekly. EDI does not recommend the simultaneous operation of on-line and spare blowers for an extended period. This operating condition may deliver airflows exceeding the air capacity of the diffuser units.

All blower components should be serviced on a regular basis. For additional information concerning proper blower operation, service requirements or service intervals, reference the Blower Operation and Maintenance manual.

Shutdown Conditions

If air service is interrupted at any time, it should be restored as soon as possible. When restarting positive displacement blower units, the start-up pressure surge should be reduced by down-weighting the pressure relief valve (PRV) or operating the blow-off valve. Once the blower is operational, reset the PRV or slowly close the blow-off valve over a five- to ten-minute period. The PRV must be set properly to prevent overloading of the blower system. Operate manual water purge devices if provided. If the PRV releases air for an extended period of time, the relief setting should be checked.

Normal Operation of the Diffuser Unit

The diffuser unit has no moving parts and requires very little maintenance for long-term operation. EDI recommends that the air supply to the diffusers be maintained at all times for optimum performance. The airflow to the diffuser units must be kept within the ranges noted in the Product Specification Sheet to maintain the structural and operating characteristics of the diffuser membrane. Continuous application of high airflows, greater than denoted for normal operation, may result in physical damage to the diffuser membrane.

Note

Use caution when adjusting several lateral throttling valves in the same piping system. This procedure can result in elevated airflows in sections of the basin, exceeding the maximum allowable airflow to each diffuser unit.

Normal Operation of the Purge Assembly

Condensation will accumulate in the subheader and lateral piping due to the cooling of the air when it reaches the EDI aeration system. EDI has provided a purge assembly to remove this accumulation from the pipe while the system is in operation. If a manual purge assembly has been provided, open the ball valve at the top of the purge assembly on a monthly basis. Allow the water to exit through the valve until only air remains. Close the ball valve once the purging process has been completed.

Preventive Maintenance

Maintenance Schedule

R.2015-06-17

In order to be covered by the manufacturer's warranty the FlexAir aeration system must be maintained. EDI recommends to visually inspect the overall system and clean the membranes to remove any accumulated foulants on an annual basis. This activity is beneficial to the Owner, as a reduction in the uniformity of air release or an increase in backpressure will impact the power use. The FlexAir aeration system is designed to allow the system to be accessed by dropping the water level in the basin being serviced.

Note

To prevent solids from entering the system, it is important to keep the air flowing through the system until the water level has dropped below the lateral piping.

The air to the basin being serviced should be turned off after the water has dropped below the lateral piping and diffusers to prevent the possibility of excessive airflows to the units or damage to the blower unit.

The following items may be helpful in servicing the FlexAir aeration system during periodic inspections or maintenance procedures:

- Protective gloves and clothing
- Long-handled soft bristle brush for cleaning assembly for observation
- Spare FlexAir membranes

All system components should be inspected for general wear or damage. This includes but is not limited to:

- Pipe supports including anchor bolts, pipe straps and fasteners.
- Pipe connection including fasteners, shifts in alignment of pipes and joints.
- Diffuser assembly including position, membrane integrity, membrane clamps / retainer ring, etc.
- Purge assembly components including all connections, anchor points, and wear at any contact points.
- Any worn or damaged components need to be repaired or replaced. Please contact EDI for assistance in identifying a root cause and solution.

In Situ Cleaning of Membrane

Typically membrane diffuser units will require cleaning because of two common types of surface build-up; biological and inorganic scaling.

Biological build-up is a moss-like growth. The recommended cleaning procedure is to physically dislodge the growth either by gently brushing the substance off with a soft plastic bristle brush or by using low-pressure hosing. Care should be taken not to abrade the rubber membrane surface during the cleaning procedure.

In Situ Acid Cleaning

When standard cleaning methods do not produce desired results, inorganic scaling may be present and may require an alternate cleaning technique. Inorganic scaling is a granular mineral-like precipitate that can form on the membrane surface.

Warning ⚠

Read all applicable SDS (Safety Data Sheets) carefully and follow all instructions given therein. Always have new users familiarize themselves with the SDS before handling chemicals. Wear personal protective equipment (including, but not limited to, rubber gloves, safety goggles, and other protective clothing) as required.

The foulant adhered to a membrane can be tested with a solution of muriatic acid (20° Baume Hydrochloric Acid, 31.45% by weight HCl) for reactivity. This may indicate the nature of the foulant and its propensity for chemical cleaning. Ensure that the air supply has been turned off from the diffusers being serviced. Afterwards, place a small amount of acid on the surface of the membrane where fouling is most prevalent. If the foulant is reactive to acid, this is indicative of inorganic fouling, such as calcium deposits, and acid cleaning is recommended. Otherwise, the foulant is typically organic and acid cleaning may not prove effective.

If it is determined that the foulant does respond to acid, the membrane may be cleaned with acid in addition to manual cleaning. This technique involves applying Muriatic Acid directly to the membrane surface after the manual cleaning procedure followed by rinsing with a low-pressure hose. In the case of ceramic diffusers, the acid is typically applied both on the surface and pumped through the diffuser using air.

Note

EDI can provide an acid injection system, upon request, for cleaning aeration systems without process interruptions. Contact EDI for more information.

Membrane Protection

The diffuser membranes should be protected from chemicals that may be harmful to the material. If using a cleaning aid or other substance on or around the membranes, please contact EDI for chemical compatibility.

Corrective Maintenance

Troubleshooting

R.2015-06-17

The FlexAir aeration system requires very little maintenance for long-term operation. Periodic visual inspection of the system should allow the Operator to determine if the system is performing at optimum levels.

Operating airflows below the design condition will also reduce the uniformity of air distribution. If operating conditions warrant airflow rates below the design condition, contact EDI for additional operational guidelines.

Below are symptoms and procedures to follow if inspection of the aeration system reveals abnormal operating characteristics:

Large volume of air in localized area	
Possible Cause	**Procedure**
Air leak in aeration piping.	Access area in question. Inspect joints for evidence of breakage.
Diffuser membrane damaged or missing.	Inspect diffuser units for membrane damage. Repair as required.

Decreased diffuser activity and increased back pressure noted at blower	
Possible Cause	**Procedure**
Diffusers becoming fouled or deformed.	Access diffusers and inspect for external or internal fouling or deformation.
Reduced blower discharge air volume.	Confirm blower operating point and rpm reading.
Restriction in air header.	Confirm isolation valve position on header and drops.

Dissolved oxygen profile not satisfactory throughout basin	
Possible Cause	**Procedure**
Increased loading to system.	Confirm loading to system.
Reduced blower discharge air volume.	Confirm blower operations.
Improper distribution of air in system.	Inspect piping for leaks, both in-basin piping and out of basin piping leading from the blower system.
Air leak in system.	
Excessive foulant accumulated on diffuser.	Access diffusers and inspect for external fouling.

Replacing Diffuser Assembly

R.2015-12-15

If routine inspections reveal the need to replace a diffuser assembly, revert back to the installation instructions for the removal and reinstallation of components. Any parts damaged during removal should be replaced.

Questions regarding the aeration-mixing system operation, maintenance, etc. should be forwarded to Environmental Dynamics International, 5601 Paris Road, Columbia, Missouri 65202. +1(573)474-945

AerationWorks™

Global Maintenance & Installation Services

Customer Support Services

- **Install New Aeration Systems**
- **Maintain or Refurbish Existing Aeration Systems**
- **Develop and Implement Long-Term Maintenance Programs**
- **Service and Support for all Brands of Aeration Systems**

"The EDI Aeration Works division provides experts in the installation and maintenance of any aeration system, including supervision and/or the skilled labor pool to perform the actual service"

- Chuck Tharp, PE
Chairman • Environmental Dynamics Inc.

Aeration Works maintains special equipment, tools and skilled crews for installation and service on any aeration construction or maintenance project.

Contractors, owners and operating companies can better utilize their own personnel, equipment and resources by enlisting the support of the EDI Aeration Works Division.

EDI Aeration Works personnel have the experience and knowledge to handle unique systems and offers a cost effective alternative for installation and maintenance of your aeration system.

AerationWorks™
Global Maintenance & Installation Services

5601 Paris Road • Columbia, MO 65202 • USA

+1 877.EDI.AIR8 (334-2478)
info@aerationworks.com

Environmental Dynamics International

Service Department

Quality In-House & On-Site Customer Service

EDI provides Field & Customer Service directly from its worldwide headquarters located in Columbia, Missouri, while maintaining Authorized Field Service offices around the globe.

Services may include visits made by an Authorized EDI Service Representative to a project site and may provide any or all of the following:

Train on-site personnel in the proper installation and assembly of all EDI equipment.

Inspect installation to provide verification of general conformance to EDI specifications and requirements.

Provide startup services to ensure that the equipment is operating satisfactorily after installation.

Train plant Owners/Operators in long term operation and maintenance procedures for the EDI equipment that has been installed.

Provide troubleshooting investigation or inspection when requested by the customer, with regards to EDI equipment installation

In addition to the highest quality products and services, EDI is pleased to offer superior Customer & Field Services. EDI strives to provide these services in the most convenient and cost effective manner to ensure the greatest benefit to its customers. EDI is able to provide these services directly with its Service personnel located within the EDI Headquarters in Columbia, Missouri, as well as maintaining localized Authorized Field Services offices Worldwide.

EDI highly recommends the purchase of field service with any EDI system purchase.

Our experience has shown that an inspection provided by an Authorized EDI Field Service Representative can eliminate potential costs incurred by the customer from failures due to preventable installation errors.

In order to allow reasonable scheduling and to ensure an EDI representative is available, at least a three week notice is needed when requesting service.

Should you have any questions regarding EDI Field Services or if you would like to request a quote, please feel free to contact the EDI Service Manager, Ms. April Heywood at 573-474-9456. As always, EDI provides telephone and email support at any time at no additional charge.

Environmental Dynamics International

Service Department

5601 Paris Road • Columbia, MO 65202 • USA

+ 1 877.EDI.AIR8 *(334-2478)*

service@wastewater.com

DIFFUSER EXPRESS®

Aeration parts for all brands

- Express service
- Wide variety of parts
- Competitive pricing
- Specialty items
- Membrane replacements

Got diffusers?

High-quality, aftermarket wastewater aeration parts

Diffuser Express (DX) products will keep your aeration system at the front edge of technology. DX stocks a multitude of high-quality aftermarket replacement membranes and parts to upgrade your existing system for improved operational efficiency or increased capacity.

When application know-how or total system design assistance is required, Diffuser Express can serve as a direct link to EDI's Application Engineering Group. From here, you will benefit from the vast aeration and biological treatment expertise that EDI has amassed from servicing customers around the world since 1975.

Visit www.DiffuserExpress.com to download our parts catalog and discover all the benefits!

EDI® aeration for life®

10.23 - E2-2 – EDI COARSE BUBBLE DIFFUSER

www.DiffuserExpress.com

Installation, Operation and Maintenance Manual

For the

MaxAir™ Diffuser Units

Diffuser Express is a Division of Environmental Dynamics International
5601 Paris Road, Columbia, Missouri 65202
1-800-683-6099 E-mail: EDI@wastewater.com
www.wastewater.com

EDI MaxAir™ Diffuser Features

- Factory assembled
- 12 and 24 inch long diffuser assemblies and 3/4 inch diameter threaded mounting connection
- Integral hex nut on the cast inlet end and cast discharge end plate.
- Full drainage of entrapped water in air supply piping
- Maximum structural integrity

Installation & Start-Up

General

These instructions cover the installation requirements of the EDI Maxair™ diffuser. Special installation requirements outlined in the Engineer's specifications, contract documents or instructions offered by EDI shall be supplementary to or take precedent over the instructions outlined below.

Installation Instructions for the MaxAir™ Diffusers

General

The MaxAir diffuser units are furnished completely factory assembled. The only work required by the Contractor is the installation and placement of the diffuser units on the lateral in the basin. If units are to be stored before installation, EDI recommends utilizing the original unopened shipping cartons. Store in a clean, cool location that avoids potential mechanical damage. Air distribution through the MaxAir system is a function of the individual diffuser elevation. For proper system operation, EDI recommends a leveling tolerance of ±1/2" for the diffusers. If the diffusers are mounted with excessive elevation tolerances, the airflow distribution in the system will be adversely impacted.

Shipment/Storage of Equipment

- Upon delivery, check equipment for structural damage during shipment. Damages must be reported to EDI within 10 days of delivery.
- All aeration system piping and diffusers must be stored in such a manner as to prevent any deformation resulting from flexing, cracking or rusting. Contractor shall insure that the stored equipment is properly stacked to avoid warpage, has adequate cover and ventilation to avoid exposure to the heat of the day or direct sunlight. EDI recommends utilizing the original unopened shipping cartons.

Installation Instructions for the MaxAir Diffusers

1. It is recommended to use pipe joint compound on the threaded nipple connections attached to the MaxAir.

Figure 1

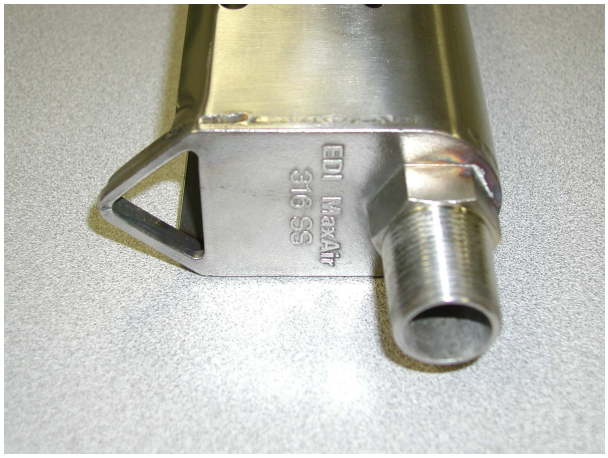

2. Apply pipe joint compound to the threads on MaxAir end of the nipple. (Reference Figure 1.)

3. Note that Cast tee is not used in this installation and is used in these instructions for reference. Thread the nipple into the orifice (see Figure 2). Thread approximately 5 to 6 threads into the unit. Hand tightening of the MaxAir diffuser onto the cast tee may be necessary to achieve proper thread engagement.
   NOTE: Care should be taken during installation of the MaxAir to ensure that the nipple is not cross-threaded into the pipe.

Figure 2

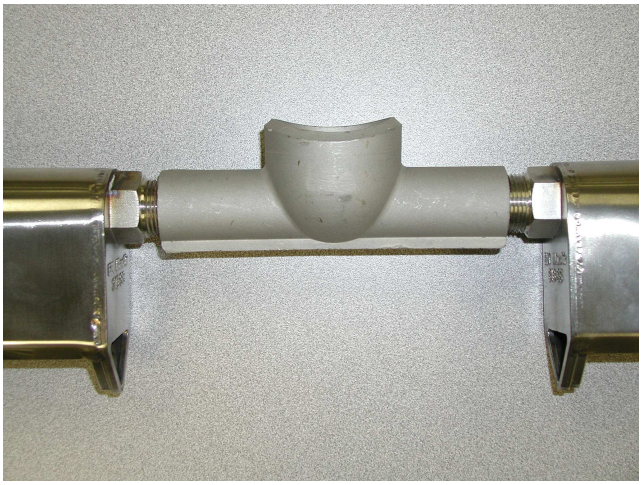

4. The threaded diffuser unit has no moving parts and requires very little maintenance for long term operation. The MaxAir units are attached to the pipe/tee as seen in Figure 2. It is recommended that the air supply to the diffusers be maintained at all times for optimum performance. The airflow to the diffuser units must be kept within the ranges summarized in Table 1 to assure the long term operating characteristics

of the diffuser. Continuous application of high airflows, greater than denoted for normal operation may result in physical damage to the diffuser. Maximum airflows should not be exceeded. **NOTE**: Use caution when adjusting several lateral throttling valves in the same piping system. This procedure can result in elevated airflows in sections of the basin, exceeding the maximum allowable airflow to each diffuser unit.

Leveling of Laterals and Diffuser Units

- MaxAir units are to be leveled to ± 1/2" from a common elevation. The basin water level, transit or laser may be utilized to establish the proper pipe elevations.

When blower assemblies, header piping, air laterals, and all units are properly installed, system is ready for start-up. Refer to "MaxAir Start-up Instructions" for details.

(OPTIONAL) Water Flush and Air Purge Cleaning of Piping

These instructions cover the general procedure which may be utilized to clean the piping in a coarse bubble diffuser system. Special pipe cleaning requirements outlined in the Engineer's specifications, contract documents, or instructions offered by EDI shall be supplementary to or take precedent over the general instructions outlined below.

Water Flush Cleaning

- Water flush cleaning is the recommended method to clean assembled piping systems where pipe segments are too long for manual cleaning. This procedure can be used in conjunction with air purge cleaning and is recommended when fine debris is not removed prior to assembly of piping. When both water flush and air purge are used, the water flush procedure should be implemented first.
- To water flush the system, connect a water supply to the air header or make individual connections to each lateral. If flush water is piped to the header, it is imperative that the header be valved or stubbed such that water does not flood the blowers.
- Clean water must be used. It is not necessary to use potable water but the flush water must be free of silt or debris.
- Flush header assembly prior to water flushing the laterals. To flush the header, fill it with water and open the end lateral to create a flush velocity in the header of at least two feet per second (if possible).
- Next, the laterals are to be individually flushed at a recommended velocity of five to six feet per second. Opening one isolation valve will produce a significant flushing action in the lateral as water is pumped through the header. The lateral end cap or one or two drilled air outlet holes should be uncapped to allow water and debris to be flushed out of the piping. The plugs on the air outlet holes should be removed to clean all of the feeder airlines on the lateral.
- The cleaning procedure in the previous step should be completed for each of the laterals. This is done by sequentially opening and closing the isolation valves on the individual laterals.
- As an alternate to using the main header/lateral flush procedure, the individual laterals may be cleaned independent of the main header. For this operation, the individual laterals are disconnected from the main header and cleaned individually.

Air Purge Cleaning

- Remove weights and cap from the pressure relief valve during initial start-up of the system. This eliminates potential damage to the blowers from blocked valves or obstructions in piping system. Cap and weights can be added back to the pressure relief valve as necessary to provide proper operating pressure capability.
- **NOTE**: When a blow-off valve is provided for the blower system, it may be operated in lieu of using the pressure relief valve procedure listed above.
- Open all lateral valves prior to start-up of the blowers. Provide an opening at the end of the air laterals to allow air and foreign materials to be discharged from the system. The opening may be made at the end of the air lateral by leaving the end cap off of the lateral or by removing two feeder airline plugs at the end of the lateral.
- In order to increase the velocity of air through the header and air laterals, it may be desirable to operate at maximum blower capacity. In addition, it may be necessary to close some of the lateral throttling valves to achieve a high velocity through the balance of the laterals that are open to the atmosphere. A high velocity is required in order to blow out any accumulated foreign materials.
- As laterals are consecutively cleaned, the isolation valves are operated in a manner that allows the remaining laterals to be cleaned by an air purge.
- Upon completion of the air purge, the blowers are shut down and the laterals are capped. MaxAir units are installed on the end of the feeder airlines and all isolation valves are opened prior to filling the basin with water.
- If only an air purge is used to clean the piping, the basins are now ready to be filled with water to check the operation of the diffuser units.

Start Up

General Aeration/Mixing Systems Start-up Instructions

These instructions cover the general start-up requirements for the EDI MaxAir system. Special start-up requirements outlined in the Engineer's specifications, contract documents, or instructions offered by EDI shall be supplementary to or take precedent over these general instructions.

An overview of Start-up procedures is related below:

- Confirm that piping and diffusers are level by filling the basin with water. Adjust supports or diffusers as required.
- Continue filling the basin with water until the diffusers are 1" to 2" under water. In the event of air leaks, the diffusers are accessible.
- Activate the blower and introduce air to the MaxAir system. Check piping and diffusers for leaks, and repair if required.
- While maintaining air to the system, continue filling the basin until the design depth is reached.

Blower Components

Reference the blower installation and start-up instructions to assure all blowers components are mounted properly and ready for operation. When EDI provides the blower assemblies, detailed installation and start-up instructions are provided in the blower submittal package.

Blower Installation and Service

- Blower components should be fully installed and fully serviced prior to making final electrical connections and starting up the MaxAir aeration system.
- Precautions should be taken throughout system installation to minimize the discharge of airborne particles to the aeration system. As a minimum, air inlet filter should be installed and operated during blower servicing procedures. EDI recommends a filter efficiency of 99.5% removal of 2 micron particles and larger. Any solvents used to clean blower should be bypassed from the aeration piping.
- The discharge of airborne particulate matter or solvent into aeration piping may result in damage to diffuser membranes.
- Upon completion of blower manufacturer's recommended service, the subsequent start-up procedures may be followed.

General Air Piping

Contractor is to confirm the cleanliness of the air piping. If existing header piping is used, the air purge or water flush cleaning procedure is recommended prior to installation of diffuser units to remove any internal debris that may have accumulated in the header piping. Inspect air piping and diffuser connections for loose fittings, or damaged pipe. Damaged piping sections and connections should be repaired prior to commencing system operations.

Initial System Start-Up

- To start-up the system, completely open all valves in the air supply system, including blower shut-off valves, header valves and lateral isolation/throttling valves. This instruction assumes that uniform water level is present in all aerated basins served by a single blower. If varying water levels are present, basins with lower water levels will need to be valved back to avoid improper air distribution. Failure to completely open all valves may result in over-pressuring blower unit, release of pressure relief valve, motor overload, or poor air distribution in aeration system with the potential of over-pressuring diffuser units and damaging the diffuser membranes.
- Once valve positions have been confirmed, blower unit may be started up. EDI does not recommend starting up multiple blower units at initial system start-up. Subsequent blowers should be brought on-line after the system has equalized and uniform diffuser activity is observed throughout the system.
- Use recommended blower manufacturers start-up procedures. EDI recommends that initial pressure surge be reduced through PRV or blow-off valve.
- Start-up procedures should follow the basic guidelines as listed below:
    a. When starting up initial blower, the PRV or blow-off valve should be used to reduce the start-up pressure surge. This is accomplished by removing weights and the cap from the PRV or by opening the blow-off valve.
    b. When the basin has been filled, note the operating pressure at the blowers. The pressure relief valve should be adjusted to free-flow at approximately 1 psig above the normal operating pressure of the system.
    c. To confirm the PRV operates, partially close blower shut-off valve until PRV releases air. Reopen the shut-off valve to confirm that PRV will reseat. If required, readjust the PRV to the recommended setting per instructions in the Blower IOM manual.

- To properly assess the airflow distribution on the aeration system, the blower system must be operating at the design operating point. On dual blower systems, design airflow is typically achieved by operating one blower at 100%. On three blower systems, design airflow is typically based on operating two blowers at 100%.
- Airflow distribution adjustment between laterals should not be conducted until the full operating depth is obtained and the blower system has been in operation for several days. Small adjustments may be made to the isolation/throttling valves on the laterals receiving the most air. System balancing should be completed on an incremental basis. Changes in airflow distribution may require 2-8 hours to fully stabilize when fine-tuning a system. In addition, in situations where multiple basins are employed and varying water levels exist, adjustments of lateral valves will be required to maintain air distribution in the tanks. EDI recommends that the system Operator contact the **Engineering Department of EDI at 573-474-9456** prior to making any adjustments to the airflow distribution.

Operation Instructions

Description of the MaxAir Aeration-Mixing System

The MaxAir aeration-mixing system employs a main air header and valved lateral piping system to distribute air throughout the basin. EDI normally designs the aeration piping system to provide uniform distribution of air without requiring adjustment of the isolation/throttling valves on the laterals with the exception in situations where water level variation exists. However, these valves are typically provided for direct control of airflow distribution on large aeration systems or for process control. An EDI field service representative will review airflow distribution at the time of start-up. If process demands dictate a revised airflow distribution pattern, contact EDI for guidance on modification to the system.

Normal Operation of the Aeration System

The following procedures should be followed on a regular basis to assure consistent and satisfactory performance of the MaxAir aeration-mixing system.

- If the system continuously requires high air flow-rates to address process demands, additional treatment facilities or diffusers may be required. In situations where localized high air flow-rates are required, adjustment to the number of diffusers per zone or section of the tank may be warranted. Contact EDI for engineering support in evaluating system operations or modifications.
- The MaxAir aeration-mixing system is designed to provide uniform aeration. Positive dissolved oxygen concentrations should be present throughout the entire system during normal operation. A dissolved oxygen profile analysis may be used to confirm the performance of the aeration system. Typically, the dissolved oxygen levels are measured at the inlet, the outlet, and the midpoint locations of each basin to determine the aeration system performance. In regulating the system airflow to control dissolved oxygen levels, the diffuser units should be operated within their minimum and maximum airflow limits.

Varying Water Level Operations

In applications where water level variations may exist between aeration basins supplied by a single blower, the isolation valves may need to be adjusted to maintain adequate airflow distribution. This normally requires valving back the air to the basin with the reduced water level. **NOTE**: It is important to confirm the operating airflow range of the diffuser units before valving back any isolation valve. Damage could result to the aeration diffuser if airflow is above the recommendations listed in Table 1. Please consult EDI Engineering Department to confirm operating procedure before adjusting any aeration isolation/throttling valve.

Trouble Shooting

The MaxAir aeration system requires very little maintenance for long-term operation. Periodic visual inspection of the system should allow the Operator to determine if the system is performing at optimum levels. For example, diffuser unit elevation variations greater than the design tolerance, typically ± 1", will reduce the uniformity of air distribution in the system. In addition, operating airflows below the design condition will also reduce the uniformity of air distribution. If operating conditions warrant airflow rates below the design condition, contact EDI for additional operational guidelines.

Below are symptoms and procedures to follow if inspection of the aeration system reveals abnormal operating characteristics:

1. Large volume of air in localized area

   Possible Cause:
   a. Air leak in aeration piping.

   Procedure:
   a. Drain basin to access area in question. Maintain airflow to units. Inspect joints for evidence of breakage.

2. Decreased diffuser activity and increased back pressure noted at blower.

   Possible Cause:
   a. Diffusers becoming fouled.
   b. Reduced blower discharge air volume.
   c. Restriction in air header.

   Procedure:
   a. Access diffusers and inspect for external fouling.
   b. Confirm blower operating point and rpm reading.
   c. Confirm isolation valve position on header and drops.

Normal Operation of the Blower System

The MaxAir Aeration-Mixing System normally utilizes a centrifugal or positive displacement (PD) blower system consisting of one or more blower units for normal operation plus one on-line spare unit. All blower units including the spare unit must be operated on a regular basis to maintain their proper working condition. EDI recommends that blower units be operated sequentially with idle blower units brought on-line weekly. EDI does not recommend the simultaneous operation of on-line and spare blowers for an extended period. This operating condition may deliver airflows exceeding the air capacity of the diffuser units.

- All blower components should be serviced on a regular basis. For additional information concerning proper blower operation, service requirements or service intervals, reference the Blower Operation and Maintenance manual.

Shutdown Conditions

If an interruption in air service is experienced at any time, restoration of air service should be instituted as soon as possible. When restarting positive displacement blower units, the start-up pressure surge should be reduced by down-weighting the pressure relief valve (PRV) or operating the blow-off valve. Once the blower is operational, reset the PRV or slowly close the blow-off valve over a five to ten minute period. The PRV must be set properly to prevent overloading of the blower system. Operate water purge devices if provided. If the PRV releases air for an extended period of time, the relief setting should be checked.

- If the basin is to be idle for a prolonged time period, the basin should be drained and cleaned. **NOTE**: Maintain the minimum airflow to the system during the drain down procedure. For maximum protection of the aeration system, refill the basin to completely submerge the aeration system. This provides thermal protection in the event of severe cold or hot weather conditions.
- Contact EDI for additional operation and maintenance information if it is necessary to decrease the system airflow during cold weather.

Operation of the MaxAir Diffuser

The MaxAir unit has no moving parts and requires very little maintenance for long term operation. EDI recommends that the air supply to the diffusers be maintained at all times for optimum performance. The airflow to the MaxAir units must be kept within the ranges summarized in Table 1 to allow for designed operating conditions. **NOTE**: Use caution when adjusting several lateral throttling valves in the same piping system. This procedure can result in elevated airflows in sections of the basin, exceeding the maximum allowable airflow to each MaxAir unit.

Table 1: Recommended Airflows for MaxAir Units

	Normal Operating Condition (SCFM)	Maximum Operating Condition (SCFM)
MaxAir diffuser – 12”	3 to 18	30
MaxAir diffuser – 24”	5 to 36	55

Maintenance For Aerated Basins

Maintenance of the MaxAir Diffuser

The following guidelines should be referenced in maintaining the MaxAir diffuser system

- Good air filtration is required with all MaxAir units. The blower system should be equipped with inlet filters having a performance efficiency of 99.5% removal of 2 micron particles to prevent clogging of the diffuser membrane.
- The inlet filters of the blower system should be changed before the inlet filter headloss reaches 20 inches water column. This headloss is normally measured with a spring-type gauge mounted on the filter housing or with a water manometer. Improper maintenance of the air filtering system may overload the blower system due to a high inlet loss or may result in reduced filtration efficiency which could lead to diffuser clogging.
- Surface deposits or slime may build-up on the diffuser units over time. This material typically does not impact the operations of the diffuser. In applications where a large amount of material exists, a significant amount of debris may accumulate on the unit. This material should be removed on a regular basis to avoid mechanical damage to the diffuser unit.

Accessing the MaxAir Diffuser Assembly

EDI recommends accessing the MaxAir units on a regular basis (annually) to visually inspect the units. The MaxAir aeration system is designed to allow the diffuser units to be accessed by dropping the water level in the basin being serviced. The air to the basin being serviced should be turned off to prevent the possibility of excessive airflows to the units or damage to the blower unit. The following items may be helpful in servicing the MaxAir diffuser assemblies during periodic inspections or maintenance procedures:

- Ladder to access the de-watered basin
- Protective gloves and clothing
- Long-handled bristle brush for cleaning assembly for observation

- A moss like growth characterizes biological build-up. The recommended cleaning procedure is to physically dislodge the growth either by gently brushing the substance off or by using low pressure hosing.

Replacing MaxAir Diffuser

If it becomes necessary to replace an entire MaxAir assembly, the general procedures outlined below should be followed:

- Unthread the MaxAir assembly from the piping. Replace MaxAir assembly by applying pipe dope prior to threading replacement assembly.
- Hand tighten assembly three to four threads from unit.

Properly operated and maintained, the MaxAir aeration and mixing system will provide years of high efficiency treatment with minimum operator attention. Questions regarding MaxAir system operation, maintenance, etc. should be forwarded to the **Environmental Dynamics International, 5601 Paris Road, Columbia, Missouri 65202. (573) 474-9456.**

Manufacturer's Services

Field Service

Installation Instructions and Start-Up Services are part of the personalized service provided by EDI on most installations. The specific services offered by EDI are defined in the EDI proposal.

An EDI Field Representative is normally available at the time of equipment delivery to review the equipment and installation details plus answer installation questions. Warnings, constructive comments and special installation instructions will be given to the Contractor concerning specific aspects of this project such as piping layout and fabrication, anchoring systems and diffuser layout.

Start-up service and operation instructions (commissioning) consist of an on-site visit when the system is ready to be placed into operation. An EDI Representative will conduct a final system inspection and oversee the initial blower start-up (if blowers provided by EDI). Instructions will be given to the Operator and other interested parties concerning operation and maintenance of the system and system components provided by EDI.

EDI requires a minimum of at least three weeks prior notice to schedule personnel and travel for field service trips. If reasonable lead times can not be provided to EDI, any additional incurred expenses associated with emergency travel schedules, overtime or other unplanned activities will be the responsibility of, and invoiced directly to, the Contractor.

EDI requires Contractor to contact and confirm all field service requests 48 hours prior to scheduled site visit. Failure to do so will result in trip cancellation.

Environmental Dynamics, Inc. is interested in its systems equipment in all phases of the project from installation to long-term performance. EDI will provide telecommunication assistance at any time without additional cost. EDI's field service practice has been and will continue to be to contact and visit existing installations when our travel plans bring us to that area. These visits are made at no cost to the owner.

Please contact **Environmental Dynamics at 573-474-9456** to schedule delivery, service trips or for questions regarding EDI High Efficiency Aeration-Mixing Systems.

10.24 - F1 – FLOW + BALL VALVE

2-PC Full Port SS 1000 PSI Ball Valve

Pressure Rating: 1000 psi (69 bar) WOG for 1/4" to 2"

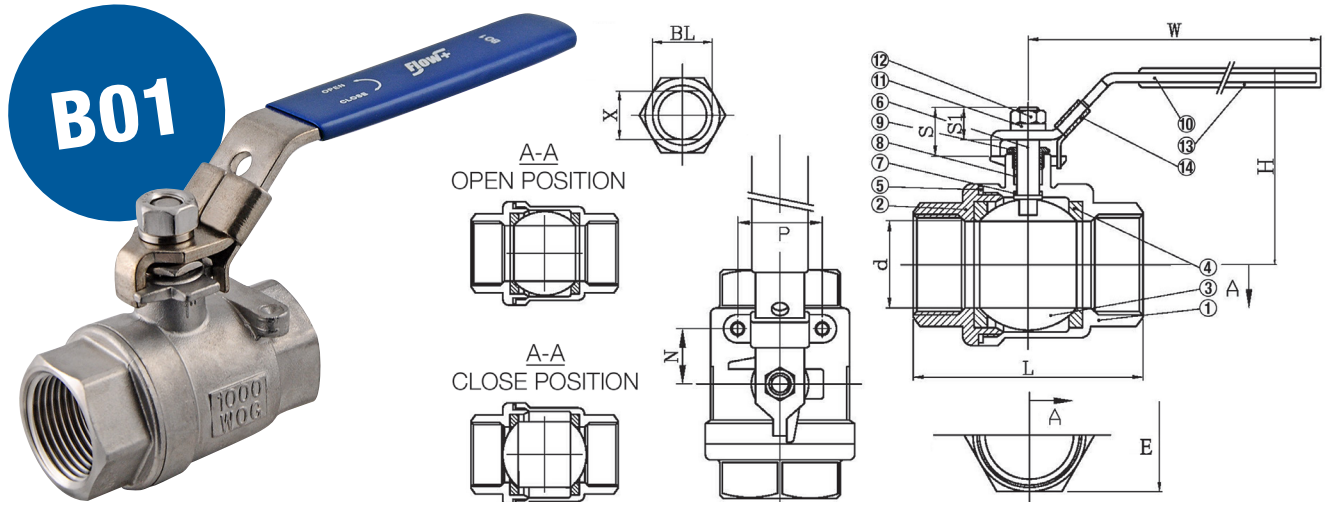

No.	Part (Qty)	Material
1.	Body (1)	ASTM-CF8M-A351
2.	End (1)	ASTM-CF8M-A351
3.	Ball (1)	ASTM-CF8M-A351
4.	Ball Seat (2)	15% R-PTFE
5.	Joint Gasket (1)	PTFE
6.	Stem (1)	AISI 316
7.	Thrust Washer (1)	PTFE
8.	Stem Packing (2)	PTFE
9.	Gland Nut (1)	AISI 304
10.	Handle (1)	AISI 304
11.	Spring Washer (1)	AISI 304
12.	Stem Nut (1)	AISI 304
13.	Handle Sleeve (1)	Vinyl Grip
14.	Lock Device (1)	AISI 430

- Investment cast body and ends
- Blow-out proof stem
- Full port
- FNPT threaded on both ends
- Material: ASTM A351-CF8M
- NACE MR0175
- Locking handle

Size	dia (mm)	L	H	W	S	S1	X	N	P	BL	Torque (in-lbs)	CV Factor	Kg
1/4"	11.6	50	48	91	16.5	10.2	5	12.5	28.5	5/16"	35	7	0.21
3/8"	12.5	50	48	91	16.5	10.2	5	12.5	28.5	5/16"	35	7	0.22
1/2"	15	60	52	91	16.5	10.2	5	12.5	28.5	5/16"	47	15	0.29
3/4"	20	65	61	111	20	13.5	6.5	21	34.8	3/8"	64	45	0.42
1"	25	80	65	111	23.5	16	8	22.5	34.8	7/16"	90	65	0.71
1¼"	32	92	79	154	23.5	16	8	23.5	38.1	7/16"	117	125	1.06
1½"	38	105	83	154	25.5	17	9	23.5	38.1	1/2"	156	175	1.68
2"	50	125	97	192	25.5	17	9	23.5	38.1	1/2"	217	380	2.71

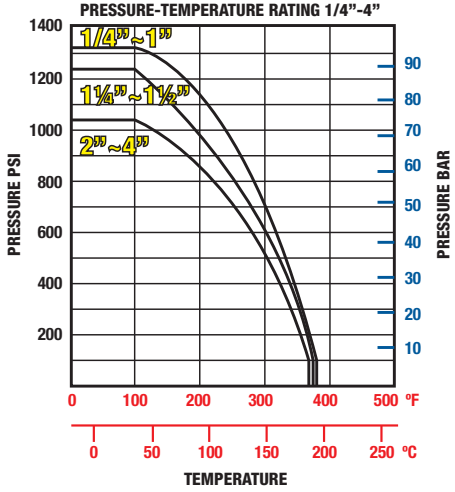

10.25 - F2 – FLYGT LEVEL SWITCH

Technical
specification

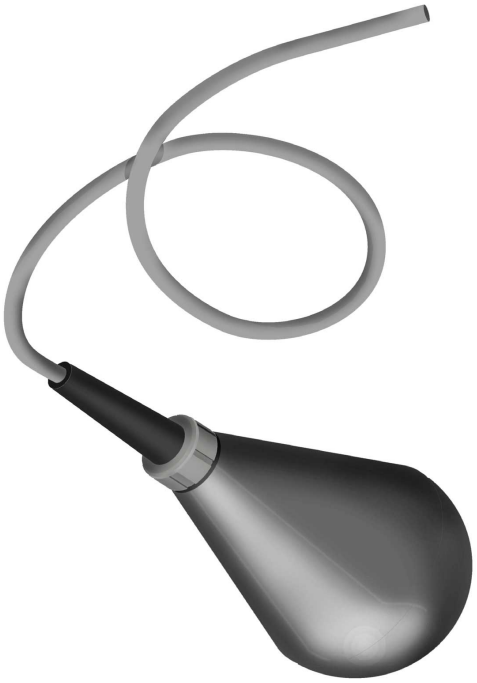

ENM-10 Level regulator

FLYGT
a xylem brand

Table of Contents

PRODUCT DESCRIPTION....2
Product description....2

CHEMICAL RESISTANCE LIST....6
Chemical resistance list....6

PRODUCT RANGE....8
Product range....8

PRODUCT DESCRIPTION

Product description

The simplest possible method for level control! A mechanical switch in a plastic casing, freely suspended at the desired height from its own cable. When the liquid level reaches the regulator, the casing will tilt and the mechanical switch will close or break the circuit, thereby starting or stopping a pump or actuating an alarm device. No wear, no maintenance! In sewage pumping stations, for ground water and drainage pumping – in fact, for most level control applications – the ENM-10 is the ideal solution.

The regulator casing is made of polypropylene and the cable is sheathed with a special PVC or Nitrile/PVC rubber compound. The plastic components are welded and screwed together. Adhesive is never used. Impurities and deposits will not adhere to the smooth casing.

This level regulator is available in different versions, depending upon the medium in which it is to be used. As standard, the regulator can be obtained with 6, 13, 20, 30 or 50 metres (20, 42, 65, 100 or 167 feet) of cable for liquids with specific density between 0.95 and 1.10 g/cm3; for other specific densities and for the Ex-version, the regulator is only available with 20 metres (65 ft) of cable. The regulator can withstand up to 60°C (140°F).

Technical data

Liquid temperature:	min. 0°C (32°F) max. 60°C (140°F)
Liquid density:	min. 0.65 g/cm^3 max. 1.5 g/cm^3
Degree of protection:	IP68, 20 m (65 ft)
Interrupting capacity of micro switch:	AC, resistive load, 250V 10A AC, inductive load, 250V 3A cos ϕ = 0.5 DC, 30V 5A
With gold plated micro switch:	same as above, except: DC, 24V 10mA

Note that local regulations may limit the voltage.

Materials

Body:	Body:
Bending relief:	EPDM rubber
Cable:	special compound PVC or NBR/PVC nitrile/PVC rubber

Dimensions

Table 1

For density g/cm^3	Regulator length mm (in.)	Diameter mm (in.)
0.65–0.80	194 (7 10/16)	100 (4)
0.80–0.95	177 (7)	100 (4)
0.95–1.10	162 (6 3/8)	100 (4)
1.05–1.20	142 (5 9/16)	100 (4)
1.20–1.30	133 (5 1/4)	100 (4)

For density g/cm^3	Regulator length mm (in.)	Diameter mm (in.)
1.30–1.40	130 (5 2/16)	100 (4)
1.40–1.50	126 (5)	100 (4)

Weight: approx. 2 kg (4.5 lb) for a standard density regulator with 20 m cable.

Approvals: CE, CSA, SEMKO, NEMKO, DEMKO

LVD approval according to EN61058

CSA approval: Cert no. 1330172

Cl.I Zone 0, Gr. IIC;

CL.I Div.1 Gr A, B, C&D;

Cl.II Gr. E, F&G;

Cl.III when installed to the certified Intrinsically Safe relay, Ex ia, rated for the locations per submitter controll drawing and installation manual.

Intrincically safe circuits are required for the automatic control system. - Use a EX-safety barrier (e.g. Prod. no. 84 01 07).

0080

Figure 1

Wiring alternative

To conform to local regulations, the level regulators are normally connected through a transformer to a low-tension control circuit.

Two regulators are used; one for starting and one for stopping. A third regulator can be connected if an alarm is required at a given level.

Identical regulators can be used for all functions.

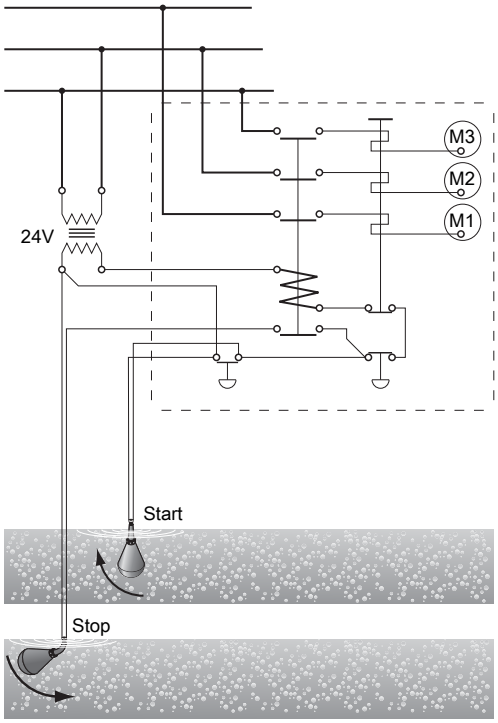

Connect the gray and black leads.

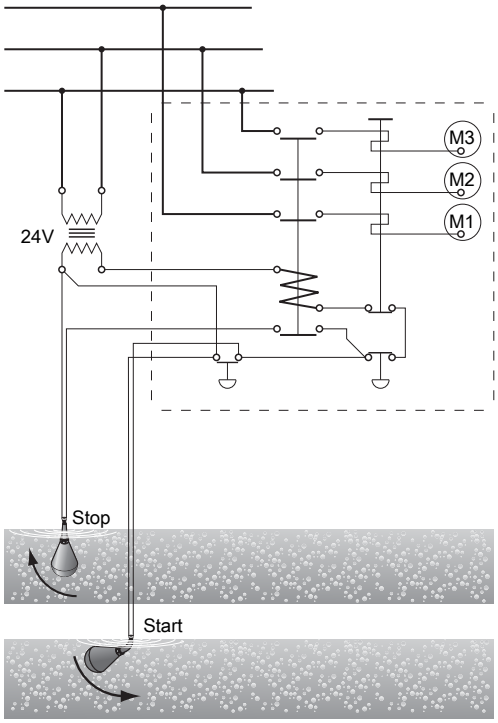

Connect the gray and brown leads.

Insulate the brown lead.
Figure 2: Connected for emptying

Insulate the black lead.
Figure 3: Connected for emptying

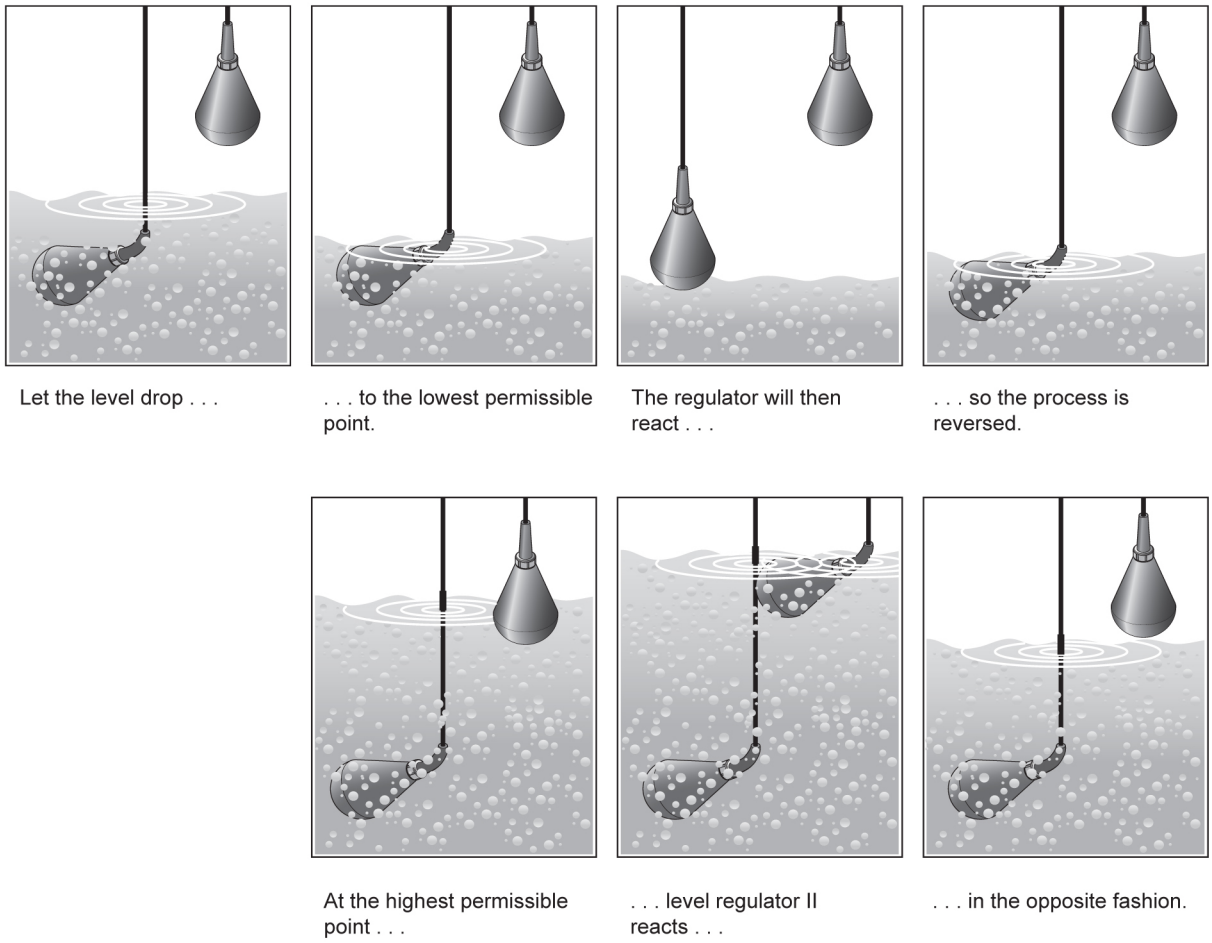

Figure 4

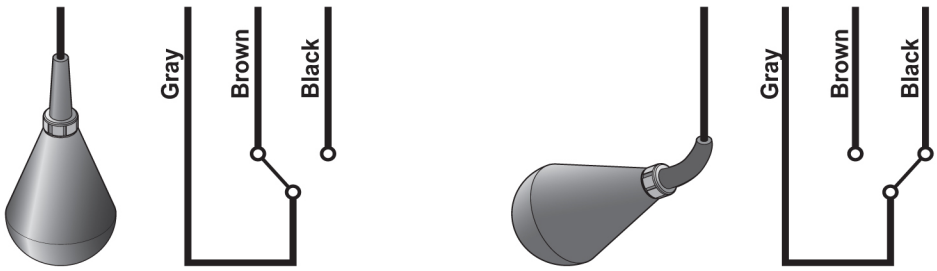

Figure 5: Colour code

Maintenance and repair

ENM-10 is very durable and practically maintenance free. You only have to check on it occasionally, to ensure its continual operation.

- It is recommended to occasionally clean ENM-10, and especially when fat/grease covers the plastic surface.
- At the same time, make an occular inspection of the regulator to make sure neither cable, protective sleeve or plastic casing show any signs of damage.

- A damaged ENM-10 cannot be repaired in any way, due to the hermetic encapsulation. If the unit is found to be damaged, replace it with a new one.
- For Ex-installations, also make absolutely sure that the Ex-barrier (e.g. Prod. no. 84 01 07) is operating correctly - The LED changes when the switch is toggled.

The manufacturers reserve the right to alter performance specification or design without notice.

CHEMICAL RESISTANCE LIST

Chemical resistance list

The liquid in which level regulation is practiced most frequently is, of course, water. Of the millions of regulators in use all over the world today, it is estimated that nine out of ten work in water.

However, with a float body of polypropylene, a cable of PVC or NBR/PVC nitrile/PVC rubber and a bending relief of EPDM rubber, the ENM-10 is virtually insensitive to many aggressive liquids.

The table shows how resistant the ENM-10 equipped with either PVC or NBR/PVC nitrile/PVC rubber cable, is to different chemicals at two different temperatures.

The classification is broken down into the following categories:

0 = No effect, 1 = Minor to moderate and 2 = Severe effect. The sign – means that information is not available.

Keep in mind also that the density of the liquid determines the bouyancy of the regulator. The ENM-10 is made for seven different densities. See *Product description* (page 2).

Always observe local regulations:

Take particular note of:

- risk of fire/explosion
- hygiene requirements

Acids	PVC cable		NBR/PVC nitrile/PVC rubber cable	
	20°C (68°F)	60°C (140°F)	20°C (68°F)	60°C (140°F)
Acetic Acid 50%	1	2	0	0
Acetic Acid 75%	2	2	0	0
Benzoic Acid	2	2	0	0
Boric Acid 5%	0	—	0	0
Butyric Acid	2	2	2	2
Chromic Acid 10%	0	2	2	2
Citric Acid	0	1	0	0
Hydrobromic Acid 5%	1	2	0	0
Hydrochloric Acid 10%	0	1	0	1
Hydrochloric Acid 37%	1	2	0	2
Hydrocyanic Acid 10%	0	0	1	2
Hydrofluoric Acid 5%	0	2	0	1
Hypochloric Acid	1	2	2	2
Maleic Acid	2	2	2	2
Nitric Acid 5%	1	1	1	1
Nitric Acid 65%	2	2	2	2
Oleic Acid	1	2	2	2
Oxalic Acid 50%	1	1	1	2
Phosphoric Acid 25%	0	0	1	2
Phosphoric Acid 85%	0	0	1	2
Sulphuric Acid 10%	1	2	1	2
Sulphuric Acid 78%	2	2	2	2
Tannic Acid	0	0	0	0
Tartaric Acid	1	1	1	1
Bases				
Ammonium Hydroxide	0	—	0	0
Calcium Hydroxide	0	0	0	0
Potassium Hydroxide	1	2	0	0
Sodium Hydroxide	1	2	0	0

Salts	PVC cable		NBR/PVC nitrile/PVC rubber cable	
	20°C (68°F)	60°C (140°F)	20°C (68°F)	60°C (140°F)
Aluminium Chloride	0	0	0	0
Calcium Sulphate	0	0	0	0
Calcium Chloride	0	0	0	0
Calcium Nitrate	0	0	0	0
Copper Chloride	0	0	0	0
Copper Sulphate	0	0	0	0
Ferric Chloride	0	0	0	0
Ferrous Sulphate	0	0	0	0
Magnesium Chloride	0	0	0	0
Potassium Sulphate	0	0	0	0
Potassium Nitrate	0	0	0	0
Potassium Carbonate	1	1	1	1
Potassium Bicarbonate	0	0	0	0
Sodium Sulphate	0	0	0	0
Sodium Chloride	0	0	0	0
Sodium Nitrate	0	0	0	0
Sodium Bicarbonate	0	0	0	0
Sodium Carbonate	0	0	0	0
Tin Chloride	1	1	1	1
Zinc Sulphate	0	0	0	0
Zinc Chloride	0	0	0	0
Oils				
Castor Oil	1	1	1	1
Cocoanut Oil	0	—	0	2
Corn Oil	2	2	2	2
Diesel Oil	2	2	2	2
Linseed Oil	2	2	2	2
Mineral Oils	2	2	2	2
Olive Oil	1	1	1	1
Silicone Oils	0	0	0	0

Solvents and miscellaneous	PVC cable		NBR/PVC nitrile/PVC rubber cable	
	20°C (68°F)	60°C (140°F)	20°C (68°F)	60°C (140°F)
Aceton	2	2	2	2
Aniline	2	2	1	2
Benzene	2	2	2	2
Butyl Alcohol	2	2	0	1
Carbon Tetrachloride	2	2	2	2
Chlorobenzene	2	2	2	2
Chloroform	2	2	2	2
Ethyl Alcohol	2	2	0	1
Ethyl Ether	2	2	2	2
Ethyl Acetate	2	2	2	2
Ethylene Dichloride	2	2	2	2
Ethylene Chloride	2	2	2	2
Formaldehyde 37%	1	2	0	0
Gasoline	2	2	2	2
Kerosene	2	2	2	2
Methyl Alcohol	2	2	0	0
Methyl Ethyl Ketone	2	2	2	2
Methylene Chloride	2	2	2	2
Nitrobenzene	2	2	2	2
Phenol	2	2	2	2
Toluene	2	2	2	2
Trichlorethylene	2	2	2	2
Turpentine	2	2	2	2
Xylene	2	2	2	2
Gases				
Carbon Dioxide	0	0	0	0
Carbon Monoxide	0	0	0	0
Chlorine (wet)	2	2	2	2
Hydrogen Sulphide	0	0	1	1
Sulphur Dioxide (wet)	1	1	2	2

0 = No effect, 1 = Minor to moderate, 2 = Severe effect. – = No information available.

Figure 6

PRODUCT RANGE

Product range

Part no.	For density [g/cm³]	Color of level switch	Type of cable	Cable length [m]	Approvals	For market	Notes
5828800	0,65-0,80	Blue	1	20	CE		
5828801	0,80-0,95	Blue	1	20	CE		
5828802	0,95-1,10	Blue	1	6	CE		
5828803	0,95-1,10	Blue	1	13	CE		
5828804	0,95-1,10	Blue	1	20	CE		
5828805	1,05-1,20	Blue	1	20	CE		
5828806	1,2-1,3	Blue	1	20	CE		
5828807	1,3-1,4	Blue	1	20	CE		
5828808	1,4-1,5	Blue	1	20	CE		
5828809	0,65-0,80	Grey	5	20	CSA/CE	Canada	
5828810	0,80-0,95	Grey	5	20	CSA/CE	Canada	
5828811	0,95-1,10	Grey	5	6	CSA/CE	Canada	
5828812	0,95-1,10	Grey	5	13	CSA/CE	Canada	
5828813	0,95-1,10	Grey	5	20	CSA/CE	Canada	
5828814	1,05-1,20	Grey	5	20	CSA/CE	Canada	
5828815	1,2-1,3	Grey	5	20	CSA/CE	Canada	
5828816	1,3-1,4	Grey	5	20	CSA/CE	Canada	
5828817	1,4-1,5	Grey	5	20	CSA/CE	Canada	
5828818	0,65-0,80	Grey	1	20	CSA/CE	Canada	
5828819	0,80-0,95	Grey	1	20	CSA/CE	Canada	
5828820	0,95-1,10	Grey	1	6	CSA/CE	Canada	
5828821	0,95-1,10	Grey	1	13	CSA/CE	Canada	
5828822	0,95-1,10	Grey	1	20	CSA/CE	Canada	
5828823	1,05-1,20	Grey	1	20	CSA/CE	Canada	
5828824	1,2-1,3	Grey	1	20	CSA/CE	Canada	
5828825	1,3-1,4	Grey	1	20	CSA/CE	Canada	
5828826	1,4-1,5	Grey	1	20	CSA/CE	Canada	
5828827	0,65-0,80	Blue	2	20	CE	USA	
5828828	0,80-0,95	Blue	2	20	CE	USA	
5828829	0,95-1,10	Blue	2	6	CE	USA	
5828830	0,95-1,10	Blue	2	13	CE	USA	
5828831	0,95-1,10	Blue	2	20	CE	USA	
5828832	1,05-1,20	Blue	2	20	CE	USA	
5828833	1,2-1,3	Blue	2	20	CE	USA	
5828834	1,3-1,4	Blue	2	20	CE	USA	
5828835	1,4-1,5	Blue	2	20	CE	USA	
5828836	0,95-1,10	Grey	5	30	CSA/CE	Canada	
5828837	0,95-1,10	Grey	5	50	CSA/CE	Canada	
5828838	0,95-1,10	Grey	5	100	CSA/CE	Canada	
5828839	0,95-1,10	Grey	5	150	CSA/CE	Canada	
5828851	0,95-1,10	Red	3	65	CE		
5828852	0,95-1,10	Red	3	6	CE		
5828853	0,95-1,10	Red	3	13	CE		
5828854	0,95-1,10	Red	3	20	CE		
5828855	0,95-1,10	Red	3	6	CSA/CE	Canada	
5828856	0,95-1,10	Red	3	13	CSA/CE	Canada	
5828857	0,95-1,10	Red	3	20	CSA/CE	Canada	

Cont. →

Figure 7

5828858	0,95-1,10	Red	4	6	CE	USA	
5828859	0,95-1,10	Red	4	13	CE	USA	
5828860	0,95-1,10	Red	4	20	CE	USA	
5828870	0,65-0,80	Blue	5	20	CE		
5828871	0,80-0,95	Blue	5	20	CE		
5828872	0,95-1,10	Blue	5	6	CE		
5828873	0,95-1,10	Blue	5	13	CE		
5828874	0,95-1,10	Blue	5	20	CE		
5828875	1,05-1,20	Blue	5	20	CE		
5828876	1,2-1,3	Blue	5	20	CE		
5828877	1,3-1,4	Blue	5	20	CE		
5828878	1,4-1,5	Blue	5	20	CE		
5828879	0,95-1,10	Blue	1	65	CE		
5828880	0,95-1,10	Blue	1	30	CE		
5828881	0,95-1,10	Blue	1	50	CE		
5828882	0,95-1,10	Grey	1	30	CSA/CE	Canada	
5828883	0,95-1,10	Grey	1	50	CSA/CE	Canada	
5828884	0,95-1,10	Blue	2	30	CE	USA	
5828885	0,95-1,10	Blue	2	50	CE	USA	
5828886	0,95-1,10	Red	3	30	CE		
5828887	0,95-1,10	Red	3	50	CE		
5828890	0,95-1,10	Blue	5	30	CE		
5828891	0,95-1,10	Blue	5	50	CE		
5828892	0,95-1,10	Red	3	6	CE	Japan	
5828893	0,95-1,10	Red	3	13	CE	Japan	
5828894	0,95-1,10	Red	3	20	CE	Japan	
5828895	0,95-1,10	Blue	1	6	CE	Japan	
5828896	0,95-1,10	Blue	1	13	CE	Japan	
5828897	0,95-1,10	Blue	1	20	CE	Japan	
5828898	0,95-1,10	Blue	1	50	CE	Japan	
5947919	0,95-1,10	Blue	5	20	CE		Designed for low current and slow movements
5947920	0,95-1,10	Grey	5	20	CSA/CE		Designed for low current and slow movements

Type of cable:

1. Blue PVC jacket with color coding of wires: Grey/Brown/Black
2. Blue PVC jacket with color coding of wires: Red/White/Black
3. Red PVC jacket with color coding of wires: Grey/Brown/Black
4. Red PVC jacket with color coding of wires: Red/White/Black
5. BLACK NBR/PVC jacket with color coding of wires: Grey/Brown/Black (NBR=Nitrile rubber)

Xylem |ˈzīləm|

1) The tissue in plants that brings water upward from the roots
2) A leading global water technology company

We're 12,000 people unified in a common purpose: creating innovative solutions to meet our world's water needs. Developing new technologies that will improve the way water is used, conserved, and re-used in the future is central to our work. We move, treat, analyze, and return water to the environment, and we help people use water efficiently, in their homes, buildings, factories and farms. In more than 150 countries, we have strong, long-standing relationships with customers who know us for our powerful combination of leading product brands and applications expertise, backed by a legacy of innovation.

For more information on how Xylem can help you, go to xyleminc.com

xylem
Let's Solve Water

Xylem Water Solutions AB
Gesällvägen 33
174 87 Sundbyberg
Sweden
Tel. +46-8-475 60 00
Fax +46-8-475 69 00
http://tpi.xyleminc.com

Visit our Web site for the latest version of this document and more information

The original instruction is in English. All non-English instructions are translations of the original instruction.

© 2011 Xylem Inc

891480_11.1_en.GB_2012-01_TS_ENM-10

10.26 - F3 – FPZ REGENERATIVE BLOWER

FPZ S.p.A.
Via F.lli Cervi 16
20863 Concorezzo (MB), ITALIA
Tel. +39 039 69 06 811
info@fpz.com www.fpz.com

COMPRESSORI-ASPIRATORI A CANALE LATERALE	**ISTRUZIONI**	**I**
LATERAL CHANNEL BLOWERS-EXHAUSTERS	**INSTRUCTIONS**	**GB**
COMPRESSEURS – ASPIRATEURS A CANAL LATERAL	**INSTRUCTIONS**	**F**
COMPRESORES – ASPIRADORES DE CANAL LATERAL	**INSTRUCCIONES**	**E**
SEITENKANALVERDICHTER-VAKUUMPUMPEN BAUREIHE	**BETRIEBSANLEITUNG**	**D**
COMPRESSORES - EXAUSTORES DE CANAL LATERAL	**INSTRUÇÕES**	**PB**

LEGGERE ATTENTAMENTE TUTTE LE ISTRUZIONI E CONSERVARLE	*I*
PLEASE READ CAREFULLY ALL INSTRUCTIONS AND KEEP THEM FOR FUTURE REFERENCE	*GB*
LIRE ATTENTIVEMENT TOUTES LES INSTRUCTIONS ET LES CONSERVER	*F*
SIRVASE LEER CUIDADOSAMENTE TODAS LAS INSTRUCCIONES Y CONSERVARLAS PARA FUTURA REFERENCIA	*E*
ALLE ANLEITUNGEN SIND SORGFÄLTIG ZU LESEN UND AUFZUBEWAHREN!	*D*
LEIS DILIGENTEMENTE TODAS ESTAS INSTRUÇÕES E CONSERVE-AS	*PB*

SCL K03 / K04 / K05 / K06 / K07 / K75 / K08 / K09 / K10 / K11 / K12 MS-MOR

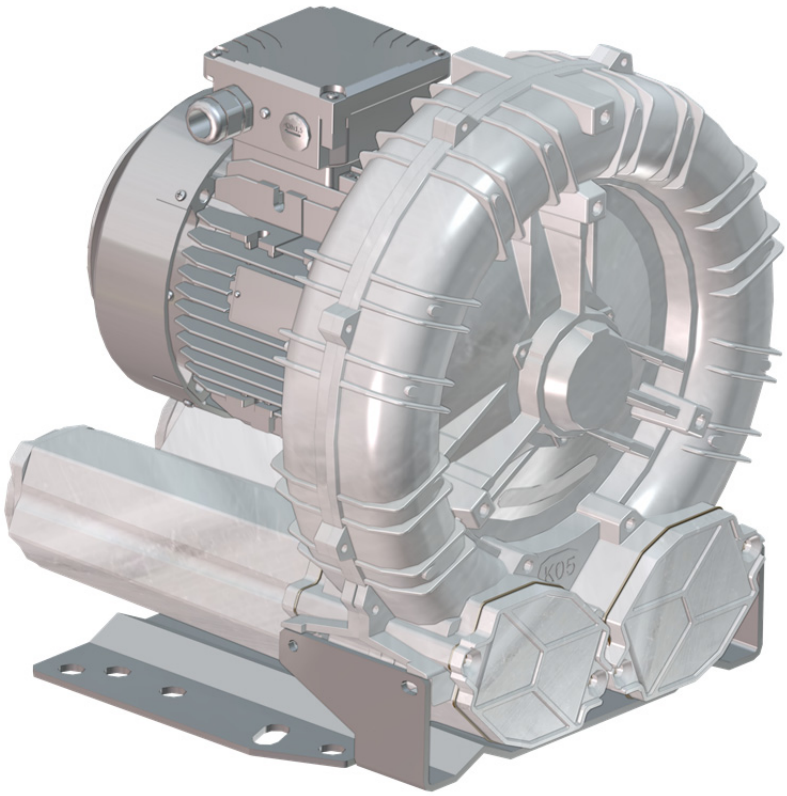

COMPANY WITH QUALITY MANAGEMENT SYSTEM CERTIFIED BY DNV
= ISO 9001:2008 =

FPZ S.p.A.
Via F.lli Cervi 16
20863 Concorezzo (MB), ITALIA
Tel. +39 039 69 06 811
info@fpz.com www.fpz.com

FPZ BLOWER TECHNOLOGY

DICHIARAZIONE DI CONFORMITÁ
DECLARATION OF CONFORMITY

Il Fabbricante — FPZ S.p.A.
The manufacturer — Via F.lli Cervi, 16

Dichiaria che la macchina — SOFFIANTE A CANALE LATERALE
Declares that the machineries — *Lateral channel blowers-exhausters*

Modello *Models*	**Serie** *series*	**Esecuzione** *Execution*	**Versione** *Version*
K03, K04, K05, K06, K07, K75, K08, K09, K10, K11, K12	MS	MOR	EU, USA, TMS, BPA
K07R, K08R, K09, K10, K11, K12	MD		

al quale questa dichiarazione si riferisce è conforme alla seguente Direttiva:
to which this declaration relates complies with the following Directives:

- Direttiva Macchine 2006/42/CE — *- Machinary directive 2006/42/EC*

E' conforme alle disposizioni pertinenti delle seguenti altre direttive:
It fulfils also the relevant provisions of the following Directives:

- Direttiva Compatibilità Elettromagnetica 2004/108/CE — - Direttiva Bassa Tensione 2006/95/CE
- *Electromagnetic compatibility (EMC) directive EC 2004/108* — *- Low voltage directive 2006/95/EC*

Inoltre dichiara che sono state applicate le seguenti norme armonizzate:
Also declares that the following Harmonised standards have been applied:

- UNI EN ISO 12100 — - ISO/TR 14121 – 2

Nome ed indirizzo della persona autorizzata a costituire il Fascicolo Tecnico:
Name and address of the person authorised to compile the Technical File:

- Andrea Lazari Via F.lli Cervi 16 – 20863 Concorezzo (MB)

Concorezzo (MB), *data 01.08.2013*

Amministratore Delegato
Managing Director
Sergio Ferigo

Direttore Tecnico
Technical Manager
Andrea Lazari

COMPRESSIONE	**DATI CARATTERISTICI**	**I**
COMPRESSION	**PERFORMANCE TABLE**	**GB**
COMPRESSION	**CARACTÉRISTIQUES TECHNIQUES**	**F**
COMPRESIÓN	**DATOS CARACTERÍSTICOS**	**E**
KOMPRESSION	**LEISTUNGDATEN**	**D**
COMPRESSÃO	**DADOS CARACTERÍSTICOS**	**PB**

Mod	N 2900 rpm [kW]	N 3500 rpm [kW]	Q max 2900 rpm [m³/h]	Q max 3500 rpm [m³/h]	ΔP max 2900 rpm [hPa] (mbar)	ΔP max 3500 rpm [hPa] (mbar)	Leq[1] 2900 rpm (Lp) [dB(A)]	Leq[1] 3500 rpm (Lp) [dB(A)]	Peso[2] Weight[2] Poids[2] Gewicht [kg]	Ps max A [bar]
K03-MS	**0,37**	0,43	74	89	130	120	59,7	61,7	11	1,8
	0,55	0,63	74	89	180	200	60	62	12	1,8
K04-MS	**0,75**	0,9	137	166	140	120	62,6	64,6	15,8	1,8
	1,1	1,3	137	166	200	175	62,8	64,8	16,5	1,8
	1,5	1,75	137	166	250	250	63	65	19,5	1,8
K05-MS	**1,1**	1,3	219	265	130	100	68,2	70,2	22,5	2
	1,5	1,75	219	265	175	160	68,5	70,5	23,5	2
	2,2	2,55	219	265	270	260	68,8	70,8	26,5	2
	3	3,45	219	265	300	350	69,1	71,1	30,5	2
K06-MS	**2,2**	2,55	304	366	180	150	71	73	31,2	2
	3	3,45	304	366	250	220	71,3	73,3	32,5	2
	4	4,6	304	366	340	325	71,6	73,6	41	2
K07-MS	**2,2**	2,55	414	499	130	100	76,4	78,4	46,5	2,8
	3	3,45	414	499	200	175	76,7	78,7	47,5	2,8
	4	4,6	414	499	280	250	77	79	51	2,8
	5,5	6,3	414	499	400	375	77,3	79,3	61,5	2,8
K75-MS	**4**	4,6	477	576	150	100	77,4	79,4	51,5	2,8
	5,5	6,3	477	576	250	200	77,7	79,7	62	2,8
	7,5	8,7	477	576	325	300	78	80	67	2,8
K08-MS	**3**	3,45	536	647	125	100	77,4	79,4	49	2,8
	4	4,6	536	647	180	150	77,7	79,7	52,5	2,8
	5,5	6,3	536	647	275	250	78	80	63	2,8
	7,5	8,7	536	647	400	375	78,3	80,3	68	2,8
	9,2	10,6	536	647	450	450	78,6	80,6	77,5	2,8
K09-MS	**4**	4,6	663	800	130	85	78	80	62	2,8
	5,5	6,3	663	800	210	150	78,2	80,2	72,5	2,8
	7,5	8,7	663	800	290	250	78,5	80,5	77,5	2,8
	9,2	10,6	663	800	350	325	78,7	80,7	87	2,8
	11	12,7	663	800	450	400	79	81	87,5	2,8
K10-MS	**5,5**	6,3	782	944	160	115	78,1	80,1	75	2,8
	7,5	8,7	782	944	250	200	78,5	80,5	80	2,8
	9,2	10,6	782	944	300	270	79	81	89,5	2,8
	11	12,7	782	944	400	375	79,4	81,4	90	2,8
	15	17,4	782	944	500	500	79,6	81,6	95	2,8
K11-MS	**7,5**	8,7	915	1105	175	130	80	82	83,5	2,8
	9,2	10,6	915	1105	230	175	80,1	82,1	93	2,8
	11	12,7	915	1105	300	250	80,4	82,4	93,5	2,8
	15	17,4	915	1105	400	350	80,7	82,7	98,5	2,8
	18,5	21,5	915	1105	500	500	83,6	85,6	128,5	2,8
K12-MS	**9,2**	10,6	1022	1234	150	100	80,6	82,6	96,5	2,8
	11	12,7	1022	1234	200	150	80,9	82,9	97	2,8
	15	17,4	1022	1234	300	275	81,2	83,2	102	2,8
	18,5	21,5	1022	1234	425	375	84,1	86,1	132	2,8

[1] Rumorosità misurata alla distanza di 1 m con aspirazione e mandata canalizzate, secondo la Normativa ISO 3744
Noise measured at 1 m distance with inlet and outlet ports piped, in accordance to ISO 3744
Niveau de bruit mesuré a 1 m de distance, conduits d'aspiration et refoulement raccordés selon la norme ISO 3744
Rumorosidad medida a 1 m de distancia de los puertos de admisión y descarga, según la Normativa ISO 3744.
Schalldruckpegel, mit angeschlossener Schlauchleitung am Ein- und Auslass, im Abstand von 1 m gemäß ISO 3744 gemessen
Nível de rumor medido à distancia de 1 m. com aspiração e fluxo canalizados de acordo com a Normativa ISO 3744.

[2] Il valore indicato è riferito alla macchina con motore trifase per esecuzione MOR, senza il motore elettrico per esecuzioni GOR e GVR.
Value refers to the weight of the machine with 3 Phase motor if MOR range, without motor if GOR or GVR range.
Le valeur se refère à la turbine 3-phasé en execution MOR et GOR/GVR pour la turbine sans moteur.
El valor indicado se refiere al equipo con motor trifásico para la ejecución MOR. Sin el motor eléctrico para las ejecuciones GOR y GVR.
Die Angaben zum Gewicht beziehen sich bei der Baureihe MOR auf die Ausführung mit 3-phasigen Motoren und bei den Baureihen GOR und GVR auf die Verdichteraggregate ohne Motoren.
O valor refere-se à máquina com motor trifásico para a execução de MOR, sem o motor elétrico para execuções GOR e GVR.

N: Potenza installata
N: Installed motor power
N: Puissance installé
N: Potencia instalada
N: Installierte motorleistung
N: Capacidade instalada

Q: Portata
Q: Flow rate
Q: Débit
Q: Caudal
Q: Volumenstrom
Q: fluxo

ΔP: Pressione differenziale
ΔP: Differential pressure
ΔP: Pression différentielle
ΔP: Presión diferencial
ΔP: Druckdifferenz
ΔP: pressão difFerencia

Leq: Rumorosità
Leq: Noise
Leq: Niveau sonore
Leq: Rumorosidad
Leq: Schalldruckpegel
Leq: Rumor

ASPIRAZIONE	**DATI CARATTERISTICI**	**I**
ASPIRATION	**PERFORMANCE TABLE**	**GB**
ASPIRATION	**CARACTÉRISTIQUES TECHNIQUES**	**F**
ASPIRACIÓN	**DATOS CARACTERÍSTICOS**	**E**
VAKUUMBETRIEB	**LEISTUNGDATEN**	**D**
ASPIRAÇÃO	**DADOS CARACTERÍSTICOS**	**PB**

Mod	N 2900 rpm [kW]	N 3500 rpm [kW]	Q max 2900 rpm [m³/h]	Q max 3500 rpm [m³/h]	ΔP max 2900 rpm [hPa] (mbar)	ΔP max 3500 rpm [hPa] (mbar)	Leq¹ 2900 rpm (Lp) [dB(A)]	Leq¹ 3500 rpm (Lp) [dB(A)]	Peso² Weight² Poids² Gewicht² [kg]	Ps max A [bar]
K03-MS	**0,37**	0,43	74	89	120	120	58,7	60,7	11	1,8
	0,55	0,63	74	89	160	200	59	61	12	1,8
K04-MS	**0,75**	0,9	137	166	140	120	61,6	63,6	15,8	1,8
	1,1	1,3	137	166	200	175	61,8	63,8	16,5	1,8
	1,5	1,75	137	166	225	250	62	64	19,5	1,8
K05-MS	**1,1**	1,3	219	265	130	100	67,2	69,2	22,5	2
	1,5	1,75	219	265	175	160	67,5	69,5	23,5	2
	2,2	2,55	219	265	240	260	67,8	69,8	26,5	2
	3	3,45	219	265	-	275	-	70,1	30,5	2
K06-MS	**2,2**	2,55	304	366	180	150	70	72	31,2	2
	3	3,45	304	366	250	220	70,3	72,3	32,5	2
	4	4,6	304	366	270	325	70,6	72,6	41	2
K07-MS	**2,2**	2,55	414	499	130	100	75,4	77,4	46,5	2,8
	3	3,45	414	499	200	175	75,7	77,7	47,5	2,8
	4	4,6	414	499	280	250	76	78	51	2,8
	5,5	6,3	414	499	325	375	76,3	78,3	61,5	2,8
K75-MS	**4**	4,6	477	576	150	100	76,4	78,4	51,5	2,8
	5,5	6,3	477	576	250	200	76,7	78,7	62	2,8
	7,5	8,7	477	576	-	300	-	79	67	2,8
K08-MS	**3**	3,45	536	647	125	100	76,5	78,5	49	2,8
	4	4,6	536	647	180	150	76,8	78,8	52,5	2,8
	5,5	6,3	536	647	275	250	77,1	79,1	63	2,8
	7,5	8,7	536	647	350	375	77,4	79,4	68	2,8
	9,2	10,6	536	647	-	-	-	-	77,5	2,8
K09-MS	**4**	4,6	663	800	130	85	77,1	79,1	62	2,8
	5,5	6,3	663	800	210	150	77,3	79,3	72,5	2,8
	7,5	8,7	663	800	290	250	77,6	79,6	77,5	2,8
	9,2	10,6	663	800	350	325	77,8	79,8	87	2,8
	11	12,7	663	800	-	375	-	80,1	87,5	2,8
K10-MS	**5,5**	6,3	782	944	160	115	77,4	79,4	75	2,8
	7,5	8,7	782	944	250	200	77,7	79,7	80	2,8
	9,2	10,6	782	944	300	270	78,2	80,2	89,5	2,8
	11	12,7	782	944	350	375	78,5	80,5	90	2,8
	15	17,4	782	944	-	-	-	-	95	2,8
K11-MS	**7,5**	8,7	915	1105	175	130	80	82	83,5	2,8
	9,2	10,6	915	1105	230	175	80,5	82,5	93	2,8
	11	12,7	915	1105	300	250	81	83	93,5	2,8
	15	17,4	915	1105	350	350	81,8	83,8	98,5	2,8
	18,5	21,5	915	1105	-	-	-	-	128,5	2,8
K12-MS	**9,2**	10,6	1022	1234	150	100	81	83	96,5	2,8
	11	12,7	1022	1234	200	150	81,5	83,5	97	2,8
	15	17,4	1022	1234	300	275	82,3	84,3	102	2,8
	18,5	21,5	1022	1234	325	350	85,2	87,2	132	2,8

INGOMBRI
DIMENSIONS
DIMENSIONS
DIMENSIONES
ABMESSUNGEN
DIMENSÕES EXTERIORES

(K03-MS/K04-MS/K05-MS/K06-MS)

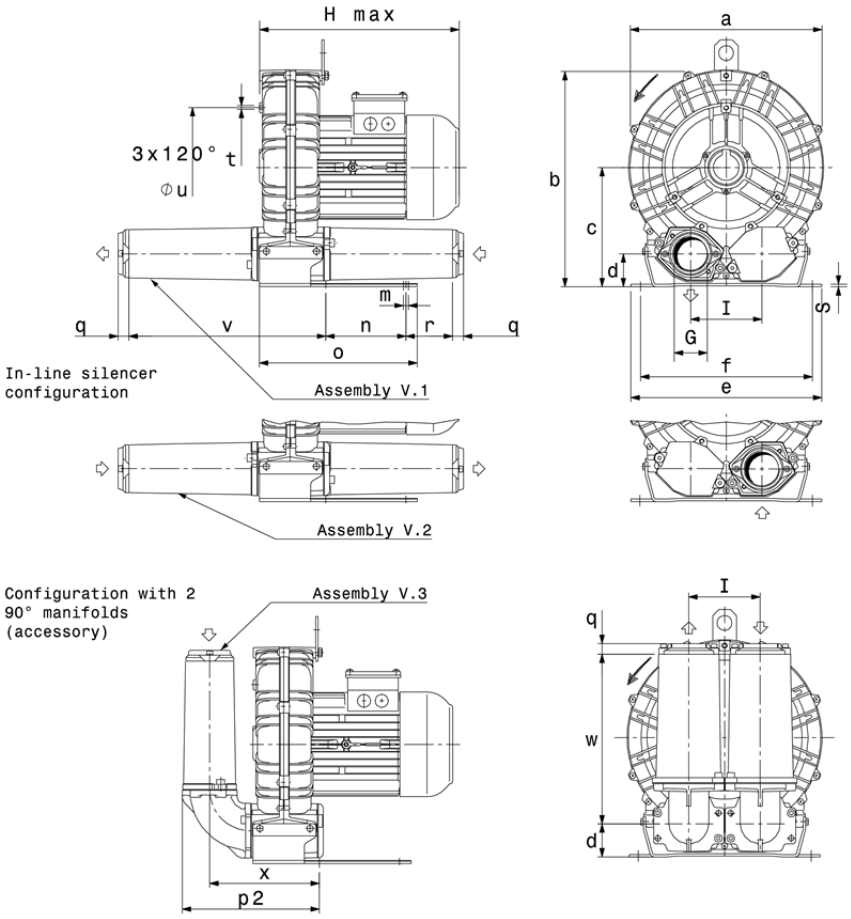

Misure in mm, Dimensions in mm, Dimensions en mm, Medidas in mm, Abmessungen in mm, Dimensões em mm

Mod	a	b	c	d	e	f	G	H
K03-MS	241	268	147	43	230	205	G 1" ¼	241
K04-MS	285	315	172	49	255	225	G 1" ½	310
K05-MS	327	365	200	54	320	260	G 2"	375
K06-MS	376	393	205	54	325	290	G 2"	400

Mod	i	m	n	o	p1	p2	q
K03-MS	86	10	83	142	205	140	18
K04-MS	102	12	95	171	222	160	18
K05-MS	120	15	115	265	320	230	18
K06-MS	125	15	140	272	334	244	18

Mod	r	s	t	u	v	w	x	z
K03-MS	75	4	M6	140	180	188	106	12
K04-MS	70	4	M6	175	195	188	120	18
K05-MS	98	4	M8	200	330	285	184	19
K06-MS	85	4	M8	240	332	285	198	19

INGOMBRI
DIMENSIONS
DIMENSIONS
DIMENSIONES
ABMESSUNGEN
DIMENSÕES EXTERIORES

(K07-MS/K75-MS/K08-MS/K09-MS/K10-MS/K11-MS/K12-MS)

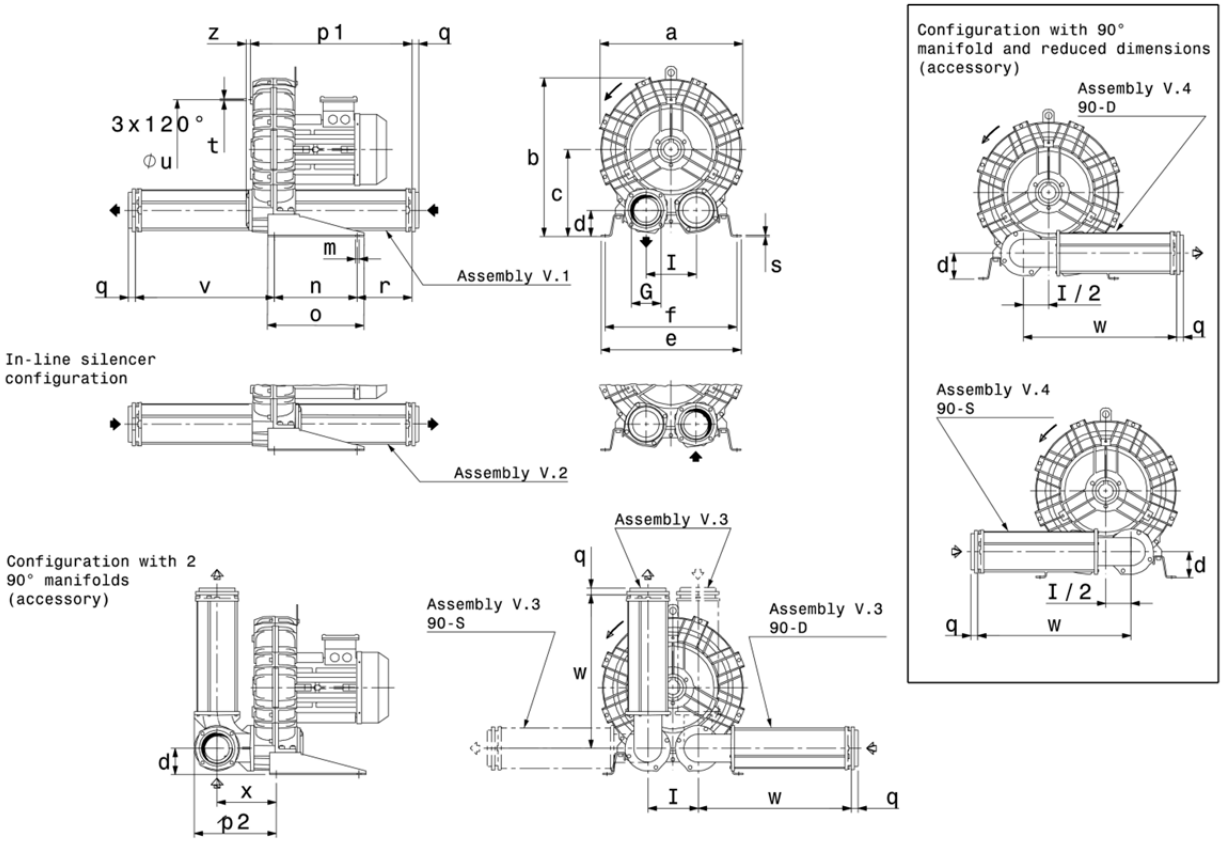

Misure in mm, Dimensions in mm, Dimensions en mm, Medidas in mm, Abmessungen in mm, Dimensões em mm

Mod	a	b	c	d	e	f	G	H
K07-MS	424	481	269	82	468	438	G 3”	445
K75-MS	424	481	269	82	468	438	G 3”	445
K08-MS	457	498	269	82	478	448	G 3”	480
K09-MS	492	561	315	96	508	478	G 4”	490
K10-MS	516	573	315	96	508	478	G 4”	490
K11-MS	542	603	332	91	540	508	G 4”	590
K12-MS	548	605	332	91	540	508	G 4”	593

Mod	i	m	n	o	p1	p2	q
K07-MS	155	13	300	350	512	255	25
K75-MS	155	13	300	350	512	255	25
K08-MS	155	13	300	350	512	255	25
K09-MS	182	13	300	350	586	300	25
K10-MS	182	13	300	350	586	300	25
K11-MS	200	13	300	350	599	305	25
K12-MS	200	13	300	350	599	305	25

Mod	r	s	t	u	v	w	x	z
K07-MS	137	5	M8	295	443	481	183	16
K75-MS	137	5	M8	295	443	481	183	16
K08-MS	137	5	M8	310	443	481	183	16
K09-MS	199	5	M8	360	505	556	215	16
K10-MS	199	5	M8	360	505	556	215	16
K11-MS	204	5	M8	390	510	556	220	16
K12-MS	204	5	M8	390	510	556	220	13

RIPOSIZIONAMENTO SILENZIATORE **(K03-MS/K04-MS/K05-MS/K06-MS)**
REPOSITIONING OF SILENCERS
REPOSITIONNEMENT DES SILENCIEUX
COLOCACIÓN DE LOS SILENCIADORES
EINBAU DER SCHALLDÄMPFER IN ANDERER POSITION
REPOSICIONAMENTO DOS SILENCIADORES

	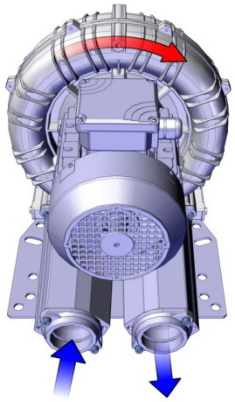 Ver. 0	
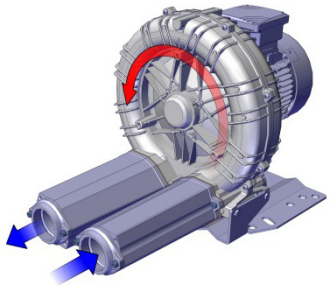 Ver. 0-A	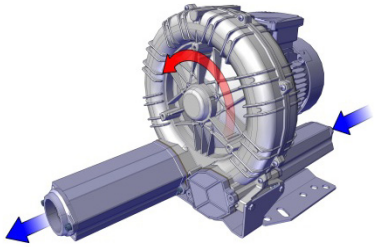 Ver. 1	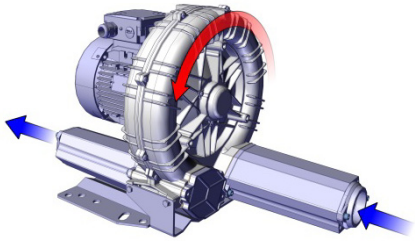 Ver. 2
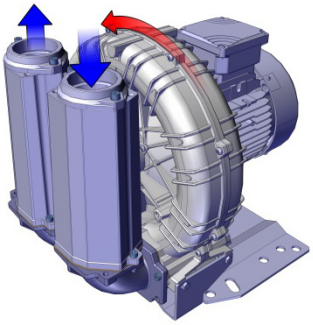 Ver. 3 - 90°DS	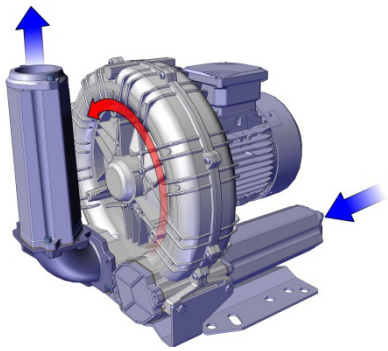 Ver. 4 - 90°D	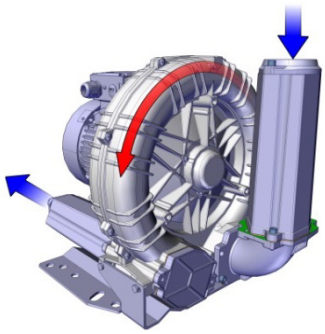 Ver. 4 - 90° S

RIPOSIZIONAMENTO SILENZIATORE (K07-MS/K75-MS/K08-MS/K09-MS/K10-MS/K11-MS/K12-MS)
REPOSITIONING OF SILENCERS
REPOSITIONNEMENT DES SILENCIEUX
COLOCACIÓN DE LOS SILENCIADORES
EINBAU DER SCHALLDÄMPFER IN ANDERER POSITION
REPOSICIONAMENTO DOS SILENCIADORES

	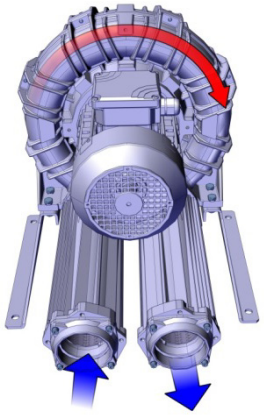 Ver.0	
Ver. 0-A	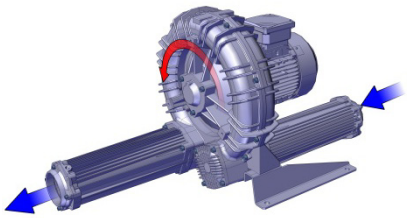 Ver. 1	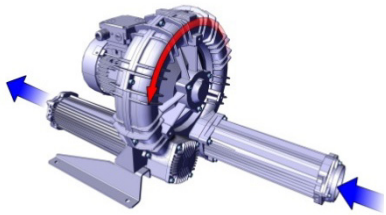 Ver. 2
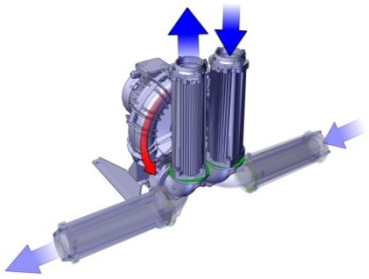 Ver. 3 - 90°DS	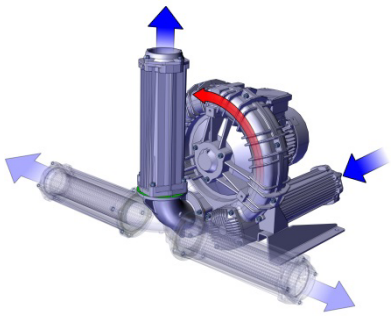 Ver. 4 - 90°D	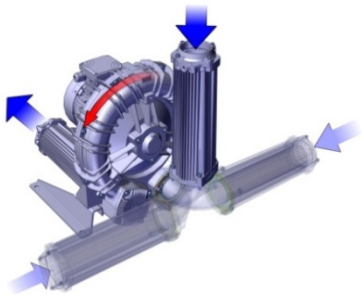 Ver. 4 - 90° S

COMPRESSORE
PRESSURE SERVICE
SOUFFLANTE
COMPRESOR
VERDICHTER
COMPRESSOR

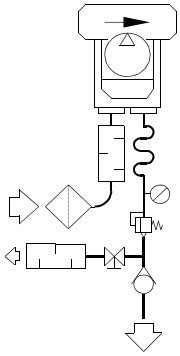

COMPRESSORE IN SERIE
SERIES PRESSURE SERVICE
SOUFFLANTE EN SÉRIE
COMPRESOR EN SERIE
SERIELL ARBEITENDER VERDICHTER
COMPRESSOR EM SÉRIE

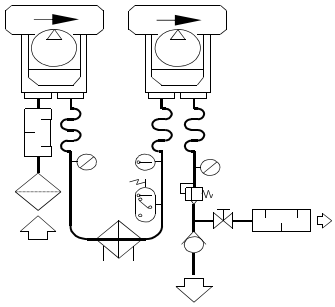

COMPRESSORE IN PARALLELO
PARALLEL PRESSURE SERVICE
SOUFFLANTE EN PARALLÉLE
COMPRESOR EN PARALELO
PARALLEL ARBEITENDER VERDICHTER
COMPRESSOR EM PARALELO

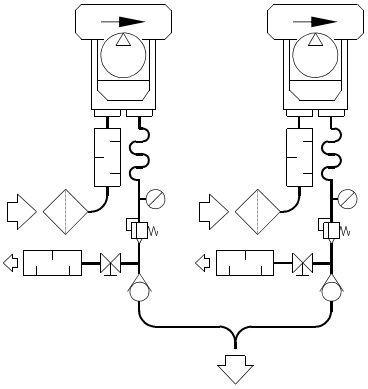

ASPIRATORE
VACUUM SERVICE
POMPE À VIDE
ASPIRADOR
VAKUUMPUMPE
ASPIRADOR

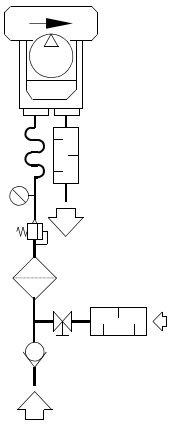

ASPIRATORE IN PARALLELO
PARALLEL VAACUM SERVICE
POMPE À VIDE EN PARALLÈLE
ASPIRADOR EN PARALELO
PARALLEL ARBEITENDER VAKUUMPUMPE
ASPIRADOR EM PARALELO

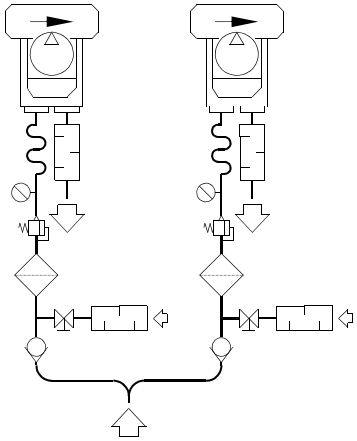

LEGENDA, KEY – ACCESSORIES, ZUBEHÖRLISTE, LÉGENDE ACCESSOIRES, TABLA DE ACCESORIOS, LEGENDA DOS ACESSÓRIOS

Item Item Composant Item Ítem Item		Denominazione Name Désignation Denominación Kennzeichnung Nome	Item Item Composant Item Ítem Item		Denominazione Name Désignation Denominación Kennzeichnung Nome
1		Filtro - Filtro in linea Filter - Inline filter Filtre - Filtre en ligne Filtro - Filtro en línea Filter – Leitungsfilter Filtro - Filtro da linha	7		Valvola di ritegno Check valve Clapet anti-retour Válvula de retención Rückschlagventil Válvula de retenção
(2)		Silenziatore Silencer Silencieux Silenciador Schalldämpfer Silenciador	8		Valvola Valve Vanne Válvula Ventil Válvula
3		Manicotto flessibile Flexible sleeve Manchon flexible Manguito flexible Flexibles Anschlussstück Luva flexível	(9)		Scambiatore Cooler Échangeur Intercambiador Wärmetauscher Permutador
4		Manometro – Vuotometro Pressure gauge - Vacuum gauge Manomètre – Vacuomètre Manómetro – Vacuómetro Manometer – Vakuummeter Manômetro – Manômetro de vácuo	(10)		Termometro Thermometer Thermomètre Termómetro Thermometer Termômetro
5		Pressostato – Vuotostato Pressure switch – Vacuum switch Pressostat – Vacuostat Presostato – Vacuóstato Druckschalter – Vakuumschalter Pressóstato – Interruptor de vácuo	(11)		Termostato Thermostat Thermostat Termostato Thermostat Termóstato
6		Valvola limitatrice Pressure relief valve Soupape de limitation Válvula limitadora Sicherheitsventil Válvula limitadora	(x) SE NECESSARIO (x) IF NECESSARY (x) SI NÉCESSAIRE (x) SI NECESARIO (x) SOFERN ERFORDERLICH (x) SE NECESSÁRIO		

8 GENERAL INFORMATION 31
8.1 PURPOSE OF THE MANUAL 31
8.2 UNIT AND MANUFACTURER'S IDENTIFICATION 31
8.3 REQUEST FOR ASSISTANCE - AFTER-SALES SERVICE 31
8.4 REPLACEMENT PARTS 31
8.5 TESTING, WARRANTY AND LIABILITY 32
9 SAFETY RULES 32
9.1 GENERAL NOTES ON SAFETY AND FOR THE USER 32
9.2 CONDITIONS OF INSTALLATION AND NORMAL OPERATION 33
9.3 FAULT CONDITION AND MAINTENANCE 33
9.4 RESIDUAL RISKS 34
10 FORESEEN USE 34
10.1 CONDITIONS OF USE 34
10.2 SPECIAL VERSIONS 35
10.3 PROHIBITIONS 36
10.4 REASONABLY FORESEEABLE IMPROPER USE 36
11 STORAGE AND TRANSPORT 37
12 INSTALLATION 38
12.1 INSTALLATION CONDITIONS 38
12.2 HORIZONTAL INSTALLATION 39
12.3 INSTRUCTIONS FOR REPOSITIONING SILENCER HOUSINGS 39
12.3.1 CK TYPE 90° MANIFOLD (accessory) USE 40
12.4 VERTICAL INSTALLATION ON THE COVER 40
12.5 ELECTRIC MOTOR 41
12.5.1 CONNECTION 41
12.5.2 INVERTER POWERED ELECTRIC MOTOR 42
12.5.3 ROTATION DIRECTION 42
13 STARTUP 42
13.1 PRELIMINARY CHECKS 43
13.2 OPERATION 43
13.3 STOPPING 43
14 MAINTENANCE 43
14.1 PERIODICAL CHECKS 43
14.2 PERIODICAL MAINTENANCE AND TROUBLESHOOTING 44
14.3 REPLACING THE SOUND ABSORBING MATERIAL 45
14.4 INTERNAL CLEANING 45
14.5 LIFE OF BEARINGS 45
14.6 OPERATION PROBLEMS 46

8 GENERAL INFORMATION

8.1 PURPOSE OF THE MANUAL

- The purpose of the manual is to provide the operator and maintenance personnel with "instructions for use" to prevent and minimise risks during the interaction of man and unit.
- The information was prepared by the manufacturer in the original language (ITALIAN) according to the principles of professional writing and in compliance with the applicable regulations.
- To facilitate its reading and understanding, the principles of communication best suited to the characteristics of the recipients have been adopted as far as possible.
- Keep the manual and enclosed documentation for the entire service life of the unit in a known and easy to access place so that it is always at hand for reference.
- To easily find specific information, see the table of contents.
- Any observations made by recipients can be an important contribution to improving the after-sales services provided by the manufacturer.
- Some information may not entirely match the actual configuration of the work unit delivered.
- Some parts of the text, or those of considerable importance, are indicated by symbols, whose meaning is described:

	These are generic or specific **DANGER** symbols and indicate hazards that can cause even serious **accidents to people** if the required precautions are not taken.
	This is the **PROHIBITED** symbol and indicates operations that must not be carried out because they can result in even serious **accidents to people**.
ATTENTION	The word ATTENTION is used to provide additional information and in particular to point out hazards that can cause **serious damage**.
NOTES FOR THE USER	NOTES are used to provide information allowing the user to make best use of the unit, with best performance, and for safety and respecting the environment.

8.2 UNIT AND MANUFACTURER'S IDENTIFICATION

The nameplate gives all the unit's identification details, which should always appear in all correspondence between the user and manufacturer (e.g. requests for assistance or for replacement parts as described in par. 1.3).
The nameplate is placed on the machine:

It is strictly forbidden to remove or tamper with the nameplate.

8.3 REQUEST FOR ASSISTANCE - AFTER-SALES SERVICE

All requests for After-Sales Service intervention must be sent to the following email address:

- customercare@fpz.com

Specifying:

- Type of unit;
- Serial no.;
- Defect found;
- Use the RMA form enclosed with this manual

8.4 REPLACEMENT PARTS

All requests regarding replacement parts must be sent to the following email address:

- customercare@fpz.com

Specifying:

- Type of unit;
- Serial no.;

- Code of part to be ordered;
- Required quantity;
- Means of shipment;

8.5 TESTING, WARRANTY AND LIABILITY

Testing and inspection

- The entire unit is sent to the customer prearranged for installation, after passing the tests and inspections required by the manufacturer, in conformity with the applicable laws.

Warranty

- Warranties are defined in the general terms and conditions of sale.

Liability

- **FPZ S.p.A.** cannot be held liable for operation faults or generic failures caused by improper use of the unit or operations carried out by persons not authorised by **FPZ S.p.A.**

9 SAFETY RULES

9.1 GENERAL NOTES ON SAFETY AND FOR THE USER

The instructions listed below must be read carefully and become a fundamental part of daily procedures in the use and maintenance of all the equipment, in order to prevent any kind of accident, injury or damage.

- Do not start the unit until its operation is clearly understood.
- If any doubts arise, despite having read this manual carefully and completely, contact **FPZ S.p.A.**
- Make sure all personnel involved in the use of the unit are informed regarding the safety requirements.
- Before starting the unit, the operator must check the efficiency of the safety devices and for any obvious defects in the unit. In case of any defects, immediately notify **FPZ S.p.A.**
- Check the proper operation of all the safety devices every day.
- The safety devices must never be removed or disabled.
- During maintenance or repair work it may be necessary to exclude some safety devices from the service. This operation must be carried out by authorised personnel.
- Never attempt rash solutions.
- All installation, commissioning and maintenance operations must be carried out exclusively by **qualified personnel**.
- Do not modify the electrical connections on the unit.
- Do not wear clothes, jewellery or accessories that can get caught in moving parts.
- Always keep the area around the unit free of obstructions.
- Use appropriate **PPE** such as boots, gloves, goggles and work clothes.
- Pay attention to all danger and caution signs placed on the unit.
- Always apply and enforce the safety rules; in case of any doubts, always consult this manual before acting.
- The unit must be used only and exclusively for its intended purpose and in accordance with that contractually established with **FPZ S.p.A.**

Non-compliance with the unit's intended use can cause serious accidents

The unit must only be started:

- In conformity with the purposes of use, transport and handling specified in "FORESEEN USE",
- respecting the values given in the "SPECIFICATIONS" and RATING DATA.

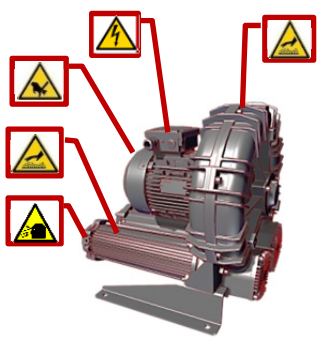

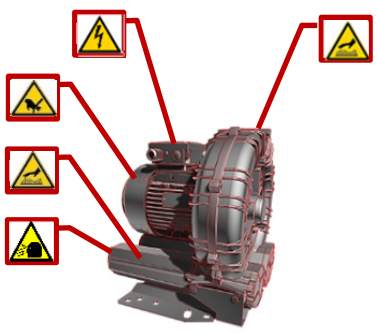

9.2 CONDITIONS OF INSTALLATION AND NORMAL OPERATION

Startup and operation must occur only under the following conditions:

- The unit must be completely assembled and intact, i.e. not damaged or tampered with.
- The silencer must be properly connected to the system piping.
- The machine must be securely fixed in place.
- The motor must be connected to a suitable control panel.
- If installed outdoors, protect the unit against the sun and weather.

Risk of injury due to shearing, crushing, entanglement!

During work on the unit there are risks of injury due to shearing, crushing or entanglement!
Therefore it must be carried out by technicians who handle and install the machine, taking the necessary safety measures and following the instructions given in this manual.

Danger due to escaping process fluids!

Danger due to overpressure with sudden release of process fluids (injury to the skin and eyes)!
Start the machine only if properly connected.

Danger due to electricity!

Improper behaviour can cause serious accidents!
Work on the electrical equipment must only be carried out by qualified and authorised electricians!
Before starting work on the unit or system, take the following precautions:

- disconnect the mains power;
- open the terminal box only after making sure the power is disconnected;
- take steps to prevent the power from being reconnected.

Danger of suction!

Danger due to negative pressure: sudden drawing in of hair and clothing! Start the machine only if properly connected.

Danger due to seizing of the impeller caused by performance values being exceeded

Use the blower, making sure the operating conditions comply with the values given in the SPECIFICATIONS.
Never operate the unit even temporarily with the inlet and/or outlet port closed.
Install a pressure-relief valve or equivalent circuit that can prevent excessive vacuum and/or overpressure and that enables compliance with the values given in the SPECIFICATIONS in this manual and the RATING DATA.
Turn the unit off immediately in case of any abnormal impeller noise! Then schedule maintenance.

Danger of burns caused by contact with hot surfaces of the unit!

In operation, in conformity with the values given in the "SPECIFICATIONS" and RATING DATA, the blowers / exhausters can reach high surface temperatures.
Use suitable PPE against the risk of burns. (Also see the section residual risks.)

9.3 FAULT CONDITION AND MAINTENANCE

Before starting routine maintenance on the unit, or for a fault, take the following safety measures:

- Disconnect the unit from the power supply via the main the switch.
- Place a sign: “DANGER! Maintenance work in progress." on the system control and the unit's control elements.
- **Allow the unit to cool**!
- Wait until the unit has completely stopped, i.e. that **the impeller is not rotating**, checking the electric motor fan.
- Ensure the absence of vacuum or overpressure in the unit and in the piping to be disconnected and that no fluid can escape from the unit and/or system!
- Follow the maintenance instructions in this manual.

Danger due to rotating impellers: cutting or shearing.

The rotating impeller can be accessed through the openings of the body and cover of the machine, once the manifolds or blind flanges are removed!
Never put hands or anything through these openings.

Danger due to electricity!

Improper behaviour can cause serious accidents!
Work on the electrical equipment must only be carried out by qualified and authorised electricians!
Before starting work on the unit or system, take the following precautions:

- disconnect the mains power;
- take steps to prevent the power from being reconnected;
- open the terminal box only after making sure the power is disconnected.

9.4 RESIDUAL RISKS

When designing the machines or systems on which the blower is to be installed, the following residual risks must be considered.

Danger due to hot surfaces!

In operation the unit may overheat, exposing the operator to contact with hot surfaces.
Do not touch the unit when in operation.
Before carrying out any operation after shutdown allow the unit to cool by waiting at least 20 minutes.

Danger due to rotating parts: electric motor cooling fan.

Although designed to reduce any danger, the machine has residual risks linked to the rotation of the fan.
Precautions to be taken:

- Do not wear loose fitting clothes
- Do not go near the machine with long and loose hair

Danger due to noise from the unit!

Some machines can produce high noise levels, even exceeding 80 dB(A).
The reference values are given in the specifications, which do not consider environmental reverberation.
Precautions to be taken:
Check the actual sound pressure of the machine in the place, and if necessary:

- Report the foreseen noise risk
- Arrange the use of PPE
- Insulate the place

10 FORESEEN USE

- FPZ side channel blowers / exhausters are designed to generate vacuum and overpressure and for conveying non-explosive, non-flammable, non-toxic and non-aggressive gases and air in continuous duty in a non-explosive environment.
- They consist of a toroidal chamber; between the body and cover there is an impeller with radial peripheral blades.
- FPZ side channel blowers / exhausters are designed and built for use in industrial plants and are equipped with three-phase or single-phase asynchronous bipolar electric motors in compliance with IEC 60034-1.

10.1 CONDITIONS OF USE

Non-compliance with the unit's intended use can cause serious accidents.

- This manual:
  MUST be read carefully and understood before carrying out any operations on the unit;
  MUST be strictly complied with;
  MUST always be at hand in the place where the unit is used.
- Installation must only be carried out by qualified personnel.

ATTENTION!	If installation is outdoors, protect the unit from the sun.

If installation is outdoors, protect the unit from the sun.
The maximum permissible pressure differentials given in the "SPECIFICATIONS" must never be exceeded. They are valid only under the following conditions;

- as a blower:
  gas intake temperature 20°C (+68°F) and atmospheric pressure 1013 mbar (abs.) (29.92 In Hg) measured at the inlet port
- as an exhauster:
  gas intake temperature 20°C (+68°F) measured at the inlet port and atmospheric backpressure 1013 mbar (abs.) (29.92 In Hg).

The ambient **temperature**, and the conveyed gas intake temperature, is permissible inside the range -15°C (+5°F) ÷ +40°C (+104°F) with the following provisions;

- for ambient temperature +30°C (+86°F) **reduce** the maximum pressure differentials given in the "SPECIFICATIONS" by 5%;
- for ambient temperature +40°C (+104°F) **reduce** the maximum pressure differentials given in the "SPECIFICATIONS" by 10%.

The graph to be used to reduce the maximum pressure differentials in case of ambient temperature between +21°C and +40°C (+70°F and +104°F) is given below

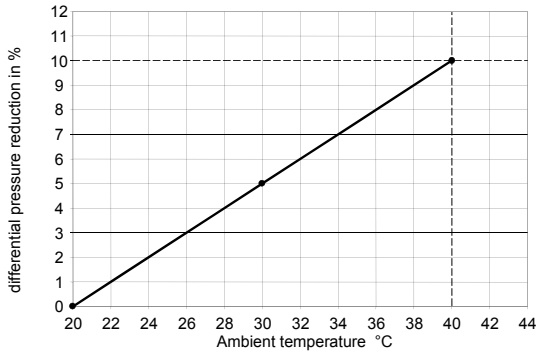

The unit should not be installed at more than 1000m a.s.l.; if higher, contact the FPZ after-sales service.

Danger due to limited visibility in the place where the unit is installed!

Make sure to always have the installed unit under control when carrying out any operation in the installation area.
The control elements must be placed so that the installed unit can be seen.
Danger of serious injury!

ATTENTION!	If the flow rate has to be reduced, use a bypass valve instead of throttling the suction or delivery.

- In case of suction in the place, and if on the system, protect the intake pipe using a suitable **filter** with maximum filtration of 100µm and check compliance with the maximum pressure/vacuum data given in the SPECIFICATIONS (max ΔP) :
- for use as a **blower** deduct the pressure loss (P_a) from the maximum compression indicated (max ΔP), i.e. $P_{working} \approx$ max ΔP - P_a (for $T_{ambient}$=20°C and $P_{ambient}$=1013 mbar)
- for use as an **exhauster** make sure the maximum vacuum at the inlet port is not exceeded.

10.2 SPECIAL VERSIONS

FPZ side channel blowers/exhausters can be manufactured in special or custom versions; the instructions given in this manual still apply to some of them.
The special versions manufactured, and for which that given above applies, are:

- **BPA version**
  Machines built to work in harsh environments and/or for conveying aggressive fluids, where aggressive means the presence of elements that can affect standard machine operation, such as humidity; as specified in point 2, conveying flammable, explosive or toxic gases, or installation in potentially explosive places, is not permitted.
- **TMS version**
  Machines that ensure mechanical seal between the parts that convey air or fluids, minimising leakage.
- **Special electric motors**
  On request, blowers/exhausters can be manufactured with motors having one or more of the following characteristics:
  - Special voltages
  - Higher levels of protection against solid bodies and/or liquids (standard IP55)
  - Higher insulation classes (standard Class F)
  - Protection devices such as thermal switches, heaters, PTC, PT100
- **IE2 motor**
  The side channel blowers/exhausters can be manufactured using class IE2 motors.
  Compared to the standard version, the performance and dimensions may vary; this information is given more precisely in the specific Data Sheets of the IE2 version.

Further customisation must be requested and agreed when ordering, subject to a feasibility appraisal by the Technical Department.

ATTENTION!	For maintenance of special version machines, contact FPZ.

10.3 PROHIBITIONS

THE FOLLOWING IS STRICTLY PROHIBITED:

- Using the unit in installations for unforeseen use.
- The suction and conveying of aggressive, corrosive and/or harmful fluids.
- Using the unit in conditions different from the values given in the "SPECIFICATIONS" and RATING DATA.
- Using the unit without having installed the suction filter.
- Operation with inlet and/or outlet port closed.
- Making conversions or changes to the unit, maintenance or repair work on own initiative or not envisaged in the manual. Maintenance work can be carried out only in compliance with that described in this user manual, exclusively by qualified personnel.

IT IS COMPULSORY TO:
- Check and comply with the intended use of the machine.
- Check and comply with the conditions of use specified in this manual.
- Comply with the installation conditions specified in this manual.
- Carry out the preliminary checks as specified in the section "STARTUP".
- Carry out maintenance as specified in section 7.

10.4 REASONABLY FORESEEABLE IMPROPER USE

Non-compliance with the unit's intended use can cause serious accidents.

Failure to comply with the prohibitions/obligations can result in technical faults, damage to the system or accidents.
Danger of serious injury!

- Listed below are some examples of improper use identified by risk analysis and practical experience, according to the conditions they can create.

IMPROPER USE	CONSEQUENCES	RISKS
IMPROPER USE LINKED TO NORMAL OPERATION		
Failure to comply with the distance for the motor air intake	Motor overheating and possible damage to the blower	RISK FOR THE MACHINE
Presence of operators and possible contact with the machine	Operator coming into contact with hot parts of the machine	RISK FOR THE OPERATOR
Use of loose clothing or untied long hair	Possible catching or suction in the machine or in the motor fan	RISK FOR THE OPERATOR
IMPROPER USE LINKED TO METHODS OF USE		
Failure to comply with the operating conditions (par. 2.2): - Ambient temperature outside the limits or incorrect - Altitude above 1000 m - Failure to consider system and filter pressure losses	Machine performance different from the data given, possible motor faults and seizing of the impeller	RISK FOR THE MACHINE
Failure to install the filter (for use with suction in the place)	Particles entering the blower with seizing of the impeller	RISK FOR THE MACHINE
Operation outside curve (P/Q) (Pressure /Flow rate)	Machine performance different from the data given, possible motor faults and seizing of the impeller	RISK FOR THE MACHINE, SYSTEMS AND OPERATORS
Rigid connection between the machine and system	Abnormal vibrations for the machine and/or system with possible seizing of the impeller.	RISK FOR THE MACHINE, SYSTEMS AND OPERATORS

Use of the unit with current values not corresponding to nominal	Possible overheating of the machine and motor when powered by an inverter.	RISK FOR THE MACHINE
IMPROPER USE LINKED TO MAINTENANCE WORK		
Failure to clean the filter	Seizing of the impeller	RISK FOR THE MACHINE
Failure to eliminate of layers of surface dust	Machine overheating	RISK FOR THE MACHINE, SYSTEMS AND OPERATORS
FAULT CONDITIONS / EMERGENCY CONDITIONS		
Not stopping the machine when making an abnormal noise.	Damage with possible seizing of the impeller, machine overheating and possible motor damage.	RISK FOR THE MACHINE, SYSTEMS AND OPERATORS

11 STORAGE AND TRANSPORT

Danger due to suspended loads.

The tipping over or falling of heavy loads can cause crushing and injury Place the packages in a stable way.
Do not place loads on the packages.

- Store the machine in a dry place, if possible keeping it in its packaging.
- Do not remove the protection from the openings.

Danger due to lifting of heavy loads!

The falling of heavy loads can cause crushing and injury or even death!
Before carrying out handling operations (lifting, moving, carrying, storage) check the weight, or mass (m), of the unit given in the "SPECIFICATIONS" and decide the most suitable method in order to ensure maximum safety.
Therefore, all the risk prevention measures must be met, including any local and/or particular regulations on safe handling:

- by suitably qualified and adequately instructed personnel;
- using appropriate means;
- organising the work so that it is done with minimum risk and in safe and healthy conditions;
- with a safe and stable support surface;
- with the use of suitable work clothes and personal protection equipment (gloves and goggles, safety shoes and helmet);
- on a work area with sufficient space, flat floors, without obstacles;
- avoiding knocking, jerking and jolting.

Units weighting more than 25 kg have lugs for handling.

Different packaging is used, depending on the size and weight; once the package is brought near the installation area, open it, take out the documents and then remove the machine as illustrated below.

m<25 kg

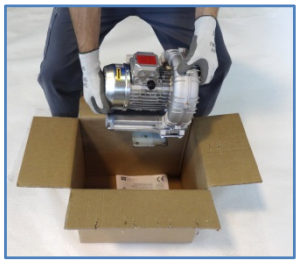

ATTENTION!

Lifting the unit in any way other than that indicated is strictly prohibited. Use the special lugs on the body of the blower, motor or base

m>25 kg

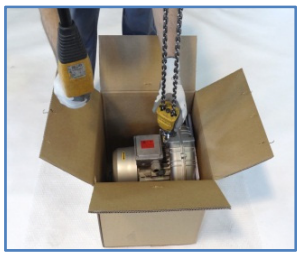
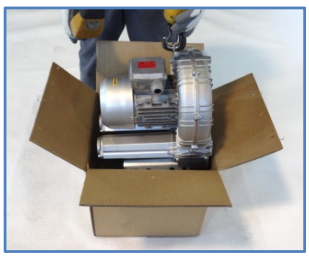

m>25 kg

m>25 kg

- In some cases the lifting eye is turned 90°.
- Before lifting the machine, proceed as follows:
- Undo the screw
- Put the lifting eye back in the correct position
- Tighten the screw

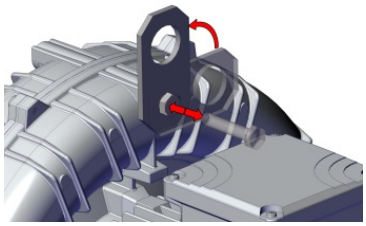

12 INSTALLATION

12.1 INSTALLATION CONDITIONS

- Make sure the conditions of use as described in section 3 are complied with, then proceed with installation of the machine as specified below.

Danger due to limited visibility in the place where the unit is installed!

Make sure to always keep an eye on the installed unit when carrying out any operation in the installation area.
The control elements must be placed so that the installed unit can be seen.

Danger due to vibration!

Regularly check the fixing of the unit to the support structure.
Excessive vibration of the unit can seriously damage the machine.

NOTE FOR THE USER

Vibration dampers are supplied with machines from K07 to K12.
On request, vibration dampers are also available on the other machines.

- The unit's support surface must be flat, sturdy, stable and as level as possible.
- The unit must be installed on a structure that does not transmit vibrations. Do not install the unit on structures that can transmit or amplify the noise.
- Installation of the unit must always be done using vibration dampers.
- Installation of the unit must ensure that motor ventilation is not impeded by obstacles placed in the immediate vicinity. Therefore, the motor air intake must remain free, ensuring a distance of at least 50mm between the motor fan cover and any structure.

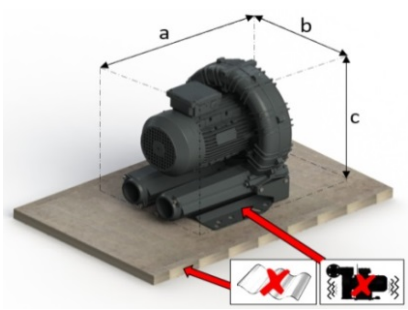

- Connect the pipes using flexible sleeves, without resting the weight of the pipes on the unit, with the exception of a possible filter in case of suction in the place.
- Determine the dimensions a, b, c to allow adequate space for installation of the unit with its accessories (Dimensions available in the first section).

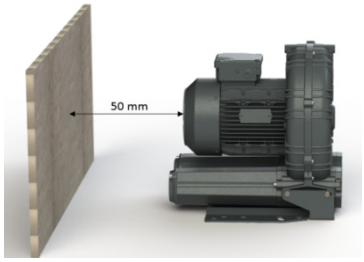

ATTENTION!	When installed outdoors, protect the unit against the sun and weather.

To avoid overloads caused by pressure fluctuations, install a bypass pressure-relief valve on the suction pipe in case of operation as an exhauster, and on the delivery when operating as a blower.

If the flow rate has to be reduced, use a bypass valve instead of throttling the suction or delivery.

Protect the suction pipe with a suitable filter with degree of filtration less than or equal to 100 µm. Foreign bodies are: dust, sand, gravel, dirt in the pipes, cutting burrs and shavings, welding slag and spatter, metal burrs and sealant residuals produced when connecting the pipes. Replace the filters regularly!

Size the pipes and choose accessories that minimise pressure losses; therefore:

- do not fit pipes narrower than the ports of the machine.
- when installing several machines in parallel, suitably size the manifold and the main line.
- use large-radius curves and not elbows.
- do not install valves with a smaller flow than nominal and check valves with shutter opposed by spring (the check valve with lowest pressure loss is the lightened non-return valve).
- when used for oxygenation, choose diffusers with low flow resistance (low pressure loss).

Danger due to foreign bodies and dirt entering the unit!

The ingress of even tiny foreign bodies causes serious damage to the unit with probable breakage of the impeller blades and the danger of debris being thrown out!

See INSTALLATION DIAGRAMS in the first section.

12.2 HORIZONTAL INSTALLATION

- Units supplied with standard set-up are ready to be installed in the horizontal position by means of the feet.
- The feet have holes for fixing; use all the holes and choose the appropriate type of screw.
- Remove the protection on the ports before checking the rotation direction and before final connection.
- To connect the unit to the piping, remove the flanges from the silencer housings to make the appropriate connections using flexible sleeves, thereby avoiding rigid connections which can cause stress and harmful vibrations.
- Refit the flanges on the silencer housings complete with gaskets and tighten.

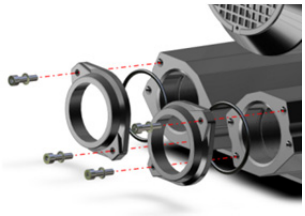

Check the motor rotation direction (see par. 5.2 ROTATION DIRECTION)

12.3 INSTRUCTIONS FOR REPOSITIONING SILENCER HOUSINGS

- The SCL K MOR series has been designed for maximum flexibility in positioning the silencer housings in order to allow different installation configurations.
- The blower is normally supplied with silencers positioned as shown in figure **A**.
- If this arrangement has to be changed, establish the required arrangement of the silencer housings.

See the diagram provided in the first section of this manual

- Remove and refit the housings and blind flanges according to the following diagram to obtain the desired configuration

Removing the blind flange (B)
- Place the unit horizontal, resting the feet on a flat and stable surface.
- Undo the screws and remove the blind flange and gasket

Removing the silencer housing (C)
- Undo the screws.
- Remove the silencer housing with gasket.

Removing the flange (D)
- Undo the screws.
- Remove the flange and gasket.
- Reassemble by proceeding in reverse order, remembering the gaskets.

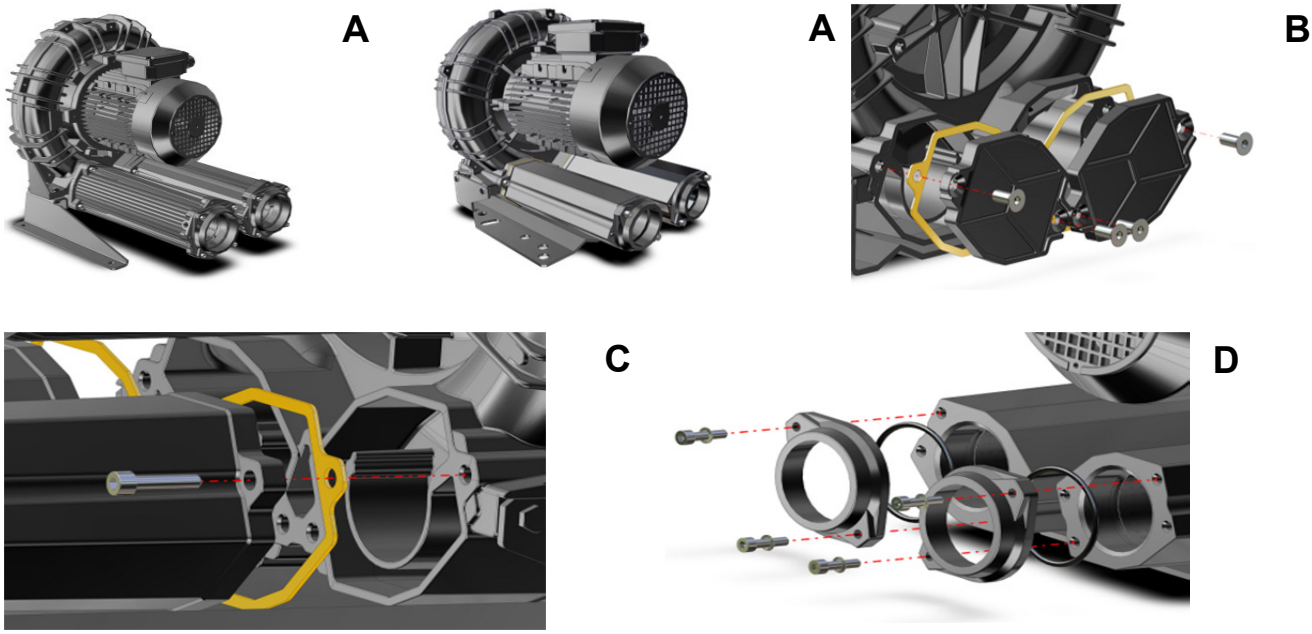

Danger due to rotating parts: impeller!

The danger of shearing due to the rotating impeller can exist even when the machine off, if it is started manually.
Therefore use suitable work clothes and personal protection equipment.

12.3.1 CK TYPE 90° MANIFOLD (accessory) USE

- For different connection configurations, use the CK type 90° manifold installed only on the cover openings.
- See the possible configurations as previously illustrated.

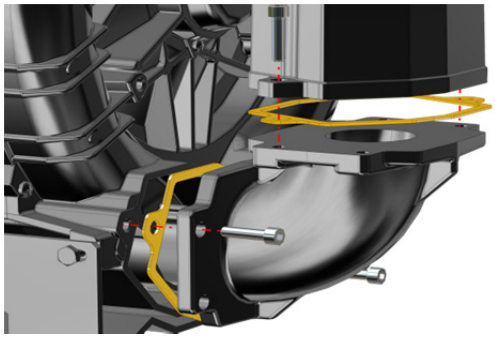

Fitting the CK type 90° manifold
- Remove the silencer as previously described.
- Insert the gaskets between the cover and manifold.
- Tighten the respective screws
- Assemble the silencer by proceeding in reverse order.

See par. 5.1 for INSTALLATION CONDITIONS

12.4 VERTICAL INSTALLATION ON THE COVER

The units can be installed with the working axis vertical, as follows:

- Using vibration dampers fitted directly on the cover (E)
- Using a special foot for vertical fixing, available as an accessory (F).

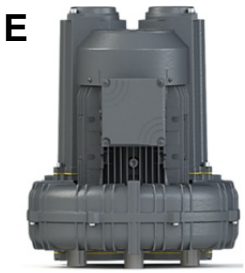

Non-compliance with the unit's intended use can cause serious injury.

Regularly check the fixing of the unit to the support structure.
Excessive vibration of the unit can seriously damage the machine.

NOTE FOR THE USER	A special foot is available as an accessory for fixing the unit vertically on the cover. The foot has holes for fixing; use all the holes and choose the appropriate type of screw.

NOTE FOR THE USER	Vibration dampers are supplied with machines from K07 to K12. On request, vibration dampers are also available on the other machines.

ATTENTION!	Avoid the possibility of water stagnation, especially in case of installation of the unit with vertical axis.

ATTENTION!	Check the motor rotation direction. (see par. 5.2 ROTATION DIRECTION)

12.5 ELECTRIC MOTOR

Make sure to comply with all the safety measures and instructions given in the electric motor instruction manual.

Danger due to electricity!

- Improper behaviour can cause serious injury.
- Work on the electrical equipment (installation, maintenance) must only be carried out by qualified and authorised electricians!
- Before starting work on the unit or system, take the following precautions:
  - make sure the machine is NOT powered;
  - take steps to prevent the power from being reconnected;
  - open the terminal box only after making sure the power is disconnected!
- The terminal box must not contain:
  - foreign bodies;
  - impurities;
  - moisture.

Close the terminal box with the lid and seal the openings of the cable glands to prevent dust, water and moisture from entering.
Check the seals regularly.

- If a faulty unit is touched there is risk of electric shock!

Install the motor circuit breaker.
Have an electrician regularly check the electrical equipment.

ATTENTION!

In case of various motor starts in the space of an hour, there are limitations which can seriously damage the unit if ignored.
Regarding this, refer to the electric motor instruction manual.

12.5.1 CONNECTION

ATTENTION!

Incorrect connection of the motor can seriously damage the unit.
The power supply of the motor and any auxiliary equipment must use wires of suitable thickness in order to avoid abnormal overheating and high voltage drops.

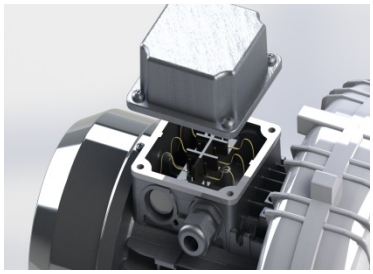

- Make sure the supply voltage and frequency match the rating data.
- Connect the earth wire of the motor to the terminal marked with the following symbol ⏚ always before connecting to the mains and check the leakage capacity. The earth wire is identified by its colour (yellow/green).
- Connect to the mains by referring to the diagram in the terminal box.
- Use the openings in the cable glands to run the power cables inside the terminal box.
- Once the terminal board connections are done, tighten the cable gland to secure the cables.
- The electrical connection terminals must be tightened to prevent high contact resistances and consequent overheating.
- Ensure the insulation gaps and distances between the different wires as required by the standards.
- All screws used for closing the terminal board must be tightened down. Damaged screws must be immediately replaced with screws of equivalent or better quality.

The connection must ensure:

- lasting safety over time.
- The ends of the wires must not protrude.
- The fuses only protect against short circuits and not the motor.
- Fuse ratings must take account of peak currents, especially in case of direct starting.
- The protection with motor circuit breaker (thermal or amperometric) is essential against the risks of overload, in the absence of a mains phase, excessive voltage fluctuation or stuck rotor.
- Adjust the motor circuit breaker to the rated current as the maximum value.

12.5.2 INVERTER POWERED ELECTRIC MOTOR

ATTENTION!

When powered by an inverter, the unit's nominal pressure or vacuum characteristics cannot be maintained.
For the performance of an inverter powered unit, contact the FPZ after-sales service.

The power supply via inverter is always the responsibility of the installer, who must ensure compliance with the standards and:

- checking and any measures necessary to comply with the limits of immunity and emission laid down by the standards;
- checking the suitability of the system and the inverter for operation with standard motors, i.e. class F, or the need for specific motors for these types of operation.

12.5.3 ROTATION DIRECTION

SCL K blowers - exhausters must be used with the rotation direction indicated by the arrow on the electric motor fan cover.

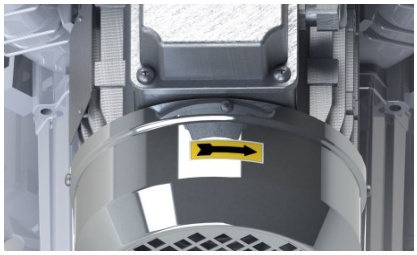

- To check the rotation direction, switch the motor on briefly and observe the fan.
- To change the rotation direction, invert the power cable connections, leaving the earth connection unchanged.

Refer to the connection diagram located in the terminal box

ATTENTION!

The position of the motor does not always allow the rotation direction to be checked, therefore it is advisable to do this check before installation of the system.

13 STARTUP

Non-compliance with the unit's intended use can cause serious accidents.

The unit must only be started:

- after carefully reading, understanding and complying with this user manual ("SAFETY RULES" and "INSTALLATION");
- in conformity with its intended use as prescribed in "FORESEEN USE";
- respecting the values given in the "SPECIFICATIONS".

13.1 PRELIMINARY CHECKS

Before starting the machine for use, carry out the following preliminary checks:

- If the unit has not been started up for some time, check its condition and, if necessary, remove any dust from the external surfaces;
- Deactivate/open any pipe closing devices (shut-off valves, solenoid valves, etc.) before starting the unit.
- **Never start and operate the unit with the inlet and/or outlet port closed!**
- Make sure the ambient and conveyed gas suction temperatures come within the values: -15°C (+5°F)÷ +40°C (+104°F);
- Check correct operation of the pressure-relief valve (not supplied).

13.2 OPERATION

The unit can be started for use after carrying out the preliminary checks.

- Start the unit by switching on the power to the electric motor.
- Check the operating pressure or vacuum and also compliance with the values given in the “SPECIFICATIONS”. Pressure losses in the pipes are often underestimated but are decisive factors for the operating differential pressure.
- Measure the motor absorption and check compliance with the rated value.

13.3 STOPPING

- The unit must be stopped by switching off the power supply to the motor.
- In case of shutdown, make sure to operate the unit with the inlet open for about 20 minutes.
  This operation allows the removal any condensate in the suction chamber.

14 MAINTENANCE

In order to prevent faults and damage it is important to periodically check the units in operation, therefore it is advisable to adopt a maintenance plan in line with this Manual, providing for:

- Periodical checks
- Periodical maintenance and troubleshooting

14.1 PERIODICAL CHECKS

The units in operation should undergo periodical inspections by qualified personnel, in order to prevent failures that can directly or indirectly cause damage.

A) With the unit in operation periodically check the following parameters:

- Delivery temperature
- Operating pressure and/or vacuum
- Electric motor current absorption
- Vibration
- State of the filter and corresponding pressure loss

Danger of burns caused by contact with hot surfaces of the unit!!

When in operation the blowers / exhausters can reach high surface temperatures.
Before carrying out any operation after shutdown wait at least 20 minutes for the unit to cool.

Measurement of vibrations

The measurements for determining the vibration velocity [mm/s] must be done with an electronic vibration meter, at the following places:

- **Points P1** and **P2 (front bearing):** place the vibration meter near the front bearing, adopting the highest value.
- **Points P3** and **P4 (rear bearing):** place the vibration meter on the electric motor casing near the bearing housing (not on the fan cover), adopting the highest value.

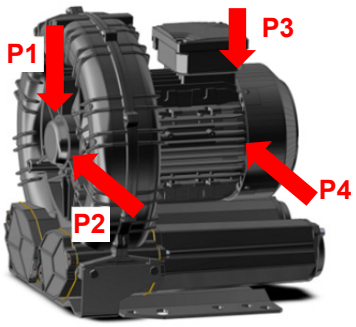

Legend: Classification of machines: ***Class I*** **= SCL with electric motor of power ≤ 15kW** ***Class II*** **= SCL with electric motor of power > 15kW** **Appraisal zones:** ***Zone A*** **= SCL with vibration (a) inside this zone they are considered acceptable for a long-term duty.** ***Zone B*** **= SCL vibration (a) inside this zone they are considered unsuitable for a continuous long-term duty. The machine can be operated in these conditions for a limited period, as long as there is the opportunity for a suitable corrective action.**	**Effective vibration velocity value [mm/s]**	***Class I*** **(≤ 15kW)**		**Effective vibration velocity value [mm/s]**	***Class II*** **(>15kW)**
	a<1.8	***A***		a<2.8	***A***
	1.8<a<4.5	***B***		2.8<a<7.1	***B***

Danger due to seizing of the impeller caused by excessive vibration!

Vibration values higher than Zone B (table of effective vibration velocity value) are considered NOT permissible and can cause damage to the machine and therefore serious injury to operators.

- **In case of noise and/or abnormal vibration indicating the possibility of seizing of the impeller, move away and turn the unit off immediately!**

Variations in normal working conditions (increases in power absorption, abnormal noise, vibration, excessive overheating of the service fluid) are indications of a unit malfunction.
Also, compare the measured values with those given in the "SPECIFICATIONS.

B) With the unit stopped and cooled, periodically carry out the following checks:

- Dust: check and remove deposits from the external surfaces of the unit.
- Suction filter (if fitted): every 10-15 days, check and clean or replace the filter cartridge. The dirty cartridge will create strong suction resistance and consequently a higher pressure differential, power absorption and operating temperature.

Danger due to high temperatures!

To limit the formation of surface layers of dust that can affect the natural heat exchange between the unit and the environment, ensure regular cleaning and removal with suitable equipment.
The suction and/or delivery pipes must not be dirty or clogged! Wear suitable PPE.

14.2 PERIODICAL MAINTENANCE AND TROUBLESHOOTING

Refer to the following section, "OPERATION PROBLEMS", to identify possible critical situations and types of failures.

- In case of periodical maintenance for cleaning and replacement of some components, as well as in case of failure, it is necessary to disconnect and remove the machine from the system.

Danger due to electricity.

Before carrying out any operation, make sure the machine is NOT powered.

Risk of injury due to shearing, crushing, entanglement.

During work on the unit there are risks of injury due to shearing, crushing or entanglement!
Therefore it must be carried out by qualified personnel who handle and install the machine, taking the necessary safety measures and following the instructions given in this manual.

Danger due to residual negative pressure or overpressure.

For residual overpressure: possible release of process fluids with risk of injury to the skin and eyes;
For negative pressure: possible drawing in of hair and clothing.
Disassemble the machine only after closing and draining the system connected to it.

14.3 REPLACING THE SOUND ABSORBING MATERIAL

When replacing the sound absorbing material in the silencers, proceed as follows:

- Undo the screws (1)
- Disconnect the silencer housings (1)
- Remove the sound absorbing material from the silencer housings (2)
- Recover the support mesh (2)
- Replace the sound absorbing material and assemble by proceeding in reverse order.

1

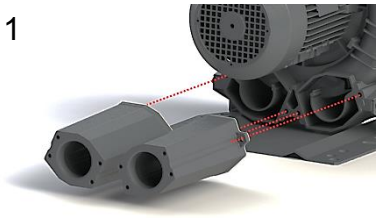

2

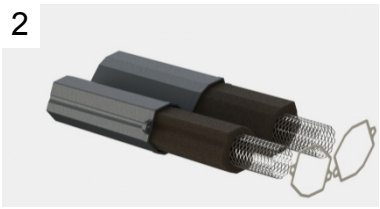

14.4 INTERNAL CLEANING

To clean the inside, proceed as follows:

- Place the unit upright, resting the fan cover on a flat and stable surface (1)
- Undo the screws (1)
- Remove the foot (1)
- Undo the cover screws (2)
- Remove the cover (3)
- Undo the screw and remove the washer (4)
- Remove the bearing and bearing cover (5)
- Remove the impeller (6)
- Clean and assemble by proceeding in reverse order
- Seal with System RS01 Arexons or Loctite 5970

1

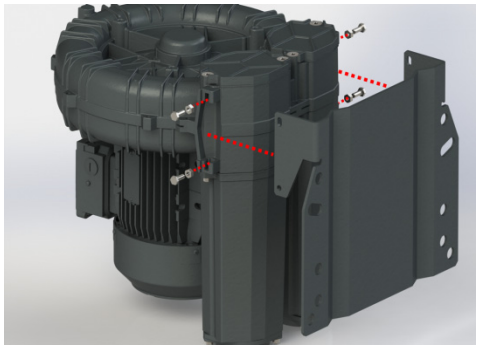

2

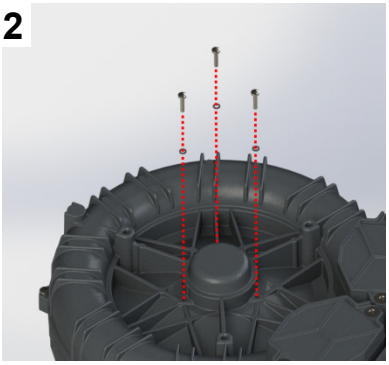

2

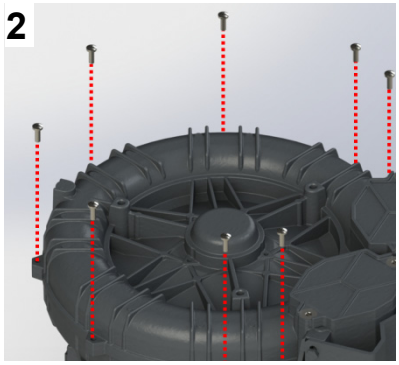

3

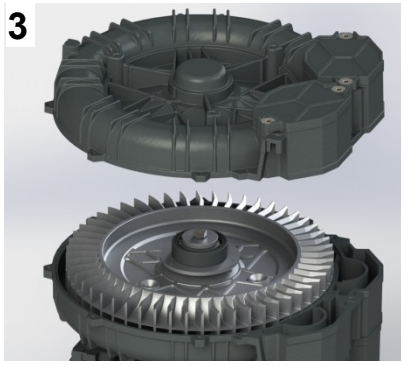

4

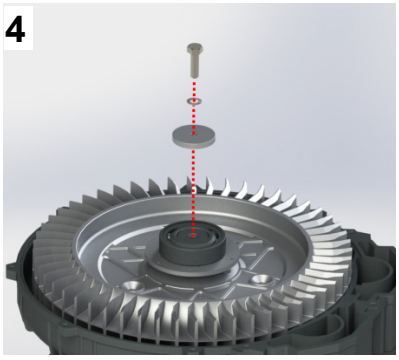

5

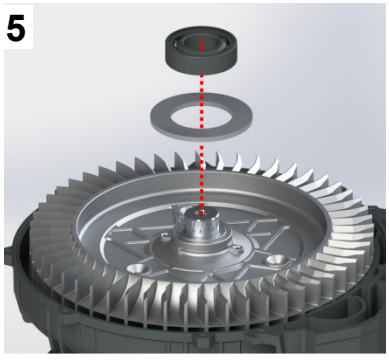

6

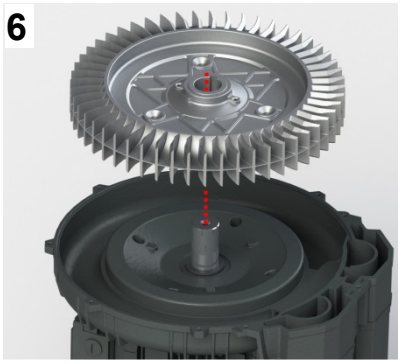

14.5 LIFE OF BEARINGS

- In normal operating conditions (values given in the SPECIFICATIONS) the machine's bearings must be replaced by FPZ personnel after 20000 hours or 3 years, whichever comes first.

ATTENTION	The unit's bearings must only be replaced: if all the instructions, parts list, and the section/exploded view of the respective unit are available.

14.6 OPERATION PROBLEMS

Problem	Seriousness[6]	Cause	Cure
The unit does not start	F	Incorrect electrical wiring.	Have the electrical connection checked by the Technician, referring to the diagram in the terminal box.
	F	Unsuitable supply voltage.	Make sure the supply voltage, measured at the motor terminals, matches the rated voltage +/-10%.
	G	The impeller is stuck.	Have the unit repaired by FPZ After-Sales Service.
Insufficient or no air flow	G	The suction filter is clogged.	Have the cartridge cleaned or replaced by the Technician.
	G	Wrong frequency (for inverter powered units).	Correct the frequency.
	G	Profile of impeller blades modified (due to deposits on the profile).	Have the impeller checked by FPZ After-Sales Service
Insufficient or no differential pressure	F	Wrong rotation direction.	Have the rotation direction reversed by the Technician, switching around the two power supply wires.
	G	Leak in the system	Find the leak and seal it.
Current absorption higher than the permissible value	F	Incorrect electrical wiring.	Have the electrical connection checked by the Technician, referring to the diagram in the terminal box.
	F	Supply voltage drop.	Have the supply voltage at the terminals restored within the permissible values by the Technician.
	G	The suction filter is clogged.	Have the cartridge cleaned or replaced by the Technician.
	G	The unit has accumulated deposits inside.	Have the unit cleaned inside by FPZ After-Sales Service.
	G	The unit is operating at a pressure and/or vacuum higher than the permissible value.	Operate on the system and/or control valve to decrease the pressure differentials.
High delivery air temperature	G	The unit is operating at a pressure/vacuum higher than the permissible value.	Operate on the system and/or control valve to decrease the pressure differentials.
	G	The suction filter is clogged.	Have the cartridge cleaned or replaced by the Technician.
	G	The unit has accumulated deposits inside.	Have the unit cleaned inside by FPZ After-Sales Service.
	G	Suction and/or delivery pipes obstructed.	Have the obstructions removed by the Technician.
	G	Intake air temperature above 40°C (+104°F).	Use heat exchangers to reduce the intake air temperature.
Abnormal noise	F	The sound absorbing material is damaged.	Have the sound absorbing material replaced by the Technician.
	G	The impeller rubs against the casing: - The unit is operating at a pressure/vacuum higher than the permissible value.	Operate on the system to decrease the pressure differentials.
	G	- Reduction of assembly play due to internal deposits (dust, dirt on pipes, process residues, etc.).	Have the unit cleaned inside by FPZ After-Sales Service.
	G	Worn bearing.	Have the bearing replaced by FPZ After-Sales Service.
	F	Unit installation position unsuitable.	Have the units installed on structures that cannot transmit or amplify the noise (tanks, metal plates, etc.) by the Technician.
Abnormal vibration	G	The impeller is damaged.	Have the impeller replaced by FPZ After-Sales Service.
	G	The impeller has accumulated deposits.	Have the unit cleaned inside by FPZ After-Sales Service.
	G	Unit fixed without vibration dampers.	Have the unit secured with vibration dampers by the Technician.
	F	Rigid connection to the system	Have flexible sleeves installed between the unit and the pipes by the Technician.
	G	Faulty bearing on blower side or motor side.	Have the bearing replaced by FPZ After-Sales Service.
Leaks	G	Faulty gaskets on the silencer.	Have the gaskets checked and, if necessary, replaced by FPZ After-Sales Service.
	G	Faulty gaskets on the cover.	Have the gaskets checked and, if necessary, replaced by FPZ After-Sales Service.

[6] Divided as follows: F for functional fault and G for serious fault

RMA – REPAIR REQUEST FORM and DECLARATION OF DECONTAMINATION

Fill out and return to: E-mail customercare@fpz.com

MACHINE / PRODUCT DATA

Type of machine / Model		Serial no.		purchase document no.	
Cause	☐ Repair Warranty		☐ Repair	☐ Periodical maintenance	
Description of defect	☐ Blocked		☐ Noisy	☐ Motor failure	
	☐ Other:				

DECLARATION OF DECONTAMINATION

- For the safety of our employees and compliance with the legal requirements during handling of substances hazardous to health and the environment, this declaration must be filled out completely and sent for each machine / product.
- Without said declaration filled out completely, repair cannot be carried out.
- The declaration must be sent with the shipping documents.

1. The machine / the product

☐ has NOT come into contact with hazardous substances. In case of repair / disposal, there is no risk to people and the environment. Go to point 3.

☐ has come into contact with hazardous substances. Go to point 2.

2. Information on contamination

Type of system on which the machine is installed:

_____

And it has come into contact with the following substances subject to the requirement of labelling or dangerous to health / environment:

Trademark	Chemical name	Hazardous substance class	Characteristics (e.g. toxic, flammable, corrosive)

☐ The machine / product has been washed and cleaned on the outside. Specify the decontamination method used:

_____

3. Legally binding declaration

The undersigned hereby declares that the details given on this form are true and complete.

APPLICANT'S DETAILS

Company name:		Date	
Street:		Postal Code	
City:		Province	
Contact person:			
E-mail / tel. no.			

COMPLETION BY FPZ CUSTOMER CARE

RMA no.	
NOTES	

FPZ BLOWER TECHNOLOGY

REGENERATIVE BLOWERS - PRESSURE

SCL K03 / K04 / K05 / K06

MS SERIES

SN 1874-9 1/2

TECHNICAL CHARACTERISTICS
- Aluminium alloy construction
- Smooth operation
- High efficiency impeller
- Maintenance free
- Mountable in any position
- Recognized TEFC - cURus motor

OPTIONS
- Special voltages (IEC 38)
- Surface treatments

ACCESSORIES
- Inlet and/or inline filters
- Additional inlet/outlet silencers
- Safety valves
- Flow converting device
- Optional connectors

Dimensions in inches.
Dimension for reference only.

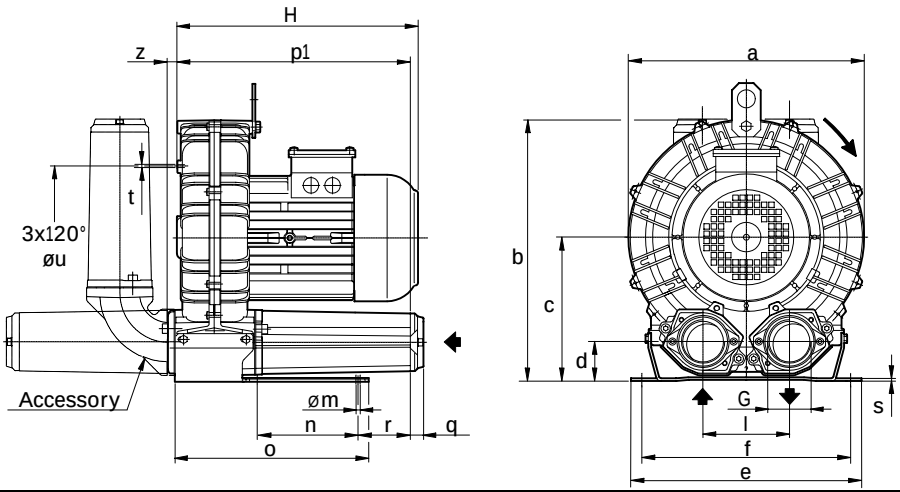

Model	a	b	c	d	e	f	G	l	m	n	o	p1	q	r	s	t	u	z
K03-MS	9.49	10.55	5.79	1.69	9.06	8.07	1"1/4 NPT	3.39	0.39	3.27	5.59	8.07	0.71	2.95	0.16	M6	5.51	0.47
K04-MS	11.22	12.40	6.77	1.93	10.04	8.86	1"1/2 NPT	4.02	0.47	3.74	6.73	8.74	0.71	2.76	0.16	M6	6.89	0.71
K05-MS	12.87	14.37	7 87	2.13	12.60	10.24	2" NPT	4.72	0.59	4.53	10.43	12.60	0.71	3.86	0.16	M8	7.87	0.75
K06-MS	14.80	15.47	8.07	2.13	12.80	11.42	2" NPT	4.92	0.59	5.51	10.71	13.15	0.71	3.35	0.16	M8	9.45	0.75

Model	Maximum flow Scfm		Installed power Hp		Maximum differential pressure △p (In WG)		Noise level Lp dB (A) (1)		Overall dimensions H	Weight
	60 Hz 3500 rpm	50 Hz 2900 rpm	60 Hz 3500 rpm	50 Hz 2900 rpm	60 Hz 3500 rpm	50 Hz 2900 rpm	60 Hz 3500 rpm	50 Hz 2900 rpm	Inches	Lbs
K03-MS	52	43	3/4	3/4	64	60	62.0	60.0	10.43	24.30
			1	1	95	77	62.3	60.3	11.97	26.50
K04-MS	98	81	1 ½	1 ½	58	80	64.8	62.8	11.65	36.40
			2	2	85	100	65.0	63.0	13.78	43.00
			3	-	120	-	65.2	-	13.78	49.60
K05-MS	156	129	2	2	52	70	70.5	68.5	13.20	51.80
			3	3	90	110	70.8	68.8	13.20	58.40
			4	4	128	120	71.1	69.1	14.40	67.20
K06-MS	216	179	3	3	50	65	73.0	71.0	13.54	68.70
			4	4	75	95	73.3	71.3	14.17	71.65
			5 ½	5 ½	110	140	73.6	71.6	14.17	77.60
			6 1/5 (2)	-	132	-	73.9	-	14.45	77.60

(1) Noise measured at 1 m distance with inlet and outlet ports piped, in accordance to ISO 3744.
(2) No cURus motor

- For proper use, the blower should be equipped with inlet filter and safety valve; other accessories available on request.
- Ambient temperaturefrom +5° to +104°F.
- Specifications subject to change without notice.

10.27 - G1-1 – GEORG FISCHER LINE STRAINER

GF Piping Systems

Betriebsanleitung

Schmutzfänger Typ 305/ 306

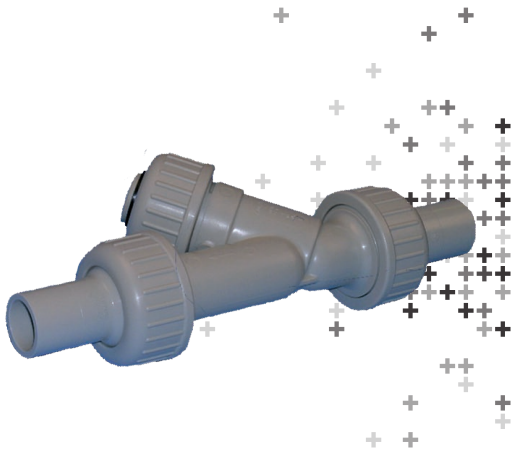

Die technischen Daten sind unverbindlich. Sie gelten nicht als zugesicherte Eigenschaften oder als Beschaffenheits- oder Haltbarkeitsgarantien. Änderungen vorbehalten. Es gelten unsere Allgemeinen Verkaufsbedingungen.

EG-Konformitätserklärung im Sinne der EG-Druckgeräte-richtlinie (EG-RL 97/23/EG)

Der Hersteller Georg Fischer Rohrleitungssysteme AG, 8201 Schaffhausen (Schweiz) erklärt, dass es sich bei den Schmutzfängern Typ 305/306 um Produkte im Sinne der Druckgeräterichtlinie 97/23/EG handelt.

Änderungen am Schmutzfänger Typ 305/306, die Auswirkungen auf die angegebenen technischen Daten und den bestimmungsgemässen Gebrauch haben, machen diese Konformitätserklärung ungültig.

Schaffhausen, den 01.08.2012

Dirk Petry
R&D Manager
Georg Fischer Piping Systems

Georg Fischer Piping Systems Ltd. CH-8201 Schaffhausen (Switzerland)
Phone +41(0)52 631 30 26 / info.ps@georgfischer.com / www.gfps.com

161.484.486 / GFDO 6300_1b_2b_4b_6b (08.12) © Georg Fischer Piping Systems Ltd.

Betriebsanleitung beachten

Die Betriebsanleitung ist Teil des Produkts und ein wichtiger Baustein im Sicherheitskonzept.
- Betriebsanleitung lesen und befolgen.
- Betriebsanleitung stets am Produkt verfügbar halten.
- Betriebsanleitung an alle nachfolgenden Verwender des Produkts weitergeben.

1. Bestimmungsgemässe Verwendung

Schmutzfänger Typ 305/306 sind ausschliesslich dazu bestimmt, nach Einbau in ein Rohrleitungssystem, innerhalb der zugelassenen Druck- und Temperaturgrenzen, Verschmutzungen aus Medien zu filtern. Die gesamte Armatur und alle ihre Komponenten sind dazu bestimmt, innerhalb ihrer chemischen Beständigkeit eingesetzt zu werden.

2. Zu diesem Dokument

2.1 Mitgeltende Dokumente

- Georg Fischer Planungsgrundlagen Industrie

Diese Unterlagen sind über die Vertretung von GF Piping Systems oder unter www.piping.georgfischer.com erhältlich.

2.2 Produktvarianten

- Typ 305 und Typ 306

2.3 Sicherheits- und Warnhinweise

In dieser Anleitung werden Warnhinweise verwendet, um Sie vor Verletzungen oder vor Sachschäden zu warnen. Lesen und beachten Sie diese Warnhinweise immer.

GEFAHR	• Unmittelbar drohende Gefahr! Bei Nichtbeachtung drohen Ihnen Tod oder schwerste Verletzungen
WARNUNG	• Möglicherweise drohende Gefahr! Bei Nichtbeachtung drohen Ihnen schwere Verletzungen
VORSICHT	• Gefährliche Situation! Bei Nichtbeachtung drohen leichte Verletzungen
ACHTUNG	• Gefährliche Situation! Bei Nichtbeachtung drohen Sachschäden

3. Sicherheit und Verantwortung

Um die Sicherheit im Betrieb zu gewährleisten, ist der Betreiber für folgende Maßnahmen verantwortlich:
- Produkt nur bestimmungsgemäss verwenden, siehe bestimmungsgemässe Verwendung.
- Kein beschädigtes oder defektes Produkt verwenden. Beschädigtes Produkt sofort aussortieren.
- Sicherstellen, dass Rohrleitungssystem fachgerecht verlegt ist und regelmässig überprüft wird.
- Produkt und Zubehör nur von Personen montieren lassen, die die erforderliche Ausbildung, Kenntnis oder Erfahrung haben.
- Personal regelmässig in allen zutreffenden Fragen der örtlich geltenden Vorschriften für Arbeitssicherheit, Umweltschutz vor allem für druckführende Rohrleitungen unterweisen.

Das Personal ist für folgende Maßnahmen verantwortlich:
- Betriebsanleitung und die darin enthaltenen Hinweise kennen, verstehen und beachten.

Für Schmutzfänger gelten dieselben Sicherheitsvorschriften wie für das Rohrleitungssystem, in das sie eingebaut werden.

4. Transport und Lagerung

- Produkt in ungeöffneter Originalverpackung transportieren und/oder lagern.
- Produkt vor Staub, Schmutz, Feuchtigkeit sowie Wärme- und UV-Strahlung schützen.
- Sicherstellen, dass Produkt weder durch mechanische noch durch thermische Einflüsse beschädigt ist.
- Produkt vor Montage auf Transportschäden untersuchen.

5. Aufbau

5.1 PVC-U

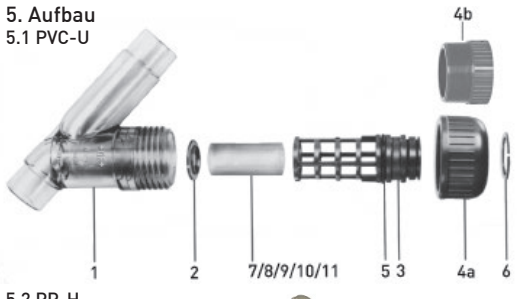

5.2 PP-H

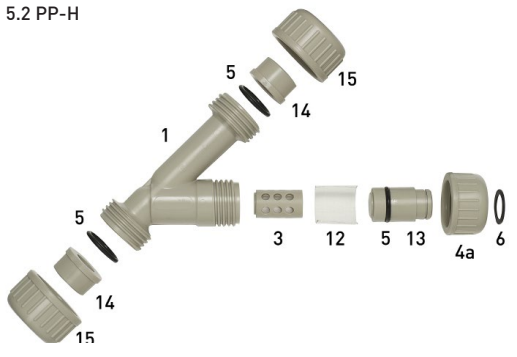

Pos.	Bezeichnung
1	Gehäuse
2	Abstützring
3	Siebkäfig
4a	Verschlussmutter
4b	Stopfen (nur für PVC-U, DN65 und DN80)
5	Gehäusedichtung
6	Sprengring
7	Siebrohr PVC-U (0,5 mm)
8	Siebrohr PVC-U (0,8 mm)
9	Siebrohr PVC-U (1,4 mm)
10	Siebrohr PVC-U (2,2 mm)
11	Siebrohr Edelstahl (0,5 mm)
12	Siebrohr PP-H
13	Siebkäfighalter
14	Anschlussteil PP-H
15	Anschlussmutter PP-H

6. Montage

- Gehäusedichtung **5** auf Siebkäfig **3** bzw. auf Siebkäfighalter **13** aufziehen.
- Gewünschtes Siebrohr **7/8/9/10/11/12** in Siebkäfig **3** schieben.

bei PP-H:
- Siebkäfig **3** und Siebkäfighalter **13** zusammenführen.

bei PVC-U:
- Abstützring **2** in Gehäuse **1** legen.
- Siebkäfig **3** in Gehäuse **1** einführen.

bei PVC-U, DN15 bis DN50 und PPH:
- Verschlussmutter **4a** auf Gehäuse **1** schrauben und mit Sprengring **6** sichern.

bei PVC-U, DN65 und DN80:
- Stopfen **4b** auf Gehäuse **1** befestigen.

HINWEIS
Bei Demontage des Schmutzfängers wird aus Sicherheitsgründen empfohlen, die Gehäusedichtungen auszutauschen.

7. Wartung

WARNUNG
Verletzungsgefahr durch unkontrolliertes Ausweichen des Mediums!
Wurde der Druck nicht vollständig abgebaut, kann das Medium unkontrolliert entweichen. Je nach Art des Mediums besteht Verletzungsgefahr.
- Vor dem Lösen der Verschlussmutter: Druck in der Rohrleitung vor dem Ausbau vollständig abbauen.
- Bei gesundheitsschädlichen, brennbaren oder explosiven Medien Rohrleitung vor dem Ausbau vollständig entleeren und spülen. Dabei mögliche Rückstände beachten.
- Ein sicheres Auffangen des Mediums durch entsprechende Massnahmen gewährleisten.

7.1 Siebrohr reinigen/austauschen

- Verschlussmutter **4a** öffnen bzw. Stopfen **4b** abziehen.
- Siebkäfig **3** aus Gehäuse **1** nehmen.
- Siebrohr **7/8/9/10/11/12** aus Siebkäfig **3** entnehmen.
- Siebrohr **7/8/9/10/11/12** reinigen oder ggf. durch neues Siebrohr ersetzen.
- Schmutzfänger montieren.

7.2 Gehäusedichtung austauschen

bei PVC-U, DN15 bis DN50:
- Sprengring **6** lösen und Verschlussmutter **4a** öffnen.

bei PVC-U, DN65 und DN80:
- Stopfen **4b** vom Gehäuse **1** abziehen.

bei PP-H:
- Sprengring **6** lösen und Verschlussmutter **4a** öffnen.
- Anschlussmutter **15** lösen.

- Gehäusedichtung **5** entnehmen und durch eine neue Gehäusedichtung ersetzen.
- Sicherstellen, dass Gehäusedichtung **5** korrekt sitzt und dass Dichtung und Dichtfläche frei von Verschmutzungen sind.
- Schmutzfänger montieren.

bei PVC-U, DN15 bis DN50 und PPH:
- Sicherstellen, dass Sprengring **6** gesichert ist.

8. Entsorgung

- Vor Entsorgung die einzelnen Materialien nach recycelbaren Stoffen, Normalabfall und Sonderabfall trennen.
- Bei Entsorgung oder Recycling des Produkts, der einzelnen Komponenten und der Verpackung die örtlichen gesetzlichen Bestimmungen und Verordnungen einhalten.
- Länderspezifische Vorschriften, Normen und Richtlinien beachten.

Bei Fragen bezüglich der Entsorgung des Produkts wenden Sie sich an Ihre nationale Vertretung von GF Piping Systems.

GF Piping Systems

Instruction Manual

Line strainer Type 305/ 306

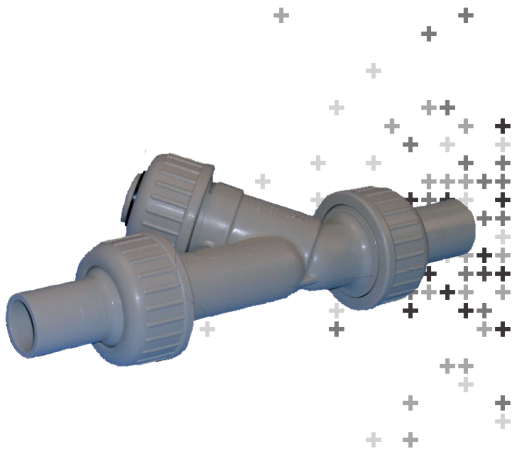

The technical data are not binding. They neither constitute expressly warranted characteristics nor guaranteed properties nor a guaranteed durability. They are subject to modification. Our General Terms of Sale apply.

Declaration of conformity (CE) within the meaning of the EG directive 97/23/EG pressure device regulation

The manufacturer Georg Fischer Rohrleitungssysteme AG, 8201 Schaffhausen (Switzerland) declares that the line strainers type 305/306 are products as defined by the Pressure Equipment Directive 97/23/EC.

Changes to the line strainer that could effect the stated technical data and the intended purpose, void this manufacturer's declaration

Schaffhausen, den 01.08.2012

Dirk Petry
R&D Manager
Georg Fischer Piping Systems

Georg Fischer Piping Systems Ltd. CH-8201 Schaffhausen (Switzerland)
Phone +41(0)52 631 30 26 / info.ps@georgfischer.com / www.gfps.com

161.484.486 / GFDO 6300_1b_2b_4b_6b (08.12) © Georg Fischer Piping Systems Ltd.

Observe instruction manual

The instruction manual is part of the product and an important element within the safety concept.
- Read and observe instruction manual.
- Always keep instruction manual available close to the product.
- Pass on instruction manual to all subsequent users of the product.

1. Intended use

Line strainers type 305/306 are solely designed to filter the dirt out of the media after they have been installed into a pipework system. The line strainer type 305/306 is meant to be used within the entire valve's chemical resistance and all of its components and the approved pressure range.

2. Regarding this document

2.1 Related documents

- Georg Fischer planning fundamentals industry

These documents can be obtained from the GF Piping Systems representation or under www.piping.georgfischer.com.

2.2 Product types

- Type 305 and type 306

2.3 Sicherheits- und Warnhinweise

This manual contains warning instructions that shall warn against injuries or material losses. Always read and observe those warning instructions.

DANGER	• Imminent danger! Non-observance may result in major injuries or death
WARNING	• Possible danger! Non-observance may result in major injuries
CAUTION	• Dangerous situation! Non-observance may result in minor injuries
NOTICE	• Dangerous situation! Non-observance may result in material losses

3. Safety and responsibility

In order to provide safety in the plant, the operator is responsible for the following measures:
- Products may only be used for its intended purpose, see intended purpose.
- Never use a damaged or defective product. Immediately sort out damaged product.
- Make sure that the piping system has been installed professionally and serviced regularly.
- Products and equipment shall only be installed by persons who have the required training, knowledge or experience.
- Regularly train personnel in all relevant questions regarding locally applicable regulations regarding safety at work, environmental protection especially for pressurised pipes.

The personnel is responsible for the following measures:
- Know, understand and observe the instruction manual and the advices therein.

The safety instructions for the line strainer are the same as for the piping system they are installed in.

4. Transport and storage

- Transport and/or store product in unopened original packaging.
- Protect product from dust, dirt, dampness as well as thermal and UV radiation.
- Make sure that the product has not been damaged neither by mechanical nor thermal influences.
- Check product for transport damages prior to the installation.

5. Design

5.1 PVC-U

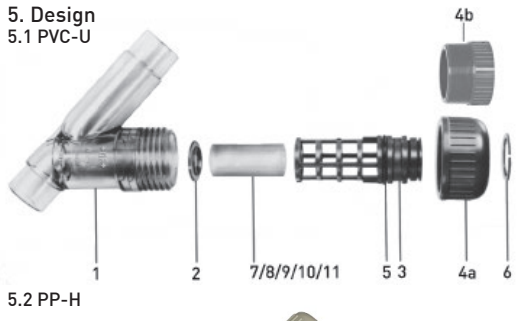

5.2 PP-H

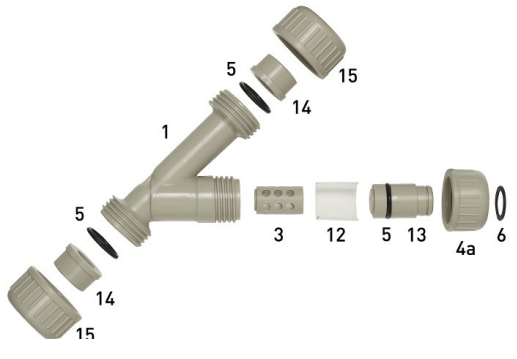

Item	Description
1	Body
2	Screen support ring
3	Screen cage
4a	Valve nut
4b	Tamping (only for PVC-U, DN65 and DN80)
5	Body seal
6	Circlip
7	Slotted casing PVC-U (0,5 mm)
8	Slotted casing PVC-U (0,8 mm)
9	Slotted casing PVC-U (1,4 mm)
10	Slotted casing PVC-U (2,2 mm)
11	Slotted casing stainless steel (0,5 mm)
12	Slotted casing PPH
13	Screen cage bracket
14	Valve end metric PP-H
15	Nut PP-H

6. Assembly

- Fit body seal **5** onto the screen cage **3** or onto the screen cage bracket **13**.
- Push designated slotted casing **7/8/9/10/11/12** into screen cage **3**.

Line strainer PP-H:
- Putting screen cage **3** and screen cage bracket **13** together.

Line strainer PVC-U:
- Place screen support ring **2** in body **1**.
- Insert screen cage **3** into body **1**.

Line strainer PVC-U, DN15 to DN50 and PPH:
- Screw valve nut **4a** onto the body **1** and secure it with a circlip **6**.

Line strainer PVC-U-U, DN65 und DN80:
- Secure tamping **4b** onto the body **1**.

NOTE
When removing the line strainer, it is recommended for safety reasons to replace the body seals.

7. Maintenance

WARNING
Risk of injury due to uncontrolled evasion of the medium!
If the pressure was not relieved completely, the medium can evade uncontrolled. Depending on the type of medium, risk of injury may exist
- Completely relieve pressure in the pipes prior to dismounting.
- Completely empty and rinse pipe prior to dismounting in connection with harmful, flammable, or explosive media. Pay attention to potential residues.
- Provide for safe collection of the medium by implementing appropriate actions.

7.1 Maintain/change screen

- Open the valve nut **4a** öffnen or remove the tamping **4b**.
- Remove screen cage **3** from body **1**.
- Remove slotted casing **7/8/9/10/11/12** from screen cage **3**.
- Clean the slotted casing **7/8/9/10/11/12** or, if necessary, replace with a new one.
- Assemble the line strainer.

7.2 Change body seal austauschen

PVC-U, DN15 to DN50:
- Loosen circlip **6** and open valve nut **4a**.

PVC-U, DN65 and DN80:
- Remove tamping **4b** from the body **1**.

PP-H:
- Loosen circlip **6** and open valve nut **4a**.
- Loosen nut **15**.

- Remove body seal **5** and replace with a new one..
- Make sure that the body seal **5** is placed correctly and that the body seal and the surrounding area are dirt-free.
- Assemble the line strainer.

PVC-U, DN15 to DN50 and PPH:
- Make sure that the circlip **6** is secured.

8. Disposal

- Before disposing of the different material, separate it by recyclables, normal waste and special waste.
- Comply with local legal regulations and provisions when recycling or disposing of the product, the individual components and the packaging.
- Comply with National regulations, standards and directives.

If you have questions regarding the disposal of your product, please contact your national GF Piping Systems representative.

GF Piping Systems

Mode d'emploi

Filtre à tamis Type 305/ 306

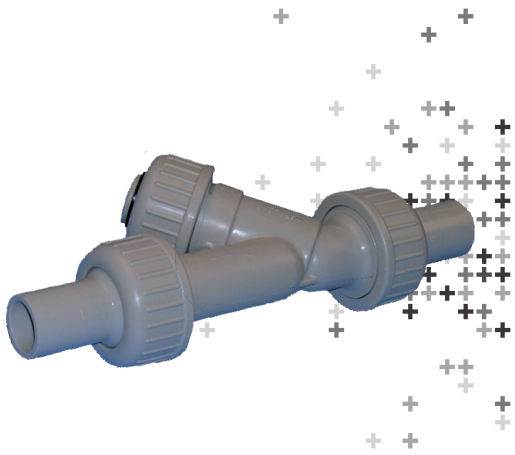

Les données techniques sont fournies à titre indicatif. Elles ne sont pas des garanties et ne constituent pas non plus un gage de propriété intrinsèque ou de durabilité. Sous réserve de modifications. Nos conditions générales de vente s'appliquent.

Déclaration de conformité CE au sens de la directive 97/23/ CE (Directive Européenne des Equipements sous Pression)

Le fabricant Georg Fischer Rohrleitungssysteme AG, 8201 Schaffhouse (Suisse), déclare que les filtres à tamis de type 305/306 sont conformes à la directive européenne 97/23/CE sur les équipements sous pression..

Les modifications réalisées sur le filte à tamis, qui ont une influence sur les données techniques fournies et l'usage prévu, invalident la présente déclaration du fabricant.

Schaffhausen, den 01.08.2012

Dirk Petry
R&D Manager
Georg Fischer Piping Systems

Georg Fischer Piping Systems Ltd. CH-8201 Schaffhausen (Switzerland)
Phone +41(0)52 631 30 26 / info.ps@georgfischer.com / www.gfps.com

161.484.486 / GFDO 6300_1b_2b_4b_6b (08.12) © Georg Fischer Piping Systems Ltd.

Se reporter au mode d'emploi

Le mode d'emploi fait partie intégrante du produit et constitue un élément essentiel du concept de sécurité.
- Lire et respecter le mode d'emploi.
- Le mode d'emploi doit toujours être à proximité du produit.
- Transmettre le mode d'emploi à tous les utilisateurs successifs du produit.

1. Utilisation conforme

Les filtes à tamis de type 305/306 sont exclusivement destinés, après avoir été montés dans un système de tuyauterie, à filtrer les impuretés contenues dans les fluides. Les filtres à tamis sont conçus pour être utilisés dans la limite de la résistance de l'ensemble de la vanne aux produits chimiques ainsi que de tous les composants, et dans les plages de pression admissibles.

2. À propos de ce document

2.1 Documents applicables
- Principes de planification pour l'industrie Georg Fischer

Ces documents sont disponibles auprès d'un représentant de GF Piping Systems ou sur www.piping.georgfischer.com.

2.2 Variantes de produits
- Type 305 et type 306

2.3 Consignes de sécurité et avertissements

Des avertissements sont utilisés dans ce mode d'emploi afin d'avertir du risque de blessures ou de dégâts matériels. Toujours lire et respecter ces avertissements.

DANGER	• Menace de danger imminente! En cas de non-respect, vous risquez la mort ou de graves blessures
AVERTISSEMENT	• Menace de danger potentielle! En cas de non-respect, vous risquez de graves blessures
ATTENTION	• Situation dangereuse ! En cas de non-respect, vous risquez de légères blessures
ATTENTION	• Situation dangereuse ! En cas de non-respect, il existe un risque de dégâts matériels

3. Sécurité et responsabilité

Afin de garantir la sécurité du fonctionnement, l'exploitant est responsable de la mise en oeuvre des mesures suivantes:
- Utiliser le produit conformément aux dispositions uniquement, voir Utilisation conforme
- Ne pas utiliser un produit s'il est endommagé ou défectueux. Isoler immédiatement tout produit endommagé.
- S'assurer que le système de tuyauterie est posé correctement et qu'il est contrôlé régulièrement.
- Les produits et accessoires doivent uniquement être montés par des personnes qui disposent de la formation, des connaissances ou de l'expérience nécessaires.
- Informer régulièrement le personnel de toutes les questions relatives aux dispositions locales applicables en matière de sécurité du travail et de protection de l'environnement, notamment pour les canalisations sous pression.

Le personnel est responsable de la mise en oeuvre des mesures suivantes:
- Lire, comprendre et respecter le mode d'emploi ainsi que les remarques qu'il contient.

Les mêmes dispositions de sécurité s'appliquent aux filtres à tamis qu'au système de tuyauterie dans lequel ils sont intégrés.

4. Transport et stockage

- Transporter et/ou stocker le produit dans son emballage d'origine non ouvert.
- Protéger le produit de la poussière, de la saleté, de l'humidité ainsi que des rayonnements UV et solaires.
- S'assurer que le produit n'est pas détérioré par des influences thermiques ou mécaniques.
- Contrôler le produit avant le montage afin de détecter d'éventuels dégâts de transport.

5. Structure

5.1 PVC-U

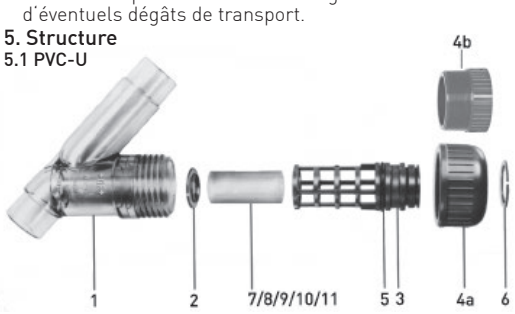

5.2 PP-H

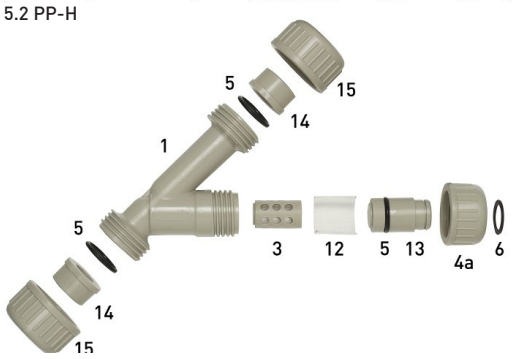

Pos.	Désignation
1	Corps
2	Bague d'appui
3	Cage de filtre
4a	Écrou
4b	Bouchon (seulement pour PVC-U, DN65 et DN80)
5	Joint du corp
6	Circlip
7	Tamis PVC-U (0,5 mm)
8	Tamis PVC-U (0,8 mm)
9	Tamis PVC-U (1,4 mm)
10	Tamis PVC-U (2,2 mm)
11	Tamis acier inoxydable (0,5 mm)
12	Tamis PP-H
13	Support de cage
14	Pièce folle PP-H
15	Ecrou raccord PP-H

6. Montage

- Glisser le joint du corp **5** sur le cage de filtre **3** ou sur le support de cage **13**.
- Introduire le tamis souhaité **7/8/9/10/11/12** dans le cage de filtre **3**.

Filtre à tamis PP-H:
- Abouter le cage de filtre **3** et le support de cage **13**.

Filtre à tamis PVC-U:
- Placer la bague d'appui **2** dans le corps **1**.
- Insérer le cage de filtre **3** dans le corps **1**.

Filtre à tamis PPH et PVC-U, DN15 à DN50:
- Visser l'écrou **4a** sur le corps **1** et, sur les modèles DN15 à DN50, le sécuriser à l'aide d'un circlip **6**.

Filtre à tamis PVC-U, DN65 et DN80:
- Sécuriser bouchon **4b** sur le coprs **1**.

AVIS
En cas de démontage du collecteur d'impuretés, nous recommandons pour des raisons de sécurité, le remplacement des joints du corp.

7. Entretien

AVERTISSEMENT
Risque de blessure par échappement incontrôlé de l'agent!
Si la pression n'a pas été annulée complètement, l'agent peut s'échapper de manière incontrôlée.
Un risque de blessure existe selon la nature de l'agent.
- Annuler complètement la pression dans la tuyauterie avant le démontage.
- Vidanger et rincer la tuyauterie complètement avant le démontage en cas de présence d'agents nocifs pour la santé, combustibles ou explosifs. Tenir compte, ce faisant, des résidus éventuels.
- Une collecte sûre de l'agent par des mesures correspondantes doit être garantie.

7.1 Affiner/changer le tamis désiré
- Ouvrir l'écrou **4a** ou retirer le bouchon **4b**.
- Extraire le cage de filtre **3** du le corps **1**.
- Retirer le tamis **7/8/9/10/11/12** du cage du filtre.
- Nettoyer le tamis **7/8/9/10/11/12** ou le remplacer le cas échéant.
- Monter le filtre à tamis.

7.2 Changer le joint du corps

Filtre à tamis PVC-U, DN15 à DN50:
- Retirer le circlip **6** et ouvrir l'écrou **4a**.

Filtre à tamis PVC-U, DN65 et DN80:
- Retrirer le bouchon **4b**.

Filtre à tamis PP-H:
- Retirer le circlip **6** et ouvrir l'écrou **4a**.
- Retirer l'ecrou raccord **15**.

- Retirer le joint du corps **5** et le remplacer par un joint neuf.
- S'assurer que le joint du corps est bien en place et que le joint et la surface d'étanchéité sont exempts d'impuretés.
- Monter le filtre à tamis.

Filtre à tamis PPH et PVC-U, DN15 à DN50:
- S'assurer que le circlip **6** est bloqué.

8. Élimination des déchets

- Avant la mise au rebut, trier les différents matériaux et séparer les matériaux recyclables, les déchets normaux et les déchets spéciaux.
- En cas de mise au rebut ou de recyclage du produit, des composants individuels et de l'emballage, respecter les dispositions légales et décrets en vigueur.
- Respecter les prescriptions, normes et directives nationales spécifiques.

En cas de questions relatives à la mise au rebut du produit, adressez-vous à la représentation nationale de GF Piping Systems.

GF Piping Systems

Manual de instrucciones

Colador Tipo 305/ 306

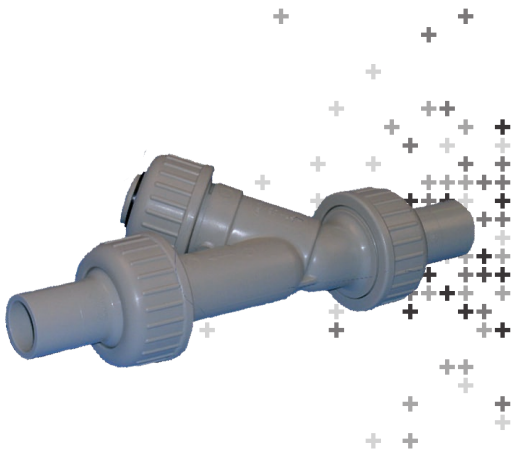

Los datos técnicos son sin compromiso. Estos no contienen ninguna promesa de propiedades. Salvo modificaciones. Son válidas nuestras Condiciones Generales de Venta.

Declaratíon de conformidad CE en el sentido de la Directiva Equipos de presión (97/23/CE)

El fabricante Georg Fischer Rohrleitungssysteme AG, 8201 Schaffhausen (Suiza) declara que los coladors del tipo 305/306 son productos conformes a la directiva sobre equipos a presión 97/23/CE.

Toda modificación del colador que afecte a los datos técnicos indicados y al uso conforme a su destino invalidará esta declaración del fabricante.

Schaffhausen, den 01.08.2012

Dirk Petry
R&D Manager
Georg Fischer Piping Systems

Georg Fischer Piping Systems Ltd. CH-8201 Schaffhausen (Switzerland)
Phone +41(0)52 631 30 26 / info.ps@georgfischer.com / www.gfps.com

161.484.486 / GFDO 6300_1b_2b_4b_6b (08.12) © Georg Fischer Piping Systems Ltd.

Obsérvese el manual de instrucciones

El manual de instrucciones forma parte del producto y es un elemento importante del concepto de seguridad.
- Lea y tenga en cuenta el manual de instrucciones.
- Guarde el manual de instrucciones junto con el producto de manera que esté siempre disponible.
- Entregue el manual de instrucciones en caso de transmitir el producto a otros usuarios.

1. Uso conforme a su destino

Los coladors del tipo 305/306 han sido diseñados exclusivamente para filtrar suciedad de los medios tras ser montados en sistemas de tuberías. Los coladors están destinados al uso dentro de las resistencias químicas de la válvula completa y todos sus componentes y de los márgenes de presión admisibles.

2. Acerca de este documento

2.1 Documentación complementaria
- Fundamentos para la planificación industrial de Georg Fischer

Estos documentos están disponibles en su filial de GF Piping Systems o en www.piping.georgfischer.com

2.2 Variantes
- Tipo 305 y tipo 306

2.3 Advertencias e instrucciones de seguridad

En este manual se utilizan advertencias para avisarle de posibles lesiones o daños materiales. Lea y tenga en cuenta siempre estas advertencias.

PELIGRO	• ¡Peligro inminente! Peligro de muerte o de sufrir lesiones muy graves en caso de inobservancia
ADVERTENCIA	• ¡Posible peligro! Peligro de sufrir lesiones graves en caso de inobservancia
PRECAUCIÓN	• ¡Situación peligrosa! Peligro de sufrir lesiones leves en caso de inobservancia
ATENCIÓN	• ¡Situación peligrosa! Peligro de que se produzcan daños materiales en caso de inobservancia

3. Seguridad y responsabilidad

Para garantizar la seguridad durante el funcionamiento, el usuario es responsable de aplicar las siguientes medidas:
- Utilizar el producto exclusivamente de forma conforme a su destino.
- No utilizar ningún producto dañado o averiado. Separar de inmediato el producto dañado.
- Asegurarse de que el sistema de tuberías se instala por un profesional y se inspecciona con regularidad.
- Encomendar el montaje del producto y los accesorios únicamente a personas con la formación, los conocimientos o la experiencia necesarios.
- Informar con regularidad al personal sobre todas las cuestiones relacionadas con la normativa local vigente de seguridad laboral y protección medioambiental, especialmente en lo relativo a tuberías a presión.

El personal es responsable de aplicar las siguientes medidas:
- Conocer, comprender y tener en cuenta el manual de instrucciones y las advertencias contenidas en él.

Al colador se aplican las mismas normas de seguridad que rigen para el sistema de tuberías en el que está instalado.

4. Transporte y almacenamiento

- Transporte y almacene el producto en el embalaje original cerrado.
- Proteja el producto del polvo, la suciedad, la humedad y la radiación térmica y ultravioleta.
- Asegúrese de que el producto no haya sufrido daños a consecuencia de influencias mecánicas o térmicas.
- Compruebe que el producto no ha sufrido daños durante el transporte antes de montarlo.

5. Componentes

5.1 PVC-U

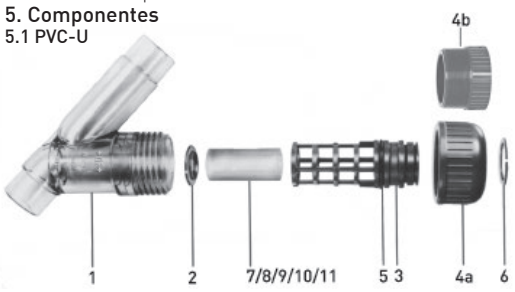

5.2 PP-H

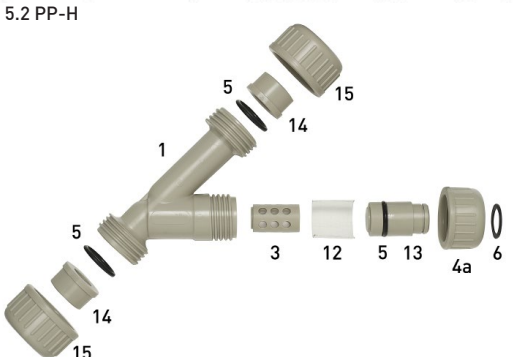

Pos.	Denominación
1	Cuerpo
2	Anillo soporte
3	Cesta filtro
4a	Tuerca ciega
4b	Enchufe (disponible sólo para für PVC-U, DN65 y DN80)
5	Junta del cuerpo
6	Anillo de sujeción
7	Tamiz PVC-U (0,5 mm)
8	Tamiz PVC-U (0,8 mm)
9	Tamiz PVC-U (1,4 mm)
10	Tamiz PVC-U (2,2 mm)
11	Tamiz acero inoxidable (0,5 mm)
12	Tamiz PP-H
13	Soporte de tamiz
14	Extremo PP-H
15	Tuerca de connexión PP-H

6. Montaje

- Extraer la junta del cuerpo **5** de la cesta filtro **3** o del soporte de tamiz **13**.
- Introducir el tamiz deseado **7/8/9/10/11/12** en la cesta filtro **3**.

Colador PP-H:
- Montar la cesta filtro **3** y el soporte de tamiz **13**.

Colador PVC-U:
- Colocar el anillo soporte **2** en la carcasa **1**.
- Introducir la cesta filtro **3** en la carcasa **1**.

Colador PVC-U, DN15 a DN50 y PPH:
- Atornillar la tuerca ciega **4a** en la carcasa **1** y en DN15 a DN50 asegurarla con un anillo de sujeción **6**.

Colador PVC-U, DN65 y DN80:
- Fijar tuerca ciega **4b** en la carcasa **1**.

AVISO
Por motivos de seguridad, al desmontar el colador es recomendable cambiar las juntas.

7. Mantenimiento

ADVERTENCIA
Peligro de lesiones por desviación incontrolada del medio!
Si no se reduce la presión completamente el medio puede salir de forma incontrolada. Según el tipo de medio puede existir peligro de lesiones.
- Disminuir la presión en la tubería antes de desmontar completamente.
- En caso de medios perjudiciales para la salud, inflamables o explosivos vaciar y lavar la tubería antes de desmontar. Además prestar atención a posibles restos.
- Garantizar una absorción segura del medio mediante medidas correspondientes.

7.1 Limpiar/sustituir el tamiz
- Abrir la tuerca ciega **4a** öffnen o despegar el enchufe **4b**.
- Extraer la cesta filtro **3** de la carcasa **1**.
- Extraer el tamiz **7/8/9/10/11/12** de la cesta filtro **3**.
- Limpiar el tamiz **7/8/9/10/11/12** o sustituirlo por uno nuevo si es necesario.
- Montaje del colador.

7.2 Sustituir la junta del cuerpo

Colador PVC-U, DN15 a DN50:
- Aflojar el anillo de sujeción **6.**
- Abrir la tuerca ciega **4a**.

Colador PVC-U, DN65 y DN80:
- Despegar el enchufe **4b** de la carcasa **1**.

Colador PP-H:
- Aflojar el anillo de sujeción **6**.
- Abrir la tuerca ciega **4a**.
- Aflojar la tuerca de connexión **15**.

- Extraer la junta del cuerpo **5** y sustituirla por una nueva.
- Cerciorarse de que la junta del cuerpo **5** está asentada correctamente y de que la junta y la superficie de obturación no presentan suciedad.
- Montaje del colador.

Colador PVC-U, DN15 a DN50 y PPH:
- Cerciorarse de que el anillo de sujeción **6** está asegurado.

8. Eliminación

- Antes de eliminar los materiales individuales estos deben separarse en residuos reciclables, residuos normales y residuos especiales.
- Al eliminar o reciclar el producto, los componentes individuales y el embalaje deben observarse las normas locales y disposiciones legales vigentes.
- Observar los reglamentos, normas y directrices específicos del país.

Si tiene dudas respecto a la eliminación del producto, diríjase a su representación nacional de GF Piping Systems.

10.28 - G1-2 – GEORG FISCHER BALL VALVE

0 Allgemeine Hinweise

0.1 Warnhinweise

In dieser Anleitung werden Warnhinweise verwendet, um Sie vor Verletzungen oder vor Sachschäden zu warnen. Lesen und beachten Sie diese Warnhinweise immer!

Warnsymbol	Bedeutung
Gefahr	Unmittelbar drohende Gefahr! Bei Nichtbeachtung drohen Ihnen Tod oder schwerste Verletzungen.
Warnung	Möglicherweise drohende Gefahr! Bei Nichtbeachtung drohen Ihnen schwere Verletzungen.
Vorsicht	Gefährliche Situation! Bei Nichtbeachtung drohen Verletzungen oder Sachschäden.

0.2 Abkürzungen

Typ 546	Kugelhahn Typ 546
MF Hebel	Abschliessbarer Multifunktionshebel
PN	Nenndrücke

0.3 Die im Text erwähnten Planungsgrundlagen erhalten Sie bei Ihrer zuständigen Verkaufsgesellschaft sowie im Internet unter www.piping.georgfischer.com/ce

0 Indications générales

0.1 Indications d'avertissement

Les présentes instructions comprennent des indications d'avertissement, qui vous mettent en garde contre les risques de blessures et de dégâts matériels. Lisez et conformez-vous toujours à ces indications d'avertissement!

Symboles d'avertissement	Signification
Danger	Danger imminent! Le non-respect vous expose à la mort ou à des blessures graves.
Avertissement	Danger éventuel! Le non-respect vous expose à des blessures graves.
Attention	Situation dangereuse! En cas de non-respect, danger de blessures ou de dégâts matériels.

0.2 Abréviations

Type 546	Robinet à bille type 546
Levier MF	Levier multifonction verrouillable
PN	Pressions nominales

0.3 Les documents d'études et de planification mentionnés dans le texte sont disponibles auprès de votre distributeur ainsi que sur le site Internet www.piping.georgfischer.com/ce.

Montage- und Betriebsanleitung
Instruction de montage et de service
Installation and Operating Instructions
Istruzioni per il montaggio e l'uso

2-Weg Kugelhahn Typ 546, handbetätigt
Robinet à bille à 2 voies type 546, à commande manuelle
2-Way Ball Valve Type 546, manual
Valvola a sfera a 2 vie tipo 546, azionamento manuale

GEORG FISCHER +GF+
Piping Systems

0 General Information

0.1 Warning notice

Warning notices are used in this manual to inform you of possible injuries or damage to property. Please read them and always abide by these warnings!

Symbol	Meaning
Danger	Imminent acute danger! Failure to comply could result in death or extremely serious injury.
Warning	Possible acute danger! Failure to comply could result in serious injury.
Caution	Dangerous situation! Failure to comply can lead to injury or damage to property.

0.2 Abbreviations

Type 546	Ball Valve Type 546
MF lever	Lockable multi-functional lever
PN	Nominal pressure

0.3 The Planning Fundamentals mentioned in this text may be obtained from your sales representative or on the internet at www.piping.georgfischer.com/ce

0 Indicazioni Generali

0.1 Avvisi di pericolo

In queste istruzioni si utilizzano avvisi di pericolo per mettervi in guardia di fronte al rischio di lesioni personali o danni materiali. Per cortesia leggete ed osservate sempre questi avvisi di pericolo!

Avviso di pericolo	Significato
Pericolo	Pericolo imminente! Nel caso di inosservanza rischio di morte o lesioni gravi.
Attenzione	Pericolo probabile! Nel caso di inosservanza rischio di lesioni gravi.
Cautela	Situazione pericolosa! Nel caso di inosservanza rischio di lesioni o danni materiali.

0.2 Abbreviazioni

Tipo 546	Valvola a sfera tipo 546
Leva MF	Leva multifunzionale chiudibile
PN	Pressioni nominali

0.3 Troverete i fondamenti per la progettazione menzionati nel testo presso la vostra società di vendita competente o al sito Internet www.piping.georgfischer.com/ce

(BR) Para obter estas instruções noutras línguas, dirija-se, por favor, à sua sociedade de vendas.
(VRC) 有关其它语种的本说明书的情况，请向您的销售公司了解。
(DK) (IS) Hvis du ønsker vejledningen på andre sprog, skal du henvende dig til din forhandler.
(E) Para obtener estas instrucciones en otros idiomas, diríjase a su distribuidor.
(GR) Για λοιπές γλώσσες στις οποίες διατίθενται οι οδηγίες αυτές, παρακαλούμε απευθυνθείτε στην εταιρεία πωλήσεων.
(ID) Untuk bahasa-bahasa lain petunjuk ini, anda dimohon untuk menghubungi perusahaan penjual.
(IND) इस निर्देश पुस्तिका की ओर भाषाऐं के लिऐ आप अपने विक्रेता से सम्पर्क करें ।
(J) その他の言語のこのマニュアルは, 最寄りの販売店までお問い合わせ下さい。
(N) Ta kontakt med salgsselskapet for å få denne veiledningen på ytterligere språk.
(NL) Voor andere taalversies van deze handleiding kunt u contact opnemen met uw verkoopfirma.
(PL) O inne jezyki niniejszej instrukcji prosze pytac w miejscu sprzedazy.
(RO) Cu privire la manualul acesta în alte limbi adresați-vă vânzătorului dvs.
(RUS) За Инструкцией на других языках обращайтесь, пожалуйста, к Вашему продавцу.
(S) Vänd dig till din återförsäljare för ytterligare språkversioner av denna anvisning.
(SGP) Keterangan dalam bahasa lain, tanyakan pada agen penjualan.

Herstellererklärung CE

Der Hersteller **Georg Fischer Rohrleitungssysteme AG, 8201 Schaffhausen (Schweiz)** erklärt, dass die **Kugelhähne des Typs 546** gemäss der harmonisierten Bauart-Norm prEN ISO 16135:2001

1. druckhaltende Ausrüstungsteile im Sinne der EG-Druckgeräterichtlinie 97/23 EG sind und solchen Anforderungen dieser Richtlinie entsprechen, die für Armaturen zutreffen,

2. den für Armaturen zutreffenden Anforderungen der Bauprodukte-Richtlinie 89/106/EG entsprechen.

Das CE-Zeichen an der Armatur zeigt diese Übereinstimmung an (nach der Druckgeräterichtlinie dürfen nur Armaturen grösser DN 25 mit CE gekennzeichnet werden).

Die Inbetriebnahme dieser Kugelhähne ist so lange untersagt, bis die Konformität der Gesamtanlage, in die die Kugelhähne eingebaut sind, mit einer der genannten EG-Richtlinien erklärt ist.

Änderungen am Kugelhahn, die Auswirkungen auf die angegebenen technischen Daten und den bestimmungsgemässen Gebrauch haben, machen diese Herstellererklärung ungültig. Zusätzliche Informationen können den «Georg Fischer Planungsgrundlagen» entnommen werden (siehe Allgemeine Hinweise Abschnitt 0.3).

Schaffhausen, den 16.10.2002

Hartmut Behlau
Geschäftsführer
Industriesysteme

Manfred Leyrer
Qualitätsmanagement-
Beauftragter

Déclaration du fabricant CE

Le fabricant **Georg Fischer Systèmes de Tuyauteries SA, 8201 Schaffhouse (Suisse)** déclare que selon la norme d'harmonisation technique prEN ISO 16135:2001, ses **robinets à bille type 546**

1. sont des pièces soumises à la pression en vertu de la Directive 97/23 CE (Equipements sous pression). Elles satisfont d'une part aux exigences de cette directive applicable à la robinetterie,
2. et d'autre part aux exigences de la Directive 89/106/CE (Produits de construction).

Le symbole CE indique cette conformité (selon la directive sur les équipements sous pression, seules les robinetteries plus grandes que DN 25 peuvent porter le symbole CE).

La mise en service des robinets à bille est interdite tant que l'installation concernée ne répond pas aux critères de conformité stipulés dans l'une des directives européennes précitées.

Les modifications effectuées sur le robinet à bille qui ont des répercussions sur les caractéristiques techniques et l'utilisation conforme entraînent la nullité de la déclaration du fabricant. Pour de plus amples informations, veuillez consulter les «bases de planification Georg Fischer» (cf. mode d'emploi, point 0.3).

Schaffhouse, le 16.10.2002

Hartmut Behlau
Directeur
des systèmes pour l'industrie

Manfred Leyrer
Mandataire pour le
management de la qualité

Manufacturer's Declaration CE

The manufacturer, **Georg Fischer Piping Systems Ltd, 8201 Schaffhausen (Switzerland),** declares, in accordance with the harmonized prEN ISO 16135:2001 standard, that the **ball valves type 546**

1. are pressure-bearing components in the sense of the EC Directive 97/23 EC concerning pressure equipment and that they meet the requirements pertaining to valves as stated in this directive,
2. correspond to the respective requirements for valves pursuant to Directive 89/106/EC concerning building products.

The CE emblem on the valve refers to this accordance (as per the directive on pressure equipment, only valves larger than DN 25 may be marked with CE).

Operation of these ball valves is prohibited until conformity of the entire system into which the ball valves have been installed is established according to one of the above mentioned EC directives.

Modifications on the ball valve which have an effect on the given technical specifications and the intended use render this manufacturer's declaration null and void. Additional information is contained in the «Georg Fischer Planning Fundamentals» (see Paragraph 0.3 under General Information).

Schaffhausen, 16.10.2002

Hartmut Behlau
Managing Director
Industrial Systems

Manfred Leyrer
Quality Management

Dichiarazione del fabbricante CE

Il fabbricante **Georg Fischer Sistemi per Tubazioni SA, 8201 Sciaffusa (Svizzera),** dichiara che **le valvole a sfera tipo 546,** in ottemperanza alla norma armonizzata sulla tipologia costruttiva prEN ISO 16135:2001

1. sono componenti di attrezzature sottoposti a pressione ai sensi della direttiva comunitaria sugli apparecchi a pressione 97/23 CEE e possiedono i requisiti previsti da tale direttiva specificamente per le valvole,
2. possiedono i requisiti previsti per le valvole a sfera dalla direttiva comunitaria sui prodotti da costruzione 89/106/CEE.

Il simbolo CE sulle valvole a sfera indica questa conformità (secondo la direttiva comunitaria sugli apparecchi a pressione possono essere contrassegnate con CE solo le valvole a sfera con dimensioni superiori a DN 25).

Non è possibile eseguire la messa in funzione di queste valvole, finché non viene attestata la conformità dell'impianto nel quale le valvole a sfera sono installate con una delle direttive comunitarie menzionate.

Eventuali modifiche eseguite sulla valvola a sfera ed eventuali alterazioni dei dati tecnici indicati e dei limiti d'uso della valvola riconducibili a tali modifiche annullano la presente dichiarazione. Per ulteriori informazioni si raccomanda la lettura dei «Fondamenti di progettazione Georg Fischer» (v. Indicazioni Generali Capitolo 0.3).

Schaffhausen, il 16.10.2002

Hartmut Behlau
Gerente dei sistemi
industriali

Manfred Leyrer
Incaricato management
qualità

GEORG FISCHER +GF+
Piping Systems

A Georg Fischer Rohrleitungssysteme GmbH, Sandgasse 16, 3130 Herzogenburg, Tel. +43(0)2782/856 43-0, Fax +43(0)2782/856 64, e-mail: office@georgfischer.at
AUS George Fischer Pty Ltd, 186–190 Kingsgrove Road, Kingsgrove NSW 2008, Tel. +61(0)2/95 54 39 77, Fax +61(0)2/95 02 25 61
B/L Georg Fischer NV/SA, Digue du Canal 109-111 – Vaartdijk 109-111, 1070 Bruxelles/Brüssel
Tél. +32(0)2/556 40 20, Fax +32(0)2/524 34 26, e-mail: info.be@be.piping.georgfischer.com
BR George Fischer Ltda, Av. das Nações Unidas 21689, 04795-100 São Paulo, Brasil, Tel. +55(0)11/5687 1311, Fax +55(0)11/5687 6009
CH Georg Fischer Rohrleitungssysteme (Schweiz) AG, Amsler-Laffon-Strasse 1, Postfach, 8201 Schaffhausen
Tel. +41(0)52 631 30 26, Fax +41(0)52 631 28 97, e-mail: info@rohrleitungssysteme.georgfischer.ch
CHINA Georg Fischer Piping Systems Ltd Shanghai, No. 218 Kang Qiao Dong Rd., Shanghai 201319
Tel. +86(0)21/58 13 33 33, Fax +86(0)21/58 13 33 66, e-mail: gfsro@public.shanghai.cngb.com
Georg Fischer Piping Systems (Trading) Ltd Shanghai, No 516 Fute Bei Road, Waigaoqiao Free Trade Zone, 200131 Pudong
Shanghai, Tel. +86(0)21/5868 0278, Fax +86(0)21/5868 0264, e-mail: gftrade@sh.cngb.com
D Georg Fischer GmbH, Daimlerstraße 6, 73095 Albershausen, Tel. +49(0)7161/302-0, Fax +49(0)7161/302 111
e-mail: info@georgfischer.de, Internet: http://www.rls.georgfischer.de
Georg Fischer DEKA GmbH, Kreuzstrasse 22, 35232 Dautphetal-Mornshausen
Tel. +49(0)6468/915-0, Fax +49(0)6468/915 221/222, e-mail: info@dekapipe.de, Internet: http://www.dekapipe.de
DK/IS Georg Fischer A/S, Rugvænget 30, 2630 Taastrup, Tel. +45 70 22 19 75, Fax +45 70 22 19 76
e-mail: info@dk.piping.georgfischer.com, Internet: http://www.georgfischer.dk
E George Fischer S.A., Alcalá, 85, 2º, 28009 Madrid, Tel. +34(0)91/781 98 90, Fax +34(0)91/426 08 23, e-mail: info@georgfischer.es
F George Fischer S.A., 105–113, rue Charles Michels, 93208 Saint-Denis Cedex 1, Tél. +33(0)1/49 22 13 41, Fax +33(0)1/49 22 13 00, e-mail: info@georgefischer.fr
GB George Fischer Sales Limited, Paradise Way, Coventry, CV2 2ST, Tel. +44(0)2476/535 535, Fax +44(0)2476/530 450
e-mail: info@georgefischer.co.uk, Internet: http://www.georgefischer.co.uk
GR George Fischer S.p.A., Athens Branch, 101, 3rd September Str., 10434 Athen, Tel. +30(0)1/882 0491, Fax +30(0)1/881 0291, e-mail: dderv_piping_gf@oneway.gr
I Georg Fischer S.p.A., Via Sondrio 1, 20063 Cernusco S/N (MI), Tel. +3902/921 861, Fax +3902/921 86 24 7, e-mail: office@piping.georgfischer.it
ID George Fischer Representative Office, c/o Wisma Aria, 3rd Floor, Jl. H.O.S. Cokroaminoto 81, Jakarta 10310, Indonesia
Tel. +62(0)21/391 48 62, Fax +62(0)21/391 48 63
IND George Fischer Piping Systems Ltd, India Branch Office, Solitaire Corporate Park, 532, Building No. 5, 3rd Floor, Chakala
Ghatkopar Link Road, Andheri (E), 400 093 Mumbai, Tel. +91(0)22/820 2362, Fax +91(0)22/820 2462, e-mail: wpfunder@vsnl.net
J Georg Fischer Ltd, 2–47, Shikitsuhigashi 1-chome, Naniwa-ku, 556-8601 Osaka, Tel. +81(0)6/664 82 59 4, Fax +81(0)6-664 82 56 5, e-mail: info@georgfischer.jp
N Georg Fischer AS, Rudsletta 97, 1351 Rud, Tel. +47(0)67 18 29 00, Fax +47(0)67 13 92 92, Internet: http://www.georgfischer.no
NL Georg Fischer N.V., Postbus 35-8160, 8161 PA Epe, Tel. +31(0)578/678222, Fax +31(0)578/621768
e-mail: info.vgnl@nl.piping.georgfischer.com, Internet: http://www.georgfischer.nl
PL Georg Fischer Sp. z o.o., ul. Radiowa 1A, 01-485 Warszawa, Tel. +48(0)22/638 91 39, Fax +48(0)22/638 00 94
RO Georg Fischer Rohrleitungssysteme AG, Rep. Office Romania, 11 Barbu Delavrancea, 70000 Bucharest - Sector 1
Tel. +40(0)11/222 91 36, Fax +40(0)11/222 91 77, e-mail: office@georgfischer.ro
RU Georg Fischer Piping Systems Ltd, Moscow Representative Office, Sheremetievskaya ul., 47, 127521 Moscow
Tel. +7 095/219 9604, Fax +7 095/232 3625, e-mail: lazer@orc.ru
S/FIN Georg Fischer AB, Box 113, 12523 Alvsjö-Stockholm, Tel. +46(0)8/506 77 500, Fax +46(0)8/749 23 70, e-mail: info@georgfischer.se, Internet: http://www.georgfischer.se
SGP George Fischer Pte Ltd, 15 Kaki Bukit Road 2, KB Warehouse Complex, 417 845 Singapore, Tel. +65(0)7/47 06 11, Fax +65(0)7/47 05 77, e-mail: info@georgfischer.com.sg
USA George Fischer Inc., 2882 Dow Avenue, Tustin, CA 92780-7258 Tel. +1(714) 731 88 00, Toll Free 800/854 40 90
Fax +1(714) 731 62 01, e-mail: info@us.piping.georgefischer.com, Internet: http://www.us.piping.georgefischer.com
Export Georg Fischer Rohrleitungssysteme AG, Ebnatstrasse 111, Postfach, CH-8201 Schaffhausen, Tel. +41(0)52 631 11 11
Fax +41(0)52 631 28 93/631 28 58, e-mail: export@piping.georgfischer.com, Internet: http://www.piping.georgfischer.com

Fi 5684/1, 2, 4, 3 (2.03) 161 484 582

© Georg Fischer Rohrleitungssysteme AG, CH-8201 Schaffhausen/Schweiz, 2002

1 Sicherheitshinweise

Für Kugelhähne gelten dieselben Sicherheitsvorschriften wie für das Rohrleitungssystem, in das sie eingebaut sind. Der Typ 546 ist ausschliesslich dazu bestimmt, nach Einbau in ein Rohrleitungssystem zugelassene Medien innerhalb der zugelassenen Druck- und Temperaturgrenzen abzusperren, durchzuleiten oder den Durchfluss zu regeln. Die maximale Betriebsdauer beträgt 25 Jahre.

> Vorsicht — **Bitte beachten Sie, dass der maximale Betriebsdruck der gesamten Armatur von dem maximal zulässigen Nenndruck des Anschlussteils bestimmt wird.**

Jede Person, die im Betrieb des Anwenders mit der Montage, Demontage, Inbetriebnahme, Bedienung und Instandhaltung (Inspektion, Wartung, Instandsetzung) der Armatur befasst ist, muss die komplette Bedienungsanleitung und besonders diesen Abschnitt «Sicherheitshinweise» gelesen und verstanden haben.
Dem Anwender wird empfohlen, sich dies jeweils schriftlich bestätigen zu lassen. Deshalb:

- Die Armatur nur in technisch einwandfreiem Zustand benutzen und diese Sicherheitshinweise unbedingt beachten
- Diese Dokumentation in der Nähe der Armatur aufbewahren

Es unterliegt der Verantwortung des Planers/Installateurs von Rohrleitungssystemen und des Betreibers solcher Anlagen, in die der Kugelhahn eingebaut ist, sicherzustellen, dass

- das Rohrleitungssystem fachgerecht verlegt ist und regelmässig auf seine Funktionstüchtigkeit überprüft wird
- nur fachlich qualifiziertes und autorisiertes Personal den Kugelhahn einbaut, bedient, wartet und repariert. Das Personal muss regelmässig in allen zutreffenden Fragen der örtlich geltenden Vorschriften für Arbeitssicherheit und Umweltschutz – insbesondere solche für druckführende Rohrleitungen – unterwiesen werden
- die Armatur bestimmungsgemäss nur so verwendet wird, wie in diesem Abschnitt Sicherheitshinweise beschrieben
- Einbaulagen und Orte, bei denen eine Betätigung unbeabsichtigt erfolgen kann, vermieden werden.

2 Gefahrenhinweise

> Warnung — **Kugelhähne nicht für Medien mit Feststoffen verwenden. Im Regelbetrieb ist Kavitation zu vermeiden.**
> Es können Schädigungen/Undichtheiten infolge Abrasion (Abrieb) auftreten.

> Warnung — **Ausbau des Typs 546 aus der Rohrleitung**
> Wurde der Druck nicht vollständig abgebaut, kann das Medium unkontrolliert entweichen.
> Je nach Art des Mediums besteht Verletzungsgefahr.
> **▶ Druck in der Rohrleitung vor dem Ausbau vollständig abbauen. Bei gesundheitsschädlichen, brennbaren oder explosiven Medien muss die Rohrleitung vor dem Ausbau vollständig entleert und gespült werden (Vorsicht: mögliche Rückstände beachten)**

> Warnung — **Durch einen Typ 546, der als Endarmatur einer unter Druck stehenden Rohrleitung verwendet wird, soll Medium abgelassen werden.**
> Das Medium kann unkontrolliert austreten/herumspritzen.
> Je nach Art des Mediums besteht Verletzungsgefahr.
> **▶ Gewährleisten Sie ein sicheres Auffangen des Mediums durch entsprechende Massnahmen (z.B. Anschluss eines Auffangbehälters)**

> Warnung — **Der Typ 546 soll nach dem Ausbau gelagert oder zerlegt werden.**
> Restmedium kann unkontrolliert austreten.
> Je nach Art des Mediums besteht Verletzungsgefahr.
> **▶ Öffnen Sie den ausgebauten Typ 546 halb (45° Stellung) und lassen Sie den Typ 546 in senkrechter Lage leerlaufen – das Medium muss hierbei aufgefangen werden.**

3 Transport und Lagerung

Der Typ 546 muss sorgfältig behandelt, transportiert und gelagert werden. Hierzu sind folgende Punkte zu beachten:

- Der Typ 546 muss in der ungeöffneten Originalverpackung transportiert und/oder gelagert werden.
- Der Typ 546 ist vor schädlichen physikalischen Einflüssen wie Licht, Staub, Wärme (Feuchtigkeit) und Strahlung zu schützen.
- Insbesondere die Anschlussteile dürfen weder durch mechanische noch durch thermische Einflüsse beschädigt werden.
- Der Typ 546 soll in geöffneter Hebelstellung (Anlieferungszustand) gelagert werden.

4 Vorbereitung des Einbaus

Unmittelbar vor der Montage ist der Kugelhahn auf Transportschäden zu untersuchen. Beschädigte Kugelhähne dürfen nicht eingebaut werden. Eine Funktionsprobe – Kugelhahn von Hand schliessen und wieder öffnen – ist durchzuführen. Kugelhähne mit erkennbarer Funktionsstörung dürfen nicht eingebaut werden.

> Vorsicht — **Der Kugelhahn muss stets in geöffneter Kugelstellung in das System eingebaut werden.**

Es dürfen nur Kugelhähne eingebaut werden, deren Druckklasse, Anschlussart und Anschlussabmessungen den Einsatzbedingungen entsprechen. Bei Schweiss- und Klebeverbindungen dürfen nur identische Werkstoffe miteinander verbunden werden.

5 Einbau des Typs 546

> Warnung — **Der Typ 546 hat gegenüber dem Typ 346 veränderte Einbaumasse, Anschlüsse und Überwurfmuttern.**
> Eine Verwendung anderer Bauteile und Einbaumasse (als für Typ 546 vorgesehen) kann zu Schäden des Rohrleitungssystems führen.
> **▶ Einbaumasse und -bezeichnungen in den technischen Dokumentationen mit den vorliegenden Bauteilen abgleichen.**

Es wird empfohlen, den Kugelhahn erst unmittelbar vor dem Einbau der Originalverpackung zu entnehmen. Kugelhahn und Rohrleitung müssen fluchten, damit die Armatur von mechanischen Beanspruchungen freigehalten wird. Zum Einbau in das Rohrleitungssystem müssen die spezifischen Verbindungsvorschriften für Klebe-, Schweiss- oder Schraubverbindungen eingehalten werden. Informationen können den Betriebs-/Klebeanleitungen der Schweissmaschinen bzw. Klebstoffhersteller entnommen werden. Die Anzugsmomente der Flanschschrauben und weitere Informationen können den **«Georg Fischer Planungsgrundlagen»** entnommen werden.
Der Einbau des Kugelhahns erfolgt gemäss Abbildungen **a – d.**
Verbinden Sie die Anschlussteile gemäss ihrem Material und ihrer Ausführung mit den Rohrenden (Schweissen, Kleben, Schrauben, Flanschen)

> Warnung — **Die Überwurfmuttern des Typs 546 sind handfest – ohne den Einsatz von Hilfswerkzeug – anzuziehen.**
> Durch Einsatz von Zangen oder vergleichbaren Hilfsmitteln kann das Material der Überwurfmutter beschädigt werden. Weiter besteht die Gefahr, dass durch zu starke Anzugskräfte das Gewinde beschädigt wird.

Die Betätigung einer Armatur ruft Reaktionskräfte in der angeschlossenen Leitung hervor. Es ist deshalb erforderlich, den Kugelhahn als Festpunkt an seiner integrierten/separaten Befestigung (falls vorhanden) zu montieren oder die zugehörige Rohrleitung direkt vor und nach dem Kugelhahn mittels entsprechender Halterungen zu befestigen.

> Warnung — **Wenn Sie die integrierte Befestigung im Fuss des Typs 546 nutzen, beachten Sie die Angaben der max. Einschraubtiefe der Schrauben.**
> Eine Nichtbeachtung kann zur Beschädigung des Kugelhahngehäuses führen. Die Druckbelastung eines beschädigten Gehäuses kann zum Bruch führen.

Max. Einschraubtiefe der Schrauben in den Kugelhahn

DN	10/15	20/25	32/40	50
Schraube	M6	M6	M8	M8
Einschraubtiefe H [mm]	12	12	15	15

> Warnung — In Rohrleitungssystemen, die Temperaturwechseln unterliegen, treten im Fall einer Behinderung der Wärmeausdehnung Längs- bzw. Biegekräfte auf. Um die Funktionsweise der Armatur nicht zu beeinträchtigen, müssen diese Kräfte durch geeignete Festpunkte vor bzw. hinter der Armatur aufgenommen werden.

Für die Befestigung der Armatur von vorn bietet **+GF+** Ihnen eine Befestigungsplatte (30) an. Mit dieser Platte werden die Kräfte aufgenommen, die bei der Betätigung der Armatur entstehen können (z. B. Losbrechmoment). Durch Verwendung der Befestigungsplatte wird eine Übertragung der Bedienungskräfte auf das Rohrleitungssystem vermieden. Weitere Informationen finden Sie im aktuellen **+GF+** Lieferprogramm.

6 Druckprobe

Für die Druckprobe von Kugelhähnen gelten dieselben Anweisungen wie für die Rohrleitung. Detaillierte Informationen können den «Georg Fischer Planungsgrundlagen» Kapitel **Verarbeitung und Verlegung** entnommen werden. Zusätzlich gilt:

- Kontrollieren Sie, ob alle Armaturen in der erforderlichen Offen- oder Geschlossenstellung sind
- Füllen Sie das Leitungssystem und entlüften Sie sorgfältig

> Vorsicht — Der Prüfdruck einer Armatur **darf den Wert 1.5 x PN, (höchstens aber PN + 5 bar) nicht überschreiten.** Die Komponente mit dem niedrigsten PN bestimmt den maximal zulässigen Prüfdruck im Leitungsabschnitt.

- Prüfen Sie während der Druckprobe die Armaturen und Anschlüsse auf Dichtheit. Protokollieren Sie die Ergebnisse.

7 Bestimmungsgemässe Nutzung

Wenn die Dichtheitsprüfung erfolgreich durchgeführt wurde, kann das Prüfmedium entfernt werden.
Die bestimmungsgemässe Nutzung der Anlage kann nun erfolgen.

8 Wartung – Instandhaltung

Kugelhähne benötigen im normalen Betrieb keine Wartung. Es reicht aus, periodisch zu überprüfen, ob nach aussen kein Medium austritt. Bei Leckage oder sonstigen Störungen sind unbedingt die Abschnitte 1, 2 «Sicherheitshinweise, Gefahrenhinweise» zu beachten.
Es wird empfohlen, Kugelhähne, die dauernd in der gleichen Stellung sind, 1–2 x pro Jahr zu betätigen, um ihre Funktionsfähigkeit zu überprüfen.
Bei häufigen Stellbewegungen – z.B. durch Automatisierung der Armatur oder infolge chemischen Angriffs auf das Dichtungsmaterial – kann es notwendig sein, Teile im Innern der Armatur auszutauschen. Zu diesem Zweck muss die Armatur aus dem Rohrleitungssystem unter Beachtung des Abschnittes 2 «Gefahrenhinweise» ausgebaut werden.

Explosionszeichnung Handarmatur:

1 Gehäuse
2 Einschraubteil
3 Anschlussteil
4 Überwurfmutter
5 Kugel
6 Zapfen
7 Kugeldichtung
8 Hinterlagedichtung
9 Gehäusedichtung
10 Anschlussteildichtung
11 Zapfendichtung
12 Standardhebel
13 Hebelklipp
14 Gewindebuchsen
22 Multifunktionshebel
23 Distanzring
24 Entriegelungstaster
25 Befestigungsschraube (Torx)
30 Befestigungsplatte
31 Befestigungsschrauben

Wurde der Kugelhahn durch Lösen der Überwurfmuttern (4) aus der Leitung entfernt und kann eine Restentleerung sichergestellt werden, so sind zur **Demontage** die Schritte **e – i** auszuführen:

! Bitte beachten Sie, dass das Einschraubteil (2) ein Linksgewinde hat.

Die Dichtungselemente sowie Kugel, Zapfen und Einschraubteil können ausgetauscht werden. Georg Fischer bietet zu diesem Zweck entsprechende Ersatzteilsets an.

> Vorsicht — Bei einem Austausch dürfen ausschliesslich die für die Armatur vorgesehenen Georg Fischer Original-Ersatzteile verwendet werden. Ersatzteile für den Typ 546 können mit den Angaben auf dem Typenschild bestellt werden.

> Vorsicht — **Schmiermittelauswahl**
> Der Einsatz ungeeigneter Schmiermittel kann den Werkstoff des Kugelhahns oder der Dichtungen angreifen. Es dürfen keinesfalls Schmiermittel auf Mineralölbasis oder Vaseline (Petrolatum) verwendet werden.
> Für lackstörungsfreie Kugelhähne sind die speziellen Herstellerhinweise zu beachten.
> **▶ Alle Dichtungen sind mit Fett auf Silikon- oder Polykolbasis zu schmieren.**

> Vorsicht — **Handhabung der Dichtungen**
> Alle Dichtungen (Material z.B. EPDM, FPM) sind organische Werkstoffe. Sie reagieren auf Umwelteinflüsse und müssen daher in ihrer Originalverpackung möglichst kühl, trocken und dunkel gelagert werden. Die Dichtungen sind vor dem Einbau auf mögliche Alterungsschäden wie Anrisse und Verhärtungen zu prüfen.
> **▶ Schadhafte Ersatzteile dürfen nicht zum Einsatz gelangen.**

Bei der **Montage** der Einzelteile und Austausch der Dichtungen sind die Schritte **k – s** auszuführen:

! Der Anzug des Anschraubteils (2) muss so gewählt werden, dass die Kugel noch satt drehbar ist.

9 Montage und Betätigung des MF-Hebels

Alternativ zum Standardhebel können Sie für den Typ 546 einen verriegel- und abschliessbaren Multifunktionshebel (MF-Hebel) verwenden.

Explosionszeichnung MF-Hebel (s. kleines Bild oben)

Zur Montage des MF-Hebels sind die Schritte **t – w** auszuführen:

! Am unteren Teil des Hebelschafts befindet sich ein Distanzring (23). Kontrollieren Sie seinen korrekten Sitz im Schaft (Arretierung).

Zur Bedienung des MF-Hebels sind die Schritte **x – y** auszuführen.

x: Drücken Sie den Taster (24) zur Entriegelung in den Hebel hinein. Halten Sie den Taster in dieser Position. Der Hebel kann nun um 90° bewegt werden.

y: Der Hebel wird in der entsprechenden Position verriegelt und kann in dieser Position durch ein Schloss vor unbefugtem Zugriff gesichert werden.

1 Indications de sécurité

Les robinets à bille sont soumis aux mêmes instructions de sécurité que le système de tuyauterie dans lequel ils sont installés. Le type 546 sert exclusivement, après l'installation dans le système de tuyauterie, à arrêter, conduire ou régler le débit des fluides autorisés dans les limites de pressions et de températures autorisées. Sa durée de service maximale est de 25 ans.

> Attention — **Tenez compte que la pression de service max. de la vanne complète est définie par le pression nominale max. autorisée du collet.**

Toute personne responsable du montage, du démontage, de la mise en service, de l'utilisation et de la maintenance (inspection, entretien, réparation) de la vanne dans l'entreprise de l'utilisateur, devra avoir lu intégralement et compris les instructions de service et, notamment, la présente section «Indications de sécurité».
Nous conseillons à l'utilisateur de se faire remettre une confirmation écrite certifiant que cette condition a été remplie. C'est pourquoi:

- Utiliser la vanne uniquement en état technique impeccable et se conformer strictement aux présentes indications de sécurité.
- Conserver cette documentation dans le voisinage immédiat de la vanne.

Il relève de la responsabilité de l'ingénieur d'études/installateur du système de tuyauterie et de l'utilisateur des installations dans lesquelles est montée la vanne de s'assurer que:

- le système de tuyauterie a été posé de manière correcte et que le bon fonctionnement de ce dernier est soumis à des contrôles réguliers;
- seules des personnes de qualification technique appropriée et autorisées se chargent du montage, de l'utilisation, de la maintenance et de la réparation du robinet à bille. Le personnel doit être formé régulièrement sur tous les aspects des dispositions en vigueur relatives à la protection du travail et de l'environnement, notamment celles touchant aux systèmes de tuyauterie sous pression.
- la vanne soit utilisée de manière rigoureusement conforme à sa destination et conformément à la description de la présente section des indications de sécurité.
- les positions de montage et les emplacements, dans lesquels un actionnement intempestif est possible, sont évités.

2 Indications de danger

> Avertissement — **Ne pas utiliser les robinets à bille pour les fluides contenant des corps solides. En mode de service normal, éviter toute cavitation.**
> Des dommages/fuites pourraient résulter de l'abrasion (usure).

> Avertissement — **Démontage du type 546 du système de tuyauterie**
> Le fluide pourrait s'écouler de manière incontrôlée si la baisse de pression ne s'est pas faite intégralement. Il existe un risque de blessure selon le type de fluide.
> **▶ Baisser totalement la pression dans le système de tuyauterie avant le démontage du robinet à bille. En la présence de fluides toxiques, inflammables ou explosifs, vider totalement la tuyauterie et rincer cette dernière avant le démontage du robinet à bille. (Attention: tenir compte des dépôts éventuels)**

> Avertissement — **Un fluide doit être évacué par le biais d'un type 546, utilisé comme armature d'extrémité d'un tuyau sous pression.**
> Le fluide peut s'évacuer de manière incontrôlée/par projection.
> Il existe un risque de blessure selon le type de fluide.
> **▶ Garantissez une récupération sûre du fluide par des mesures appropriées (par exemple le raccordement d'un récipient de récupération).**

> Avertissement — **Un type 546 doit être stocké ou démonté**
> Les restes de fluides peuvent s'évacuer de manière incontrôlée.
> Il existe un risque de blessure selon le type de fluide.
> **▶ Ouvrir le type 546 jusqu'à la moitié (position 45 °) et le laisser se vider à la position verticale – en récupérant le fluide qui s'écoule.**

3 Transport et stockage

Le type 546 doit être manipulé, transporté et stocké avec précautions. Conformez-vous strictement aux points suivants:

- Transporter et/ou stocker impérativement le type 546 dans son emballage original fermé.
- Protéger le type 546 envers les influences physiques néfastes telles que la lumière, la poussière, la chaleur (l'humidité) et les rayonnements.
- Eviter notamment que les pièces de raccordement puissent s'endommager sous des effets mécaniques ou thermiques.
- S'assurer que le levier du type 546 est à la position ouverte (état à la livraison) en stockant ce dernier.

4 Préparation du montage

Immédiatement avant le montage, assurez-vous par un contrôle que le robinet à bille ne souffre d'aucun dégât provoqué par le transport. Il n'est pas permis d'installer des robinets à bille endommagés. Un essai de fonctionnement – fermer manuellement et ouvrir de nouveau le robinet à bille – devra être effectué avant le montage. Il n'est pas permis d'installer des robinets à bille présentant des anomalies de fonctionnement évidentes.

> Attention — **L'installation du robinet à bille dans le système de tuyauterie doit impérativement se faire à la position ouverte de la bille.**

Il n'est permis d'installer que des robinets à bille dont la classe de pression, le raccordement et les dimensions de raccordement correspondent à vos conditions d'utilisation. Pour les assemblages par soudage ou par collage, il n'est permis d'assembler que des éléments en matériaux identiques.

5 Montage du type 546

> Avertissement — **Le type 546 possède des dimensions de montage, des collets et des écrous modifiés par rapport à ceux du type 346.**
> Toute utilisation de pièces et de dimensions de montages différentes (autres que celles recommandées pour le type 546) sera susceptible de provoquer des dégâts au système de tuyauterie.
> **▶ Comparer impérativement les dimensions et schémas de montage fournis dans la documentation technique avec les pièces livrées.**

Nous recommandons de ne sortir le robinet à bille de son emballage original que peu de temps avant l'installation. Le robinet à bille et le conduit de tuyau doivent être alignés l'un sur l'autre afin que la vanne soit mise à l'abri des sollicitations mécaniques. Lors de l'installation dans le système de tuyauterie, conformez-vous impérativement aux instructions d'assemblage afférentes aux assemblages par soudage, collage ou vissage. De plus amples informations vous seront fournies à cet effet par les instructions d'utilisation et de collage élaborées par les constructeurs et fabricants de machines de soudage et de colles. **«Les documents d'études et de planification Georg Fischer»** vous fourniront en outre des renseignements sur les couples de serrage des brides visées ainsi que bien d'autres informations.
L'installation du robinet à bille s'effectuera suivants les figures **a – d.**
Assemblez les pièces de raccordement avec les extrémités des tubes selon leur matériau et leur modèle de machine (souder, coller, visser, brider).

> Avertissement — **Les écrous du type 546 doivent être serrés à la main, sans toute utilisation d'outil quelconque.**
> L'utilisation de pinces ou d'outils de secours similaires est susceptible d'endommager le matériau de l'écrou. Il en résulte en outre le risque d'endommager le filetage sous l'effet de forces de serrage excessives.

L'actionnement de la vanne provoque des forces de réaction dans la conduite raccordée. Il est donc nécessaire de monter le robinet à bille comme point fixe sur son support intégré/séparé (si un tel existe) ou de fixer le conduit de tuyau concerné par des serrages appropriés immédiatement en amont et en aval du robinet à bille.

> Avertissement — **Tenez compte des indications sur la profondeur max. de vissage des vis dans le cas où vous utiliseriez la fixation intégrée au pied du type 546.**
> Le non-respect de cette recommandation est susceptible d'entraîner des dégâts sur le boîtier du robinet à bille. La contrainte de pression sur un boîtier endommagé pourra provoquer sa rupture.

Profondeur de vissage maximale des vis dans le robinet à bille

DN	10/15	20/25	32/40	50
Vis	M6	M6	M8	M8
Prof. de vissage H [mm]	12	12	15	15

> Avertissement — En cas d'empêchement de la dilatation thermique, des forces d'allongement thermique linéaire et de flexion apparaîtront dans les systèmes de tuyauterie soumis à des fluctuations de températures. Pour ne pas perturber le fonctionnement du robinet à bille, ces forces devront être absorbées par des points fixes appropriés en amont et en aval de la vanne.

+GF+ propose une plaque de fixation (30) pour fixer la vanne par l'avant. Grâce à cette plaque, les forces, éventuellement générées par l'actionnement du robinet à bille (par exemple le couple initial de décollement), sont absorbées. Par l'utilisation de la plaque de fixation, vous empêcherez la transmission des forces d'actionnement sur le système de tuyauterie. Vous trouverez de plus amples informations dans le programme de livraison actuel **+GF+**.

6 Epreuve statique

Les essais statiques des robinets à bille sont régis par les mêmes instructions que les systèmes de tuyauterie. «Les documents d'études et de planification Georg Fischer» chapitre mise en œuvre et installation, vous fourniront des renseignements plus détaillés. En outre:

- Vérifier que toutes les vannes sont bien aux positions ouvert ou fermé nécessaires
- Remplir le système de tuyauterie et désaérer ce dernier soigneusement

> Attention — La pression d'essai de la vanne **ne doit en aucun cas dépasser la valeur 1,5 x PN (max. PN + 5 bar)**. Le composant présentant la plus faible valeur PN détermine la pression d'essai maximale autorisée dans le segment de conduit.

- Pendant l'essai statique, contrôler l'étanchéité des vannes et des raccords. Consigner tous les résultats par écrit.

7 Utilisation conforme à la destination

Le fluide utilisé pour l'essai statique peut être évacué une fois que le contrôle d'étanchéité s'est effectué avec succès.
Il est maintenant possible de passer à l'utilisation de la vanne conformément à sa destination.

8 Entretien – maintenance

Les robinets à bille ne nécessitent aucune mesure de maintenance en mode de service normal. Il suffit de contrôler périodiquement qu'il n'existe pas de fuite de fluide vers l'extérieur. En cas de fuites ou d'anomalies quelconques, conformez-vous impérativement aux chapitres 1, 2 «Indications de sécurité», «Indications de danger».
Nous vous recommandons d'actionner 1–2 fois par an les robinets à bille qui restent en permanence à la même position, ceci afin de contrôler leur bon fonctionnement.
En cas de mouvements de réglage fréquents, par exemple en raison de l'automatisation de la vanne ou à la suite d'agressions chimiques sur le matériau d'étanchéité, il pourrait devenir nécessaire de remplacer des composants à l'intérieur de la vanne. Dans ce cas, il faudra démonter la vanne du système de tuyauterie en vous conformant aux indications de la section 2 «Indications de danger».

Vue explosée des robinetteries manuelles

1 Boîtier
2 Pièce filetée
3 Collet
4 Ecrou
5 Bille
6 Pivot
7 Joint de bille
8 Joint sous-jacent
9 Joint du corps
10 Joint frontal
11 Joint de pivot
12 Levier standard
13 Bride de levier
14 Douille filetée
22 Levier multifonction
23 Anneau d'écartement
24 Bouton de déverrouillage
25 Vis de fixation (Torx)
30 Plaque de fixation
31 Vis de fixation

Si le robinet à bille a été démonté du conduit par desserrage de l'écrou (4) et si vous pouvez garantir un vidage total, exécutez pour le **démontage** les étapes **e – i**:

! Notez bien que la pièce filetée (2) possède un filetage à gauche!

Il est possible de remplacer les éléments d'étanchéité ainsi que la bille, le pivot et la pièce filetée. Georg Fischer vous propose à cet effet des kits de pièces de rechange appropriés.

> Attention — Utiliser exclusivement des pièces de rechange originales Georg Fischer conçues pour la vanne utilisée. Les pièces de rechange pour le type 546 pourront être commandées grâce aux indications figurant sur la plaque signalétique du robinet à bille.

> Attention — **Choix du lubrifiant**
> L'utilisation de lubrifiants inappropriés est susceptible d'agresser le matériau du robinet à bille ou des joints. Il n'est en aucun cas permis d'utiliser des lubrifiants à base d'huile minérale ou de vaseline (pétrolatum).
> Conformez-vous aux instructions spécifiques du fabricant afin d'obtenir des robinets à bille sans problèmes de fuite.
> **▶ Les joints doivent être enduits de graisse à base de silicone/ Polycol.**

> Attention — **Manipulation des joints**
> Tous les joints (par exemple de matériaux EPDM, FPM) sont des matières organiques. Ils réagissent donc aux influences ambiantes; c'est pourquoi ils doivent être stockés dans leurs emballages respectifs à un endroit frais, sec et à l'abri de la lumière. Avant le montage, contrôler que les joints ne présentent pas de dégâts de vieillissement tels que les fissures et les durcissements.
> **▶ Il n'est pas permis d'utiliser des pièces de rechange endommagées.**

Exécuter les étapes **k – s** lors du **montage** des pièces de rechange/du remplacement des joints:

! Le serrage de la pièce filetée (2) doit être choisi de manière à ce que la bille puisse encore tourner librement.

9 Montage et actionnement du levier multifonction

Au lieu du levier standard, vous pouvez pour le type 546 utiliser un levier multifonction (levier MF) condamnable et verrouillable.
Vue explosée du levier multifonction (cf. petite image en haut)
Accomplissez les étapes de travail **t – w** pour le montage du levier multifonction:

! Un anneau d'écartement (23) est monté sur la partie inférieure de la tige du levier. Contrôlez que cet anneau est correctement monté (arrêtoir).

Accomplissez les étapes **x – y** pour l'utilisation du levier multifonction:

x: Appuyez sur le bouton (24) dans le levier pour déverrouiller ce dernier. Maintenez le bouton à cette position. Il est maintenant possible de tourner le levier de 90°.

y: Verrouillez le levier à la position souhaitée; vous pouvez alors l'y condamner au moyen d'un cadenas pour empêcher toute manipulation intempestive.

1 Safety information

The same safety guidelines apply for ball valves as for the piping system into which they are built. The 546 valve is intended exclusively for shutting off and conducting allowed media within the allowable pressure and temperature range or for controlling flow in the piping systems into which it has been installed. The maximum service life is 25 years.

> Caution — **Please note that the max. working pressure of the complete valve is defined by the max. allowed nominal pressure of the valve end.**

Anyone involved with the mounting, dismounting, operation, handling and maintenance (inspection, service and repair) of the valve at the plant where it is installed must have read and understood the complete instruction manual, in particular this paragraph pertaining to safety information.
We recommend having this confirmed in writing. Furthermore:

- Use only perfectly functioning valves and always observe these safety guidelines.
- This documentation must be kept readily available in the vicinity of the valve.

It is the responsibility of the piping systems engineer/installer and the operator of such systems into which the ball valve has been installed to warrant that

- the piping system has been installed correctly by professionals and its functionality is checked periodically,
- only qualified and authorized personnel mounts, operates, services and repairs the ball valve. Employees must be instructed on a regular basis in all aspects of work safety and environmental protection as indicated by the applicable local regulations – especially those pertaining to pressure-bearing piping,
- the valve is used only according to the specifications for which it has been intended, as indicated in this paragraph on safety,
- installation positions and locations in which manipulations can occur unintentionally must be avoided.

2 Hazardous situations

> Warning — **Do not use ball valves for media containing solids. Avoid cavitation in control operation.**
> This could lead to damages/leakage due to abrasion.

> Warning — **Removing the 546 valve from the pipeline**
> If the pressure has not been released completely, the medium can exit uncontrollably.
> Depending on the type of medium, injury may occur.
> **▶ Before dismounting, release all pressure from the piping system. For hazardous, flammable or explosive media, the piping system must be completely emptied and rinsed before the valve may be dismounted (Attention: there could still be residue).**

> Warning — **Medium needs to be tapped from a 546 valve, which is used as an end valve in a pressure-bearing piping system.**
> The medium can exit/splash uncontrollably.
> Depending on the type of medium, injury may occur.
> **▶ Make certain that the medium is caught safely with the appropriate measures (e.g. connecting a vessel to collect the exiting medium).**

> Warning — **The 546 valve is to be stored or dismantled after removal from pipe.**
> Residual media can exit uncontrollably.
> Depending on the type of medium, injury may occur.
> **▶ Open the dismounted valve type 546 halfway (45° position) and let it drain in a vertical position – catch the medium in an appropriate vessel.**

3 Transport and storage

The ball valve type 546 must be handled, transported and stored with care. Please note the following:

- The 546 valve should be transported and/or stored in its original, unopened packaging.
- The 546 valve must be protected from harmful physical influences, such as light, dust, heat (humidity) and UV radiation.
- The connecting parts of the ball valve in particular must not be damaged by mechanical or thermal influences.
- The 546 valve should be stored with the lever in the opened position (as it was supplied).

4 Prior to installation

To begin with, the ball valve should be inspected for transport damages. Damaged valves must not be installed. A function test – close the ball valve by hand and open it again – should be done. Ball valves which do not function properly must not be installed.

> Caution — **The ball valve must always be built into the system in the opened position.**

Only ball valves whose pressure rating, type of connection and dimensions correspond to the operating conditions should be installed. For fusion and cemented connections, only join identical materials with one another.

5 Installation of the type 546

> Warning — **The installation dimensions, connections and union nuts of the type 546 valve have been modified from the type 346.**
> The use of components and installation dimensions other than those prescribed for the type 546 can cause damage to the piping system.
> **▶ Compare the installation dimensions and specifications in the technical documentation with those of the components at hand.**

We recommend only removing the ball valve from its original packaging immediately before installation. The ball valve and the pipe must be aligned so that the valve is kept free of mechanical stress. The specific jointing instructions for solvent cementing, fusion and screw connection methods must be adhered to when installing the valve into the piping system. More information can be found in the operating manuals of the fusion machines or the cementing instructions of the adhesive manufacturer. The tightening torque of the flange screws and other useful information can be found in the **«Georg Fischer Planning Fundamentals»**.

Install the ball valve according to the illustrations **a – d.**
Join the connecting parts with the pipe ends according to their materials and types (fusion, cementing, screwing, flanges).

> Warning — **The union nuts of the type 546 should be hand-tightened – without the use of additional tools.**
> If other tools, such as pliers, are used, the material of the union nuts could be damaged. Additionally, if they are tightened too strongly, it is possible for the thread to become damaged.

Operation of a valve causes reactive forces in the pipe to which it is connected. It is therefore necessary to mount the ball valve as a fixed point with its integrated/separate fastener (if available) or to reinforce the corresponding piping directly before and after the ball valve with suitable supports.

> Warning — **If you use the integrated fastening system in the base of the type 546, please take note of the max. insertion depth of the screws.**
> Failure to comply can lead to damage of the ball valve housing. The pressure load on a damaged housing could cause breakage.

Max. insertion depth of the screws in the ball valve

DN	10/15	20/25	32/40	50
Screw	M6	M6	M8	M8
Insertion depth H [mm]	12	12	15	15

> Warning — In piping systems with temperature fluctuations, bending and longitudinal forces can occur if heat expansion is hindered. So as not to impair the functioning of the valve, these forces must be absorbed by implementing suitable fixed points in front of or behind the valve.

For front fastening, **+GF+** has a mounting plate (30) on offer. When this plate is used, forces which can occur during valve operation are absorbed (e.g. initial break-away torque); the operating forces are thus prevented from being transferred over to the piping system. For more information, please see the valid **+GF+** product range.

6 Pressure test

Ball valve pressure testing is subject to the same regulations as apply to the piping system. Detailed information can be found in the «Georg Fischer Planning Fundamentals,» in the chapter on **Handling and Installation**. Also applicable:

- Check that all valves are in the required open or closed position
- Fill the piping system and deaerate carefully

> Caution — The test pressure on a valve must **not exceed the value 1.5 x PN, (maximum PN + 5 bar).** The components with the lowest PN determine the maximum allowable test pressure in the piping section.

- Check the valves and connections for leaks during the pressure test. Document your results.

7 Intended use

When the leak test has been completed successfully, remove the test medium.
The system can now be used as intended.

8 Service – Maintenance

Ball valves require no maintenance under normal operating conditions. Periodic inspection to make sure that no medium is leaking is sufficient. Should leakage or other malfunctions occur, follow the instructions given under paragraphs 1, 2 «Safety information, Hazardous situations».
We recommend a function test for ball valves which are kept permanently in the same position 1–2 x a year to check serviceability.
For frequent control operations – valve automation, or due to chemical attack on the sealing material – it may become necessary to replace parts inside the valve. For this purpose, the valve must be removed from the piping system, keeping paragraph 2 «Hazardous situations» in mind.

Exploded drawing of manual valve:

1 Body
2 Union bush
3 Connecting part
4 Union nut
5 Ball
6 Stem
7 Ball seal
8 Backing seal
9 Body seal
10 Union seal
11 Stem seal
12 Standard lever
13 Lever clip
14 Threaded insert
22 Multi-functional lever
23 Spacer
24 Unlocking latch
25 Fastening screw (Torx)
30 Mounting plate
31 Fastening screws

When the ball valve has been removed from the pipe by loosening the union nut (4) and preparations have been made for drainage, **disassemble** the valve by following steps **e – i**:

! Please note that the union bush (2) has left-handed thread.

The sealing elements, as well as the ball, stem and union bush can be replaced.
Georg Fischer has the respective spare parts kits on offer.

> Caution — Only original Georg Fischer spare parts designed specifically for this valve may be used for replacement purposes. Orders for spare parts for the 546 ball valve should include all the details given on the type plate.

> Caution — **Lubricants**
> Using the wrong lubricants can damage the material of the ball valve or seals. Never use petroleum-based greases or Vaseline (Petrolatum).
> For silicon-free ball valves, please consult the special manufacturer's instructions.
> **▶ All the seals must be lubricated with a silicon or polyglycol based grease.**

> Caution — **Seals**
> All the seals (made of e.g. EPDM, FPM) are organic materials which react to environmental influences. They must therefore be kept in their original packaging, and stored cool, dry and dark. The seals should be checked for damages from aging, such as fissures and hardening, before mounting.
> **▶ Do not use defective spare parts.**

To **assemble** the components and replace seals, follow the steps **k – s**:

! Tighten the union bush (2) so that the ball moves snugly.

9 Mounting and using the MF lever

As an alternative to the standard lever, you can install a lockable multi-functional (MF) lever for the type 546.

Exploded drawing for MF lever (see small drawing above)

To mount the MF lever, follow the steps **t – w**:

! There is a spacer (23) at the bottom of the lever shaft. Make sure it is positioned correctly in the shaft (catch).

To work the MF lever, follow the steps **x – y**.

x: Press the unlocking latch (24) into the lever. Hold the latch in this position and the lever can be moved 90°.

y: The lever will lock in the respective position and can be secured in this position with a lock, protecting it from unauthorized access.

1 Avvertenze di sicurezza

Per le valvole a sfera valgono le medesime norme di sicurezza del sistema di tubazione in cui sono installati. Il tipo 546 è previsto unicamente allo scopo di bloccare, dopo l'installazione in un sistema di tubazioni, le sostanze ammesse all'interno dei limiti di pressione e temperatura ammessi, far fluire o regolare il flusso. La durata di funzionamento massima è di 25 anni.

> Cautela — **Tenere conto che la pressione di servizio max. della valvola completa è definita dalla pressione nominale max. ammesa dell'attacco.**

Ogni persona che nell'azienda dell'utente si occupa di montaggio, smontaggio, messa in funzione, uso e manutenzione (ispezione, manutenzione, riparazione) della rubinetteria, deve aver letto e compreso tutte le istruzioni per l'uso e in particolare questo capitolo «Avvertenze di sicurezza». All'utente si consiglia di farsi confermare ciò per iscritto. Per questa ragione:

- utilizzare il rubinetto solo in condizioni tecniche ineccepibili e osservare assolutamente queste avvertenze di sicurezza
- conservare questa documentazione in prossimità del rubinetto

Il progettista/l'installatore dei sistemi di tubazione e l'operatore degli impianti dove è installata la valvola a sfera devono accertare che

- il sistema di tubazione venga posato a regola d'arte e il suo funzionamento venga controllato regolarmente
- che la valvola a sfera venga montata, usata, sottoposta a misure di riparazione e manutenzione solo da personale qualificato e autorizzato. Il personale deve essere regolarmente istruito in merito a tutte le questioni riguardanti le norme in vigore sul posto per la sicurezza e la protezione ambientale, con particolare riferimento alle norme sulle tubazioni a pressione
- la rubinetteria venga utilizzata solo conformemente all'uso previsto, come descritto in questo capitolo «Avvertenze di sicurezza»
- vengano evitate posizioni di installazione e luoghi dove può verificarsi un azionamento involontario.

2 Avvisi di pericolo

> Attenzione — **Non impiegare le valvole a sfera per materie con sostanze solide. Durante il funzionamento normale evitare la cavitazione.**
> Possono verificarsi danni/perdite a seguito di abrasione (usura).

> Attenzione — **Smontaggio del tipo 546 dalla tubazione**
> Se la pressione non è stata completamente tolta, la sostanza può deviare incontrollata. A seconda del tipo di sostanza c'è pericolo di lesione.
> **▶ Prima di smontare togliere completamente la pressione nella tubazione. Nel caso di sostanze dannose per la salute, combustibili o esplosive, prima di essere smontata la tubazione deve essere completamente svuotata e sciacquata (prestare attenzione a possibili residui).**

> Attenzione — **Mediante un tipo 546, che si impiega come rubinetto finale di una tubazione sotto pressione, si deve scaricare la sostanza.**
> La sostanza può fuoriuscire/spruzzare senza controllo.
> A seconda del tipo di sostanza c'é pericolo di lesione.
> **▶ Garantire una raccolta sicura della sostanza mediante misure adeguate (p.e. collegamento di un recipiente di raccolta).**

> Attenzione — **Dopo lo smontaggio il tipo 546 deve essere immagazzinato o disassemblato.** Sostanza residua può fuoriuscire senza controllo.
> A seconda del tipo di sostanza c'é pericolo di lesione.
> **▶ Aprire il tipo 546 smontato a metà (posizione 45°) e lasciare che si svuoti in posizione verticale – bisogna raccogliere la sostanza.**

3 Trasporto e immagazzinaggio

Il tipo 546 deve essere trattato, trasportato e immagazzinato con cura. A questo scopo osservare i seguenti punti:

- il tipo 546 deve essere trasportato e/o immagazzinato nell'imballaggio originale chiuso
- il tipo 546 deve essere protetto da fattori fisici dannosi, come luce, polvere, calore (umidità) e radiazione
- In particolare i pezzi di collegamento non devono essere danneggiate da fattori di influenza meccanici o termici
- il tipo 546 deve essere immagazzinato nella posizione a leva aperta (condizioni di consegna)

4 Preparazione del montaggio

Subito prima del montaggio si deve controllare che la valvola a sfera non presenti danni dovuti al trasporto. Non si devono montare valvole a sfera danneggiate. Effettuare una prova di funzionamento chiudendo e aprendo la valvola a sfera manualmente. Non si devono montare le valvole a sfera con guasti di funzionamento evidenti.

> Cautela — **La valvola a sfera deve essere sempre installata nel sistema in posizione sferica aperta.**

Si possono installare solo valvole a sfera la cui classe di pressione, tipo di collegamento, nonché misurazioni di collegamento corrispondono alle condizioni di impiego. Nel caso di collegamenti a saldatura o incollati si possono collegare tra loro solo materiali identici.

5 Installazione del tipo 546

> Attenzione — **Rispetto al tipo 346, il tipo 546 presenta quote di montaggio, attacchi e ghiere diversi.** L'impiego di altri componenti e quote di montaggio (cioè non previsti per il tipo 546) può causare danni al sistema di tubazione.
> **▶ Regolare le quote e le indicazioni di montaggio nella documentazione tecnica sui componenti presenti.**

Si consiglia di prelevare la valvola a sfera dall'imballaggio originale solo prima del montaggio. La valvola a sfera e la tubazione devono essere allineati, affinché il rubinetto sia libero da sollecitazioni meccaniche. Per l'installazione nel sistema di tubazione si devono osservare le norme di collegamento specifiche per incollaggi, saldature o avvitamenti. Ulteriori informazioni sono riportate nelle istruzioni per il funzionamento/l'incollaggio della macchina saldatrice e/o del produttore della colla. Le coppie di serraggio delle viti a flangia e altre informazioni sono riportate nei «**Fondamenti per la progettazione Georg Fischer**». L'installazione della valvola a sfera avviene come raffigurato nell'illustrazione **a – d.**
Collegare gli attacchi a seconda del vostro materiale e della vostra versione con le estremità dei tubi (saldare, incollare, avvitare, flangiare).

> Attenzione — **Le ghiere del tipo 546 si devono avvitare bene, senza l'impiego di utensili ausiliari.**
> L'uso di pinze o utensili ausiliari simili può danneggiare il materiale delle ghiere. Inoltre c'è il pericolo che forze di serraggio troppo forti danneggino il filetto.

L'azionamento di un rubinetto attiva forze di reazione nella tubazione collegata. Quindi si deve montare la valvola a sfera come punto fisso al suo fissaggio integrato/separato (se esistente) o fissare la corrispettiva tubazione direttamente prima e dopo la valvola a sfera mediante supporti idonei.

> Attenzione — **Se si usa il fissaggio integrato alla base del tipo 546, osservare le indicazione della profondità massima di fissaggio delle viti.**
> Un'inosservanza può causare danni alla custodia della valvola a sfera. Il carico di compressione di una custodia danneggiata può provocare la rottura.

Profondità di avvitamento max. nella valvola a sfera

DN	10/15	20/25	32/40	50
Vite	M6	M6	M8	M8
Prof.avv. H [mm]	12	12	15	15

> Attenzione — Nei sistemi di tubazione sottoposti a cambi di temperatura, in presenza di un ostacolo all'estensione termica si generano forze longitudinali e di flessione. Affinché queste forze non condizionino il funzionamento del rubinetto, devono essere assorbite mediante idonei punti fissi davanti e/o dietro il rubinetto.

Per il fissaggio del rubinetto davanti **+GF+** vi offre una piastra di fissaggio (30). Con questa piastra si assorbono le forze che possono generarsi azionando il rubinetto (p.e. coppia di scollamento). Con la piastra di fissaggio si evita una trasmissione delle forze di comando sul sistema di tubazione. Troverete ulteriori informazioni nel programma di fornitura attuale **+GF+**.

6 Prova di compressione

Per la prova di compressione delle valvole a sfera valgono le stesse indicazioni come per la tubazione. Informazioni dettagliate sono riportate nei «Fondamenti per la progettazione Georg Fischer» capitolo **Lavorazione e Posa**. Inoltre:

- controllare se tutti i rubinetti sono nella posizione di apertura o chiusura richiesta
- riempire il sistema di tubazione e sfiatare accuratamente

> Cautela — La prova di compressione di un rubinetto non deve superare **il valore** di **1.5 x PN, (max. però PN + 5 bar).** Il componente con il valore PN più basso determina la compressione di prova massima ammessa nella sezione di tubazione.

- Durante la prova di compressione controllare che la rubinetteria e i collegamenti sono a tenuta. Mettere a verbale i risultati.

7 Utilizzo previsto

Se il controllo sulla tenuta è stato effettuato con esito positivo, si può togliere la sostanza di prova. Ora si può procedere all'uso previsto dell'impianto.

8 Manutenzione – Riparazione

Nel funzionamento normale le valvole a sfera non necessitano di nessuna manutenzione. E' sufficiente verificare periodicamente che non ci sia fuoriuscita di sostanze. Nel caso di perdite o altri guasti, si devono assolutamente osservare i capitoli 1, 2 «Avvertenze di sicurezza, Avvisi di pericolo». Si consiglia di azionare 1–2 x all'anno le valvole a sfera che sono sempre nella stessa posizione per verificarne il funzionamento.
Nel caso di movimenti di controllo frequenti, p.e. mediante l'automatizzazione del rubinetto o a seguito di un attacco chimico sul materiale di tenuta, può essere necessario sostituire pezzi interni del rubinetto. A questo scopo il rubinetto deve essere smontato dal sistema di tubazione osservando gli «Avvisi di pericolo» del capitolo 2.

Simbolo di esplosione del rubinetto ad azionamento manuale:

1 Corpo
2 Blocco sfera
3 Attacco
4 Ghiera
5 Sfera
6 Albero
7 Tenuta sfera
8 Guarnizione d'appoggio
9 Guarnizione corpo
10 Guarnizione per attacchi
11 O-ring albero
12 Leva standard
13 Clip leva
14 Bussole filettate
22 Leva multifunzione
23 Anello distanziatore
24 Tasto di sblocco
25 Vite di fissaggio (Torx)
30 Piastra di fissaggio
31 Viti di fissaggio

Se la valvola a sfera è stato tolta dalla tubazione staccando le ghiere (4) e si può assicurare uno svuotamento dei residui, per lo smontaggio si devono eseguire i passi **e – i**:

! Per cortesia tenere presente che il blocco sfera (2) ha una filettatura sinistra.

Gli elementi di tenuta, come sfera, albero e blocco sfera possono essere sostituiti.
Georg Fischer offre a questo scopo corrispettivi kit di ricambio.

> Cautela — Nel caso di sostituzione si devono usare esclusivamente i pezzi di ricambio originali Georg Fischer previsti per il rubinetto. I pezzi di ricambio per il tipo 546 si possono ordinare con le indicazioni sulla targhetta di identificazione.

> Cautela — **Scelta dei lubrificanti**
> L'impiego di lubrificanti non idonei può attaccare il materiale della valvola a sfera o delle tenute. Per questa ragione non si devono assolutamente impiegare lubrificanti a base di olio minerale o vaselina (petrolatum).
> Per valvole a sfera senza perdite si devono osservare le avvertenze speciali del fabbricante.
> **▶ Tutte le guarnizioni devono essere lubrificate con grasso a base di silicone o policolo.**

> Cautela — **Maneggiare le guarnizioni**
> Tutte le guarnizioni (materiale p.e. EPDM, FPM) sono costituite da materiali organici. Esse reagiscono ai fattori ambientali e quindi devono essere conservate nel loro imballaggio originale, possibilmente al fresco, all'asciutto e al buio. Prima del montaggio si deve verificare che le guarnizioni non presentino danni di invecchiamento come crepe e indurimenti.
> **▶ Pezzi di ricambio danneggiati non devono essere usati.**

Nel **montaggio** dei singoli pezzi e nella sostituzione delle guarnizioni si devono eseguire i passi **k – s**:

! La coppia di serraggio del blocco sfera (2) deve essere scelta in modo che la sfera si possa ancora girare bene.

9 Montaggio e azionamento della leva MF

In alternativa alla leva standard per il tipo 546 si può utilizzare una leva multifunzione (MF) bloccabile e chiudibile.

Simbolo di esplosione della leva MF (v. figura piccola sopra)

Per il montaggio della leva MF si devono eseguire i passi **t – w**:

! Sul lato inferiore del gambo della leva si trova un anello distanziatore (23). Controllare che sia posizionato correttamente nel gambo (arresto).

Per l'uso della leva MF si devono eseguire i passi **x – y**.

x: Premere il tasto (24) per lo sblocco nella leva. Tenere il tasto in questa posizione. Ora la leva può essere girata di 90°.

y: La leva viene bloccata nella relativa posizione e può essere protetta da una chiusura contro persone non autorizzate.

a b c d e f g h i k l

m n o p q r s t u v w x y

10.29 - G2 – GOULDS SEWAGE PUMP

INSTRUCTION MANUAL
IM107

Wastewater Pumps
Dewatering, Effluent and Sewage

INSTALLATION, OPERATION AND MAINTENANCE INSTRUCTIONS

GOULDS
WATER TECHNOLOGY
a xylem brand

TABLE OF CONTENTS

SUBJECT	PAGE
Safety Instructions	3
Pre-Installation Checks	3
Lifting of Pump	3
Optional Guide Rail or Lift-Out System	3
Piping	4
Wiring and Grounding	4
Selecting and Wiring Pump Control Panels and Switches	4-5
Installation	5
Operation	5-6
Float Switch and Panel Chart	6
Three Phase Power Unbalance	7
Insulation Resistance Readings	7
Engineering Data	8
Troubleshooting	9
Typical Installations	10
Limited Warranty	11

Owner's Information

Pump Model Number: _____

Pump Serial Number: _____

Control Model Number: _____

Dealer: _____

Dealer Phone No. _____

Date of Purchase: _____ Installation: _____

Current Readings at Startup:

1Ø	3Ø	L1-2	L2-3	L3-1
Amps: _____	Amps: _____	_____	_____	_____
Volts: _____	Volts: _____	_____	_____	_____

SAFETY INSTRUCTIONS

TO AVOID SERIOUS OR FATAL PERSONAL INJURY OR MAJOR PROPERTY DAMAGE, READ AND FOLLOW ALL SAFETY INSTRUCTIONS IN MANUAL AND ON PUMP.

THIS MANUAL IS INTENDED TO ASSIST IN THE INSTALLATION AND OPERATION OF THIS UNIT AND MUST BE KEPT WITH THE PUMP.

This is a **SAFETY ALERT SYMBOL.** When you see this symbol on the pump or in the manual, look for one of the following signal words and be alert to the potential for personal injury or property damage.

⚠ DANGER Warns of hazards that **WILL** cause serious personal injury, death or major property damage.

⚠ WARNING Warns of hazards that **CAN** cause serious personal injury, death or major property damage.

⚠ CAUTION Warns of hazards that **CAN** cause personal injury or property damage.

NOTICE: INDICATES SPECIAL INSTRUCTIONS WHICH ARE VERY IMPORTANT AND MUST BE FOLLOWED.

THOROUGHLY REVIEW ALL INSTRUCTIONS AND WARNINGS PRIOR TO PERFORMING ANY WORK ON THIS PUMP.

MAINTAIN ALL SAFETY DECALS.

⚠ WARNING All electrical work must be performed by a qualified technician. Always follow the National Electrical Code (NEC), or the Canadian Electrical Code, as well as all local, state and provincial codes. Code questions should be directed to your local electrical inspector. Failure to follow electrical codes and OSHA safety standards may result in personal injury or equipment damage. Failure to follow manufacturer's installation instructions may result in electrical shock, fire hazard, personal injury or death, damaged equipment, provide unsatisfactory performance, and may void manufacturer's warranty.

⚠ WARNING Standard units are not designed for use in swimming pools, open bodies of water, hazardous liquids, or where flammable gases exist. These fluids and gases may be present in containment areas. Tank or wetwell must be vented per local codes.

Only pumps specifically Listed for Class 1, Division 1 are allowable in hazardous liquids and where flammable gases may exist. *See specific pump catalog bulletins or pump nameplate for all agency Listings*.

⚠ WARNING Disconnect and lockout electrical power before installing or servicing any electrical equipment. Many pumps are equipped with automatic thermal overload protection which may allow an overheated pump to restart unexpectedly.

⚠ CAUTION All three phase (3Ø) control panels for submersible pumps must provide Class 10, quick-trip, overload protection.

PRE-INSTALLATION CHECKS

Open all cartons and inspect for shipping damage. Report any damage to your supplier or shipping carrier immediately.

Important: Always verify that the pump nameplate Amps, Voltage, Phase and HP ratings match your control panel and power supply.

Many of our sewage pumps are oil-filled. If there are any signs of oil leakage or if the unit has been stored for an extended period check the oil level in the motor dome and the seal housing, if so equipped.

Check the motor cover oil level through the pipe plug on top of the unit. The motor chamber oil should just cover the motor. Do not overfill, leave room for expansion!

To check the seal housing oil level, where used, lay the unit on its side with the fill plug at 12 o'clock. Remove the plug. The oil should be within ½" (13mm) of the top. If low, refill with an ASTM 150 turbine oil. Replace the plug.

Oil is available in 5 gallon cans through our distributors. You can also source oil locally at motor repair shops. Typical oil brands are: Shell Turbo 32, Sunoco Sunvis 932, Texaco Regal R&O 32, Exxon Nuto 32 and Mobil DTE Light.

Check the strain relief nut on power cable strain assemblies. Power cables should be torqued to 75 in. lbs. for #16 cables and 80 in. lbs. for all other cable assemblies. Seal/heat sensor cables, where used, should be torqued to 75 in. lbs.

Warranty does not cover damage caused by connecting pumps and controls to an incorrect power source (voltage/phase supply).

Record the model numbers and serial numbers from the pumps and control panel on the front of this instruction manual for future reference. Give it to the owner or affix it to the control panel when finished with the installation.

LIFTING OF PUMP

DO NOT LIFT, CARRY OR HANG PUMP BY THE ELECTRICAL CABLES. DAMAGE TO THE ELECTRICAL CABLES CAN CAUSE SHOCK, BURNS OR DEATH.

Lift the pump with an adequately sized chain or cable attached to the lifting eye bolt. **DO NOT** damage electrical and sensor cables while raising and lowering unit.

OPTIONAL GUIDE RAIL OR LIFT-OUT SYSTEM

In many effluent and sewage basins or lift stations it is advisable to install the pump on a guide rail system or on a lift-out adapter to facilitate installation and removal for inspection and/or service. Most codes do not allow personnel to enter a wetwell without the correct protective equipment and training. Guide rails are designed to allow easy removal of the pump without the need for entry into the wetwell or need to disturb piping. The guide rail or lift-out adapter should locate the pump opposite the influent

opening preventing stagnate areas where solids can settle. The basin or pit must be capable of supporting the weight of the pump and guide rail. The pit floor must be flat.

NOTICE: FOLLOW THE INSTRUCTIONS THAT ARE PROVIDED WITH THE GUIDE RAIL ASSEMBLY.

PIPING

Discharge piping should be no smaller than the pump discharge diameter and kept as short as possible, avoiding unnecessary fittings to minimize friction losses.

Install an adequately sized check valve matched to the solids handling capability of the pump to prevent fluid backflow. Backflow can allow the pump to "turbine" backwards and may cause premature seal and/or bearing wear. If the pump is turning backwards when it is called on to start the increased torque may cause damage to the pump motor and/or motor shaft and some single-phase pumps may actually run backwards.

Install an adequately sized gate valve **AFTER** the check valve for pump, plumbing and check valve maintenance.

Important – Before pump installation. Drill a $\frac{3}{16}$" (4.8mm) relief hole in the discharge pipe. It should be located within the wetwell, 2" (51mm) above the pump discharge but below the check valve. The relief hole allows any air to escape from the casing. Allowing liquid into the casing will insure that the pump can start when the liquid level rises. Unless a relief hole is provided, a bottom intake pump could "air lock" and will not pump water even though the impeller turns.

All piping must be adequately supported, so as not to impart any piping strain or loads on the pump.

The pit access cover must be of sufficient size to allow for inspection, maintenance and crane or hoist service.

WIRING AND GROUNDING

Important notice: Read Safety Instructions before proceeding with any wiring.

⚠ Use only stranded copper wire to pump/motor and ground. The ground wire must be at least as large as the power supply wires. Wires should be color coded for ease of maintenance and troubleshooting.

⚠ Install wire and ground according to the National Electrical Code (NEC), or the Canadian Electrical Code, as well as all local, state and provincial codes.

⚠ Install an all leg disconnect switch where required by code.

⚠ Disconnect and lockout electrical power before performing any service or installation.

⚠ The electrical supply voltage and phase must match all equipment requirements. Incorrect voltage or phase can cause fire, motor and control damage, and voids the warranty.

⚠ All splices must be waterproof. If using splice kits follow manufacturer's instructions.

⚠ WARNING Select the correct type and NEMA grade junction box for the application and location. The junction box must insure dry, safe wiring connections.

⚠ WARNING Seal all controls from gases present which may damage electrical components.

⚠WARNING
Hazardous voltage

FAILURE TO PERMANENTLY GROUND THE PUMP, MOTOR AND CONTROLS BEFORE CONNECTING TO POWER CAN CAUSE SHOCK, BURNS OR DEATH.

SELECTING AND WIRING PUMP CONTROL PANELS AND SWITCHES

FLOAT SWITCH TYPES

There are two basic float switch designs; single-action and wide-angle. Single-action switches operate over a range of 15° so they open and close quickly. Wide-angle floats operate over a 90° swing with the tether length between the float body and the pivot point controlling the On-Off range. The design determines how many floats are required with different systems or controls.

Floats may be normally open (NO) for pump down applications or to empty a tank. Normally closed (NC) switches are used to pump up or to fill a tank.

A single-action control switch may be used only with a control panel, never direct connected to a pump.

The wide-angle, pump down switches may be used as direct connected pump switches or as control switches.

SETTING THE FLOAT SWITCHES

There are no absolute rules for where to set the float switches, it varies from job to job.

Suggested Rules to Follow:
All floats should be set below the Inlet pipe!

Off Float: Best: set so the water level is always above the top of the pump (motor dome). **Next Best:** set so the water level is not more than 6" below the top of the pump.

On Float: set so the volume of water between the On and Off floats allows pumps of 1½ HP and under to operate for 1 minute minimum. Two (2) HP and larger pumps should run a minimum of 2 minutes. Basin literature states the gallons of storage per inch of basin height.

Lag/Alarm Float(s): should be staggered above the Off and On floats. Try to use most of the available storage provided by the basin, save some space for reserve storage capacity. *See Diagrams and Charts in Float Switch Chart Section.*

PANEL WIRING DIAGRAMS

Our control panels are shipped with instructions and wiring diagrams. Use those instructions in conjunction with this IOM. Electrical installation should be performed only by qualified technicians. Any problem or questions pertaining to another brand control must be referred to that control supplier or manufacturer. Our technical people have no technical schematics or trouble shooting information for other companies' controls.

ALARMS

We recommend the installation of an alarm on all Wastewater pump installations. Many standard control panels come equipped with alarm circuits. If a control panel is not used, a stand alone high liquid level alarm is available. The alarm alerts the owner of a high liquid level in the system so they can contact the appropriate service personnel to investigate the situation.

SINGLE PHASE PUMPS
Single phase (1Ø) pumps may be operated using a piggyback or hard wired float switch, a contactor, or a Simplex or Duplex control panel. *See Figures 1, 2 and 5*.

All 1/3 and ½ HP, 115 or 230 volt pumps, and some ¾ and 1 HP pumps, are supplied with plug style power cords. They may be plugged into piggyback float switches for simple installations. It is allowable to remove the plugs in order to hardwire or connect to a Simplex or Duplex controller. Removing the plug neither voids the warranty nor violates the agency Listings. *See Figure 5*.

PLUG-CONNECTED UNITS MUST BE CONNECTED TO A PROPERLY GROUNDED, GROUNDING TYPE RECEPTACLE.

ON NON-PLUG UNITS, DO NOT REMOVE CORD AND STRAIN RELIEF. DO NOT CONNECT CONDUIT TO PUMP.

Pumps with bare lead power cords can be hard-wired to a float switch, wired to a 1Ø contactor, a Simplex controller or a Duplex controller. Always verify that the float switch is rated for the maximum run amperage, maximum starting amperage, and the HP rating on the pump. Single-phase wastewater pumps contain on-winding overloads, unless noted on the pump nameplate. *See Figures 1 and 2*.

THREE PHASE PUMPS:
As a Minimum a 3Ø pump requires a 3 pole circuit breaker/fused circuit, an across the line magnetic starter rated for the pump HP, and ambient compensated Quick Trip Class 10 overloads.

SINGLE AND THREE PHASE CONTROL PANELS:
Control panels are available as Simplex (controls 1 pump) or Duplex (controls 2 pumps). Our standard SES Series Panels are available with many standard features and can be built with our most popular options. We also custom build panels which offer many more design options than the SES panels. Custom control panels are available in many different configurations. Custom panel quote requests may be forwarded to Customer Service through any authorized distributor.

Our "SES" Duplex panels feature a solid-state printed circuit board design with standard high level alarm circuits. Other standard features are: an auxiliary dry alarm contact for signaling a remote alarm and float switch position indicator lights. Our 3Ø panels have built-in, adjustable, Class 10 overloads. The adjustable overloads on all our 3Ø panels mean less labor for the installer and no need to order specific overloads. Most SES panels are in stock for immediate delivery.

On pumps equipped with seal fail and/or heat (high temperature) sensors it is recommended that you use our control panel with the appropriate options. The pump sensors do not function without a seal fail relay or terminal connection in the control panel and a warning device such as a bell, horn or light.

Seal Failure Circuit - Some dual seal pumps are equipped with a standard, built-in seal failure circuit, which may also be called a moisture detection circuit. This circuit must be connected to a control panel with an optional seal fail relay. The panel must be special ordered with the seal fail relay and alarm. There are also stand alone seal fail panels such as the A4-3 or A4-4 available as standard items. The pumps can be identified by an extra control cable exiting the motor cover. The cable contains two wires, a black wire, connects to panel "terminal" going to "probe"; and a white wire, connects to the panel "terminal" going to the relay ground. Do not connect to the panel ground screw. Follow the wiring instructions supplied with the panel.

Heat Sensor and Seal Failure Circuit - Some pumps are equipped with a seal fail and normally closed, on-winding high temperature thermostats (heat sensors). The pumps have a control cable with five (5) leads, black (P1) and white (P2) for the seal fail circuit and red (W1) and orange (W2) for the high temperature circuit. Grean lead is ground. Connect the high temperature (heat sensor) circuit to the panel terminal strip as indicated on the panel drawing using the red and orange wires. The high temperature panel circuit is also an optional item which you must specifically order when you order your control panel. The high temperature circuit is different from the Class 10 overloads which are always required on three phase pumps. *Follow the wiring instructions supplied with the panel*.

*4NS NOTE: Call Technical support for wiring of 4NS/4XD/4XWS/4DWC/2GA/1GA/15GDS/20GDS.

INSTALLATION

Connect the pump(s) to the guide rail pump adapters or to the discharge piping. Slide rail bases should be anchored to the wetwell floor.

Complete all wiring per the control panel wiring diagrams and NEC, Canadian, state, provincial and/or local codes. This a good time to check for proper rotation of the motors/impellers.

DO NOT PLACE HANDS IN PUMP SUCTION WHILE CHECKING MOTOR ROTATION. TO DO SO WILL CAUSE SEVERE PERSONAL INJURY.

Always verify correct rotation. Correct rotation is indicated on the pump casing. Three phase motors are reversible. It is allowable to bump or jog the motor for a few seconds to check impeller rotation. It is easier to check rotation before installing the pump. Switch any two power leads to reverse rotation.

Lower the pump(s) into the wetwell.

Check to insure that the floats will operate freely and not contact the piping.

OPERATION

Once the piping connections are made and checked you can run the pumps.

Piggyback Switch Operation – Plug the piggyback switch into a dedicated grounded outlet and then plug the pump into the switch. Test the pump by filling the wetwell until the pump goes On. If the pumps run but fail to pump, they are probably air locked, drill the relief holes per the instructions in the Piping Section.

Check the operating range to insure a minimum one minute run time and that the pump goes Off in the correct position.

Control Panel Operation – Fill the wetwell with clear water.

Use the pump H-O-A (Hand-Off-Automatic) switches in Hand to test the pumps. If they operate well in Hand proceed to test Automatic operation. If the pumps run but fail to pump, they are probably air locked, drill the relief holes per the instructions in the Piping Section.

Place Control Panel switch(es) in Automatic position and thoroughly test the operation of the ON, OFF, and Alarm floats by filling the wetwell with clear water. **Important:** Failure to provide a Neutral from the power supply to a 1Ø, 230 volt Control Panel will not allow the panel control circuit to operate. The Neutral is necessary to complete the 115 volt control circuit.

Check voltage and amperage and record the data on the front of this manual for future reference. Compare the amperage readings to the pump nameplate maximum amperage. If higher than nameplate amperage investigate cause.

Operating the pump off the curve, i.e. with too little head or with high or low voltage will increase amperage. The motor will operate properly with voltage not more than 10% above or below pump nameplate ratings. Performance within this range will not necessarily be the same as the published performance at the exact rated nameplate frequency and voltage. Correct the problem before proceeding. Three phase unbalance is also a possible cause. *See Three Phase Power Unbalance and follow the instructions*.

Reset the Alarm circuit, place pump switch(es) in the Automatic position and Control Switch in ON position. The system is now ready for automatic operation.

Explain the operation of the pumps, controls and alarms to the end user. Leave the paperwork with the owner or at the control panel if in a dry, secure location.

FLOAT SWITCH AND PANEL CHART

The purpose of this chart is to show the required switch quantities and the function of each switch in a typical wastewater system. The quantities required vary depending on the switch type, single-action or wide-angle. Switch quantities also vary by panel type: simplex with and without alarms, and duplex with alarms.

Duplex Panels using single-action switches:

Three Float Panel Wiring

SW1	Bottom	Pumps Off
SW2	Middle	1st Pump On
SW3	Top	2nd Pump & Alarm On

Four Float Panel Wiring ②

SW1	Bottom	Pumps Off
SW2	2nd	1st Pump On
SW3	3rd	2nd Pump On
SW4	Top	Alarm On

Duplex Panels using wide-angle switches:

Three Float Panel Wiring

SW1	Bottom	1st Pump On/Both Off
SW2	Top	2nd Pump & Alarm On

Four Float Panel Wiring

SW1	Bottom	1st Pump On/Both Off
SW2	Middle	2nd Pump On
SW3	Top	Alarm On

Simplex Panel using single-action switches:

Simplex Panel with Alarm ①

SW1	Bottom	Pump Off
SW2	Middle	Pump On
	SW3	Top Alarm On/Off

Simplex Panel with No Alarm

SW1	Bottom	Pump Off
SW2	Top	Pump On

Simplex Panel using wide-angle switches:

Simplex Panel with Alarm

SW1	Bottom	Pump On/Off
SW2	Top	Alarm On/Off

Simplex Panel with No Alarm

SW1	Pump On/Off

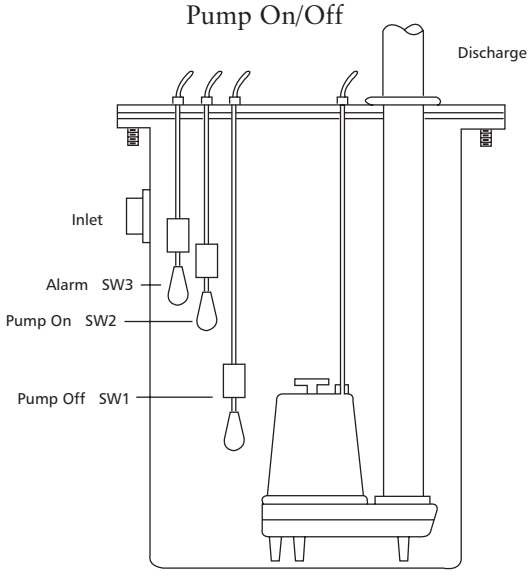

Simplex ①

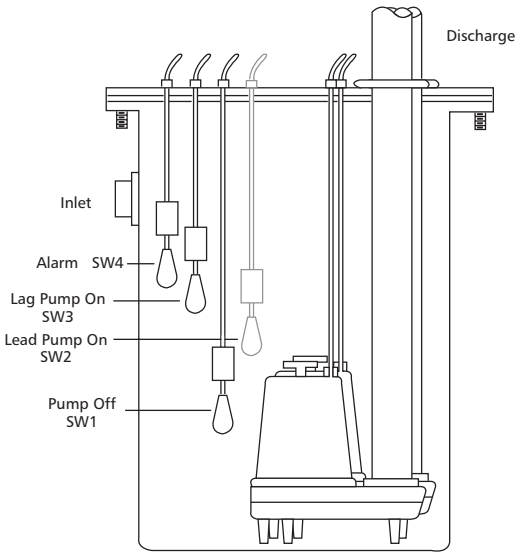

Duplex ②

THREE PHASE POWER UNBALANCE

A full three phase supply consisting of three individual transformers or one three phase transformer is recommended. "Open" delta or wye connections using only two transformers can be used, but are more likely to cause poor performance, overload tripping or early motor failure due to current unbalance.

Check the current in each of the three motor leads and calculate the current unbalance as explained below.

If the current unbalance is 2% or less, leave the leads as connected.

If the current unbalance is more than 2%, current readings should be checked on each leg using each of the three possible hook-ups. Roll the motor leads across the starter in the same direction to prevent motor reversal.

To calculate percent of current unbalance:

A. Add the three line amp values together.

B. Divide the sum by three, yielding average current.

C. Pick the amp value which is furthest from the average current (either high or low).

D. Determine the difference between this amp value (furthest from average) and the average.

E. Divide the difference by the average. Multiply the result by 100 to determine percent of unbalance.

Current unbalance should not exceed 5% at service factor load or 10% at rated input load. If the unbalance cannot be corrected by rolling leads, the source of the unbalance must be located and corrected. If, on the three possible hookups, the leg farthest from the average stays on the same power lead, most of the unbalance is coming from the power source.

Contact your local power company to resolve the imbalance.

	Hookup 1			Hookup 2			Hookup 3		
Starter Terminals	L1	L2	L3	L1	L2	L3	L1	L2	L3
	⊥ T	⊥ T	⊥ T	⊥ T	⊥ T	⊥ T	⊥ T	⊥ T	⊥ T
Motor Leads	R	B	W	W	R	B	B	W	R
	T3	T1	T2	T2	T3	T1	T1	T2	T3

Example:

T3-R = 51 amps	T2-W = 50 amps	T1-B = 50 amps
T1-B = 46 amps	T3-R = 48 amps	T2-W = 49 amps
T2-W = 53 amps	T1-B = 52 amps	T3-R = 51 amps
Total = 150 amps	Total = 150 amps	Total = 150 amps
÷ 3 = 50 amps	÷ 3 = 50 amps	÷ 3 = 50 amps
– 46 = 4 amps	– 48 = 2 amps	– 49 = 1 amps
4 ÷ 50 = .08 or 8%	2 ÷ 50 = .04 or 4%	1 ÷ 50 = .02 or 2%

INSULATION RESISTANCE READINGS

Normal Ohm and Megohm Values between all leads and ground

Condition of Motor and Leads	Ohm Value	Megohm Value
A new motor (without drop cable).	20,000,000 (or more)	20 (or more)
A used motor which can be reinstalled in well.	10,000,000 (or more)	10 (or more)
Motor in well. Readings are for drop cable plus		
New motor.	2,000,000 (or more)	2 (or more)
Motor in good condition.	500,000 - 2,000,000	.5 - 2
Insulation damage, locate and repair.	Less than 500,000	Less than .5

Insulation resistance varies very little with rating. Motors of all HP, voltage and phase ratings have similar values of insulation resistance.

Insulation resistance values above are based on readings taken with a megohmmeter with a 500V DC output. Readings may vary using a lower voltage ohmmeter, consult factory if readings are in question.

Engineering data for specific models may be found in your catalog and on our website (address is on the cover).

Control panel wiring diagrams are shipped with the control panels. Please use the control panel drawings in conjunction with this instruction manual to complete the wiring.

PUMP OPERATION			
Minimum Submergence		**Maximum Fluid Temperature**	
Continuous Duty	Fully Submerged	Continuous Operation	104° F 40° C
Intermittent Duty	6" Below Top of Motor	Intermittent Operation	140° F 60° C

Pumpmaster and Pumpmaster Plus - Hard Wired

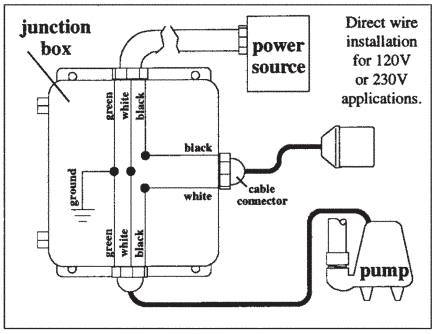

Figure 1

Single-Action Float Switch "Typical" Installation

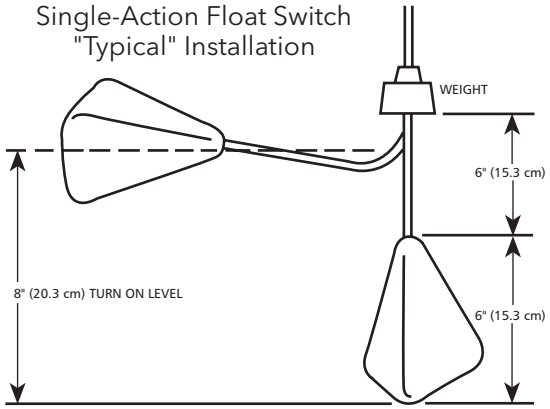

Figure 4

Double Float - Hard Wired

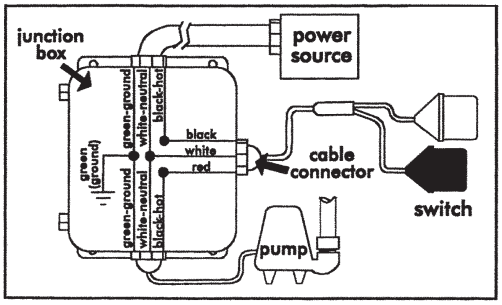

Figure 2

Wide-Angle Float Switch

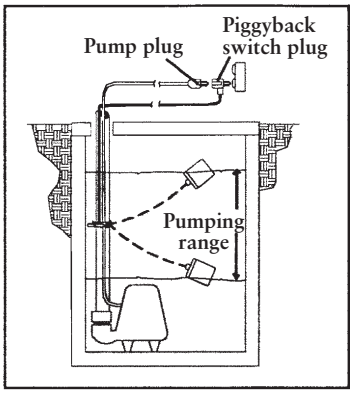

Figure 5

Determining Pumping Range

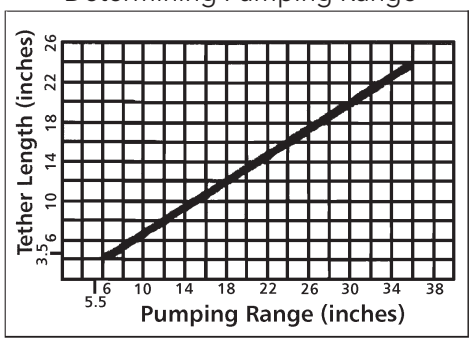

Figure 3

Three Phase Connection Diagram

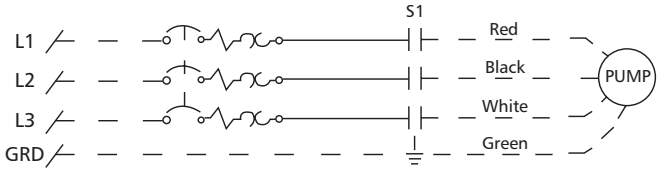

Figure 6

⚠WARNING
Hazardous voltage

FAILURE TO DISCONNECT AND LOCKOUT ELECTRICAL POWER BEFORE ATTEMPTING ANY SERVICE CAN CAUSE SHOCK, BURNS OR DEATH.

SYMPTOM	PROBABLE CAUSE	RECOMMENDED ACTION
MOTOR NOT RUNNING	Motor thermal protector tripped.	Allow motor to cool. Insure minimum pump submergence. Clear debris from casing and impeller.
NOTE: If circuit breaker "OPENS" repeatedly, **DO NOT** reset. Call qualified electrician.	Open circuit breaker or blown fuse.	Determine cause, call a qualified electrician.
	Pump impeller binding or jammed.	Check motor amp draw. If two or more times higher than listed on pump nameplate, impeller is locked, motor bearings or shaft is damaged. Clear debris from casing and impeller, consult with dealer.
a) Manual operation	Power cable is damaged.	
	Inadequate electrical connection in control panel.	
b) Automatic operation	No neutral wire connected to control panel.	Resistance between power leads and ground should read infinity. If any reading is incorrect, call a qualified electrician.
	Inadequate electrical connection in control panel.	Inspect control panel wiring. Call a qualified electrician.
NOTE: Check the pump in manual mode first to confirm operation. If pump operates, the automatic control or wiring is at fault. If pump does not operate, see above.	Defective liquid level switch.	With switch disconnected, check continuity while activating liquid level switch. Replace switch, as required.
	Insufficient liquid level to activate controls.	Allow liquid level to rise 3" to 4" (76 mm - 101 mm) above turn-on level.
	Liquid level cords tangled.	Untangle cords and insure free operation.
PUMP WILL NOT TURN OFF	Liquid level cords tangled.	Untangle cords and insure free operation.
	Pump is air locked.	Shut off pump for approximately one minute, then restart. Repeat until air lock clears. If air locking persists in a system with a check valve, a $\frac{3}{16}$" (4.8 mm) hole may be drilled in the discharge pipe approximately 2" (51 mm) above the discharge connection.
	Influent flow is matching pump's discharge capacity.	Larger pump may be required.
LITTLE OR NO LIQUID DELIVERED BY PUMP	Check valve installed backwards, plugged or stuck closed.	Check flow arrow on valve and check valve operation.
	Excessive system head.	Consult with dealer.
	Pump inlet plugged.	Inspect and clear as required.
	Improper voltage or wired incorrectly.	Check pump rotation, voltage and wiring. Consult with qualified electrician.
	Pump is air locked.	See recommended action, above.
	Impeller is worn or damaged.	Inspect impeller, replace as required.
	Liquid level controls defective or improperly positioned.	Inspect, readjust or replace as required.
PUMP CYCLES CONSTANTLY	Discharge check valve inoperative.	Inspect, repair or replace as required.
	Sewage containment area too small.	Consult with dealer.
	Liquid level controls defective or improperly positioned.	Inspect, readjust or replace as required.
	Influent excessive for this size pump.	Consult with dealer.

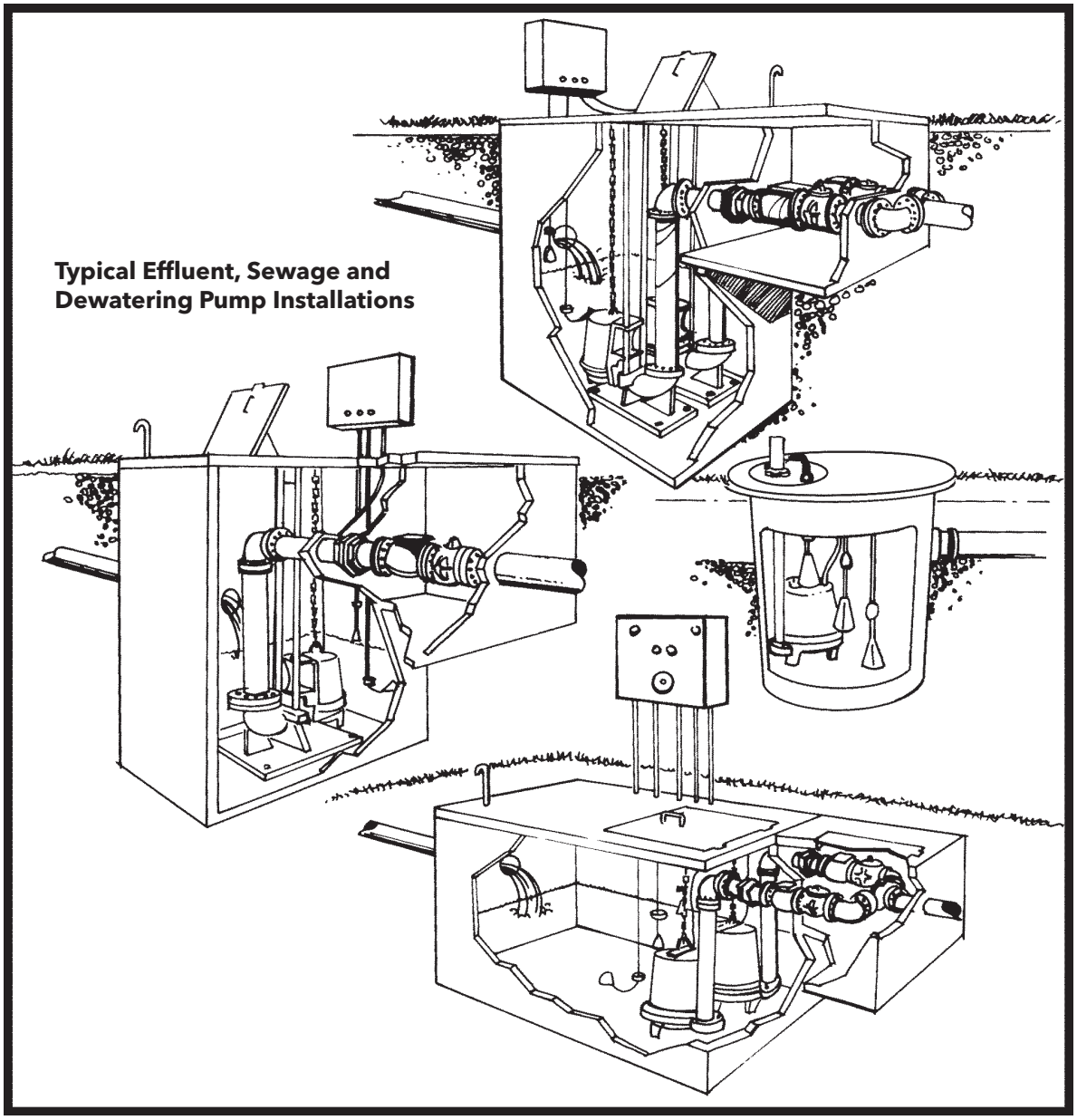
Typical Effluent, Sewage and
Dewatering Pump Installations

GOULDS WATER TECHNOLOGY LIMITED WARRANTY

This warranty applies to all water systems pumps manufactured by Goulds Water Technology.

Any part or parts found to be defective within the warranty period shall be replaced at no charge to the dealer during the warranty period. The warranty period shall exist for a period of twelve (12) months from date of installation or eighteen (18) months from date of manufacture, whichever period is shorter.

A dealer who believes that a warranty claim exists must contact the authorized Goulds Water Technology distributor from whom the pump was purchased and furnish complete details regarding the claim. The distributor is authorized to adjust any warranty claims utilizing the Goulds Water Technology Customer Service Department.

The warranty excludes:

(a) Labor, transportation and related costs incurred by the dealer;
(b) Reinstallation costs of repaired equipment;
(c) Reinstallation costs of replacement equipment;
(d) Consequential damages of any kind; and,
(e) Reimbursement for loss caused by interruption of service.

For purposes of this warranty, the following terms have these definitions:

(1) "Distributor" means any individual, partnership, corporation, association, or other legal relationship that stands between Goulds Water Technology and the dealer in purchases, consignments or contracts for sale of the subject pumps.
(2) "Dealer" means any individual, partnership, corporation, association, or other legal relationship which engages in the business of selling or leasing pumps to customers.
(3) "Customer" means any entity who buys or leases the subject pumps from a dealer. The "customer" may mean an individual, partnership, corporation, limited liability company, association or other legal entity which may engage in any type of business.

THIS WARRANTY EXTENDS TO THE DEALER ONLY.

xylem
Let's Solve Water

Xylem, Inc.
2881 East Bayard Street Ext., Suite A
Seneca Falls, NY 13148
Phone: (866) 325-4210
Fax: (888) 322-5877
www.xyleminc.com/brands/goulds watertechnology

Goulds is a registered trademark of Goulds Pumps, Inc. and is used under license.
© 2012 Xylem Inc. IM107 Revision Number 4 July 2012

10.30 - H1 – HYDRANAUTICS SUMERGED MEMBRANES

Operation of a Submerged Hollow Fiber Membrane Bioreactor for Wastewater Treatment on Meeting Reclamation Criteria

Benjamin Freeman[1], Naomi Jones[1], Craig Bartels[1], Shinya Sunano[2], Takanori Itonaga[3]
1. Hydranautics/Nitto Denko, 401 Jones Rd., Oceanside, CA 92058 USA
2. Hydranautics/Nitto Denko, 82 Toh Guan Road East, #C2-12,
WATERHUB Singapore 608576
3. Mitsubishi Rayon Engineering, 4-1-2 Ushikawa-dohri, Toyohashi, Aichi 440-8601,
Japan

ABSTRACT

Title 22 of the California Health and Safety Code of Regulations establishes the criteria for water quality and treatment reliability related to use of reclaimed water. Hydranautics/Mitsubishi Rayon Engineering conducted a pilot study to verify that the filtrate of the HYDRAsub®/Sterapore SADF®-MBR meets the Title 22 criteria (no higher than 0.2 NTU more than 5% of the time within a 24-hour period and 0.5 NTU at any time) under average and peak fluxes. This study was also conducted to benchmark the virus removal by the HYDRAsub®-MBR and to minimize capital and operating cost through optimization of average and peak fluxes.

INTRODUCTION

The California Department of Public Health (CDPH) has established specific criteria for water quality standards and treatment reliability related to the use of reclaimed water in Title 22 of the California Health and Safety Code of Regulations. *§60301.320* of Title 22 of the California Health and Safety Code of Regulations requires that wastewater that has been passed through a microfiltration, ultrafiltration, nanofiltration, or reverse osmosis membrane should have filtrate turbidity that does not exceed 0.2 NTU more than 5 percent of the time within a 24-hour period and 0.5 NTU at any time. All membrane filters which are to be used for domestic wastewater reclamation must first be approved by the CDPH. To gain approval, the CDPH requires that a pilot study be conducted to verify that filtrate in accordance with the above Title 22 requirements.

In addition to the turbidity requirements described above, Title 22 states that reclaimed wastewater that uses a disinfection process other than chlorination must achieve 5-log polio virus or MS2 inactivation/removal when combined with a filtration process. The test is also used to benchmark the level of virus removal to determine the amount of further disinfection required.

From February 2009 to May 2009, Hydranautics and Mitsubishi Rayon Engineering (MRE), along with the help of HDR Engineering, executed a CDPH approved pilot study protocol to verify that Hydranautics' HYDRAsub-MBR® membrane, also known as MRE's Sterapore-SADF®, is capable of meeting the Title 22 requirements for membrane filtered wastewater reuse. The membrane will be referred to as HYDRAsub®/Sterapore-

SADF® for the remainder of this document. The pilot study was conducted at the South Orange County Wastewater Authority's (SOCWA) Plant 3A, located in Laguna Niguel.

MATERIALS AND METHODS

Feed Water Quality

For the duration of the pilot study, the feed water to the pilot system was effluent from the primary clarifier at the South Orange County Wastewater Authority's (SOCWA) Plant 3A. As described in more detail below, primary clarifier effluent was screened before entering the anoxic tank of the MBR pilot system. Screened primary clarifier effluent shall be referred to as MBR influent for the remainder of this document. Water quality for the MBR influent is given in Table 1.

Table 1: MBR Influent Water Quality

Parameter	Units	Number of Analyses	Median	Minimum	Maximum
TKN	mg/L-N	21	66	55	130
Ammonia - N	mg/L-N	21	49	37	100
Nitrate - N	mg/L-N	11	ND[1]	ND[1]	0.19
Nitrite - N	mg/L-N	11	ND[2]	ND[2]	0.37
BOD_5	mg/L	5	140	120	190
COD	mg/L	19	320	53	440
TSS	mg/L	19	62	42	100

1. Method detection limit (MDL) for nitrate is 0.11 mg/L; nine of 11 samples were non-detect (ND).
2. MDL for nitrite is 0.15 mg/L; nine of 11 samples were ND.

Pilot Unit Description

The MBR pilot system used during testing was designed by Hydranautics, MRE, and HDR to test the HYDRAsub-MBR®/Sterapore SADF® membranes. Because requirements for nitrogen removal from wastewater are becoming common, the pilot system design was based on the Modified Ludzack-Ettinger (MLE) process for nitrogen removal, as shown in Figure 1. Figure 2 shows the actual arrangement of the pilot system.

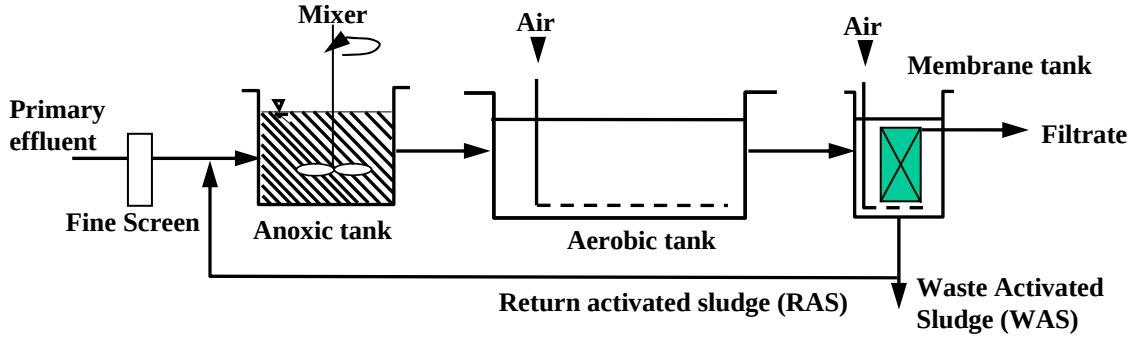

Figure 1: HYDRAsub®/Sterapore SADF® Title 22 Certification Pilot System Process Flow Diagram

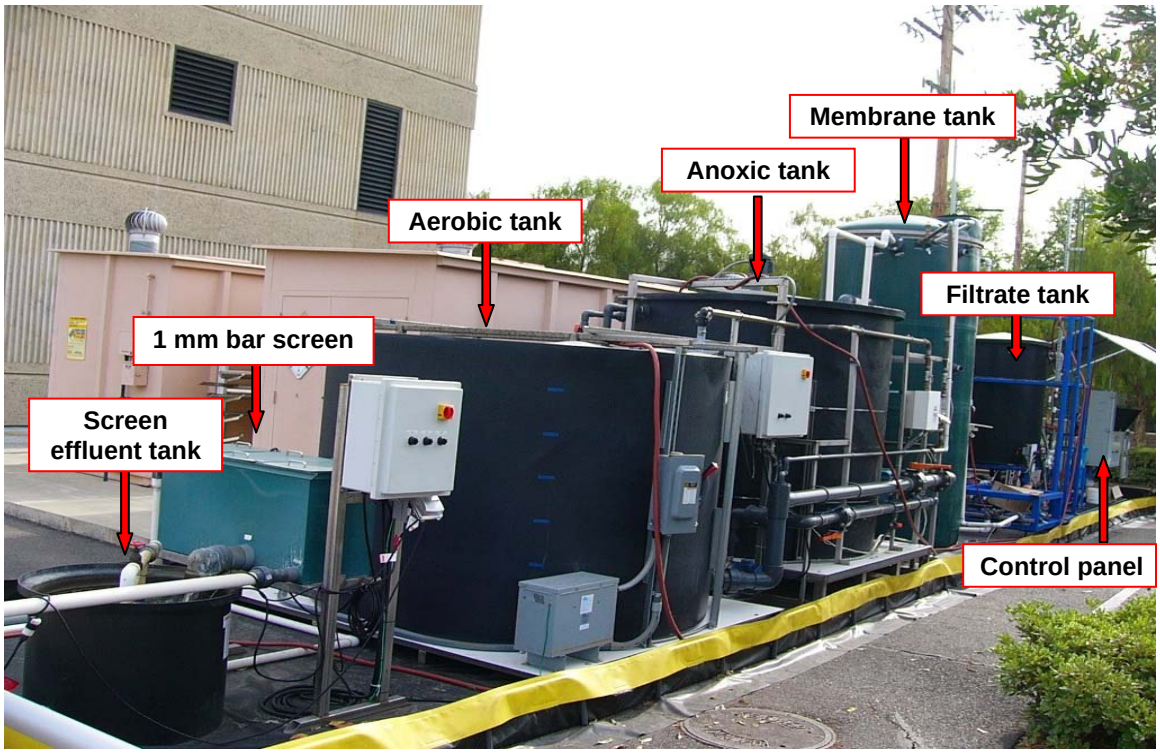

Figure 2: HYDRAsub®/Sterapore SADF® MBR Title 22 Certification Pilot System

Throughout testing, large particles and fibrous materials, which could damage the membranes, were removed from the primary clarified effluent by a self cleaning bar screen with 1 mm openings, which is shown in Figure 2.

The bar screen effluent was then collected in a 150 gallon tank and pumped to the anoxic tank. As shown in Figure 3, the anoxic tank was equipped with a top entry mixer to keep the suspended solids well mixed.

Figure 3: Anoxic Tank

As shown in Figure 1, MBR influent was combined with return activated sludge (RAS) in the anoxic tank. Following anoxic treatment, activated sludge, or mixed liquor, then overflowed to the aerobic tank (shown in Figure 4) where oxygen was supplied via fine bubble diffusers.

Figure 4: Aerobic Tank

Following aerobic treatment, the mixed liquor was pumped to the membrane tank. As previously mentioned, the membrane in an MBR is used for solid-liquid separation. The membrane filtrate was collected in a 400 gallon tank. The separated suspended solids

remained in the mixed liquor and continued to recirculate throughout the system, overflowing from the membrane tank to the anoxic tank.

The key tank volumes and hydraulic retention times are summarized in Table 2.

Table 2: HYDRAsub®/Sterapore SADF® MBR Title 22 Certification Pilot Tank Summary

	Aerobic tank	Anoxic tank	Membrane tank	Total
Volume, m^3 (gal)	1750	1300	1900	4950
HRT at design flow, hr	3.0	2.2	3.3	8.6
HRT at peak flow, hr	2.0	1.5	2.2	5.6

HYDRAsub®/Sterapore SADF®-MBR Process Description

Operating Sequence

HYDRAsub®/Sterapore SADF®- MBR membranes are vertically oriented, outside-in, hollow fiber, PVDF, submerged microfiltration membranes. During filtration, a suction pressure is applied to the filtrate side (the inside) of the membrane fibers. The suction pressure is usually created through the use of a self-priming centrifugal pump. The suction pressure pulls water to the inside of the fibers, leaving particulate matter on the feed side (the outside) of the fiber. As solids accumulate on the feed side of the membrane fibers and in the membrane pores, more suction pressure is required to maintain a constant flow rate. The difference between the pressure on the feed side of the membrane and the filtrate side of the membrane is called the transmembrane pressure, or TMP. The TMP is the primary measure of membrane fouling. To maintain low TMP and prevent solids accumulation on the feed side of the membrane fibers, air is continuously supplied to a coarse bubble air diffuser located below the membranes. Coarse bubbles, generated by the diffuser, rise through the membrane fiber bundles, creating a scouring effect which limits the amount of solids deposition on the outer membrane surface and pore plugging, thereby helping to maintain a low TMP.

After a set amount of filtration time, the membranes enter a relaxation step, or soak step. During the relaxation step, filtration stops while coarse air bubbles continue to create a scouring effect to remove extraneous particulate matter from the feed side of the membrane which may have been accumulated during filtration.

Over time, some accumulated particulate matter (or foulants) on the membrane and in the pores may not be removed by the relaxation step. To remove this portion of foulants, a weekly chemically enhanced backwash is utilized. During the chemically enhanced backwash, aeration stops, then a low concentration of chlorine solution is injected to the filtrate side of the membranes at a low flux for a set amount of time. The chlorinated solution soaks in the membrane fibers and pores, breaking down any foulants that were not removed by normal aeration. Following the injection period, aeration is restarted, which removes the accumulated foulants. Normal operation resumes after a short aeration period.

HYDRAsub®/Sterapore SADF®-MBR Module and Element Description

For this pilot study, a specially designed HYDRAsub®/Sterapore SADF® module with a total active membrane area of 75 m^2 (HSM75) was used. A HYDRAsub®/Sterapore SADF® module is comprised of the membrane elements, coarse air diffuser, filtrate adapters and supporting cage. Figure 5 shows the standard HYDRAsub®/Sterapore SADF® module, which is referred to as a HSM500. The main difference between the HSM75 and HSM500 is the number of elements. The HSM500 has twenty HYDRAsub Element-25 m^2 (HSE25), while the HSM75 has only three. Figure 5 also displays the HSE25. Filtrate is drawn through both ends of the large diameter supported PVDF hollow fiber membranes, which are soft potted in the HSE25.

Figure 5: HYDRAsub Module - 500 m^2 (HSM500), left. HYDRAsub Element – 25 m^2 (HSE25), right.

Analytical Methods

On-site Analysis

The pilot unit was equipped with a PLC and HMI to automate the operating sequences described above and to collect operating data. The HMI automatically recorded the following data:

Table 3: Automatically Recorded Data

Parameter	Instrumentation Type	Location	Frequency
Temperature	GF Signet 2350 Temperature Sensor	Filtrate pipe	1 data point/5 minutes
Filtrate flow rate	GF Signet 515 Rotor-X Flow Sensor		
Filtrate pressure	Parker MPS-3 Pressure Sensor		
Wasted sludge flow rate	GF Signet 515 Rotor-X Flow Sensor		
Filtrate turbidity	Hach 1720E Low Range Turbidimeter		

As described in the introduction, the key parameter for Title 22 approval is the filtrate turbidity. To ensure the accuracy of the filtrate turbidity readings, the Hach 1720E Low Range Turbidimeter was calibrated according to the manufacturer's 2-point calibration protocol at the beginning of the testing period and again after three months of operation, which is more frequently than specified by the manufacturer.

Automatically recorded data was downloaded from the HMI and analyzed. Flux can be calculated according to Equation 1. TMP can be calculated according to Equation 2.

$$J_{\text{filtrate}} = \left(\frac{\frac{L_{filtrate}}{hour}}{m^2_{\text{active membrane filtration area}}} \right)$$

Equation 1

$$P_{TMP} = P_{gauge} + \Delta P_{height}$$

Where,

ΔP_{height} = altitude difference between the location of the pressure gauge and the average water level in the membrane tank, in terms of pressure.

Equation 2

In addition to automatically recorded data, Hydranautics and MRE staff manually collected data with handheld instruments to verify the accuracy of the instrumentation.

Off-site Analysis

HDR arranged for samples of the MBR influent and effluent to be analyzed by an outside laboratory, Test America. Test America measured the COD, BOD, TSS, TKN, and NH4 of samples collected from the MBR influent and effluent.

Hydranautics and MRE staff also regularly measured the MLSS and MLVSS according to the Standard Methods 2540D and 2540E, respectively(APHA, 1998).

Virus Testing

To benchmark the virus removal capability of the HYDRAsub®/Sterapore SADF® MBR membranes, influent and effluent concentrations of a virus surrogate, MS2 bacteriophage, were measured at three different fluxes: 33.1 LMH for 24 hours, 50.1 LMH for 4 hours, and 45.4 LMH. In all tests, the procedure was the same. The virus surrogate, MS2 bacteriophage, was seeded to the aerobic tank. At the same time, filtration was stopped. The sludge was then circulated from the aerobic tank to the anoxic tank and back to the aerobic tank for 16 hours, bypassing the membrane tank. This was done to allow the virus concentration to reach equilibrium in the system before starting filtration. Following the equilibration, filtration resumed at the above fluxes.

RESULTS

HYDRAsub®/Sterapore SADF® MBR Membrane Performance Results

Flux and TMP

From the beginning of March 2009 to the end of April 2009, the official Title 22 testing was conducted. Prior to this time, there was a startup period in which the mixed liquor suspended solids (MLSS) was built up to the optimal range. Figure 6 shows the main membrane performance operating parameters: flux, TMP, and water temperature.

From March 3rd to April 13th, the HYDRAsub®/Sterapore SADF® MBR membranes were operated at an instantaneous flux of 33.1 LMH (19.6 gfd). At this flux, the TMP averaged 10.1 kPa, with a range of 2 and 15 kPa. Daily fluctuations in the TMP were most likely a result of changes in the temperature. As the temperature increased, the viscosity of the sludge decreased, so the pressure required to pull filtrate through the membranes (or TMP) decreased. The opposite was true as the sludge temperature decreased. Although there is a clear correlation between the TMP and the sludge temperature, the data presented in Figure 6 has not been temperature corrected. As temperature changes in the activated sludge, not only the viscosity changes; biological processes also change. Therefore, it is inappropriate to put a viscosity based temperature correction on the data. Due to the stable TMP observed at 33.1 LMH, Hydranautics and MRE staff decided to operate at an increased filtrate flux of 38.0 LMH (22.5 gfd) from April 13th to April 28th. At this flux, an average TMP of 12.3 kPa was observed, with a range of 5 kPa to 16 kPa. As previously mentioned in the operating procedure, the TMP

is the main measure of membrane fouling. Therefore, the stability of the TMP indicates a low level of membrane fouling.

Figure 6 also reflects 4 hour peak flux and 24 hour high flux tests, which were required by the CDPH as a part of the Title 22 certification testing protocol. The peaking tests are designed to ensure that in real applications, where the influent flow rate to a wastewater treatment plant varies throughout the day and week, the filtrate turbidity can still meet Title 22 requirements. The ten green circles represent the flux and corresponding TMP during five separate 4 hours peak flux tests at an instantaneous flux of 50.1 LMH (30 gfd). The average TMP at this flux was 18.6 kPa. This makes sense because more suction pressure is required to pull more water through the membrane. Immediately following the peak flux tests at 50.1 LMH, when the flux is reset to 33.1 LMH, the TMP returns to about 10 kPa, which indicates that the membrane did not suffer irreversible fouling during peak flux testing at 50.1 LMH. Because no irreversible fouling occurred at 50.1 LMH, Hydranautics and MRE staff decided to operate the final two peak flux tests at an increased instantaneous flux of 67.6 LMH (40 gfd). The average TMP at this flux was 30.3 kPa. When the flux was reset to 38.0 LMH, the TMP returned to 12-13 kPa, which was close to the average TMP at this flux. Therefore, 4 hour peak flux tests at 67.6 LMH did not result in irreversible fouling. The orange circles in Figure 6 reflect the first 24 hour high flux test. The flux was set to 41.4 LMH (24.5 gfd) and the corresponding average TMP was 13.8 kPa. After the first high flux test, the flux was reset to 33.1 LMH and the TMP returned to about 10 kPa. The second high flux test is indicated by the gray circles on Figure 6. Because of favorable results in the first high flux test, the second 24 hour high flux test was conducted at 45.4 LMH (26.9 gfd). The average TMP at this flux was 17.5 kPa. Before and after 24 hours of operation at 45.4 LMH, the flux was 38.0 LMH and the TMP was between 12-14 kPa, which once again indicated that no irreversible fouling occurred during the 24 hour high flux test. The stability of the TMP after all peak and high flux tests proved that HYDRAsub®/Sterapore SADF® MBR membranes are capable of handling the influent flow variations experienced at domestic wastewater treatment plants.

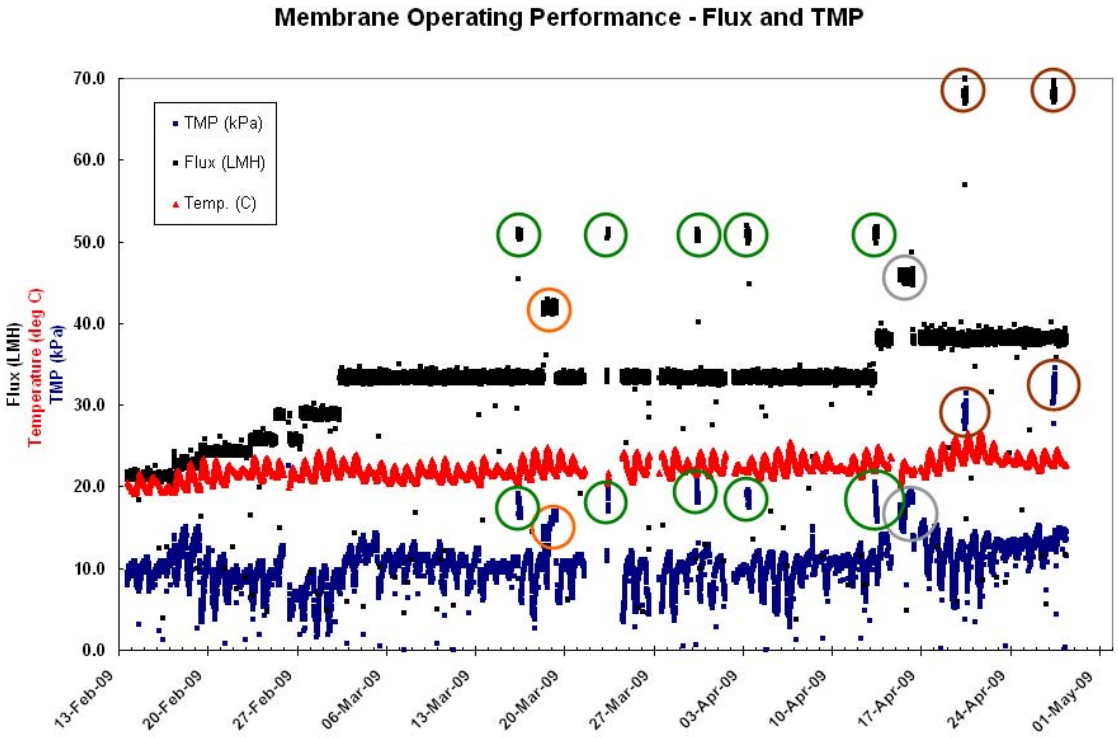

Figure 6: Flux, TMP, and Sludge Temperature

Filtrate Turbidity

Figure 7 shows the HYDRAsub®/Sterapore SADF® filtrate turbidity throughout the testing period. The black dotted line is at 0.2 NTU and the solid red line is at 0.5 NTU. As described above, Title 22 states that the turbidity of the filtered wastewater should not exceed 0.2 NTU more than 5 percent of the time within a 24-hour period and 0.5 NTU at any time. The average filtrate turbidity was 0.07 NTU, and the maximum was 0.410 NTU on April 14th. As the graph shows, the filtrate turbidity never exceeded 0.5 NTU, and only exceeded 0.2 NTU on five separate occasions. As was previously mentioned, the filtrate turbidity was recorded every 5 minutes for the test duration, with the exception of several data logging failures which occurred on March 21st, 23rd, 26th, and April 7th and 8th. The statistical analysis displayed in Figure 8 indicates that the filtrate turbidity that was below 0.2 NTU 99.9% of the time. Therefore, HYDRAsub®/Sterapore SADF® MBR membranes easily met the Title 22 requirement for membrane filtration.

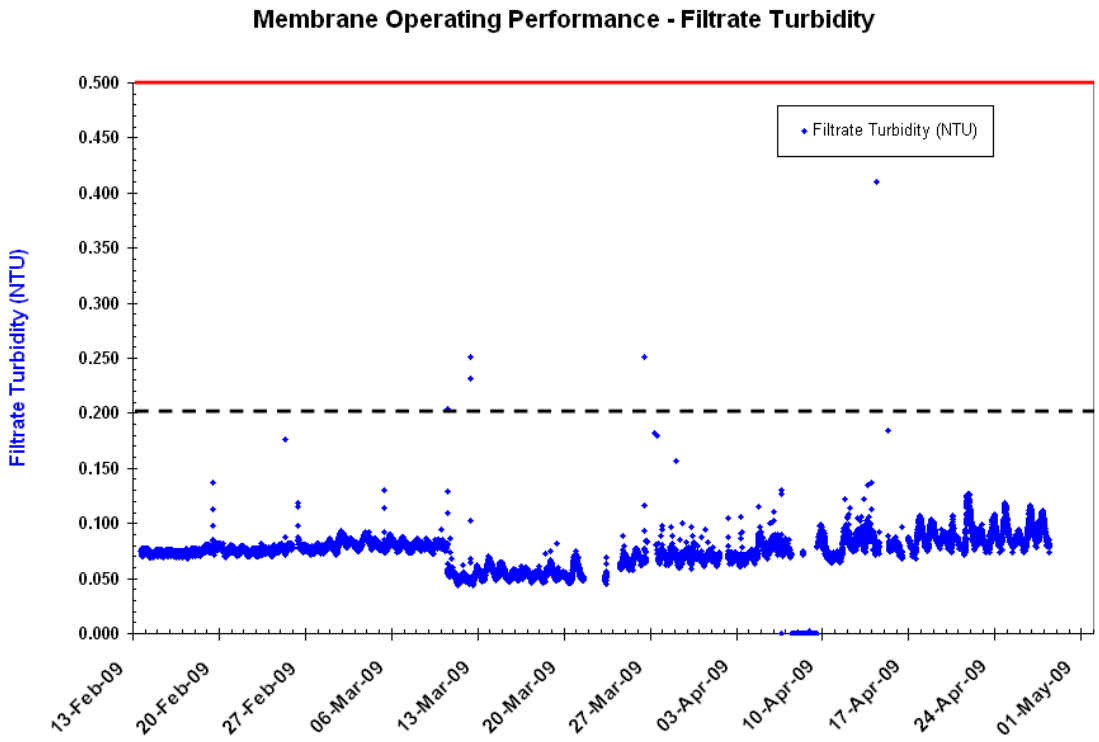

Figure 7: Filtrate Turbidity

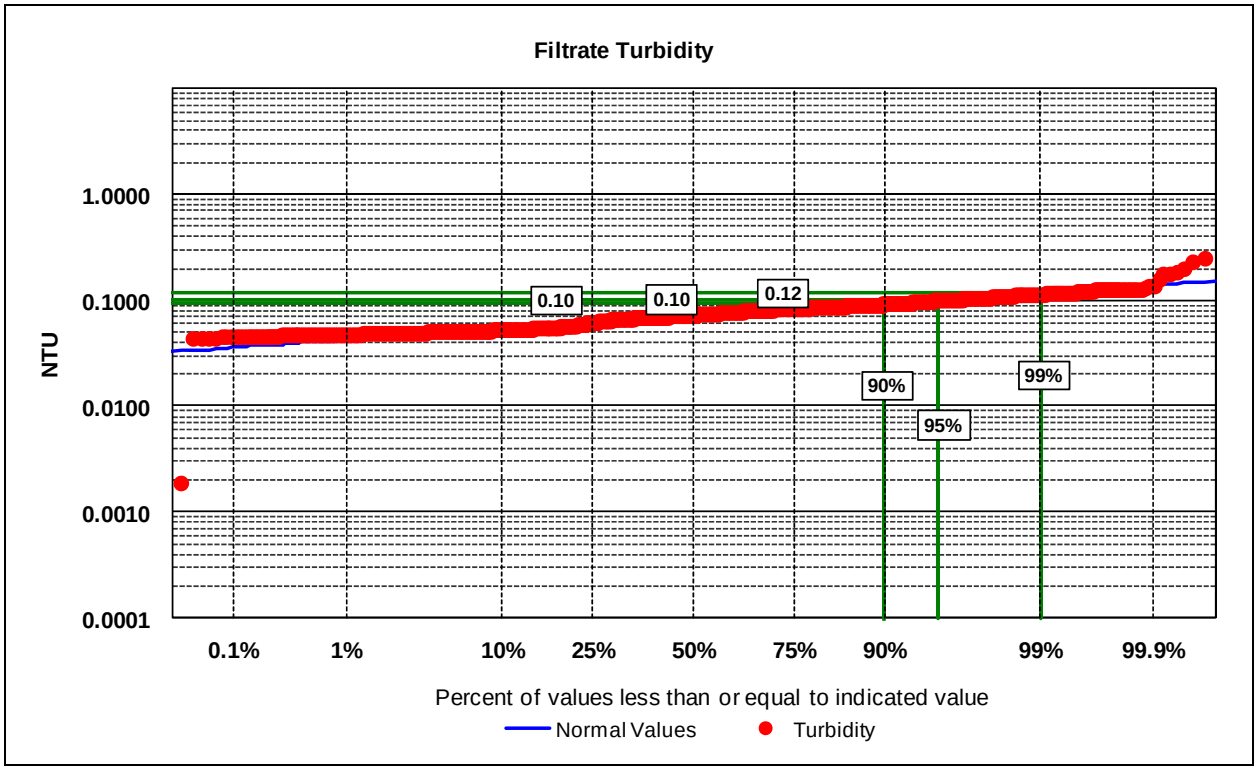

Figure 8: Probability Chart of Filtrate Turbidity from HYDRAsub® / Sterapore SADF® MBR

TSS Removal

The influent and effluent total suspended solids (TSS) concentrations displayed in Figure 9 were measured by Test America. The influent TSS varied between 42 mg/L and 100 mg/L. The effluent TSS was below the minimum detection limits (MDL) of the test in each analysis. The MDL was 10 mg/L.

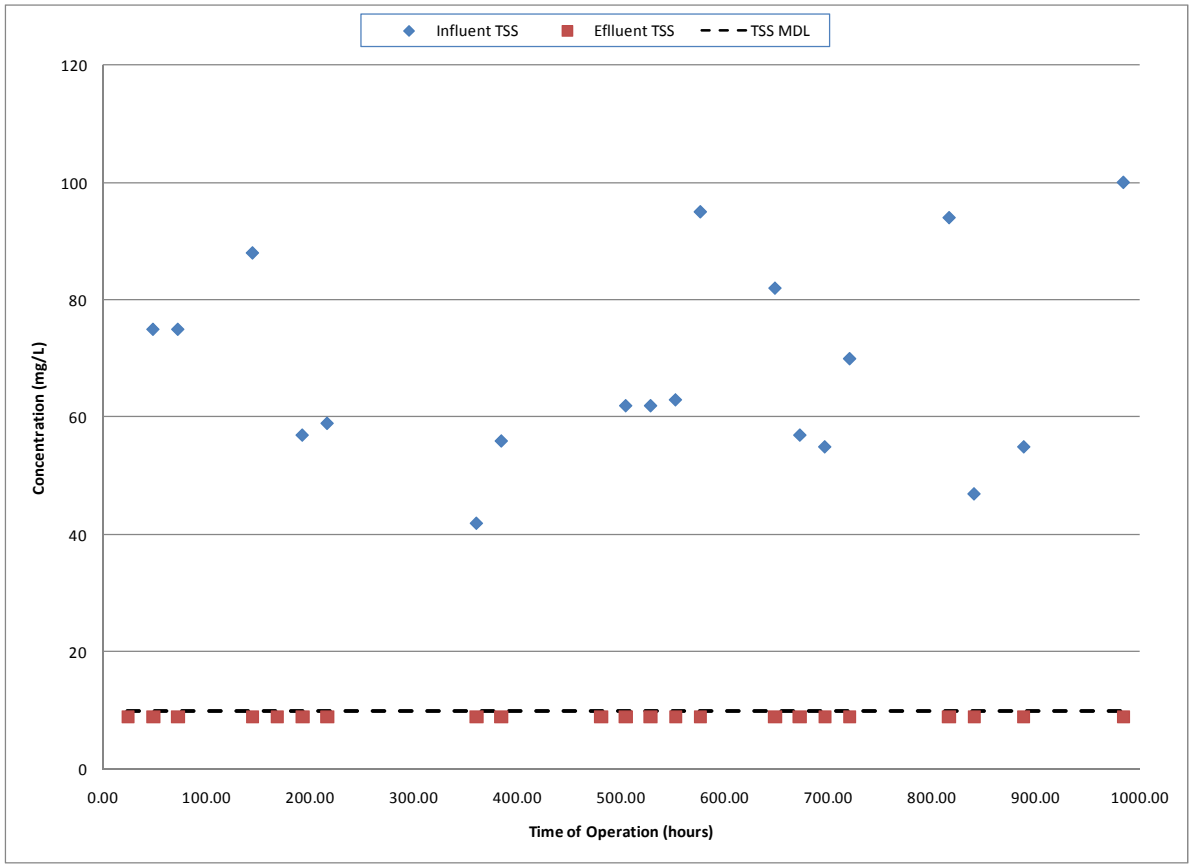

Figure 9: Influent and Effluent Total Suspended Solids Concentrations

Coliform Removal

Influent and effluent samples were taken on a weekly basis and analyzed for total and fecal coliform levels. The minimum detection limit (MDL) for fecal coliform was 2 MPN (Most Probable Number)/100 mL. In all effluent samples taken, the total and fecal coliform was below the MDL, indicating >6-log coliform removal capability. The results of the fecal coliform tests are shown in Table 4.

Table 4: Influent and Effluent Fecal Coliform Levels

Test Day	Fecal Coliform (MPN/100mL)		Concentration Change, Logarithmic
	Influent	Effluent	
3/16/2009	5.00E+06	<2	-6.39
3/23/2009	5.00E+06	<2	-6.39
3/30/2009	5.00E+06	<2	-6.39

4/06/2009	5.00E+06	<2	-6.39
4/13/2009	9.00E+06	<2	-6.65
4/15/2009	5.00E+06	<2	-6.39

Virus Removal

The results from the first virus removal test, performed at 33.1 LMH, are shown in Table 5.

Table 5: Anoxic tank and Filtrate MS2 Concentration at a filtrate flux of 33.1 LMH

Time After Beginning of Filtration (hours)	MS2 Concentration (PFU/100mL)		Concentration Change, Logarithmic
	Anoxic Tank	Filtrate	
1.67	1.10E+04	5	-3.34
3.83	1.20E+04	1	-4.08
5.67	1.20E+04	1	-4.08
7.67	1.00E+04	1	-4.00
24.08	6.20E+03	<1	-3.79

During the second virus removal test, the membranes operated at a flux of 50.1 LMH for four hours, and two samples were analyzed. The results are shown in Table 6.

Table 6: Anoxic tank and Filtrate MS2 Concentration at a filtrate flux 50.1 LMH

Time After Beginning of Filtration (hours)	MS2 Concentration (PFU/100mL)		Concentration Change, Logarithmic
	Anoxic Tank	Filtrate	
2.00	6.70E+03	<1	-3.83
4.00	5.60E+03	<1	-3.75

The final virus removal testing was performed at a flux of 45.4 LMH. The results are shown in Table 7.

Table 7: Anoxic tank and Filtrate MS2 Concentration at a filtrate flux 45.4 LMH

Time After Beginning of Filtration (hours)	MS2 Concentration (PFU/100mL)		Concentration Change, Logarithmic
	Anoxic Tank	Filtrate	
0	5.00E+03	18	-2.44
4.75	1.30E+04	2	-4.11
7.25	6.00E+03	<1	-3.77

It should be noted that the calculation for log removal depends on the virus concentration in the anoxic tank and the filtrate. Therefore, the higher the concentration in the anoxic tank the greater the log removal. At any rate, the HYDRAsub®/Sterapore SADF® MBR membranes average log removal of the MS2 bacteriophage was 3.72.

HYDRAsub®/Sterapore SADF® MBR Biological System Performance Results

Because of the solids barrier that the membranes provide in a MBR, the MLSS concentration in the system can be higher than that of a conventional activated sludge (CAS) system. As a result of the greater biomass and longer solids rentention times (SRT), the removal rate of BOD/COD and other biological nutrients, such as nitrogen, is higher in an MBR system than it is in a CAS system. Therefore, the effluent water quality of an MBR is not only better due to the membrane separation process, but also due to the enhanced biological process. Figure 10 shows the MLSS of the aeration tank and membrane tank throughout testing. An MLSS of 8000-12000 mg/L in the membrane tank is desired for optimal HYDRAsub®/Sterapore SADF® membrane performance.

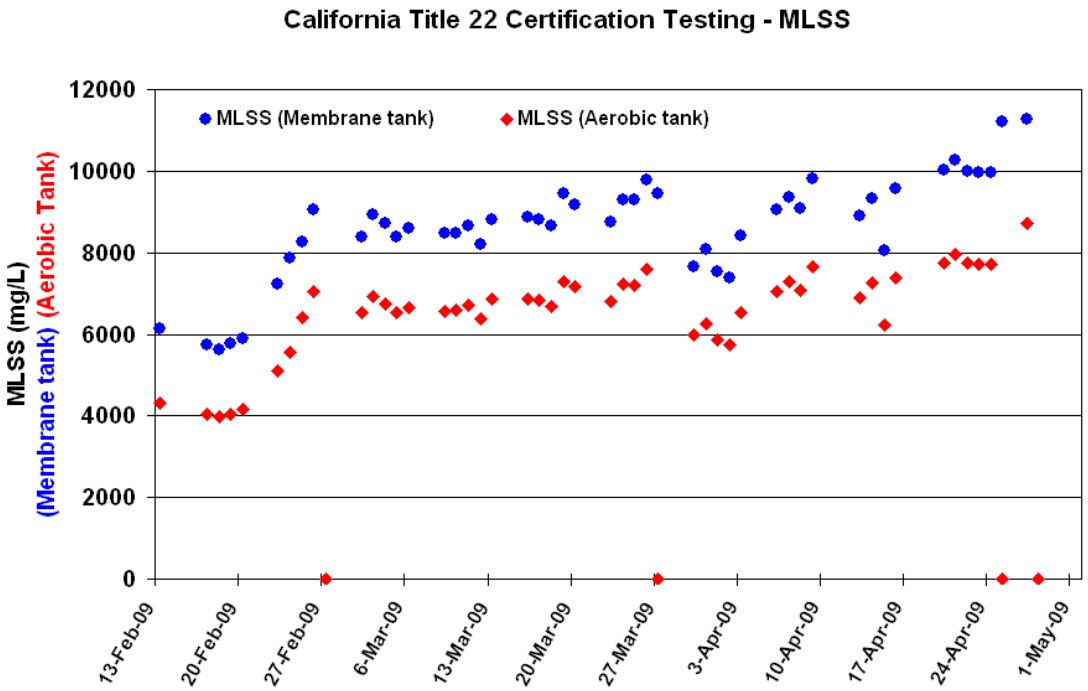

Figure 10: Aerobic Tank and Membrane Tank Mixed Liquor Suspended Solids

COD and BOD Removal

Figure 11 shows the influent and effluent chemical oxygen demand (COD) throughout testing. The influent COD averaged 306 mg/l, ranging from 270 mg/L to 445 mg/L. The dotted line on Figure 11 represents the minimum detection limit (MDL), which was 20

mg/L. Of the 22 effluent samples tested for COD, 11 were below the MDL. Assuming the effluent COD concentration of the samples below the MDL was equal to 20 mg/L, the average effluent COD was 21.42 mg/L, which corresponds to an average 93% removal.

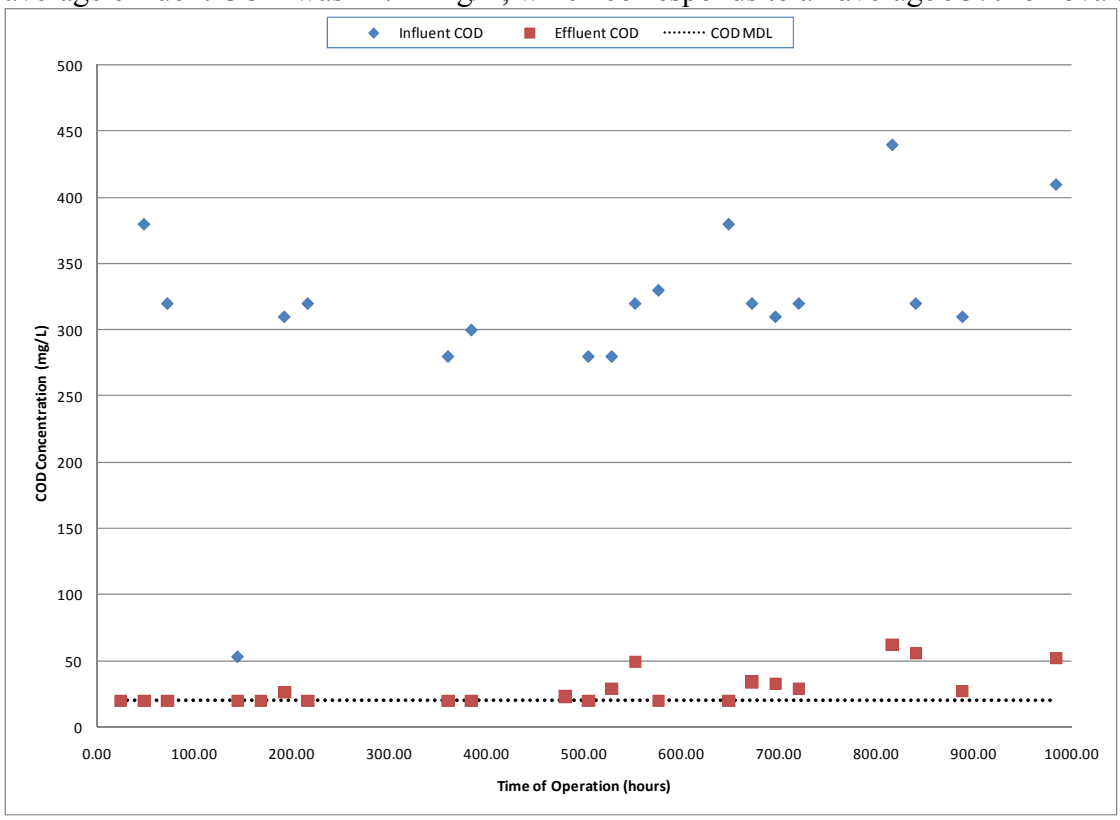

Figure 11: Influent and Effluent Chemical Oxygen Demand versus Time of Operation

Figure 12 shows the influent and effluent biochemical oxygen demand (BOD) during testing. The dotted black line represents the BOD MDL, which is 2 mg/L. The influent BOD concentration was between 120 mg/L and 190 mg/L, with an average of 149 mg/L. Of the 5 effluent samples analyzed for BOD, 2 of them were below the MDL. Assuming these samples had a BOD concentration of 2 mg/L, the average effluent BOD concentration was 2.98 mg/L, which corresponds to an average removal rate of 98%.

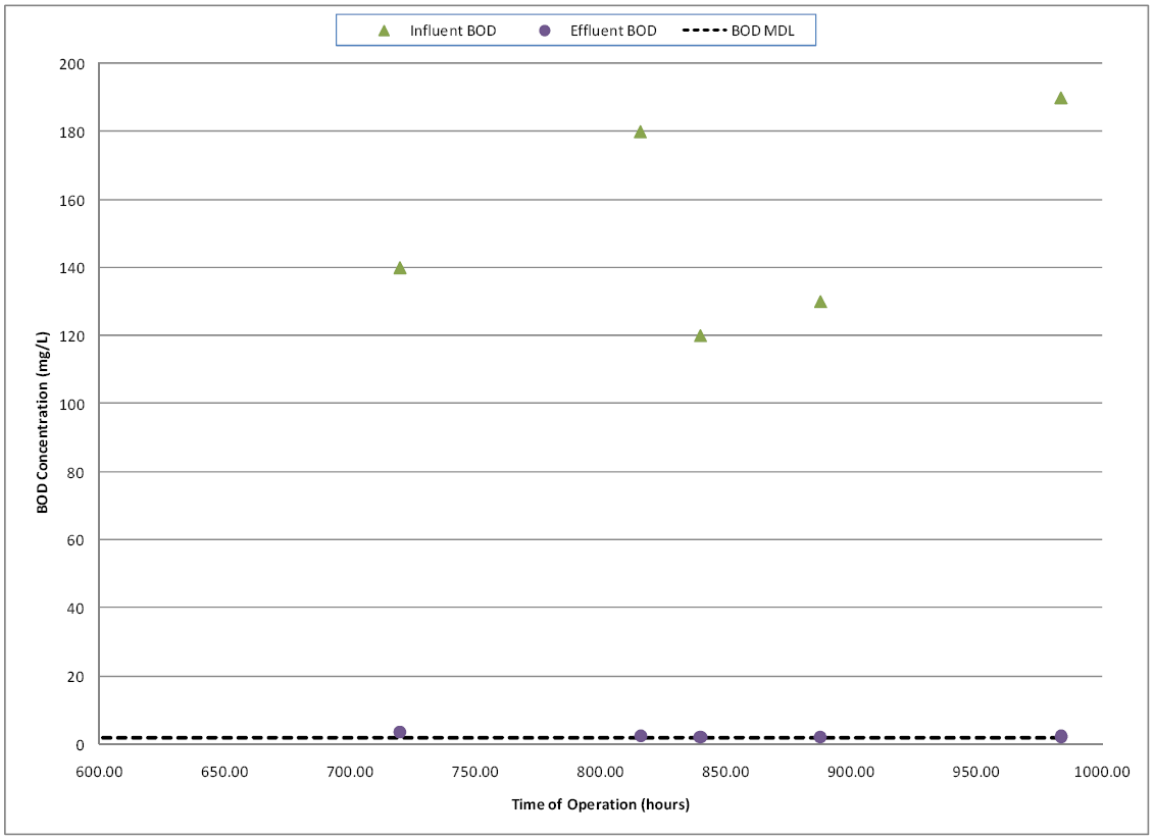

Figure 12: Influent and Effluent Biochemical Oxygen Demand versus Time of Operation

Total Kjeldahl Nitrogen (TKN) and Ammonia Removal

Influent and effluent Total Kjedahl Nitrogen (TKN) is shown in Figure 13. Influent TKN was between 55 and 130 mg/L, with an average of 70.35 mg/L. Effluent TKN was between 4.5 and 24 mg/L, with an average of 9.59 mg/L. This equates to an average TKN removal rate of 86%.

The influent and effluent ammonia concentrations are shown in Figure 14. Influent ammonia was between 37 and 100 mg/L, with an average of 68 mg/L. Effluent TKN was between 2.2 and 24 mg/L, with an average of 10.2 mg/L. This equates to an average TKN removal rate of 85%.

Effluent TKN and ammonia levels were higher than normal MBR effluent to due to insufficient DO in the aerobic tank, which was sometimes less than 1 mg/L.

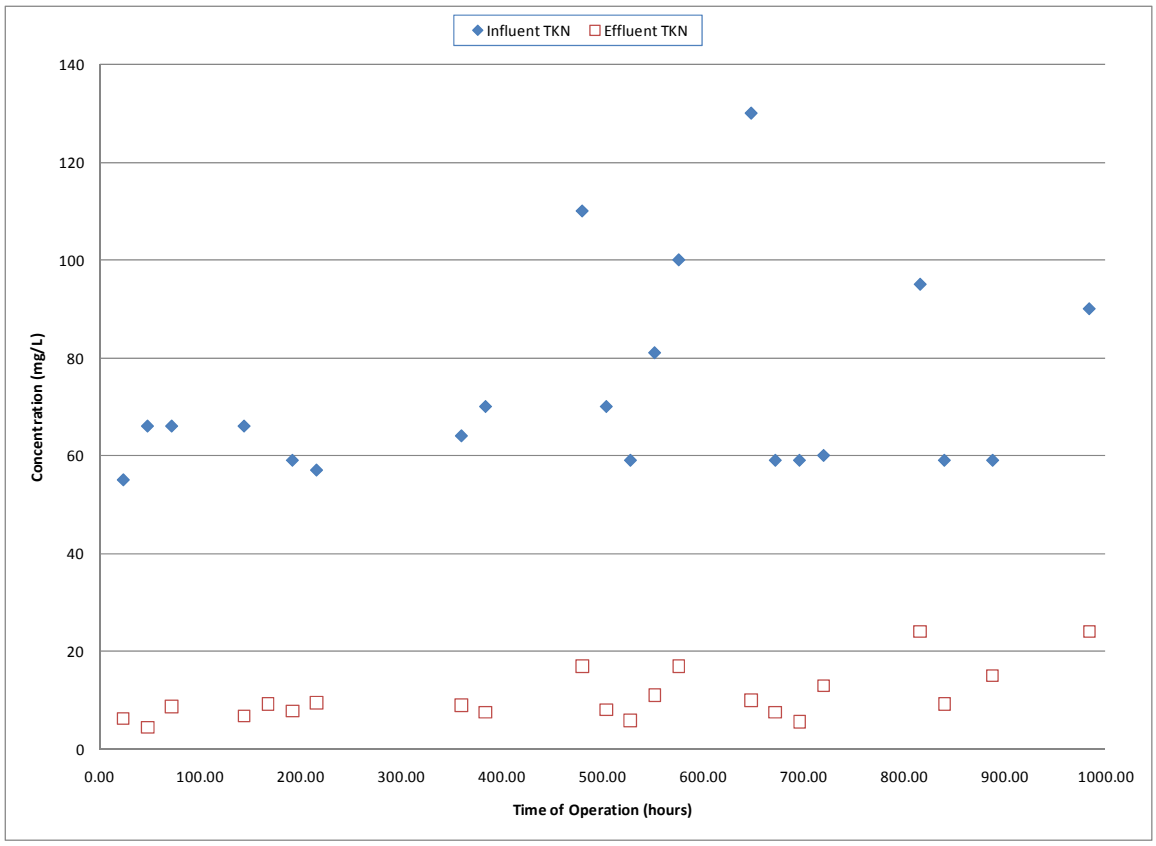

Figure 13: Influent and Effluent Total Kjeldahl Nitrogen versus Time of Operation

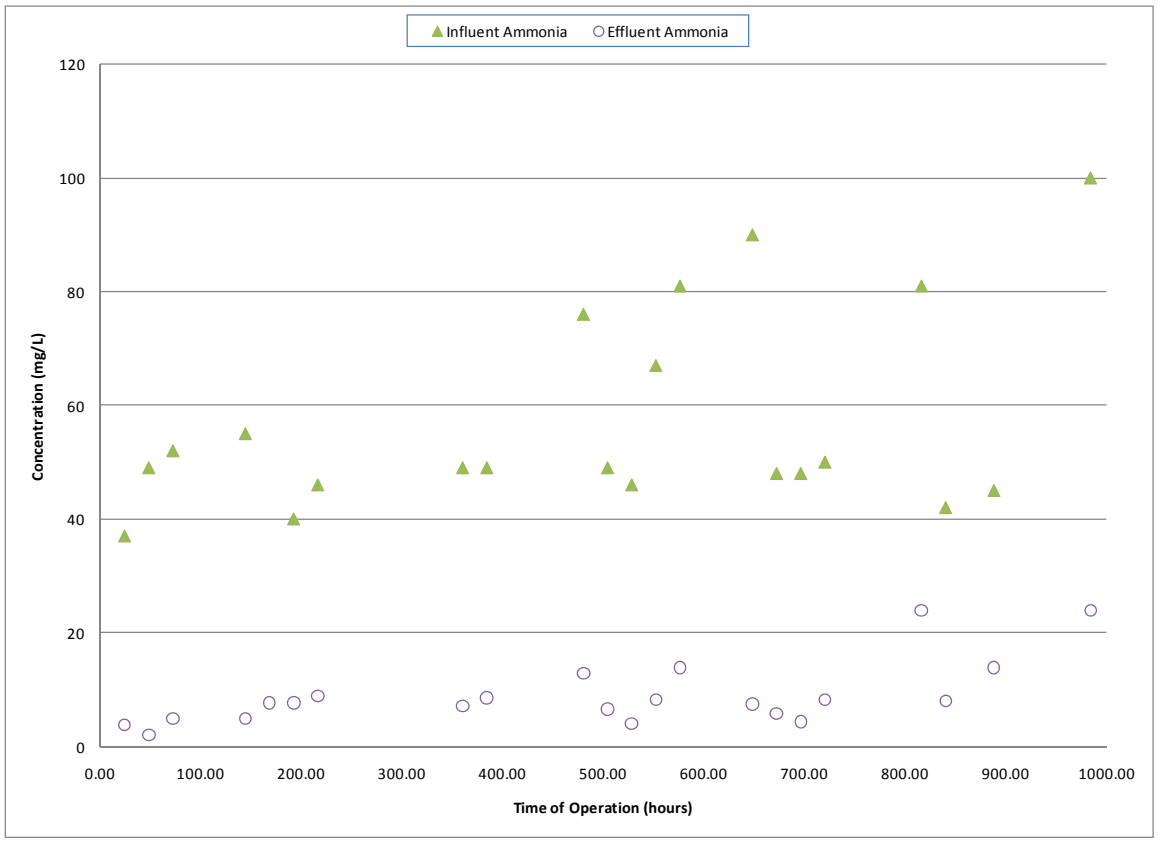

Figure 14: Influent and Effluent Ammonia versus Time of Operation

CONCLUSIONS

From the beginning of March 2009 to the end of April 2009, Hydranautics and MRE, with the help of HDR, conducted a CDPH approved pilot study which confirmed that HYDRAsub®/Sterapore SADF® MBR membranes are capable of consistently producing filtrate that meets the Title 22 requirements for domestic wastewater reuse. During the test period, the HYDRAsub®/Sterapore SADF® filtrate turbidity was less than 0.2 NTU 99.9% of the time and never exceeded 0.41 NTU, easily satisfying the Title 22 requirement for membrane filtered water.

Testing also showed HYDRAsub®/Sterapore SADF® MBR membranes capable of continuously operating at instantaneous fluxes of 33.1 LMH and 38.0 LMH while maintaining and average TMP of less than 13 kPa. Membrane performance during five separate four hour peak flux tests at an instantaneous flux of 50.1 LMH, two separate four hour peak flux tests at an instantaneous flux of 67.6 LMH, one 24 hour high flux test at an instantaneous flux of 41.4 LMH, and one 24 hour high flux test at an instantaneous flux of 45.4 LMH proved HYDRAsub®/Sterapore SADF® MBR membranes capable of handling fluctuations in the influent flow rate, which is to be expected in full scale applications. The TMP following the peak and high flux tests indicated that no irreversible fouling occurred.

In addition to low filtrate turbidity, virus removal testing at three different fluxes (33.1 LMH, 45.4 LMH, and 50.1 LMH) established an average of 3.72 log removal of the virus surrogate MS2 bacteriophage by HYDRAsub®/Sterapore SADF® MBR membranes.

Because of the HYDRAsub®/Sterapore SADF® MBR membranes, the MLSS in the biological treatment tanks was maintained between 6000-8000 mg/L. The high concentration of suspended solids in the system achieved 93% removal of COD, 98% removal of BOD, 86% removal of TKN, and 85% removal of ammonia.

After reviewing the data collected during this pilot study, which is summarized above, the California Department of Public Health accepted the use of HYDRAsub®/Sterapore SADF® MBR membranes as a filtration technology in compliance with the Title 22 Water Recycling Criteria in September of 2009.

Table of Contents

1 Introduction 4

2.1 Raw Water Conditions 5
2.1.1 Oil and Grease Content 5
2.1.2 Antifoaming Agent 5
2.1.3 Other 5
2.2 Pre-treatment 5
2.2.1 Screening 6
2.3 Activated Sludge Quality 6
2.3.1 Mixed Liquor Suspended Solids (MLSS) 6
2.3.2 Sludge Viscosity 6
2.3.3 Sludge Quality Tests 7
2.3.4 Temperature 7
2.4 Membrane Tank Layout 7
2.4.1 Tank Depth 7
2.4.2 Module Spacing 8
2.5 Filtration 8
2.5.1 Operating Sequence 8
2.5.2 Design Flux 9
2.5.2 Filtrate Pump 9
2.5.3 Process Control 9
2.6 Aeration 10
2.6.1 Air Flow Requirements 10
2.6.2 Air Diffusers 11
2.7 Chemical Cleanings 12
2.7.1 Chemical Enhanced Backwash (CEB) Cleanings 12
2.7.2 Clean In Place (CIP) Cleanings 12
2.7.3 Out Of System Cleanings 13
3 Operation Manual 14

3.1 Process Control Overview 14
3.1.1 Trans-membrane Pressure (TMP) Control 14
3.1.2 Biological System Control 14
3.2 Chemical Cleanings 15
3.2.1 Chemical Enhanced Backwash (CEB) Cleanings 15
3.2.2 Clean In Place (CIP) Cleanings 16
3.2.3 Out Of System Cleaning 17
3.3 Membrane Storage 18
3.3.1 Storage of New, Unused Membranes 18
3.3.2 Storage of Used Membranes 18
Appendix A 20

Proprietary - This document contains proprietary information owned by Hydranautics. All design, manufacturing, reproduction, distribution, use, patent rights, and sales rights regarding the same are reserved by Hydranautics.

List of Tables

Table 1 *Process Control for Membrane System* 10
Table 2 *Required Air Flow Rate for HSM Modules* 11

List of Figures

Figure 1 *Parts view of a HYDRAsub®-MBR Module* 8

Proprietary - This document contains proprietary information owned by Hydranautics. All design, manufacturing, reproduction, distribution, use, patent rights, and sales rights regarding the same are reserved by Hydranautics.

1 Introduction

The following guidelines for the HYDRAsub® Membrane Bioreactor (HSM) modules are written to define typical use that will use HYDRAsub® membranes in membrane bioreactor applications. The microbiological processes that take place vary according to influent water quality and generally, some pretreatment of raw water is required. For industrial applications, piloting is necessary to determine design and operating parameters. Please contact Hydranautics for details.

Complete HYDRAsub®-MBR modules include a stainless steel cage (with air diffusers), membrane elements and permeate adapters. The membrane portion consists of vertically oriented hollow fibers made of polyvinylidene fluoride (PVDF). Nominal pore size of the membrane is 0.4 µm and the fibers have an outer diameter of 0.11” (2.8 mm). For more product information, refer to specification sheets for the module of interest.

For safe and proper use of the product, please be sure to read through this manual before assembling, installing and operating the unit.

Proprietary - This document contains proprietary information owned by Hydranautics. All design, manufacturing, reproduction, distribution, use, patent rights, and sales rights regarding the same are reserved by Hydranautics.

2.1 Raw Water Conditions

2.1.1 Oil and Grease Content

Oil and grease content must be limited as it will adhere to the membrane surface and clog the pores. Animal and vegetable oil and grease concentration must not exceed 50 mg/L and mineral oil concentration must not exceed 3 mg/L. If the raw water conditions are such that the oil and grease content is higher than the recommended values, a dissolved air flotation (DAF) unit, oil skimmer or some other acceptable method may be used for oil removal.

2.1.2 Antifoaming Agent

Foaming may occur due to biological upsets and aeration in the bioreactor and membrane tanks. There should be a certain amount of freeboard allowed in the tank to accommodate foam, which is further described in section 2.4.1; however, if the foaming is excessive, an alcohol or water based antifoaming agent may be used. Silicone antifoaming agents must not be used as they will adsorb to the membrane surface and cause a decrease in permeability. Contact Hydranautics technical support before using any antifoam agents.

2.1.3 Other

The raw water must be treated biologically, specifically by aeration, for a set amount of time in order for the membranes to function properly throughout their warranted lifetime. Untreated soluble organic material in the raw water will cause excessive fouling and decrease permeability. It is recommended that the soluble ammonia and soluble biochemical oxygen demand (sBOD) concentrations in the membrane tank are less than 1.5 mg/L and 5 mg/L, respectively. This ensures that the organics have been fully treated prior to reaching the membrane tank. Proper biological system design is very important for successful operation of the membrane system. The biological design should be prepared by an engineering company or consultant with adequate knowledge and experience in biological processes for wastewater treatment as they pertain to membrane bioreactor systems.

Certain chemicals are harmful to the membranes and should be removed or used minimally prior to the filtration step. For industrial applications, consult Hydranautics to find out whether the HYDRAsub®-MBR is acceptable for treatment.

2.2 Pre-treatment

Proprietary - This document contains proprietary information owned by Hydranautics. All design, manufacturing, reproduction, distribution, use, patent rights, and sales rights regarding the same are reserved by Hydranautics.

2.2.1 Screening

Removal of large solids and fibrous material is required for stable operation of HYDRAsub®-MBR. For municipal wastewater, typical pre-screening is still necessary, namely grit removal or coarse screening. The final screen filter should have 1-2 mm openings, depending on the screen type, so as not to allow fibers and hair into the system. These materials will entangle in the membrane fibers and possibly damage the membranes. Fine screens designed for removal of fibrous materials utilizing perforated plates or punched holes with up to 2 mm openings are acceptable. Bar or wire screens with up to 1 mm openings are acceptable. In any case, self-cleaning capability is recommended.

2.3 Activated Sludge Quality

2.3.1 Mixed Liquor Suspended Solids (MLSS)

Unlike conventional activated sludge treatments, membrane bioreactors can handle high MLSS concentrations. For typical operation, MLSS concentration in the membrane tank will be in the range of 8,000 – 10,000 mg/L. The concentration should never go below 5,000 mg/L or increase above 12,000 mg/L during operation. The trans-membrane pressure (TMP) may increase rapidly at low MLSS concentrations due to sludge floc size and a higher amount of non-degraded organic material (measured as sBOD or NH_4-N). At higher MLSS concentration (>12,000 mg/L), TMP may increase due to higher sludge viscosity and lower air scouring effects. During start-up, the MLSS concentration may be lower than the recommended range and therefore the flux must remain low and slowly be increased as the MLSS concentration increases. The food to microorganism (F/M) ratio can also be used as a guideline for flux by keeping a reasonably constant value between 0.05-0.1 kg BOD/kg TSS/day or 0.1-0.2 kg COD/kg MLVSS/day. For details on start-up procedures, see TSB400 *Start-Up and Usage Guidelines for HYDRAsub®-MBR*. To keep MLSS concentration from going over the recommended range, bleeding of solids (waste activated sludge, or WAS) is required either intermittently or continuously. The biological design should include the amount of solids removal required to keep MLSS in the recommended range.

2.3.2 Sludge Viscosity

Sludge viscosity should be tested daily and should not exceed 15 mPa-s when using a Rion Visco Tester VT-03F or other viscosity meter. For industrial wastewater, the viscosity may not exceed 30 mPa-s. Adjusting the WAS helps keep these levels within the required range.

Proprietary - This document contains proprietary information owned by Hydranautics. All design, manufacturing, reproduction, distribution, use, patent rights, and sales rights regarding the same are reserved by Hydranautics.

2.3.3 Sludge Quality Tests

There are multiple filtration tests that may be done to determine the sludge quality. Hydranautics recommends a paper filtration method, explained in detail in TSB404 *Filterability Test for Sludge Analysis* and a modified sludge volume test, explained in detail in TSB406 *Sludge Volume Test (SV30)*. Other recommended methods are the Time to Filter (TTF) test, which entails timing a fixed volume of sludge filtered through a filter paper, and the Capillary Suction Time method. These tests are more qualitative than quantitative and can be used as a day to day comparison for a plant.

2.3.4 Temperature

The membranes must be operated in a temperature range of 5-40ºC (41-104ºF). For lower temperatures, the operating flux may be low due to higher water viscosity. The optimum temperature for a biological system should be determined by the biological system designer. A heat exchanger or chiller may be required to cool feed water streams in order to keep the temperature within range, especially in some industrial applications.

2.4 Membrane Tank Layout

2.4.1 Tank Depth

The modules are installed upright in the tank so that the air diffusers are located at the bottom of the unit, as shown in Figure 1. The membranes must always be completely submerged so as to avoid drying of the fibers.

Proprietary - This document contains proprietary information owned by Hydranautics. All design, manufacturing, reproduction, distribution, use, patent rights, and sales rights regarding the same are reserved by Hydranautics.

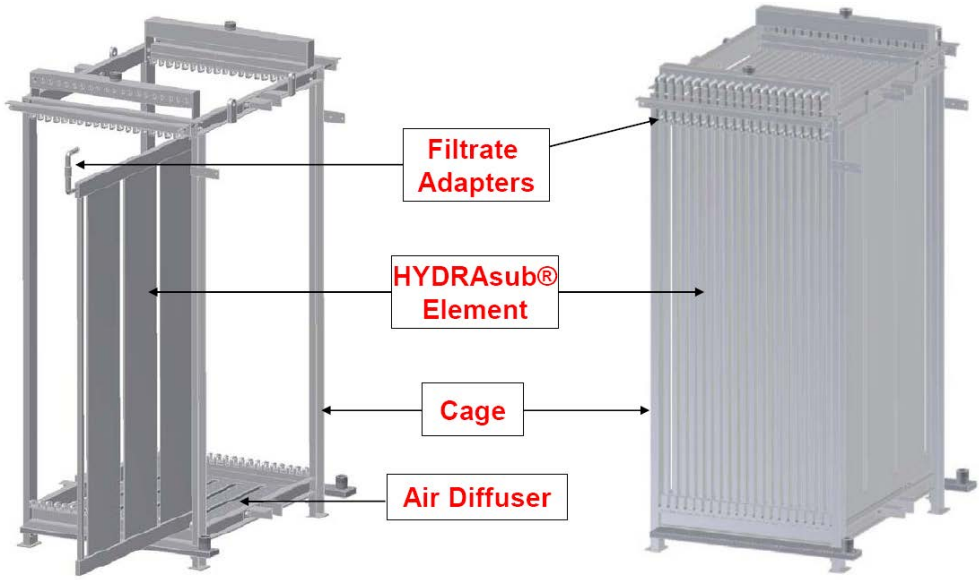

Figure 1 *Parts view of a HYDRAsub®-MBR Module*

The minimum water level in the tank for all modules is 2.7 m (8.9 ft). An additional freeboard of 0.5 m (1.6 ft) is required to account for an increase in tank level due to aeration and foaming. If a deeper tank is used, a higher water level is acceptable as long as sludge can be sufficiently mixed in the tank. Note that energy consumption will be higher in a deeper tank as a result of higher discharge pressure on the blowers.

2.4.2 Module Spacing

The HYDRAsub®-MBR modules are placed inside the membrane tank according to the membrane spacing details given for a specific project. Enough space is designated in the design for guiderail installation to insert, place and remove the modules from the tank. It is recommended to leave additional room in the tank for equipment and instrumentation, but this can be done on a project by project basis. The recommended spacing for each project will be given in a technical proposal prepared by Hydranautics.

2.5 Filtration

2.5.1 Operating Sequence

HYDRAsub®-MBR modules are submerged into a tank and filtration is achieved by applying a vacuum to the permeate side of the fibers. Sludge is kept in the tank while permeate crosses the membrane barrier from the outside to the inside of the fiber.

Proprietary - This document contains proprietary information owned by Hydranautics. All design, manufacturing, reproduction, distribution, use, patent rights, and sales rights regarding the same are reserved by Hydranautics.

During a filtration cycle there is a filtration period and a soak (or relaxation) period. It is necessary to keep the filtration time at or below seven (7) minutes to reduce the fouling rate. A soak time of one (1) minute or longer is also required to allow particles on the membrane surface to be removed from the membrane surface via air scour. When filtration occurs without a soak period, particles adhere to the membrane surface causing high TMP and making maintenance cleanings less effective. During start up, the filtration duration may be reduced and/or the soak time may be extended to reduce the net flux and possible fouling.

2.5.2 Design Flux

For typical municipal wastewater, the design flux is chosen based on the minimum sludge or feed water temperature observed at the plant. It is important to use the proper value to ensure the provided membrane area will be able to handle the full system capacity at the lowest water temperature the plant will experience.

For industrial wastewater, the design flux will be based on temperature and wastewater characteristics. Generally, the design flux will be lower for higher BOD and chemical oxygen demand (COD) concentrations. Pilot testing is recommended for applications in which the wastewater composition is unknown or where there are no previous membrane filtration studies. Piloting will not only help determine a suitable design flux, but will also help define appropriate operating sequences and cleaning frequencies. Projects for industrial applications must be discussed with Hydranautics prior to any design, bid or installation to ensure proper precautions are taken in the design and operation of the plant.

2.5.2 Filtrate Pump

A centrifugal or positive displacement pump is required for pulling filtrate from the membranes, and a self-priming pump is preferred. If a self-priming pump is not used, some other type of priming system should be installed on the suction side of the pump. The pump should be designed for the maximum peak operating flow.
The trans-membrane pressure (TMP) is calculated as the pressure difference across the membrane fibers, which can be taken as the vacuum pressure at the water level in the membrane tank. During filtration, the operating TMP is usually 2-4 psig (0.14-0.28 bar) and should not exceed 6 psig (0.4 bar). Refer to section 2.7 for details on chemical cleanings to maintain TMP.

2.5.3 Process Control

Proprietary - This document contains proprietary information owned by Hydranautics. All design, manufacturing, reproduction, distribution, use, patent rights, and sales rights regarding the same are reserved by Hydranautics.

There must be features incorporated into the system to safeguard the membranes from equipment and operational failures. Table 1 lists the critical items that require action for the membrane system design.

Table 1 *Process Control for Membrane System*

	Item	Description	Control	Action
1	Filtration during soak period	Suction may occur during the soak period if a siphon forms on the permeate line	Install automatic valve on suction side of permeate pump or anti-siphon valve on discharge side of permeate pump	Stop filtration pump and alarm if TMP exceeds ±0.1 psi during soak period
2	High TMP	High fouling can occur and irreversible fouling needs to be prevented	Install high pressure switch on suction side of permeate pump	Stop filtration pump and alarm
3	Membrane tank low level	Water level may drop below top of membranes which would allow membranes to dry out	Install low level switch and/or level transducer in tank	Stop filtration pump and alarm
4	Membrane tank high level	Sludge or foam may overflow	Install high level switch or transducer in tank or an overflow line	Stop RAS pump (flow to membrane tank) and alarm. May trigger antifoam dosing pump.
5	Low air scour flow rate	Blower may fail or output may decrease over time	Install low air flow or pressure switch	Stop filtration pump and alarm
6	High filtrate turbidity	Leaks in filtrate adapters or connections may occur or broken fiber(s) may be present	Use turbidimeter to monitor on a constant basis	Alarm only. Operator must isolate modules, check connections and repair (see TSB411 for details)

There are other process control factors that are required for the biological system; however, they are not detailed in this document. Please contact Hydranautics for further recommendations.

2.6 Aeration

2.6.1 Air Flow Requirements

The membranes require continuous air flow in order to keep them operational. The air physically cleans the membranes by scouring fine particles and deposits from the surface. The necessary flow rate in terms

Proprietary - This document contains proprietary information owned by Hydranautics. All design, manufacturing, reproduction, distribution, use, patent rights, and sales rights regarding the same are reserved by Hydranautics.

of the module projection (cross sectional) area is 100 – 150 Nm^3/m^2-hr. The air flow rates are given in Table 2 for each module.

Table 2 *Required Air Flow Rate for HSM Modules*

Module	Minimum Air Flow (Nm^3/hr)	Nominal Air Flow (Nm^3/hr)	Maximum Air Flow (Nm^3/hr)
HSM250-ES	60	75	90
HSM500-ES	117	147	176
HSM750-ES	173	216	260
HSM1000-ES	228	288	348
HSM1500-ES	353	442	530

Higher air flow rates should be used only when there is high fouling (high TMP) due to poor sludge quality. Please contact Hydranautics if higher air flow rates are required. Higher air flow rates cause high shear on particles in the sludge and create high viscosity in the mixed liquor. High air flow rates also break up flocculations causing finer particles to be present in the sludge, possibly increasing filtrate turbidity and silt density index (SDI). Alternatively, air flows below the specified range may cause fouling to occur more rapidly and cause an increase in cleaning frequency or other issues. For these reasons the air flow must be kept within the recommended range.

The air flow to the membranes may also contribute to the aerobic treatment of the sludge. The amount of air used in the membrane tank(s) may be taken into account when sizing the aerobic portion of the plant. This must be determined by taking into account the dissolved oxygen concentration in the membrane tank, the hydraulic retention time of the return flow in the piping from one tank to the other and the oxygen uptake rate of the sludge.

2.6.2 Air Diffusers

The standard air diffuser used in HSM modules is a stainless steel coarse bubble sheet diffuser designed as a plate with channels containing rows of 5-6 mm holes along the entire length. The air diffusers have a head loss of 0.69 kPa (0.1 psig) per module. The sheet must be level within +/- 1.5 mm/1000mm module length so that aeration is uniform along the entire length and width of the module. There are adjustable slots on the mounting tabs of the diffuser to level the diffuser if necessary.

An overview of the start-up procedure for the air diffusers is described below:

Proprietary - This document contains proprietary information owned by Hydranautics. All design, manufacturing, reproduction, distribution, use, patent rights, and sales rights regarding the same are reserved by Hydranautics.

1. Confirm the diffusers are level by filling the basin with water until the diffusers are 1" to 2" under the water level. In the event of air leaks at connections or uneven installation, the diffusers are accessible.
2. Activate the blower and introduce air to the system. Do not exceed the nominal air flow when operating at a low water level. Check piping and diffusers for leaks, and repair if required.
3. While maintaining air to the system, continue filling the basin with water until the design depth is reached and the modules are completely submerged.
4. Ensure aeration is even to the whole module and not concentrated on only a few areas. If it is uneven, adjust the level of the module or diffuser and check again for leaks.

2.7 Chemical Cleanings

2.7.1 Chemical Enhanced Backwash (CEB) Cleanings

A chemical enhanced backwash is a maintenance cleaning that must be performed at least once per week to restore and/or maintain the TMP. It is necessary to do the cleanings at the recommended frequency to prevent foulant accumulation resulting in long term fouling issues. A CEB may be performed more frequently than one week if the TMP increases very rapidly. The chlorine CEB will decompose organic substances and (less commonly used) the acid CEB will remove inorganic substances on the membrane surface and in the membrane pores to reduce fouling. Please consult Hydranautics before increasing the chemical cleaning frequency.

Sodium hypochlorite or hydrochloric, sulfuric, or citric acid is used at a low concentration and sent through the membranes via a backwash. The chemical may be diluted with either permeate water or clean tap water using a back wash pump, typically a centrifugal pump. A diaphragm pump (positive displacement) is recommended for the chemical dosing. The CEB cleanings are done *in situ* and may be fully automated for ease of operation.

2.7.2 Clean In Place (CIP) Cleanings

A clean in place (CIP) is another type of *in situ* chemical cleaning that utilizes backwashing with a chemical solution, either with chlorine or acid. The most common type of CIP occurs at least once every three months and employs a high concentration chlorine solution using sodium hypochlorite. A sodium hypochlorite CIP should also be performed if the TMP reaches a certain value above the initial pressure experienced by the

Proprietary - This document contains proprietary information owned by Hydranautics. All design, manufacturing, reproduction, distribution, use, patent rights, and sales rights regarding the same are reserved by Hydranautics.

membranes during filtration at the same flux. A sodium hypochlorite CIP should be done at whichever point occurs first, after three months or when the pressure increases by a preset amount. This is described more in section 3.2.2.

Each chlorine CIP should be followed with a 0.5-1% citric or oxalic acid CIP cleaning. Citric acid helps in removing fouling caused by metallic salts and inorganic coagulants that may not be removed by chlorine cleanings.

Cleaning only one train per day and following each Chlorine CIP with an Acid CIP will help to minimize the impact of the chlorine on and stabilize the biological system.

2.7.3 Out Of System Cleanings

An Out Of System cleaning is required when the TMP is not restored to a sufficient level using a CIP cleaning. The module is soaked in a chemical solution in a separate, clean tank, free of debris and sharp edges. This can be done by removing the module, manually rinsing accumulated sludge off of the elements, and placing it into a separate tank or by transferring the contents of the membrane tank to another tank and rinsing out the membrane tank for the chemical soak. In this case, the membrane module is completely immersed into a high concentration chlorine or acid solution and left to soak for a period of time, depending on the amount of fouling and the amount of time available for the module to be offline. Out of System cleanings should be a last resort to dealing with fouling and Hydranautics should be consulted before performing this type of cleaning. It is not expected that this type of cleaning will be needed for typical municipal wastewater treatment plants during the membrane lifetime, but it is a recommended option, especially for large plants where the cost of adding the facilities will be relatively small and for industrial or other high fouling applications.

Proprietary - This document contains proprietary information owned by Hydranautics. All design, manufacturing, reproduction, distribution, use, patent rights, and sales rights regarding the same are reserved by Hydranautics.

3 Operation Manual

3.1 Process Control Overview

3.1.1 Trans-membrane Pressure (TMP) Control

The TMP is the most important reading in monitoring membrane condition. An increase in TMP may indicate fouling and a decrease in TMP may indicate effective cleaning and/or operating methods. The TMP must be kept within a certain range to protect the membranes. So, it is important to continuously monitor online, manually take daily readings, at minimum, and have proper safety systems in place to keep the TMP within this range.

Upon start-up of the membranes, the TMP should be recorded and logged automatically. The initial TMP, P_1, is the initial value recorded when the system is operated with sludge at the target operating flux. See TSB400 *Start Up and Usage Guidelines for HYDRAsub®-MBR* for instructions on start up of a HYDRAsub®-MBR plant. It is important that the sludge conditions and pre-treatment requirements listed in TSB400 are met. The vacuum gauge/sensor must be installed so that any errors due to static head effects are minimized. Typically, the ideal location for the vacuum gauge/sensor is outside of the membrane tank at a height equal to average water level inside the membrane tank. The vacuum measurement should be corrected for any losses due to piping, valves, fittings, and static head. See TSB407 *Process Data Logging and Performance Analysis for HYDRAsub-MBR Systems* for TMP and flux calculation and analysis.

3.1.2 Biological System Control

The sludge must be kept at conditions recommended in section 2.3. MLSS concentration, dissolved oxygen (DO), temperature, viscosity and filtration (refer to TSB404) and sludge volume (refer to TSB406) tests should be done daily to keep records of sludge quality.

Raw water quality to the system should also be recorded, including BOD, COD, total Kjeldahl nitrogen (TKN), ammonia-nitrogen, total nitrogen, total phosphorous, alkalinity levels, and total suspended solids (TSS). Treated water quality readings should include the aforementioned measurements, as well as turbidity and any other measurements essential to monitor effluent quality and/or discharge requirements. The frequency of measurement of these parameters will vary depending on the size and scope of the project, the available resources and the warranty

Proprietary - This document contains proprietary information owned by Hydranautics. All design, manufacturing, reproduction, distribution, use, patent rights, and sales rights regarding the same are reserved by Hydranautics.

requirements. Typical measurement parameters and frequencies are suggested in TSB408 *Analytical Data Logging and Performance Analysis for HYDRAsub-MBR Systems,* provided by Hydranautics.

3.2 Chemical Cleanings

3.2.1 Chemical Enhanced Backwash (CEB) Cleanings

Chlorine CEB cleanings need to be performed at least once per week to prevent long term and permanent fouling. Following is the procedure for CEB cleanings:

1. During a soak cycle, stop normal operation so that filtration does not resume after the soak time is completed.
2. Continue aeration for two more minutes and then shut off air.
3. Prepare a 300-500 ppm chlorine solution made from 12.5% sodium hypochlorite (NaOCl). The chemical is commonly injected in-line but may be mixed in the cleaning tank. The volume of solution required is 2 L/m² of membrane area plus the amount of hold up in the injection lines. For example, for one HSM500 module, at least 1000 L of solution is required for injection, not including the hold up volume in the piping.
4. Inject the solution as a backwash at a flux of (4 lmh) 2.4 gfd until the entire solution is used (approximately 30 minutes). Backwash pressure should not exceed 2 psig (0.14 bar) at the TMP reading location.
5. Let the solution soak for 0-30 minutes (t_{s1}), depending on the extent of fouling. The solution will degrade organic compounds and deposits in and around the membrane pores.
6. Resume aeration and filtration per normal operation.

The CEB procedure can also be described in the following format, where T is time in minutes.

T=0: Shut off filtration pump and filtration lines.
T=2: Shut off aeration to membranes. Begin injection of 300-500 ppm chlorine solution (as described above).
T=32: Stop injection. Begin soak.
T=32+ t_{s1}: Resume aeration, then filtration as normal.

The concentration of chemical solution used will depend on the extent of fouling that has occurred on the membrane surface. For high flux and high mixed liquor suspended solids in the membrane tank, a 500 ppm chlorine solution may be used if a cleaning with 300 ppm chlorine solution does not sufficiently reduce the TMP. If MLSS concentration is low, a 300 ppm chlorine solution may only be required. Also, for high fouling instances, a soak time may be added immediately after injection of the

Proprietary - This document contains proprietary information owned by Hydranautics. All design, manufacturing, reproduction, distribution, use, patent rights, and sales rights regarding the same are reserved by Hydranautics.

chemical solution for any amount of time, t_{s1} (up to 30 minutes), to further restore the TMP.

If constraints on chlorine content in the filtrate are stringent, the system may be designed such that an initial amount of filtrate is diverted to the front of the plant. The initial amount diverted is typically equal to the volume of hold up in the injection lines where the chemical solution has not yet reached the membrane tank. The volume of chlorine sent to the front of the plant will be consumed when it goes through the biological treatment portion of the plant. A neutralization chemical may also be dosed in the filtrate line.

In case the feed water has high concentrations of inorganic materials and/or high scaling potential, acid CEBs may be required. In this case, follow the same procedure as for the chlorine CEB but use a 0.15% hydrochloric/sulfuric acid or 0.5% citric acid solution instead of chlorine. Acid CEBs are rarely required. Contact Hydranautics to set the required frequency.

3.2.2 Clean In Place (CIP) Cleanings

A sodium hypochlorite CIP (CIP1) must be done when one of following occurs: the TMP increases more than 2.2 psig (0.15 bar) above P_1, three months have passed since the last CIP1 or the beginning of operation, or the TMP reaches the maximum CIP of 6 psi (0.4 bar). For example, if P_1 is found to be 1.0 psig at a certain operating flux value and the TMP increases to 3.2 psig within two and a half months from the previous CIP1, another CIP1 must be performed. When a CIP1 is performed, a CEB does not need to be done in the same week. CIP1 may be done with 3000-5000 ppm chlorine solution, most commonly made from 12.5% sodium hypochlorite (NaOCl).

An acid CIP (CIP2) with 0.5-1% citric or oxalic acid must be performed following each chlorine CIP, for reasons described in section 2.7.2. To prevent chemical mixing, flush the chemicals out of the system by performing 3-4 filtration cycles and flushing the chemical solution injection line. The following procedure may be used for CIP cleanings with either chemical:

1. During a soak cycle, stop normal operation so that filtration does not resume after the soak time is completed.
2. Continue aeration for two more minutes and then shut off membrane air.
3. Prepare the chlorine or citric/oxalic acid solution at the required concentrations according to the recommendations given above. The amount of chemical solution required is 2 L/m² of membrane area

Proprietary - This document contains proprietary information owned by Hydranautics. All design, manufacturing, reproduction, distribution, use, patent rights, and sales rights regarding the same are reserved by Hydranautics.

plus the amount of hold up in the injection lines. For example, for the HSM500 module, at least 1000 L of solution is required for injection, not including the hold up volume in the piping.

4. Inject the chemical solution at a flux of (4 lmh) 2.4 gfd for 30 minutes. Backwash pressure should not exceed 2 psig (0.14 bar) at the TMP gauge.
5. Let the solution soak in the tank for 90 minutes. It is important to allow time for the soak so that the solution can sit on the membrane surface and degrade organic or inorganic substances in and around the membrane pores.
6. Resume aeration for 30 minutes. The solution will be diffused throughout the membrane tank during the aeration period.
7. Resume filtration per normal operation.

The procedure for CIP1 and CIP2 can also be described in the following format, where T is time in minutes.

T=0: Shut off filtration pump and lines.
T=2: Shut off aeration to membranes and begin chemical injection.
T=32: Stop injection. Begin soak.
T=122: Begin aeration only mode.
T=152: Resume filtration as normal.

A concentration in the upper end of the given range may be used when there is high fouling, for instance, when TMP rises very quickly within a short period. The cleaning solution may have a concentration in the lower end of the range when the TMP has not increased significantly within three months and is only being done because it is the three month requirement.

As with the CEB, discharge of the chlorine or citric acid solution in the injection line may be diverted to the front of the plant so as not to contaminate the filtrate tank. Take caution to completely flush injection lines after cleaning with either chemical. Keep citric acid and chlorine solutions separate from each other as mixing of the two can form chlorine gas, which is poisonous.

3.2.3 Out Of System Cleaning

When a CIP cleaning or aeration at the maximum air flow rate for one hour without filtration does not restore the TMP to within 0.73 psig (0.05 bar) of the initial pressure experienced by the membranes at the same flux, an Out Of System cleaning may be required. The following procedure describes the cleaning method when the module is to be removed from the membrane tank and placed into a cleaning tank. For instructions on

Proprietary - This document contains proprietary information owned by Hydranautics. All design, manufacturing, reproduction, distribution, use, patent rights, and sales rights regarding the same are reserved by Hydranautics.

removing a module from the membrane tank, refer to TSB411 *Assembly, Installation and Servicing Guidelines for HYDRAsub®- MBR*.

1. Remove the module from the membrane tank.
2. Remove the sludge accumulated at the top of the elements by rinsing. This is typically done with a hose at city tap water pressure. Pressure should not exceed 145 psig (1 MPa) and the nozzle should be at least 20 cm away from membranes. In cases where sludge accumulation is significant, the elements may need to be removed to achieve sludge removal.
3. Immerse the module into a tank filled with 1000-3000 ppm chlorine solution. Make sure that the volume of solution displaced by the wet module does not cause the cleaning tank to overflow. For best results, the solution should be kept at about 40ºC as the cleaning capability of the solution lowers as temperature decreases.
4. Let the module sit for 6-24 hours.
5. Rinse the module with clean water after the soak is complete. Rinsing water pressure should not exceed 145 psig (1 MPa) and the nozzle should be at least 20 cm away from membranes. Sludge rinsed off the modules needs to be disposed per local regulations.
6. Return the module to the membrane tank.
7. Aerate for 30 minutes before resuming filtration.

An Out Of System cleaning may also be done with citric or oxalic acid if the feed has high alkalinity or high inorganics and the TMP is not restored by an Out Of System cleaning with chlorine. The procedure is the same as above except that the module is immersed in a 1-2% acid solution.

3.3 Membrane Storage

3.3.1 Storage of New, Unused Membranes

The modules should be stored in a cool, dark, dry place away from any sharp edges or debris. When they are ready to be put into operation, the permeability of the membranes must be tested. If the average permeability of the new membranes in clean water is less than 15 gfd/psig (370 lmh-bar), refer to TSB401 *Hydrophilic Treatment Procedure*.

3.3.2 Storage of Used Membranes

Once the modules are used in sludge conditions, it is recommended that the membranes are stored wet. They can be stored dry, if necessary, but will all require hydrophilic treatment (see TSB401) before being put back into service. Sludge will adhere to the membrane surface even after a thorough cleaning and it will be difficult to remove if drying of the fibers occurs. For any membrane (whole module, single element, etc.) that is to

Proprietary - This document contains proprietary information owned by Hydranautics. All design, manufacturing, reproduction, distribution, use, patent rights, and sales rights regarding the same are reserved by Hydranautics.

be stored wet, a CEB in clean water or Out Of System cleaning should first be performed. The storage tank should be clean, free of sharp edges or debris, and kept in a cool, dark place so as to avoid direct sunlight. Care should also be taken so as not to allow the tank to be exposed to freezing conditions. Tank water should be replaced 1-4 times per month to avoid microorganism growth in the tank. For long storage times, contact Hydranautics for further instructions.

Proprietary - This document contains proprietary information owned by Hydranautics. All design, manufacturing, reproduction, distribution, use, patent rights, and sales rights regarding the same are reserved by Hydranautics.

Appendix A

Chemical Resistant Properties of HSM Modules during Cleanings at 25ºC*

Chemical	Concentration	Usage
Acids		
Acetic Acid	5 wt%	+
Acetic Acid	25 wt%	-
Acetic Acid	30 wt%	-
Acetic Acid	100 wt%	--
Nitric Acid	5 wt%	+
Nitric Acid	20 wt%	--
Phosphoric Acid	25 wt%	+
Phosphoric Acid	80 wt%	-
Sulfuric Acid	5 wt%	+
Sulfuric Acid	30 wt%	+
Hydrochloric Acid	5 wt%	+
Oxalic Acid	5 wt%	+
Citric Acid	5 wt%	+
Alkalis		
Sodium Hydroxide	30 wt%	--
Potassium Hydroxide	30 wt%	--
Aqueous Ammonia	25 wt%	--
Alcohols		
Methanol	100 wt%	--
Ethanol	20 wt%	++
Ethanol	95 wt%	--
IPA	50 wt%	-
Glycerin	100 wt%	+
Organic Solvents		
Esters	any	--
Ketones	any	--
Halogenated Hydrocarbons	any	--
Kerosene	any	--
Gasoline	any	--
Other Liquids		
Sodium Hypochlorite	10 mg/L	+
Sodium Hypochlorite	300 mg/L	+
Sodium Hypochlorite	3000 mg/L	+
Hydrogen Peroxide	10 wt%	+
Seawater	100 wt%	--
Ultrapure Water	100 wt%	++

++	Usable (less than 12 hours)
+	Usable for a short period of time (less than 2 hours)
-	Usable depending on the conditions
--	Unusable

*Some of these chemicals may be used in upstream processes of the plant, such as methanol for a carbon supplement, but may not be used directly for cleaning the membranes. Contact Hydranautics for chemical usage issues if there are any questions.

Proprietary - This document contains proprietary information owned by Hydranautics. All design, manufacturing, reproduction, distribution, use, patent rights, and sales rights regarding the same are reserved by Hydranautics.

10.31 - I1-1 – IFM COMPRESSED AIR METER

ifm electronic

CE

Operating instructions
Compressed air meter

efector300

SD0523

UK

80229559 / 00 06 / 2015

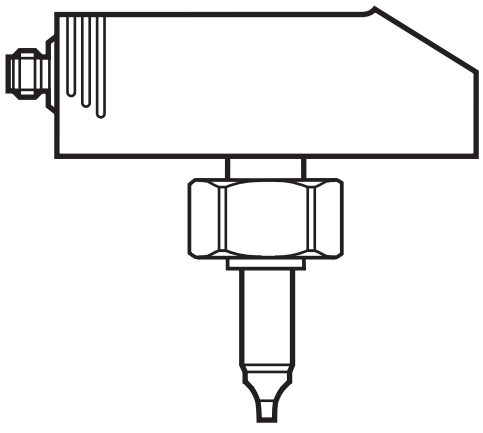

Contents

1 Preliminary note 4
1.1 Symbols used 4
2 Safety instructions 5
3 Functions and features 5
4 Function 6
4.1 Process measured signals 6
4.2 Volumetric flow monitoring 6
4.3 Consumed quantity monitoring 6
4.3.1 Consumed quantity monitoring with pulse output 7
4.3.2 Consumed quantity monitoring with preset counter 7
4.4 Temperature monitoring 7
4.5 Volumetric flow or temperature monitoring / switching function 8
4.5.1 Hysteresis function 8
4.5.2 Window function 8
4.6 Volumetric flow or temperature monitoring / analogue function 9
4.7 Adjustment to the internal pipe width 9
4.8 Set standard conditions of the volume flow 9
4.9 Low flow cut-off (LFC) 10
4.10 Customer-specific calibration (CGA) 10
5 Installation 10
5.1 Installation location 10
5.2 Installation conditions 11
5.3 Installation position 11
5.4 Installation example using the process adapter E40195 12
6 Electrical connection 13
7 Operating and display elements 14
8 Menu 15
8.1 Menu structure 15
8.2 Explanation of the menu 16
8.2.1 Extended functions (1) 16
8.2.2 Extended functions (2) 17
9 Parameter setting 17

9.1 IO-Link 17
9.1.1 General information 17
9.1.2 Device-specific information 17
9.1.3 Parameter setting tools 17
9.1.4 Adjustable parameters via IO-Link 17
9.2 Parameter setting in general 18
9.2.1 Extended menu 1 18
9.2.2 Extended menu 2 19
9.2.3 Locking / unlocking 19
9.2.4 Timeout 19
9.3 Settings for volumetric flow monitoring 20
9.3.1 Adjustment to the internal pipe width 20
9.3.2 Configure limit value monitoring with OUT1 20
9.3.3 Configure limit value monitoring with OUT2 20
9.3.4 Configure analogue value for volumetric flow 20
9.4 Settings for consumed quantity monitoring 21
9.4.1 Configure quantity monitoring via pulse output 21
9.4.2 Configure quantity monitoring via the preset counter 21
9.4.3 Setting the pulse value 22
9.4.4 Configure program-controlled meter reset 22
9.4.5 Deactivate meter reset 23
9.4.6 Configure meter reset using an external signal 23
9.5 Settings for temperature monitoring 23
9.5.1 Configure limit value monitoring with OUT2 23
9.5.2 Configure analogue value for temperature 23
9.6 User settings (optional) 24
9.6.1 Set standard unit of measurement for volumetric flow 24
9.6.2 Configure standard display 24
9.6.3 Set output status in fault condition 24
9.6.4 Set measured value damping 24
9.6.5 Set low flow cut-off 25
9.6.6 Calibrate curve of measured values 25
9.6.7 Reset calibration data 25
9.6.8 Set standard pressure which serves as a reference for measured and display values for volumetric flow 25
9.6.9 Set standard temperature which serves as a reference for measured and display values for volumetric flow 25

9.7 Service functions 25
9.7.1 Read min/max values for volumetric flow 25
9.7.2 Reset all parameters to factory setting 26
10 Operation 26
10.1 Read set parameters 26
10.2 Change display unit in the Run mode 26
10.3 Fault indications 27
10.4 General operating conditions 27
11 Technical data and scale drawing 27
12 Factory setting 27

1 Preliminary note

1.1 Symbols used

▶ Instructions

> Reaction, result

[…] Designation of pushbuttons, buttons or indications

→ Cross-reference

Important note
Non-compliance can result in malfunction or interference.

Information.
Supplementary note.

2 Safety instructions

- Please read this document prior to set-up of the unit. Ensure that the product is suitable for your application without any restrictions.
- If the operating instructions or the technical data are not adhered to, personal injury and/or damage to property can occur.
- Ensure before mounting the components into or removing them from the compressed air system that the installation is at a standstill and no pressure is applied.
- Improper or non-intended use may lead to malfunctions of the unit or to unwanted effects in your application. That is why installation, electrical connection, set-up, operation and maintenance of the unit must only be carried out by qualified personnel authorised by the machine operator.
- In order to guarantee the correct condition of the device for the operating time the device must only be used in media to which the wetted parts are sufficiently resistant (→ Technical data).
- The responsibility whether the measurement devices are suitable for the respective application lies with the operator. The manufacturer assumes no liability for consequences of misuse by the operator. Improper installation and use of the devices result in a loss of the warranty claims.

3 Functions and features

The unit monitors the standard volume flow of compressed air in industrial use.

It detects the 4 process variables flow velocity, volumetric flow quantity, consumed quantity, medium temperature.

- Application: compressed air systems in industrial use.
- All indications apply for standard volume flow to DIN ISO 2533, i.e. volume flow at 1013 hPa, 15 °C and 0 % relative air humidity.
  The unit can be set to different standard conditions (→ 9.6.8 and → 9.6.9).
- The general operating conditions of compressed air equipment apply.

4 Function

4.1 Process measured signals

- The unit displays the current process values.
- It generates 2 output signals according to the parameter setting.

OUT1: 4 selection options	Parameter setting
- Switching signal for volumetric flow quantity limit value	(→ 9.3.2)
- or switching signal for flow velocity	(→ 9.3.2)
- or pulse signal for quantity meter	(→ 9.4.1)
- or switching signal for preset counter	(→ 9.4.2)

OUT2: 6 selection options	Parameter setting
- Switching signal for volumetric flow quantity limit value	(→ 9.3.3)
- or switching signal for flow velocity limit value	(→ 9.3.3)
- or switching signal for temperature limit value	(→ 9.5.1)
- or analogue signal for volumetric flow quantity	(→ 9.3.4)
- or analogue signal for flow velocity	(→ 9.3.4)
- or analogue signal for temperature	(→ 9.5.2)
If not used as an output, OUT2 (pin 2) can instead be used as an input for an external reset signal.	(→ 9.4.6)

4.2 Volumetric flow monitoring

The volumetric flow is monitored by a calorimetric measuring system, the measured signals are evaluated by the electronics.

- 2 switching signals for volumetric flow limit values can be provided (output 1 and output 2). On the switching functions → 4.5.
- An analogue signal which is proportional to the volumetric flow (4...20 mA) can be provided on output 2. On the analogue functions → 4.6.

4.3 Consumed quantity monitoring

The unit has an internal quantity meter which continuously totals the volumetric flow quantity. The sum corresponds to the current consumed quantity since the last reset.

- The current meter reading can be displayed.

- In addition the value before the last reset is saved. This value can also be displayed.
  The meter saves the totalled consumed quantity every 10 minutes. After a power failure this value is available as the current meter reading. If a time-controlled reset is set, the elapsed time of the set reset interval is also saved. So the possible data loss can be maximum 10 minutes.
- Overflow: After the maximum value (9 999 999 Nm^3) the meter is reset to 0.

The meter can be reset as follows:

- Manual reset (→ 9.4.4).
- Time-controlled automatic reset (→ 9.4.4).
- External input signal on pin 2 (→ 9.4.6).

4.3.1 Consumed quantity monitoring with pulse output

Output 1 provides a counting pulse each time the value set in [ImPS] is reached (→ 9.4.1).

4.3.2 Consumed quantity monitoring with preset counter

2 types of monitoring are possible:

- Time-dependent quantity monitoring.
  - Settings: [ImPS] = quantity x, [ImPR] = [no], [rTo] = time t.
  - If the quantity x is reached during t, output 1 switches and remains switched until the counter is reset.
  - If the quantity x is not reached after the time t has elapsed, the meter is automatically reset and counting starts again; output 1 does not switch.
- Non time-dependent quantity monitoring.
  - Settings: [ImPS] = quantity x, [ImPR] = [no], [rTo] = [OFF].
  - If the quantity x is reached, output 1 switches and remains switched until the counter is reset.

4.4 Temperature monitoring

- A switching signal for temperature limit values can be provided on output 2. On the switching functions → 4.5.
- An analogue signal which is proportional to the temperature (4...20 mA) can be provided on output 2. On the analogue functions → 4.6.

4.5 Volumetric flow or temperature monitoring / switching function

OUTx changes its switching state if it is above or below the set switching limits (SPx, rPx). The following switching functions can be selected:

4.5.1 Hysteresis function

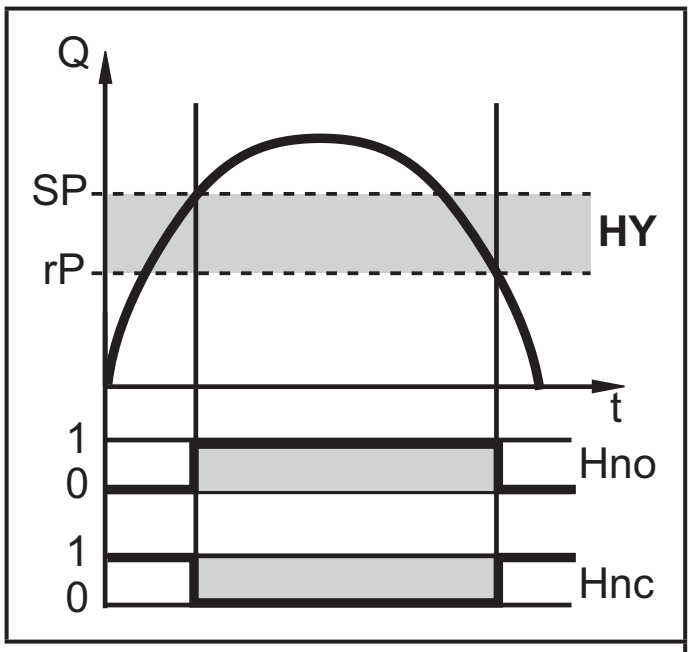

HY = hysteresis

Normally open: [OUx] = [Hno]

Normally closed: [OUx] = [Hnc]

First the set point (SPx) is set, then the reset point (rPx) with the requested difference.

4.5.2 Window function

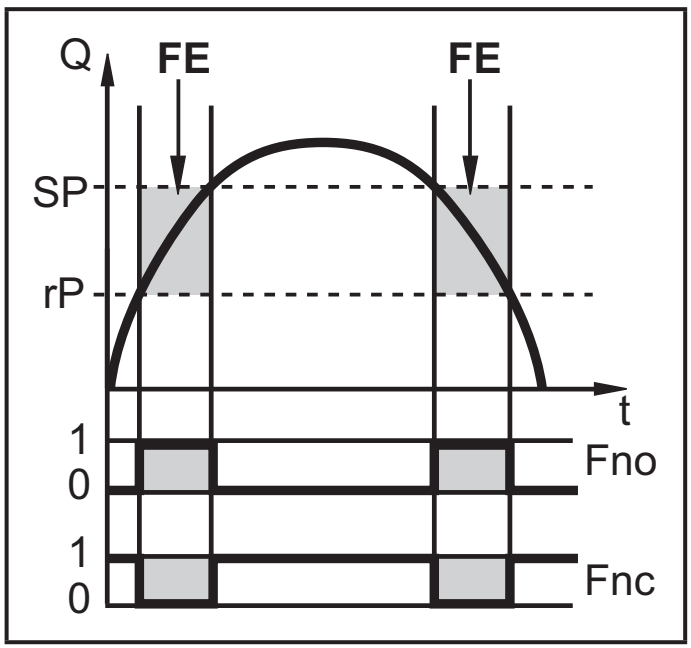

FE = window

Normally open: [OUx] = [Fno]

Normally closed: [OUx] = [Fnc]

The width of the window can be set by means of the difference between SPx and rPx.
SPx = upper value
rPx = lower value.

4.6 Volumetric flow or temperature monitoring / analogue function

- Analogue start point [ASP] determines at which measured value the output signal is 4 mA.
- Analogue end point [AEP] determines at which measured value the output signal is 20 mA.

Minimum distance between [ASP] and [AEP] = 25 % of the final value of the measuring range.

Example of volumetric flow monitoring:

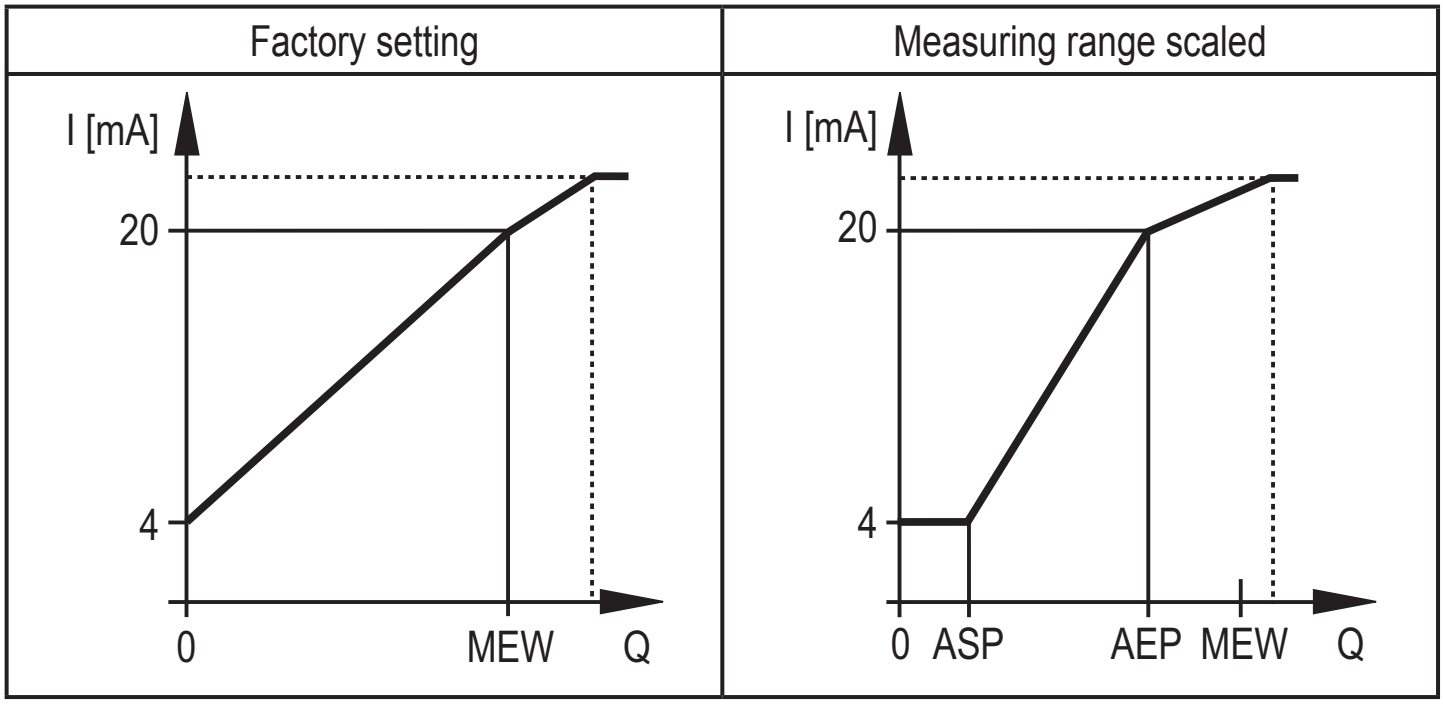

MEW = final value of the measuring range
In the set measuring range the output signal is between 4 mA and 20 mA.
It is also indicated:
Volumetric flow above the measuring range: output signal > 20 mA.

4.7 Adjustment to the internal pipe width

The unit can be used for different internal pipe widths. The selected internal pipe width must be set via the menu (→ 9.3.1 Adjustment to the internal pipe width).

Set the internal pipe widths before defining values for switching limits (SPx, rPx) and analogue limit values (ASP, AEP).

4.8 Set standard conditions of the volume flow

The unit is adjusted to a standard volume flow to DIN ISO 2533, i.e. volume flow at 1013 hPa, 15 °C and 0 % relative air humidity.

The unit can be set to different standard conditions:

- Via the menu item [rEF.P] the standard pressure is set, which serves as a reference for the measured and display values for volumetric flow (→ 9.6.8).
- Via the menu item [rEF.T] the standard temperature is set, which serves as a reference for the measured and display values for volumetric flow (→ 9.6.9).

4.9 Low flow cut-off (LFC)

With this function small volumetric flow quantities can be ignored (→ 9.6.5). Flows below the LFC value have no effect on the display and output signals.

4.10 Customer-specific calibration (CGA)

The customer-specific calibration allows changing the gradient of the curve of measured values. It influences the display and the outputs.

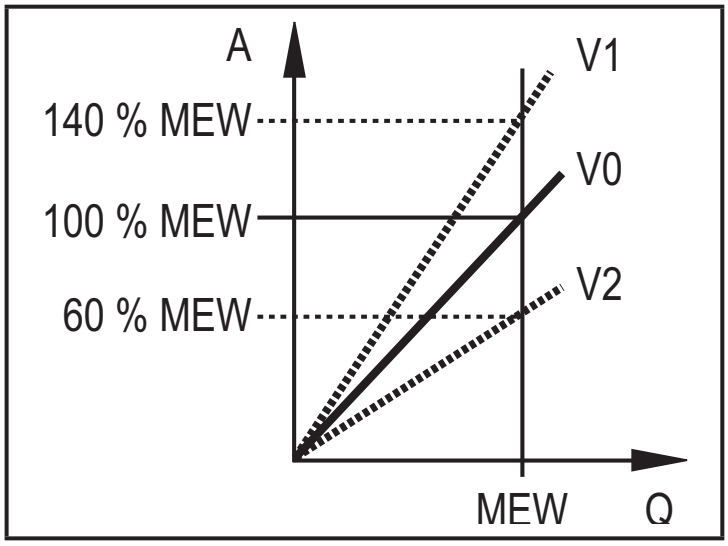

A	Operating value for display and output signals
Q	Volumetric flow
MEW	Final value of the measuring range
V0	Curve of measured values with factory setting
V1, V2	Curve of measured values after calibration

The change in the gradient is indicated in per cent. Factory setting = 100 %. After a change the calibration can be reset to factory setting (→ 9.6.7).

5 Installation

The rules and regulations for the installation and operation of compressed air equipment must be observed.

Installation in pipes:

► Insert the unit into a G1 process adapter and tighten the nut. Tightening torque max. 50 Nm. Ensure that the unit is correctly oriented.

5.1 Installation location

- Downstream of the cold dryer / near the load.
- If compressed air is fed into the main pipe through parallel pipes, the unit should be mounted in the main pipe.

- Installation downstream of the maintenance unit is also possible (if oil is used for the loads, the units must be mounted upstream of the oiler).

5.2 Installation conditions

Recommendation:

▶ Use a straight inlet pipe with a length of 20 x pipe diameter.

▶ In case of disturbances on the inlet side caused by elbows, valves, slides etc. use an inlet pipe with a length of 50 x pipe diameter.

▶ Use a straight outlet pipe with a length of 5 x pipe diameter.

5.3 Installation position

- Permitted installation positions: pipe length vertical, any position (fig. 1, 2); pipe length horizontal, unit vertical (fig. 3, 5); unit on side, pipe length left (fig. 4).
- Avoid the installation position in fig. 6 (unit on side, pipe length right). If the flow rate is low, the specified measurement accuracy cannot be adhered to.

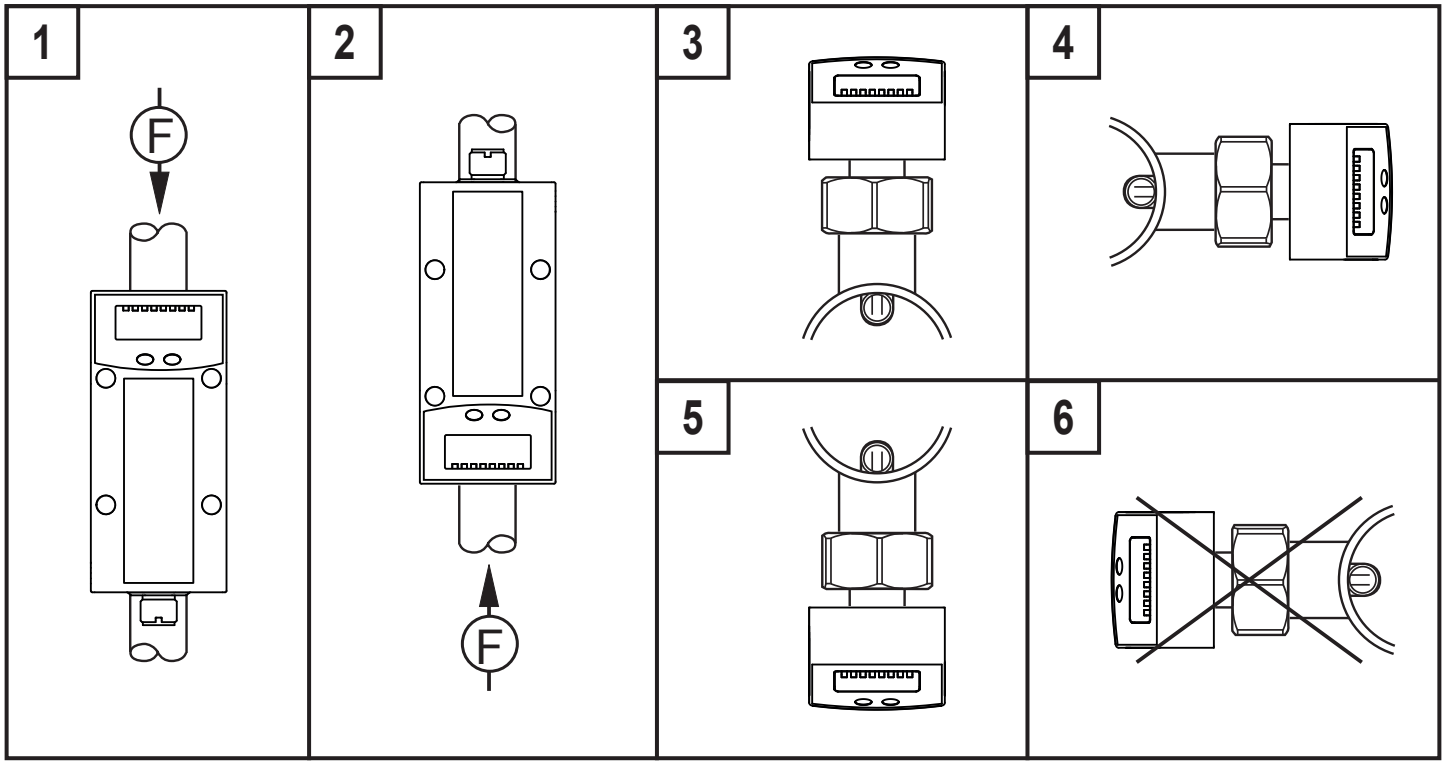

5.4 Installation example using the process adapter E40195

For an ideal alignment of the sensor's measuring probe to the direction of flow of the medium (fig. 4), observe the following notes on welding of the E40195 process adapter into the pipe:

- ▶ Drill a hole for the process adapter into the pipe and remove all burrs.
- ▶ Align the adapter with the alignment mark at a max. offset of ± 2° to the pipe axis (fig. 1 and 2).
- ▶ Ensure that the adapter does not extend into the pipe (fig. 2).
- ▶ Install the adapter precisely vertically in the pipe (fig. 3).

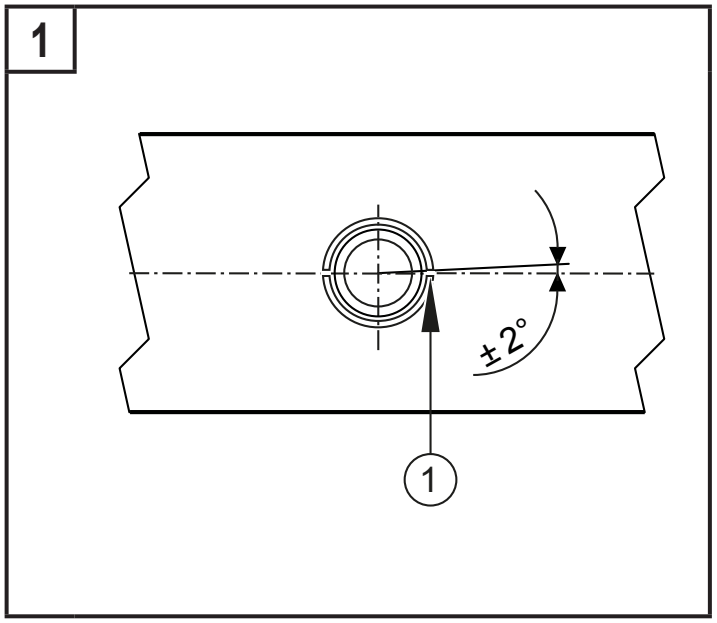

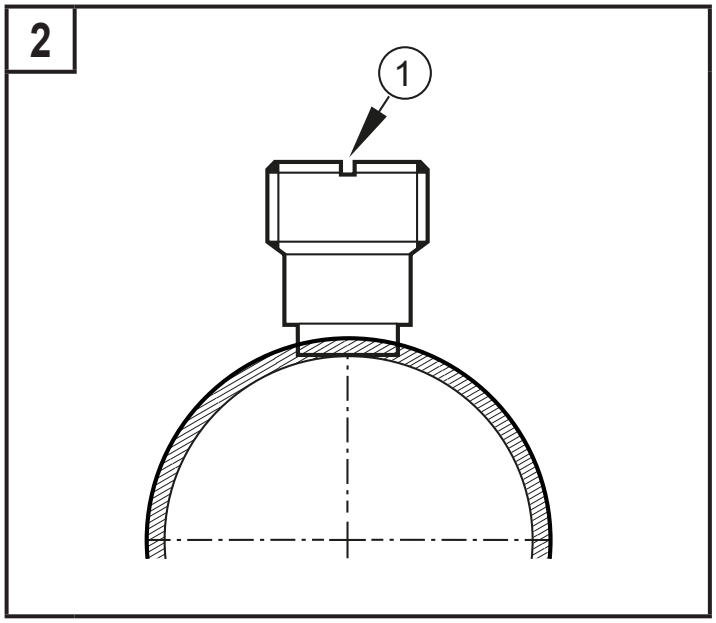

1: Alignment mark

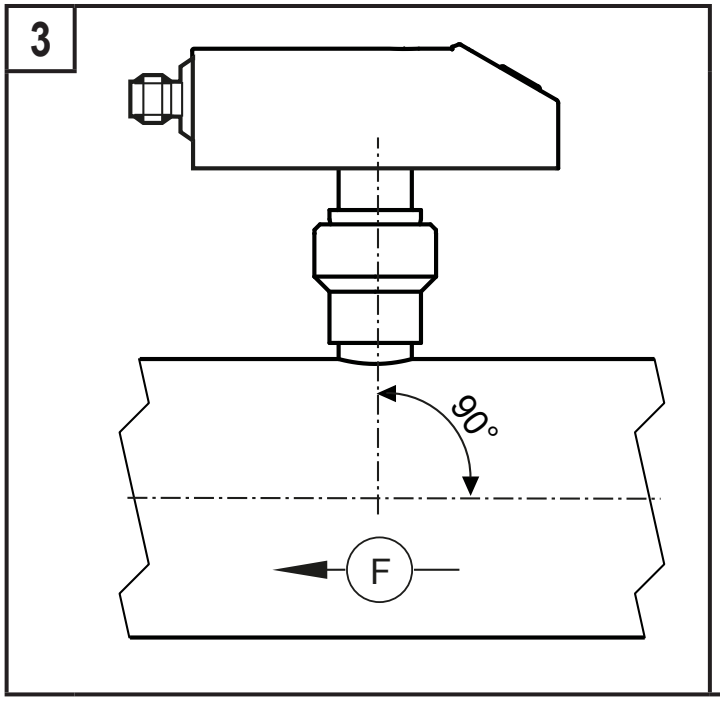

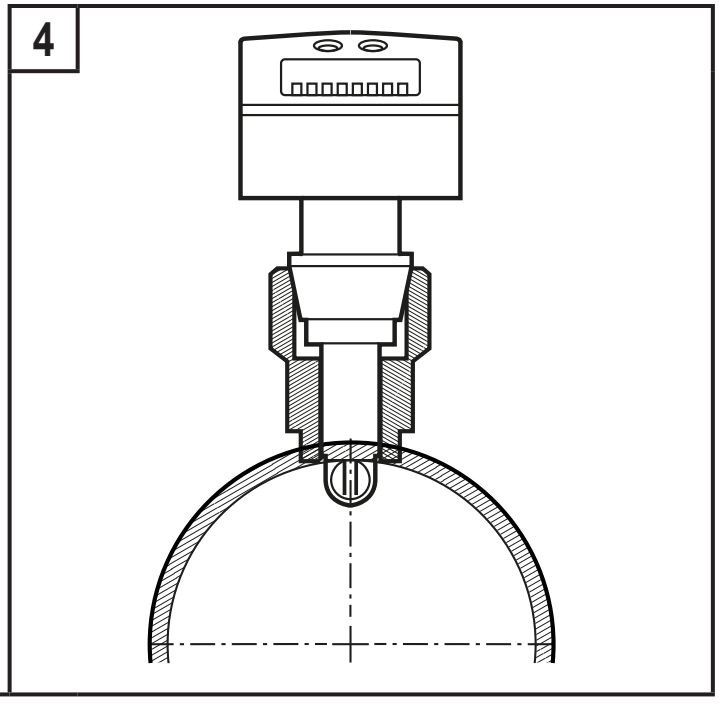

6 Electrical connection

The unit must be connected by a qualified electrician.

The national and international regulations for the installation of electrical equipment must be adhered to.

Voltage supply according to EN 50178, SELV, PELV.

▶ Disconnect power.

▶ Connect the unit as follows:

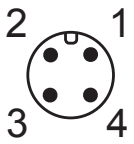

BK: black
BN: brown
BU: blue
WH: white

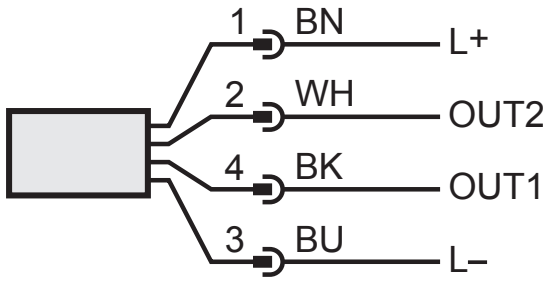

Colours to DIN EN 60947-5-2

Sample circuits:

2 x positive switching

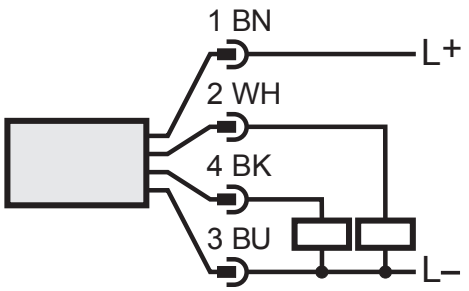

1 x positive switching / 1 x analogue

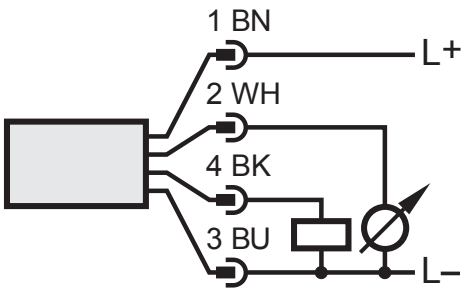

Pin 1	L+
Pin 3	L-
Pin 4 (OUT1)	• Switching signal: limit values for volumetric flow. • Switching signal: quantity meter reached preset value. • Pulses: 1 pulse every time the defined volumetric flow quantity is reached. • IO-Link
Pin 2 (OUT2/InD)	• Switching signal: limit values for volumetric flow. • Switching signal: limit values for temperature. • Analogue signal for volumetric flow. • Analogue signal for temperature. • Input for signal "meter reset".

7 Operating and display elements

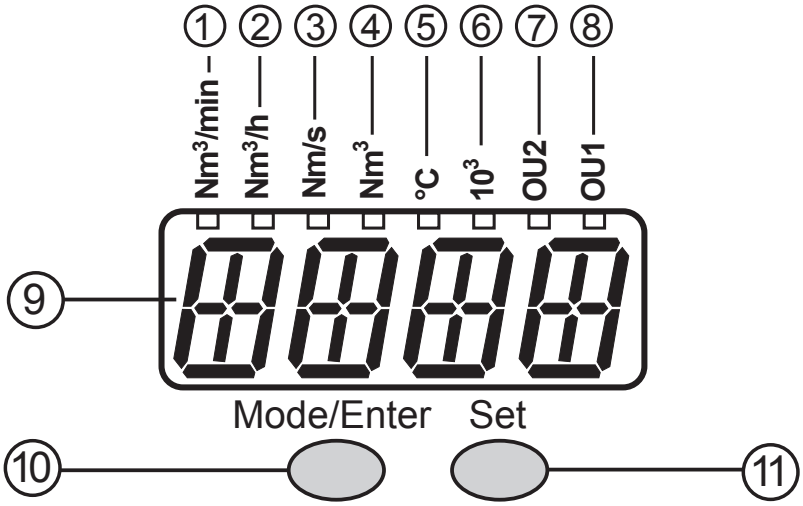

1 to 8: indicator LEDs
- LED 1 = current volumetric flow in standard cubic metres/minute(Nm^3/min). - LED 2 = current volumetric flow in standard cubic metres/hour (Nm^3/h). - LED 3 = current flow velocity in standard metres/second (Nm/s). - LED 4 = current consumed quantity since the last reset in standard cubic metres (Nm^3). - LED 4 flashing = consumed quantity before the last reset in standard cubic metres (Nm^3). - LED 4 and 6 = current consumed quantity since the last reset in 10^3 standard cubic metres. - LED 4 and 6 flashing = consumed quantity before the last reset in 10^3 cubic metres. - LED 5 = current medium temperature in °C. - LED 7, LED 8 = switching state of the corresponding output.
9: Alphanumeric display, 4 digits
- Indication of the current volumetric flow quantity (if [SELd] = [FLOW] is set). - Indication of the meter reading (if [SELd] = [TOTL] is set). - Indication of the current medium temperature (→ 10.2). - Indication of the parameters and parameter values.
10: Mode/Enter button
- Selection of the parameters and acknowledgement of the parameter values.
11: Set button
- Setting of the parameter values (scrolling by holding pressed; incrementally by pressing once). - Change of the display unit in the normal operating mode (Run mode).

8 Menu

8.1 Menu structure

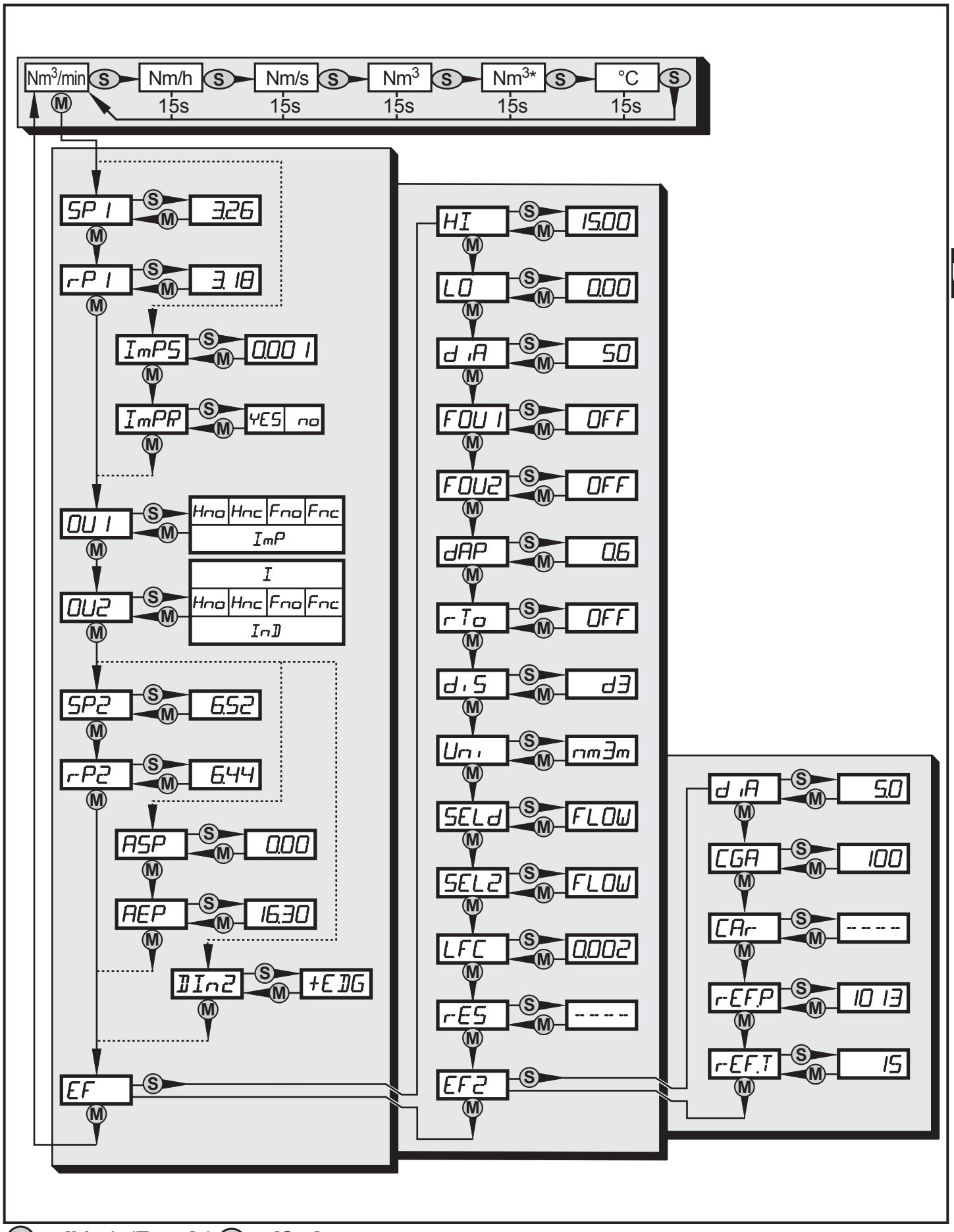

UK

Ⓜ = [Mode/Enter] / Ⓢ = [Set]

Nm^3 = current meter reading in Nm^3/ Nm^3* = saved meter reading in Nm^3

8.2 Explanation of the menu

SP1/rP1	Upper / lower limit value for volumetric flow.
ImPS	Pulse value.
ImPR	Pulse repetition active (= pulse output) or not active (= preset counter function).
OU1	Output function for OUT1 (volumetric flow or consumed quantity): - Switching signal for the limit values: hysteresis function or window function, either normally open or normally closed. - Pulse or switching signal for quantity meter.
OU2	Output function for OUT2 (volumetric flow or temperature): - Switching signal for the limit values: hysteresis function or window function, either normally open or normally closed. - Analogue signal: 4-20 mA [I].
	As an alternative: configure OUT2 (pin 2) as input for external reset signal: Setting: [OU2] = [InD].
SP2/rP2	Upper / lower limit value for volumetric flow or temperature.
ASP / AEP	Analogue start value / analogue end value for volumetric flow or temperature.
DIn2	Configure the input (pin 2) for meter reset.

8.2.1 Extended functions (1)

EF	Extended menu
HI / LO	Maximum / minimum value memory for volumetric flow.
diA	Indication of the internal pipe diameter in mm.
FOU1	Status of output 1 in case of an internal fault.
FOU2	Status of output 2 in case of an internal fault.
dAP	Measured value damping / damping constant in seconds.
rTo	Meter reset: manual reset / time-controlled reset.
diS	Update rate and orientation of the display.
Uni	Standard unit of measurement for volumetric flow: Nm^3/min or Nm/s.
SELd	Standard measured variable of the display: volumetric flow value, meter reading or medium temperature.
SEL2	Standard measured variable for evaluation by OUT2: - Limit value signal or analogue signal for volumetric flow. - Limit value signal or analogue signal for temperature.
LFC	Low flow cut-off.
rES	Restore factory setting.

8.2.2 Extended functions (2)

EF2	Extended menu 2.
diA	Setting of the inner pipe diameter in mm.
CGA	Calibration of the curve of measured values: define gradient.
CAR	Reset the calibration data.
rEF.P	Standard pressure which serves as a reference for measured and display values for volumetric flow.
rEF.T	Standard temperature which serves as a reference for measured and display values for volumetric flow.

9 Parameter setting

During parameter setting the unit remains in the operating mode. It continues to monitor with the existing parameters until the parameter setting has been completed.

9.1 IO-Link

9.1.1 General information

This unit has an IO-Link communication interface which requires an IO-Link-capable module (IO-Link master) for operation.

The IO-Link interface enables direct access to the process and diagnostic data and provides the possibility to set the parameters of the unit during operation.

In addition communication is possible via a point-to-point connection with a USB adapter cable.

You will find more detailed information about IO-Link at www.ifm.com/gb/io-link.

9.1.2 Device-specific information

You will find the IODDs necessary for the configuration of the IO-Link unit and detailed information about process data structure, diagnostic information and parameter addresses at www.ifm.com/gb/io-link.

9.1.3 Parameter setting tools

You will find all necessary information about the required IO-Link hardware and software at www.ifm.com/gb/io-link.

9.1.4 Adjustable parameters via IO-Link

- Inner pipe diameter [diA]
- Meter reset [rTo]

9.2 Parameter setting in general

3 steps must be taken for each parameter setting:

1	**Select the parameter** ▶ Press [Mode/Enter] until the requested parameter is displayed.	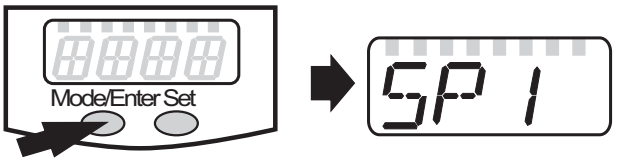
2	**Set the parameter value** ▶ Press and hold [Set]. > Current setting value of the parameter flashes for 5 s. > After 5 s: setting value is changed: incrementally by pressing once or scrolling by holding pressed.	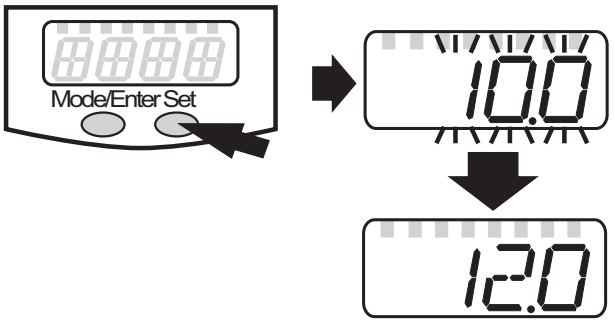
	Numerical values are incremented continuously. To reduce the value: let the display move to the maximum setting value. Then the cycle starts again at the minimum setting value.	
3	**Confirm the parameter value** ▶ Briefly press [Mode/Enter]. > The parameter is displayed again. The new setting value is saved.	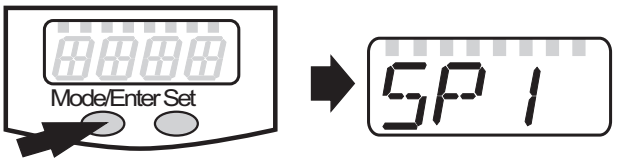
Set other parameters ▶ Start again with step 1.		
Finish parameter setting ▶ Press [Mode/Enter] several times until the current measured value is displayed or wait for 15 s. > The unit returns to the operating mode.		

If [S.Loc] is displayed when an attempt is made to modify a parameter value, either an IO-Link communication is active (temporary locking) or the sensor is permanently locked via software. This locking can only be removed with a parameter setting software.

9.2.1 Extended menu 1

▶ Press [Mode/Enter] until [EF] is displayed.	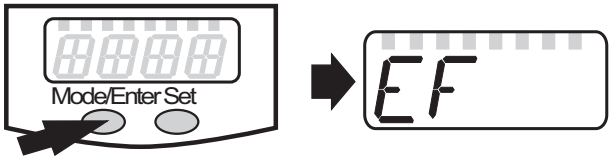

▶ Press [Set] briefly. > The first parameter of the submenu is displayed (here: [HI]).	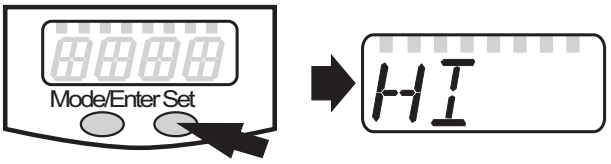

9.2.2 Extended menu 2

▶ Press [Mode/Enter] until [EF] is displayed.

▶ Press [Set] briefly.

> [EF2] is displayed.

▶ Press [Set] briefly.

> The first parameter of the extended menu [diA] is displayed.

If the extended menu is protected by an access code, [Cod] flashes in the display.

▶ Press and hold [Set] until the valid code no. is displayed.

▶ Briefly press [Mode/Enter].

9.2.3 Locking / unlocking

The unit can be locked electronically to prevent unintentional settings.

▶ Make sure that the unit is in the normal operating mode. ▶ Press [Mode/Enter] + [Set] for 10 s. > [Loc] is displayed.	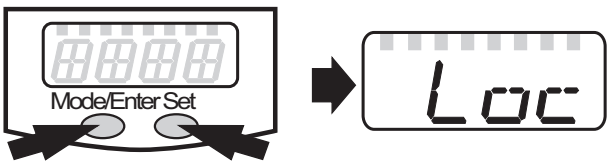
During operation: [LOC] is briefly displayed if you try to change parameter values.	
For unlocking: ▶ Press [Mode/Enter] + [Set] for 10 s. > [uLoc] is displayed.	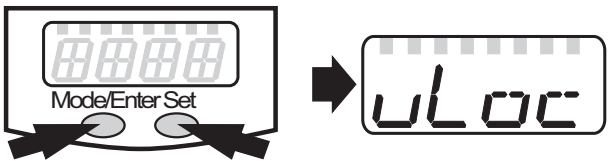

Factory setting: not locked.

9.2.4 Timeout

If no button is pressed for 15 s during parameter setting, the unit returns to the operating mode with unchanged values.

9.3 Settings for volumetric flow monitoring

9.3.1 Adjustment to the internal pipe width

▶ Select [diA] and set a numerical value in mm. Set the internal pipe widths before defining values for switching limits (SPx, rPx) and analogue limit values (ASP, AEP).	

9.3.2 Configure limit value monitoring with OUT1

▶ Select [Uni] and set the unit of measurement (→ 9.6.1). ▶ Select [OU1] and set the switching function. - [Hno] = hysteresis function/normally open. - [Hnc] = hysteresis function/normally closed. - [Fno] = window function/normally open. - [Fnc] = window function/normally closed. ▶ Select [SP1] and set the value at which the output switches. ▶ Select [rP1] and set the value at which the output resets.	

9.3.3 Configure limit value monitoring with OUT2

▶ Select [Uni] and set the unit of measurement (→ 9.6.1). ▶ Select [SEL2] and set [FLOW]. ▶ Select [OU2] and set the switching function. - [Hno] = hysteresis function/normally open. - [Hnc] = hysteresis function/normally closed. - [Fno] = window function/normally open. - [Fnc] = window function/normally closed. ▶ Select [SP2] and set the value at which the output switches. ▶ Select [rP2] and set the value at which the output resets.	

9.3.4 Configure analogue value for volumetric flow

▶ Select [Uni] and set the unit of measurement (→ 9.6.1). ▶ Select [SEL2] and set [FLOW]. ▶ Select [OU2] and set the function. - [I] = current signal proportional to volumetric flow (4…20 mA). ▶ Select [ASP] and set the value at which the minimum value is provided. ▶ Select [AEP] and set the value at which the maximum value is provided.	

9.4 Settings for consumed quantity monitoring

9.4.1 Configure quantity monitoring via pulse output

▶ Select [OU1] and set [ImP]. ▶ Select [ImPS] and set the volumetric flow quantity at which 1 pulse is provided (→ 9.4.3). ▶ Select [ImPR] and set [YES] > Pulse repetition is active. Output 1 provides a counting pulse each time the value set in [ImPS] is reached.	

9.4.2 Configure quantity monitoring via the preset counter

▶ Select [OU1] and set [ImP]. ▶ Select [ImPS] and set the volumetric flow quantity at which output 1 switches (→ 9.4.3). ▶ Select [ImPR] and set [no] > Pulse repetition is not active. The output switches ON if the value set in [ImPS] is reached. It remains switched until the counter is reset.	

9.4.3 Setting the pulse value

▶ Select [ImPS].
▶ Press and hold [Set].
> The current numerical value flashes for 5 s, then one of the 4 digits becomes active and can be changed as below:

1. Briefly press [Set]
   > Active figure is changed.
2. Keep [Set] pressed
   > The next figure on the left becomes active.

   - After the cycle of the figures on the left on the display the display changes to the next higher setting range (decimal point shifts or LED changes).
   - Change to the lower setting range: Keep [Set] pressed until the display moves through all ranges and jumps back to the start value.
3. Wait without pressing a button
   > The next figure on the right becomes active.

▶ Briefly press [Mode/Enter] when all 4 digits are set.

Setting ranges:

LED	Display	Value	Step increment
4	0 0 0 1 ... 9 9 9 9	1...9999 Nm³	1 Nm³
4 + 6	1 0 .0 0 ... 9 9 .9 9	10 000...99 990 Nm³	10 Nm³
4 + 6	1 0 0 .0 ... 9 9 9 .9	100 000...999 900 Nm³	100 Nm³
4 + 6	1 0 0 0 ... 1 0 0 0	1 000 000 Nm³	

9.4.4 Configure program-controlled meter reset

▶ Select [rTO] and continue with a) or b).
a) Reset the meter manually:
▶ Press [SET] until [rES.T] is displayed, then briefly press [Mode/Enter].
b) Enter the value for time-controlled reset
▶ Press [Set] until the requested value is displayed (intervals from 1 hour to 8 weeks), then briefly press [Mode/Enter].

9.4.5 Deactivate meter reset

▶ Select [rTo] and set [OFF] The meter is only reset after overflow (= factory setting). Overflow: After the maximum value (9 999 999 Nm³) the meter is reset to 0.	

9.4.6 Configure meter reset using an external signal

▶ Select [OU2] and set [InD] ▶ Select [Din2] and set the reset signal - [HIGH] = reset for high signal - [LOW] = reset for low signal - [+EDG] = reset for rising edge - [-EDG] = reset for falling edge	

UK

9.5 Settings for temperature monitoring

9.5.1 Configure limit value monitoring with OUT2

▶ Select [SEL2] and set [TEMP]. ▶ Select [OU2] and set the switching function. - [Hno] = hysteresis function/normally open. - [Hnc] = hysteresis function/normally closed. - [Fno] = window function/normally open. - [Fnc] = window function/normally closed. ▶ Select [SP2] and set the value at which the output switches. ▶ Select [rP2] and set the value at which the output resets.	

9.5.2 Configure analogue value for temperature

▶ Select [SEL2] and set [TEMP]. ▶ Select [OU2] and set the function. - [I] = temperature-proportional current signal (4…20 mA). ▶ Select [ASP] and set the value at which the minimum value is provided. ▶ Select [AEP] and set the value at which the maximum value is provided.	

9.6 User settings (optional)

9.6.1 Set standard unit of measurement for volumetric flow

▶ Select [Uni] and set the unit of measurement - [nm3m] = volumetric flow quantity in standard cubic metres/minute - [nm3h] = volumetric flow quantity in standard cubic metres/hour - [nmS] = flow velocity in standard metres / second The setting only has an effect on the volumetric flow value. The meter reading (consumed quantity) is automatically displayed in the unit of measurement providing the highest accuracy.	

9.6.2 Configure standard display

▶ Select [SELd] and set the standard unit of measurement: - [FLOW] = the current volumetric flow value in the standard unit of measurement is displayed. - [TOTL] = the current meter reading in Nm^3 or $Nm^3 \times 10^3$ is displayed. - [TEMP] = the current medium temperature in °C is displayed. ▶ Select [diS] and set the update rate and orientation of the display: - [d1] = update of the measured values every 50 ms. - [d2] = update of the measured values every 200 ms. - [d3] = update of the measured values every 600 ms. - [rd1], [rd2], [rd3] = display as for d1, d2, d3; rotated by 180°. - [OFF] = the display is switched off in the operating mode.	

9.6.3 Set output status in fault condition

▶ Select [FOU1] and set the value: - [On] = output 1 switches ON in case of a fault. - [OFF] = output 1 switches OFF in case of a fault. - [OU] = output 1 switches irrespective of the fault as defined with the parameters. ▶ Select [FOU2] and set the value: - [On] = output 2 switches ON in case of a fault, the analogue signal goes to the upper final value. - [OFF] = output 2 switches OFF in case of a fault, the analogue signal goes to the lower final value. - [OU] = output 2 switches irrespective of the fault as defined with the parameters. The analogue signal corresponds to the measured value.	

9.6.4 Set measured value damping

▶ Select [dAP] and set the damping constant in seconds (t value 63 %).	

9.6.5 Set low flow cut-off

▶ Select [LFC] and set the limit value Flows below the LFC value have no effect on the display and output signals.	

9.6.6 Calibrate curve of measured values

▶ Select [CGA] and set a percentage between 60 and 140 (100 = factory setting).	

9.6.7 Reset calibration data

▶ Select [CAr]. ▶ Press and hold [SET] until [----] is displayed. ▶ Briefly press [Mode/Enter]. > The values are reset to the factory setting (CGA = 100).	

9.6.8 Set standard pressure which serves as a reference for measured and display values for volumetric flow

▶ Select [rEF.P] and set the requested standard pressure Setting range: 950...1050 hPa in steps of 1 hPa	

9.6.9 Set standard temperature which serves as a reference for measured and display values for volumetric flow

▶ Select [rEF.T] and set the requested standard temperature Setting range: 0...25 °C in steps of 1 °C	

9.7 Service functions

9.7.1 Read min/max values for volumetric flow

▶ Select [HI] or [LO], briefly press [Set]. [HI] = maximum value, [LO] = minimum value. Delete memory: ▶ Select [HI] or [LO]. ▶ Press and hold [Set] until [----] is displayed. ▶ Briefly press [Mode/Enter]. It makes sense to delete the memories as soon as the unit operates under normal operating conditions for the first time.	

9.7.2 Reset all parameters to factory setting

▶ Select [rES]. ▶ Press and hold [Set] until [----] is displayed. ▶ Briefly press [Mode/Enter]. Recommendation: ▶ Before the reset note down your factory settings. → 12 Factory setting.	

10 Operation

Correct operation and compliance with the measurement accuracy can only be ensured if the environmental conditions specified in the technical data ((→ www.ifm.com → Data sheet search → Enter article number) are adhered to. Ensure that the maximum pressure range, measuring range and permitted ambient temperature are not exceeded.

After power-on and expiry of the power-on delay time (approx. 0.5 s) the unit is in the Run mode (= normal operating mode). It carries out its measurement and evaluation functions and generates output signals according to the set parameters.

- Operating indicators → 7 Operating and display elements.
- During the power-on delay time the outputs are switched as programmed: ON for normally open function (Hno, Fno), OFF for normally closed function (Hnc, Fnc).
- If output 2 is configured as analogue output, the output signal is at the final value of the measuring range during the power-on delay time.

10.1 Read set parameters

▶ Press [Mode/Enter] until the requested parameter is displayed.

▶ Press [Set] briefly.

> The unit displays the corresponding parameter value. After about 15 s it again displays the parameter, then it returns to the Run mode.

10.2 Change display unit in the Run mode

▶ Press [Set] briefly in the Run mode. Press the button to move to the next display unit.

> The unit displays the current measured value in the selected display unit for approx. 15 s, the corresponding LED is lit.

10.3 Fault indications

[SC1]	Short circuit in OUT1.*
[SC2]	Short circuit in OUT2.*
[SC]	Short circuit in both outputs.*
[OL]	Measured value > 120 % of the final value of the measuring range.
[UL]	Measured value < initial value of the measuring range.
[Err]	Flashing: fault in the measuring probe.

*The output concerned is switched off as long as the short circuit exists.
These messages are displayed even if the display is switched off.

10.4 General operating conditions

The unit is maintenance-free for media which do not stick to the measuring probes.

- From time to time check the measuring probes visually for build-up.
- If necessary, clean them at regular intervals. To do so, use a suitable cleaning liquid (e.g. alcoholic solution).
- Avoid mechanical damage to the measuring probes.

11 Technical data and scale drawing

Technical data and scale drawing at www.ifm.com.

12 Factory setting

	Factory setting	User setting
SP1	**422**	
rP1	**412**	
ImPS	**1**	
ImPR	**YES**	
OU1	**Hno**	
OU2	**I**	
SP2 (FLOW)	**844**	

rP2 (FLOW)	**834**	
SP2 (TEMP)	**24.0**	
rP2 (TEMP)	**23.8**	
ASP (FLOW)	**0.00**	
AEP (FLOW)	**2110**	
ASP (TEMP)	**0.0**	
AEP (TEMP)	**60.0**	
DIn2	**+EDG**	
FOU1	**OFF**	
FOU2	**OFF**	
dAP	**0.6**	
rTo	**OFF**	
diS	**d3**	
Uni	**nm3h**	
SELd	**FLOW**	
SEL2	**FLOW**	
LFC	**0.04**	
diA	**72**	
CGA	**100**	
rEF.P	**1013**	
rEF.T	**15**	

10.32 - I1-2 – IFM COMPRESSED AIR METER

SD2001

SDN21DGXFPKG/US-100

Capteurs de débit

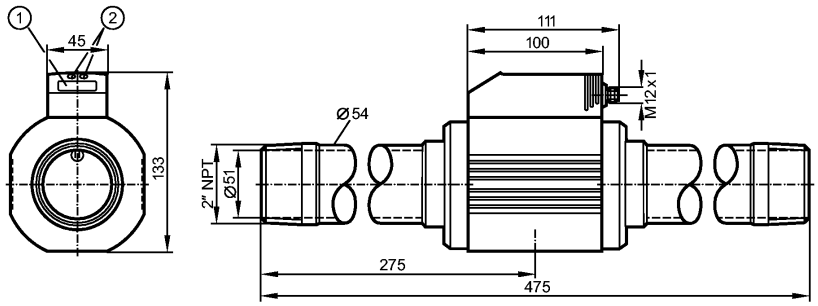

1: Visualisation alphanumérique à 4 digits
2: Boutons-poussoirs de programmation

Made in Germany

CE cULus LISTED CRN

Caractéristiques du produit

Compteur d'air comprimé

Raccordement par connecteur

Raccord process: 2" NPT (DN50)

Fonction programmable

2 sorties
OUT1 = contrôle de débit (sortie TOR), compteur volumétrique (impulsions), compteur à présélection (sortie TOR)
OUT2 = contrôle de débit (sortie analogique ou TOR)

Plage évaluable

0,0...494,4 scfm

Etendue de mesure

1,4...412,0 scfm *)

Indication température

32...140 °F

Application

Application		Air comprimé de fonctionnement Qualité d'air (ISO 8573-1): Classe 141 (erreur de mesure: voir ci-dessous, valeur A) Classe 344 (erreur de mesure: voir ci-dessous, valeur B)
Tenue en pression	[bar]	16
PMSA (pour des applications selon NEC)	[bar]	16
Température du fluide	[°F]	32...140

Données électriques

Technologie		DC PNP
Tension d'alimentation	[V]	19...30 DC [1])
Consommation	[mA]	< 100
Classe de protection		III
Protection contre l'inversion de polarité		oui

Sorties

Sortie		OUT1: normalement ouvert / fermé programmable ou impulsion OUT2: normalement ouvert / fermé programmable ou analogique (4...20 mA réglable)
Courant de sortie	[mA]	2 x 250
Chute de tension	[V]	< 2
Protection courts-circuits		pulsé

SD2001

SDN21DGXFPKG/US-100

Capteurs de débit

Protection surcharges		oui	
Sortie analogique		4...20 mA	
Charge maxi	[Ω]	< 500	
Sortie impulsionnelle		compteur totalisateur de la consommation	
Etendue de mesure / plage de réglage			
Contrôle de débit			
Etendue de mesure		1,4...412,0 scfm	90...24720 scfh
Plage d'affichage		0.0...494,4 scfm	0...29670 scfh
Point de consigne haut, SP		3,7...412,0 scfm	220...24720 scfh
Point de consigne bas, rP		1,6...409,9 scfm	100...24600 scfh
Sortie analogique/valeur min, ASP		0,0...309,0 scfm	0...18540 scfh
Sortie analogique/valeur max, AEP		103,0...412,0 scfm	6180...24720 scfh
en pas de		0,1 scfm	10 scfh
Surveillance du débit			
Valeur de l'impulsion		0,400...4 000 000 scf	
en pas de		0,020...1000 scf	
Durée d'impulsions	[s]	0,049... 2	
Contrôle de la température			
Etendue de mesure	[°F]	32...140	
Plage d'affichage	[°F]	32...140	
Exactitude / dérives			
Contrôle de débit			
Précision(entre l'etendue de mesure)		A): ± (3% MW + 0,3% MEW) / B): ± (6% MW + 0,6% MEW) ***)	
Répétabilité du seuil	[% de la valeur mesurée]	± 1,5	
Contrôle de la température			
Précision	[K]	± 2 **)	
Temps de réponse			
Retard à la disponibilité	[s]	0,5	
Contrôle de débit			
Temps de réponse	[s]	< 0,1 (dAP = 0)	
Amortissement, dAP	[s]	0 - 0,2 - 0,4 - 0,6 - 0,8 - 1	
Logiciel / programmation			
Options à programmer		hystérésis/fonction fenêtre; N.F/N.O; sortie courant / impulsion sortie; calibrage des valeurs affichées; affichage peut être orienté à 180° / desactivé; unité d'affichage	
Conditions d'utilisation			
Température ambiante	[°F]	32...140	
Température de stockage	[°F]	-4...185	
Humidité relative	[%]	90	
Protection		IP 65	
Tests / Homologations			
Druckgeräterichtlinie		article 3, point 3 - règles de l'art	
CEM		DIN EN 61000-6-2 DIN EN 61000-6-3	
Tenue aux vibrations		DIN EN 68000-2-6:	5 g (55...2000 Hz)

MTTF	[Années]	227

Données mécaniques

Raccord process		2" NPT (DN50)
Matières en contact avec le fluide		inox (1.4301 / 304); FKM; céramique vitrifié; PEEK GF30; polyester; aluminium
Matières boîtier		PBT-GF 20; NBR; PC (polycarbonate); inox (1.4301 / 304); PTFE; laiton revêtu; FKM; aluminium surface protégée par pulvérisation
Poids	[kg]	4,428

Afficheurs / éléments de service

Indication	Unité d'affichage	4 x LED vert (scfm, scfh, scf, °F)
	Indication de fonction	1 x LED jaune
	Indication de commutation	2 x LED jaune
	Valeurs mesurées	Visualisation alphanumérique à 4 digits
	Programmation	Visualisation alphanumérique à 4 digits

Raccordement électrique

Raccordement	Connecteur M12

Branchement

Programmation des sorties
----------OUT1----------
- Sortie TOR
Hno = hystérésis / normalement ouvert
Hnc = hystérésis / normalement fermé
Fno = fonction fenêtre / normalement ouvert
Fnc = fonction fenêtre / normalement fermé
- ImP = sortie d'impulsion pour compteur volumétrique / sortie TOR pour pour compteur à présélection
----------OUT2----------
- Sortie TOR
Hno = hystérésis / normalement ouvert
Hnc = hystérésis / normalement fermé
Fno = fonction fenêtre / normalement ouvert
Fnc = fonction fenêtre / normalement fermé
- Sortie analogique
I = sortie de courant (4...20 mA)

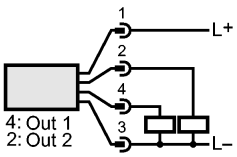

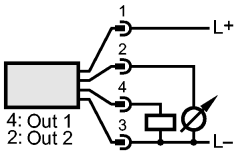

Remarques

Remarques	[1]) selon EN50178, TBTS, TPTB **) en cas d'écoulement dans les limites de mesure du débit permises ***) dans les conditions selon DIN ISO 2533 et en cas de montage dans des tuyaux DN50 scf = standard cubic feet (Normo pied cube) scfh = standard cubic feet per hour (Normo pied cube par heure) scfm = standard cubic feet per minute (Normo pied cube par minute) MW = valeur mesurée MEW = valeur finale de l'étendue de mesure Etendue de mesure, gamme d'affichage et plage de réglage se réfèrent au le débit d'un volume normalisé selon DIN ISO 2533. Pour des informations sur l'installation et l'utilisation voir la notice d'instructions.
Quantité [piece]	1

ifm electronic

CE

Operating instructions
Compressed air meter

efector300

SD2001

UK

704839 / 00 07 / 2010

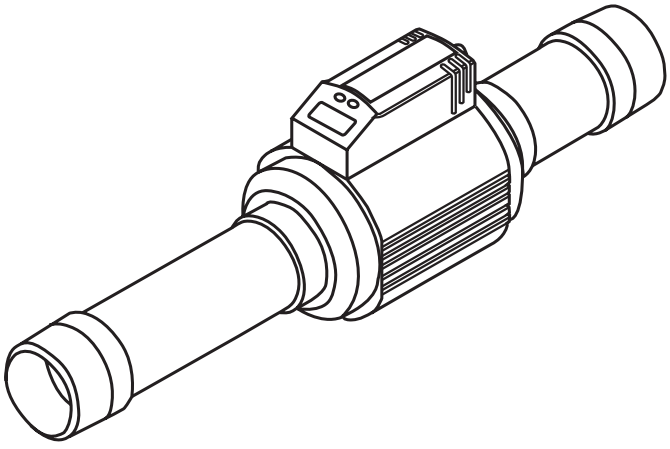

Contents

1 Preliminary note 4
1.1 Symbols used 4

2 Safety instructions 4

3 Functions and features 5

4 Function 5
4.1 Processing of the measured signals 5
4.2 Volumetric flow monitoring 5
4.3 Consumed quantity monitoring (totalizer function) 5
4.3.1 Consumed quantity monitoring with pulse output 6
4.3.2 Consumed quantity monitoring with preset meter 6
4.4 Monitoring of temperatures 6
4.5 Volumetric flow monitoring / switching function 6
4.6 Volumetric flow monitoring / analogue function 7

5 Installation 8
5.1 Installation location 8
5.2 Installation conditions 8
5.3 Mounting position 9
5.4 Installation in pipes 10

6 Electrical connection 10

7 Operating and display elements 11

8 Menu 12
8.1 Menu structure 12
8.2 Explanation of the menu 13

9 Parameter setting 14
9.1 General parameter setting 14
9.2 Settings for volumetric flow monitoring 15
9.2.1 Settings for limit value monitoring with OUT1 15
9.2.2 Settings for limit value monitoring with OUT2 16
9.2.3 Scaling of the analogue value for volumetric flow 16
9.3 Settings for monitoring of consumed quantities 16
9.3.1 Settings for quantity monitoring by pulse output 16
9.3.2 Settings for quantity monitoring using the preset meter 16

9.3.3 Settings for meter reset controlled by the program 16
9.3.4 Switch off the meter reset 17
9.4 User settings (optional) 17
9.4.1 Determine the standard unit of measurement for volumetric flow 17
9.4.2 Configuration of the standard display 17
9.4.3 Setting the damping of the measured values 17
9.4.4 Setting the error behaviour of OUT1 / OUT2 17
9.5 Service-Funktionen 18
9.5.1 Reading the min./max. values for volumetric flow 18
9.5.2 Reset all parameters to the factory setting 18
9.6 Setting of the preset meter / pulse value (ImPS) 19
10 Operation 21
10.1 Read the set parameters 21
10.2 Changing the display unit in the Run mode 21
10.3 Error indication 22
10.4 General operating conditions 22
11 Scale drawing 23
12 Technical data 24
12.1 Setting ranges 25
13 Factory setting 25

1 Preliminary note

1.1 Symbols used

▶ Instruction

> Reaction, result

[…] Designation of buttons, switches or indications

→ Cross-reference

Important note
Non-compliance can result in malfunctions or interference.

2 Safety instructions

- Please read this document prior to installing the unit. Ensure that the product is suitable for your application without any restrictions.
- Work on compressed air equipment as well as mounting, setting for operation and set-up of the unit must be carried out by suitably qualified personnel. When doing so, state of the art, safety and accident prevention regulations must be adhered to.
- Ensure that the installation is at a standstill and no pressure is applied before mounting components into or removing them from compressed air equipment.
- Improper or non-intended use may lead to malfunctions of the unit or to unwanted effects in your application. That is why installation, electrical connection, set-up, operation and maintenance of the unit must be carried out by qualified personnel authorised by the plant operator.
- In all applications test the compatibility of the product materials (→ 12 Technical data) with the media to be measured.

For the scope of validity cULus: The device shall be supplied from an isolating transformer having a secondary Listed fuse rated as noted in the following table.

Overcurrent protection		
Control-circuit wire size		Maximum protective device rating Ampere
AWG	(mm^2)	
26	(0.13)	1
24	(0.20)	2
22	(0.32)	3
20	(0.52)	5
18	(0.82)	7
16	(1.3)	10

3 Functions and features

The unit monitors the standard volume flow of operating compressed air.
It detects the 3 process categories volumetric flow, consumed quantity, medium temperature.

Applications: compressed air equipment.
All data refer to standard volume flow according to DIN ISO 2533, i.e. volume flow at 1013 hPa, 15°C and 0% relative air humidity.

The general operating conditions of compressed air equipment apply.

4 Function

4.1 Processing of the measured signals

- The unit displays the current process values.
- It generates 2 output signals according to the parameter setting.

  OUT1: 3 selection options ..... parameter setting
  switching signal for volumetric flow limit values ..... (→ 9.2.1)
  or pulse sequence for totalising meter ..... (→ 9.3.1)
  or switching signal for preset counter ..... (→ 9.3.2)

  OUT2: 2 selection options
  switching signal for volumetric flow limit value ..... (→ 9.2.2)
  or analogue signal for volumetric flow ..... (→ 9.2.3)

4.2 Volumetric flow monitoring

The flow rate is monitored by a calorimetric measuring system, the measured signals by the electronics.

- 2 switching signals for volumetric flow limit values can be provided (output 1 and output 2). For the switching functions → 4.5.
- An analogue signal proportional to the volumetric flow (4...20 mA) can be provided on output 2. For the analogue functions → 4.6.

4.3 Consumed quantity monitoring (totalizer function)

The unit has an internal quantity meter which continuously totals the volumetric flow. The sum corresponds to the current consumed quantity since the last reset.

- The current meter count can be indicated.
- In addition the value before the last reset is stored. This value can also be indicated.

The meter saves the totalled consumed quantity every 10 minutes. After a power failure this value is available as the current meter count. If a time-controlled reset is set, the elapsed time of the set reset interval is also stored. So the possible data loss can be maximum 10 minutes.

The meter can be reset as follows:

- Manual reset (→ 9.3.3).
- Time-controlled automatic reset (→ 9.3.3).

4.3.1 Consumed quantity monitoring with pulse output

Output 1 provides a counting pulse if the value set in [ImPS] is reached (→ 9.3.1).

4.3.2 Consumed quantity monitoring with preset meter

2 types of monitoring are possible:

- Time-dependent quantity monitoring
  - Settings: [ImPS] = quantity x, [ImPR] = [no], [rTo] = time t.
  - If the quantity x is reached during the time t, output 1 switches and remains switched until the meter is reset.
  - If the quantity x has not been reached after the time t, the meter is automatically reset and counting starts again; output 1 does not switch.
- Quantity monitoring not time-dependent
  - Settings: [ImPS] = quantity x, [ImPR] = [no], [rTo] = [OFF].
  - If the quantity x is reached, output 1 switches and remains switched until the meter is reset.

4.4 Monitoring of temperatures

- The unit detects the current system temperature and shows it on the display (→ chapter 10.2 Changing the display unit in the Run mode).

4.5 Volumetric flow monitoring / switching function

OUTx changes its switching state if it is above or below the set switching limits (SPx, rPx). The following switching functions can be selected:

- Hysteresis function / normally open (fig. 1): [OUx] = [Hno].
- Hysteresis function / normally closed (fig. 1): [OUx] = [Hnc].
  First the set point (SPx) is set, then the reset point (rPx) at the requested distance.
- Window function / normally open (fig. 2): [OUx] = [Fno].
- Window function / normally closed (fig. 2): [OUx] = [Fnc].
  The width of the window can be set by means of the distance between SPx and rPx. SPx = maximum value, rPx = minimum value.

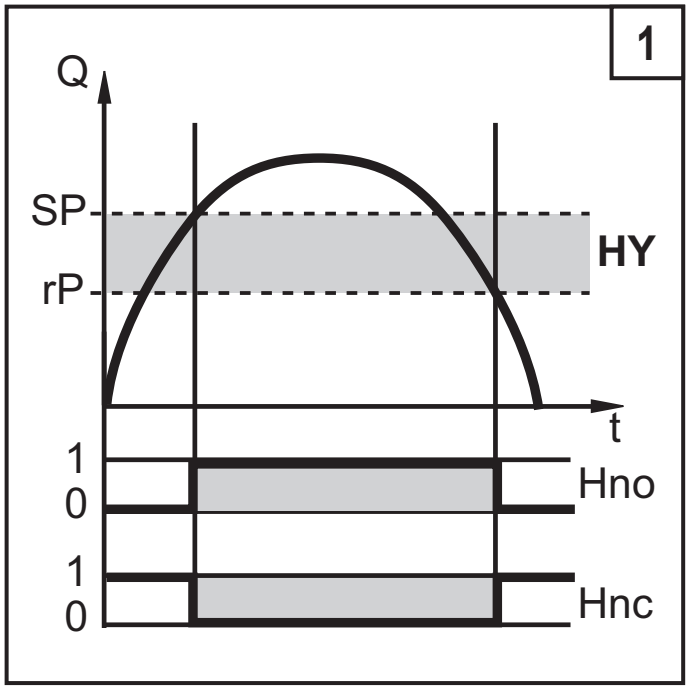

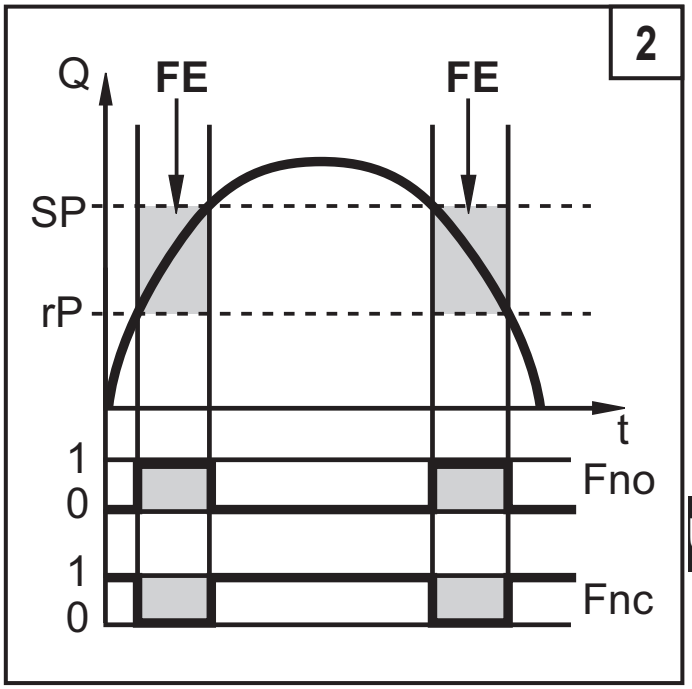

HY = hysteresis; FE = window

When set to the window function the set and reset points have a fixed hysteresis of 0.25 % of the final value of the measuring range. This keeps the switching state of the output stable if the volumetric flow varies slightly.

4.6 Volumetric flow monitoring / analogue function

- The analogue start point [ASP] determines at which measured value the output signal is 4 mA.
- The analogue end point [AEP] determines at which measured value the output signal is 20 mA.

Minimum distance between [ASP] and [AEP] = 25 % of the final value of the measuring range.

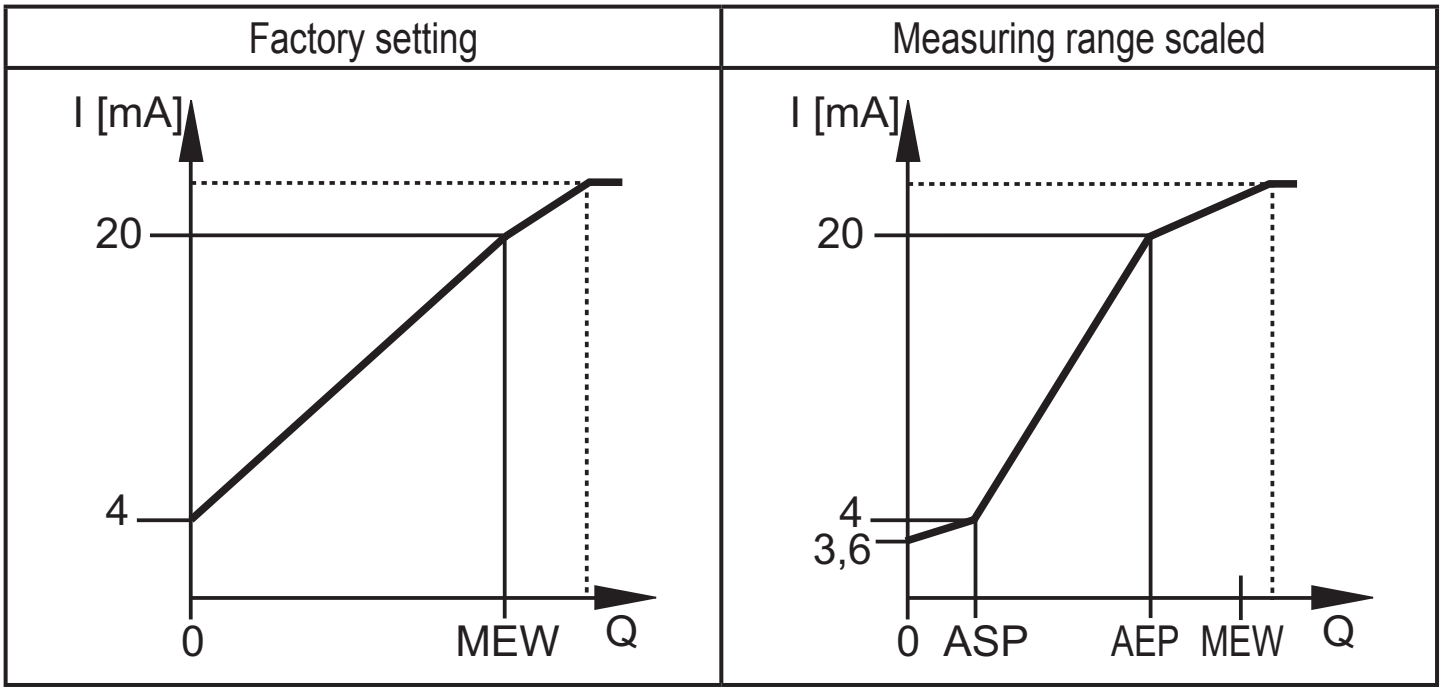

MEW = final value of the measuring range
In the set measuring range the output signal is between 4 and 20 mA.
It is also indicated:
• Volumetric flow above the measuring range: output signal > 20 mA.
• Flow rate below the measuring range: output signal between 3.6 and 4 mA.

5 Installation

The rules and regulations for the installation and operation of compressed air equipment must be observed.

5.1 Installation location

- Behind the cold dryer / near the load.
- If compressed air is fed into the main pipe through parallel pipes, the unit should be mounted in the main pipe.
- Installation after the maintenance unit is also possible. If oil is used for the loads, the unit must be mounted before the oiler.

5.2 Installation conditions

To achieve the specified measurement accuracy, the following mounting conditions must be adhered to: defined inflow / outflow pipe lengths, defined flow cross-sectional area, fixed installation depth and correct positioning of the measuring elements.
The unit is delivered mounted on a pipe section meeting these conditions.

In case of turbulances at the inflow side additional baffled pipes (B) are recommended:

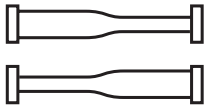	changes to the pipe diameter	B = 15 x pipe diameter
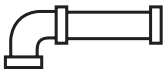	90° elbow	B = 15 x pipe diameter
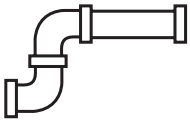	two 90° elbows, one plane	B = 20 x pipe diameter
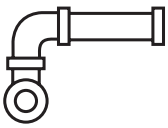	two 90° elbows, two planes	B = 25 x pipe diameter
	valve, slide	B = 45 x pipe diameter

5.3 Mounting position

- Permitted mounting positions: pipe length vertical, any position (fig. 1, 2), pipe length horizontal, unit vertical (fig. 3, 4), unit on side, pipe length left (fig. 5).
- Avoid the mounting position shown in fig. 6 (unit on side, pipe length right). If the flow rate is low, the specified measurement accuracy cannot be adhered to.

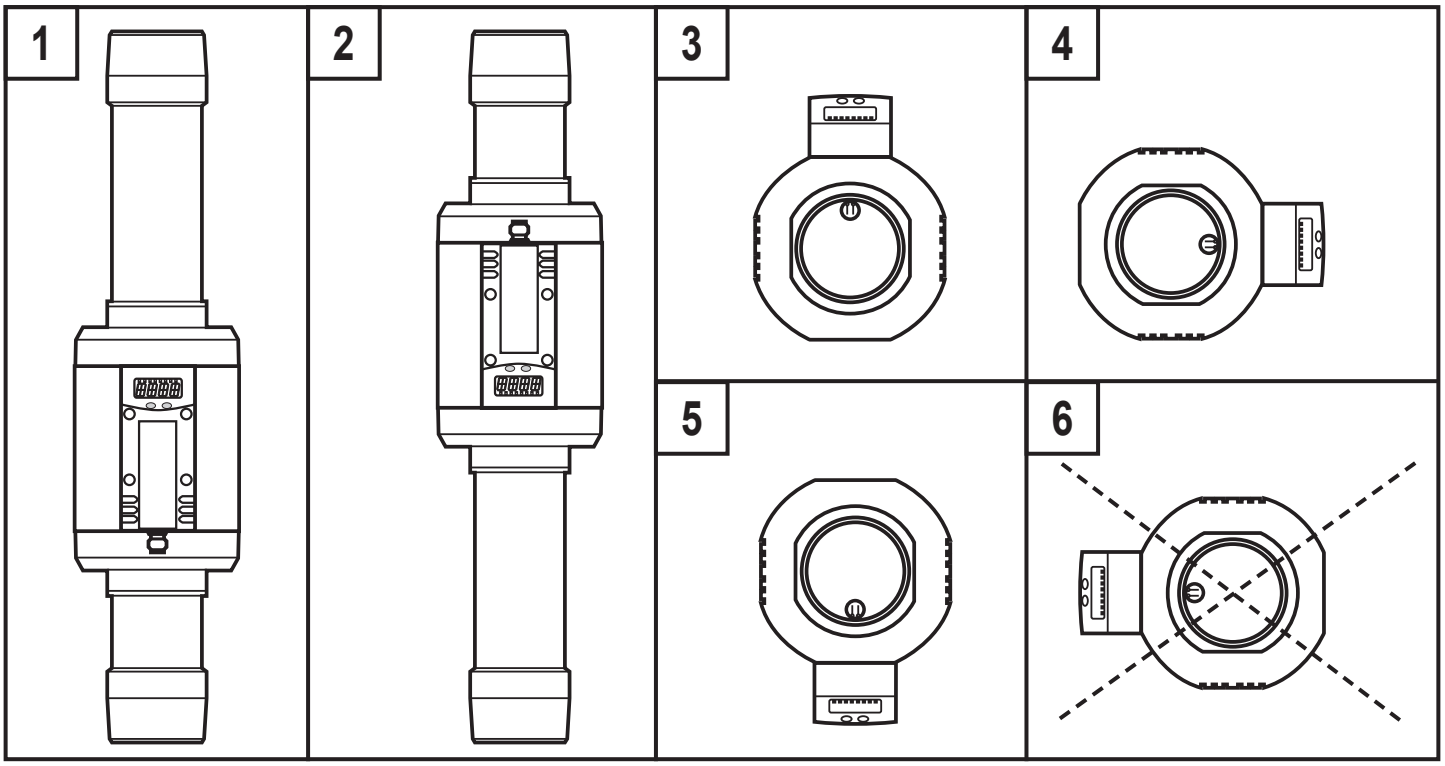

5.4 Installation in pipes

Integrate the pipe length so that the direction of flow (1) and the marking arrow (2) show in the same direction.

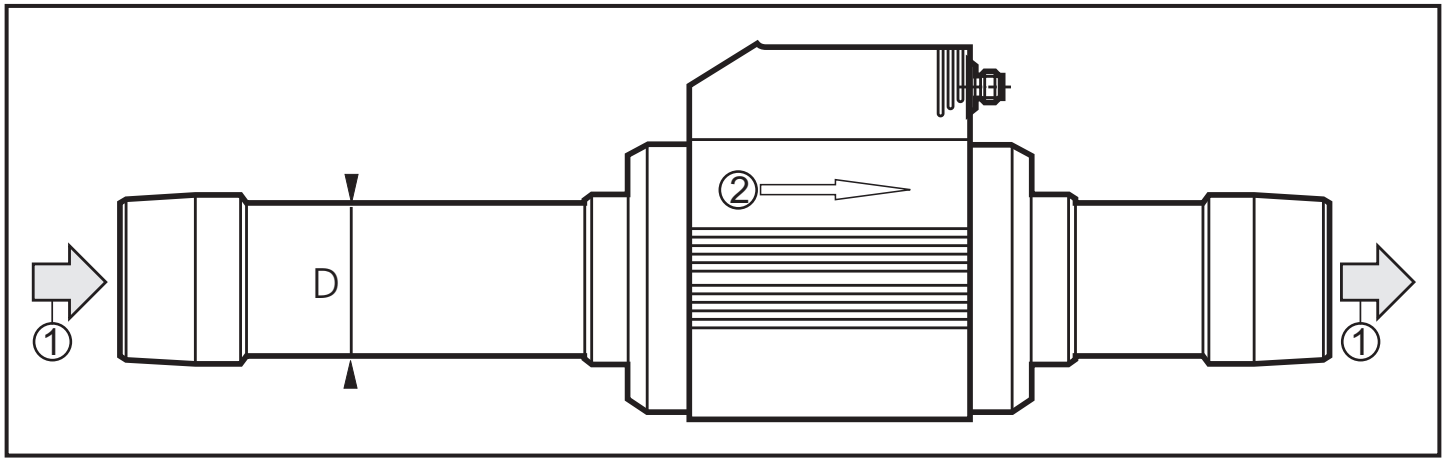

6 Electrical connection

The unit must be connected by a qualified electrician.
The national and international regulations for the installation of electrical equipment must be adhered to.
Voltage supply to EN50178, SELV, PELV.

- ▶ Disconnect power.
- ▶ Connect the unit as follows:

2 switching outputs	1 switching output / 1 analog output
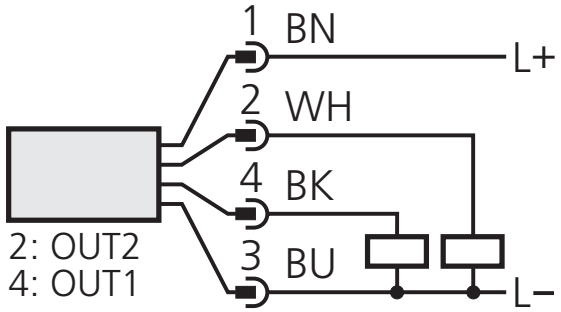	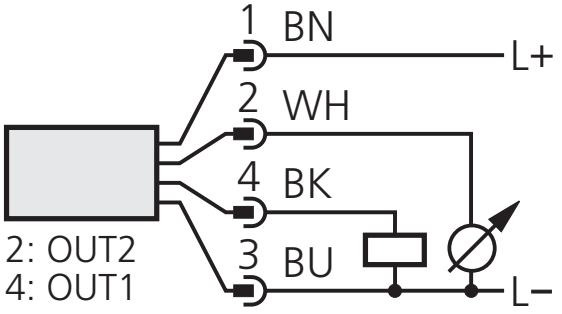

OUT1: switching signal or pulse sequence pnp
OUT2: switching signal pnp or analogue signal (I)
Core colours of ifm sockets:
1 = BN (brown), 2 = WH (white), 3 = BU (blue), 4 = BK (black).

7 Operating and display elements

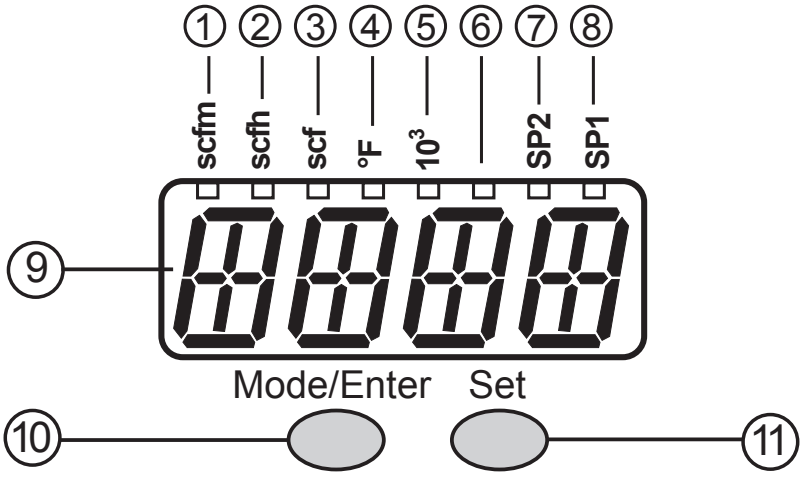

UK

1 to 8: Indicator LEDs
- LED 1 = current volumetric flow in standard cubic feet/minute (scfm). - LED 2 = current volumetric flow in standard cubic feet/hour (scfh). - LED 3 = current consumed quantity since the last reset in standard cubic feet (scf). - LED 3 flashing = consumed quantity before the last reset in standard cubic feet (scf). - LEDs 3 and 5 = current consumed quantity since the last reset in 10^3 standard cubic feet. - LEDs 3 and 5 flashing = consumed quantity before the last reset in 10^3 standard cubic feet. - LED 4 = current medium temperature in °F. - LED 6 = not used. - LED 7, LED 8 = switching state of the corresponding output.
9: Alphanumeric display, 4 digits
- Indication of the current volumetric flow (if [SELd] = [FLOW] is set). - indication of the meter count (if [SELd] = [TOTL] is set). - indication of the current medium temperature (→ 10.2). - indication of the parameters and parameter values.
10: Mode/Enter pushbutton
- Selection of the parameters and acknowledgement of the parameter values.
11: Set pushbutton
- Setting of the parameter values (scrolling by holding pressed, incremental by pressing briefly). - Change of the display unit in the normal operating mode (Run mode).

8 Menu

8.1 Menu structure

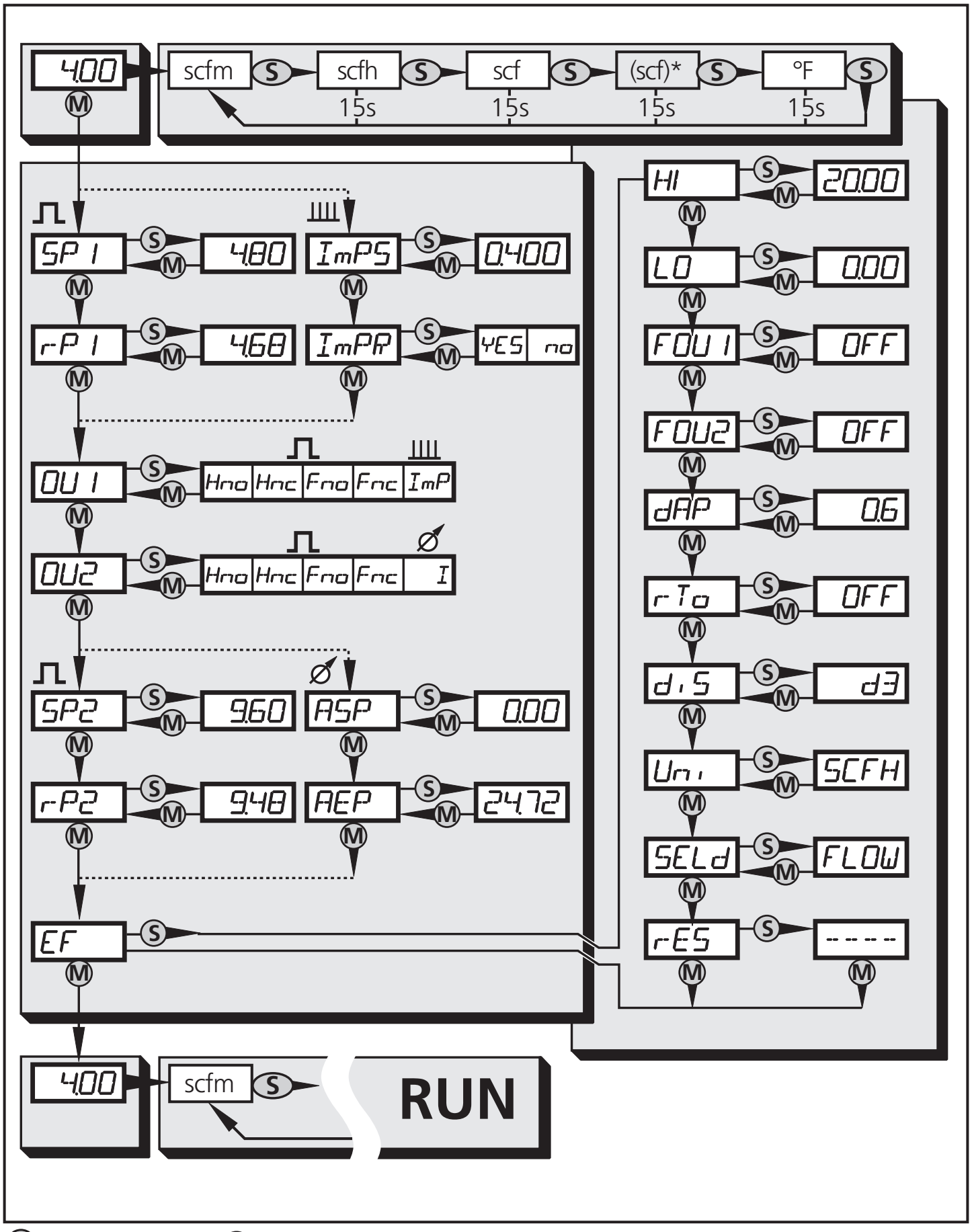

Ⓜ = [Mode/Enter] / Ⓢ = [Set]

scf = current meter count in standard cubic feet

(scf)* = stored meter count in standard cubic feet

8.2 Explanation of the menu

SP1/rP1	Maximum / minimum value for volumetric flow, at which OUT1 changes its switching status.
ImPS	Pulse value.
ImPR	Pulse repetition active (= pulse output) or not active (= function preset meter).
OU1	Output function for OUT1 (volumetric flow or consumed quantity): - Switching signal for limit values: hysteresis function or window function, normally open or normally closed. - Pulse or switching signal for quantity meter.
OU2	Output function for OUT2 (volumetric flow): - Switching signal for limit values: hysteresis function or window function, normally open or normally closed. - Analogue signal: 4-20 mA.
SP2/rP2	Maximum / minimum value for volumetric flow, at which OUT2 changes its switching status.
ASP	Analogue start value for volumetric flow.
AEP	Analogue end value for volumetric flow.
EF	Extended functions / opening of menu level 2.
HI / LO	Maximum / minimum value memory for volumetric flow.
FOU1	Behaviour of output 1 in case of an internal fault.
FOU2	Behaviour of output 2 in case of an internal fault.
dAP	Measured value damping / damping constant in seconds.
rTo	Meter reset: manual reset / time-controlled reset.
diS	Update rate and orientation of the display.
Uni	Standard unit of measurement for volumetric flow: standard cubic feet/minute or standard cubic feet/hour.
SELd	Standard process category of the display: volumetric flow value / meter count.
rES	Restore factory setting.

9 Parameter setting

During parameter setting the unit remains in the operating mode. It continues its monitoring function with the existing parameters until the parameter setting has been completed.

9.1 General parameter setting

3 steps must be taken for each parameter set:

<table>
<tr><td>1</td><td>Parameter selection
▶ Press [Mode/Enter] until the requested parameter is displayed.</td><td> 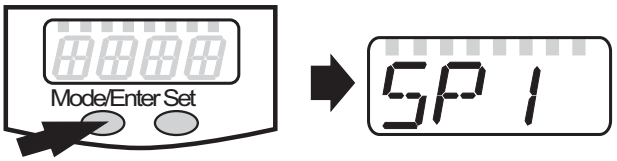
</td></tr>
<tr><td rowspan="2">2</td><td>Setting of the parameter value
▶ Press [Set] and keep it pressed.
> Current setting value of the parameter flashes for 5 s.
> After 5 s: The setting value is changed: incremental by pressing briefly or scrolling by holding pressed.</td><td> 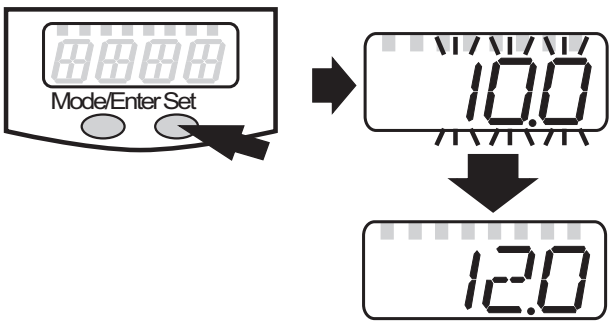
</td></tr>
<tr><td colspan="2">Numerical values are incremented continuously. If the value is to be reduced: let the display move to the maximum setting value. Then the cycle starts again at the minimum setting value.</td></tr>
<tr><td>3</td><td>Acknowledgement of the parameter value
▶ Press [Mode/Enter] briefly.
> The parameter is displayed again. The new setting value is stored.</td><td> 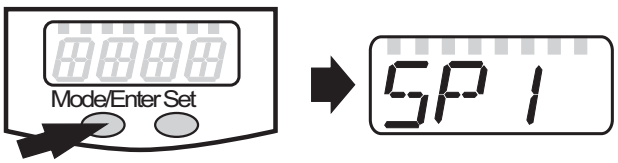
</td></tr>
<tr><td colspan="3">Setting of other parameters
▶ Start again with step 1.</td></tr>
<tr><td colspan="3">Finishing the parameter setting
▶ Press [Mode/Enter] several times until the current measured value is displayed or wait for 15 s.
> The unit returns to the operating mode.</td></tr>
</table>

- Change from menu level 1 to menu level 2

▶ Press [Mode/Enter] until [EF] is displayed.	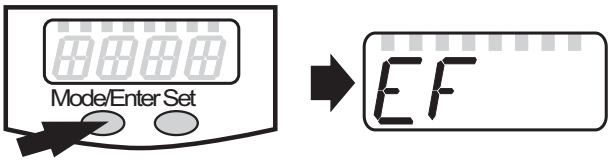
▶ Press [Set] briefly. > The first parameter of the sub-menu is displayed (here: [HI]).	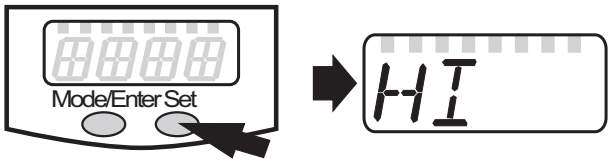

- Locking / unlocking

  The unit can be locked electronically to prevent unintentional wrong settings.

▶ Make sure that the unit is in the normal operating mode. ▶ Press [Mode/Enter] + [Set] for 10 s. > [Loc] is displayed.	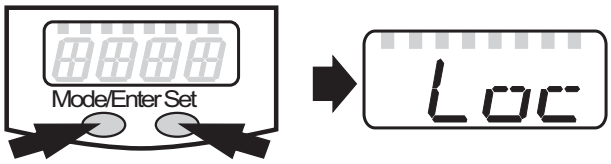
During operation: [Loc] is briefly displayed if you try to change parameter values.	
▶ Press [Mode/Enter] + [Set] for 10 s. > [uLoc] is displayed.	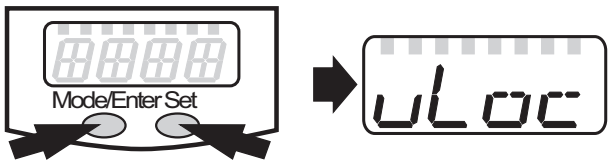

When delivered: unlocked.

- Time out:

If during parameter setting no pushbutton is pressed for 15 s, the unit exits the parameter setting mode. The parameter value is not changed.

9.2 Settings for volumetric flow monitoring

9.2.1 Settings for limit value monitoring with OUT1

▶ Select [OU1] and set the switching function: [Hno] = hysteresis function/normally open, [Hnc] = hysteresis function/normally closed, [Fno] = window function/normally open, [Fnc] = window function/normally closed. ▶ Select [SP1] and set the value at which the output switches. ▶ Select [rP1] and set the value at which the output switches back.	

9.2.2 Settings for limit value monitoring with OUT2

- ▶ Select [OU2] and set the switching function:
  [Hno] = hysteresis function/normally open,
  [Hnc] = hysteresis function/normally closed,
  [Fno] = window function/normally open,
  [Fnc] = window function/normally closed.
- ▶ Select [SP2] and set the value at which the output switches.
- ▶ Select [rP2] and set the value at which the output switches back.

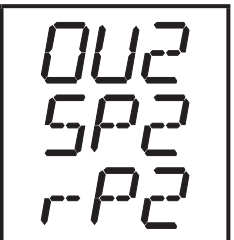

9.2.3 Scaling of the analogue value for volumetric flow

- ▶ Select [OU2] and set the function:
  [I] = current signal proportional to volumetric flow (4…20 mA);
- ▶ Select [ASP] and set the value at which the minimum output value is provided.
- ▶ Select [AEP] and set the value at which the maximum output value is provided.

9.3 Settings for monitoring of consumed quantities

9.3.1 Settings for quantity monitoring by pulse output

- ▶ [Select [OU1] and set [ImP].
- ▶ Select [ImPS] and set the volumetric flow quantity at which 1 pulse is provided (→ 9.6).
- ▶ Select [ImPR] and set [YES]
- > Pulse repetition is active. Output 1 provides a counting pulse when the value set in [ImPS] is reached.

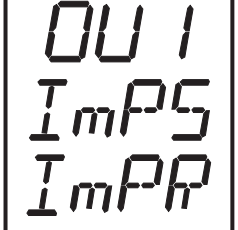

9.3.2 Settings for quantity monitoring using the preset meter

- ▶ Select [OU1] and set [ImP].
- ▶ Select [ImPS] and set the volumetric flow quantity at which output 1 switches (→ 9.6).
- ▶ Select [ImPR] and set [no]
- > Pulse repetition is not active. The output switches ON if the value set in [ImPS] is reached. It remains switched until the meter is reset.

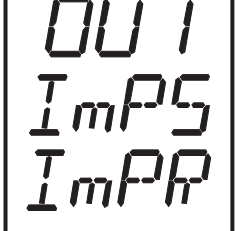

9.3.3 Settings for meter reset controlled by the program

- ▶ Select [rTo] and continue with a) or b).

a) Reset the meter manually

- ▶ Press [Set] until [rES.T] is displayed, then press [Mode/Enter] briefly.

b) Enter the value for time-controlled reset

- ▶ Press [Set] until the requested value is displayed (intervals from 1 hour to 8 weeks), then press [Mode/Enter] briefly.

9.3.4 Switch off the meter reset

▶ Select [rTo] and set [OFF]. The meter is only reset after overflow (= factory setting).	

9.4 User settings (optional)

9.4.1 Determine the standard unit of measurement for volumetric flow

▶ Select [Uni] and set the unit of measurement: [SCFm] = flow rate in standard cubic feet / minute. [SCFH] = flow rate in standard cubic feet / hour. The setting only has an effect on the volumetric flow value. The counter values (consumed quantity) are automatically displayed in the unit of measurement providing the highest accuracy.	

UK

9.4.2 Configuration of the standard display

▶ Select [SELd] and determine the standard process category. [FLOW] = display shows the current volumetric flow value in the standard unit of measurement. [TOTL] = display indicates the current meter count in scf or 1000 scf. ▶ Select [diS] and determine the update rate and orientation of the display: [d1] = update of the measured values every 50 ms. [d2] = update of the measured values every 200 ms. [d3] = update of the measured values every 600 ms. [rd1], [rd2], [rd3] = display as for d1, d2, d3; rotated by 180°. [OFF] = the display is switched off in the operating mode.	

9.4.3 Setting the damping of the measured values

Select [dAP] and the damping constant in seconds (t value 63 %).	

9.4.4 Setting the error behaviour of OUT1 / OUT2

▶ [Select [FOU1] and determine the value: [On] = output 1 switches ON in case of an error. [OFF] = output 1 switches OFF in case of an error. [OU] = output 1 switches irrespective of the error as defined with the parameters. ▶ Select [FOU2] and determine the value: [On] = output 2 switches ON in case of an error, the analogue signal goes to the upper end stop value. [OFF] = output 2 switches OFF in case of an error, the analogue signal goes to the lower end stop value. [OU] = output 2 switches irrespective of the error as defined with the parameters. The analogue signal corresponds to the measured value.	

9.5 Service-Funktionen

9.5.1 Reading the min./max. values for volumetric flow

▶ Select [HI] or [LO] and press [Set] briefly. [HI] = maximum value, [LO] = minimum value. Delete memory: ▶ Select [HI] or [LO]. ▶ Press [Set] and keep it pressed until [----] is displayed. ▶ Press [Mode/Enter] briefly. It makes sense to delete the memories as soon as the unit works under normal operating conditions for the first time.	

9.5.2 Reset all parameters to the factory setting

▶ Select [rES], then press [Set] and keep it pressed until [----] is displayed. ▶ Press [Mode/Enter] briefly. The factory setting is listed at the end of the instructions (→ 13 Factory setting). It makes sense to write your own settings in this table before executing the function.	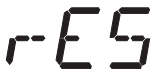

9.6 Setting of the preset meter / pulse value (ImPS)

7 setting ranges are available:

	LED	indication	in steps of	value
1	3	0.400 ... 9.980	0.020 scf	0.400...9.980 scf
2	3	10.00 ... 99.98	0.02 scf	10.00...99.98 scf
3	3	100.0 ... 999.9	0.1 scf	100.0...999.9 scf
4	3	1000 ... 9999	1 scf	1000...9999 scf
5	3 + 5	10.00 ... 99.99	10 scf	10 000...99 990 scf
6	3 + 5	100.0 ... 999.9	100 scf	100 000...999 900 scf
7	3 + 5	1000 ... 4000	1000 scf	1 000 000 scf ... 4 000 000 scf

UK

Setting operation:

- ▶ Ensure that [OU1] is set to [ImP].
- ▶ Select [ImPS], press [Set] and keep it pressed.
- > The current numerical value flashes for 5 s, then one of the 4 digits becomes active (digit flashes, can be changed).
- ▶ Set the requested value as indicated in the following table.
  First select the requested setting range. Then set the figure from the left digit to the right digit.
- ▶ Press [Mode/Enter] briefly when all 4 digits are set.

As soon as the first digit flashes there are 3 options:

▶ Press [Set] once	The flashing digit is increased. 9 is followed by 0 - 1 - 2, etc. 8.123 [Set] pressed 1 x 9.123 [Set] pressed 1 x 0.123 [Set] pressed 1 x 1.123

<table>
<tr><td rowspan="2">▶ Press [Set] and keep it pressed.</td><td>The flashing digit is increased, 9 is followed by 0 and the first new digit (left) becomes active.
 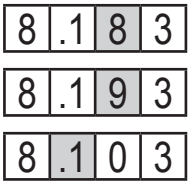 </td></tr>
<tr><td>If digit 1 is increased this way, the display changes to the next higher setting range (9 is followed by 10).
 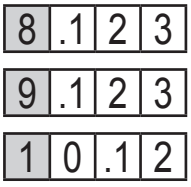 </td></tr>
<tr><td rowspan="2">▶ Press no pushbutton for 3 s.</td><td>The digit following on the right flashes (= becomes active).
If the fourth digit flashes unchanged for 3 s, digit 1 becomes active again (if the value of digit 1 is > 0).
 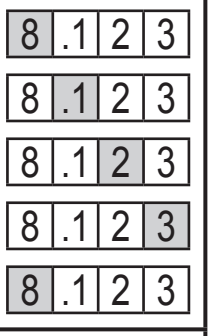 </td></tr>
<tr><td>If digit 1 has the value “0”, the display changes to the next lower setting range.
 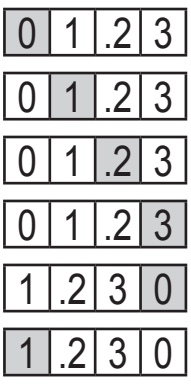 </td></tr>
</table>

Highlighted grey (1) = flashing digit

Note: If [Set] is pressed continuously, the display moves through all setting ranges; after the end value it jumps back to the start value. Release [Set] briefly and start the setting again.

10 Operation

Correct operation and compliance with the measurement accuracy can only be ensured if the environmental conditions specified in the “Technical data” (→ chapter 12) are adhered to. Ensure that the maximum pressure range, measuring range and permitted operating temperature are not exceeded.

After power on and expiry of the power-on delay time (approx. 0.5 s) the unit is in the Run mode (= normal operating mode). It carries out its measurement and evaluation functions and generates output signals according to the set parameters.

- Operation indication → chapter 7 Controls and indicating elements.
- During the power-on delay time the outputs are switched as programmed: ON for NO function (Hno / Fno) and OFF for NC function (Hnc / Fnc).
- If output 2 is configured as analogue output, the output signal is at the maximum value during the power-on delay time.

10.1 Read the set parameters

▶ Press [Mode/Enter] until the requested parameter is displayed.
▶ Press [Set] briefly.
> The unit displays the corresponding parameter value for about 15 s. After another 15 s the parameter is displayed again, then the unit returns to the Run mode.

10.2 Changing the display unit in the Run mode

▶ Press [Set] briefly in the Run mode. Press the pushbutton to move to the next display unit.
> The unit displays the current measured value for approx. 15 s, the corresponding LED lights.

10.3 Error indication

[SC1]	Short circuit in OUT1.*
[SC2]	Short circuit in OUT2.*
[SC]	Short circuit in both outputs.*
[OL]	Measured value > 120% of the final value of the measuring range.
[UL]	Measured value < lowest value of the measuring range.
[Err]	Fault in the measuring probe.

*The output concerned is switched off as long as the short circuit continues.
These faults are indicated even if the display is deactivated.

10.4 General operating conditions

The unit is maintenance-free for media which will not adhere to the measuring probes.

- From time to time check the measuring probes visually for build-up.
- If necessary, clean them at regular intervals. To do so, use a suitable cleaning liquid (e.g. alcoholic solution).
- Avoid mechanical damage to the measuring probes.

11 Scale drawing

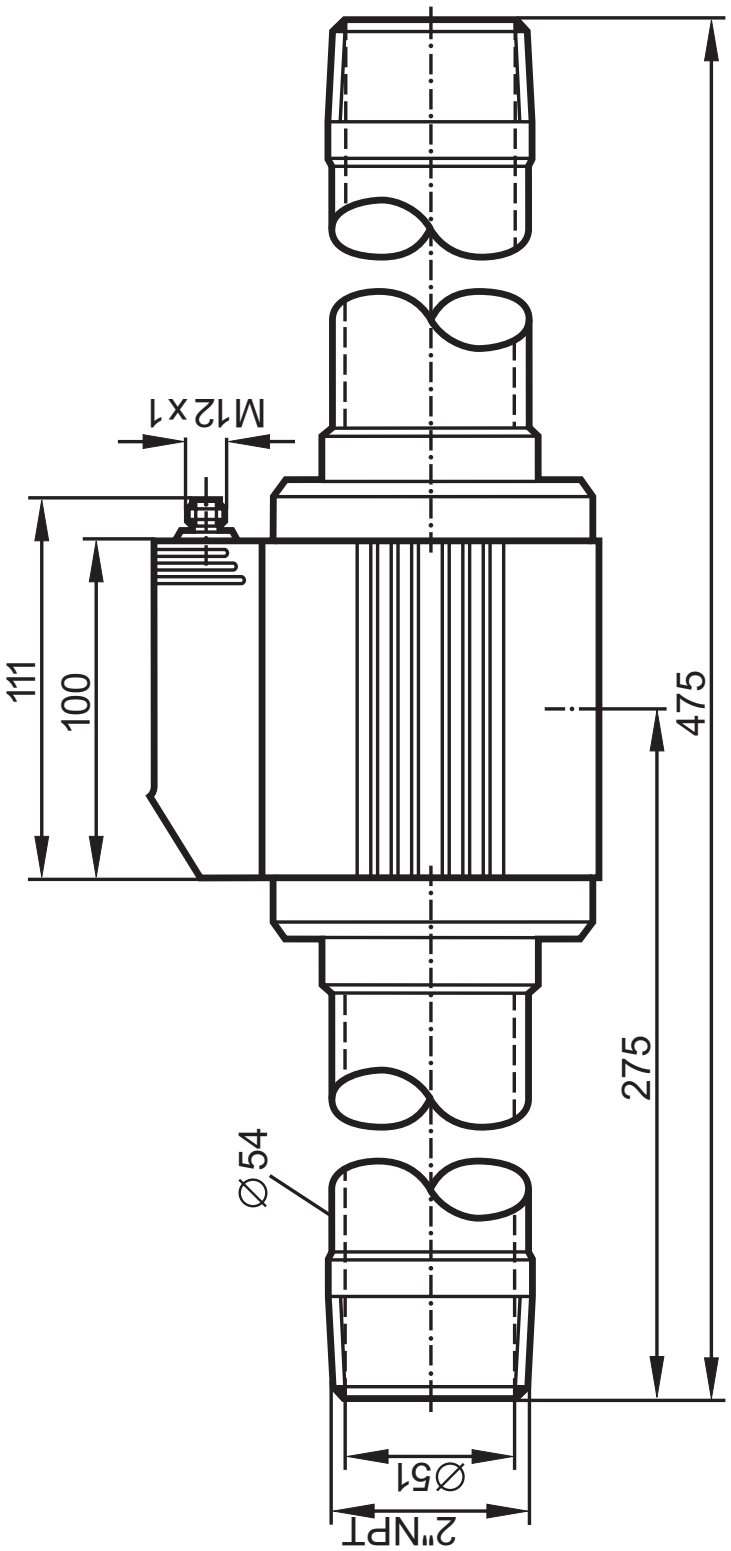

Dimensions are in millimeters
1: Programming pushbuttons
2: Alphanumeric display
3: LED

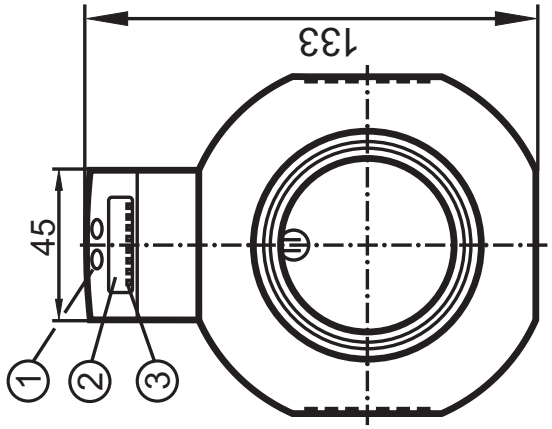

UK

12 Technical data

Operating voltage [V]	19...30 DC[1]
Current rating [mA]	2 x 250
Protection: short circuit, reverse polarity, overload	
Voltage drop [V]	< 2
Current consumption typ. [mA]	100
Analogue output	4...20 mA; measuring range scaleable
Max. load [Ω]	500
Pulse value	0.400...4 000 000 scf
Pulse length [s]	min. 0.049 / max. 2
Power-on delay time [s]	0.5
Flow monitoring	
Measuring range [scfh / scfm]	90...24720 / 1.4...412.0
Display range [scfh / scfm]	0...29670 / 0.0...494,4
Measuring error (under conditions acc. to DIN ISO 2533 and when installed in DN50 pipes)	
	± (3% of the measured value + 0.3% of the final value of the measuring range)[2]
	± (6% of the measured value + 0.6% of the final value of the measuring range)[3]
Repeatability [% of the measured value]	± 1.5
Measurement dynamics	1:300
Response time [s]	< 0.1 (dAP = 0)
Temperature indication	
Measuring range [°F]	32...140
Measuring error [K]	2 [4]
Operating temperature [°F]	32...140
Medium temperature [°F]	32...140 (rel. humidity: max. 90%)
Storage temperature [°F]	-4...185
Pressure resistance [bar / PSI]	16 / 232
Material (wetted parts)	stainless steel (304S15); ceramics glass passivated; PEEK; polyester; Viton; aluminium anodised
Housing materials	stainless steel (304S15), Viton; PBT-GF 20, PC (APEC); Makrolon
Protection	IP 65 / III
Vibration resistance [g]	5 (DIN / IEC 68-2-6, 55 - 2000 Hz)
EMC IEC 1000/4/2 ESD:	4 / 8 KV
IEC 1000/4/3 HF radiated:	10 V/m
IEC 1000/4/4 Burst:	2 KV
IEC 1000/4/6 HF conducted:	10 V

[1] to EN50178, SELV, PELV

[2] value for air quality class 141 (DIN 8573-1).

[3] value for air quality class 344 (DIN 8573-1).

[4] for medium flow in the limit area of the flow measurement range

All data refer to standard volume flow according to DIN ISO 2533.

12.1 Setting ranges

FLOW	SP1 / SP2		rP1 / rP2		ASP		AEP		ΔQ
	min	max	min	max	min	max	min	max	
scfm	3.7	412.0	0.6	409.9	0.0	309.0	103.0	412.0	0.1
scfh	220	24720	100	24600	0	18540	6180	24720	10

ImPS	min	max
	0.400 scf	4 000 000 scf

(ΔQ = step increment)

13 Factory setting

	Factory setting	User setting
SP1	**4.80 * 10^3**	
rP1	**4.68 * 10^3**	
ImPS	**0.400**	
ImPR	**YES**	
OU1	**Hno**	
OU2	**Hno**	
SP2	**9.60 * 10^3**	
rP2	**9.48 * 10^3**	
ASP	**0.00 * 10^3**	
AEP	**24.72 * 10^3**	
FOU1	**OFF**	
FOU2	**OFF**	
dAP	**0.6**	
rTo	**OFF**	
diS	**d3**	
Uni	**SCFH**	
SELd	**FLOW**	

More information at www.ifm.com

10.33 - I2 – IPEC FINE SCREENS

SLB 636 Screening Compacter Installation, Operation & Maintenance Manual

JWC Environmental®

Trust Monster Quality™

IPEC™

FOR SALES AND SERVICE CALL 1.800.663.8409
WWW.JWCE.COM

Manufactured by **JWC Environmental Canada ULC** for **H2O Innovation Inc. – Nunavut**

Serial Number 9174, 9175

JWC Environmental Canada ULC 2889 Norland Avenue Burnaby, BC V5B 3A9 CANADA Tel: 604-291-7150 Fax: 604-291-7190 Toll Free: 800-663-8409 Email: info@ipec.ca Web Site: www.ipec.ca

UNIT MODEL: SLB 636
IPEC REFERENCE # 16831
SERIAL # 9174, 9175

Trust Monster Quality™

FOR SALES AND SERVICE CALL 1.800.663.8409
WWW.JWCE.COM

2889 Norland Avenue Burnaby, BC V5B 3A9 Canada Tel: 604-291-7150 Fax: 604-291-7190 Toll Free: 800-663-8409

Please have the Serial Number of this unit ready when you call for Service.

OWNER INFORMATION:
H2O Innovation Inc.
201, 1re Avenue
Ham-Nord, G0P 1A0
SITE NAME: NUNAVUT

MANUFACTURER INFORMATION:
JWC Environmental Canada ULC
2889 Norland Ave
Burnaby, BC V5B 3A9
(800) 663-8409 / 604-291-7150

Motor & Drive Information

HELICAL GEAR REDUCER
Manufacturer: SEW Eurodrive
Drive Model #: FAF57
Overall Ratio: 157.09
Output Speed: 11
Output Torque: 325

MOTOR
Manufacturer: SEW Eurodrive
Motor Model #: EDRS71S4/CICIID2
Motor HP: 1/2
Motor Voltage: 575 Volts
Frequency: 60 Hertz
RPM: 1700 RPM

Screen Specifications

PRESS SCREEN
Wire: 93Veewire
Rod: 156"
Rod Spacing: 1" c/c
Slot: 0.020"

DRAIN SCREEN
Size: 16ga
Material: Perforated Plate
Slot: 2mm (5/64") Hole

General Specifications

UNIT SLB 636
65-1/2" long x 38" high x 23" width
Type: Screening Washer/Compactor
Capacity: 88 USGPM [max]
Shipping Weight: 320 lbs

Installation & Start-up Requirements

INSPECTION:

Before uncrating, examine packaging for any obvious damage. After uncrating, inspect for damage or unattached parts. Report any damage to your carrier and also notify IPEC. Check all fasteners to ensure that they did not vibrate loose during shipment.

MOVING SLB 636 UNIT

Care should be used in moving the unit. The screen unit should be lifted up by the frame only, using a forklift or overhead lifting device.

Mechanical Maintenance Schedule Sheet

Follow the lubrication schedule given below.

COMPONENT	FREQUENCY OF LUBRICATION	TYPE OF LUBRICANT	BRAND
Gear Box	Annually	Gear oil	Shell Omala 220

UNIT MODEL: SLB 636
IPEC REFERENCE # 16831
SERIAL # 9174, 9175

2889 Norland Avenue Burnaby, BC V5B 3A9 Canada Tel: 604-291-7150 Fax: 604-291-7190 Toll Free: 800-663-8409

CUSTOMER INFORMATION

Owner Contact Name:	Alexis Morissette	Job #:	16831
Owner Company:	H2O Innovation Inc.	Phone:	418-688-0170 x345
Owner City:	Ham-Nord, QC	Fax:	418-688-9259
Manufacturer Salesperson:	Chuck Frappier	Phone:	604-291-7150
Manufacturer Company:	JWC Environmental Canada ULC	Fax:	604-291-7190

CONSTRUCTION

- 304 Stainless steel

UNIT MODEL:

SLB 636

SLB Spiral Screen
Installation, Operation and Maintenance Manual

About this manual

Thank you for purchasing your IPEC SLB Series Spiral Screen. Please read these instructions before you attempt to install and operate your press. You can refer any questions to the IPEC Service Department.

This manual is divided into nine sections:

Section 1.0 General Information

Section 2.0 Installation

Section 3.0 Operation

Section 4.0 Maintenance

Section 5.0 Troubleshooting

Section 6.0 Components

Section 7.0 Drawings

Section 8.0 Passivation

Section 9.0 Warranty

SLB Series Spiral Screen
Installation, Operation and Maintenance Manual

SLB Series Spiral Screen
Installation, Operation and Maintenance Manual

Table of Contents

Section	1.0	General Description	4
	1.2	Components	4
	1.3	Operation – Automatic Mode	6
Section	2.0	Installation	7
	2.1	Handling Techniques	7
	2.2	Initial Inspection	7
	2.3	Location	7
	2.4	Mounting	7
	2.5	Piping Practices	7
	2.6	Water Flush	7
	2.7	Electrical Connections	7
Section	3.0	Operation	9
	3.1	Start-Up Check List	9
	3.2	Start-Up	9
	3.3	Operations Checks	10
	3.4	Operation	10
Section	4.0	Maintenance	11
	4.1	Lubrication	11
	4.2	Disassembly/Assembly	11
Section	5.0	Troubleshooting	14
Section	6.0	Components	15
Section	7.0	Drawings	
Section	8.0	Passivation	
Section	9.0	Warranty	

Section 1.0 General Information

1.1 General Description

The IPEC SLB Spiral Screen is a device designed to treat primary sewage by removing biologically inert gross solids. The unit washes and compact's the gross solids and removes free moisture. The solids are removed through a discharge outlet positioned to drop into a disposal bin. The treated sewage flows by gravity to a sewer or to further treatment.

The SLB unit utilizes a screw to treat and remove solids from an enclosed housing. The arrangement includes water showers to aid in the separation process. The equipment can be supplied with control devices to feed and treat the wastes to meet fluctuating demands.

Wastewater feed can be by gravity or from a force main.

1.2 Components

The main components of the SLB unit are an open topped receiving tank with an interior substructure to house the primary screening element, the compactor screen, the spiral, the transport tube, the compaction section, the solids discharge fitting and the mechanical drive unit.

1.2.1 Housing

The housing is a rectangular shaped enclosure which anchors to the floor or supporting structure. The housing has the raw water inlet and treated water outlet on the bottom. There is a fixed, cylindrically shaped partition between the inlet and the outlet. The housing has a bolt on cover with an inspection door.

1.2.2 Screen

The screen is perforated plate or wedgewire formed in a semi-cylindrical shape. The screen is positioned at a 35° slope with the bottom end resting on the housing bottom. The open side of the screen semi-cylinder is oriented to the inlet side to allow the raw influent to enter into the interior of the screen profile. The screen has axial support bars along the side. The screen thereby partitions the housing into the inlet (raw wastewater) and outlet (filtered water) sections.

1.2.3 Transport Tube

The transport tube is a section of pipe through which solids are transferred from the screen to a level above the maximum water level of the housing and into the compaction section.

1.2.4 Compaction Section

The compaction section is attached to the top end of the transport tube. The press tube contains a cylindrical screen constructed from axially aligned wedgewire that allows passage of water extracted from solids that are compressed in this zone. The compaction section contains shower nozzle ports where water is injected to flush away fine solids.

1.2.5 Discharge Fitting

The discharge fitting is the final part of the cylindrical solids enclosure. It mounts on the outside of the housing in the top corner. The fitting has a vertically directed spout that directs solids into a collection bin. The discharge fitting has an access door to allow inspection of the compacted solids. Drive mounting plates are installed on the top end of the discharge fitting.

1.2.6 Spiral

The solids spiral is a structured, shaftless screw that rotates within the screen, transport tube and compaction section.

The spiral has a drive shaft welded on one end. The spiral of the spiral extends only partially into the press zone.

The spiral has nylon brushes fastened along the outer edge of the flights on the section contacting the screen basket.

1.2.7 Drive

The drive is a flange mounted helical gear motor with hollow bore that is attached directly to the spiral shaft. The gear motor bearings support the radial and axial loads of the spiral.

A shaft seal is installed between the housing and drive to prevent effluent leakage around the drive shaft.

1.3 Operation – Automatic Mode

Raw sewage is fed to the inlet section of the tank by pump or gravity. Gross solids will be retained on the screen raising the water level in this section.

The spiral moves solids along the screen, then along the transport tube to the press zone. In the press solids zone, solids are allowed to accumulate, eventually forming a plug of compacted solids. Free water passes through the openings in the press section. At the top of solids discharge auger, discharge spouts direct the solids, by gravity to solids disposal bins.

During influent operation and periodically otherwise, the shower water solenoid valve will open, feeding water into the press zone. The application of water into the press section washes contaminant solids (i.e. fecal) from the solids plug.

Wastewater that passes through the screen flows to a discharge port. In the event that the screen blinds or the auger drive stops. A high level float switch shall signal a stop command for the influent.

Section 2.0 Installation

2.1 Handling Techniques

Care should be used in moving the unit. The screen unit should be lifted up by the frame only, using a forklift or overhead lifting device.

2.2 Initial Inspection

Examine the equipment for any obvious damage or misalignment. Tighten any nuts and bolts that may have loosened during shipment.

2.3 Location

Located the unit suitably to permit direct gravity discharge of pressed solids to a pit or bin. Ensure there is sufficient room for inspection and maintenance. For best access for disassembly of the unit, space to remove the screw (one screw length) should be provided in front of the discharge end. To remove the drive, ten inches is required at the drive end.

2.4 Mounting

The SLB is mounted on base plate legs. Ensure that all four legs are mounted level and secured with cap screws or anchor bolts.

2.5 Piping Practices

All piping should be supported independently and lined up with the inlet, outlet and drain connections. NEVER DRAW PIPING INTO PLACE BY USE OF FORCE AT THE FLANGED CONNECTION OF THE PRESS.

2.6 Water Flush

Connect water line to NPNT port on press zone. For manual operation, install shut off valve (1/4 turn ball valve) near inlet. For application requiring frequent flushing, install automatic valve (solenoid). Supply appropriate timers or PLC control circuitry to sequence.

2.7 Electrical Connections

Connect power wiring to motor. Press can be operated using start signal to cross the line motor starter. Start should be interlocked to the infeed signal. A delay function on

the infeed signal is recommended, timed to clean the screening areas before periods of shutdown.

A frequency drive speed controller is sometimes required for best operation of the screen. See Section 3.4. Check motor data to confirm ranges possible with motor supplied.

A float switch is installed in the inlet area. Connect the float so that the influent is shut down when the water level reaches a high (flood) level.

Section 3.0 Operation

3.1 Start-Up Check List

3.1.1 Lubrication – Ensure that the drive has adequate oil level as per the manufacturer's instruction manual. The shaft bearing has been lubricated before shipment. Remove the breather plug from the gearbox vent fitting.

3.1.2 Electrical – With motor power and control power locked out, check all conductor terminations and grounding. Check circuitry or operation switches and make and break contact on safety switches.

3.1.3 Piping – Check drainage and water shower connections.

3.1.4 Remove covers from the press area and the influent screen area.

3.1.5 Screw – Inspect along the full length of the screw. Remove all package materials and temporary bracing and assembly/construction debris. Ensure that no steel or other hard objects of in contact with the screw.

3.1.6 Check E-stop and float switch contacts.

3.2 Start-Up

3.2.1 Start up the screen drive to rotate screw. Check for proper rotation (clockwise from the drive end). Initially, run the drive at a low speed (20 Hz). There may be some minor scraping noises since the screw rides on the liners and screen.

The noises will disappear during actual operation due to the formation of a solids plug in the press zone.

3.2.2 Start influent, ensure that the flow is within the specified range and does not splash above the sidewalls.

3.2.3 Ensure there is no leakage through the shaft seal. If leakage occurs, tighten the gland strap as per the Durashield instruction manual.

Set the system to Auto mode, set sequencing timers on the screw drive and shower operation. The shower cycle should be timed to remove all fecal and soft organic solids. Typically this is on for 5 seconds every 60 – 90 seconds of screen drive influent feed operation.

3.3 Operation Checks

3.3.1 Inspect the spiral screen carefully and frequently during the first few hours of operation. Check complete unit for excessive vibration or unusual noises.

3.3.2 The screen elements may “blind” due to build up of solids lodged between the screw and the screen element. If blinding is a persistent problem, check with the factory.

3.3.3 Check formation of the plug in the press zone. This should form within one day of operation.

3.4 Operation

3.4.1 The shaftless spiral screen is designed to remove solids from sewage. Extracted solids are washed so that soft organic material remains in the filtrate; the solids are then compacted to remove free water.

3.4.2 The screen can work with varying influent feeds. It is best to match operating sequence and speeds with the infeed rate. This avoids wear on the screen and brushes. A solids plug is always formed at the discharge end. To prevent this plug from solidifying, avoid long periods of non-use. During these times operate the shower system on a periodic cycle to keep the plug moist and free. During normal operations the shower is operated periodically to flush the fine solids expressed through the screen.

Section 4.0 Maintenance

4.1 Lubrication

Follow the lubrication schedule given below.

COMPONENT	FREQUENCY OF LUBRICATION	TYPE OF LUBRICANT	BRAND
Gear Box	Annually	Gear oil	Shell Omala 220

4.2 Disassembly/Assembly

4.2.1 Influent End Disassembly

a. Lock out power. Access junction box on motor and disconnect power wires from terminal studs. Disassemble conduit at union adapter then remove wiring from electric motor. Remove friction fit dust cap from end of drive; remove hex cap bolt and heavy duty washer from end of shaft. Remove the four (4) hex nuts holding the drive flange on to the end plate of the press housing.

b. Slide the drive axially away from the screw shaft until mostly free, and then insure drives is supported by the hoist. If the drive is locked tightly onto the screw shaft due to long term drying of the shaft compound, the drive can be broken free using the extractor nut located between the shaft and the outboard end of the hollow drive shaft. Use a 7/8" NC hex capscrew, threaded into the extractor nut. Turning the capscrew through the nut and against the screw shaft will force the drive away from the shaft.

4.2.2 Discharge Fitting

a. Remove bolts on the end of the discharge fitting. Plug will have formed within, so some vertical force will need to be applied to remove the fitting.

4.2.3 Press Screen Removal

a. Remove discharge fitting as per instruction 4.2.2 (a). Dislodge any built up solids in the plug zone and manually remove. Access the press zone screen cylinder through the end and top openings to slide it out through the end. Due to dried press solids along the screen flange, it may be necessary to first apply dislodging force along the screen perimeter, using a mallet or a small pry bar.

4.2.4 Screw Removal

The screw can be removed from either end. It is simpler to remove through the discharge end, since the drive would be left intact. In either case the top covers should be removed.

a. To remove the screw through the discharge end, first remove the discharge fitting as per instruction 4.2.2(a). Remove all solids in the plug area in the press zone. At the drive, remove the dust cap and shaft securing bolt and washer. Slide the screw axially towards the discharge end. If the shaft does not move freely from the drive bore, use the extraction nut (see instruction 4.2.1). During removal the screw will need to be supported using a sling, overhead hoist, or lifting bar.

b. To remove the screw through the influent end, first remove the end plate by removing the flange fasteners. The screen can be removed by sliding axially towards the discharge end. Once free of the press zone screen and/or influent fitting, the screw can be lifted out of the housing, support by slings and overhead hoist.

4.2.5 Influent Screen Brush Replacement

a. Brush is supplied in one (1) revolution segments.

b. Remove screen as per 4.2.4

c. Remove the brush and clean the screw of any residue solids. Using vice grips or 'C' clamps, position the replacement brush segment onto the screw, ensuring that the mounting holes on the brush align with the corresponding tapped holes on the screw. Apply no-cease compound to the stainless steel fasteners, then install and tighten.

4.2.6 Assembly

The compactor unit should be assembled in the following sequence: liner; screens; screw; seal; drive; shower bars and nozzles; discharge fitting; covers. Some modification to this sequence is possible since the screw can be inserted from either end and some components do not necessarily block access to other components.

a. Screens
The influent end screen is attached, and bolts to the saddle mount in the inlet section. Place the screen into position, ensuring that it is in contact with the housing all along the entire perimeter of the screen.

Slide the press zone screen through the discharge end opening. Align holes in the screen flange to mate with the anti-tortional pin on the housing. Position the screen so that the screen end is flush with the housing. Place the discharge end plate onto the end of the compactor housing and fasten.

b. Screw

Place the screw into the trough and slide the screw, axially, to extend into the compactor screen. Rest the screw in a temporary position with the shaft fully within the housing.

c. Drive

Place seal on four studs attached to the influent end plate. Mount the influent end plate on to the flanged ends of the housing and install fasteners. Place neoprene gasket into recessed ring. Lift drive and align drive mounting flange with studs on the end plate. Position the drive so that the flange mates with the corresponding recess on the end plate fasten using hex nuts and lockwashers.

Apply no-seize compound to shaft, drive bore and keyway. Slide screw shaft into bore of drive, install key into keyway. From the drive side, place the extractor nut into hollow bore and install the snap ring into the groove located about 1” from the end of the hollow bore. Insure that the screw shaft extends fully to the extractor nut snap ring and secure using the hex head bolt and heavy duty washer. Replace dust cap, slide the seal into the slot and secure.

d. Shower Nozzles

All nozzles and shower pipe sections are mounted with nozzles aligned with the slots on the screen.

Section 5.0 Troubleshooting

5.1 Troubleshooting

PROBLEM	CAUSE	CORRECTIVE MEASURE
Screeching noise	Contact of screw with screw or frame.	◦ Screw bent - remove and straighten or replace. ◦ Screw can be deflected due to tension - reduce pressure on pressure plate. ◦ Material caught in screw - manually remove material.
Influent screen is blinded	Brushes worn or misaligned	◦ Replace brushes
Leak at drive shaft	Seal worn Seal gland to loose	◦ Replace gland ◦ Remove dust screen on seal body, tighten band strap on gland using flat head screw driver

Section 6.0 Components

Components	Description	LH Part No.	RH Part No.	Rec. Spare
Enclosure	Housing	19636	12636	
	Discharge End Plate	17181	17181	
	Cover 1	148018	148018	
	Cover 2	148118	148118	
	Cover 3	148112	148112	
Screens	Screen	70718.078	70718.078	
	Press Screen	70612.020	70612.020	
Screw	Tube Section	77606	77606	
	Screw	29736	20736	
	Screw Guide	27201	27201	
	Brush	20201	20201	4
Mechanical Assembly **Drive: Helical Gear Drive Mfr: *SEW Eurodrive* Model: FAF57EDRS71 S4/CICIID2 Ratio: 157.09 : 1 1/2 hp, 575/3/60, Class 1, Div 2	Drive	**	**	
	Extractor Nut – 37 mm	4515	4515	
	Shaft Seal – 1 1/2" HDNS	5151	5151	
	Motor Mount	10657	10657	
Spray System	Press Header	505041	505041	
	Spray Bar (1)	50507	50507	
	Spray Bar (2)	50510	50510	
	Nozzle Long Arm (4)	5705	5705	1
	Nozzle Short Arm (1)	5915	5915	1
	Screen Header			
	Long Arm	50516	50516	
	Short Arm	50518	50518	
	Nozzle Side Flush (4)	5705	5705	
	Nozzle Screen Flush (3)	5705	5705	
Bagger	Bagger	82840	82840	
	Bags	84072	84072	

Project No.: 16831
Serial Number: 9174, 9175
Date of Manufacture: 08/16

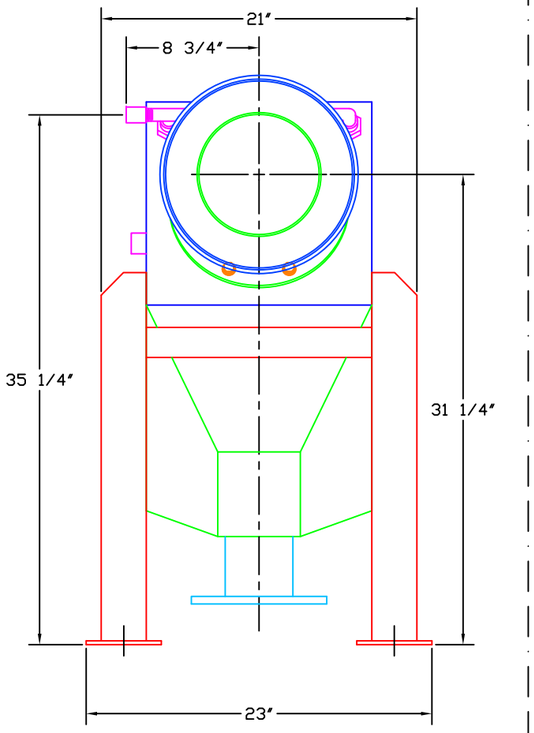

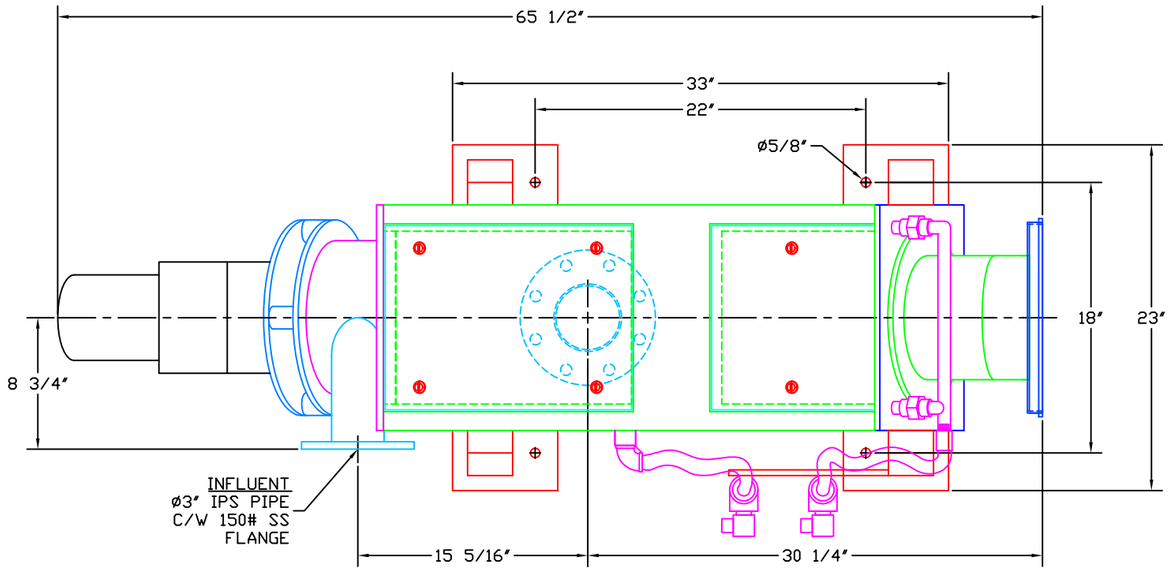

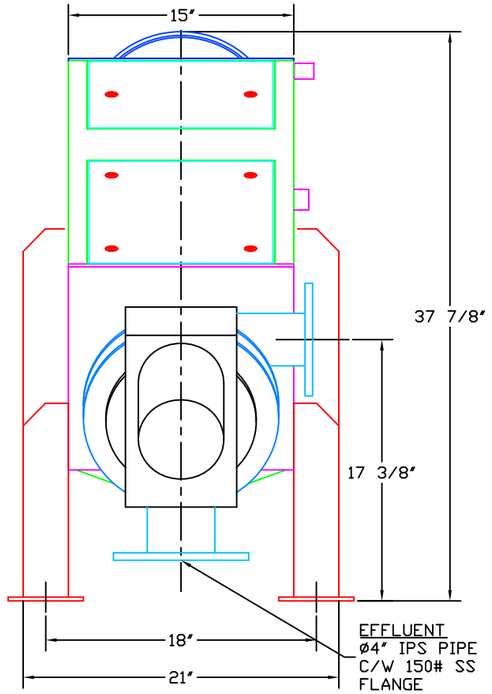

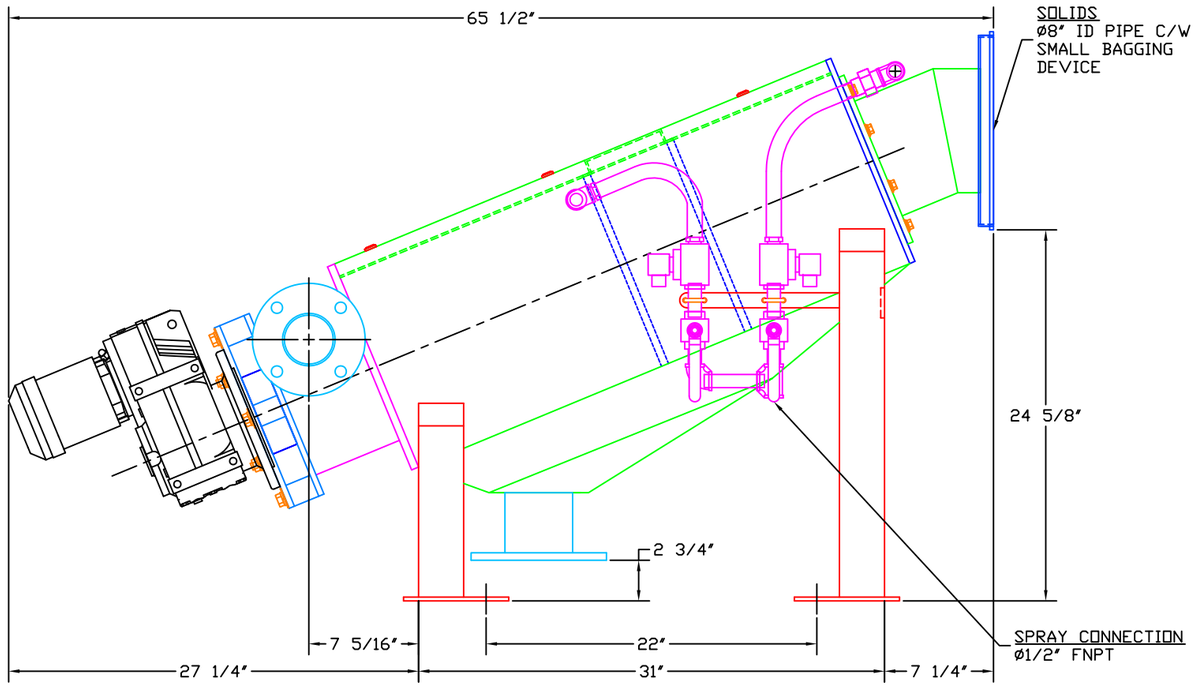

COMPONENTS

ITEM	P/N	DESCRIPTION
1		PRESS SCREW DIM: ø5 1/2" X 36" OAL SPEC: SHAFTLESS 1 1/2" ID 4 1/2" PITCH ø1 1/2" DRIVE SHAFT CONST.: 1/2" PLATE MATERIAL: 304 SS
2		SCREEN ELEMENT DRAIN ZONE: 16 ga 2 MM 6" ID X 18" CYLINDER PRESS ZONE: 6" ID X 12" CYLINDER #90/LSR @ 1" 0.020" SLOT 3/8" PLATE END FLANGE MATERIAL: 304 SS
3		ENCLOSURE: DIM: AS NOTED CONST: 10 GA MATERIAL:304 SS FITTINGS: SOLIDS ø8" INLET: 3" SS. 150# FLANGE EFFLUENT: 4" SS. 150# FLANGE
4		DRIVE SYSTEM DRIVE UNIT: SEW EURODRIVE MODEL: FAF57EDRS71S4 MOTOR: 1/2 HP TEFC 600/03/60 1750 RPM
5		PRESS WASH CONST: 1/2" SCH80 5 NOZZLE AXIAL 3 GPM @ 40 PSI
6		SCREEN WASH CONST: 1/2" SCH80 7 NOZZLE AXIAL 3.5 GPM @ 40 PSI (2) 1/2" SOLENOID VALVE (2) 1/2" BALL VALVE
7		ACCESSORIES SMALL BAGGING DEVICE EPOXY COATING INSIDE & OUT

WEIGHTS

SHIPPING: 320 LBS
OPERATING: 480 LBS
FLOODED: 650 LBS

SERVICE

- TO SCREEN, CONVEY, COMPACT AND WASH 22 USGPM (AVG.), 88 USGPM (PEAK) PUMPED DOMESTIC MUNICIPAL EFFLUENT
- TSS: 250 mg/L
- MAXIMUM SOLIDS LOADING DOES NOT EXCEED 450 mg/L

SYM.	DESCRIPTION	DATE	BY

REVISIONS

CUSTOMER: H20 INNOVATION INC.	TITLE: SCREENINGS COMPACTOR GENERAL ARRANGEMENT	IPEC IPEC CONSULTANTS 2889 NORLAND AVE. BURNABY B.C CANADA V5B 3A9 1 800 663 8409
QUOTE NO: 20150821	PROJECT: 16831	SCALE: *****
DRAWN: A.R.C.	CHK'D: A.R.I.	DWG. NO: SLB636351 REV. 0
DATE: JUNE 23, 2016	DATE: JUNE 23, 2016	

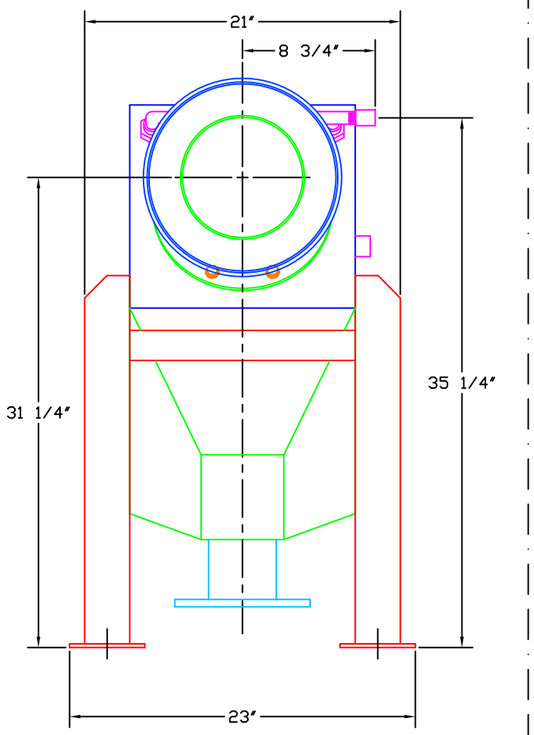

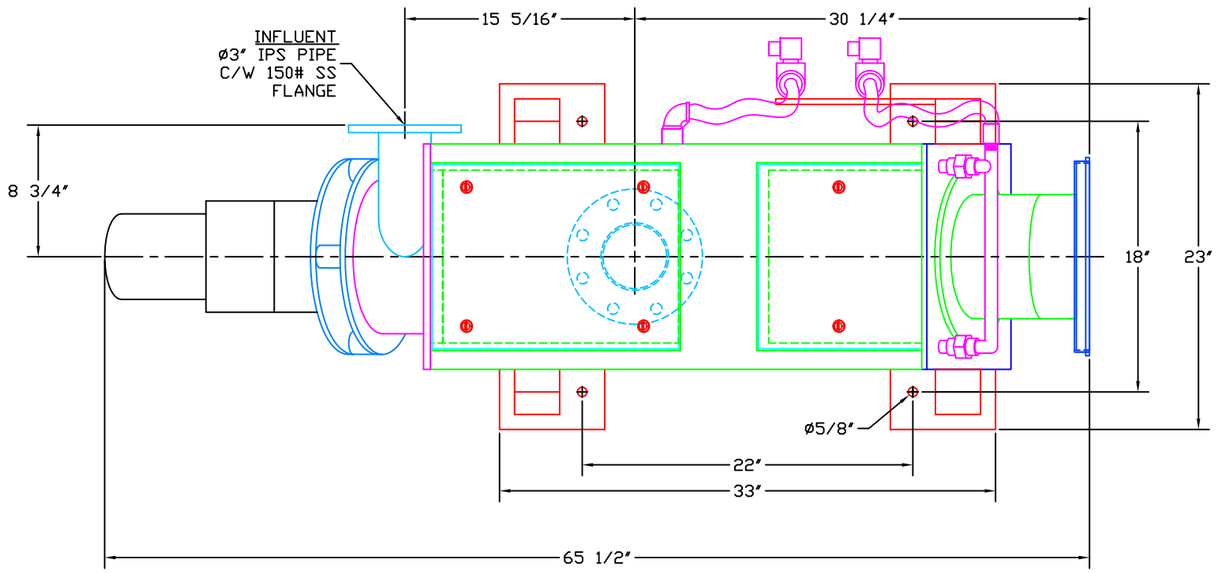

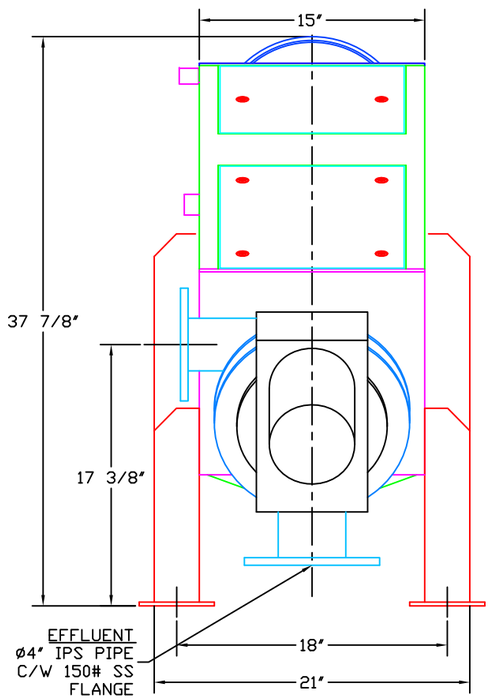

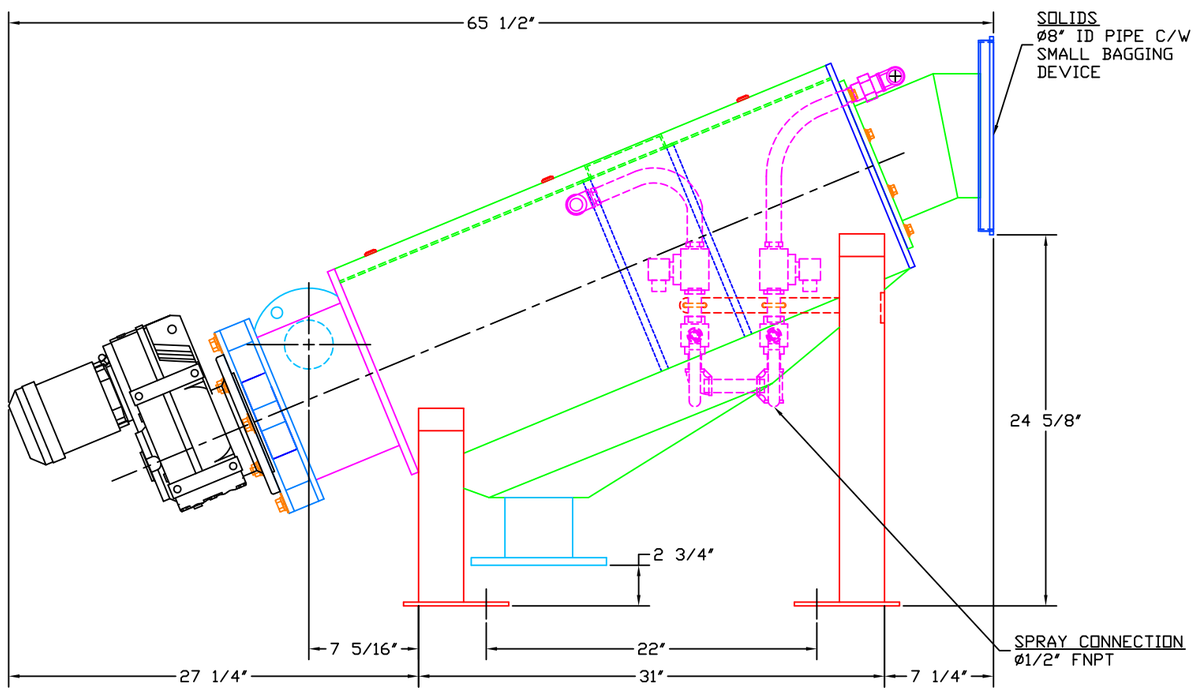

COMPONENTS

ITEM	P/N	DESCRIPTION
1		PRESS SCREW DIM: ø5 1/2" X 36" OAL SPEC: SHAFTLESS 1 1/2" ID 4 1/2" PITCH ø1 1/2" DRIVE SHAFT CONST.: 1/2" PLATE MATERIAL: 304 SS
2		SCREEN ELEMENT DRAIN ZONE: 16 ga 2 MM 6" ID X 18" CYLINDER PRESS ZONE: 6" ID X 12" CYLINDER #90/LSR @ 1" 0.020" SLOT 3/8" PLATE END FLANGE MATERIAL: 304 SS
3		ENCLOSURE: DIM: AS NOTED CONST: 10 GA MATERIAL:304 SS FITTINGS: SOLIDS ø8" INLET: 3" SS. 150# FLANGE EFFLUENT: 4" SS. 150# FLANGE
4		DRIVE SYSTEM DRIVE UNIT: SEW EURODRIVE MODEL: FAF57EDRS71S4 MOTOR: 1/2 HP TEFC 600/03/60 1750 RPM
5		PRESS WASH CONST: 1/2" SCH80 5 NOZZLE AXIAL 3 GPM @ 40 PSI
6		SCREEN WASH CONST: 1/2" SCH80 7 NOZZLE AXIAL 3.5 GPM @ 40 PSI (2) 1/2" SOLENOID VALVE (2) 1/2" BALL VALVE
7		ACCESSORIES SMALL BAGGING DEVICE EPOXY COATING INSIDE & OUT

WEIGHTS
SHIPPING: 320 LBS
OPERATING: 480 LBS
FLOODED: 650 LBS

SERVICE
- TO SCREEN, CONVEY, COMPACT AND WASH 22 USGPM (AVG.), 88 USGPM (PEAK) PUMPED DOMESTIC MUNICIPAL EFFLUENT
- TSS: 250 mg/L
- MAXIMUM SOLIDS LOADING DOES NOT EXCEED 450 mg/L

SYM.	DESCRIPTION	DATE	BY

REVISIONS

CUSTOMER: H2O INNOVATION INC.	TITLE: SCREENINGS COMPACTOR GENERAL ARRANGEMENT	IPEC IPEC CONSULTANTS 2889 NORLAND AVE. BURNABY B.C CANADA V5B 3A9 1 800 663 8409
QUOTE NO: 20150821	PROJECT: 16831	SCALE: *****
DRAWN: A.R.C. DATE: JUNE 23, 2016	CHK'D: A.R.I. DATE: JUNE 23, 2016	DWG. NO: SLB636361 REV. 0

2889 Norland Avenue Burnaby, BC V5B 3A9 Canada Tel: 604-291-7150 Fax: 604-291-7190 Toll Free: 800-663-8409

Passivation Process/Surface Treatment

Welds:

Welds shall be acid passivated. Pickling paste AVESTA 101 shall be brushed on all welds and overlap into heat affected zones. Paste shall be left on for 1-2 hours before water flush and neutralization with soda ash solution.

Surface:

All surface blemishes and weld tacks shall be blended smooth using Walters blender disc. [80 grit]

The complete surface shall be glass bead polished to uniform finish using #6 glass beads. After polishing the surface shall be rinsed then passivated using citric acid solution. Solution shall be mixed at a ratio of 4 parts water to 1 part dry citric acid powder [by volume]. Solution shall be sprayed onto screens and left for 30 minutes before water flushing the complete surface.

A clear film coating shall be applied to the surface before assembly. The coating shall be EVERBRITE ProtectaClear.

PROTECTA Clear™
An Everbrite Coating

- One Part Coating – No Mixing, No Waste.
- Crystal Clear Coating. Will not hide the natural beauty of the metal.
- Formulated for use on Non-Painted or Plated Metals: Copper, Brass, Silver, Stainless Steel, Anodized Aluminum, Bronze, Polished Aluminum, Alloys and more. Can also be used on Painted Metals for protection from salt or chlorine.
- Extremely Durable, Scratch and Abrasion Resistant.
- Long Term protection from corrosion, oxidation, rust, tarnish and fading. Extra Protection from Salts & Chlorines.
- Highly Corrosion Resistant. Retards Tarnish & Oxidation. Protects from salt water, salt air, chlorine, acid rain, bleach, bird droppings, mildew, etc.
- Will not chip, crack, peel or yellow when applied as directed.
- Will bond to itself - No sanding or priming needed to apply or reapply.
- Non-Conductive – Prevents Harmful Electrolysis.
- The dry, cured film is Non-Toxic.
- Easy to apply – Self Leveling – Easily recoated.
- Dries quickly, 5 – 15 minutes – No Residual Smell after 30 - 45 minutes.
- Economical – will refinish and protect approx.1000-1200 sq. ft. per gallon.
- Indefinite Shelf Life in closed container.
- Environmentally Friendly, California Compliant.

ProtectaClear™ is a crystal clear polymeric resin blend that provides long term indoor & outdoor protection on metal with extra resins that are highly resistant to salt or chlorine corrosion. Formulated for use on non-painted metals: Copper, Brass, Bronze, Stainless Steel, Aluminum, and other non-painted or plated metals. ProtectaClear™ can also be used on painted metals to protect from salt corrosion or chlorines. ProtectaClear™ has an impermeable finish that provides outstanding protection against damage caused by corrosion, ultra violet rays, salt water, salt air, acid rain, pollution, mildew, bird droppings, bleach, etc. ProtectaClear™ reduces maintenance and cleaning. Resists dirt, water, mildew and algae. Reduces fingerprints and smudges on stainless steel. ProtectaClear™ will not chalk, crack, peel, yellow or discolor from exposure. ***Not recommended for use on soft plastic, soft vinyl or rubber. Test small area first.*

Surface Preparation: **For tarnished or oxidized metal,** clean and polish metal. Most metal polishes have an acid that MUST be neutralized. Use EZPrep Cleaner & Neutralizer mixed 1:8 with water. Baking soda or calcium carbonate and water can also be used. Wash with the neutralizing solution, rinse & dry the metal. Solvent wipe with xylene or denatured alcohol to remove fingerprints or polish residue. Apply ProtectaClear™ & let it dry. ProtectaClear™ will self-level as it dries. **For new metal or metal with patina**, solvent wipe & apply ProtectaClear™. The solvent will not change the level of tarnish or patina.

Application: Provide adequate ventilation & remove all sources of ignition or sparks. Apply a single coat that thoroughly wets the surface. Allow to dry. No buffing or polishing required. When first coat is dry, a second coat can be applied for extra protection. Apply ProtectaClear™ with sprayer, high-density foam roller, sponge brush or applicator or clean, white, lint-free cloth pad. Dries to touch in 5-15 minutes. No residual smell after one hour. If necessary, ProtectaClear™ can be removed with xylene. ProtectaClear™ will bond to itself. If an area is missed, let the ProtectaClear™ dry, then apply over the missed area. Some applications like steel may require more than one coat. Additional coats can be applied after the preceding coat is dry to the touch. To re-coat an aging ProtectaClear™ coated surface, clean thoroughly with soap and water, rinse thoroughly, allow to dry completely and re-apply or remove the coating with solvent and re-apply. ProtectaClear™ is self-adhering. No priming or sanding is necessary. **AFTER CARE: Coated surface cleans up easily with just soap & water – Do Not Use cleaners with solvents to clean the coated surface. Suggested cleaners: Mild soap & water, Windex, 409, or similar. Mineral Spirits can also be used. Do NOT use Denatured alcohol, xylene or other solvents.**

Caution: Combustible liquid. Material does not sustain combustion. Do not smoke or use near flame. Use with adequate ventilation. Avoid continuous breathing vapor or spray mist. Wear personal protection, chemical resistant gloves, protective eye wear. When spraying, wear NIOSH approved respiratory mask. Avoid prolonged contact with skin. Store in cool, dry place. **DANGER: HARMFUL OR FATAL IF SWALLOWED. KEEP OUT OF REACH OF CHILDREN. First Aid**: In case of eye contact, flush thoroughly with plenty of water for 15 minutes and get medical attention. For skin contact, wash with soap and water. In case of respiratory difficulty, provide fresh air and call a physician. **Notice:** Reports have associated repeated and prolonged occupational overexposure to solvents with damage to health. Intentional misuse by deliberately concentrating and inhaling the contents may be harmful or fatal. **Read all directions and cautions on MSDS.** This product is sold without warranty as to performance, expressed or implied. Users are urged to make their own test to determine the suitability for their particular conditions.

Everbrite, Inc. Reno, NV 800-304-0566 www.ProtectaClear.com

Standard Warranty

2889 Norland Avenue Burnaby, BC V5B 3A9 Canada
Tel: 604-291-7150 Fax: 604-291-7190 Toll Free: 800-663-8409

JWC-IPEC warrants that the goods sold are fit for the particular purpose of use for which they were offered, and that they conform with, and will perform in accordance with the Purchaser's specifications.

JWC-IPEC also warrants the goods against any defects in material, workmanship and design for the entire warranty period.

JWC-IPEC warrants, for a period of 12 months from the delivery of equipment, that any component that is defective shall be replaced.

All warranty claims must be submitted to JWC-IPEC in writing, either by mail, fax or email.

Mailing Address: JWC Environmental Canada ULC
2889 Norland Avenue
Burnaby, BC V5B 3A9

Fax Number: 604-291-7190

Email Address: admin@ipec.ca

Parts List

42 252 06 99

Parallel shaft helical gear unit
FAF57, FHF57, FVF57

3-stage

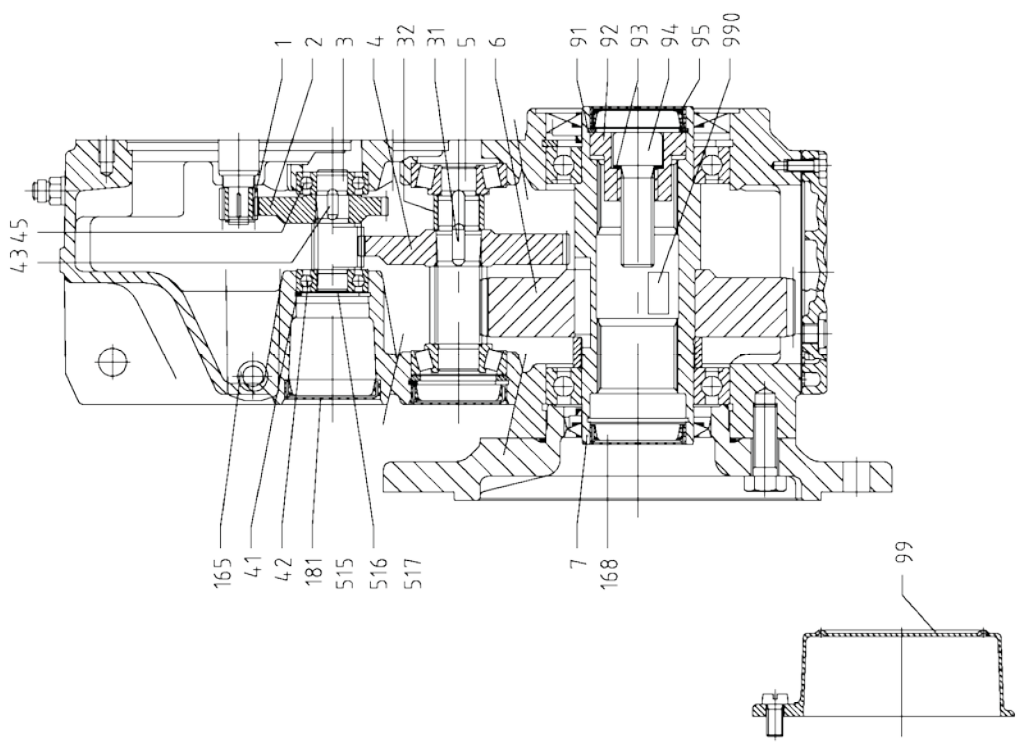

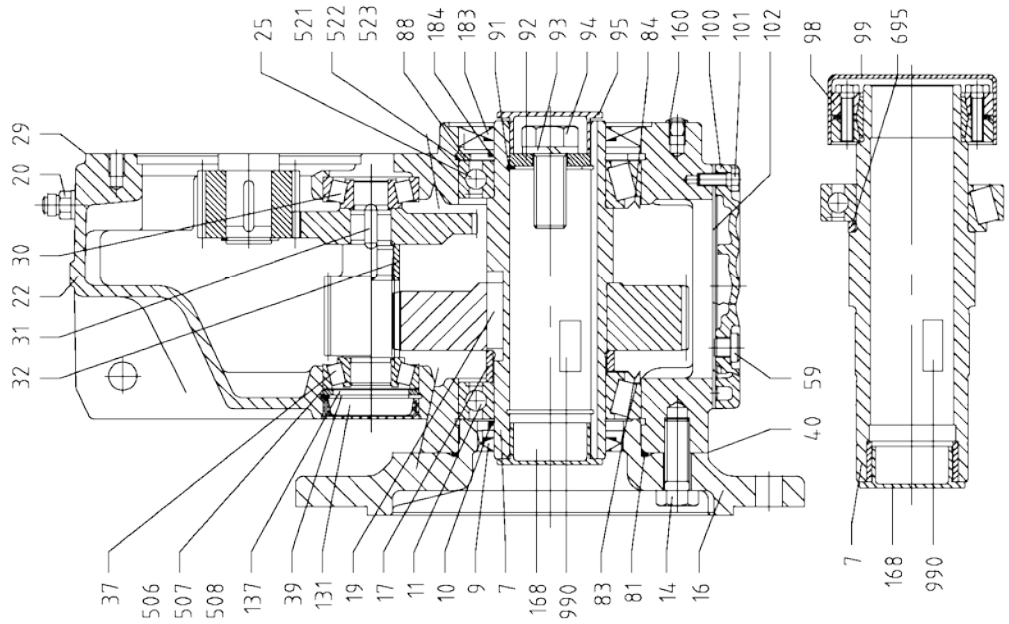

2-stage

When ordering spare parts always quote nameplate data with serial number and designation with part number!
Mount-on gear units have motors, variable speed gear units or special input shaft assemblies mounted on the drive end. For parts see appropriate parts list.

Copyright reserved! All rights reserved according to DIN ISO 16016.

No.	Description	Additional specifications	SEW standard label	Part No.	Qty.
1	Pinion			*	1
2	Gear			*	1
3	Pinion shaft			*	1
4	Gear			*	1
5	Pinion shaft			*	1
6	Gear			*	1
7	Hollow Shaft	FAF57	Ø 40 mm	06435440	1
7	Hollow Shaft	FAF57; stainless; ASEPTICplus	Ø 40 mm	00453145	1
7	Hollow Shaft	FAF57; Reinforced bearings	Ø 40 mm	00461210	1
7	Hollow Shaft (inch)	FAF57	Ø 1,500 in.	06435653	1
7	Hollow shaft complete	FHF57	Ø 40 mm	06435475	1
7	Hollow shaft complete	FHF57; Reinforced bearings; reduced backlash version	Ø 40 mm	00461040	1
7	Hollow shaft complete	FHF57; Standard bearing & Reinforced bearings; reduced backlash version; stainless	Ø 40 mm	00469009	1
7	Hollow shaft complete	FHF57	Ø 40/42 mm	0643696X	1
7	Splined hollow shaft	FVF57	35x2x30x16	06435459	1
9	Oil seal		W BASF55x72x10/7-NBR	00177865	1
9	Oil seal	optional oil seal in FKM; ATEX model according to category II2G, II2D, II3G, II3D; ASEPTICplus	W BASF55x72x10/7-FKM	00178268	1
10	Oil seal	Double sealing; ATEX model according to category II2G, II2D, II3G, II3D; ASEPTICplus	W B1SF55x67x8/11,5-FKM	00173894	1
11	Deep groove ball bearing		6011-Z	00117404	1
11	Tapered roller bearing	Reinforced bearings; FHF57 in reduced backlash design	32011X	00139211	1
14	Hex head screw		ISO4017 M12x35-8.8-A2F	00101230	6
16	Output Flange		Ø 250 mm	06430392	1
17	Spacer tube		Ø56xØ63x15,5 mm	06435726	1
17	Spacer tube	Reinforced bearings; FHF57 in reduced backlash design	Ø56xØ63x10,2 mm	00456705	1
19	Key		DIN6885-1 B12x8x32 55HRC	00116300	1
20	Breather valve		W4087 M10x1-CuZn-HEI	00130303	1
20	Breather valve	stainless; ASEPTICplus	W4087 M10x1-Niro-HEI	00136239	1
22	Gear Housing			06421210	1
25	Deep groove ball bearing		6011-Z	00117404	1
25	Tapered roller bearing	Reinforced bearings; FHF57 in reduced backlash design	32011X	00139211	1
29	Sealing compound			09102558	X)
30	Tapered roller bearing		30303	00124648	1
31	Key	2-stage	DIN6885-1 B6x6x16 55HRC	00116017	1
31	Key	3-stage	DIN6885-1 B6x6x14 55HRC	00116149	1
32	Spacer tube	2-stage; For i 10,64 - 40,13	Ø22,4xØ28x17,5 mm	0642127X	1
32	Spacer tube	3-stage	Ø20,6xØ25x17,5 mm	06421288	1
37	Tapered roller bearing		30204	00121398	1
39	Circlip		DIN472 47x1,75-FS	00103187	1
40	Sealing compound			09102558	X)
41	Circlip		DIN472 35x1,5-FS	00103144	1
42	Deep groove ball bearing		6202	0010485X	1
43	Key		DIN6885-1 B5x5x10 55HRC	00114839	1
45	Deep groove ball bearing		6202	0010485X	1
59	Screw plug		W4085 M10x1-St-ADC3K	0011426X	5

* Gearing parts have embossed part numbers. These must always be quoted!
X) if required
When ordering spare parts always quote nameplate data with serial number and designation with part number!
Mount-on gear units have motors, variable speed gear units or special input shaft assemblies mounted on the drive end. For parts see appropriate parts list.

Copyright reserved! All rights reserved according to DIN ISO 16016.

No.	Description	Additional specifications	SEW standard label	Part No.	Qty.
81	O-ring		W4283 88x3-NBR70	00176605	1
83	Sealing Washer	Reinforced bearings; FHF57 in reduced backlash design	W4587 32011X-AV	00136573	1
84	Sealing Washer	Reinforced bearings; FHF57 in reduced backlash design	W4587 32011X-AV	00136573	1
88	Circlip		DIN472 90x3-FS	00103268	1
91	Circlip	FAF57	DIN472 40x1,75-FS	00103160	1
91	Circlip	FAF57; stainless; ASEPTICplus	W4161 40x1,75-Niro	00130230	1
91	Circlip	FAF57; For inch hollow shaft	DIN472 38x1,5-FS	08069328	1
91	Circlip	FVF57	DIN472 37x1,5-FS	00103152	1
92	Disc	FAF57	W4126 17x39,5x6-St	01039733	1
92	Disc	FAF57; stainless; ASEPTICplus	W4126 17x39,5x6-A1	00130249	1
92	Disc	FAF57	W4126 11/16x1,48x3/16-St	08069425	1
92	Disc	FVF57		01174037	1
93	Lock washer	FAF57	W4146 A16-FS-Q3F	00109959	1
93	Lock washer	FAF57; stainless; ASEPTICplus	W4146 A16-A2	00130273	1
93	Supporting disc	FVF57	DIN988 S10x16x1,2-FS	00124079	1
94	Hex head screw	FAF57	ISO4017 M16x40-8.8-A2F	00101273	1
94	Hex head screw	FAF57; stainless; ASEPTICplus	ISO4017 M16x40-A2-70	00130265	1
94	Hex head screw	FAF57	ASME-B18 5/8-11x1-3/4-A2F	08069573	1
94	Machine screw	FVF57	ISO4762 M10x30-8.8-A2F	00101443	1
95	Closing plug	FAF57	W4299 1-40,6-PE-LD-BK	01140930	1
95	Closing plug	FAF57; For inch hollow shaft	W4299 1-38,8-PE-LD-BK	01146645	1
95	Closing cap	FVF57	W4300 1-37x7	00124966	1
98	Shrink Disc	FHF57	W4941 DK-48x80	00139920	1
98	Shrink Disc	FHF57; stainless	W4941 DK-48x80-Niro	19067747	1
99	Hood Cover	FHF57		01140922	1
99	Hood cover complete	FHF57		06435157	1
99	Hood cover complete	FHF57; ATEX model according to category II2G, II2D, II3G, II3D; stainless		06435866	1
100	Gearcase cover			06421237	1
101	Hex head screw		ISO4017 M6x16-8.8-A2F	00101052	10
102	Gasket			06421245	1
131	Closing cap		W4300 1-47x10	00106909	1
137	Supporting disc		DIN988 S37x47x2,5-FS	00103519	1
160	Closing plug		W4299 1-7,2-PE-LD-NA	00136042	2
165	Closing plug		W4299 1-10,3-PHT-NA	00113727	8
168	Closing plug	FAF57; FHF57	W4299 1-40,6-PE-LD-BK	01140930	1
168	Closing plug	FAF57	W4299 1-38,8-PE-LD-BK	01146645	1
168	Closing cap	FVF57	W4300 1-37x7	00124966	1
181	Closing cap		W4300 1-47x10	00106909	1
183	Oil seal		W BASF55x90x10/7-NBR	00177644	1
183	Oil seal	optional oil seal in FKM; ATEX model according to category II2G, II2D, II3G, II3D; ASEPTICplus	W BASF55x90x10/7-FKM	00178047	1
184	Oil seal	Double sealing; ATEX model according to category II2G, II2D, II3G, II3D; ASEPTICplus	W B1SF55x84x8/11,5-FKM	00173649	1
506	Shim		DIN988 37x47x0,1-St	0010373X	X)
507	Shim		DIN988 37x47x0,3-St	00103977	X)
508	Shim		DIN988 37x47x0,5-St	00123404	X)
515	Shim		DIN988 25x35x0,1-St	00103691	X)
516	Shim		DIN988 25x35x0,3-St	00103934	X)
517	Shim		DIN988 25x35x0,5-St	00104167	X)
521	Shim		W4140 75x90x0,1-St	00120545	X)

X) if required
When ordering spare parts always quote nameplate data with serial number and designation with part number!
Mount-on gear units have motors, variable speed gear units or special input shaft assemblies mounted on the drive end. For parts see appropriate parts list.

Copyright reserved! All rights reserved according to DIN ISO 16016.

No.	Description	Additional specifications	SEW standard label	Part No.	Qty.
521	Shim	Reinforced bearings; FHF57 in reduced backlash design	W4140 80x90x0,1-St	00123935	X)
522	Shim		W4140 75x90x0,3-St	00120553	X)
522	Shim	Reinforced bearings; FHF57 in reduced backlash design	W4140 80x90x0,3-St	00123943	X)
523	Shim		W4140 75x90x0,5-St	00120561	X)
523	Shim	Reinforced bearings; FHF57 in reduced backlash design	W4140 80x90x0,5-St	00123951	X)
695	Spacer tube	FHF57; Only for rust-proof hollow shaft with standard bearing	Ø56xØ63x5,3 mm	00470406	1
990	Contact corrosion inhibitor			09107819	1

X) if required
When ordering spare parts always quote nameplate data with serial number and designation with part number!
Mount-on gear units have motors, variable speed gear units or special input shaft assemblies mounted on the drive end. For parts see appropriate parts list.

Copyright reserved! All rights reserved according to DIN ISO 16016.

9 Lubricants

General information

Unless a special arrangement is made, SEW-EURODRIVE supplies the drives with a lubricant fill adapted for the specific gear unit and mounting position. The decisive factor is the mounting position (M1 ... M6, → Sec. "Mounting Positions and Important Order Information") specified when ordering the drive. You must adapt the lubricant fill to any subsequent changes made to the mounting position (→ Lubricant fill quantities).

9.1 Lubricant table

The lubricant table on the following page shows the permitted lubricants for SEW-EURODRIVE gear units. Please note the following key to the lubricant table.

Key to the lubricant table

Abbreviations used, meaning of shading and notes:

CLP	= Mineral oil
CLP PG	= Polyglycol (W gear units, conforms to USDA-H1)
CLP HC	= Synthetic hydrocarbons
E	= Ester oil (water pollution danger category WGK 1)
HCE	= Synthetic hydrocarbons + ester oil (USDA-H1 certification)
HLP	= Hydraulic oil
	= Synthetic lubricant (= synthetic anti-friction bearing grease)
	= Mineral lubricant (= mineral-based anti-friction bearing grease)
1)	Helical-worm gear units with PG oil: Please contact SEW
2)	Special lubricant for Spiroplan® gear units only
3)	Recommendation: Select SEW $f_B \geq 1.2$
4)	Pay attention to critical starting behavior at low temperatures!
5)	Low-viscosity grease
6)	Ambient temperature
	Lubricant for the food industry (food grade oil)
	Biodegradable oil (lubricant for use in agriculture, forestry and water resources)

Anti-friction bearing greases

The anti-friction bearings in gear units and motors are given a factory-fill with the greases listed below. SEW-EURODRIVE recommends regreasing anti-friction bearings with a grease fill at the same time as changing the oil.

	Ambient temperature	Manufacturer	Type
Anti-friction bearing in gear unit	-20 °C ... +60 °C	Mobil	Mobilux EP 2
	-40 °C ... +80 °C	Mobil	Mobiltemp SHC 100
Anti-friction bearing in motor	-20 °C ... +80 °C	Esso	Unirex EQ3
	-20 °C ... +60 °C	Shell	Alvania RL3
	+80 °C ... +100 °C	Klüber	Barrierta L55/2
	-45 °C ... -25 °C	Shell	Aero Shell Grease 16
Special greases for anti-friction bearings in gear units:			
	-30 °C ... +40 °C	Aral	Eural Grease EP 2
	-20 °C ... +40 °C	Aral	Aralube BAB EP2

The following grease quantities are required:

- For fast-running bearings (motor and gear unit input end): Fill the cavities between the rolling elements one third full with grease.
- For slow-running bearings (in gear units and at gear unit output end): Fill the cavities between the rolling elements two thirds full with grease.

Lubricant table

01 805 892

	6) °C -50 0 +50 +100	DIN (ISO)	ISO,NLGI	Mobil®	Shell		Aral	BP	Tribol	TEXACO		FUCHS
R...	Standard -10 +40	CLP(CC)	VG 220	Mobilgear 630	Shell Omala 220	Klüberoil GEM 1-220	Aral Degol BG 220	BP Energol GR-XP 220	Tribol 1100/220	Meropa 220	Optigear BM 220	Renolin CLP 220
K...(HK...)	-25 +80	CLP PG	VG 220	Mobil Glygoyle 30	Shell Tivela S 220	Klübersynth GH 6-220	Aral Degol GS 220	BP Enersyn SG-XP 220	Tribol 800/220	Synlube CLP 220	Optiflex A 220	
	4) -40 +80	CLP HC	VG 220	Mobil SHC 630	Shell Omala HD 220	Klübersynth EG 4-220	Aral Degol PAS 220		Tribol 1510/220	Pinnacle EP 220	Optigear Synthetic A 220	Renolin Unisyn CLP 220
	4) -40 +40		VG 150	Mobil SHC 629	Shell Omala HD 150	Klübersynth EG 4-150				Pinnacle EP 150		
F...	-20 +25	CLP (CC)	VG 150 VG 100	Mobilgear 627	Shell Omala 100	Klüberoil GEM 1-150	Aral Degol BG 100	BP Energol GR-XP 100	Tribol 1100/100	Meropa 150	Optigear BM 100	Renolin CLP 150
	-30 +10	HLP (HM)	VG 68-46 VG 32	Mobil D.TE. 13M	Shell Tellus T 32	Klüberoil GEM 1-68	Aral Degol BG 46		Tribol 1100/68	Rando EP Ashless 46	Optigear 32	Renolin B 46 HVI
	4) -40 +10	CLP HC	VG 32	Mobil SHC 624		Klüber-Summit HySyn FG-32				Cetus PAO 46		
	4) -40 -20	HLP (HM)	VG 22 VG 15	Mobil D.T.E. 11M	Shell Tellus T 15	Isoflex MT 30 ROT		BP Energol HLP-HM 15		Rando HDZ 15		
S...(HS...)	Standard 0 +40	CLP (CC)	VG 680	Mobilgear 636	Shell Omala 680	Klüberoil GEM 1-680	Aral Degol BG 680	BP Energol GR-XP 680	Tribol 1100/680	Meropa 680	Optigear BM 680	Renolin CLP 680
	-20 +60	CLP PG	VG 680 1)		Shell Tivela S 680	Klübersynth GH 6-680		BP Enersyn SG-XP 680	Tribol 800/680	Synlube CLP 680		
	4) -30 +80	CLP HC	VG 460	Mobil SHC 634	Shell Omala HD 460	Klübersynth EG 4-460				Pinnacle EP 460		
	4) -40 +10		VG 150	Mobil SHC 629	Shell Omala HD 150	Klübersynth EG 4-150				Pinnacle EP 150		
	-20 +10	CLP (CC)	VG 150 VG 100	Mobilgear 627	Shell Omala 100	Klüberoil GEM 1-150	Aral Degol BG 100	BP Energol GR-XP 100	Tribol 1100/100	Meropa 100	Optigear BM 100	Renolin CLP 150
	-25 +20	CLP PG	VG 220 1)	Mobil Glygoyle 30	Shell Tivela S 220	Klübersynth GH 6-220			Tribol 800/220	Synlube CLP 220	Optiflex A 220	
	4) -40 0	CLP HC	VG 32	Mobil SHC 624		Klüber-Summit HySyn FG-32				Cetus PAO 46		
R...,K...(HK...), F...,S...(HS...)	4) -30 +40	HCE	VG 460		Shell Cassida Fluid GL 460	Klüberoil 4UH1-460 N	Aral Eural Gear 460				Optileb GT 460	
	-20 +40	E	VG 460			Klüberbio CA2-460	Aral Degol BAB 460				Optisynt BS 460	
W...(HW...)	Standard -20 +40	SEW PG	VG 460 2)			Klüber SEW HT-460-5						
	4) -40 +10	API GL5	SAE 75W90 (~VG 100)	Mobilube SHC 75 W90-LS								
	-20 +40	CLP PG	VG 460 3)			Klübersynth UH1 6-460						
R32 R302	-25 +60	DIN 51 818 5)	00	Glygoyle Grease 00	Shell Tivela GL 00	Klübersynth GE 46-1200				Multifak 6833 EP 00		
	Standard -15 +40		000 - 0	Mobilux EP 004	Shell Alvania GL 00		Aralub MFL 00	BP Energrease LS-EP 00		Multifak EP 000	Longtime PD 00	Renolin SF 7 - 041

9.2 Lubricant fill quantities

The specified fill quantities are **recommended values**. The precise values vary depending on the number of stages and gear ratio. When filling, it is essential to check the **oil level plug since it indicates the precise oil capacity**.

The following tables show guide values for lubricant fill quantities in relation to the mounting position M1 ... M6.

Helical (R) gear units

Gear unit type R.., R..F	Fill quantity in liters					
	M1[1)]	M2[1)]	M3	M4	M5	M6
R07/R07F	0.12	0.20	0.20	0.20	0.20	0.20
R17/R17F	0.25	0.55	0.35	0.55	0.35	0.35
R27/R27F	0.25/0.40	0.70	0.50	0.70	0.50	0.50
R37/R37F	0.30/0.95	0.85	0.95	1.05	0.75	0.95
R47/R47F	0.70/1.50	1.60	1.50	1.65	1.50	1.50
R57/R57F	0.80/1.70	1.90	1.70	2.10	1.70	1.70
R67/R67F	1.10/2.30	2.60/3.50	2.80	3.20	1.80	2.00
R77/R77F	1.20/3.00	3.80/4.10	3.60	4.10	2.50	3.40
R87/R87F	2.30/6.0	6.7/8.2	7.2	7.7	6.3	6.5
R97	4.60/9.8	11.7/14.0	11.7	13.4	11.3	11.7
R107	6.0/13.7	16.3	16.9	19.2	13.2	15.9
R137	10.0/25.0	28.0	29.5	31.5	25.0	25.0
R147	15.4/40.0	46.5	48.0	52.0	39.5	41.0
R167	27.0/70.0	82.0	78.0	88.0	66.0	69.0
Gear unit type RF.. / RM..	**Fill quantity in liters**					
	M1[1)]	**M2[1)]**	**M3**	**M4**	**M5**	**M6**
RF07	0.12	0.20	0.20	0.20	0.20	0.20
RF17	0.25	0.55	0.35	0.55	0.35	0.35
RF27	0.25/0.40	0.70	0.50	0.70	0.50	0.50
RF37	0.35/0.95	0.90	0.95	1.05	0.75	0.95
RF47	0.65/1.50	1.60	1.50	1.65	1.50	1.50
RF/RM57	0.80/1.70	1.80	1.70	2.00	1.70	1.70
RF/RM67	1.20/2.50	2.70/3.60	2.70	2.60	1.90	2.10
RF/RM77	1.20/2.60	3.80/4.10	3.30	4.10	2.40	3.00
RF/RM87	2.40/6.0	6.8/7.9	7.1	7.7	6.3	6.4
RF/RM97	5.1/10.2	11.9/14.0	11.2	14.0	11.2	11.8
RF/RM107	6.3/14.9	15.9	17.0	19.2	13.1	15.9
RF/RM137	9.5/25.0	27.0	29.0	32.5	25.0	25.0
RF/RM147	16.4/42.0	47.0	48.0	52.0	42.0	42.0
RF/RM167	26.0/70.0	82.0	78.0	88.0	65.0	71.0

1) The output end gear unit of multi-stage gear units must be filled with the larger oil volume.

Helical (RX) gear units

Gear unit type RX..	Fill quantity in liters					
	M1	M2	M3	M4	M5	M6
RX57	0.60	0.80	1.30	1.30	0.90	0.90
RX67	0.80	0.80	1.70	1.90	1.10	1.10
RX77	1.10	1.50	2.60	2.70	1.60	1.60
RX87	1.70	2.50	4.80	4.80	2.90	2.90
RX97	2.10	3.40	7.4	7.0	4.80	4.80
RX107	3.90	5.6	11.6	11.9	7.7	7.7
Gear unit type RXF..	**Fill quantity in liters**					
	M1	**M2**	**M3**	**M4**	**M5**	**M6**
RXF57	0.50	0.80	1.10	1.10	0.70	0.70
RXF67	0.70	0.80	1.50	1.40	1.00	1.00
RXF77	0.90	1.30	2.40	2.00	1.60	1.60
RXF87	1.60	1.95	4.90	3.95	2.90	2.90
RXF97	2.10	3.70	7.1	6.3	4.80	4.80
RXF107	3.10	5.7	11.2	9.3	7.2	7.2

Parallel shaft helical (F) gear units

F.., FA..B, FH..B, FV..B:

Gear unit type	Fill quantity in liters					
	M1	M2	M3	M4	M5	M6
F..27	0.60	0.80	0.65	0.70	0.60	0.60
F..37	0.95	1.25	0.70	1.25	1.00	1.10
F..47	1.50	1.80	1.10	1.90	1.50	1.70
F..57	2.60	3.50	2.10	3.50	2.80	2.90
F..67	2.70	3.80	1.90	3.80	2.90	3.20
F..77	5.9	7.3	4.30	8.0	6.0	6.3
F..87	10.8	13.0	7.7	13.8	10.8	11.0
F..97	18.5	22.5	12.6	25.2	18.5	20.0
F..107	24.5	32.0	19.5	37.5	27.0	27.0
F..127	40.5	54.5	34.0	61.0	46.3	47.0
F..157	69.0	104.0	63.0	105.0	86.0	78.0

FF..:

Gear unit type	Fill quantity in liters					
	M1	M2	M3	M4	M5	M6
FF27	0.60	0.80	0.65	0.70	0.60	0.60
FF37	1.00	1.25	0.70	1.30	1.00	1.10
FF47	1.60	1.85	1.10	1.90	1.50	1.70
FF57	2.80	3.50	2.10	3.70	2.90	3.00
FF67	2.70	3.80	1.90	3.80	2.90	3.20
FF77	5.9	7.3	4.30	8.1	6.0	6.3
FF87	10.8	13.2	7.8	14.1	11.0	11.2
FF97	19.0	22.5	12.6	25.6	18.9	20.5
FF107	25.5	32.0	19.5	38.5	27.5	28.0
FF127	41.5	55.5	34.0	63.0	46.3	49.0
FF157	72.0	105.0	64.0	106.0	87.0	79.0

FA.., FH.., FV.., FAF.., FHF.., FVF.., FAZ.., FHZ.., FVZ..:

Gear unit type	Fill quantity in liters					
	M1	M2	M3	M4	M5	M6
F..27	0.60	0.80	0.65	0.70	0.60	0.60
F..37	0.95	1.25	0.70	1.25	1.00	1.10
F..47	1.50	1.80	1.10	1.90	1.50	1.70
F..57	2.70	3.50	2.10	3.40	2.90	3.00
F..67	2.70	3.80	1.90	3.80	2.90	3.20
F..77	5.9	7.3	4.30	8.0	6.0	6.3
F..87	10.8	13.0	7.7	13.8	10.8	11.0
F..97	18.5	22.5	12.6	25.2	18.5	20.0
F..107	24.5	32.0	19.5	37.5	27.0	27.0
F..127	39.0	54.5	34.0	61.0	45.0	46.5
F..157	68.0	103.0	62.0	104.0	85.0	77.0

Helical-bevel (K) gear units

K.., KA..B, KH..B, KV..B:

Gear unit type	Fill quantity in liters					
	M1	M2	M3	M4	M5	M6
K..37	0.50	1.00	1.00	1.25	0.95	0.95
K..47	0.80	1.30	1.50	2.00	1.60	1.60
K..57	1.20	2.30	2.50	2.80	2.60	2.40
K..67	1.10	2.40	2.60	3.45	2.60	2.60
K..77	2.20	4.10	4.40	5.8	4.20	4.40
K..87	3.70	8.0	8.7	10.9	8.0	8.0
K..97	7.0	14.0	15.7	20.0	15.7	15.5
K..107	10.0	21.0	25.5	33.5	24.0	24.0
K..127	21.0	41.5	44.0	54.0	40.0	41.0
K..157	31.0	62.0	65.0	90.0	58.0	62.0
K..167	33.0	95.0	105.0	123.0	85.0	84.0
K..187	53.0	152.0	167.0	200	143.0	143.0

KF..:

Gear unit type	Fill quantity in liters					
	M1	M2	M3	M4	M5	M6
KF37	0.50	1.10	1.10	1.50	1.00	1.00
KF47	0.80	1.30	1.70	2.20	1.60	1.60
KF57	1.30	2.30	2.70	3.15	2.90	2.70
KF67	1.10	2.40	2.80	3.70	2.70	2.70
KF77	2.10	4.10	4.40	5.9	4.50	4.50
KF87	3.70	8.2	9.0	11.9	8.4	8.4
KF97	7.0	14.7	17.3	21.5	15.7	16.5
KF107	10.0	21.8	25.8	35.1	25.2	25.2
KF127	21.0	41.5	46.0	55.0	41.0	41.0
KF157	31.0	66.0	69.0	92.0	62.0	62.0

KA.., KH.., KV.., KAF.., KHF.., KVF.., KAZ.., KHZ.., KVZ..:

Gear unit type	Fill quantity in liters					
	M1	M2	M3	M4	M5	M6
K..37	0.50	1.00	1.00	1.40	1.00	1.00
K..47	0.80	1.30	1.60	2.15	1.60	1.60
K..57	1.30	2.30	2.70	3.15	2.90	2.70
K..67	1.10	2.40	2.70	3.70	2.60	2.60
K..77	2.10	4.10	4.60	5.9	4.40	4.40
K..87	3.70	8.2	8.8	11.1	8.0	8.0
K..97	7.0	14.7	15.7	20.0	15.7	15.7
K..107	10.0	20.5	24.0	32.4	24.0	24.0
K..127	21.0	41.5	43.0	52.0	40.0	40.0
K..157	31.0	66.0	67.0	87.0	62.0	62.0
KH167	33.0	95.0	105.0	123.0	85.0	84.0
KH187	53.0	152.0	167.0	200	143.0	143.0

Spiroplan® (W) gear units

The fill quantity of Spiroplan® gear units does not vary, irrespective of their mounting position:

Gear unit type	Fill quantity in liters, regardless of mounting position
W..10	0.16
W..20	0.26
W..30	0.50

Helical-worm (S) gear units

S..:

Gear unit type	Fill quantity in liters					
	M1	M2	M3[1)]	M4	M5	M6
S37	0.25	0.40	0.50	0.55	0.40	0.40
S47	0.35	0.80	0.70/0.90	1.00	0.80	0.80
S57	.50	1.20	1.00/1.20	1.45	1.30	1.30
S67	1.00	2.00	2.20/3.10	3.10	2.60	2.60
S77	1.90	4.20	3.70/5.4	5.9	4.40	4.40
S87	3.30	8.1	6.9/10.4	11.3	8.4	8.4
S97	6.8	15.0	13.4/18.0	21.8	17.0	17.0

1) The larger gear unit of multi-stage gear units must be filled with the larger oil volume.

SF..:

Gear unit type	Fill quantity in liters					
	M1	M2	M3[1)]	M4	M5	M6
SF37	0.25	0.40	0.50	0.55	0.40	0.40
SF47	0.40	0.90	0.90/1.05	1.05	1.00	1.00
SF57	0.50	1.20	1.00/1.50	1.55	1.40	1.40
SF67	1.00	2.20	2.30/3.00	3.20	2.70	2.70
SF77	1.90	4.10	3.90/5.8	6.5	4.90	4.90
SF87	3.80	8.0	7.1/10.1	12.0	9.1	9.1
SF97	7.4	15.0	13.8/18.8	22.6	18.0	18.0

1) The larger gear unit of multi-stage gear units must be filled with the larger oil volume.

SA.., SH.., SAF.., SHF.., SAZ.., SHZ..:

Gear unit type	Fill quantity in liters					
	M1	M2	M3[1)]	M4	M5	M6
S..37	0.25	0.40	0.50	0.50	0.40	0.40
S..47	0.40	0.80	0.70/0.90	1.00	0.80	0.80
S..57	0.50	1.10	1.00/1.50	1.50	1.20	1.20
S..67	1.00	2.00	1.80/2.60	2.90	2.50	2.50
S..77	1.80	3.90	3.60/5.0	5.8	4.50	4.50
S..87	3.80	7.4	6.0/8.7	10.8	8.0	8.0
S..97	7.0	14.0	11.4/16.0	20.5	15.7	15.7

1) The larger gear unit of multi-stage gear units must be filled with the larger oil volume.

Each gear unit is supplied from the factory with the correct grade and quantity of lubricant for the specified mounting position. The following lubricants are supplied from our North American Facilities. Under special circumstances such as high or low ambient temperatures optional oils should be used.

Standard Oil

USA			
Gear Units	**Type**	**Manufacturer**	**Ambient Temperature °C**
S..37 - 97	Mobilgear 636 [M]	Mobil Oil Corp.	0 to +40
CANADA			
S..47 - 97	Omala 680 [M]	Shell Oil Co.	0 to +40
S..37 - 97	Tribol 800/680 [S]	Tribol	0 to +60

[M] Mineral Oil
[S] Synthetic Oil

Optional Oil

USA			
Gear Units	**Type**	**Manufacturer**	**Ambient Temperature °C**
S..47 - 97	Mobilgear 630 [M]	Mobil Oil Corp.	-15 to +25
S..37 - 97	Mobil SHC634 [S]		-25 to +60
CANADA			
S..47 - 97	Omala 200 [M]	Shell Oil Co.	-15 to +25
S..37 - 97	Tivela SD460 [S]	Shell Oil Co.	-25 to +10

[M] Mineral Oil
[S] Synthetic Oil

For ball and roller bearings of gear units the following greases are recommended:

Mineral Grease

Type	Manufacturer	Ambient Temperature °C
Mobilux EP2	Mobil Oil Corp.	-20 to +40
Alvania Grease R3	Shell Oil Co.	-30 to +60

Synthetic Grease

Type	Manufacturer	Ambient Temperature °C
Mobiltemp SHC 32	Mobil Oil Corp.	-45 to +60

The approximate lubricant in US **gallons and liters** per mounting position is as follows:

Gear Unit	Mounting Position											
	M1		M2		M3 [1]		M4		M5		M6	
	Gallons	Liters	Gallons	Liters	Gallons	Liters	Gallons	Liters	Gallons	Liters	Gallons	Liters
S37	0.07	0.25	0.11	0.4	0.13	0.5	0.16	0.6	0.11	0.4	0.11	0.4
S47	0.09	0.35	0.21	0.8	0.18 (0.24)	0.7 (0.9)	0.29	1.1	0.21	0.8	0.21	0.8
S57	0.13	0.5	0.32	1.2	0.26 (0.32)	1 (1.2)	0.40	1.5	0.34	1.3	0.34	1.3
S67	0.26	1	0.53	2	0.58 (0.82)	2.2 (3.1)	0.85	3.2	0.69	2.6	0.69	2.6
S77	0.50	1.9	1.11	4.2	0.98 (1.43)	3.7 (5.4)	1.59	6	1.16	4.4	1.16	4.4
S87	0.87	3.3	2.14	8.1	1.82 (2.75)	6.9 (10.4)	3.17	12	2.22	8.4	2.22	8.4
S97	1.80	6.8	3.96	15	3.54 (4.76)	13.4 (18)	5.94	22.5	4.49	17	4.49	17
SF37	0.07	0.25	0.11	0.4	0.13	0.5	0.16	0.6	0.11	0.4	0.11	0.4
SF47	0.11	0.4	0.24	0.9	0.24 (0.29)	0.9 (1.1)	0.32	1.2	0.26	1	0.26	1
SF57	0.13	0.5	0.32	1.2	0.26 (0.40)	1 (1.5)	0.42	1.6	0.37	1.4	0.37	1.4
SF67	0.26	1	0.58	2.2	0.61 (0.79)	2.3 (3)	0.85	3.2	0.71	2.7	0.71	2.7
SF77	0.50	1.9	1.08	4.1	1.03 (1.53)	3.9 (5.8)	1.72	6.5	1.29	4.9	1.29	4.9
SF87	1.00	3.8	2.11	8	1.88 (2.67)	7.1 (10.1)	3.17	12	2.40	9.1	2.40	9.1
SF97	1.96	7.4	3.96	15	3.65 (4.97)	13.8 (18.8)	6.24	23.6	4.76	18	4.76	18
SA/SH37 SAF/SHF37 SAZ/SHZ37	0.07	0.25	0.11	0.4	0.13	0.5	0.16	0.6	0.11	0.4	0.11	0.4
SA/SH47 SAF/SHF47 SAZ/SHZ47	0.11	0.4	0.21	0.8	0.18 (0.24)	0.7 (0.9)	0.29 [2]	1.1 [2]	0.21	0.8	0.21	0.8
SA/SH57 SAF/SHF57 SAZ/SHZ57	0.13	0.5	0.29	1.1	0.26 (0.40)	1 (1.5)	0.42	1.6	0.32	1.2	0.32	1.2
SA/SH67 SAF/SHF67 SAZ/SHZ67	0.26	1	0.53	2	0.48 (0.69)	1.8 (2.6)	0.77	2.9	0.66	2.5	0.66	2.5
SA/SH77 SAF/SHF77 SAZ/SHZ77	0.48	1.8	1.03	3.9	0.95 (1.32)	3.6 (5)	1.56	5.9	1.19	4.5	1.19	4.5
SA/SH87 SAF/SHF87 SAZ/SHZ87	1.00	3.8	1.96	7.4	1.59 (2.30)	6 (8.7)	2.96	11.2	2.11	8	2.11	8
SA/SH97 SAF/SHF97 SAZ/SHZ97	1.85	7	3.70	14	3.01 (4.23)	11.4 (16)	5.55	21	4.15	15.7	4.15	15.7

[1] On compound gear units the primary (larger) gear unit is provided with the oil quantity in parenthesis.

[2] When combined with a 2-pole motor at M4 mounting position, the oil quantity must be reduced to 0.28 gallons (1.05 liters).

For compound drives the R reducer requires its own oil filling as shown in the chart:

Gear Unit	Mounting Position					
	M1/M3/M5/M6		M2		M4	
	Gallons	Liters	Gallons	Liters	Gallons	Liters
R17	0.07	0.25	0.16	0.6	0.16	0.6
R37	0.11	0.4	0.24	0.9	0.29	1.1
R57	0.21	0.8	0.48	1.8	0.53	2

SEW EURODRIVE

Parts List

AC motor
DR.71S+M/FG/FM/2W/C/AL/LN/Z
Gear unit version

08 114 07 05

SEW EURODRIVE

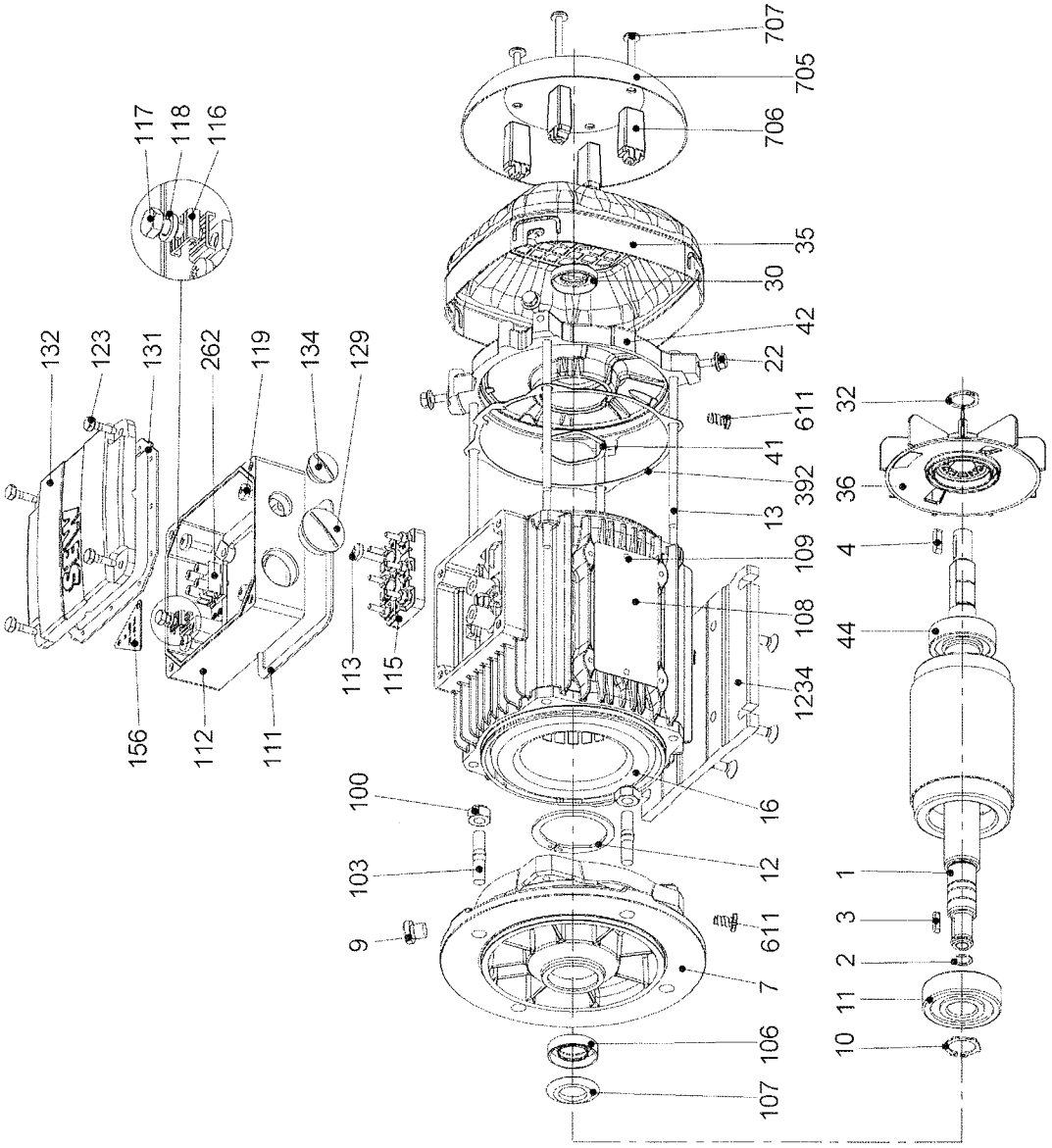

a) not necessary with W20/W30/R07/R17
b) not necessary with W20/W30
Refer to spare parts list for parts of the bed plate kit 08832__10
When ordering spare parts always quote nameplate data with serial number and designation with part number!

Copyright reserved! All rights reserved according to DIN ISO 16016.

Parts List

08 114 07 05

AC motor
DR.71S+M/FG/FM/2W/C/AL/LN/Z
Gear unit version

No.	Description	Additional specifications	SEW standard label	Part No.	Qty.
1	Rotor			*	1
2	Snap ring	for pinion shaft end 10 b)	W4173 SW10x1-FS	00115193	1
2	Snap ring	for pinion shaft end 12 b)	W4173 SW11x1-FS	00115207	1
3	Key	for pinion shaft end 10	DIN6885-1 A2x2x12 +C	00100005	1
3	Key	for pinion shaft end 12	DIN6885-1 A3x3x14 +C	00100692	1
4	Key	2W	DIN6885-1 A4x4x16 +C	00135232	1
7	Flange	AL; a)	FG100 D120	01844768	1
7	Flange	GG; a)	FG100 D120	13613014	1
7	Flange	AL; a)	FG130 D160	01844784	1
7	Flange	GG; a)	FG130 D160	13613030	1
7	Flange	a)	FG165 D200	13615106	1
7	Flange	a)	FG215 D250	13612662	1
7	Flange	a)	FG265 D300	13615122	1
9	Screw plug	for flange FG100, FG130 a)	W4085 M10x1-St-ADC3K	0011426X	1
9	Screw plug	for flange FG165, FG215 a)	W4085 M12x1,5-St-ADC3K	00114308	1
9	Screw plug	for flange FG265 a)	W4085 M22x1,5-St-ADC3K	00114316	1
10	Circlip	a)	DIN983 17x1-FS	0011460X	1
11	Deep groove ball bearing	a)	6303-2Z-C3-K08	13236563	1
12	Circlip	a)	DIN472 47x1,75-FS	00103187	1
13	Machine screw	DR.71S	W4018 M5x131-6.8-ADB3	13237160	4
13	Machine screw	DR.71M	W4018 M5x156-6.8-ADB3	13237179	4
16	Stator			*	1
22	Hex head screw		EN1665 M5x10-8.8-A2F	13237616	4
30	Oil seal	with Item no. 998	W BAOFSF16x28x6/7-NBR	13262041	1
30	Oil seal	with Item no. 998; for 2-pole version	W BAOFSF16x28x6/7-FKM	13262351	1
32	Circlip		DIN471 15x1-FS	00102679	1
35	Fan Guard			13610503	1
35	Fan Guard	2W		13614487	1
35	Fan Guard	LN		13611690	1
36	Fan		D=101	13611550	1
36	Aluminum fan	AL	D=112	13611968	1
36	High Inert.Flywheel	Z	J=0,00213 kgm²	13611593	1
41	Equalizing ring		W4253 33x39,1x0,5	00115894	1
42	B bearing end shield	AL		13626132	1
42	B bearing end shield	GG, only for Production in Brazil		13611615	1
44	Deep groove ball bearing		6203-2Z-C3-K08	13236601	1
100	Hexagon nut	for flange FG100 AL a)	EN1661 M6-8-A2F	19052677	4
100	Hexagon nut	for flange FG100 GG a)	ISO4032 M6-8-St-A2F	00101982	4
100	Hexagon nut	for flange FG130 AL a)	EN1661 M8-8-A2F	13309722	4
100	Hexagon nut	for flange FG130 GG a)	ISO4032 M8-8-St-A2F	00101990	4
100	Hexagon nut	for flange FG165 a)	ISO4032 M10-8-St-A2F	00102008	4
100	Hexagon nut	for flange FG215, FG265 a)	ISO4032 M12-8-St-A2F	00102016	4
103	Stud	for flange FG100 a)	DIN939 M6x18-8.8-A2F	00134074	4
103	Stud	for flange FG100 gear unit size 27, W37	W4061 M6x16-8.8-A2F	00131687	4
103	Stud	for flange FG130 a)	DIN939 M8x20-8.8-A2F	00100749	4
103	Stud	for flange FG130 gear unit size W47	DIN835 M8x20-8.8-A2F-MV	13262572	4
103	Stud	for flange FG165 a)	DIN939 M10x22-8.8-A2F	00118451	4
103	Stud	for flange FG215, FG265 a)	DIN939 M12x30-8.8-A2F	00100811	4
106	Oil seal	a)	W A17x30x7-NBR	00106062	1
106	Oil seal	a) for 2-pole version	W A17x30x7-FKM-FKO	13225820	1
107	Oel finger	a)	W4291 17-A2F	00116602	1
108	Nameplate			*	1
109	Grooved Pin		ISO8746 2x4-A-Niro	00107646	2

* order-dependently
a) not necessary with W20/W30/R07/R17
b) not necessary with W20/W30
Refer to spare parts list for parts of the bed plate kit 08832__10
When ordering spare parts always quote nameplate data with serial number and designation with part number!

Copyright reserved! All rights reserved according to DIN ISO 16016.

Parts List

08 114 07 05

AC motor
DR.71S+M/FG/FM/2W/C/AL/LN/Z
Gear unit version

No.	Description	Additional specifications	SEW standard label	Part No.	Qty.
111	Gasket for lower part			01355635	1
112	Terminal box lower part		1x M25x1,5 ; 1x M16x1,5	13610570	1
112	Terminal box lower part		2x NPT 1/2"-14	13612018	1
113	Screw	parts included in stator complete	W4041 CE-M5x16-TX-A2F-GM1	00130591	1
115	Terminal Block	parts included in stator complete	W4720 KTM4-4.08-AS-KB-	13226193	1
116	Terminal clip			00104426	2
117	Screw		W4041 DE-S-M5x16-A2F-GM1	13237136	1
118	Lock washer		W4146 5-A2F	00118206	1
119	Screw		W4041 CE-M5x16-TX-SZ-A2F-GM1	00130591	4
123	Screw		W4041 DE-S-M5x16-A2F-GM1	13237136	4
129	Screw plug		W4411 M25x1,5-PA6.6GF30-	00131385	1
129	Screw plug	for NPT thread 1/2"	W4411 M20x1,5-PA6.6GF30-	13256300	2
131	Gasket for cover			01355627	1
132	Terminal Box Cover			13611763	1
134	Screw plug		W4411 M16x1,5-PA6.6GF30-	00131334	1
156	Reference Plate	for TF version	W4499 - TF	01366815	1
262	Terminal clip	2 pole		01823183	1
392	Gasket			13740369	1
611	Drain hole plug	DH		13618865	*
705	Protection canopy	C		13611623	1
706	Distance support	C		13618598	4
707	Pan head screw	C	W4036 REMFORM 6,0x35-TX-VZ	13262599	4
998	Synthetic grease	for Item no. 30	Klüber Petamo GHY133N	04963458	X)
1234	Bed plate kit	DR.71S FM	H=71; AxB=112x90	17534488	1
1234	Bed plate kit	DR.71M FM	H=71; AxB=112x90	17534585	1
1234	Bed plate kit	DR.71M FM80M	H=80; AxB=125x100	17534682	1

* order-dependently
X) if required
a) not necessary with W20/W30/R07/R17
b) not necessary with W20/W30
Refer to spare parts list for parts of the bed plate kit 08832__10
When ordering spare parts always quote nameplate data with serial number and designation with part number!

Copyright reserved! All rights reserved according to DIN ISO 16016.

5.9 Notes regarding the connection of the motor

INFORMATION

It is essential to comply with the valid wiring diagram! Do not connect or start up the motor if this wiring diagram is missing. You can obtain the valid wiring diagrams free of charge from SEW-EURODRIVE.

INFORMATION

The terminal box must be free of foreign objects, dirt and humidity. Unused cable entry openings and the terminal box itself must be closed so they are dust and water-proof.

Observe the following points when connecting the motor:

- Check cable cross section
- Arrange terminal links correctly
- Properly tighten connections and protective earth
- Check that the connection cables are not cramped in order not to damage the insulation.
- Observe clearances, see chapter "Electrical connection"
- In the terminal box: Check winding connections and tighten them if necessary
- Perform the connection in accordance with the enclosed wiring diagram
- Avoid protruding wire ends
- Observe the specified direction of rotation

5.10 Connecting the motor via terminal block

5.10.1 According to wiring diagram R13

Arrangement of terminal links for ⅄ connection

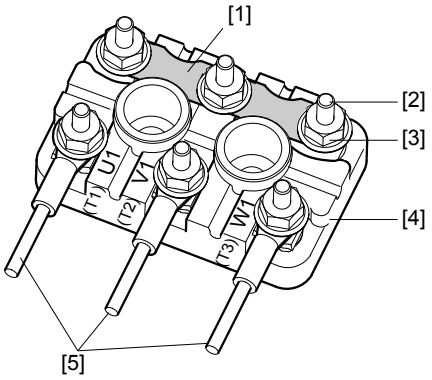

Arrangement of terminal links for △ connection

Motor size DR.71-DR.225:

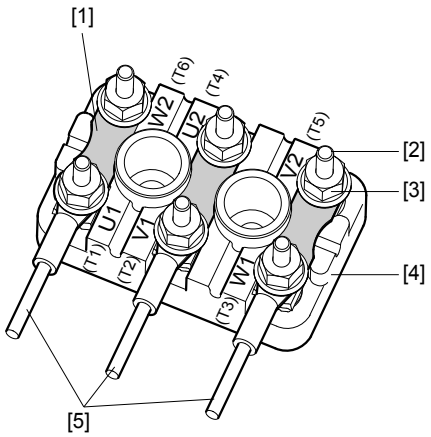

Motor size DR.315:

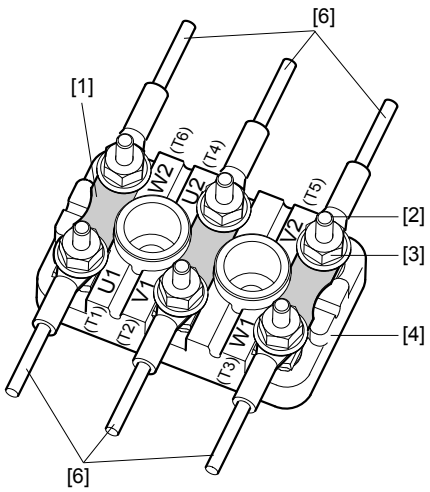

[1] Terminal link
[2] Terminal stud
[3] Flange nut
[4] Terminal board
[5] Customer connection
[6] Customer connection with split connection cable

5.10.2 According to wiring diagram R76

Arrangement of terminal links for ⅄ connection

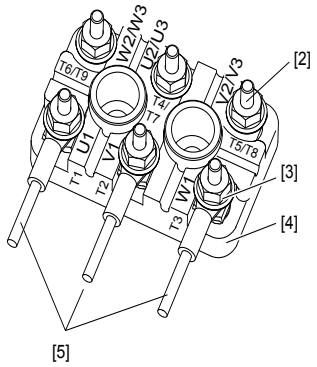

Arrangement of terminal links for ⅄⅄ connection

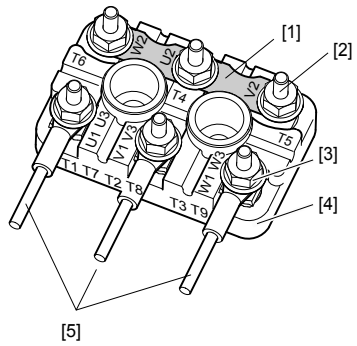

[1] Terminal link
[2] Terminal stud
[3] Flange nut
[4] Terminal board
[5] Customer connection

INFORMATION

Three winding lead ends must be rewired to change from high to low voltage:

The lines designated U3 (T7), V3 (T8) and W3 (T9) must be reconnected.

- U3 (T7) from U2 (T4) to U1 (T1)
- V3 (T8) from V2 (T5) to V1 (T2)
- W3 (T9) from W2 (T6) to W1 (T3)

Changing from low to high voltage is carried out in reverse order.

In both cases, the customer connection is made to U1 (T1), V1 (T2) and W1 (T3). You can change the direction of rotation by interchanging 2 supply cables.

5.10.3 According to wiring diagram R72

Arrangement of terminal links for △ connection

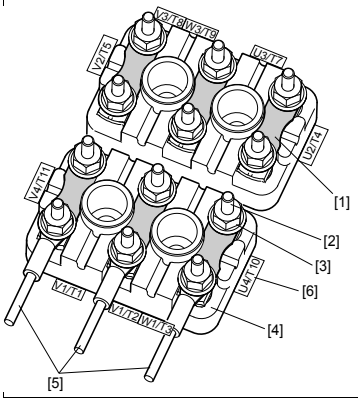

Arrangement of terminal links for △△ connection

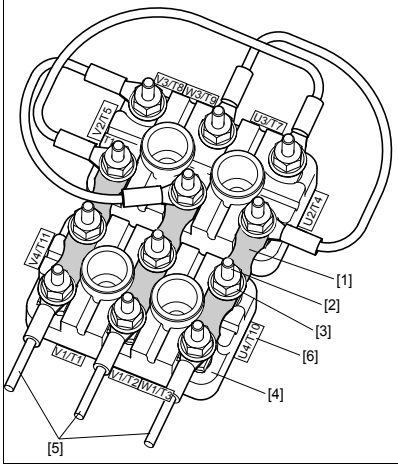

[1] Terminal link
[2] Terminal stud
[3] Flange nut
[4] Terminal board
[5] Customer connection
[6] Wiring designation plate

9 Appendix

9.1 *Wiring diagrams*

INFORMATION

The motor should be connected as shown in the connection wiring diagram or the assignment diagram, which are supplied with the motor. The following section only shows a selection of the common types of connections. You can obtain the relevant wiring diagrams free of charge from SEW-EURODRIVE.

9.1.1 Delta and star connection in wiring diagram R13

AC motor

For all motors with one speed, direct switching-on or ⅄/△ startup.

△ *connection*

The following figure shows △ connection for low voltage.

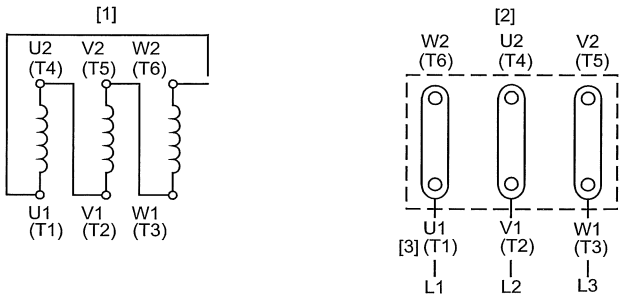

[1] Motor winding
[2] Motor terminal board
[3] Supply cables

⅄ *connection*

The following figure shows ⅄ connection for high voltage.

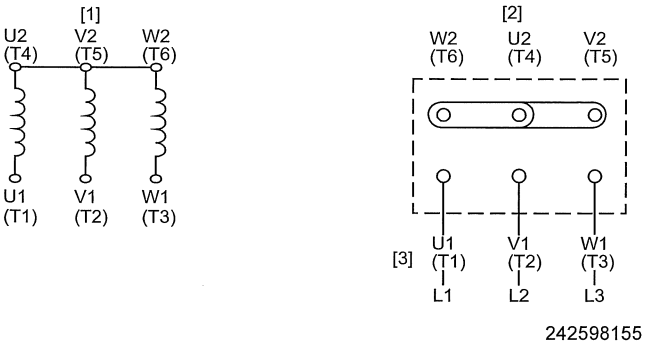

[1] Motor winding
[2] Motor terminal board
[3] Supply cables

Change in direction of rotation: Swap connection of 2 supply cables, L1 - L2

9.1.2 Delta connection in wiring diagram R72

AC motor

For all motors with one speed and direct switching-on.

△ *connection,*
△△ *connection*

The following figure shows △ connection for high voltages and △△ connection for low voltages.

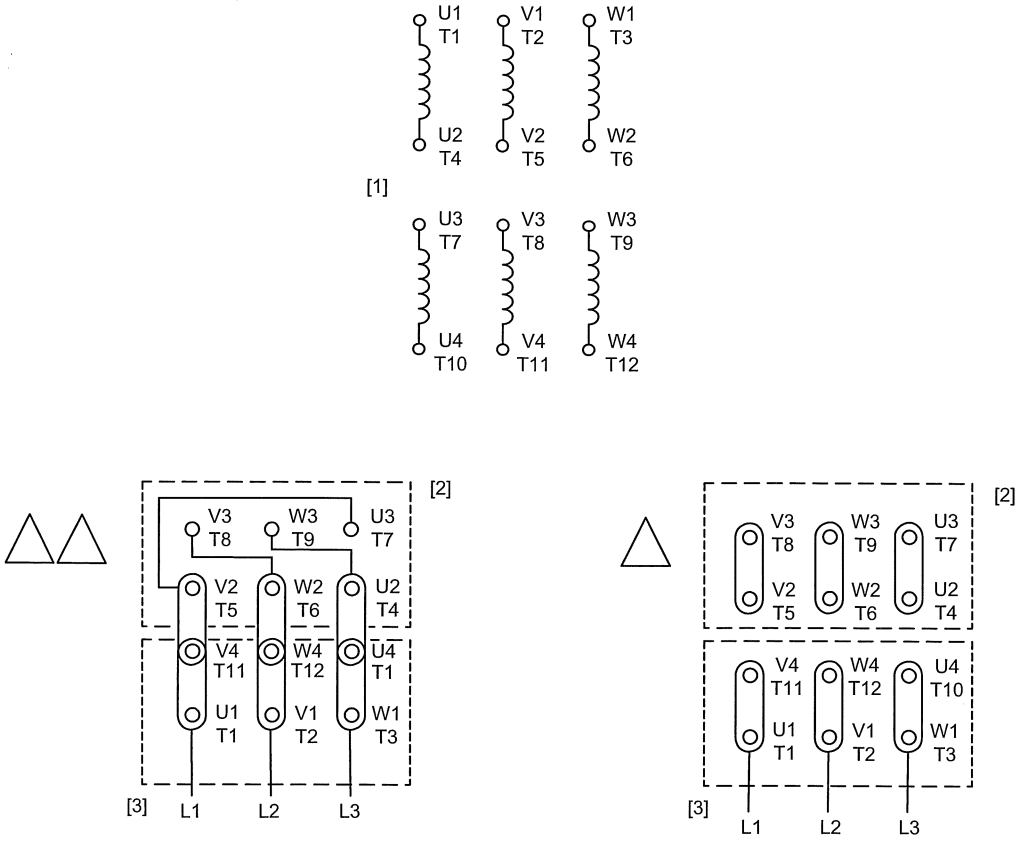

[1] Motor winding
[2] Motor terminal board
[3] Supply cables

Change in direction of rotation: Swap connection of 2 supply cables, L1 - L2

9.1.3 Star connection in wiring diagram R76

AC motor

For all motors with one speed and direct switching-on.

人 connection,
人人 connection

The following figure shows 人 connection for high voltages and 人人 connection for low voltages.

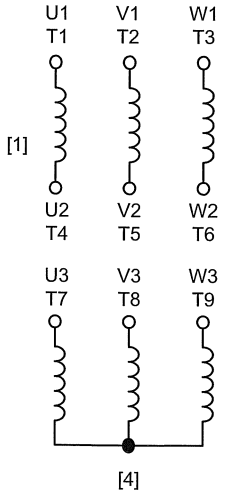

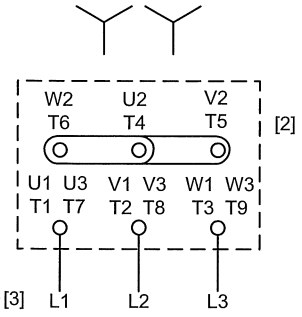

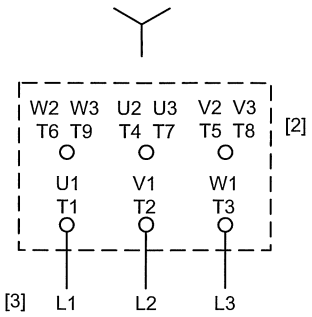

[1] Motor winding
[2] Motor terminal board
[3] Supply cables
[4] Star point connected in motor

Change in direction of rotation: Swap connection of 2 supply cables, L1 - L2

Features

- Wide range of pressure ratings, sizes, and resilient materials provide long service life and low internal leakage
- High Flow Valves for liquid, corrosive, and air/inert gas service
- Industrial applications include:
  - Car wash
  - Laundry equipment
  - Air compressors
  - Industrial water control
  - Pumps

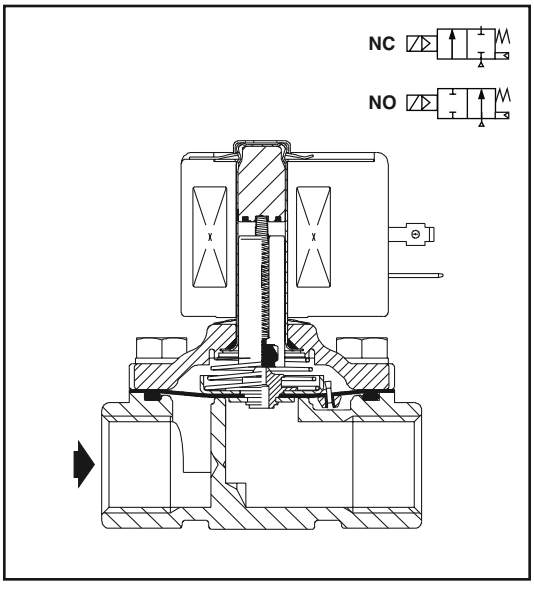

Construction

Valve Parts in Contact with Fluids		
Body	Brass	304 Stainless Steel
Seals and Discs	NBR or PTFE	
Disc-Holder	PA	
Core Tube	305 Stainless Steel	
Core and Plugnut	430F Stainless Steel	
Springs	302 Stainless Steel	
Shading Coil	Copper	Silver

Electrical

Standard Coil and Class of Insulation	Watt Rating and Power Consumption				Spare Coil Part Number			
		AC			General Purpose		Explosionproof	
	DC Watts	Watts	VA Holding	VA Inrush	AC	DC	AC	DC
F	-	6.1	16	40	238210	-	238214	-
F	11.6	10.1	25	70	238610	238710	238614	238714
F	16.8	16.1	35	180	272610	97617	272614	97617
F	-	17.1	40	93	238610	-	238614	-
F	-	20	43	240	99257	-	99257	-
F	-	20.1	48	240	272610	-	272614	-
H	30.6	-	-	-	-	74073	-	74073
H	40.6	-	-	-	-	238910	-	238914

Standard Voltages: 24, 120, 240, 480 volts AC, 60 Hz (or 110, 220 volts AC, 50 Hz). 6, 12, 24, 120, 240 volts DC. Must be specified when ordering.
Other voltages available when required.

Solenoid Enclosures

Standard: RedHat II - Watertight, Types 1, 2, 3, 3S, 4, and 4X; RedHat - Type I.

Optional: RedHat II - Explosionproof and Watertight, Types 3, 3S, 4, 4X, 6, 6P, 7, and 9; Red-Hat - Explosionproof and Watertight, Types 3, 4, 4X, 7, and 9.

(To order, add prefix "EF" to catalog number, except Catalog Numbers 8210B057, 8210B058, and 8210B059, which are not available with Explosionproof enclosures.)
See Optional Features Section for other available options.

Nominal Ambient Temp. Ranges

RedHat II/
RedHat AC: 32˚F to 125˚F (0˚C to 52˚C)

RedHat II DC: 32˚F to 104˚F (0˚C to 40˚C)
RedHat DC: 32˚F to 77˚F (0˚C to 25˚C)
(104˚F/40˚C occasionally)

Refer to Engineering Section for details.

Approvals

CSA certified. RedHat II meets applicable CE directives.
Refer to Engineering Section for details.

2/2 SERIES 8210

ASCO®

Specifications (English units)

Pipe Size (ins.)	Orifice Size (ins.)	Cv Flow Factor	Operating Pressure Differential (psi)							Max. Fluid Temp. ˚F		Brass Body			Stainless Steel Body			Watt Rating/ Class of Coil Insulation ⑦	
				Max. AC			Max. DC												
			Min.	Air-Inert Gas	Water	Light Oil @ 300 SSU	Air-Inert Gas	Water	Light Oil @ 300 SSU	AC	DC	Catalog Number	Const. Ref. ④	UL ⑤ Listing	Catalog Number	Const. Ref. ④	UL ⑤ Listing	AC	DC
NORMALLY CLOSED (Closed when de-energized), NBR or PTFE ② Seating																			
3/8	3/8	1.5	①	150	125	-	40	40	-	180	150	8210G073 ③	1P	●	8210G036 ③	1P	●	6.1/F	11.6/F
3/8	5/8	3	0	150	150	-	40	40	-	180	150	8210G093	5D	❍	-	-	-	10.1/F	11.6/F
3/8	5/8	3	5	200	150	135	125	100	100	180	150	8210G001	6D	❍	-	-	-	6.1/F	11.6/F
3/8	5/8	3	5	300	300	300	-	-	-	175	-	8210G006	5D	❍	-	-	-	17.1/F	-
1/2	7/16	2.2	①	150	125	-	40	40	-	180	150	8210G015 ③	2P	●	8210G037 ③	2P	●	6.1/F	11.6/F
1/2	5/8	4	0	150	150	-	40	40	-	180	150	8210G094	5D	❍	-	-	-	10.1/F	11.6/F
1/2	5/8	4	0	150	150	125	40	40	-	175	150	-	-	-	8210G087	7D	●	17.1/F	11.6/F
1/2	5/8	4	5	200	150	135	125	100	100	180	150	8210G002	6D	❍	-	-	-	6.1/F	11.6/F
1/2	5/8	4	5	300	300	300	-	-	-	175	-	8210G007	5D	❍	-	-	-	17.1/F	-
1/2	3/4	4	5	-	300	-	-	300	-	180	125	8210G227	5D	❍	-	-	-	17.1/F	40.6/H
3/4	5/8	4.5	0	150	150	125	40	40	-	175	150	-	-	-	8210G088	7D	●	17.1/F	11.6/F
3/4	3/4	5	5	125	125	125	100	90	75	180	150	8210G009	9D	❍	-	-	-	6.1/F	11.6/F
3/4	3/4	5	0	150	150	-	40	40	-	180	150	8210G095	8D	❍	-	-	-	10.1/F	11.6/F
3/4	3/4	6.5	5	250	150	100	125	125	125	180	150	8210G003	11D	❍	-	-	-	6.1/F	11.6/F
3/4	3/4	6	0	-	-	-	200	180	180	-	77	8210B026 ② ‡	10P	-	-	-	-	-	30.6/H
3/4	3/4	6	0	350	300	200	-	-	-	200	-	8210G026 ② ‡	40P	●	-	-	-	16.1F	-
1	1	13	0	-	-	-	100	100	80	-	77	8210B054 ‡	31D	-	8210D089	15D	-	-	30.6/H
1	1	13	0	150	125	125	-	-	-	180	-	8210G054	41D	●	8210G089	45D	●	16.1/F	-
1	1	13	5	150	150	100	125	125	125	180	150	8210G004	12D	❍	-	-	-	6.1/F	11.6/F
1	1	13.5	0	300	225	115	-	-	-	200	-	8210G027 ‡	42P	●	-	-	-	20.1/F	-
1	1	13.5	10	300	300	300	-	-	-	175	-	8210G078 ②	13P	-	-	-	-	17.1/F	-
1 1/4	1 1/8	15	0	-	-	-	100	100	80	-	77	8210B055 ‡	32D	-	-	-	-	-	30.6/H
1 1/4	1 1/8	15	0	150	125	125	-	-	-	180	-	8210G055	43D	●	-	-	-	16.1/F	-
1 1/4	1 1/8	15	5	150	150	100	125	125	125	180	150	8210G008	16D	❍	-	-	-	6.1/F	11.6/F
1 1/2	1 1/4	22.5	0	-	-	-	100	100	80	-	77	8210B056 ‡	33D	-	-	-	-	-	30.6/H
1 1/2	1 1/4	22.5	0	150	125	125	-	-	-	180	-	8210G056	44D	●	-	-	-	16.1/F	-
1 1/2	1 1/4	22.5	5	150	150	100	125	125	125	180	150	8210G022	18D	●	-	-	-	6.1/F	11.6/F
2	1 3/4	43	5	150	125	90	50	50	50	180	150	8210G100	20P	●	-	-	-	6.1/F	11.6/F
2 1/2	1 3/4	45	5	150	125	90	50	50	50	180	150	8210G101	21P	●	-	-	-	6.1/F	11.6/F
NORMALLY OPEN (Open when de-energized), NBR Seating (PA Disc-Holder, except as noted)																			
3/8	5/8	3	0	150	150	125	125	125	80	180	150	8210G033	23D	●	-	-	-	10.1/F	11.6/F
3/8	5/8	3	5	250	200	200	250	200	200	180	180	8210G011 ⑧ ⑨	39D	●	-	-	-	10.1/F	11.6/F
1/2	5/8	4	0	150	150	125	125	125	80	180	150	8210G034	23D	●	-	-	-	10.1/F	11.6/F
1/2	5/8	3	0	150	150	100	125	125	80	180	150	-	-	-	8210G030	37D	●	10.1/F	11.6/F
1/2	5/8	4	5	250	200	200	250	200	200	180	180	8210G012 ⑧ ⑨	39D	●	-	-	-	10.1/F	11.6/F
3/4	3/4	5.5	0	150	150	125	125	125	80	180	150	8210G035	25D	●	-	-	-	10.1/F	11.6/F
3/4	5/8	3	0	150	150	100	125	125	80	180	150	-	-	-	8210G038	38D	●	10.1/F	11.6/F
3/4	3/4	6.5	5	-	-	-	250	200	200	-	180	8210C013	24D	●	-	-	-	-	16.8/F
3/4	3/4	6.5	5	250	200	200	-	-	-	180	-	8210G013	46D	●	-	-	-	16.1/F	-
1	1	13	0	125	125	125	-	-	-	180	-	8210B057 ⑥ ⑩	34D	●	-	-	-	20/F	-
1	1	13	5	-	-	-	125	125	125	-	180	8210D014	26D	●	-	-	-	-	16.8/F
1	1	13	5	150	150	125	-	-	-	180	-	8210G014	47D	●	-	-	-	16.1/F	-
1 1/4	1 1/8	15	0	125	125	125	-	-	-	180	-	8210B058 ⑥ ⑩	35D	●	-	-	-	20/F	-
1 1/4	1 1/8	15	5	-	-	-	125	125	125	-	180	8210D018	28D	●	-	-	-	-	16.8/F
1 1/4	1 1/8	15	5	150	150	125	-	-	-	180	-	8210G018	48D	●	-	-	-	16.1/F	-
1 1/2	1 1/4	22.5	0	125	125	125	-	-	-	180	-	8210B059 ⑥ ⑩	36D	●	-	-	-	20/F	-
1 1/2	1 1/4	22.5	5	-	-	-	125	125	125	-	180	8210D032	29D	●	-	-	-	-	16.8/F
1 1/2	1 1/4	22.5	5	150	150	125	-	-	-	180	-	8210G032	49D	●	-	-	-	16.1/F	-
2	1 3/4	43	5	-	-	-	125	125	125	-	150	8210 103	30P	●	-	-	-	-	16.8/F
2	1 3/4	43	5	125	125	125	-	-	-	180	-	8210G103	50P	●	-	-	-	16.1/F	-
2 1/2	1 3/4	45	5	-	-	-	125	125	125	-	150	8210 104	27P	●	-	-	-	-	16.8/F
2 1/2	1 3/4	45	5	125	125	125	-	-	-	180	-	8210G104	51P	●	-			16.1/F	-

① 5 psi on Air; 1 psi on Water.
② Valve provided with PTFE main disc.
③ Valve includes Ultem (G.E. trademark) piston.
④ Letter "D" denotes diaphragm construction; "P" denotes piston construction.
⑤ ❍ Safety Shutoff Valve; ● General Purpose Valve.
Refer to Engineering Section (Approvals) for details.
⑥ Valves not available with Explosionproof enclosures.
⑦ On 50 hertz service, the watt rating for the 6.1/F solenoid is 8.1 watts.
⑧ AC construction also has PA seating.
⑨ No disc-holder.
⑩ Stainless steel disc-holder.
‡ Must have solenoid mounted vertical and upright.

Dimensions: inches (mm)

Const. Ref.		H	K	L	P	W
1*	ins.	3.85	3.00	1.91	3.41	1.69
	mm	98	76	49	87	43
2*	ins.	4.17	3.25	2.28	3.63	1.69
	mm	106	83	58	92	43
5	ins.	3.84	2.31	2.75	3.28	2.28
	mm	98	59	70	83	58
6*	ins.	3.38	1.94	2.75	2.80	2.28
	mm	86	49	70	71	58
7	ins.	4.19	2.50	2.81	3.47	2.39
	mm	106	64	71	88	61
8	ins.	4.13	2.47	2.81	3.44	2.29
	mm	105	63	71	87	58
9*	ins.	3.66	2.10	2.81	2.96	2.28
	mm	93	53	71	75	58
10*	ins.	5.25	X	2.81	4.59	2.31
	mm	133	X	71	117	59
11*	ins.	4.16	2.66	3.84	3.52	2.75
	mm	106	68	98	89	70
12	ins.	5.64	3.15	3.75	4.01	3.36
	mm	143	80	95	102	85
13	ins.	4.44	3.22	3.75	4.19	5.81
	mm	113	82	95	106	147
15*	ins.	5.34	X	3.75	4.47	3.84
	mm	136	X	95	114	98
16	ins.	5.64	3.15	3.66	4.01	3.56
	mm	143	80	93	102	90
18	ins.	6.11	3.30	4.38	4.16	3.92
	mm	155	84	111	106	100
20*	ins.	7.33	3.71	5.06	4.57	4.87
	mm	186	94	129	116	124
21*	ins.	7.33	3.71	5.50	4.57	4.87
	mm	186	94	140	116	124
23	ins.	4.35	2.65	2.75	3.79	2.28
	mm	110	67	70	96	58
24	ins.	5.06	X	3.78	4.44	2.75
	mm	129	X	96	113	70
25	ins.	4.64	2.81	2.81	3.94	2.28
	mm	118	71	71	100	58
26	ins.	6.53	X	3.75	4.91	3.19
	mm	166	X	95	125	81
27	ins.	8.22	X	5.50	5.47	4.87
	mm	209	X	140	139	124
28	ins.	6.53	X	3.66	4.91	3.19
	mm	166	X	93	125	81
29	ins.	7.03	X	4.38	5.06	4.40
	mm	179	X	111	129	112

* DC dimensions slightly larger.
IMPORTANT: Valves may be mounted in any position, except as noted in specifications table.

Const. Ref. 1, 2

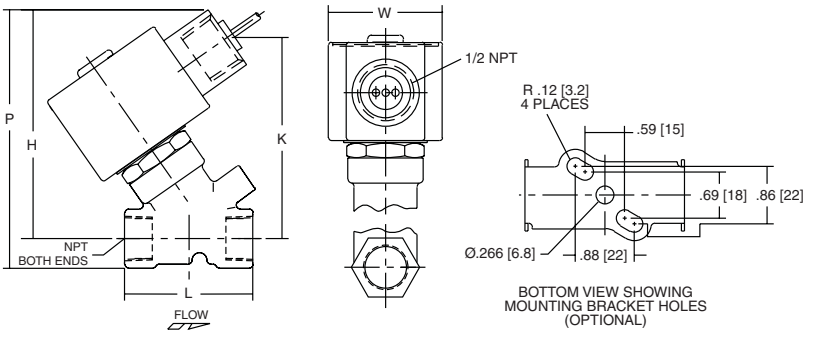

Const. Ref. 13

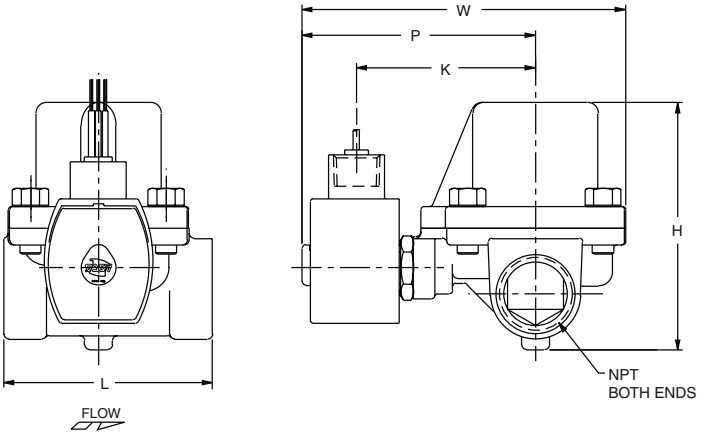

Const. Ref. 5-9, 11, 20, 21, 23 , 25, 37,38

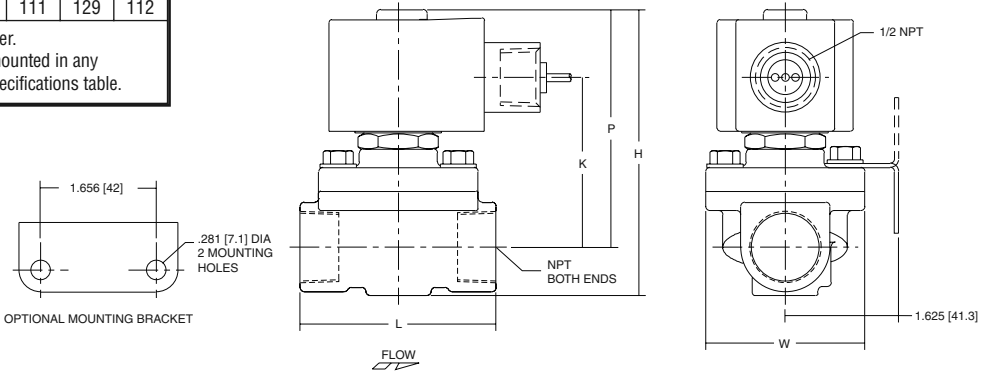

Installation & Maintenance Instructions

2–WAY INTERNAL PILOT–OPERATED SOLENOID VALVES
NORMALLY CLOSED OPERATION — GENERAL SERVICE
1″, 1¼″ OR 1½″ NPT

SERIES
8210
8211

I&M No.V5436R7

NOTICE: See separate solenoid installation and maintenance instructions for information on: Wiring, Solenoid Temperature, Cause of Improper Operation, Coil or Solenoid Replacement.

DESCRIPTION

Series 8210 valves are 2–way normally closed internal pilot–operated solenoid valves designed for general service. Valves are made of rugged forged brass. Series 8210 valves are provided with a general purpose solenoid enclosure.
Series EF8210 and 8211 are the same as Series 8210 except they are provided with an explosionproof or explosionproof/watertight solenoid enclosure.

OPERATION

Normally Closed: Valve is closed when solenoid is de–energized; open when energized.

IMPORTANT: Minimum operating pressure differential is 5 psi.

Manual Operator (optional feature)

Manual operator allows manual operation when desired or during an electrical power outage. To engage manual operator (open the valve), turn lever clockwise until it hits a stop. Valve will now be in the same position as when the solenoid is energized. To disengage manual operator (close the valve), turn lever counterclockwise until it hits a stop.

To engage, turn lever clockwise until it hits a stop.

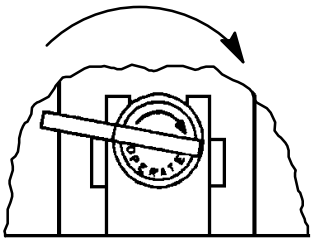

Partial view of Manual Operator

⚠ CAUTION: For valve to operate electrically, manual operator lever must be fully rotated counterclockwise.

INSTALLATION

Check nameplate for correct catalog number, pressure, voltage, frequency, and service. Never apply incompatible fluids or exceed pressure rating of the valve. Installation and valve maintenance to be performed by qualified personnel.

Future Service Considerations

Provision should be made for performing seat leakage, external leakage, and operational tests on the valve with a nonhazardous, noncombustible fluid after disassembly and reassembly.

Temperature Limitations

For maximum valve ambient and fluid temperatures, refer to chart below. Check catalog number prefix and watt rating on nameplate.

Watt Rating AC/DC	Catalog Number Prefix	Solenoid Class	Maximum Ambient Temp.	Maximum Fluid Temp.
6 AC	None or DF	F	122°F (50°C)	180°F (82°C)
	HT	H	140°F (60°C)	180°F (82°C)
6.1 AC	None, KF, SF or SC	F	125°F (54° C)	180°F (82°C)
	HT, KH, ST or SU	H	140°F (60°C)	180°F (82°C)
11.2 DC	None or HT	F or H	77°F (25°C)	150°F (65°C)
11.6 DC	None, HT, KF, KH, SC, SF or ST	F or H	104°F (40°C)	150°F (65°C)

Positioning

This valve is designed to perform properly when mounted in any position. However, for optimum life and performance, the solenoid should be mounted vertically and upright to reduce the possibility of foreign matter accumulating in the solenoid base sub–assembly area.

Piping

Connect piping to valve according to markings on valve body. Apply pipe compound sparingly to male pipe threads only. If applied to valve threads, the compound may enter the valve and cause operational difficulty. Avoid pipe strain by properly supporting and aligning piping. When tightening the pipe, do not use valve or solenoid as a lever. Locate wrenches applied to valve body or piping as close as possible to connection point.

⚠ CAUTION: To protect the solenoid valve, install a strainer or filter suitable for the service involved in the inlet side as close to the valve as possible. Clean periodically depending on service conditions. See ASCO Series 8600, 8601 and 8602 for strainers.

MAINTENANCE

⚠ WARNING: To prevent the possibility of death, serious injury or property damage, turn off electrical power, depressurize valve, and vent fluid to a safe area before servicing the valve.

NOTE: It is not necessary to remove the valve from the pipeline for repairs.

50 Hanover Road, Florham Park, New Jersey 07932 www.ascovalve.com
E177856
All Rights Reserved.

Cleaning

All solenoid valves should be cleaned periodically. The time between cleanings will vary depending on the medium and service conditions. In general, if the voltage to the coil is correct, sluggish valve operation, excessive noise or leakage will indicate that cleaning is required. In the extreme case, faulty valve operation will occur and the valve may fail to open or close. Clean strainer or filter when cleaning the valve.

Preventive Maintenance

- Keep medium flowing through the valve as free from dirt and foreign material as possible.
- Periodic exercise of the valve should be considered if ambient or fluid conditions are such that corrosion, elastomer degradation, fluid contamination build up, or other conditions that could impede solenoid valve shifting are possible. The actual frequency of exercise necessary will depend on specific operating conditions. A successful operating history is the best indication of a proper interval between exercise cycles.
- Depending on the medium and service conditions, periodic inspection of internal valve parts for damage or excessive wear is recommended. Thoroughly clean all parts. If parts are worn or damaged, install a complete rebuild kit.

Causes of Improper Operation

- **Incorrect Pressure:** Check valve pressure. Pressure to valve must be within range specified on nameplate.
- **Excessive Leakage:** Disassemble valve and clean all parts. If parts are worn or damaged, install a complete ASCO Rebuild Kit.

Valve Disassembly

1. Disassemble valve in an orderly fashion using exploded views for identification and placement of parts. Refer to Figure 1 for AC construction; Figure 2 for DC construction. For 1″ or 1 ¼″ NPT valve construction, see Figure 1; for 1 ½″ NPT valve construction, see Figure 2.
2. Remove solenoid enclosure. See separate instructions.

- For valves supplied with optional manual operators, see section on ***Disassembly of Manual Operator***.

3. Unscrew solenoid base sub−assembly from valve body. Then remove core assembly with core spring and solenoid base gasket. For AC construction (Figure 1) core spring is a loose piece.
4. For normal maintenance (cleaning) it is not necessary to remove the valve seat. However, for valve seat removal use a 7/16″ thin wall socket wrench
5. Remove bonnet screws, valve bonnet, diaphragm spring, diaphragm assembly, body gasket, body passage eyelet (present on current valve constructions only) and body passage gasket.
6. All parts are now accessible for cleaning or replacement. If parts are worn or damaged, install a complete ASCO Rebuild Kit.

– Service Notice –

When installing a new ASCO Rebuild Kit, please be aware that the diaphragm assembly may not be identical to the diaphragm assembly in the valve. See Figure 1 for alternate diaphragm constructions. The two diaphragm constructions are interchangeable and will perform equally well.

⚠ CAUTION: To ensure proper valve operation, install all parts supplied in ASCO Rebuild Kit. Do not mix old and new parts.

Valve Reassembly

1. Lubricate body gasket, body passage gasket, bonnet gasket and solenoid base gasket with DOW CORNING® 200 Fluid lubricant or an equivalent high−grade silicone fluid.
2. Install body passage gasket, body passage eyelet, diaphragm assembly, diaphragm spring, valve bonnet and bonnet screws. Hand thread screws as far as possible. Then torque bonnet screws in a crisscross manner to 144 ± 15 in−lbs [16,3 ± 1,7 Nm].
3. If removed, install valve seat in valve body. Apply a small amount of thread compound compatible with valve media to valve seat threads. Torque valve seat to 75 ± 10 in−lbs [8,5 ± 1,1 Nm].

- For valves supplied with optional manual operator, see section on ***Reassembly of Manual Operator***.

4. For AC construction (Figure 1), install core spring in core assembly. Wide end of core spring in core first, closed end protrudes from top of core.
5. Install solenoid base gasket, core assembly with core spring and solenoid base sub−assembly in valve body. Torque solenoid base sub−assembly to 175 ± 25 in−lbs [19,8 ± 2,8 Nm].
6. Install solenoid. See separate instructions.

⚠ WARNING: To prevent the possibility of death, serious injury or property damage, check valve for proper operation before returning to service. Also perform internal seat and external leakage tests with a nonhazardous, noncombustible fluid.

7. Restore line pressure and electrical power supply to valve.
8. After maintenance is completed, operate the valve a few times to be sure of proper operation. A metallic *click* indicates the solenoid is operating.

Disassembly of Manual Operator

1. Unscrew solenoid base sub−assembly from manual operator body.
2. Unscrew manual operator body from valve body. Then remove stem retainer from base of manual operator body and stem/spacer sub−assembly.
3. Pull stem/spacer sub−assembly with stem gasket from side of manual operator body. Then remove core assembly with core spring, solenoid base gasket and manual operator bonnet gasket.
4. For further disassembly refer to section on ***Valve Disassembly*** step 4.

Reassembly of Manual Operator

1. Lubricate stem gasket with DOW CORNING® 111 Compound lubricant or an equivalent high−grade silicone grease.
2. For AC construction (Figure 1), install core spring in core assembly. Wide end of core spring in core first, closed end protrudes from top of core.
3. Holding the manual operator body in a horizontal position, install core assembly with core spring from the bottom end.
4. Insert the stem/spacer sub−assembly with the stem gasket into the side hole of the manual operator body. Rotate the lever of the stem/spacer sub−assembly to the 12 o'clock position.
5. Install stem retainer on base of manual operator body and simultaneously engage it into the slot provided on the stem/spacer sub−assembly.

IMPORTANT: The spacer on the stem/spacer sub−assembly *must be inside* of the stem retainer for AC construction (Figure 1) and *outside* of the stem retainer for DC construction (Figure 2).

6. Install manual operator bonnet gasket and body with preassembled parts into valve body. Torque manual operator body to 175 ± 25 in−lbs [19,8 ± 2,8 Nm].
7. Replace solenoid base gasket and solenoid base sub−assembly. Torque solenoid base sub−assembly to 175 ± 25 in−lbs [19,8 ± 2,8 Nm].
8. For further reassembly, refer to ***Valve Reassembly*** step 6.

Torque Chart

Part Name	Torque Value Inch–Pounds	Torque Value Newton–Meters
Solenoid base sub–assembly	175 ± 25	19,8 ± 2,8
Manual operator body		
Bonnet screw	144 ± 15	16,3 ± 1,7
Valve seat	75 ± 10	8,5 ± 1,1

ORDERING INFORMATION FOR ASCO REBUILD KITS

Parts marked with an asterisk (*) in the exploded view are supplied in Rebuild Kits. When Ordering Rebuild Kits for ASCO valves, order the Rebuild Kit number stamped on the valve nameplate. If the number of the kit is not visible, order by indicating the number of kits required, and the Catalog Number and Serial Number of the valve(s) for which they are intended.

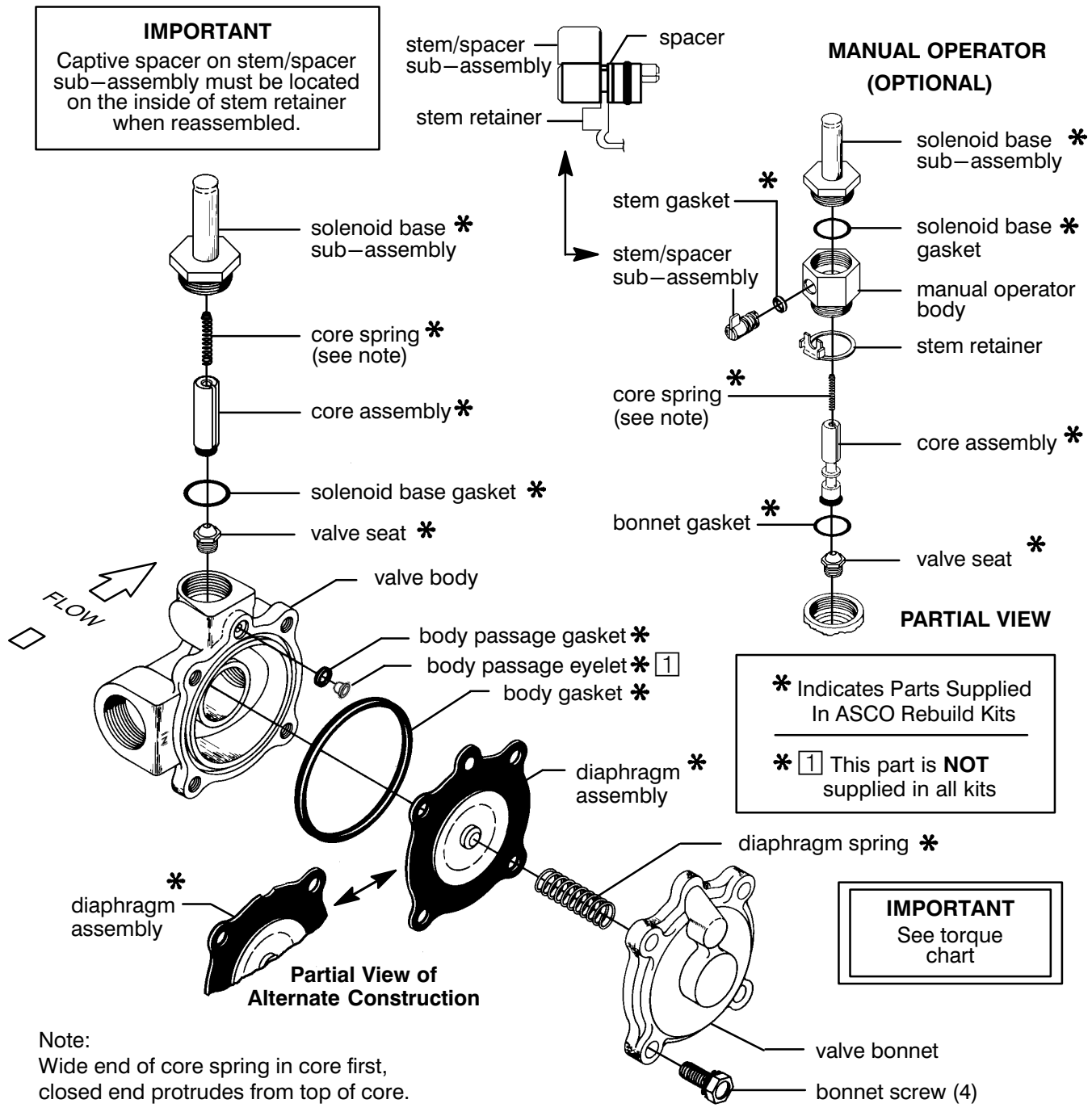

Figure 1. Series 8210 valve without solenoid, AC construction with 1″ or 1 ¼″ NPT valve body shown.

ASCO® 50 Hanover Road, Florham Park, New Jersey 07932 www.ascovalve.com

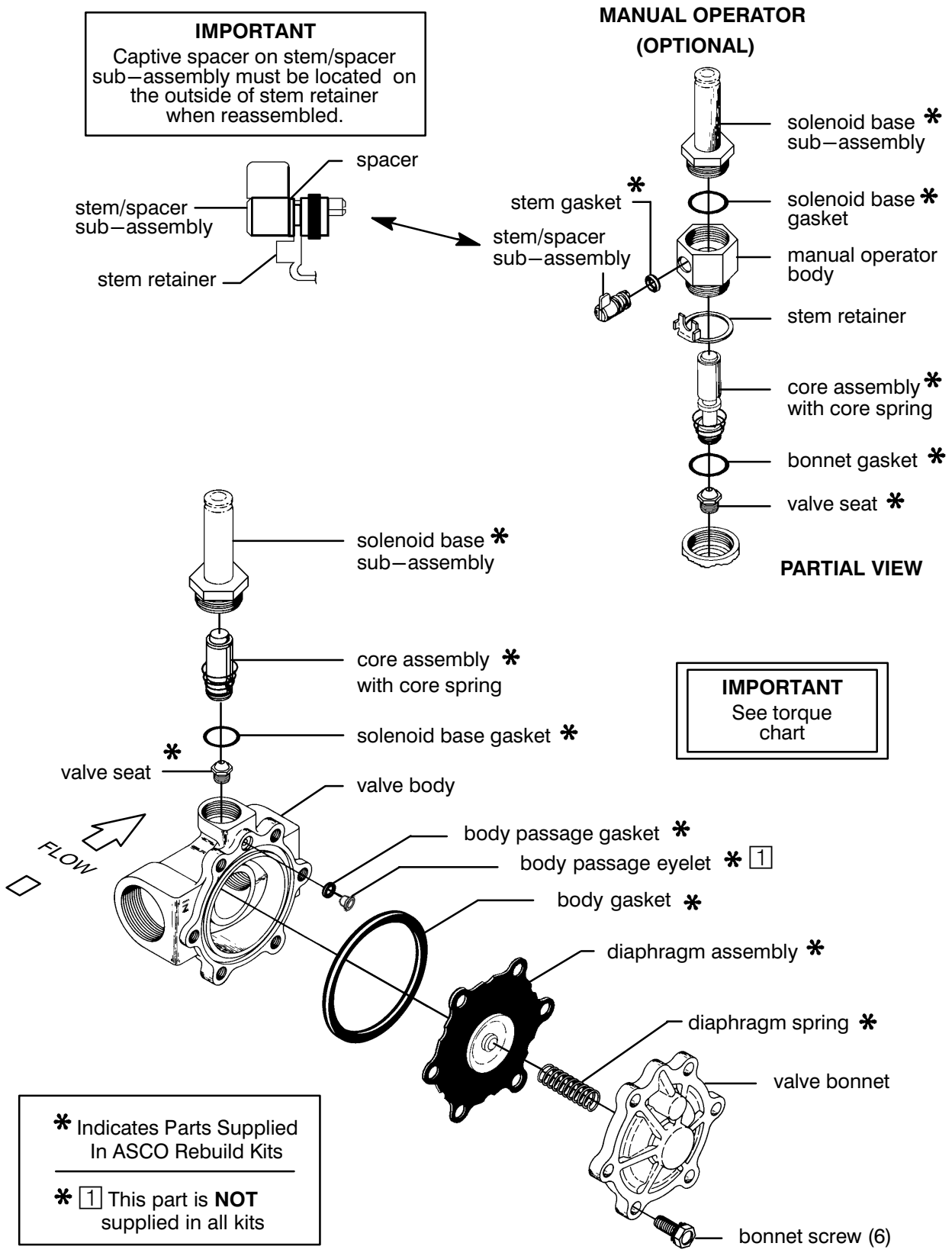

Figure 2. Series 8210 valve without solenoid, DC construction with 1 ½″ NPT valve body shown.

ASCO® 50 Hanover Road, Florham Park, New Jersey 07932 www.ascovalve.com

Meridian™ Ball Valve

Model #: MAC2SF

2000 WOG 2-PIECE FULL BORE

FEATURES

- ASME B16.34 design
- Threaded ends conform to ASME B1.20.1 (NPT)
- Seal welded body
- Investment casting
- Blow-out proof stem
- 2000 psi (1/4" to 1") CL 800
- 1500 psi (1 1/4" to 2") CL 600
- 1000 psi (2 1/2" to 3") CL 400
- Glassfibre filled PTFE seats
- PTFE packing
- Latch lock handle
- Mounting pad
- Sour / NACE Service

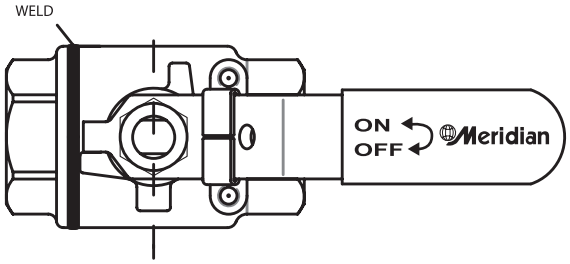

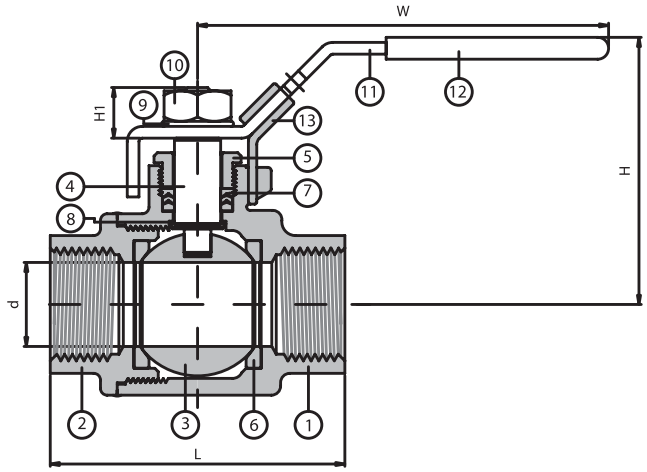

ITEM	PARTS	MATERIAL
1	BODY	ASTM A351-CF8M
2	END CAP	ASTM A351-CF8M
3	BALL	ASTM A351-CF8M
4	STEM	ASTM A276-316
5	GLAND RING	AISI 304
6	BALL SEAT	R-PTFE
7	PACKING	PTFE
8	THRUST WASHER	PTFE
9	SPRING WASHER	AISI 304
10	NUT	AISI 304
11	HANDLE	AISI 304
12	HANDLE SLEEVE	PVC
13	LOCK DEVICE	AISI 304

DN	d	L	H	H1	W	Cv
8	11.6	60.5	53.6	10.5	102	10
10	12.8	60.5	53.6	10.5	102	10
15	15	62.5	57	10.5	102	12
20	20.2	77	62.1	13.5	124	35
25	25.6	90	80	15.7	165	60
32	32	100	83.7	15.7	165	100
40	38	118.2	99	17	188	150
50	50.8	138	106.9	17	188	250
65	65.5	167	141.9	27.5	250	400
80	80	193	152.8	27.5	250	600

NPS	d	L	H	H1	W	Cv
1/4"	0.46	2.38	2.11	0.41	4.02	10
3/8"	0.50	2.38	2.11	0.41	4.02	10
1/2"	0.59	2.46	2.24	0.41	4.02	12
3/4"	0.80	3.03	2.44	0.53	4.88	35
1"	1.01	3.54	3.15	0.62	6.50	60
1-1/4"	1.26	3.94	3.30	0.62	6.50	100
1-1/2"	1.50	4.65	3.90	0.67	7.40	150
2"	2	5.43	4.21	0.67	7.40	250
2-1/2"	2.58	6.57	5.59	1.08	9.84	400
3"	3.15	7.6	6.02	1.08	9.84	600

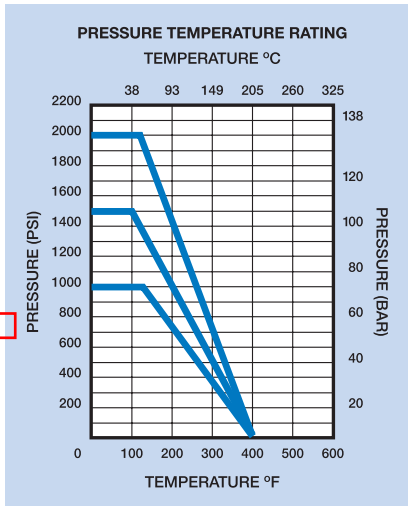

Meridian™ *Canada's Valve Specialist*

DUE TO CONTINUOUS DEVELOPMENT OF OUR PRODUCTS, WE RESERVE THE RIGHT TO MODIFY OUR PRODUCT DESIGN OR CONSTRUCTION WITHOUT PRIOR NOTICE.

DOC 187 04/2006

Meridian
VALVES • VALVE AUTOMATION

Installation Operation & Maintenance Instructions

Storage

- Meridian valves are protected with rust inhibitors and are sealed to stop entry of foreign matter. We recommend that the product be stored indoors in an appropriate environment.
- If crated product is to be stored for prolonged periods, the desiccant must be functioning at all times.
- Crates should not be stacked without suitable support.

Health and Safety

- Prior to starting any work, a risk assessment should be made and any hazards be removed or be reduced to a safe level.
- Before removal or installation of product, ensure the line has been completely depressurized.
- Health and Safety procedures are to be followed at all times.
- Ensure that the valve is correctly rated for the intended service.

Preparation

- The work area must be clean and free from debris.
- Valves generally contain a residual mineral oil protective coating and/or traces of Glycol from hydro testing. This residue should be removed if not compatible with process.
- End covers are fitted to protect sealing surfaces and prevent entry of contaminants; internal inspection is to be made to ensure valve internals are free to move and bores are clean.
- End covers should be left in place until installation.
- Inspect valve markings for pipe flow orientation and position valve correctly.

Installation Instructions

- The installer must have the experience and qualifications to correctly install the valve.
- The installer is to be familiar with publication MSS SP-92 (Valve User Guide).

Threaded End Valves

- Threads in the valve and pipe should be inspected for structure and cleanliness.
- Apply a suitable sealant to the pipe threads when required.
- Rotate the valve onto the pipe end using a suitable wrench applied to the valve end being assembled.
- **Do not** use the valve handle or stem to rotate, damage to the pressure boundary seals can result.

Weld End Valves

- The approved weld procedure for the material and wall thickness must be used.
- If the ground strap is attached to the pipe, the valve being welded should not be between the hot lead and the ground. Never connect ground strap to the stem or handle. This is to prevent internal seat damage due to arcing caused by air gaps or stem isolation.
- Position the fully assembled valve (Butt & Socket) in the open or closed position as required to prevent contamination of weld splatter or arcing.
- To allow for expansion, the pipe end is to be positioned with sufficient air gap at the valve.
- Tack weld into position before commencing the final weld procedure.

contiued on back...

Meridian
VALVES • VALVE AUTOMATION

Flanged End Valves

- Inspect the mating flange facings for any damage that will prevent a satisfactory seal. Repair prior to installation.
- Flange bolting must be of the correct material, diameter and length.
- Preassembly and alignment is essential to prevent undue pipe stress being transmitted through the valve body.
- Ensure that any moving parts do not interfere with the function of adjacent equipment.
- The use of lubricant for bolting and the use of a torque wrench is recommend.
- Bolts should be torqued evenly in an opposite and rotational manner until the recommended value is reached, or the bolt load has deformed the sealing gasket sufficiently to obtain the necessary sealed joint.

Operation

- Industry standards are:
  - Clockwise rotation of the stem will CLOSE the valve,
  - Anti-clockwise will OPEN.
- When requested, new on/off valves are accompanied with a certificate proving closure performance.
- Do not leave any valve in a partially open position if the flowing service fluid can damage the disc or seat surfaces.
- Speed of valve closure should be considered with liquid systems where rapid element closure will cause "Water Hammer" and its associated damaging forces.

Maintenance

- Periodic inspection of pressure boundary connections should be done to check for possible process leaks. Appropriate adjustments are to be made where needed.
- Sealant /lubrication at the fittings should be done at intervals appropriate with the conditions of operation.
- If an installed valve is left unused for six months, the valve is to be cycled to prevent seat seizure and failure.

Repair Kits and Spare Parts

- The technical specification indicated on the valve nameplate should be quoted when you contact sales@meridianvalve.ca or its local supplier.
- Operating conditions should be provided, if available, as an aid in spares selection.

DURA-SHIELD™ SHAFT SEALS
ENGINEERED SEALING SYSTEMS

HD Series / DURA-SHIELD Engineered Seals eliminate the costly problems associated with shaft leakage. Contaminated bearings wear quickly and create an unsafe work place environment. HD Series seals drastically reduce on-going maintenance costs associated with sealing abrasive wet and dry product.

Developed to address the need for a standard heavy duty seal that can be easily custom configured to address the most difficult applications like High Temperature, Fast shaft speed, Excessive face pressure or Screw conveyor drive mounting.
The HD Series Seals function and install just like our SD Series with the added benefit of strength and longer seal life.

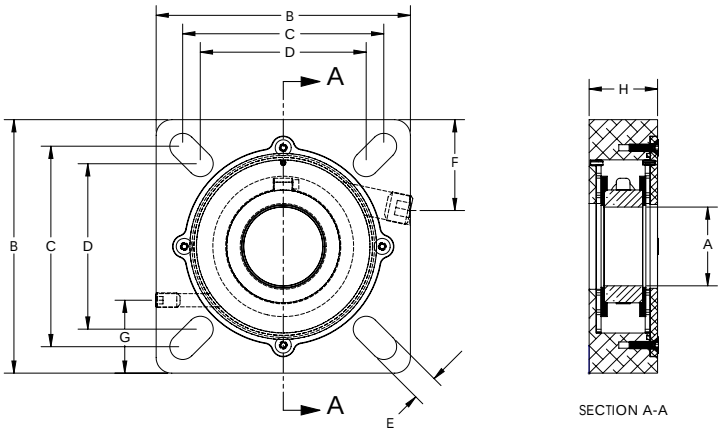

HD Series Technical Data-

- Min. & Max. Operating Temp. / **-60˚F to +600˚F**
- Pressure Holding / **20 psig.**
- Vacuum Holding / **10 hg.**
- Air Purge Connection Start Pressure / **15 - 20 psig.**
- Typical Air loss / **1.5 - 2.0 SCFM**
- Torque setting for seal mounting / **50 pounds**
- Maximum Shaft Run Out / **1/4" TIR.**
- Stuffing Box Misalignment / **.015 TIR per inch of shaft**
- Shaft Growth / **+/- 1/16"**
- Shaft Tolerance / **+/- 1/16"**
- Max. Out of Square Mounting Deviation / **1°**
- Field Repairable / **YES**
- Food Service / **Can Have Materials Up-Graded**
- Chemical Resistant Materials Available / **YES**
- High Temperature Versions Available / **YES**
- Custom Designs Available / **NO**
- Standard Housing Material / **Aluminum and Stainless**
- Standard Stainless Steel Type / **304SS**
- Standard Elastomer Type / **Silicone**
- Standard Seal Thickness / **1-7/8"**
- Minimum Available Seal Thickness / **1-7/8"**
- Maximum Shaft Speed / **Do Not Exceed 800 FPM**

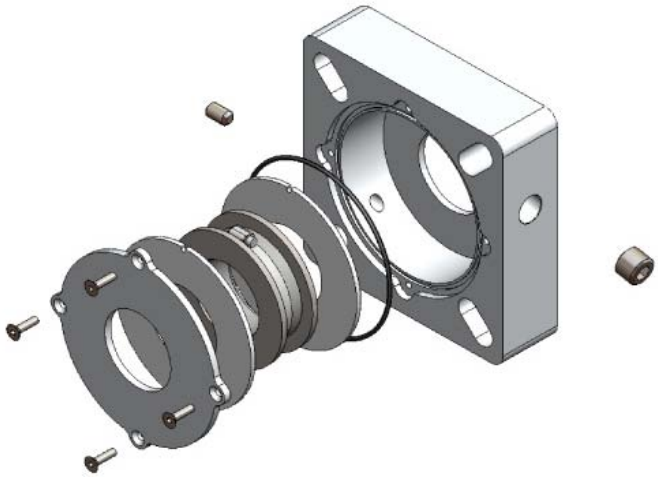

No other additional configurations available.

Shaft Diameter -A-	Housing -B-	Bolt Sq. Max. -C-	Bolt Sq. Min. -D-	Slot Width -E-	Elastomer Adjust. -F-	Air Connect -G-	Seal Width -H-
5/8"-1.00"	4.25	3.25	2.25	.48	1.51	1.38	1-7/8"
1.25"	4.75"	3.63"	2.88"	.48"	1.62"	1.63"	1-7/8"
1.50"	5.50"	4.25"	3.87"	.66"	1.78"	1.74"	1-7/8"
2.00"	6.50"	5.14"	4.24"	.66"	2.33"	1.87"	1-7/8"
2.19"	7.25"	5.63"	4.88"	.68"	2.60"	2.54"	1-7/8"
2.43"	7.50"	6.00"	5.25"	.68"	2.55"	2.58"	1-7/8"
3.00"	8.00"	6.13"	5.88"	.80"	2.55"	2.62"	1-7/8"
3.43"	9.25"	7.48"	6.17"	.80"	3.09"	3.30"	1-7/8"
3.94"-4.00"	10.25"	8.16"	6.67"	.94"	3.48"	3.69"	1-7/8"
4.43"-4.50"	10.88"	8.88"	7.75"	.94"	3.46"	3.62"	1-7/8"

Dimensionally configured for CEMA compliant and Dodge E and SCM type bearings.

Warminster, PA 18974-3867 USA
Telephone: (215)-682-9643 Fax: (215)-682-9644
www.AGDPRODUCTS.com

NF

Standard Fan Nozzle

DESIGN FEATURES
- One-piece construction
- No internal parts
- Sizes for all applications
- Male connection

SPRAY CHARACTERISTICS
- High impact
- Uniform distribution with tapered edges for overlapping sprays
- Extra-wide angles available

Spray pattern: Fan and Straight Jet
Spray angles: 0° to 120°
Flow rates: 0.103 to 1380 gpm

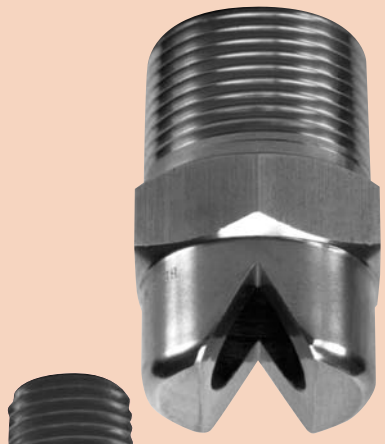

Metal

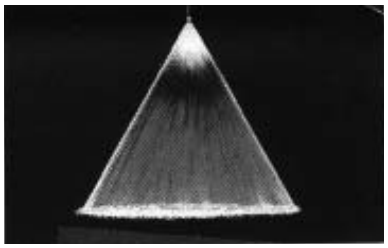

Fan 50°

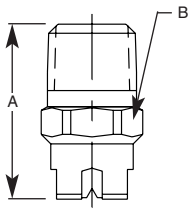

3/8" - 2" Metal

NF Flow Rates

Fan and Straight Jet, 0˚, 15˚, 30˚, 50˚, 65˚, 80˚, 90˚, 110˚, and 120˚ Spray Angles, 1/8" to 2" Pipe Sizes

Male Pipe Size	Nozzle Number	K Factor	GALLONS PER MINUTE @ PSI 5 PSI	10 PSI	15 PSI	20 PSI	30 PSI	40 PSI	60 PSI	80 PSI	100 PSI	150 PSI	200 PSI	400 PSI	Equiv. Orifice Dia. (in.)
	NF01	0.0158	0.03	0.05	0.06	0.07	0.09	**0.10**	0.12	0.14	0.16	0.19	0.22	0.32	0.026
1/8	NF015	0.0237	0.05	0.08	0.09	0.11	0.13	**0.15**	0.18	0.21	0.24	0.29	0.34	0.47	0.031
	NF02	0.0316	0.07	0.10	0.12	0.14	0.17	**0.20**	0.25	0.28	0.32	0.39	0.45	0.63	0.036
or	NF025	0.0395	0.09	0.13	0.15	0.18	0.22	**0.25**	0.31	0.35	0.40	0.48	0.56	0.79	0.040
	NF03	0.0474	0.11	0.15	0.18	0.21	0.26	**0.30**	0.37	0.42	0.47	0.58	0.67	0.95	0.043
1/4	NF04	0.0632	0.14	0.20	0.25	0.28	0.35	**0.40**	0.49	0.57	0.63	0.78	0.89	1.25	0.052
	NF05	0.0791	0.18	0.25	0.31	0.35	0.43	**0.50**	0.61	0.71	0.79	0.97	1.12	1.58	0.057
	NF06	0.0949	0.21	0.30	0.37	0.42	0.52	**0.60**	0.74	0.85	0.95	1.16	1.34	1.90	0.062
	NF08	0.126	0.28	0.40	0.49	0.57	0.69	**0.80**	0.98	1.13	1.26	1.55	1.79	2.53	0.072
1/8	NF10	0.158	0.35	0.50	0.61	0.71	0.87	**1.00**	1.22	1.41	1.58	1.94	2.24	3.16	0.080
or	NF15	0.237	0.53	0.75	0.92	1.06	1.30	**1.50**	1.84	2.12	2.37	2.90	3.35	4.74	0.094
1/4	NF20	0.316	0.71	1.00	1.22	1.41	1.73	**2.00**	2.45	2.83	3.16	3.87	4.47	6.32	0.109
or	NF30	0.474	1.06	1.50	1.84	2.12	2.60	**3.00**	3.67	4.24	4.74	5.81	6.71	9.49	0.141
3/8	NF40	0.632	1.41	2.00	2.45	2.83	3.46	**4.00**	4.90	5.66	6.32	7.75	8.94	12.6	0.156
1/4	NF50	0.791	1.77	2.50	3.06	3.54	4.33	**5.00**	6.12	7.07	7.91	9.68	11.2	15.8	0.172
or	NF60	0.949	2.12	3.00	3.67	4.24	5.20	**6.00**	7.35	8.49	9.49	11.6	13.4	19.0	0.186
3/8	NF70	1.11	2.47	3.50	4.29	4.95	6.06	**7.00**	8.57	9.90	11.1	13.6	15.6	22.1	0.203
	NF60	0.949	2.12	3.00	3.67	4.24	5.20	**6.00**	7.35	8.49	9.49	11.6	13.4	19.0	0.186
3/8	NF70	1.11	2.47	3.50	4.29	4.95	6.06	**7.00**	8.57	9.90	11.1	13.6	15.6	22.1	0.203
or	NF80	1.26	2.83	4.00	4.90	5.66	6.93	**8.00**	9.80	11.3	12.6	15.5	17.9	25.3	0.219
1/2	NF90	1.42	3.18	4.50	5.51	6.36	7.79	**9.00**	11.0	12.7	14.2	17.4	20.1	28.5	0.234
	NF100	1.58	3.54	5.00	6.12	7.07	8.66	**10.0**	12.2	14.1	15.8	19.4	22.4	31.6	0.250
	NF120	1.90	4.24	6.00	7.35	8.49	10.4	**12.0**	14.7	17.0	19.0	23.2	26.8	37.9	0.266
1/2	NF150	2.37	5.30	7.50	9.19	10.6	13.0	**15.0**	18.4	21.2	23.7	29.0	33.5	47.4	0.297
	NF200	3.16	7.07	10.0	12.2	14.1	17.3	**20.0**	24.5	28.3	31.6	38.7	44.7	63.2	0.344
3/4	NF300	4.74	10.6	15.0	18.4	21.2	26.0	**30.0**	36.7	42.4	47.4	58.1	67.1	94.9	0.422
	NF400	6.32	14.1	20.0	24.5	28.3	34.6	**40.0**	49.0	56.6	63.2	77.5	89.4	126	0.500
1	NF400	6.32	14.1	20.0	24.5	28.3	34.6	**40.0**	49.0	56.6	63.2	77.5	89.4	126	0.500
	NF750	11.9	26.5	37.5	45.9	53.0	64.9	**75.0**	92.0	106	119	145	168	237	0.688
1 1/4	NF800	12.6	28.3	40.0	49.0	56.6	69.3	**80.0**	98.0	113	126	155	179	253	0.719
	NF1150	18.2	40.7	57.5	70.4	81.3	100	**115**	141	163	182	223	257	364	0.859
1 1/2	NF1500	23.7	53.0	75.0	91.9	106	130	**150**	184	212	237	290	335	474	0.969
2	NF2250	35.6	79.5	113	138	160	195	**225**	276	318	356	436	500	715	1.31

NF Dimensions

Pipe Size	Dim. for Metal Only (in.) A	B	Wt. (oz.) Metal	Plas.
1/8	0.88	0.44	1.00	0.25
1/4	1.06	0.56	1.50	0.38
3/8	1.25	0.69	2.00	0.50
1/2	1.50	0.88	3.00	1.00
3/4	1.75	1.13	6.00	1.50
1	2.19	1.38	8.00	2.00
1 1/4	2.50	1.75	12.0	3.00
1 1/2	3.00	2.00	20.0	5.00
2	3.50	2.50	56.0	10.0

Flow Rate (GPM) $= K\sqrt{PSI}$ **Standard Materials: Brass, 303 Stainless Steel, 316 Stainless Steel, PVC and PTFE** (PTFE not available in nozzle numbers below NF025). See chart on page 21 for complete list.

CALL 413-772-2166
Call for the name of your nearest BETE representative.

WL

Low Flow/Full Cone

DESIGN FEATURES
- Advanced whirl plate design produces uniform coverage
- Male and female connections

SPRAY CHARACTERISTICS
- Medium to coarse atomization

Spray pattern: Full Cone. Square pattern available

Spray angles: 30°, 60°, 90° and 120° standard

Flow rates: 0.13 to 59 gpm

Metal

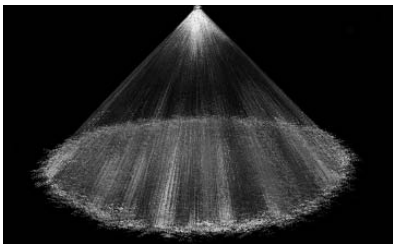

Full Cone 90°

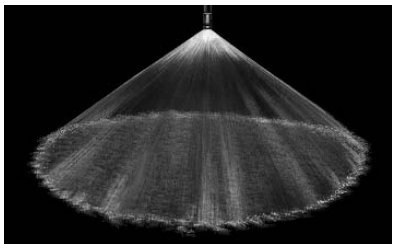

Full Cone 120°

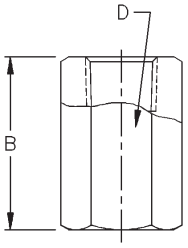

Female Metal

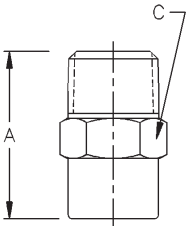

Male Metal

WL Flow Rates and Dimensions

Full Cone, 30˚, 60˚, 90˚ and 120˚ Spray Angles

Male or Female Pipe Size	Nozzle Number	K Factor	GALLONS PER MINUTE @ PSI 10 PSI	20 PSI	30 PSI	40 PSI	60 PSI	80 PSI	100 PSI	150 PSI	200 PSI	400 PSI	Approx. Orifice Dia. (in.)	Dimensions for Metal Only (in.) A	B	C	D	Wt. (oz.) Metal	Plas.
	WL 1/4	0.044	0.13	0.18	0.22	**0.25**	0.30	0.35	0.38	0.47	0.53	0.74	0.043						
1/8	WL 1/2	0.088	0.26	0.36	0.44	**0.50**	0.60	0.69	0.77	0.93	1.07	1.48	0.055	0.88	1.13	0.44	0.56	1.00	0.25
	WL 3/4	0.132	0.39	0.54	0.66	**0.75**	0.91	1.04	1.15	1.40	1.60	2.21	0.072						
	WL 1	0.177	0.52	0.72	0.87	**1.00**	1.21	1.39	1.54	1.86	2.13	2.95	0.082						
1/4	WL 1 1/2	0.265	0.78	1.08	1.31	**1.50**	1.81	2.08	2.31	2.79	3.20	4.43	0.109	1.06	1.38	0.56	0.69	1.50	0.38
	WL 2	0.353	1.04	1.44	1.75	**2.00**	2.42	2.77	3.08	3.72	4.26	5.90	0.125						
3/8	WL 3	0.530	1.56	2.17	2.62	**3.00**	3.63	4.16	4.61	5.58	6.39	8.85	0.156	1.25	1.50	0.69	0.88	2.00	0.50
	WL 4	0.706	2.08	2.89	3.49	**4.00**	4.84	5.54	6.15	7.44	8.52	11.8	0.188						
	WL 5	0.883	2.61	3.61	4.37	**5.00**	6.05	6.93	7.69	9.31	10.6	14.8	0.203						
1/2	WL 6	1.06	3.13	4.33	5.24	**6.00**	7.26	8.31	9.23	11.2	12.8	17.7	0.219	1.50	2.00	0.88	1.13	3.00	1.00
	WL 7	1.24	3.65	5.05	6.11	**7.00**	8.47	9.70	10.8	13.0	14.9	20.7	0.228						
	WL 8	1.41	4.17	5.78	6.99	**8.00**	9.68	11.1	12.3	14.9	17.0	23.6	0.234						
3/4	WL 10	1.77	5.21	7.22	8.74	**10.0**	12.1	13.8	15.4	18.6	21.3	29.5	0.281	1.75	2.13	1.13	1.38	6.00	1.50
	WL 12	2.12	6.25	8.66	10.5	**12.0**	14.5	16.6	18.5	22.3	25.6	35.4	0.312						
	WL 15	2.65	7.82	10.8	13.1	**15.0**	18.1	20.8	23.1	27.9	32.0	44.3	0.328						
1	WL 20	3.53	10.4	14.4	17.5	**20.0**	24.2	27.7	30.8	37.2	42.6	59.0	0.375	2.19	2.38	1.38	1.63	14.0	3.50

$$Flow\ Rate\ (GPM) = K\ (PSI)^{0.47}$$

Standard Materials: Brass, 303 Stainless Steel, 316 Stainless Steel, PVC, Polypropylene and PTFE (1/8" PTFE and Polypropylene not available in 120˚) . See chart on page 21 for complete list.

TO ORDER: *specify pipe size, connection type, nozzle number, spray angle, and material.*

10.34 - L1 – LVC GATE VALVE

LINED VALVE COMPANY

FIGURE 93
INSTALLATION AND MAINTENANCE

DESCRIPTION

The LVC Fig 93 is a bonnetless knife gate valve. It has either a metal to metal or a metal to o-ring seat. In either case it is a unidirectional valve, meaning that there is a preferred seating direction. Four rows of packing are used to seal between the gate and the body. The pressure rating of the Fig 93 valve is 150 PSI CWP (Cold Working Pressure).

SHIPPING & STORAGE

For shipment the valve will be in the closed position. Small valves (3", 4", and 6") may be shipped in individual boxes. Larger valves and large quantities will be shipped on pallets, skids or in boxes, all of which will require a forklift for moving. Storage should be in a clean dry environment such as a warehouse.

INSTALLATION

Find the marking on the valve body near the top flange that says "**SEAT SIDE**". This is the down stream side of the valve. Be sure to install the valve so that pressure enters the upstream side of the valve and flows out of the downstream side of the valve. Failure to install the valve properly can result in damage to the valve gate.

Install the valve to the mating pipe flange using proper size bolts. See Chart 1 for bolt size. Bolt length is not included on Chart 1 since different flanges will require different length bolts. It is very important to choose the proper length of bolt for the bolt holes in the chest of the valve. These holes are bottom drilled and tapped holes and in some cases contain less than a bolt diameter of threads. Be careful not to bottom out bolts in the chest during installation. If necessary use washers to shorten the penetration of the bolt into the chest holes. Chart 2 gives recommended bolt torques to be used during installation, however, depending on the type of gaskets being used the required torques may be higher or lower. Use the cross torque pattern method for tightening the bolts. Mating flanges must be parallel and true with each other and the valve. Do not use the valve to pull together or force apart the two mating pipes.

After installation, open and close the valve once to assure smooth operation.

FIGURE 93 MAINTENANCE

The only items requiring maintenance on the Fig 93 knife gate valve are the packing and the lubrication of the stem. The packing gland may require adjustment after installation, especially if the valve has been in storage for a long time. All sizes of the Fig 93 valve have four or more packing gland bolts except for 3" and smaller valves. When adjusting packing on valves with four of more bolts, it is best to tighten the bolts on the side opposite the seat side first. Normally just a small amount of tightening per bolt is required. Do not tighten the bolts more than is necessary to stop the leaks. Adjust the packing gland down evenly to avoid the possibility of the gland rubbing on the gate as it moves. Generally, the more a valve is operated the more maintenance will be required to keep packing leaks under control.

Lubricate the stem nut and stem by using a grease gun on the grease fitting at the top of the yoke.

CHART 1

VALVE SIZE (IN)	BOLT SIZE (IN)	NUMBER FLANGE BOLTS
3”	5/8-11	4
4”	5/8-11	8
6”	3/4-10	8
8”	3/4-10	8
10”	7/8-9	12
12”	7/8-9	12
14”	1-8	12
16”	1-8	16
18”	1-1/8-7	16
20”	1-1/8-7	20
24”	1-1/4-7	20
30”	1-1/4-7	28
36”	1-1/2-6	32
42”	1-1/2-6	36
48”	1-1/2-6	44

CHART 2

VALVE SIZE (IN)	RECOMMENDED TIGHTENING TORQUE* (FT-LBS)
2”-3”	55 +/- 5
4”-8”	65 +/- 5
10”-12”	110 +/- 10
14”-16”	135 +/- 10
18”-24”	150 +/- 10
30”	200 +/- 10
36” - 48”	250 +/- 10

CONNECT WITH US

675 Mitchell Avenue
Woodland, WA 98674
E-mail: sales@linedvci.com

Tel: 360-225-1230
888-256-5779
Fax: 360-225-1235

10.35 - N1 – NEOTECH AQUA UV TREATMENT SYSTEM

NEOTECH™
AQUA SOLUTIONS
The World's Most Advanced UV Technology™

Installation, Operation, and Maintenance Manual

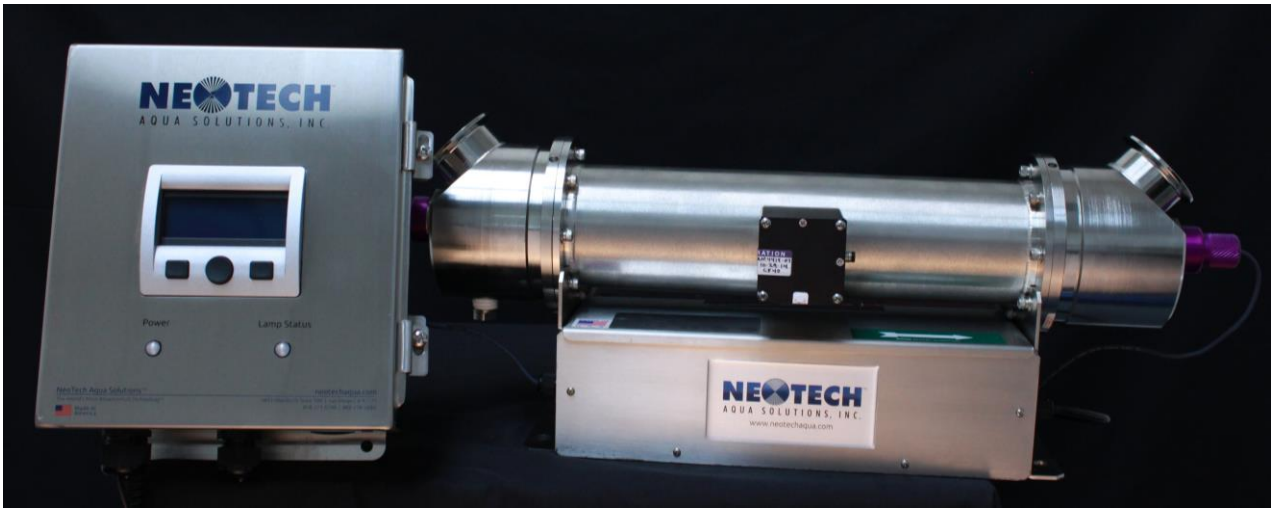

Series 3
Ultraviolet Water Purification Systems

Control Box Version 4
UV Monitor Type 3
Firmware 2031

Copyright by NeoTech Aqua Solutions, Inc. All rights reserved

Table of Contents:

INTRODUCTION 3
SYSTEM COMPONENTS 3
SAFETY PRECAUTIONS 4
WATER QUALITY 5
INSTALLATION 6
Unpacking 6
Unit Mounting 6
Water Connections 7
Electrical Connections 8
Ballast Cable Connections 9
External Interface Connections 10
Remote Run/Stop 11
Remote UV Intensity Monitor 12
Remote Fault Indicator 13
OPERATION 14
Setting System Parameters in the Control Box 15
Alarms 18
History 19
Setup Menu 21
Chamber Selection 21
Display Selection 22
Lamp Status Mode 23
Setting the Low UV Output Alarm Setpoint(s) - Background 24
UV Intensity Mode 26
Dosimetry Mode 28
Lamp Hour Reset 30
Support 32
About 33
Resetting the Control Box 34
MAINTENANCE 35
OPERATIONS AND MAINTENANCE LOG 36
TROUBLESHOOTING 37
SPARE PARTS 38
SPECIFICATIONS 39
LIMITED WARRANTY 43
Appendix A. Equipment Certificates 45
Appendix B. Mounting Diagrams 50

INTRODUCTION

Congratulations and welcome to the growing community of users that have discovered the benefits of the Series 3 UV water purification systems developed by NeoTech Aqua Solutions (NTAS).

The innovative design of the Series 3 ultraviolet reactors significantly increases the overall effectiveness of UV lamps for water purification. Because NTAS systems are more efficient, they require fewer lamps and less energy to achieve a given treatment level. As a result, NTAS systems have a smaller footprint and cost less to own and operate.

The NTAS Series 3 unit you have purchased is a high performance system which, with the proper lamp(s) can be used for microbial disinfection, ozone destruction, TOC reduction, or chlorine/chloramine reduction. The sanitary and durable construction of your NTAS system is suitable for even the most stringent applications, such as production of ultrapure water for semiconductor manufacturing or USP water-for-injection (WFI). If you have any questions about your specific application, please contact your distributor or NeoTech Aqua Solutions directly.

SYSTEM COMPONENTS

The NTAS Series 3 systems are comprised of one to four UV chambers, a control box, and the cables necessary to connect the chambers to the control box.

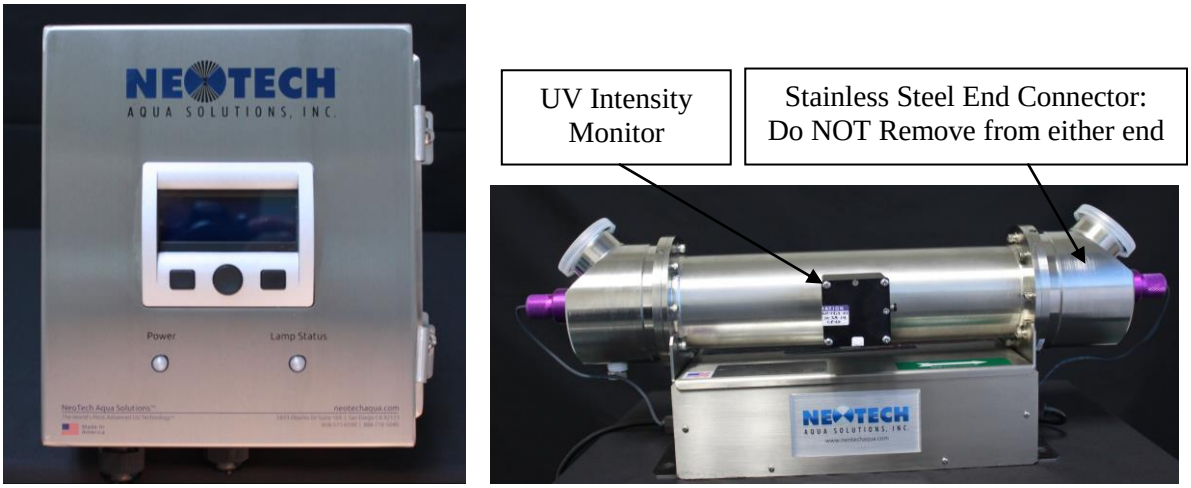

Fig. 1

Fig. 1: Multi-chamber UVS Control Unit (left) and UV Chamber (right) with UV Intensity Monitor (UVIM) installed. Ballast cables and UV Intensity Monitor cables not shown.

NOTICE: Removal of stainless steel End Connectors will void warranty.

SAFETY PRECAUTIONS

WARNING

This product contains a chemical known by the State of California to cause birth defects or other reproductive harm.

WARNING - to guard against injury, basic safety precautions should be observed, including the following:

READ AND FOLLOW ALL SAFETY INSTRUCTIONS.

1. **Do NOT loosen or remove bolts that connect End Connectors to chamber tube.** Doing so will void warranty. These bolts have a specific torque rating and there are no user serviceable components that require loosening or removal of End Connectors.
2. ***Caution!*** Disconnect power before servicing. If unit is hardwired, use appropriate lockout/tagout procedure to ensure power is removed from the unit before servicing.
3. ***DANGER!*** To avoid possible electric shock, special care should be taken since water is present near electrical equipment. Unless a situation is encountered that is explicitly addressed by the provided maintenance and troubleshooting sections, do not attempt repairs yourself; refer to an authorized service facility.
4. Carefully examine the unit after installation. Power should not be applied to the unit if there is water inside the control box or the ballast box (underneath the UV chamber)
5. Do not operate the unit if it has a damaged power cable or plug, if it is malfunctioning or if it has been dropped or damaged in any manner.
6. ONLY operate unit when chamber is completely filled with water.
7. Always disconnect water flow and remove power from the unit before performing any cleaning or maintenance activities. If the unit is hardwired, use appropriate lockout/tagout procedure to ensure power is removed from the unit before servicing. If the unit is powered from a wall plug, never yank the cord to remove from an outlet; grasp the wall plug and pull to disconnect.
8. Do not use this unit for any purpose other than the intended use. The use of attachments not recommended or sold by the manufacturer / distributor may cause an unsafe condition.
9. The treatment chamber has been designed to meet NEMA 12 or IP53 (protected from non-direct spray) environments, while the control box has a NEMA4X or IP67 rating. Do not install this unit where it will be exposed to the weather or to temperatures below freezing. Do not store this unit where it will be exposed to the weather. Do not store this unit where it will be exposed to temperatures below freezing unless all water has been drained from it and the water supply has been disconnected.
10. Read and observe important notices and warnings on all components of the unit.
11. If an extension cord is necessary, a cord with a proper rating should be used. A cord rated for less Amperes or Watts than the disinfection system rating may overheat. Care should be taken to arrange the cord so that it will not be tripped over or pulled.
12. **SAVE THESE INSTRUCTIONS.**

Warning: The UV light given off by this unit can cause serious burns to unprotected eyes and skin. Never look directly at an illuminated UV lamp. When performing any work on the UV disinfection system always unplug the unit first. Never operate the UV system while the UV lamp is outside of the UV chamber.

WATER QUALITY

The quality of the water entering any UV water purification system will significantly impact that system's effectiveness and operation. The following levels are recommended for your UV system:

UV Transmittance	**> 95% (call factory for recommendations on applications where UVT < 95%)**
Iron	**< 0.3 ppm (0.3 mg/L)**
Hardness*	**< 7 gpg (120 mg/L)**
Turbidity	**< 1 NTU**
Manganese	**< 0.05 ppm (0.05 mg/L)**
Tannins	**< 0.1 ppm (0.1 mg/L)**
pH	**6.5 – 9.5**
Suspended Solids	**< 10 ppm (10 mg/L)**
Water Temperature	**2 °C (35 °F) – 27°C (80 °F) operational, 2 °C (35 °F) – 40 °C (104 °F) maximum**

*Where total hardness is less than 7 gpg, the UV unit should operate efficiently provided the quartz sleeve is cleaned periodically. If total hardness exceeds 7 gpg, the water should be softened.

If your water contains levels in excess of those mentioned above, proper pre-treatment is recommended to correct these water problems prior to the installation of your UV treatment system. These water quality parameters can be tested by your local distributor, or they can recommend a private analytical laboratory. Your local distributor can also recommend the necessary pre-treatment equipment.

In some cases, de-rating may be able to compensate for non-ideal water conditions.

Water quality factors

For any UV purification system, the dose delivered to the water is defined by the following equation:

$$\text{Dose [mJ/cm}^2\text{ or microwatt-seconds/cm}^2\text{]} = \text{Intensity [mW/cm}^2\text{]} \times \text{Residence time [s]}$$

The residence time is determined by the flow rate and the flow dynamics in the UV chamber, and is a fixed value at a given flow rate.

The intensity is determined by a number of factors, including water based factors such as: suspended solids, level of dissolved organics, chlorine, other chemicals, and total hardness of the water. These can all be mitigated by treatment of the water upstream as required. Other factors affecting intensity include the cleanliness of the chamber and the aging of the lamp and sleeve within the chamber.

NSF CERTIFICATION

Series 3 Products have met the requirements of NSF 50, Annex H.1: Disinfection Efficacy for the ≥ 3 log reduction of Enterococcus faecium [ATCC #6569] and Pseudomonas aeruginosa [ATCC #27313]. The products are intended for supplemental disinfection and should be used with registered, or approved disinfection chemicals to impart residual concentrations in accordance with state and local regulations. Except for model D438, these products have not been evaluated to the Cryptosporidium inactivation requirements of NSF/ANSI 50.

The D438 has met the NSF/ANSI Standard 50 3-log (or better) Cryptosporidium inactivation requirements under the following conditions:

- Maximum flow rate of 150gpm at ≥ 91%-96% UVT, when the sensor reading is ≥ 7.6 mW/cm^2.
- Maximum flow rate of 251gpm at ≥ 95%-96% UVT, when the sensor reading is ≥ 10.0 mW/cm^2.
- Maximum flow rate of 470gpm at ≥ 96%-98% UVT, when the sensor reading is ≥ 12.5 mW/cm^2.
- Maximum flow rate of 500gpm at ≥ 90%-98% UVT, when the sensor reading is ≥ 12.4 mW/cm^2.

INSTALLATION

The system comes complete with all of the equipment required to begin treating your water. Installer is responsible for providing the necessary clamps, seals and fittings required to connect the UV chamber to the rest of the plumbing.

Unpacking

Tools required:

Box Knife

Inspect the packaging for damage before unpacking and note any issues on the shipper. Open the shipping container by cutting the tape with the box knife. Inspect the UV chamber and the control box for any damage incurred during shipping. Report any issues to your distributor, or NTAS. Remove the UV chamber and control box from the shipping container. A CD copy of the manual is included.

Unit Mounting

⚠ ***Caution!*** If the treatment chamber for the unit being installed has a mass greater than 55 lb (25 kg) (refer to the tables in Appendix A – Mounting Information), the treatment chamber should be lifted by two people or by using lifting equipment. If a lifting sling is used, the sling should be positioned under both end connectors to ensure that the load is balanced.

The unit is designed to be mounted in a horizontal position with the water ports pointing upward. If necessary, the unit can be mounted vertically if proper mounting procedures are followed. Specifically, the flow direction through a vertical chamber must be upward to prevent air bubbles and to ensure that the UV lamp is oriented properly. Place the units in their desired locations and check to make sure the power cable can reach an outlet and that the UV Intensity Monitor and ballast cables will reach from the control box to the UV chamber. If longer cables are required please contact your distributor, or NTAS.

IMPORTANT:
Allow clearance on at least one end of the UV unit to allow for lamp and lamp sleeve changes. Use the following table to determine the proper clearance for your particular unit:

Model	Clearance Required for Lamp Change
D222, T222, D322	22"
D228, T228, D328, D428	28"
D238, T238, D338, D438	38"

Limit the mechanical load on the water ports of the units to <25 lbs (11.3 kg). Locate the unit where it will not be exposed to excessive shock or vibration, or physical abuse. It is recommended to include valves on either end for ease of service, and a drain which is lower than the unit. If the unit is to be installed outdoors, it is preferable to locate it under a cover.

Mount the control box and the UV chamber(s) (see Appendix A for the mounting patterns). Note that there are portions of both the UV chamber and the control box which extend beyond the mounting patterns shown. If the unit is powered from a wall socket, the plug must be accessible so that power may be removed in an emergency. If the unit is hard wired to the power source, appropriate circuit breakers or disconnects must be included in the circuit.

If the UV system is to be mounted vertically, it is recommended to place the input at the bottom. This will reduce the potential for air bubbles and improve meter readings.

Water Connections

The system is designed to accept 1.5 in., 2 in., or 3 in. sanitary fittings depending on the model, unless one of the other, optional connection types was ordered. There is a specific inlet and outlet on the unit. Be sure to install with the arrows in the direction of flow to ensure proper performance of the system.

For installations with plastic plumbing (PVC, PVDF, PEX, etc.) adjacent to the UV unit it is important to install at least one (1) 90 degree metal elbow on each port between the UV unit and any plastic components. This is to create a “light-trap” and protect against damage due to residual UV light that will degrade plastic piping.

Be sure to install any required pretreatment equipment and to perform any adjustment or flushing of the system prior to installing your UV system.

Connect the inlet water and outlet water lines to the UV chambers. Fill the chamber with water. Circulate enough water through the system to remove any trapped air bubbles from the system prior to operating the unit.

Standard fittings to convert from sanitary to NPT or flange are available. Please consult the factory if assistance is needed.

IMPORTANT: Reactor chamber must be filled with water before plugging-in unit.

Electrical Connections

To finish the installation, complete the electrical connections. Electrical connections should be made only by an electrician or other personnel trained and competent in electrical installation.

Caution! Do not connect the input power (or plug unit in) until other connections are made.

Caution! Input power connection must be made in such a way that disconnection of power is easily recognized and accomplished.

Caution! Do not connect the input power (or plug unit in) until chamber is filled with water.

The cable(s) for the UV Intensity Monitor (UVIM) is/are attached to the Control Unit. Connect the loose end of each UVIM cable to the UV Intensity Monitor on each corresponding UV chamber, using the "plug-and-screw" circular connector. (see Fig. 2). Be sure to properly align the pins on the UVIM with the appropriate sockets in the UVIM Cable Connector. Push Connector over pins and screw outer collar to secure.

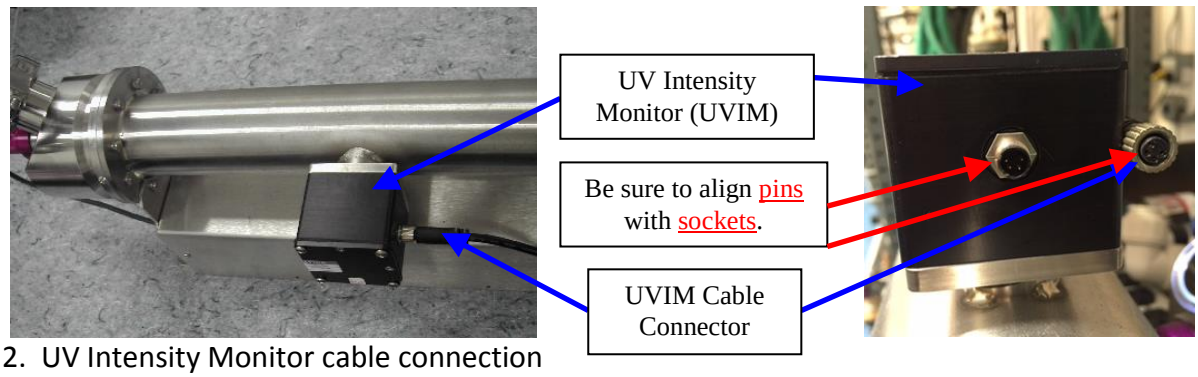

Figure 2. UV Intensity Monitor cable connection

NOTE: Before proceeding, please ensure that the Control Box is disconnected from the power source.

Next, connect the loose end of the Ballast Cables on the Treatment Chambers to the Control Unit. The end of the Ballast Cable that connects to the UV chamber has been installed at the factory. Pass the loose end(s) through the watertight feed-through receptacle(s) on the bottom of the Control Unit (see Fig. 3).

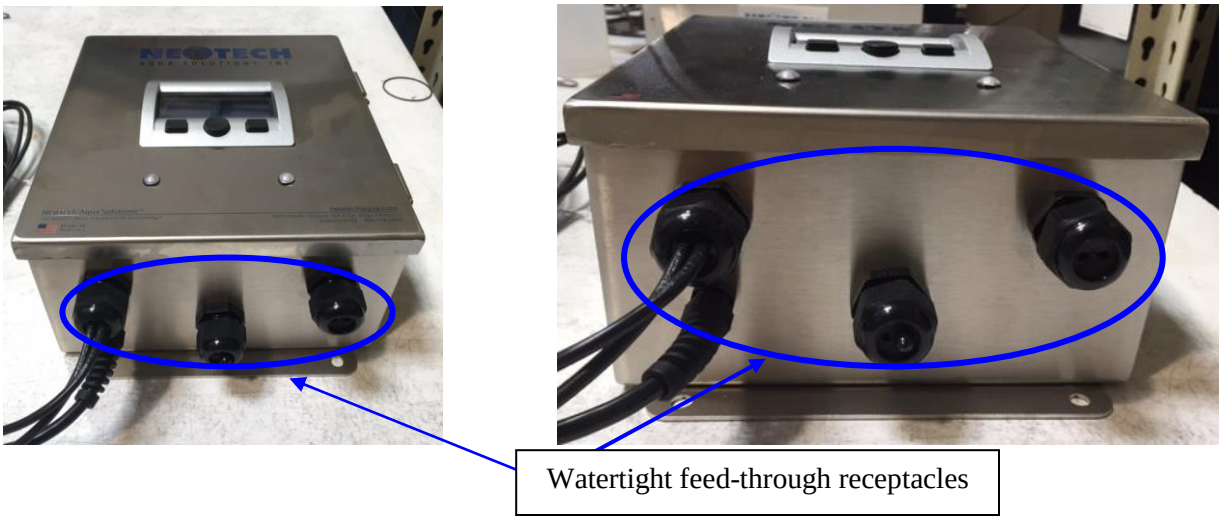

Figure 3. Location of Control Unit Feed-Through Receptacles

Ballast Cable Connection(s)

NOTE: Before proceeding, please ensure that the Control Box is disconnected from the power source.

Connect the wires from the Ballast Cable(s) to the Terminal Block J3 on the Control Unit Power Board. Terminal Block J3 shown in Fig. 4. There will be one Ballast Cable containing three (3) wires ({white, black, and green or green/yellow} or {blue, brown, green, yellow}) for each UV Chamber.

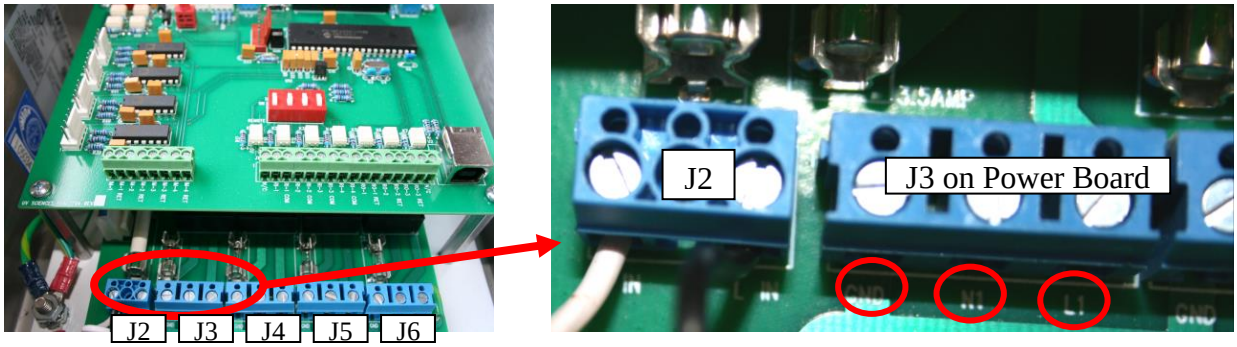

Figure 4. Location of input and ballast power cable connections inside control box.

The 120/230 VAC Hot (black or brown) wire of the Ballast Cable for UV chamber #1 should be connected to terminal J3-L1. The Neutral (white or blue) wire should be connected to terminal J3-N1, and the Ground (green or green/yellow) wire should be connected to J3-GND.

Tighten the feed-through nut on the bottom of the control box for this ballast power cable after the connections have been made. The Ballast Cables for UV Chambers #2, #3, and #4 are made in the same manner to terminal blocks J4, J5, and J6 respectively, which are lined up from left to right immediately next to J3 (refer to left picture in Fig. 4).

NOTE regarding Re-inserting Wires into Terminal Block Locations:

When re-inserting wires into a previously used terminal location it may be necessary to first push up the Locking Plate inside the terminal. The Locking Plate is a small plate that will compress the wire when the terminal screw is tightened. If a terminal screw is loosened and the wire is removed from a terminal location, the Locking Plate will typically stay in the "down" position. Therefore, when replacing a wire into a previously used terminal location, it may be necessary to first insert a small probe and "pop" the Locking Plate back to the "up" position (be sure to first loosen the terminal screw to the point that the head of the screw is flush with the top of the terminal block).

If the Locking Plate is in the "down" position it will be difficult to properly insert a wire under the Locking Plate. A wire can be properly secured ONLY if it is inserted through the hole and under the Locking Plate. Maximum torque on terminal block screws is 0.5 Nm (Newton meters) or 4.4 in. lbs.

External Interface Connections

NOTE: Before proceeding, please ensure that the Control Box is disconnected from the power source.

The following instructions are for connecting an External Controller or PLC to the remote monitoring and control interface of the UV system. The system can be operated entirely from the front panel of the Control Unit, the interface in this section allows the user to operate the system remotely. Connections should be made with multi-wire, twisted pair shielded cables. The number of pairs per cable and the number of cables will depend on the number of units being connected and the number of features that are required. For each UV chamber one (1) pair of wires will be required for the associated 4-20mA signal for each UV Intensity Monitor and one (1) pair is required for the Remote Start/Stop feature. Regardless of the number of chambers being operated, three (3) pairs of wires are required for the Alarm Signals. The maximum number of pairs that can be combined in a single cable will be dependent on the thickness of the cable. The maximum thickness of cable that will fit through the cable feed-throughs is 0.26" (6.5mm). The cable should have conductors in the range of 20 – 28 AWG. See Figure 5 for the location of the External Interface Terminal Blocks J17 and J3 on the Control Board. The cable feed-through(s) on the bottom of the Control Unit are shown in Fig. 3.

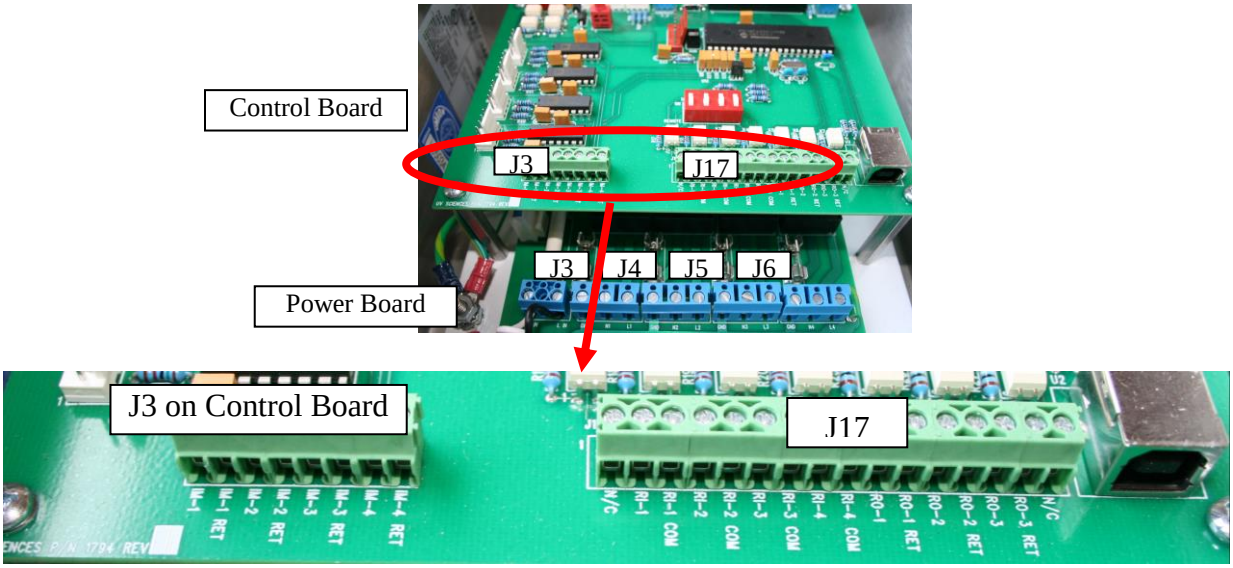

Figure 5. Location of External Interface Connections inside Control Unit.

NOTE regarding Re-inserting Wires into Terminal Block Locations:

When re-inserting wires into a previously used terminal location it may be necessary to first push up the Locking Plate inside the terminal. The Locking Plate is a small plate that will compress the wire when the terminal screw is tightened. If a terminal screw is loosened and the wire is removed from a terminal location, the Locking Plate will typically stay in the "down" position. Therefore, when replacing a wire into a previously used terminal location, it may be necessary to first insert a small probe and "pop" the Locking Plate back to the "up" position (be sure to first loosen the terminal screw to the point that the head of the screw is flush with the top of the terminal block).

If the Locking Plate is in the "down" position it will be difficult to properly insert a wire under the Locking Plate. A wire can be properly secured ONLY if it is inserted through the hole and under the Locking Plate. Maximum torque on terminal block screws is 0.5 Nm (Newton meters) or 4.4 in. lbs.

Remote Run/Stop

NOTE: Before proceeding, please ensure that the Control Box is disconnected from the power source.

The Control Unit has a feature which allows each UV chamber to be operated either remotely or locally, and independently from the other chambers. Any of the four units can be operated in either mode, regardless of the modes selected for the other chambers. In the local mode, the chambers turn on automatically when the unit is powered-up, subject to the initial power-up settings for the system. A chamber in Local Mode can be turned on or off only by using the Control Unit display screen and user interface Control Buttons (see the Operation section). A chamber in Remote Mode can be turned on and off by applying 24VDC across the appropriate terminals on J17, after the Control Unit has been set-up for remote control of this chamber.

Setting a chamber to the Remote Mode requires two operations. First, the appropriate DIP switch on S2 should be set to "REMOTE" as indicated by the silk screen on the circuit board. S2 is the red four position DIP switch near the center of the control board (See Fig. 6). Next, the chamber must be turned-on using the Control Unit interactive display menu (see the Setup Main Menu Item section in the Operation potion of this manual). The Remote Control Inputs for each of the four chambers (RI-1, RI-2, RI-3, and RI-4) and their common (return) connections are on the left side of J17, as shown in Fig. 6.

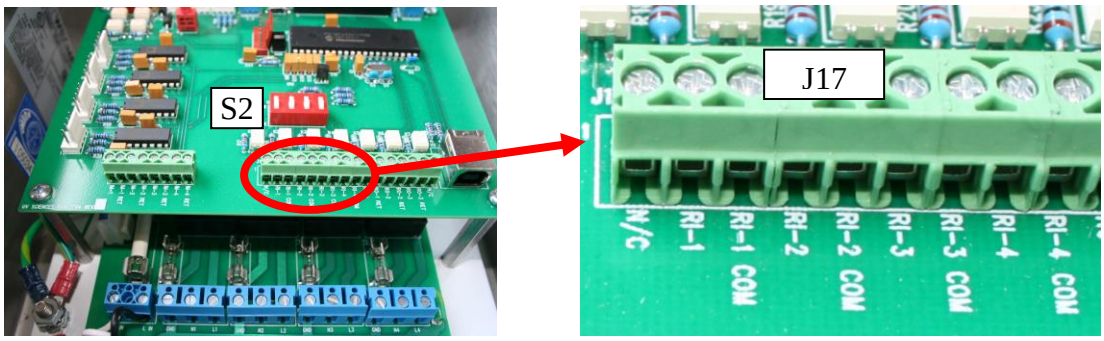

Figure 6. Close-up of Remote Run/Stop terminals.

NOTE: Once the control box is configured for a particular chamber to be operated remotely, the 24VDC signal **must** be applied across the appropriate RI terminal pair for that chamber to operate. If this signal is lost, even momentarily, the lamp will shut-down, and may need to be warmed-up again to achieve the full UV output. See the Operation section for details about lamp warm-up time. To return a chamber to local control, change the corresponding DIP switch on S2 from REMOTE to ON.

NOTE regarding Re-inserting Wires into Terminal Block Locations:

When re-inserting wires into a previously used terminal location it may be necessary to first push up the Locking Plate inside the terminal. The Locking Plate is a small plate that will compress the wire when the terminal screw is tightened. If a terminal screw is loosened, the Locking Plate will typically stay in the "down" position. Therefore, when replacing a wire into a previously used terminal location, it may be necessary to first insert a small probe and "pop" the Locking Plate back to the "up" position (be sure to first loosen the terminal screw to the point that the head of the screw is flush with the top of the terminal block). A wire can be properly secured ONLY if it is inserted through the hole and under the Locking Plate. Maximum torque on terminal block screws is 0.5 Nm (Newton meters) or 4.4 in. lbs.

Remote UV Intensity Monitor

NOTE: Before proceeding, please ensure that the Control Box is disconnected from the power source.

This is a user interface that provides a signal proportional to the UV Intensity output on the front panel of the Control Box. The signal can be used to remotely monitor the UV output of each individual chamber. The signal is an internally sourced 4-20 mA signal available from a terminal block inside the Control Unit. Each chamber has a separate signal. Note: Since this signal is internally sourced, the 4-20 mA receiver at any External Control should be isolated from local ground to prevent ground loops.

The remote signals for the UV Intensity Monitors are located on J3, which is the terminal block on the left in Fig. 7.

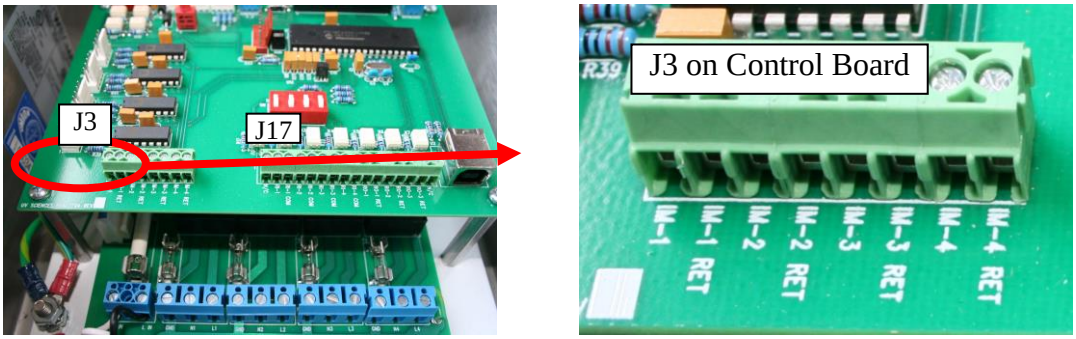

Figure 7. Close-up of UV Intensity Monitor remote output terminals.

To access the 4-20 mA signal corresponding to UV chamber #1, connect the signal wires to terminals J3-IM-1 and J3-IM-1 RET. Chambers #2, #3, and #4 are connected in a similar manner. The irradiance E (or dose rate) measured by the UV Intensity Monitor is calculated from the measured current signal using the following equation:

$$E\ [mW/cm2] = \mathbf{10} \times (I\ [mA] - 4\ mA)$$

NOTE regarding Re-inserting Wires into Terminal Block Locations:

When re-inserting wires into a previously used terminal location it may be necessary to first push up the Locking Plate inside the terminal. The Locking Plate is a small plate that will compress the wire when the terminal screw is tightened. If a terminal screw is loosened and the wire is removed from a terminal location, the Locking Plate will typically stay in the "down" position. Therefore, when replacing a wire into a previously used terminal location, it may be necessary to first insert a small probe and "pop" the Locking Plate back to the "up" position (be sure to first loosen the terminal screw to the point that the head of the screw is flush with the top of the terminal block).

If the Locking Plate is in the "down" position it will be difficult to properly insert a wire under the Locking Plate. A wire can be properly secured ONLY if it is inserted through the hole and under the Locking Plate.

Maximum torque on terminal block screws is 0.5 Nm (Newton meters) or 4.4 in. lbs.

Remote Fault Indicator

The Control Unit provides three dry contact closure lines which provide a binary fault code to indicate the presence of one or more fault conditions. Table 1. below summarizes the fault conditions this output will indicate.

Indication	Binary Value	RO1	RO2	RO3	Notes
General System Fault	0	0	0	0	Indicates power out, microprocessor failure, main fuse blown, or control box power supply failure
Lamp 1 Fault	1	0	0	1	Indicates Chamber 1 has a UVIM output lower than the alarm setpoint. This will be accompanied by a red "Lamp Status" light on the control box front panel. Normally this indicates a lamp failure or lamp which has reached end of life.
Lamp 2 Fault	2	0	1	0	Indicates Chamber 2 has a UVIM output lower than the alarm setpoint. This will be accompanied by a red "Lamp Status" light on the control box front panel. Normally this indicates a lamp failure or lamp which has reached end of life.
Lamp 3 Fault	3	0	1	1	Indicates Chamber 3 has a UVIM output lower than the alarm setpoint. This will be accompanied by a red "Lamp Status" light on the control box front panel. Normally this indicates a lamp failure or lamp which has reached end of life.
Lamp 4 Fault	4	1	0	0	Indicates Chamber 4 has a UVIM output lower than the alarm setpoint. This will be accompanied by a red "Lamp Status" light on the control box front panel. Normally this indicates a lamp failure or lamp which has reached end of life.
Spare	5	1	0	1	
Low Lamp Output Warning	6	1	1	0	Indicates that one or more chamber has a UVIM output within 2 mW/cm^2 of its alarm setpoint. This will be accompanied by a flashing green "Lamp Status" light on the control box front panel. Check the control box front panel to determine which lamp is low in a multiple chamber configuration.
No Faults/Warnings	7	1	1	1	

Table 1. Fault Codes (1 = closed contact, 0 = open contact)

The fault condition will appear if any one of the above faults occurs. The fault will not clear until all faults have cleared, unless otherwise indicated above. Only the first fault of multiple faults will be indicated. The fault indicator is only an indicator. Any action needed as a result of these faults must be taken by the operator or the External Control computer.

The Lamp X fault indicators are driven by the same signal as the lamp status indicators on the front panel display of the Control Unit. If one of these is the fault indicated, the operator will be able to make that determination by looking at the front panel display of the Control Unit.

The Remote Fault Code signals are located on the right side of J17, as shown in Fig. 8. To access the three contact closure binary signals, connect pairs of wires to each of the three pairs of terminals: J17-RO-1 and J17-RO-1 RET, J17-RO-2 and J17-RO-2 RET, and J17-RO-3 and J17-RO-3 RET. The fault signal code is located in Table 1. above.

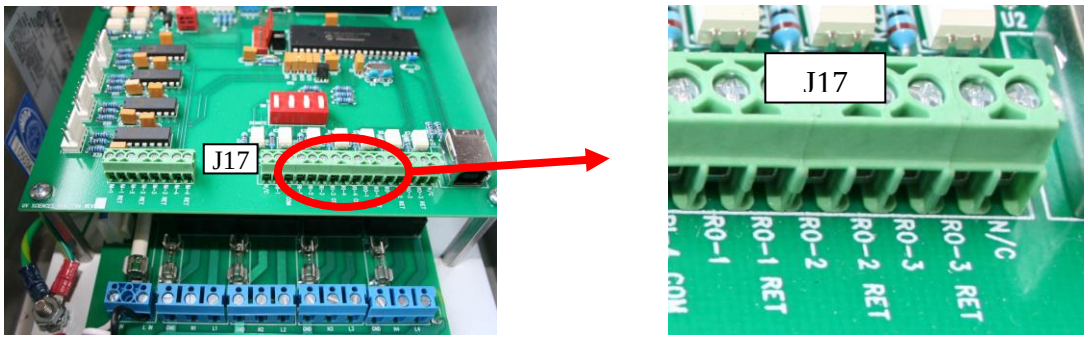

Figure 8. Close-up of Fault Output signal terminals.

OPERATION

Once installed and connected according to the instructions above, the unit is ready for operation.

NOTE: The lamp can take up to 15 minutes to warm up and achieve its full UV output. The chambers MUST be filled with water during the lamp warm-up process. It is not necessary to flow water through the unit while it is warming up, but the chambers must be filled with water.

NOTE: For a new unit, or after a period of more than a few days of storage or non-use, the UV Intensity Monitor may require up to 10 hours of continuous operation before its output stabilizes.

NOTE: Frequent power cycling (more than 1 times per day) can lead to premature lamp or ballast failure. Cycling the power more than 1X per day will void the lamp warranty.

1. Fill the chambers with water. Chambers MUST be filled with water before unit is plugged-in and/or turned on. Once the unit is warmed up, water should flow continuously to achieve optimum performance. The water temperature must not exceed 176° F (80° C) at any time, or damage to the UV lamp may result.

2. Maximum water pressure is 150 psi. This limit must not be exceeded, even for brief periods. Care must be taken to prevent "water hammer" and other pressure surges. After the chambers are filled with water, apply 120/230 VAC power to the control box. To do this, simply plug-in the Control Unit. When power is supplied to the control box, the front panel display will first display a welcome screen, followed by a status measurement for each of the chambers that have been turned on. The display panel has three buttons below the display. The functions for each of these buttons are defined in the display row above them. For example, in this screen, the middle button accesses the main control Menu. The left and right buttons are inactive in this screen, and therefore, do not have any action shown above them.

3. If the Remote Run/Stop option has not been selected for the unit, power will be sent to the chamber(s) immediately (assuming the chambers have been preset to be ON at the factory). If the Remote Run/Stop option has been selected for a chamber, the +24VDC signal must be applied to appropriate J17 terminals in the Control Unit to power-on a specific chamber.

4. Once power is applied and the appropriate Remote Run/Stop signals are present, the chamber is operational and no further action by the operator is required. However, there is a significant amount of operational and status information, as well as control functionality, available from the front display panel. These functions are detailed in the section below.

5. Keeping an Operation and Maintenance Log for the system is recommended, see page 35.

Setting System Parameters in the Control Box

The next step is to set up the unit via the front panel of the Control Box. Below is a diagram of the display screen structure.

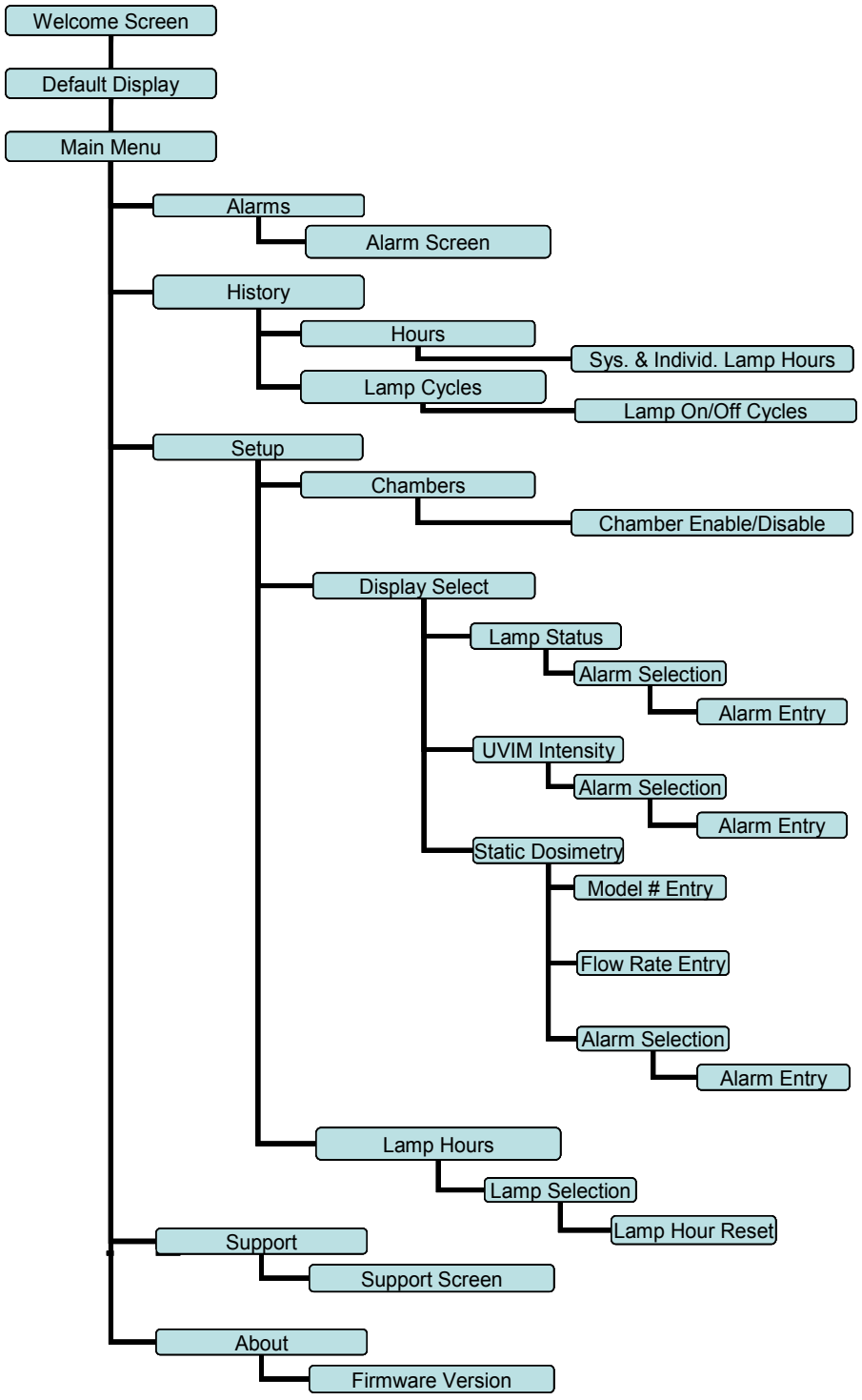

Figure 9. Flow chart for display menu.

This section provides examples of all the accessible display screens, and describes actions that can be taken and/or what information is available on each screen. When power is applied to the system, an initial welcome screen is displayed.

Note: Firmware refers to former company name.

After a few seconds, the display changes to the System Status Screen. The contents of this display are determined by the choice of monitoring mode. The three possible screens are shown below. The steps to set up the system are the same regardless of the initial monitoring mode.

Each display screen shows the readings of up to four treatment chambers in either the Lamp Status, the UV Intensity, or the Dosimetry mode. These modes provide the primary diagnostics for determining the status of the system.

To set up the system, begin by pressing the middle button below the screen (the button directly beneath MENU on the bottom of the display. This brings up the Main Menu screen shown below.

The Main Menu screen is the gateway to accessing all of the functions and information available from the Control Unit. Note the three buttons now each have a function listed above them (SCROLL, SELECT, EXIT). These three "soft keys" appear repeatedly when navigating through the controls. SCROLL moves the arrow pointer (currently pointing to Alarms) sequentially to each item in the current menu. SELECT "drills down" to the first sub-menu beneath the menu item indicated, and EXIT returns the display to the previous screen.

In this section, we will begin with the Main Menu and work through each sub-screen of a particular Main Menu item, and then move on to the next Main Menu item until all screens have been described.

“Alarms” Main Menu:

Selecting the Alarms menu brings up the following screen if no alarms are present:

If, for example, Lamp 1 and 2 are out of range, the alarm screen will look like this if the Display Screen is set to Lamp Status or UV Intensity mode:

If the Display Screen is set to Dosimetry mode and if Lamp 1 and 2 are out of range, the alarm screen will look like this:

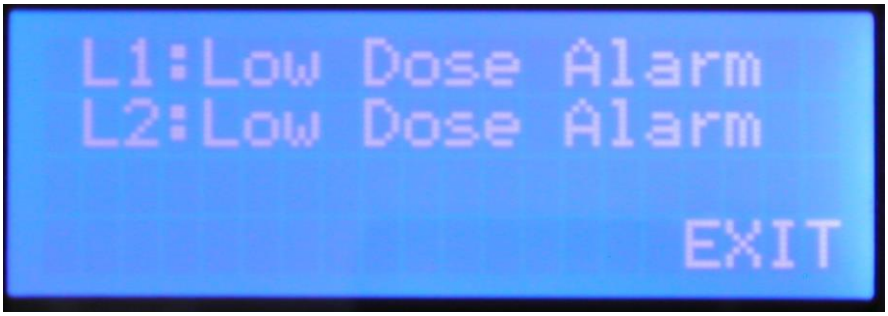

Note: The “Lamp” LED on the front of the control box will flash green if the UV Intensity is within 2 mW/cm^2 of the alarm setpoint in Lamp Status or UV Intensity mode or if the UV Dose is within 5% of the alarm set-point in Dosimetry Mode.

“History” Main Menu Item:

Selecting the History menu item brings up operational history of the system and the individual treatment chamber lamps.

Selecting the History Menu Item opens the following sub-menu:

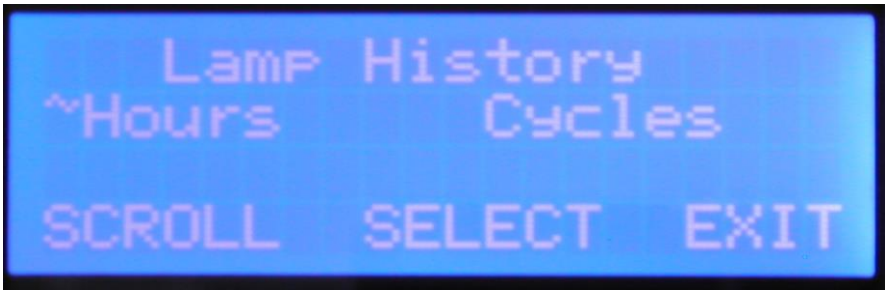

Selecting the Hours sub-menu brings up the following screen:

This screen shows the system total operational hours (total time the control box has received power), which is non-resettable. It also shows the lamp hours for up to four chambers. These timers are resettable, and should be reset whenever a lamp is changed. The process for doing this is described under the Setup Main Menu Item. Pressing the right button (under “EXIT”) returns the display to the Main Menu.

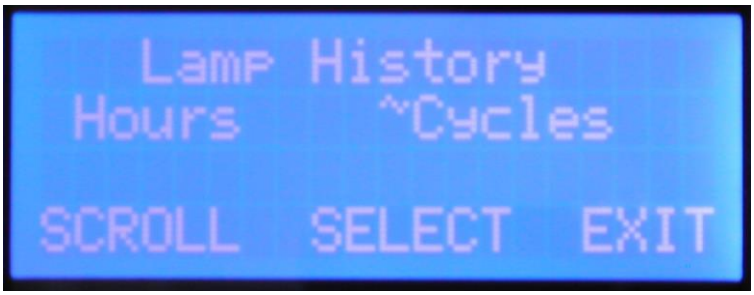

Selecting the Lamp Cycles sub-menu item displays the number of times each lamp has been powered up.

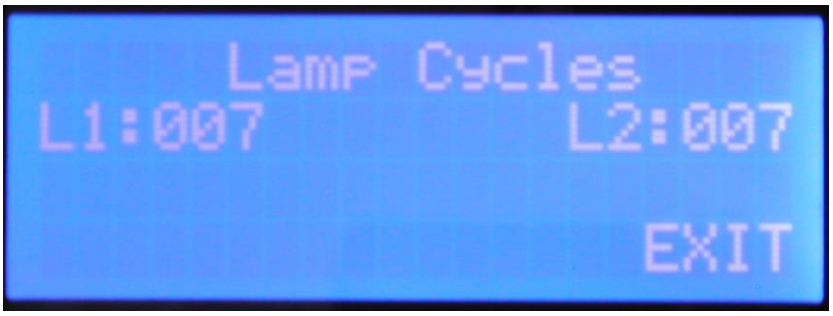

This number is reset when the Lamp Hours monitor is reset (see the Main Menu\Setup\Lamp Hours menu below).

“Setup” Main Menu Item:

The Setup Main Menu Item is used to make changes to the setup of the system (adding or disabling chambers, changing the display mode, etc.) and resetting diagnostics (lamp hours, alarms, etc.).

Main\Setup\Chambers

Selecting the Setup Main Menu Item will open the Setup Sub-Menu window below.

Selecting the **“Chambers”** sub-menu displays the following screen:

In this screen, a particular chamber can be turned on or off by pressing the middle button (“CHANGE”). Pressing the “CHANGE” button will toggle the chamber status of the chamber with the pointer. Note that the system will be preset at the factory with the number of chambers set to “ON” matching the number of chambers initially delivered with the control box.

NOTE: No changes will become active until the “OK” soft button is pressed. Pressing the “OK” button will also return the display to the Setup Sub-Menu window.

Main\Setup\Disp Sel

Selecting the **"Disp Sel"** (Display Select) sub-menu displays one of the following three screens.

NOTE: Selecting one of these screens disables any alarm limits or other parameters entered for any of the other screens. Only those parameters entered under the active screen will be used by the system.

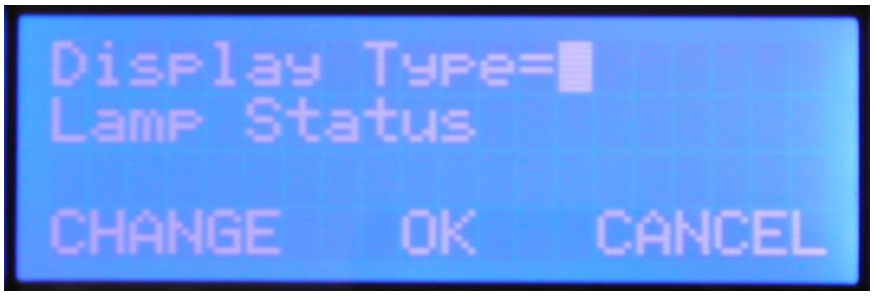

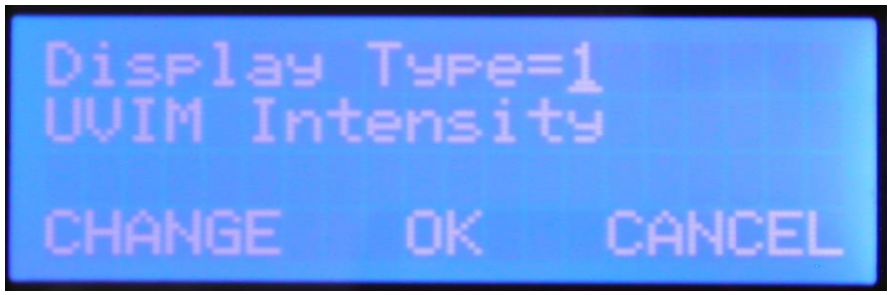

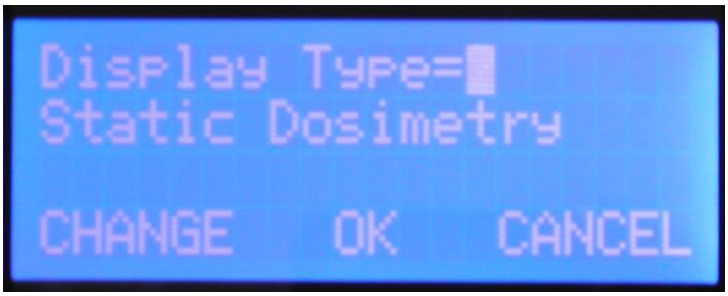

The screen which is currently selected is the one which comes up first. To change to one of the other screens, press the CHANGE button until the desired display appears, then press OK. Descriptions of the three screens are shown below.

Main\Setup\Disp Sel\Lamp Status

The “Lamp Status” screen is the simplest display, and is the default setting for the unit. It only indicates (based on the UV Intensity Alarm setting(s)) whether the individual chambers are operating above that alarm setpoint (left), or if the lamp should be replaced (right).

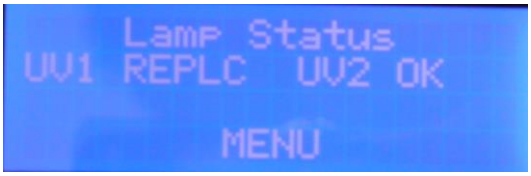

Any alarm in any mode is indicated by a red Lamp Status LED on the Control Box front panel. When a red LED appears, the specific chamber having an issue can be determined from the Alarms sub-menu item or via the remote output fault code.

When the “Lamp Status” display mode is selected by toggling the CHANGE button until that mode is displayed, then pressing OK as described above,

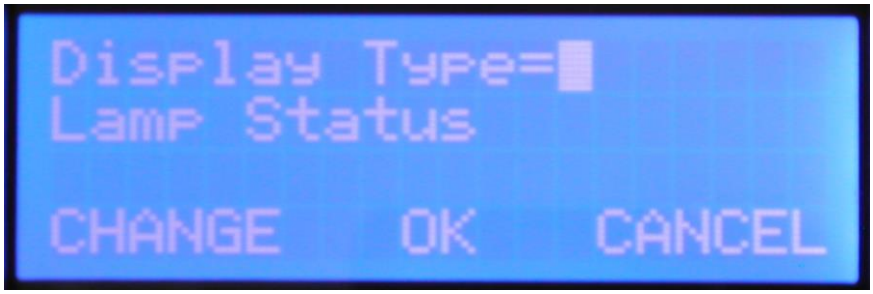

The next screen which appears is the Alarm Selection screen.

From the Alarms sub-menu screen, the threshold UV intensity reading for triggering an alarm can be set or adjusted. The monitor desired is selected by pressing the “SCROLL” button to move the pointer, then pressing the “SELECT” button to enter the window where the setting is changed. This window for “A1” above, is shown below.

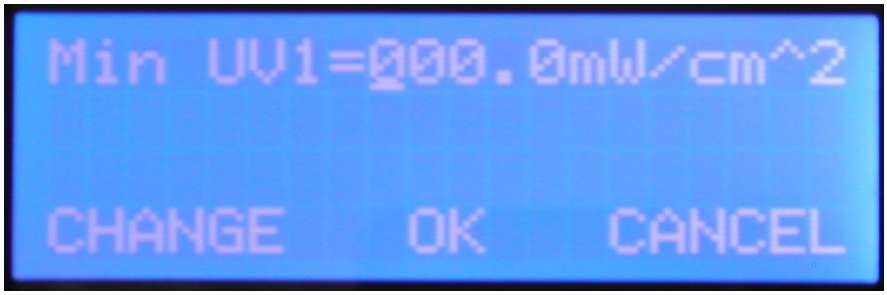

Pressing the "CHANGE" button repeatedly changes the highlighted number to the desired value. Pressing the "OK" button moves the cursor to the right one place, so that the next digit can be changed. When the cursor is on the rightmost digit, pressing "OK" completes the setting and returns the display to the Alarms sub-menu screen above. Pressing "CANCEL" at any time during this process aborts the change and returns the display to the Alarms sub-menu screen above.

Setting the Low UV Output Alarm Setpoint(s) - Background:

The minimum UVIM output required to achieve the design treatment level of 30 mJ/cm^2 at rated flow, is tabulated below.

Unit Name	Minimum UVIM reading [mW/cm^2]	Rated Flow @ 95% UVT [GPM]
D222	22.3	35
D228	13.8	50
D238	11.2	65
D322	8.8	100
D328	9.6	150
D338	10.0	225
D428	7.7	300
D438	9.0	500

The dosimetry formulas below are used to relate the flow rate (GPM), the dosage (mJ/cm^2) and the Ultra Violet Intensity Monitor reading (mW/cm^2) for each treatment chamber size at 95% UVT. The minimum U. V. Intensity Meter reading required to achieve a chosen dose and flow rate is determined by inserting the appropriate "K" Value below into the last Dosimetry Formula.

Formulas:

Flow Rate (GPM) = K * UVIM Reading (mW/cm^2) / Dose (mJ/cm^2)

Dose (mJ/cm^2) = K * UVIM Reading (mW/cm^2) / Flow Rate (GPM)

UVIM Reading (mW/cm^2) = Flow Rate (GPM) * Dose (mJ/cm^2) / K

"K" Values for all Treatment Chamber Models:

D222: K = 47
D228: K = 108
D238: K = 174
D322: K = 342
D328: K = 466
D338: K = 673
D428: K = 1,170
D438: K = 1,666

If the system is set for UVIM Intensity readout (mW/cm^2), it is recommended that the alarms for each chamber be set at the minimum UV reading listed above as a default. This ensures that an adequate dose will be delivered up to the highest allowable flow rate for the particular water condition at that

instant. The UVIM reports the true intensity in the chamber rather than just having an output proportional to the lamp output regardless of the water or chamber conditions. As long as the UVIM reading is above the minimum and the flow rate is at or below the design value, the dose is at or above the desired level, regardless of lamp age or water quality. This is a feature found only in NTAS UV treatment chambers.

NOTE: The same functionality can be obtained by using the Static Dosimetry display mode described below. This feature takes the UVIM Intensity and the estimated flow rate entered by the user to calculate the dose applied to the product. This eliminates the need for using the table above.

NOTE: This unit should be used with in conjunction with a flow meter and associated controls to ensure the maximum rated flow is not exceeded.

Selecting “EXIT” on the Alarms sub-menu screen returns the display to the Setup Sub-Menu screen.

Main\Setup\Disp Sel\Intensity

The Intensity display shows the measured intensity of the UV Intensity Monitor (UVIM) for each chamber independently. The display screen looks like this:

To set the unit to display this screen, press the MENU key, then select the Setup menu. The Setup menu screen will be displayed.

Select the **"Disp Sel"** sub-menu, then press CHANGE repeatedly until the unit has the following display:

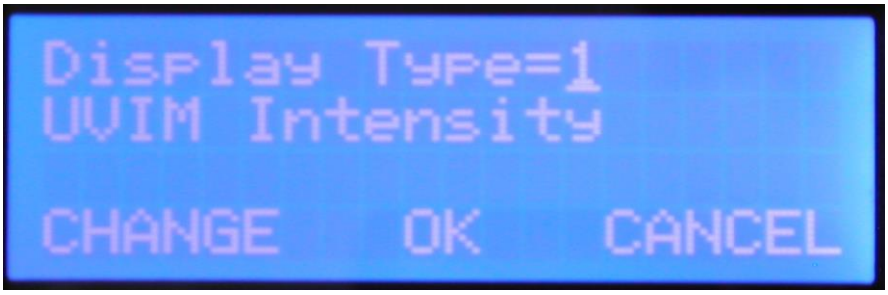

Selecting OK will set the Control Box display mode to display the UVIM Intensity screen, and will bring up the Alarm Entry Screen (this is the same screen as that for the Lamp Status mode):

From the Alarms sub-menu screen, the threshold UV intensity reading for triggering an alarm can be set or adjusted. These values should be set using the same table as in the Lamp Status section above. The default settings are 0.0 for all the UV Intensity alarms.

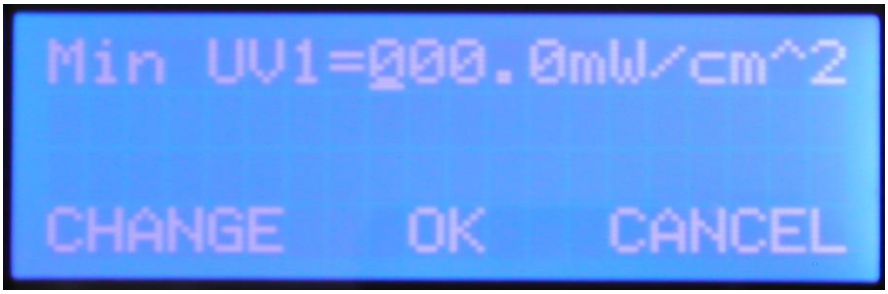

Pressing the "CHANGE" button repeatedly changes the highlighted number to the desired value. Pressing the "OK" button moves the cursor to the right one place, so that the next digit can be changed. When the cursor is on the rightmost digit, pressing "OK" completes the setting and returns the display to the Alarms sub-menu screen above. Pressing "CANCEL" at any time during this process aborts the change and returns the display to the Alarms sub-menu screen above. Press EXIT repeatedly until the UV Intensity screen is shown.

NOTE: The UVIM Intensity readout is limited to about 15% above the alarm setpoint entered. Beyond this, the display will show ">###.#" as shown below, indicating that the dose is well above the alarm point.

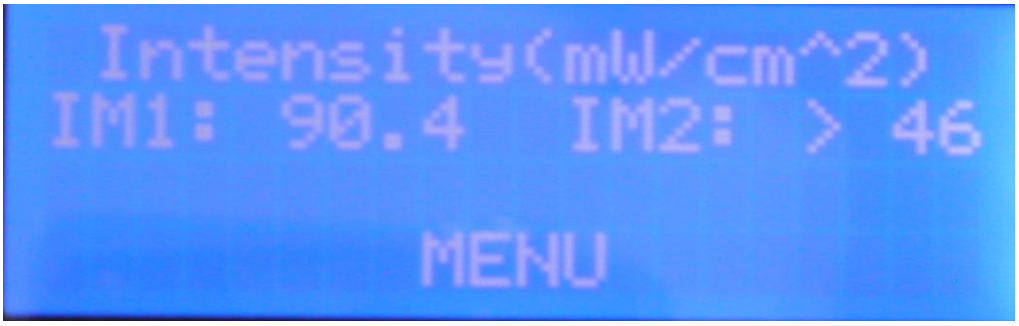

Main\Setup\Disp Sel\Dosimetry

The third option for the Display Screen is the Static Dosimetry screen. Static Dosimetry allows the user to input the flow rate of the system, which is then used to calculate the UV disinfection dose delivered to the water. As noted above for the UVIM Intensity readout, the Dosimetry readout is limited to about 15% above the alarm setpoint entered. Beyond this, the display will show ">###.#" as shown below, indicating that the dose is well above the alarm point.

To set the unit to display this screen, press the MENU key, then select the Setup menu. The Setup menu screen will be displayed.

Select the **"Disp Sel"** sub-menu, then press CHANGE repeatedly until the unit has the following display:

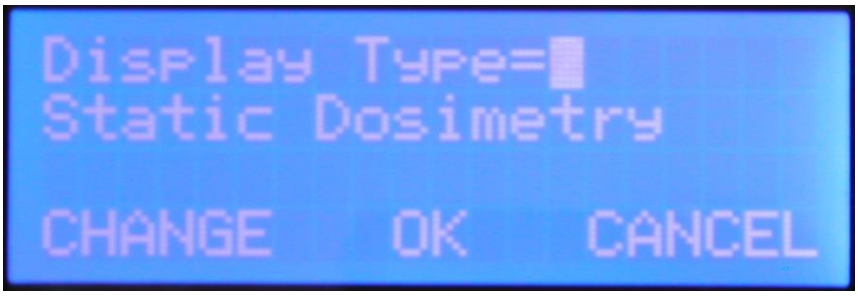

Selecting OK will set the Control Box display mode to display the Dosimetry screen, and will bring up the Static Dosimetry Setup screen.

Main\Setup\Disp Sel\Dosimetry\Model

The Control Box must know which chamber is being driven to provide the proper dose reading. When "**Model**" is selected, the following screen is displayed:

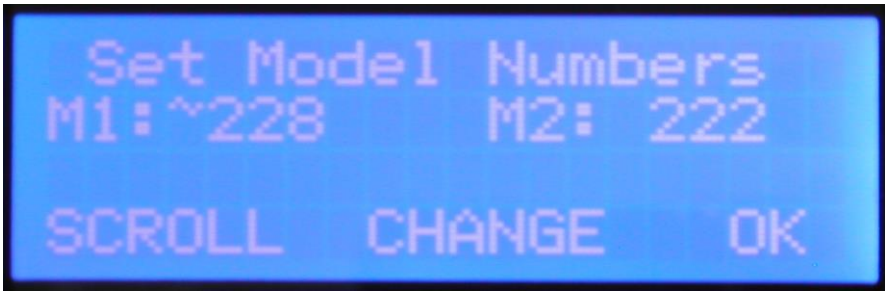

Use the SCROLL and CHANGE keys to select the UV Treatment Chamber model number for each chamber being used, and then press OK. This number is available from the nameplate for the treatment chamber. It is the 3 digit number forming part of the model number – "###". The display will return to the Static Dosimetry setup screen.

Main\Setup\Disp Sel\Dosimetry\Flow Rate

The Control Box must know the flow rate through each chamber to provide the proper dose reading. When "**Flow Rate**" is selected, the following screen is displayed:

Use the CHANGE key to change the highlighted digit, and the OK key to move to the next digit. Set each value to the expected maximum flow rate for each chamber being used, then press OK. The display will return to the Static Dosimetry setup screen.

Main\Setup\Disp Sel\Dosimetry\Alarms

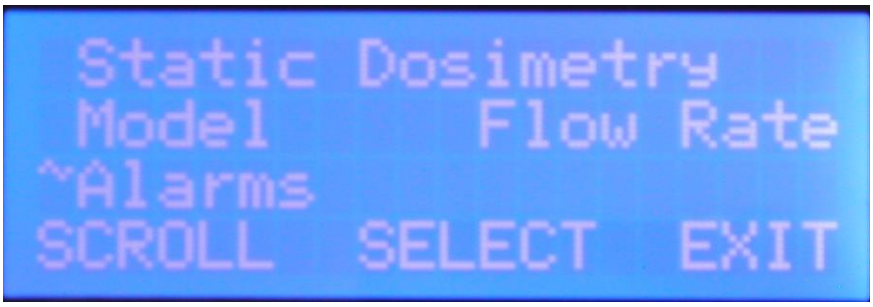

To set the dose alarm(s), use the SCROLL key to Move the indicator to "**Alarms**", then press SELECT. When "**Alarms**" is selected, the following screen is displayed:

Note that this is a different Alarm Entry screen from that used by the other two display options. Select one of the Alarms using the SCROLL key, then press the SELECT key to access the Alarm Entry screen. The default setting is 30.0 mJ/cm^2.

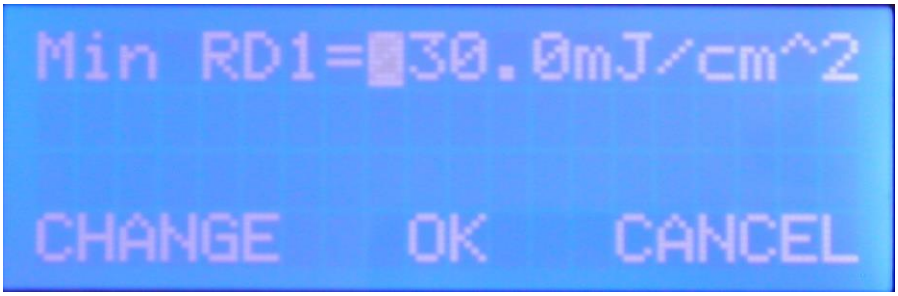

Use the CHANGE key to change the highlighted digit, and the OK key to move to the next digit. Set each value to the desired minimum dose for each chamber being used, then press OK. The display will return to the Static Dosimetry setup screen. Press EXIT repeatedly or wait for the timeout to return to the Main screen.

Main\Setup\Lamp Hrs

Press MENU on the main screen, then select Setup to enter the Setup Menu screen. Select "Lamp Hrs" as shown below to reset the lamp hours when a new lamp is installed.

Selecting “Lamp Hrs” brings up the Lamp Selection screen:

Select one of the Lamps using the SCROLL key, then press the SELECT key to access the Lamp Hour Reset screen.

From this screen, the lamp hours can be reset to zero or the process can be aborted by pressing “CANCEL”. Selecting either button returns the display to the Lamp Hours sub-menu. Pressing “EXIT” in the Lamp Hours returns the display to the Lamp Hours screen.

“Support” Main Menu Item:

Selecting the Support Main Menu Item displays the contact information to obtain support for the system.

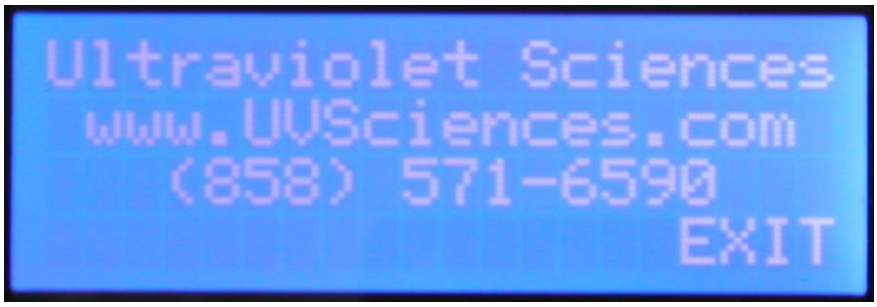

Note: Firmware refers to former company name.

“About” Main Menu Item:

The final Main Menu item is the About screen

Selecting the About Sub-Menu displays the firmware part number and version.

Note: Firmware refers to former company name.

This information may be needed to determine if any system upgrades or updates are required.

Resetting the Control Box

If the unit is not functioning properly and/or if the display is registering unusual information, it may be necessary to reset the Control Unit by pushing the Reset Switch inside the Control Box. Refer to the Troubleshooting Guide for a description of circumstances, for which resetting the unit is recommended.

One option to reset the system is to simply remove power from the Control Box. If that is not possible, the unit can be reset using the internal reset switch. To access this switch, loosen the latches on the Control Box and open the Control Box door. The Reset Switch S1 is located on the right hand side of the main control board, as shown in Figure 10 below. Press and release the Reset Switch S1 to reset the system. **NOTE:** Pressing the Reset Switch S1 will cause the lamps to turn off momentarily. Close and re-latch the lid when done.

Pressing the reset switch will not change any of the chamber, readout, or alarm settings entered into the system prior to the reset.

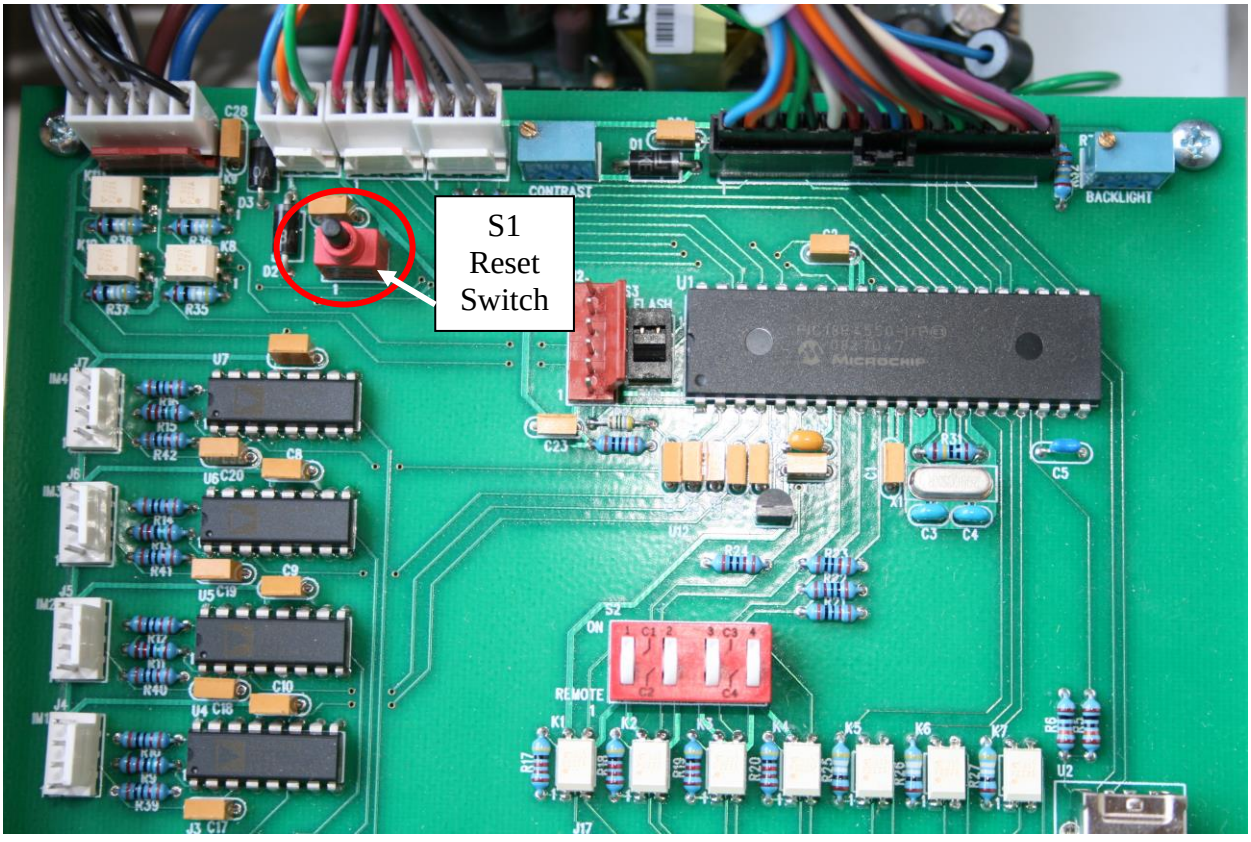

Figure 10. Reset switch location.

MAINTENANCE

Several maintenance and repair options for the UV Treatment System can be performed in the field. A complete set of the available procedures is listed below. All other repairs require the system to be returned to the authorized distributor, or the factory for repair.

Under normal conditions with good water quality, very little maintenance will be required. When a lamp does need replacing (approx.. 9,000 Hrs.), or a UV Monitor need re-calibration (annually), the replacement process is very simple and can be accomplished with ease using common hand tools.

It is highly recommended that an Operation and Maintenance Log be kept for the UV System. A record of the UV Treatment System's performance and maintenance history beginning on the day of installation is very useful in diagnosing future problems. A sample Log Sheet can be found in the back of this manual. (Refer to the Table of Contents for the page location).

Instruction Sheets

1956-001	Lamp Sleeve Replacement w/Lock Nut
1957	Lamp Replacement
1958	Ballast Replacement
1970-001	Cleaning
2045	Lamp Wire Replacement
2118	UV Monitor Cable Replacement
2119	Ballast Cable Replacement
2135	Control Unit Display Replacement
2146	UV Monitor Replacement
2147	Technician Mode
2344	Ballast Replacement, 4" Unit
2458	Fuse Replacement
2459	Clean in Place, NSF 50 Compliant Units

The list of documents above can be found on the digital version of this manual, or by requesting them directly from NeoTech Aqua Solutions Inc.

Sample Operations and Maintenance Log

	Model	Part Number	Rev	Serial Number
Treatment Chamber				
Control Box				
UV Intensity Monitor				

Date	Action Performed	Performed By:
	Installation	

NeoTech Aqua Solutions, Inc., 3853 Calle Fortunada Suite B, San Diego, CA 92123
(858) 571-6590 (voice) ● (858) 571-6596 (fax)
info@neotechaqua.com ● www.neotechaqua.com

TROUBLESHOOTING

Symptom	Possible Cause	Solution
Unit is leaking water	Inlet or outlet connections are loose.	Tighten connections
	The UV chamber is damaged or not sealing properly	Disconnect system and contact distributor or factory for repair.
	The lamp sleeve is broken	Disconnect system and contact distributor or factory for repair
	The lamp sleeve is not sealed properly	Remove and reinstall sleeve per Lamp Sleeve Replacement procedure in this manual. If this is unsuccessful, contact factory.
Display does not come on when power applied to the unit.	Power to the control box is interrupted	Check all electrical connections and breakers to ensure power is available at the unit
	Main Control Box fuse has blown	Find and correct any faults which would lead to this fuse blowing, then replace the fuse. If the fuse still blows, contact distributor or factory for repair.
	Microprocessor has failed	Contact distributor or factory for repair/replacement
Front panel display has spurious characters or does not appear after power applied	Display has been corrupted by noise	Wait 5 seconds for the display to refresh. If it does not, open the front of the box and press the reset button as described in the Operations section. **Note:** This will momentarily turn the lamps off.
	Microprocessor has failed	Contact distributor or factory for repair/replacement
"Intensity" or "Dosimetry" display stays at zero for a particular chamber, or "Lamp Status" display says REPLC for a particular lamp prematurely	Remote Start not activated	Ensure that Remote Start is wired correctly and that +24VDC is present
	Lamp is damaged	Replace lamp. NOTE: Frequent power cycling (> 2-3 times per week) can lead to premature lamp or ballast failure.
	Ballast is damaged	Replace ballast. NOTE: Frequent power cycling (> 2-3 times per week) can lead to premature lamp or ballast failure.
	Line fuse for that chamber has blown	Find and correct any faults which would lead to this fuse blowing, then replace the fuse. If the fuse still blows, contact distributor or factory for repair.
	Power is not being applied to the ballast	Contact distributor or factory for repair/replacement
	UV Intensity Monitor is damaged	Contact distributor or factory for repair/replacement
"Intensity" or "Dosimetry" display is not zero but is lower than normal/ Alarm is detected	Water quality has deteriorated beyond specified limits	After water quality is restored, unit should be flushed and refilled with water, then restarted as normal. If the condition persists, unit may require cleaning. In this case, contact distributor or factory.
	Lamp needs replacement	Replace lamp. NOTE: Frequent power cycling (> 2-3 times per week) can lead to premature lamp or ballast failure.
	Lamp sleeve needs cleaning or replacement	Clean or replace lamp sleeve per Lamp Sleeve Replacement procedure in this manual. If this is unsuccessful, contact factory.
	Chamber needs cleaning	Contact distributor or factory for cleaning instructions

SPARE PARTS

Always use genuine NeoTech Aqua Solutions replacement parts for proper system performance and to ensure warranty coverage remains intact.

Spare Type	Part Number	Applicable Systems	Description
Lamp Replacement Kits	LK-22	T222, D322	Spare Lamp Kit, 22 in., 185 / 254 nm
	LK-28	T228, D328, D428	Spare Lamp Kit, 28 in., 185 / 254 nm
	LK-38	T238, D338, D438	Spare Lamp Kit, 38 in., 185 / 254 nm
	LK-22-D*	D222, D322	Spare Lamp Kit, 22 in., 254 nm
	LK-28-D*	D228, D328, D428	Spare Lamp Kit, 28 in., 254 nm
	LK-38-D*	D238, D338, D438	Spare Lamp Kit, 38 in., 254 nm
Lamp Sleeve Replacement Kits	QSK-22	D222, T222, D322	Spare Lamp Sleeve Kit, 22 in.
	QSK-28	D228, T228, D328, D428	Spare Lamp Sleeve Kit, 28 in.
	QSK-38	D238, T238, D338, D438	Spare Lamp Sleeve Kit, 38 in.
Ballast Replacement Kits	BK-120	D222, T222, D322,D228, T228, D328, D238, T238, D338	Spare Ballast Kit, 120 V
	BK-230	D222, T222, D322,D228, T228, D328, D238, T238, D338	Spare Ballast Kit, 230 V
	BK-120-2	D428, D438	Spare Ballast Kit, 120 V, Dual
	BK-230-2	D428, D438	Spare Ballast Kit, 230 V, Dual
UV Intensity Monitor	UVIM-CAL	All Units	UV Monitor Calibration
	UVIM-3	All Units	UV Monitor
Control Unit Fuse Kit	FK-3	All Units	Fuse Kit
Control Unit	CU-X1	All Units	Control Box, X - number of UV Systems, 120V
	CU-X2	All Units	Control Box, X - number of UV Systems, 230V

*Ozone Free Lamps

Hg

UV lamps contain mercury.
DO NOT put UV lamps in trash.
Recycle or dispose as hazardous waste.

For recycling information in the USA:
www.lamprecycle.org or call 1-866-457-6697.
Outside the USA, consult local government agencies for proper disposal procedures.

WARNING
This product contains a chemical known to
the State of California to cause birth defects or
other reproductive harm.

SPECIFICATIONS

Treatment Chamber

Unit Sizing:

- UV systems will be sized based by the following system requirements
    - Flow rate
    - Dose
        - 30 mJ/cm² for disinfection, minimum recommended dose
        - 300 mJ/cm² for TOC reduction
    - Percent UV transmissivity at 254 nm
    - Water temperature

Treatment Dose:

- Disinfection
    - 30 mJ/cm^2 dose at maximum rated flow at end of lamp life (9000 hrs.)
    - 4-log inactivation of microorganisms
    - Lamp must have a 254 nm peak
- TOC reduction
    - 300 mJ/cm2 dose at maximum rated flow at end of lamp life (9000 hrs.)
    - 1-log reduction
    - Lamp must have a 185 nm peak

Temperature:

- 35 °F (2 °C) min; 140 °F (60 °C) max operating temperature
- Steam sterilize with pure steam up to 257 °F (125 °C) without turning off the lamps for up to 1 hour
- Hot water sanitization for up to 1 hr. without turning off the lamps
- Longer sanitization processes will require lamp cycling or diming
- System can withstand no flow condition for 1 hour
- Temperature monitoring is not required

Number of Lamps:

- One low pressure amalgam long life lamp for flows below 300 gpm of disinfection
- Two low pressure amalgam long life lamps for flows between 300 and 500 gpm of disinfection
- A minimum of 9000 hrs. of lamp life, under normal operating conditions
- Lamp compartment is sealed to prevent ozone leakage

Maximum Pressure:

- 150 psi, both static and transient

Pressure/Flow Properties:

Neotech Aqua Model	Pressure Drop @ Rated flow PSI (Bar)	Rated Flow GPM (m^3/Hr)
T-222	0.1 (0.01	10 (2.3)
T-228	0.2 (0.02)	15 (3.4)
T-238	0.3 (0.03)	20 (4.5)
D-222	0.8 (0.07)	35 (8.0)
D-228	2.8 (0.24)	50 (11.4)
D-238	5.2 (0.45)	65 (15.0)
D-322	2.5 (0.22)	100 (22.7)
D-328	6.5 (0.56)	150 (34.0)
D-338	14.4 (1.25)	225 (51.1)
D-428	2.8 (0.24)	300 (68.0)
D-438	10.9 (0.95)	500 (90.8)

Materials:

- Water contact materials
  - 316L stainless steel, with an Ra 15 finish (electropolished and passivated)
  - Synthetic quartz
  - PTFE (Teflon)
  - Viton
- The UV chamber exterior surfaces are made of 304 stainless steel.
- The chamber shall reflect 99% of the UV light back into the water stream

Plumbing and connections:

- The units are provided with sanitary tri-clamp fittings
- The treatment chamber can be mounted in any configuration required for the application, horizontal or vertical
- Entry and exit connections can be rotated to minimize and simplify plumbing

Hydraulics

- Water shall enter and leave at 45 deg angle to eliminate the need for straight pipe runs
- The internal flow shall be designed to provide turbulent and plug flow to assure equal treatment to the flow

UV Monitor

- Calibration is NIST traceable
- The UV monitor is not in contact with the water
- The UV monitor does not interfere with the flow of the water

Control Box

General:

- The control box is capable of operating up to 4 treatment chambers, with each treatment chamber having independent controls and diagnostics

Electrical:

Input voltage: 120VAC ± 10% or 230 VAC ± 10%
Input frequency: 50/60 Hz
Input current: 1 – 10.5 A depending on the input voltage and the quantity of treatment chambers connected
Power: 100 – 308 W depending on unit size, per chamber

Controls:

- Remote Run/Stop: +24 VDC ± 10%; 4 channels
- 4-20 mA signal proportional to UV intensity monitor output; up to 4 channels
- Fault code: Parallel, 3 bit, dry contact closure signal indicating system faults using the following code (1 = contacts closed, 0 = contacts open):

Display:

- 4 line LED Display provides indication of Power on/off, lamp status, UV Intensity mW/cm^2] or UV dose [mJ/cm^2], fault alarm settings, total hours of operation, hours of current lamp operation, alarm status
- Lamp status LED
- Power LED
- UV output display selectable
    - Lamp OK or not (go no-go) display
    - Lamp intensity in mW/cm^2
    - System dosage in mJ/cm^2

Physical:

- L x W x H: 8” x 4” x 10” (203mm x 102mm x 254mm)
- 9.5 lbs. (4.3 kg)
- NEMA 4X rating

Certifications

- Safety - CE, UL/NRTL, CSA NRTL, TUV listing, and CB report
- NSF-61

Maintenance

Lamps:

- Lamps to be changed as required through NIST traceable monitoring, or annually. More frequent changes may be required if the power is cycled more than once a day
- The lamps can be replaced without the use of tools
- The lamp change is a dry process

UV Monitor:

- The UV monitor is calibrated to a NIST traceable source
- The monitor should be calibrated annually
- The UV monitor change is a dry process

Cleaning:

- Depending on the water conditions the system may require periodic cleaning of the lamp sleeves and flow tube
- Cleaning can be accomplished as a CIP process or mechanically by removing the unit from the flow
- Cleaning may be accomplished by hot water or steam cleaning

Environmental:

Indoor use only; must be shaded/sheltered from sunlight and precipitation
Ambient Temperature range: 35 °F (2 °C) min; 110 °F (49 °C) max
Humidity: up to 95% RH, noncondensing
Equipment designed to meet NEMA 12 and IP 53 standards

Physical:

UV chamber: Dependent upon system rating and configuration
Control Box: L x W x H: 8" x 4" x 10" (203mm x 102mm x 254mm) ; 9.5 lbs. (4.3 kg)
Shipping weight: Dependent upon system rating and configuration
Materials of construction: The UV chamber exterior surfaces are made of stainless steel. The control box is made of either stainless steel or reinforced plastic, depending on customer requirements. The water contact surfaces consist exclusively of electro polished and passivated 316L stainless steel, synthetic quartz, PTFE (Teflon), and Viton elastomer.

Certifications:

CE, UL/NRTL, CSA equivalent, and TUV listing.

LIMITED WARRANTY

NeoTech Aqua Solutions (NTAS) warrants your UVS Water Purification System (Equipment) to be free from defects in material and workmanship for a period of one (1) year from the date of installation, or eighteen (18) months from date of purchase (whichever is shorter), by the original owner (Customer). The warrantor will, at his option and expense, either repair or replace such units subject to the following conditions, exceptions, and exclusions.

This warranty shall not apply to any failure or defect which results from the Equipment not being operated and maintained in strict accordance with instructions specified in the Operation and Maintenance manual, or which results from mishandling, misuse, neglect, improper storage, improper operation of the Equipment with other equipment furnished by the Customer or other third parties, or defects in designs or specifications furnished by or on behalf of the Customer by a person other than NTAS. In addition, this warranty shall not apply to Equipment that has been altered or repaired after start-up by anyone except: (a) authorized representatives of NTAS, or (b) Customer acting under specific instructions from NTAS.

Customer must notify NTAS in writing within 5 days of the date of any Equipment failure. This notification shall include a description of the problem, a copy of the operator's log, a copy of the Customer's maintenance record and any analytical results detailing the problem. If Customer has not maintained the operator's log and maintenance record in the manner directed in the Operation and Maintenance manual, or does not notify NTAS of the problem as specified above, this warranty may, at NTAS's discretion, be invalid.

Customer will fully cooperate with NTAS, in the manner requested by NTAS, in attempting to diagnose and resolve the problem by way of telephone support. If the problem can be diagnosed by telephone support and a replacement part is required NTAS will either, at NTAS's expense, ship a repaired, reworked or new part to the Customer who will install such part as directed by NTAS or will direct Customer to acquire, at NTAS’s expense, such part from a third party and then install such part as directed by NTAS.

In the event that NTAS determines that the problem cannot be resolved by way of telephone support and/or shipment by NTAS, or acquisition by the Customer, of a replacement part for installation by the Customer, NTAS will send one or more persons to make an onsite inspection. If an onsite visit is made, NTAS personnel will evaluate the problem and repair or replace any Equipment determined to be in breach of this warranty. If the problem is not attributable to a breach of this warranty, NTAS reserves the right to invoice the Customer for this service.

Equipment components manufactured by third parties but furnished to Customer by NTAS are warranted by the original manufacturer, only to the extent of the original manufacturer's warranty, and are not covered by the above warranty.

This warranty is the exclusive remedy for all claims based on a failure of or defect in the Equipment, whether the claim is based on contract (including fundamental breach), tort (including negligence), strict liability, or otherwise. This warranty is in lieu of all other warranties whether written, oral, implied or statutory. Without limitation, no warranty of merchantability or fitness for a particular purpose shall apply to the Equipment.

NTAS does not assume any liability for personal injury or property damage caused by use or misuse of Equipment. NTAS shall not in any event be liable for special, incidental, indirect or consequential damages including, without limitation, lost profits, lost business opportunities, lost revenue or loss or depreciation of goodwill, even if it has been advised of the possibility thereof. NTAS's liability shall, in all instances, be limited to repair or replacement of Equipment in breach of this warranty and shall not exceed the cost of such repair or replacement. This liability with respect to repair or replacement will terminate upon the expiration date of this warranty.

In addition to the foregoing, in no event shall NTAS's liability relating to the Equipment, or the agreement between NTAS and the Customer relating to the Equipment, exceed that portion of the purchase price for the Equipment which is actually paid to NTAS.

Any of the following conditions will void the equipment warranty:

1. Failure to connect proper electrical service to unit.

2. Failure to properly ground the unit.

3. Failure to eliminate excessive vibration, piping, movement, or “water hammer”.

4. Failure to exercise caution in the handling of the sensitive and delicate components (such as lamps, quartz sleeves, electronic boards, etc.) during installation and/or maintenance procedures.

5. Failure to avoid excessive stops and starts. Not more than three (3) “ON/OFF” cycles per 24 hours of operation.

6. Operation of visibly damaged equipment.

7. Failure to avoid undue overhead piping stress, which can result in structural damage to the UV unit. Limit the load to 25 lbs, for 2” & 3”, 50 lbs, for 4” and 75 lbs, for 6” or above. Torsion loads or side loading of the risers should be eliminated.

8. Use of components other than those provided or authorized by NTAS.

9. Failure to correct overhead piping connection leaks or compression nut seal leaks which result in damage to the electrical components.

10. Allowing operating water temperature to exceed 120°F.

CONDITIONS, EXCEPTIONS, AND EXCLUSIONS

The foregoing limited Warranty is subject to the following terms and conditions:

1. This limited Warranty shall not apply to any unit which has been repaired or altered by anyone other than the Warrantor or by a person authorized by the Warrantor, nor to any units which have been subject to misuse, neglect, or accident.
2. This limited Warranty runs exclusively to the original Customer and with respect to the original installation only.
3. WARRANTOR SHALL NOT BE LIABLE FOR ANY INCIDENTAL OR CONSEQUENTIAL DAMAGES.
4. This limited Warranty excludes the cost of labor in removing any defective unit or installing any replacement unit.

Hg

UV lamps contain mercury.

DO NOT put UV lamps in trash. Recycle or dispose as hazardous waste.or recycling information in your area: www.lamprecycle.org or call 1-866-457-6697.

WARNING

This product contains a chemical known tothe State of California to cause birth defects or other reproductive harm.

For Service, contact your local distributor or contact NeoTech Aqua Solutions directly:

NeoTech Aqua Solutions, Inc., 3853 Calle Fortunada, Suite B, San Diego, CA 92123
(858) 571-6590 (voice) ● (858) 571-6596 (fax)
info@neotechaqua.com ● www.neotechaqua.com

Copyright 2007-2011 by NeoTech Aqua Solutions, Inc. All rights reserved

Appendix A.

Equipment Certificates

ZERTIFIKAT • CERTIFICATE • 認證證書 • СЕРТИФИКАТ • CERTIFICADO • CERTIFICAT

America

CERTIFICATE

No. U8 16 05 95524 002

Holder of Certificate: **Neotech Aqua Solutions, Inc.**
3853 Calle Fortunada, suite B
San Diego CA 92123
USA

Certification Mark:

C US

Product: **Water treatment equipment (UV Water Purification Systems)**

The product was voluntarily tested according to the relevant safety requirements noted above. It can be marked with the certification mark above. The mark must not be altered in anyway. This product certification system operated by TÜV SÜD America Inc. most closely resembles system 3 as defined in ISO/IEC Guide 67. Certification is based on the TÜV SÜD "Testing and Certification Regulations". TÜV SÜD America Inc. is an OSHA recognized NRTL and a Standards Council of Canada accredited certification body.

Test report no.: 095-72114894-000

Valid until: 2021-05-19

Date, 2016-06-04

Page 1 of 6

627095

TÜV SÜD AMERICA INC • 10 Centennial Drive • Peabody, MA 01960 USA • www.TUVamerica.com

UCB_F_12.02 2012-02

NSF International

OFFICIAL LISTING

NSF International Certifies that the products appearing on this Listing conform to the requirements of NSF/ANSI Standard 61 - Drinking Water System Components - Health Effects

This is the Official Listing recorded on April 19, 2016.

NeoTech Aqua Solutions, Inc.
3853 Calle Fortunada
San Diego, CA 92123
888-718-5040
858-571-6590

Facility: San Diego, CA

Mechanical Devices

Trade Designation	Size	Water Contact Temp	Water Contact Material
Ultra-Violet Reactors [1] [2] [G]			
Magnum	6"	CLD 23	MLTPL
NeoTech D222	1 1/2"	CLD 23	MLTPL
NeoTech D228	1 1/2"	CLD 23	MLTPL
NeoTech D238	1 1/2"	CLD 23	MLTPL
NeoTech D322	1 1/2"	CLD 23	MLTPL
NeoTech D328	2"	CLD 23	MLTPL
NeoTech D338	2"	CLD 23	MLTPL
NeoTech D428-X	3"	CLD 23	MLTPL
NeoTech D438-X	3"	CLD 23	MLTPL
Neotech D860-X	6"	CLD 23	MLTPL
NeoTech T222	1 1/2"	CLD 23	MLTPL
NeoTech T228	1 1/2"	CLD 23	MLTPL
NeoTech T238	1 1/2"	CLD 23	MLTPL

[1] Certified for a minimum daily flow rate of 2,400 gallons.

[2] X indicates the number of lamps and can be any of the following: 2, 4, 6, or 8.

[G] Product is Certified to NSF/ANSI 372 and conforms with the lead content requirements for "lead free" plumbing as defined by California, Vermont, Maryland, and Louisiana state laws and the U.S. Safe Drinking Water Act.

Note: Additions shall not be made to this document without prior evaluation and acceptance by NSF International.

C0120416

789 N. Dixboro Road, Ann Arbor, Michigan 48105-9723 USA
1-800-NSF-MARK / 734-769-8010
www.nsf.org

The Public Health and Safety Organization

NSF Product and Service Listings

NSF/ANSI 50
Equipment for Swimming Pools, Spas, Hot Tubs and Other Recreational Water Facilities

NeoTech Aqua Solutions, Inc. (http://www.neotechaqua.com)
3853 Calle Fortunada, Suite B
San Diego, CA 92123
United States
858-571-6590
Visit this company's website (http://www.neotechaqua.com)

Facility : San Diego, CA

Ultraviolet Light Process Equipment

UVS Series Reactors[1] [2] [3]

D222 D228 D238 D322 D328 D338 D428 D438[4]

[1] Certified for pool and spa/hot tub end use.
[2] Product has met the requirements of NSF Standard 50, Annex H.1: Disinfection Efficacy for the >= 3 log reduction of Enterococcus faecium [ATCC #6569] and Pseudomonas aeruginosa [ATCC #27313]. This product is intended for supplemental disinfection and should be used with registered or approved disinfection chemicals to impart residual concentrations in accordance with state and local regulations. This product has not been evaluated to the crytosporidium inactivation requirements of NSF/ANSI 50.
[3] This product has not been Certified by NSF to the requirements of the National Electrical Code or electrical product safety standards.
[4] UV system with model designation D438 is NSF Certified for pool and spa end use at a maximum working pressure of 50p.s.i.
The D438 system type is a stainless steel reactor vessel with a monochromatic UV lamp utilizing an in-place chemical cleaning system.
The D438 has met the NSF/ANSI Standard 50 3-log (or better) cryptosporidium inactivation requirements under the following conditions:
Maximum flow rate of 150gpm at 91-96% or greater UVT when the sensor reading is 7.6 (mW/cm2) or greater.
Maximum flow rate of 251gpm at 95-96% or greater UVT when the sensor reading is 10.0 (mW/cm2) or greater.
Maximum flow rate of 470gpm at 96-98% or greater UVT when the sensor reading is 12.5 (mW/cm2) or greater.
Maximum flow rate of 500gpm at 90-98% or greater UVT when the sensor reading is 12.4 (mW/cm2) or greater.

Number of matching Manufacturers is 1
Number of matching Products is 8
Processing time was 0 seconds

1 of 1

DECLARATION OF CONFORMITY

Issued by:

Ultraviolet Sciences, Inc.
9189 Chesapeake Drive
San Diego, CA 92103, USA

We declare under our sole responsibility that the product

HRC Series of ultraviolet water purification systems

to which this declaration relates is in conformity with the following standard(s) or other normative document(s)

IEC 61010, EN61000-6-2, EN61000-6-4, EN610003-2

Authorized by:

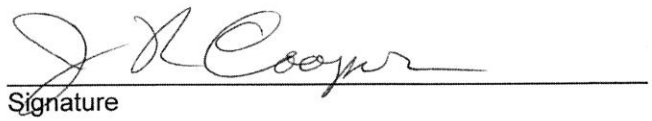

Signature

June 13, 2008

James R. Cooper
President
Ultraviolet Sciences, Inc.

Appendix B.

Mounting Diagrams for NTAS Chambers and Control Box

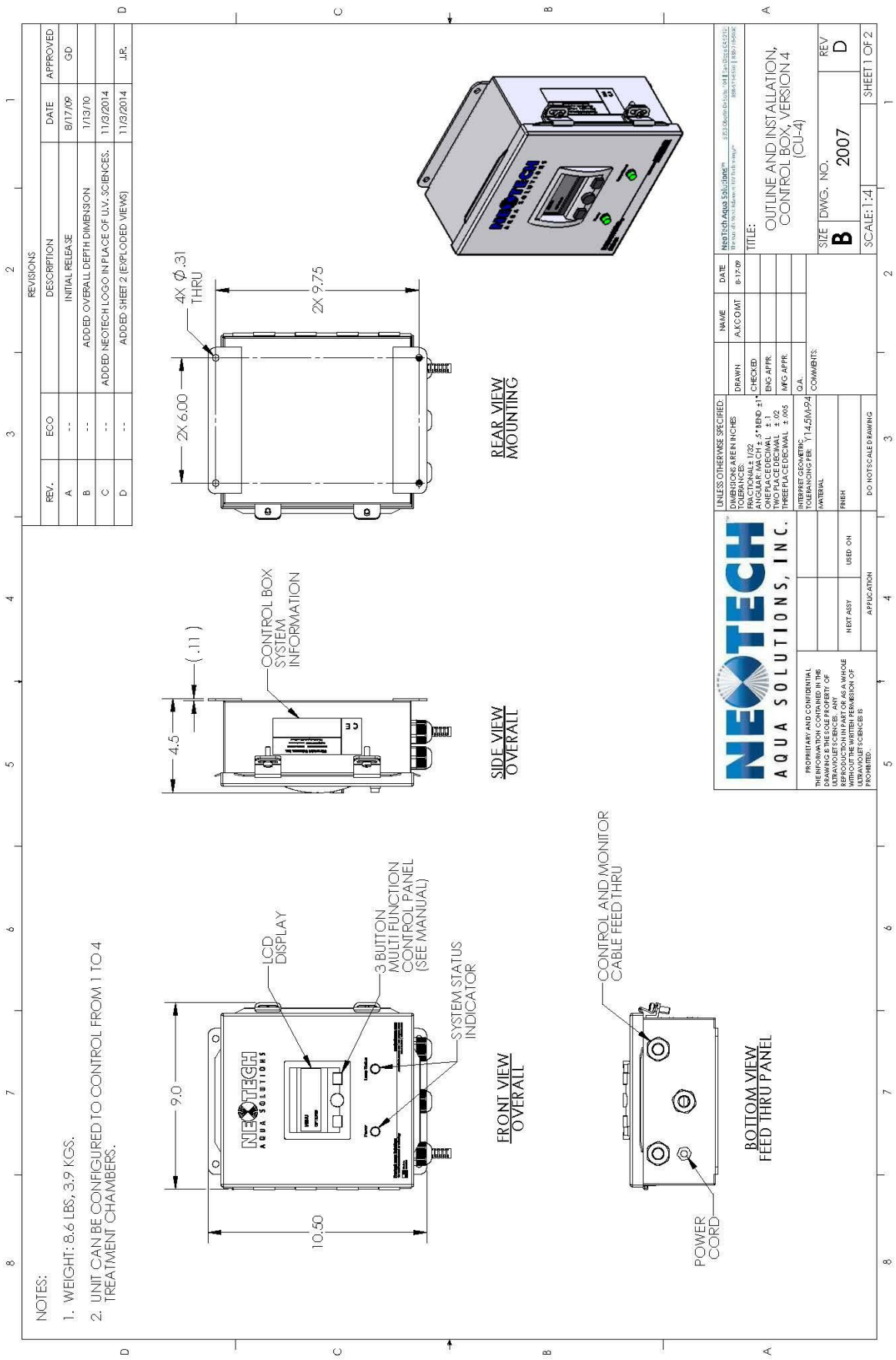
NOTES:
1. WEIGHT: 8.6 LBS, 3.9 KGS.
2. UNIT CAN BE CONFIGURED TO CONTROL FROM 1 TO 4 TREATMENT CHAMBERS.
REVISIONS
REV. | ECO | DESCRIPTION | DATE | APPROVED
A | -- | INITIAL RELEASE | 8/17/09 | GD
B | -- | ADDED OVERALL DEPTH DIMENSION | 1/13/10
C | -- | ADDED NEOTECH LOGO IN PLACE OF U.V. SCIENCES. | 11/3/2014
D | -- | ADDED SHEET 2 (EXPLODED VIEWS) | 11/3/2014 | J.R.
9.0
10.50
LCD DISPLAY
3 BUTTON MULTI FUNCTION CONTROL PANEL (SEE MANUAL)
SYSTEM STATUS INDICATOR
FRONT VIEW OVERALL
4.5
(.11)
CONTROL BOX SYSTEM INFORMATION
SIDE VIEW OVERALL
2X 6.00
4X Ø.31 THRU
2X 9.75
REAR VIEW MOUNTING
CONTROL AND MONITOR CABLE FEED THRU
POWER CORD
BOTTOM VIEW FEED THRU PANEL
NEOTECH AQUA SOLUTIONS, INC.
UNLESS OTHERWISE SPECIFIED:
DIMENSIONS ARE IN INCHES
TOLERANCES:
FRACTIONAL ± 1/32
ANGULAR: MACH ± .5° BEND ±1°
ONE PLACE DECIMAL ± .1
TWO PLACE DECIMAL ± .02
THREE PLACE DECIMAL ± .005
INTERPRET GEOMETRIC TOLERANCING PER: Y14.5M-94
MATERIAL
FINISH
DO NOT SCALE DRAWING
NEXT ASSY
USED ON
APPLICATION
PROPRIETARY AND CONFIDENTIAL
THE INFORMATION CONTAINED IN THIS DRAWING IS THE SOLE PROPERTY OF ULTRAVIOLET SCIENCES. ANY REPRODUCTION IN PART OR AS A WHOLE WITHOUT THE WRITTEN PERMISSION OF ULTRAVIOLET SCIENCES IS PROHIBITED.
NAME | DATE
DRAWN | A.KCOMT | 8-17-09
CHECKED
ENG APPR.
MFG APPR.
Q.A.
COMMENTS:
NeoTech Aqua Solutions™
TITLE:
OUTLINE AND INSTALLATION, CONTROL BOX, VERSION 4 (CU-4)
SIZE B
DWG. NO. 2007
REV D
SCALE: 1:4
SHEET 1 OF 2

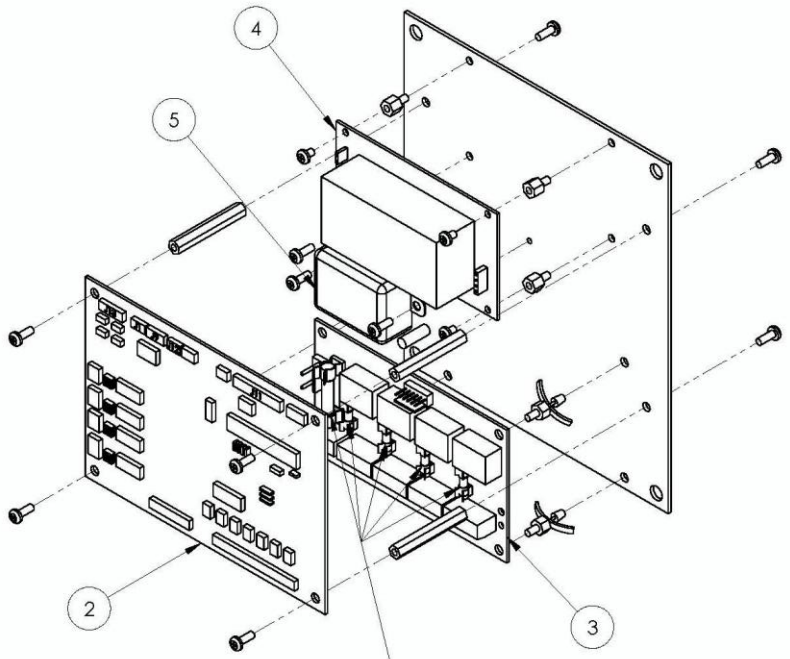

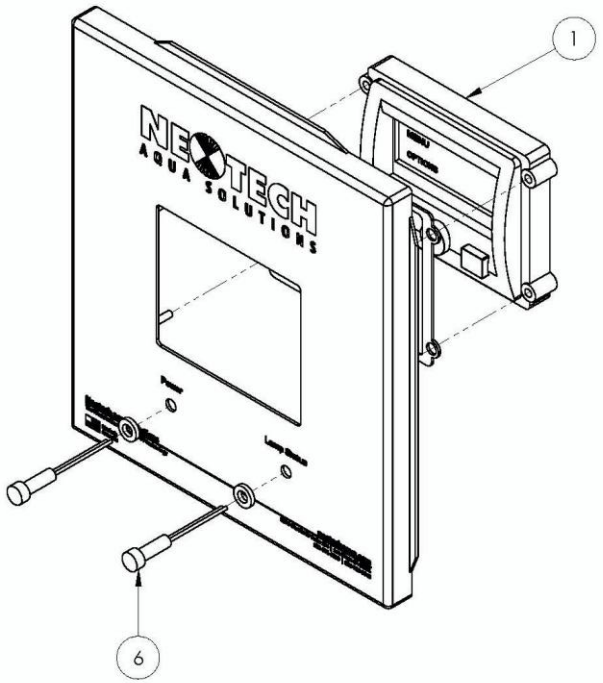

ITEM NO.	QTY.	DESCRIPTION
1	1	DISPLAY
2	1	CONTROL PCBA
3	1	POWER PCBA (SEE NOTE 2)
4	1	POWER SUPPLY
5	1	POWER LINE FILTER
6	2	POWER/STATUS L.E.D.

NOTES:

1. EXCEPT FOR FUSES, NONE OF THE CONTROL PARTS GENERALLY NEED REPLACING. CALL FACTORY FOR ASSISTANCE, IF NEEDED.
2. FUSES ARE LOCATED ON THIS BOARD. FOR SPARES, ORDER PART NUMBER: FK-1.

PROPRIETARY AND CONFIDENTIAL
THE INFORMATION CONTAINED IN THIS DRAWING IS THE SOLE PROPERTY OF ULTRA VIOLET SCIENCES. ANY REPRODUCTION IN PART OR AS A WHOLE WITHOUT THE WRITTEN PERMISSION OF ULTRA VIOLET SCIENCES IS PROHIBITED.

NEOTECH AQUA SOLUTIONS, INC.

SIZE	DWG. NO.	REV
B	2007	D
SCALE: 1:2		SHEET 2 OF 2

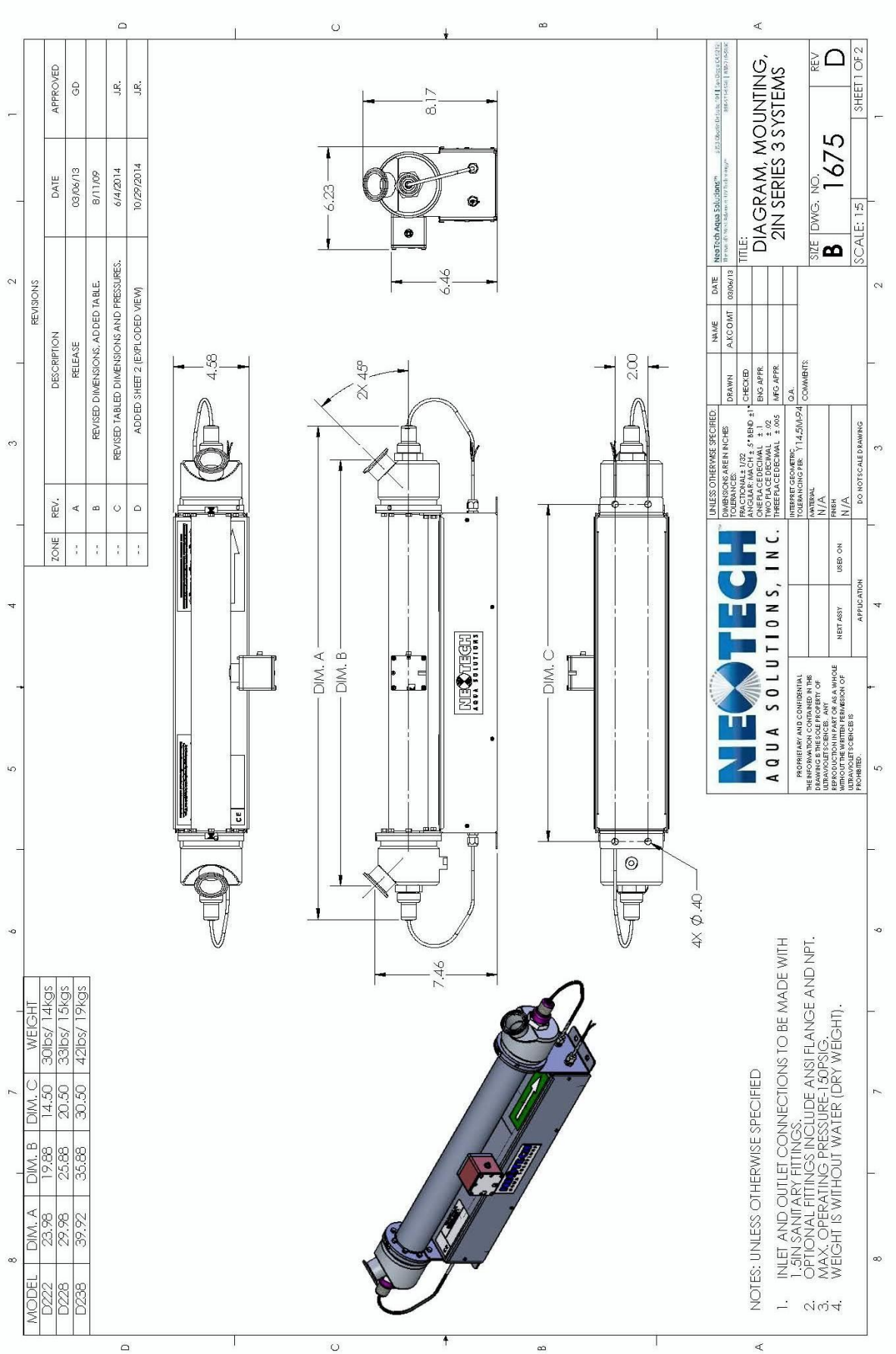
REVISIONS
ZONE | REV. | DESCRIPTION | DATE | APPROVED
-- | A | RELEASE | 03/06/13 | GD
-- | B | REVISED DIMENSIONS, ADDED TABLE. | 8/11/09 |
-- | C | REVISED TABLED DIMENSIONS AND PRESSURES. | 6/4/2014 | J.R.
-- | D | ADDED SHEET 2 (EXPLODED VIEW) | 10/29/2014 | J.R.
MODEL | DIM. A | DIM. B | DIM. C | WEIGHT
D222 | 23.98 | 19.88 | 14.50 | 30lbs/ 14kgs
D228 | 29.98 | 25.88 | 20.50 | 33lbs/ 15kgs
D238 | 39.92 | 35.88 | 30.50 | 42lbs/ 19kgs
NOTES: UNLESS OTHERWISE SPECIFIED
1. INLET AND OUTLET CONNECTIONS TO BE MADE WITH 1.5IN SANITARY FITTINGS.
2. OPTIONAL FITTINGS INCLUDE ANSI FLANGE AND NPT.
3. MAX. OPERATING PRESSURE-150PSIG.
4. WEIGHT IS WITHOUT WATER (DRY WEIGHT).
4.58
2X 45°
DIM. A
DIM. B
7.46
DIM. C
2.00
4X Ø.40
6.23
8.17
6.46
NEOTECH AQUA SOLUTIONS, INC.
UNLESS OTHERWISE SPECIFIED
DRAWN A.KOOMT 03/06/13
CHECKED
ENG APPR.
MFG APPR.
Q.A.
COMMENTS:
NEXT ASSY
USED ON
APPLICATION
DO NOT SCALE DRAWING
NeoTech Aqua Solutions
TITLE:
DIAGRAM, MOUNTING, 2IN SERIES 3 SYSTEMS
SIZE B
DWG. NO. 1675
REV D
SCALE: 1:5
SHEET 1 OF 2

NOTES:

1. SPARE LAMPS AND LAMP SLEEVE KITS INCLUDE THE NECESSARY O-RINGS.
2. GENERALLY DOES NOT NEED REPLACEMENT. CALL FACTORY, IF REQUIRED.
3. NEVER REMOVE END CONNECTORS.

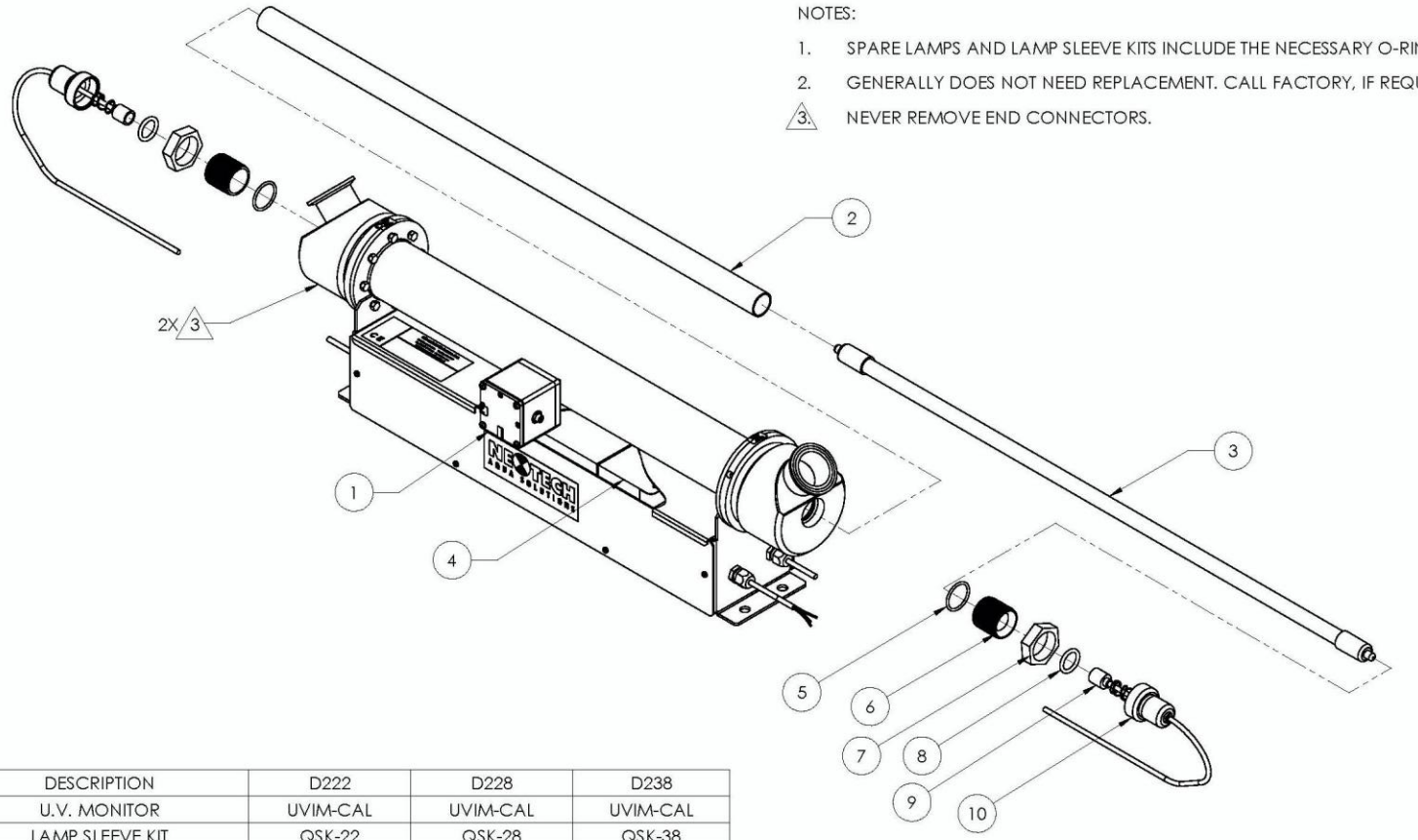

ITEM NO.	QTY.	DESCRIPTION	D222	D228	D238
1	1	U.V. MONITOR	UVIM-CAL	UVIM-CAL	UVIM-CAL
2	1	LAMP SLEEVE KIT	QSK-22	QSK-28	QSK-38
3	1	LAMP KIT	LK-22	LK-28	LK-38
4	1	BALLAST KIT	BK-120/BK-230	BK-120/BK-230	BK-120/BK-230
5	2	LAMP SLEEVE O-RING	SEE NOTE 1	SEE NOTE 1	SEE NOTE 1
6	2	END COUPLER	SEE NOTE 2	SEE NOTE 2	SEE NOTE 2
7	2	LOCKING RING	SEE NOTE 2	SEE NOTE 2	SEE NOTE 2
8	2	LAMP O-RING	SEE NOTE 1	SEE NOTE 1	SEE NOTE 1
9	2	LAMP WIRE WITH CONNECTOR	SEE NOTE 2	SEE NOTE 2	SEE NOTE 2
10	2	LAMP CAP	SEE NOTE 2	SEE NOTE 2	SEE NOTE 2

PROPRIETARY AND CONFIDENTIAL
THE INFORMATION CONTAINED IN THIS DRAWING IS THE SOLE PROPERTY OF ULTRAVIOLET SCIENCES. ANY REPRODUCTION IN PART OR AS A WHOLE WITHOUT THE WRITTEN PERMISSION OF ULTRAVIOLET SCIENCES IS PROHIBITED.

NEOTECH AQUA SOLUTIONS, INC.

SIZE	DWG. NO.	REV
B	1675	D
SCALE: 1:4		SHEET 2 OF 2

MODEL	DIM. A	DIM. B	DIM. C	WEIGHT
D322	24.11	19.59	13.68	38lbs/ 17kgs
D328	30.11	25.59	19.68	43lbs/ 20kgs
D338	40.11	35.59	29.68	51lbs/ 23kgs

REVISIONS				
ZONE	REV.	DESCRIPTION	DATE	APPROVED
- -	A	RELEASE	06/03/08	R.M.
- -	B	REVISED DIMENSIONS, ADDED TABLE.	8/11/09	G.D.
- -	C	ADDED SHEET 2 (EXPLODED VIEW)	10/30/2014	J.R.

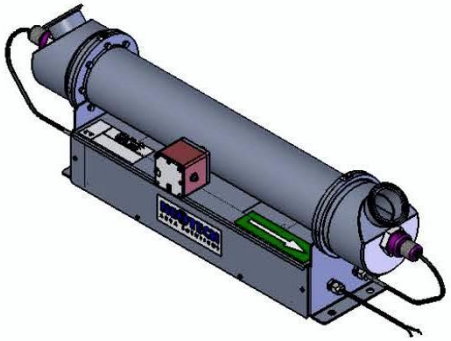

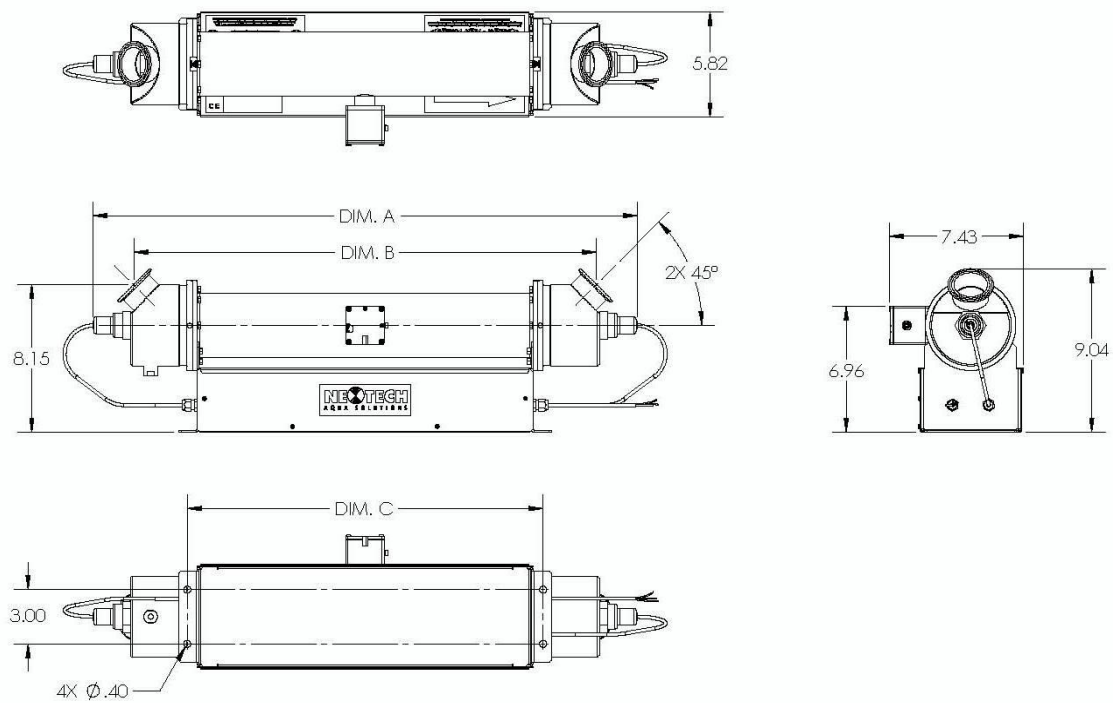

NOTES: UNLESS OTHERWISE SPECIFIED

1. INLET AND OUTLET CONNECTIONS TO BE MADE WITH 2.0IN SANITARY FITTINGS.
2. OPTIONAL FITTINGS INCLUDE ANSI FLANGE AND NPT.
3. MAX. OPERATING PRESSURE-150PSIG.
4. WEIGHT IS WITHOUT WATER (DRY WEIGHT).

NEOTECH AQUA SOLUTIONS, INC.

PROPRIETARY AND CONFIDENTIAL
THE INFORMATION CONTAINED IN THIS DRAWING IS THE SOLE PROPERTY OF ULTRAVIOLET SCIENCES. ANY REPRODUCTION IN PART OR AS A WHOLE WITHOUT THE WRITTEN PERMISSION OF ULTRAVIOLET SCIENCES IS PROHIBITED.

NEXT ASSY	USED ON
APPLICATION	

UNLESS OTHERWISE SPECIFIED:
DIMENSIONS ARE IN INCHES
TOLERANCES:
FRACTIONAL ± 1/32
ANGULAR: MACH ± .5° BEND ±1°
ONE PLACE DECIMAL ± .1
TWO PLACE DECIMAL ± .02
THREE PLACE DECIMAL ± .005
INTERPRET GEOMETRIC TOLERANCING PER: Y14.5M-94
MATERIAL
FINISH
DO NOT SCALE DRAWING

	NAME	DATE
DRAWN	R. May	6/3/08
CHECKED		
ENG APPR.		
MFG APPR.		
Q.A.		

COMMENTS:

NeoTech Aqua Solutions™
5353 Oberlin Drive Suite 104 | San Diego CA 92121
Thomas W. Mont Adamson 109 Technology™ 888-571-6556 | 888-716-5000

TITLE:
DIAGRAM, MOUNTING, 3IN SERIES 3 SYSTEMS

SIZE	DWG. NO.	REV
B	1723	C

SCALE: 1:6 SHEET 1 OF 2

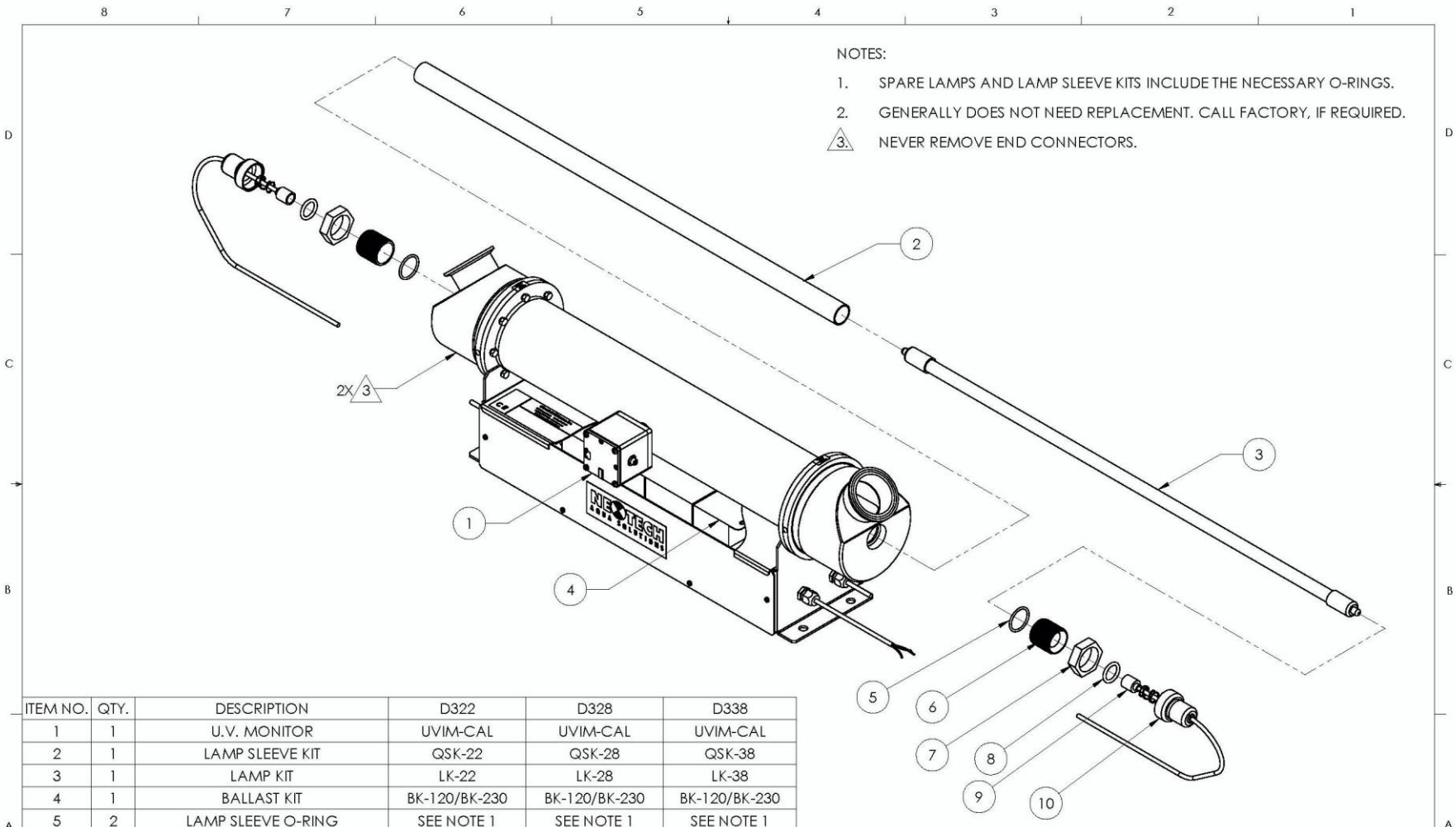

ITEM NO.	QTY.	DESCRIPTION	D322	D328	D338
1	1	U.V. MONITOR	UVIM-CAL	UVIM-CAL	UVIM-CAL
2	1	LAMP SLEEVE KIT	QSK-22	QSK-28	QSK-38
3	1	LAMP KIT	LK-22	LK-28	LK-38
4	1	BALLAST KIT	BK-120/BK-230	BK-120/BK-230	BK-120/BK-230
5	2	LAMP SLEEVE O-RING	SEE NOTE 1	SEE NOTE 1	SEE NOTE 1
6	2	END COUPLER	SEE NOTE 2	SEE NOTE 2	SEE NOTE 2
7	2	LOCKING RING	SEE NOTE 2	SEE NOTE 2	SEE NOTE 2
8	2	LAMP O-RING	SEE NOTE 1	SEE NOTE 1	SEE NOTE 1
9	2	LAMP WIRE WITH CONNECTOR	SEE NOTE 2	SEE NOTE 2	SEE NOTE 2
10	2	LAMP CAP	SEE NOTE 2	SEE NOTE 2	SEE NOTE 2

PROPRIETARY AND CONFIDENTIAL
THE INFORMATION CONTAINED IN THIS DRAWING IS THE SOLE PROPERTY OF ULTRAVIOLET SCIENCES. ANY REPRODUCTION IN PART OR AS A WHOLE WITHOUT THE WRITTEN PERMISSION OF ULTRAVIOLET SCIENCES IS PROHIBITED.

NEOTECH AQUA SOLUTIONS, INC.

SIZE	DWG. NO.	REV
B	1723	C
SCALE: 1:4		SHEET 2 OF 2

MODEL	DIM. A	DIM. B	DIM. C	WEIGHT
D428	30.55	26.95	19.53	55lbs/ 25.0kgs
D438	40.55	36.95	29.53	63lbs/ 28.6kgs

REVISIONS			
REV.	DESCRIPTION	DATE	APPROVED
B	ADDED TABLE	8/19/2009	
C	REPLACED UV SCIENCES LOGO WITH NEOTECH LOGO.	1/5/2014	
D	ADDED SHEET 2 (EXPLODED VIEW)	10/28/2014	J.R.

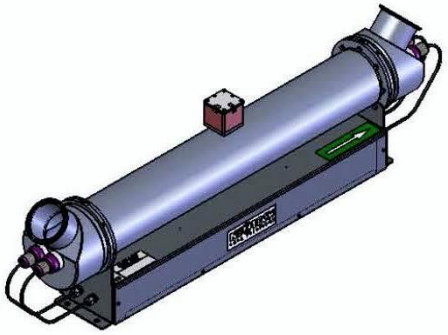

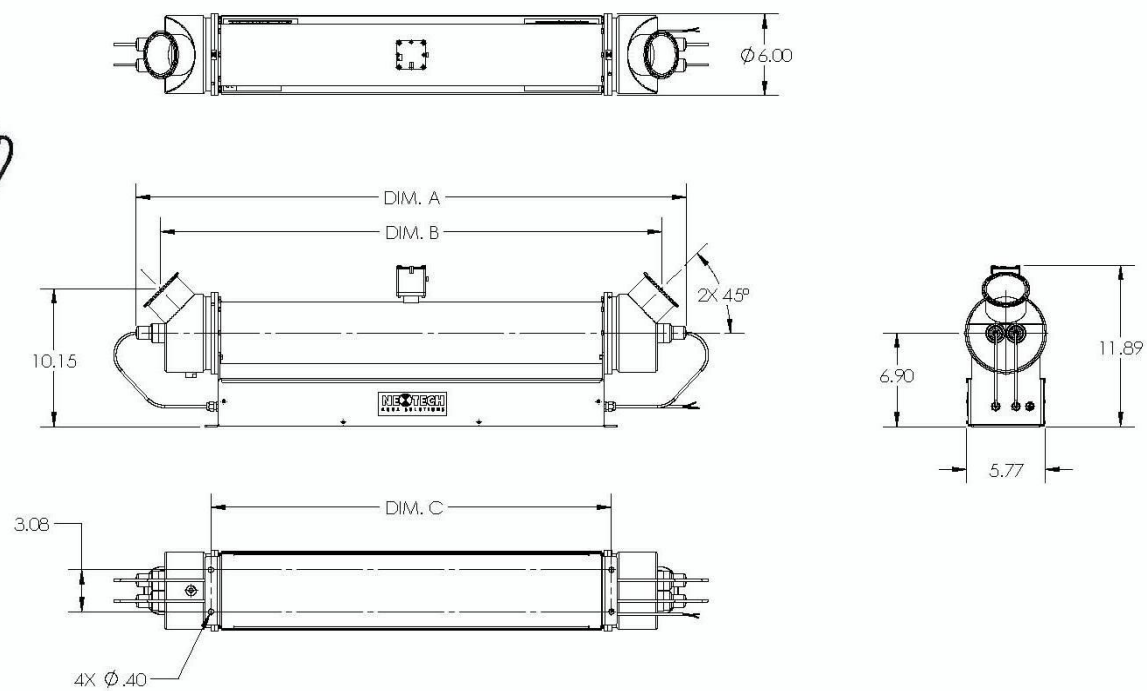

NOTES: UNLESS OTHERWISE SPECIFIED

1. INLET AND OUTLET CONNECTIONS TO BE MADE WITH 3.0IN SANITARY FITTINGS.
2. OPTIONAL FITTINGS INCLUDE ANSI FLANGE AND NPT.
3. MAX. OPERATING PRESSURE-150PSIG.
4. WEIGHT IS WITHOUT WATER (DRY WEIGHT).

NEOTECH AQUA SOLUTIONS, INC.

PROPRIETARY AND CONFIDENTIAL
THE INFORMATION CONTAINED IN THIS DRAWING IS THE SOLE PROPERTY OF ULTRAVIOLET SCIENCES. ANY REPRODUCTION IN PART OR AS A WHOLE WITHOUT THE WRITTEN PERMISSION OF ULTRAVIOLET SCIENCES IS PROHIBITED.

NEXT ASSY	USED ON
APPLICATION	

UNLESS OTHERWISE SPECIFIED:
DIMENSIONS ARE IN INCHES
TOLERANCES:
FRACTIONAL ± 1/32
ANGULAR: MACH ± .5° BEND ±1°
ONE PLACE DECIMAL ± .1
TWO PLACE DECIMAL ± .02
THREE PLACE DECIMAL ± .005
INTERPRET GEOMETRIC TOLERANCING PER: Y14.5M-94
MATERIAL
FINISH
DO NOT SCALE DRAWING

	NAME	DATE
DRAWN	J. Raub	10/20/14
CHECKED		
ENG APPR.		
MFG APPR.		
Q.A.		

COMMENTS:

NeoTech Aqua Solutions™

TITLE:
DIAGRAM, MOUNTING, 4IN SERIES 3 SYSTEMS

SIZE	DWG. NO.	REV
B	2020	D

SCALE: 1:8 SHEET 1 OF 2

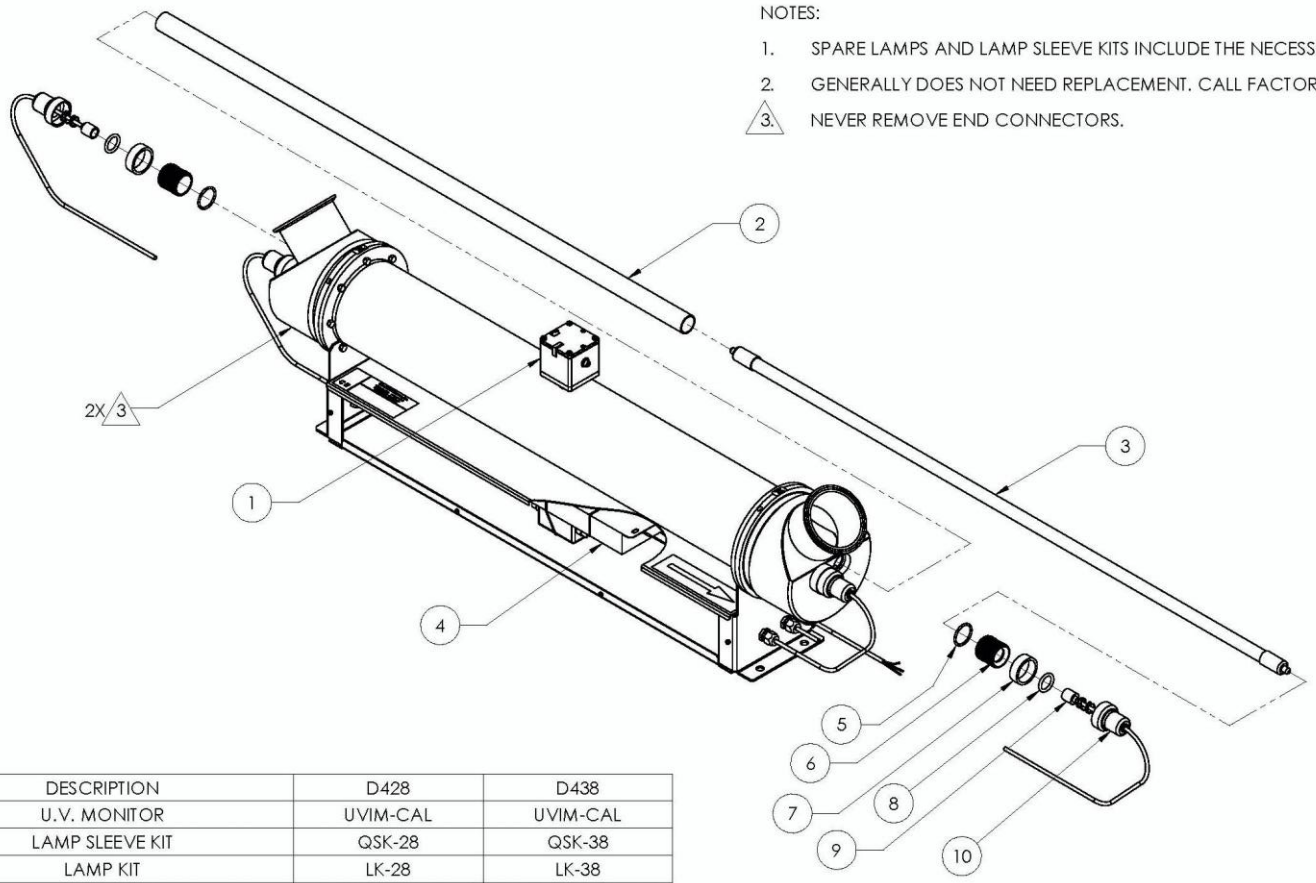

ITEM NO.	QTY.	DESCRIPTION	D428	D438
1	1	U.V. MONITOR	UVIM-CAL	UVIM-CAL
2	2	LAMP SLEEVE KIT	QSK-28	QSK-38
3	2	LAMP KIT	LK-28	LK-38
4	1	BALLAST KIT	BK-120-2, OR BK-230-2	BK-120-2, OR BK-230-2
5	4	LAMP SLEEVE O-RING	SEE NOTE 1	SEE NOTE 1
6	4	END COUPLER	SEE NOTE 2	SEE NOTE 2
7	4	LOCKING RING	SEE NOTE 2	SEE NOTE 2
8	4	LAMP O-RING	SEE NOTE 1	SEE NOTE 1
9	4	LAMP WIRE WITH CONNECTOR	SEE NOTE 2	SEE NOTE 2
10	4	LAMP CAP	SEE NOTE 2	SEE NOTE 2

PROPRIETARY AND CONFIDENTIAL
THE INFORMATION CONTAINED IN THIS DRAWING IS THE SOLE PROPERTY OF ULTRAVIOLET SCIENCES. ANY REPRODUCTION IN PART OR AS A WHOLE WITHOUT THE WRITTEN PERMISSION OF ULTRAVIOLET SCIENCES IS PROHIBITED.

NEOTECH AQUA SOLUTIONS, INC.

SIZE	DWG. NO.	REV
B	2020	D
SCALE: 3:16		SHEET 2 OF 2

10.36 - P1 – PRAHER CHECK VALVE

K6 PVC Wafer Check Valve

PVC

SIZES: 2" – 8" (DN50 to 200) (d63 to d225)

SEALS: EPDM, VITON, or Teflon (FEP) encapsulated

SPRING: 316 Stainless Steel, Hastelloy

Features:

- No spacers required in both ANSI and DIN piping
- Engineered and molded with improved hinge and spring design
- Improved flow rates
- Easy spring installation without any special tool requirements
- Maximum operating temp 40°C - 104°F
- Full seal at maximum 0.3 bar / 4.5 psi backpressure
- New disc design with conical sealing surface for highest reliability and maximum operating cycles
- Flooded flapper hinge pins avoid sediment build up
- Cylindrically embedded flapper hinge pin for optimal stress absorption
- Easy installation due to integrated flange bolt guides for DIN2501 PN10 and ANSI Class 150
- Integrated installation lifting eyelet with FLOW ARROW with defined breaking point for easy removal after installation.
- Can be installed horizontally or vertically
- Rated to 150 psi on all sizes

Sample Specifications

- All Praher K6 thermoplastic wafer check valves shall be available in sizes 2" though 8" with maximum operating pressure of 150 psi at 72° F, non-shock.
- The valve does not require a spacer for full disc opening performance in SCH 80 pipes.
- Valves shall have a single disc design suitable for horizontal and vertical installations.
- Valves shall have a self-cleaning disc design with contoured inlet and improved disc seating (sealing) characteristics.
- Valves shall have a flooded disc hinge pin pocket for improved life cycle performance in contaminated fluids.
- Valves shall be equipped with replaceable 316 Stainless Steel spring for horizontal installations.
- Valves shall be of round body design with incorporated notches for flange bolt alignment and incorporated valve lifting eyelet with flow direction arrow.
- All seals shall be EPDM (NSF61) or FKM (Viton)
- All K6 series thermoplastic wafer check valves shall be manufactured with PVC (ASTM D1784, Cell Classification 12454) with NSF 14/61 approval.
- Valves shall be wafer style conforming to ASME/ANSI B16.1 for 150 Lbs. and DIN flanges.

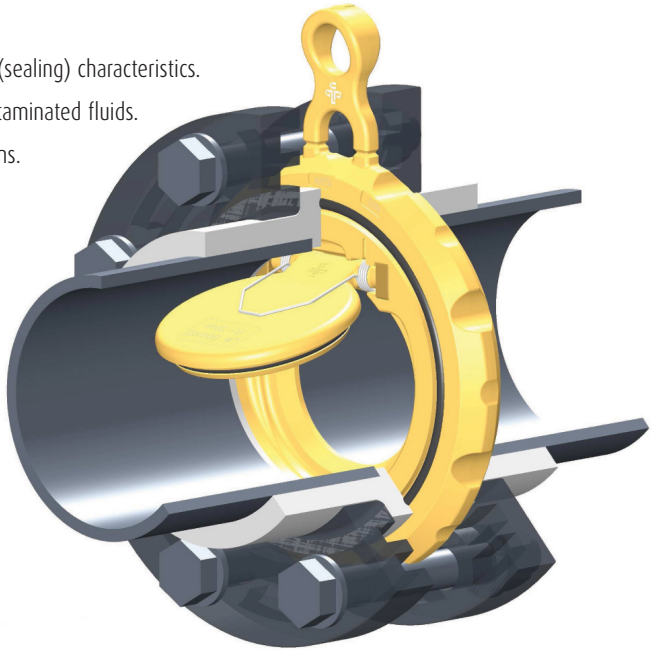

Installation Precautions:

- No direct mounting onto a pump, bend or elbow
- Install a minimum of five times the nominal pipe diameter away from pumps, bends or elbows. (Example: Install a 4" valve 20" away from a pump discharge.)

Note: Do not use valves without springs for pulsating applications

DIMENSIONS: INCHES										
Size	DN	d	ØA	B	C	LK DIN	ØD	LK ANSI	ØE	ØF
2"	50	63	4.29	0.71	6.28	4.92	0.71	4.75	0.75	1.30
3"	80	90	5.75	0.79	7.89	6.30	0.71	6.00	0.75	2.09
4"	100	110	6.89	0.91	9.34	7.09	0.71	7.50	0.75	2.87
6"	150	160	8.78	1.18	11.37	9.45	0.87	9.50	0.87	4.33
8"	200	225	11.02	1.34	13.71	11.61	0.87	11.75	0.87	5.91

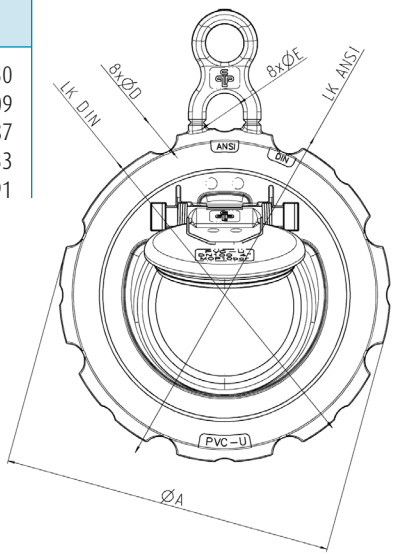

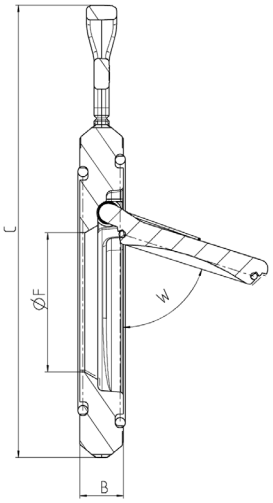

Tightening torque of screws for flange connections

TORQUE (INCH LBS.)	
Size	Torque
2"	174
3"	174
4"	174
6"	261
8"	304.50

DIMENSIONS: DEGREES			
	Opening angle (W)		Cv Values for Sch.80 pipe
Size	Sch. 40 pipe	Sch. 80 pipe	
2"	79.5		48.7
3"	79.5	72	121.8
4"	76	69	252.8
6"	78.5	71	788
8"	73	66	1095

Valve centering in the piping system:

The valve will be centered by the flange bolts. ANSI and DIN markings on the valve identify which pattern matches which flange system.

The diagram shows the different bolt patterns in relation to the valve.

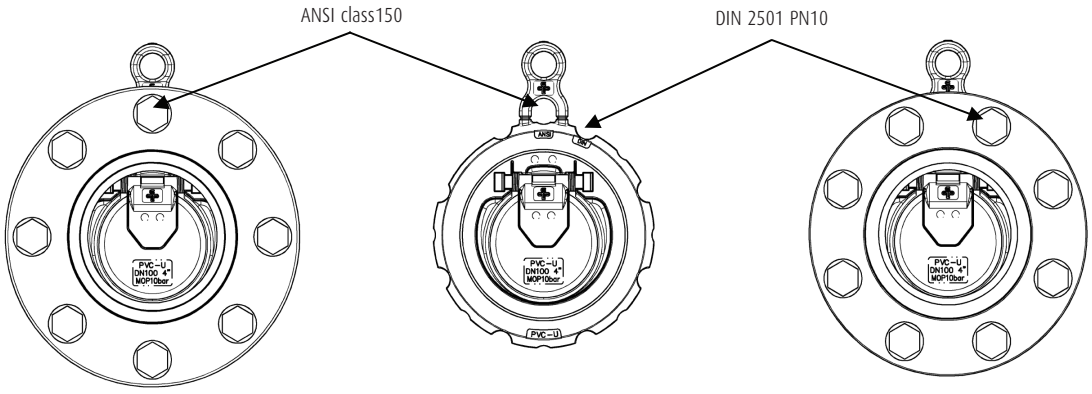

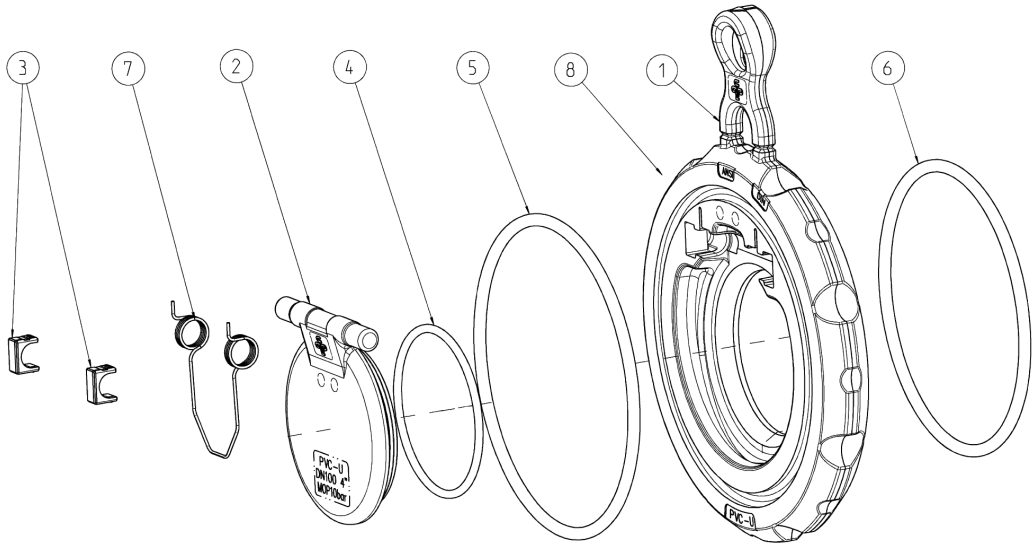

Parts List/Diagram

1. Body
2. Flapper
3. Flapper clip
4. Flapper O-Ring
5. Body O-Ring, front
6. Body O-Ring, back
7. SS Spring
8. Label

Praher Canada Products Ltd.
Tel 705.720.2753
Fax 705.725.0444
101 Saunders Road, Barrie
Ontario, Canada L4N 6E7
www.prahervalves.com

Distributed by:

PRAHER VALVES 40 YEARS OF EVOLUTION

ISO 9001-2000

Proudly Manufactured in North America and Austria

©Praher Canada Products Ltd. 2012

Printed in Canada
07-16-12 Rev.1

10.37 - P2 – PRIMARY FLUID CALIBRATION COLUMN

ACCUDRAW® PVC Calibration Instructions

Note: ***Before starting either of the calibration procedures below, ensure that the pump is primed and void of any trapped air.***

Using the USGPH scale: (scale is based on **time**, in one (1) minute volume discharge)

1. Fill the calibration to the top "0" mark on the USGPH scale.
2. Close isolation valve (#2) from supply tank, open isolation valve (#1) below cylinder and start the pump.
3. Use a stopwatch to measure the time of one (1) minute (60 seconds) and record the volume dispensed by the metering pump, using the draw down scale.
4. Adjust the pump volume control higher or lower to meet with your desired output.
5. Repeat above steps 1 through 4, until the desired output is met.
6. Divide the measured USGPH number by 60 to determine the **USGPM volume**, if required.

If you wish to shorten the time of dispensing for calibration by one half (1/2) or one quarter (1/4), you must multiply the measured volume by the same number used to divide the time by.

e.g. 10 USGPH in 1 minute equals
5 USGPH X 2 in 30 seconds or
2.5 USGPH X 4 in 15 seconds

Using the ml scale: (scale is based on **volume** pumped, over any given time)

1. Fill the calibration cylinder to the top "0" mark on the ml scale.
2. Close isolation valve (#2) from supply tank, open isolation valve (#1) below cylinder and start the pump.
3. Use a stopwatch to measure the time it takes to pump down a given volume (ml) in 60 seconds.
4. Multiply the volume by 60 to determine the **ml per hour** volume, if required.
5. Adjust the pump volume control higher or lower to meet with your desired output.
6. Repeat above steps 1 through 5, until the desired output is met.

If you wish to shorten the time of dispensing for calibration by one half (1/2) or one quarter (1/4), you must multiply the volume by the same number used to divide the time by to determine ml per minute or hour.

e.g. 100 ml in 60 seconds equals
50 ml X 2 in 30 seconds or
25 ml X 4 in 15 seconds

Typical Installations ("A" and "B")

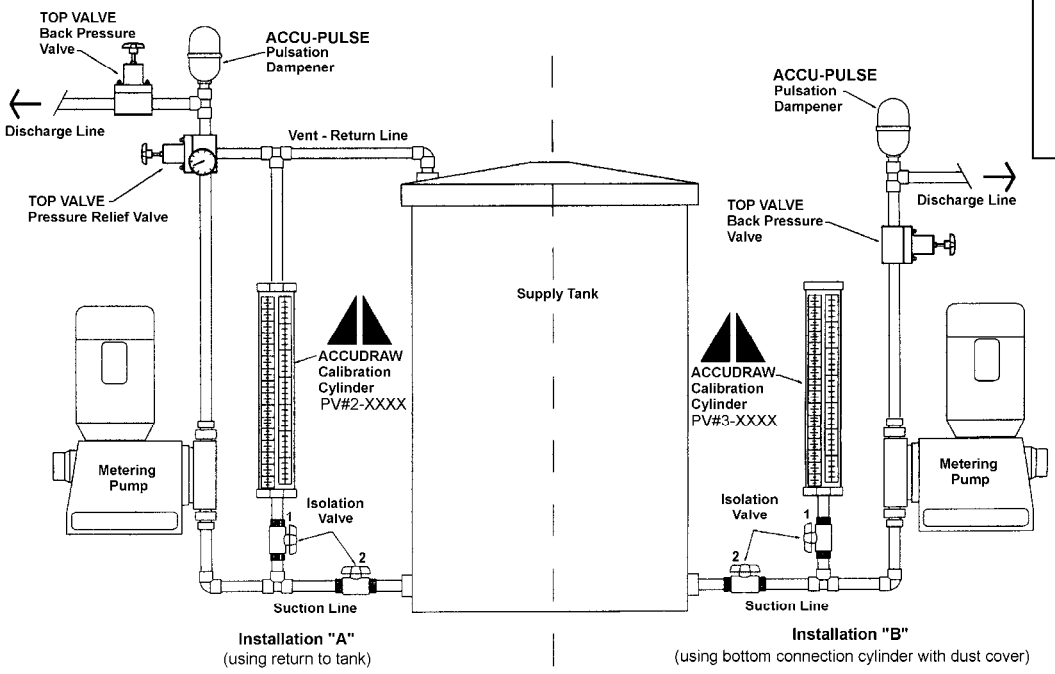

Conversion Factors
1ml = 1 cc
1000 ml – 1 liter
ml/sec x 60 = ml/min
1 US gal/min x 0.063 = liters/sec
1 US gal = 3.786 liters

Caution:
Do not use as a Pressure Vessel.

PRIMARY FLUID SYSTEMS INC.

Call Toll Free 1-800-776-6580
Tel: (905) 333-8743 Fax: (905) 333-8746

E-Mail: primary@ primaryfluid.com
www.primaryfluid.com

® Registered Trade Mark of Primary Fluid Systems Inc.

Metering Pump Accessories Save $$$$

Prevent unsafe and inefficient systems by design.

ACCUDRAW Calibration Cylinders

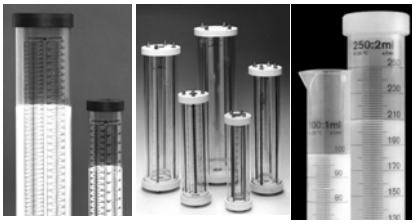

PVC **Glass** **Poly**

- *PVC, glass, polypropylene*
- *translucent, chemical resistant*
- *coloured graduations and lettering*
- *threaded or socket connections*
- *standard sizes 100 ml to 20,000 ml*

Custom built in other sizes and materials.

TOP VALVE Back Pressure/Pressure Relief

- *long life diaphragm*
- *range of 0 – 150 PSIG*
- *air release, optional gauge port*
- *PVC, CPVC, PVDF, Teflon, polypropylene, stainless, Alloy 20 and Hastelloy C*
- *7 sizes ¼" – 2" NPT*
- *colour coded handles indicate size*

Designed to enhance the <u>accuracy</u> and <u>safety</u> of your metering pumps.

ACCU-PULSE Pulsation Dampeners

Designed to remove pulsating flows from positive displacement pumps.

- *increase system efficiency and pump life*
- *decrease maintenance and costs*
- *protect pipes, meters, valves and instrumentation from pulsation and vibration*
- *ensure meter accuracy, longevity and repeatability*
- *prevent foaming and splashing*
- *extensive range of materials and sizes*
- *lightweight, compact design*

Typical Metering Pump System

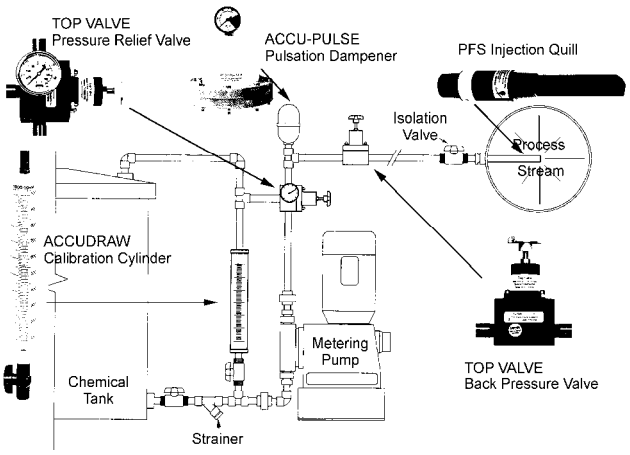

AutoCad drawings available from our web site.
Visit www.primaryfluid.com

PFS Injection Quills

Designed to inject chemical into the center stream of process.

- *provides for a more homogenous mix in the pipeline*
- *built-in checks to prevent back siphoning*
- *2 sizes 6" and 8" length*
- *PVC, CPVC, PVDF, polypropylene, stainless and Hastelloy C*
- *pressure to 3000 PSIG*
- *temperature to 260°C (500°F)*

Custom built in other sizes and materials.

Accu-Vent

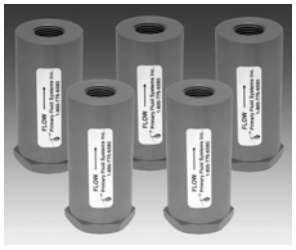

Designed to automatically vent gases and vapours.

- *vents gases and vapors released from Sodium Hypochlorite, Sulfuric Acid & Hydrogen Peroxide*
- *CPVC (Corzan) and Viton corrosion resistant wetted materials of construction*
- *specially designed float material automatically vents built up gases on system start up and under working pressure*
- *standard 1/2" or 3/4" NPT threaded connections or optional socket weld*
- *available in other materials*

PFS Corporation Stops

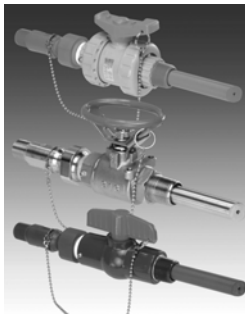

Designed to inject chemical into the center stream of process.

- *isolation valve allows for ease of maintenance*
- *available in 6 materials of construction*
- *wetted components have comparable or greater chemical resistance than quill construction material*
- *standard and custom lengths available*
- *connection in NPT, metric or flanged*

Custom built in other sizes & materials.

Call Toll Free 1-800-776-6580
Tel: (905) 333-8743 Fax: (905) 333-8746

10.38 - P3 – PROMINENT DOSING PUMP

Operating instructions

Solenoid Metering Pump
gamma/ X, GMXa

EN

Please carefully read these operating instructions before use. · Do not discard.
The operator shall be liable for any damage caused by installation or operating errors.
The latest version of the operating instructions are available on our homepage.

Part no. 984586 **Original Operating Instructions (2006/42/EC)** BA G 049 03/16 EN

Supplementary information

Fig. 1: Please read!

Read the following supplementary information in its entirety! Should you already know this information, you will benefit more from referring to the operating instructions.

The following are highlighted separately in the document:

- Enumerated lists

⟶ Instructions

⇨ Outcome of the instructions

↳ *'State the identity code and serial number' on page 2*: Links to points in this chapter

- refer to ... : References to points in this document or another document

[Keys]

'Menu level 1 ➔ Menu level 2 ➔ Menu level ...': Menu paths

'Software interface text'

Information

This provides important information relating to the correct operation of the unit or is intended to make your work easier.

Safety Information

Safety information is identified by pictograms - see "Safety Chapter".

State the identity code and serial number

Please state the identity code and serial number, which you can find on the nameplate or in the menu under *'Setting / Menu ➔ Information'* when you contact us or order spare parts. This enables the unit type and material versions to be clearly identified.

Table of contents

1 Identity code 5

2 About this pump 7

3 Safety chapter 8

4 Storage, Transport and Unpacking 13

5 Overview of Equipment and Control Elements 14

5.1 Overview of Equipment 14

5.2 Control Elements 15

5.2.1 Control Elements 15

5.2.2 Key Functions 18

6 Functional Description 19

6.1 Liquid End 19

6.2 Drive unit 19

6.3 Capacity 21

6.4 Self-Bleeding 21

6.5 Operating Modes 21

6.6 Functions 22

6.7 Relay (Options) 22

6.8 LED Displays 23

6.9 Hierarchy of Operating Modes, Functions and Fault Statuses 23

7 Assembly 24

8 Installation, hydraulic 26

8.1 Installing hose lines 27

8.1.1 Installation of Metering Pumps Without Bleed Valve 27

8.1.2 Installation of Metering Pumps With Bleed Valve 30

8.1.3 Installation of Metering Pumps With Self-bleeding (SEK Type) 30

8.2 Basic installation notes 31

9 Installation, Electrical 33

9.1 Supply voltage connector - mains voltage 34

9.2 Description of the Terminals 34

9.2.1 "External control" Terminal 34

9.2.2 "Level switch" terminal 35

9.2.3 "Dosing monitor" terminal 36

9.2.4 "Diaphragm rupture indicator" terminal 36

9.2.5 Relay 37

10 Basic Set-up Principles 41

10.1 Basic Principles for Setting up the Control 41

10.2 Checking adjustable variables 43

10.3 Changing to set up mode 43

11 Set Up / *'Menu'* 44

11.1 *'Information'* 44

11.2 *'Settings'* 44

11.2.1 *'Operating Mode'* 44

11.2.2 *'Automatic'* 49

11.2.3 *'Stroke length'* 49

11.2.4 Metering 50

11.2.5 Concentration 54

11.2.6 Calibrate 60

11.2.7 System 62

11.2.8 Inputs/Outputs 62

11.2.9 Bleed 66

11.2.10 *'Priming Time'* ... 67
11.2.11 *'Time'* ... 67
11.2.12 *'Date'* ... 67
11.3 Timer ... 68
11.3.1 Timer Activation ... 68
11.3.2 Setting the Timer ... 68
11.3.3 Clear All ... 70
11.3.4 Example ... 70
11.4 *'Service'* ... 70
11.4.1 *'Access Protect.'* ... 70
11.4.2 *'Password '* ... 71
11.4.3 *'Clear Counter'* ... 71
11.4.4 *'Diaphragm Replacement'* ... 72
11.4.5 *'Display'* ... 72
11.4.6 *'Reset to Factory Settings'* ... 72
11.5 *'Language'* ... 72
12 Operation ... **73**
12.1 Manual operation ... 73
13 Maintenance ... **75**
14 Repairs ... **77**
14.1 Cleaning Valves ... 78
14.2 Replacing the Diaphragm ... 79
14.3 Cleaning the Diaphragm Rupture Indicator ... 80
15 Troubleshooting ... **82**
15.1 Faults Without a Fault Message ... 82
15.2 Fault Messages ... 83
15.3 Warning Messages ... 84
15.4 All Other Faults ... 84
16 Decommissioning ... **85**
17 Technical Data ... **87**
17.1 Performance Data ... 87
17.2 Accuracy ... 88
17.2.1 Standard Liquid End ... 88
17.2.2 Self-Bleeding Liquid End ... 88
17.3 Viscosity ... 88
17.4 Material specifications ... 89
17.5 Electrical Data ... 89
17.6 Temperatures ... 90
17.7 Climate ... 90
17.8 Degree of Protection and Safety Requirements ... 90
17.9 Compatibility ... 90
17.10 Shipping Weight ... 91
17.11 Sound pressure level ... 91
18 Exploded Drawings and Ordering Information ... **92**
18.1 Exploded drawings ... 92
18.2 Ordering Information ... 124
19 Dimensional Drawings ... **125**
20 Diagrams for Setting the Capacity ... **134**
21 EC Declaration of Conformity for Machinery ... **137**
22 Operating/Set-up Overview of the gamma/ X ... **138**
23 Operating Menu of gamma/ X, Entire Unit ... **140**
24 Continuous Displays and Secondary Displays ... **144**
25 Index ... **146**

1 Identity code

Product range gamma/ X												
GMXa	Type											
	- - - -	Performance data and type - see nameplate										
		Dosing head material										
		PP	Polypropylene									
		NP	Clear acrylic									
		PV	PVDF									
		TT	PTFE + carbon									
		SS	Stainless steel									
			Seal material									
			B	FPM								
			E	EPDM								
			T	PTFE								
				Dosing head design								
				0	Without bleed valve, without valve spring							
				1	Without bleed valve, with valve spring							
				2	With bleed valve, without valve spring							
				3	With bleed valve, with valve spring							
				4	Without bleed valve, with valve spring for more high-viscosity media							
				9	Self-bleeding with bypass (SEK)							
					Hydraulic connector							
					0	Standard connection in line with technical data						
					5	Connector for 12/6 hose, suction side standard						
					9	Connector for 10/4 hose, discharge side only, suction side standard						
						Diaphragm rupture indicator						
						0	Without diaphragm rupture indicator					
						1	With diaphragm rupture indicator, optical sensor					
							Design					
							0	Hous. RAL5003 / Hood RAL2003				
							M	modified				
								Logo				
								0	with ProMinent logo			
									Electrical connection			
									U	Universal control 100-230 V ±10%, 50/60 Hz		
										Cable and plug		
										A	2 m European	
										B	2 m Swiss	
										C	2 m Australian	
										D	2 m USA / 115 V	
										E	2 m Great Britain	

Product range gamma/ X

1	2 m open end
..	...

Relay, pre-set to ...

0	No relay	-
1	1 x changeover contact 230 V – 8 A	Fault indicating relay (N/C)
4	2 x N/O 24 V – 100 mA	as 1 + pacing relay
C	1 x N/O 24 V – 100 mA, and 1 x 4-20 mA output	As 1 + 4-20 mA output
..	...	

Accessories

0	without accessories
1	With foot and injection valve, 2 m suction line, 5 m metering line
4	Multifunctional valve and accessories

Control version

0	Manual + external contact with pulse control
3	Manual + external contact with pulse control + analogue 0/4-20mA
4	As 0 + 4-week process timer
5	As 3 + 4-week process timer
C	As 3 + CANopen
R	As 3 + PROFIBUS® interface, M12

Dosing monitor

0	Dynamic dosing monitor

Remote stop / Remote control

0	Without Bluetooth
1	With Bluetooth

Language

EN	German
EN	English
ES	Spanish
FR	French
IT	Italian
...	...

2 About this pump

About this pump

Pumps in the ProMinent gamma/ X product range are microprocessor-controlled solenoid metering pumps with the following characteristics:

- Simple adjustment of the capacity directly in l/h
- Available material combinations: PP, PVDF, clear acrylic, PTFE and stainless steel
- Special dosing head designs for gaseous and high-viscosity media
- Illuminated LC display and 3-LED display for operating, warning and error messages, visible from all sides
- Factor with external contact control 99:1 ... 1:99
- Batch operation with max. 99,999 strokes/start pulse
- Input of concentration for simple adjustment with volume-proportional metering tasks
- Stroke rate adjustment in 1 stroke/hour increments from 0 ... 12,000 strokes/h
- Electronic stroke length adjustment, continuous from 0 ... 100% (recommended 30 ... 100%)
- Connector for 2-stage level switch
- External control via 0/4-20 mA standard signal with adjustable assignment of signal value to stroke rate
- Optional 4-20 mA output for remote transmission of stroke length and stroke rate
- Universal power supply unit 100 V - 230 V, 50/60 Hz
- Optional 230 V relay module, can also be retrofitted easily and securely
- Optional 24 V combined relay, can also be retrofitted easily and securely

The hydraulic parts of the gamma/ X are identical to those of the Beta® (not with types 0220, 0424 and 0245).

3 Safety chapter

Identification of safety notes

The following signal words are used in these operating instructions to denote different severities of danger:

Signal word	Meaning
WARNING	Denotes a possibly dangerous situation. If this is disregarded, you are in a life-threatening situation and this can result in serious injuries.
CAUTION	Denotes a possibly dangerous situation. If this is disregarded, it could result in slight or minor injuries or material damage.

Warning signs denoting different types of danger

The following warning signs are used in these operating instructions to denote different types of danger:

Warning signs	Type of danger
	Warning – automatic start-up.
	Warning – high-voltage.
	Warning – danger zone.

Intended Use

- Only use the pump to meter liquid feed chemicals.
- Only use the pump after it has been correctly installed and started up in accordance with the technical data and specifications contained in the operating instructions.
- Observe the general limitations with regard to viscosity limits, chemical resistance and density - see also ProMinent resistance list in the Product Catalogue or at www.prominent.com!
- All other uses or modifications are prohibited.
- The pump is not intended for the metering of gaseous media and solids.
- The pump is not intended for the metering of flammable media without implementing suitable protective measures.
- The pump is not intended for the metering of explosive media.
- The pump is not intended for operation in areas at risk from explosion.
- The pump is not intended for exterior applications without the implementation of suitable protective measures.
- The pump should only be operated by trained and authorised personnel, see the following "Qualifications" table.
- You are obliged to observe the information contained in the operating instructions at the different phases of the unit's service life.

Safety Information

WARNING!

Warning about personal and material damage

The pump can start to pump, as soon as it is connected to the mains voltage.

– Install an emergency cut-off switch in the pump power supply line or integrate the pump in the emergency cut-off management of the system.

WARNING!

Warning of personal injury and material damage

The pump can start pumping as soon as it has cooled down after the error *'temperature'*.

– Take this into account with the pump and your installation.

WARNING!

Danger of electric shock

A mains voltage may exist inside the pump housing.

– If the pump housing has been damaged, you must disconnect it from the mains immediately. It may only be returned to service after an authorised repair.

WARNING!

Warning of dangerous or unknown feed chemical

Should a dangerous or unknown feed chemical be used: It may escape from the hydraulic components when working on the pump.

– Take appropriate protective measures before working on the pump (e.g. safety glasses, safety gloves, ...). Observe the safety data sheet for the feed chemical.
– Drain and flush the liquid end before working on the pump.

WARNING!

Fire danger

When pumping inflammable media the operator must take suitable safety precautions.

WARNING!

Danger from hazardous substances!

Possible consequence: Fatal or very serious injuries.

Please ensure when handling hazardous substances that you have read the latest safety data sheets provided by the manufacture of the hazardous substance. The actions required are described in the safety data sheet. Check the safety data sheet regularly and replace, if necessary, as the hazard potential of a substance can be re-evaluated at any time based on new findings.

The system operator is responsible for ensuring that these safety data sheets are available and that they are kept up to date, as well as for producing an associated hazard assessment for the workstations affected.

CAUTION!

Warning of feed chemical spraying around

Feed chemical can spray out of the hydraulic components if they are manipulated or opened due to pressure in the liquid end and adjacent parts of the system.

– Disconnect the pump from the mains power supply and ensure that it cannot be switched on again by unauthorised persons.
– Depressurise the system before commencing any work on hydraulic parts.

CAUTION!

Warning of feed chemical spraying around

The metering pump can generate a multiple of its rated pressure. Hydraulic parts can rupture if a discharge line is blocked.

– Correctly install a relief valve in the discharge line downstream of the metering pump.

CAUTION!

Warning of feed chemical spraying around

An unsuitable feed chemical can damage the wetted parts of the pump.

– Take into account the resistance of the wetted materials when selecting the feed chemical - see the ProMinent Product Catalogue or visit our homepage.

CAUTION!

Danger of injury to personnel and material damage

The use of untested third party components can result in injury to personnel and material damage.

– Only fit parts to metering pumps that have been tested and recommended by ProMinent.

CAUTION!

Danger from incorrectly operated or inadequately maintained pumps

Danger can arise from a poorly accessible pump due to incorrect operation and poor maintenance.

– Ensure that the pump is accessible at all times.
– Adhere to the maintenance intervals.

CAUTION!

Danger from incorrect dosing

The metering behaviour of the pump changes if a different liquid end size is fitted.

– Reprogram the pump in the *'Menu / Information ➔ Settings ➔ System ➔ Change head type'* menu.

CAUTION!

Warning against illegal operation

Observe the regulations that apply where the device is installed.

Isolating protective equipment

- Covers for the slots for relays and optional modules - see the chapter entitled "Overview of Equipment and Control Elements"

Customers should only remove the cover for the slots for relays and optional modules and/or a relay or optional module in line with the supplementary instructions for the relays and optional modules.

Customer should only remove the dosing head in accordance with the "Repair" chapter.

Only the ProMinent Service department is authorised to open the housing and the hood (housing the control elements).

Information in the event of an emergency

In an emergency, either disconnect the mains plug, press *[Start/Stop]* or press the Emergency Stop switch installed on the customer's side or disconnect the pump from the mains/power supply in line with the Emergency Stop management guidelines for your system.

If feed chemical escapes, additionally ensure that the pump's hydraulic environment is at atmospheric pressure. Adhere to the material safety data sheet for the feed chemical.

Qualification of personnel

Task	Qualification
Storage, transport, unpacking	Instructed person
Assembly	Technical personnel, service
Planning the hydraulic installation	Qualified personnel who have a thorough knowledge of metering pumps
Hydraulic installation	Technical personnel, service
Installation, electrical	Electrical technician
Operation	Instructed person
Maintenance, repair	Technical personnel, service
Decommissioning, disposal	Technical personnel, service
Troubleshooting	Technical personnel, electrical technician, instructed person, service

Explanation of the table:

Qualified personnel

A qualified employee is deemed to be a person who is able to assess the tasks assigned to him and recognise possible dangers based on his/her technical training, knowledge and experience, as well as knowledge of pertinent regulations.

Note:

A qualification of equal validity to a technical qualification can also be gained by several years of employment in the relevant field of work.

Electrical technician

An electrical technician is able to complete work on electrical systems and recognise and avoid possible dangers independently based on his/her technical training and experience, as well as knowledge of pertinent standards and regulations.

The electrical technician should be specifically trained for the working environment in which he is employed and know the relevant standards and regulations.

An electrical technician must comply with the provisions of the applicable statutory directives on accident prevention.

Instructed person

An instructed person is deemed to be a person who has been instructed and, if required, trained in the tasks assigned to him/her and possible dangers that could result from improper behaviour, as well as having been instructed in the required protective equipment and protective measures.

Service

The Service department refers to service technicians, who have received proven training and have been authorised by ProMinent to work on the system.

Sound pressure level

Sound pressure level LpA < 70 dB according to EN ISO 20361

at maximum stroke length, maximum stroke rate, maximum back pressure (water)

4 Storage, Transport and Unpacking

Safety Information

WARNING!

Only return metering pumps for repair in a cleaned state and with a flushed liquid end - refer to "Decommissioning!

Only return metering pumps with a completed Decontamination Declaration form. The Decontamination Declaration constitutes an integral part of an inspection / repair order. A unit can only be inspected or repaired when a Declaration of Decontamination Form is submitted that has been completed correctly and in full by an authorised and qualified person on behalf of the pump operator.

The "Decontamination Declaration Form" can be found on our homepage.

CAUTION!

Danger of material damage

The device can be damaged by incorrect or improper storage or transportation!

- The unit should only be stored or transported in a well packaged state - preferably in its original packaging.
- The packaged unit should also only be stored or transported in accordance with the stipulated storage conditions.
- The packaged unit should be protected from moisture and the ingress of chemicals.

Ambient conditions

Ambient conditions - refer to "Technical Data" chapter.

Scope of delivery

Compare the delivery note with the scope of delivery:

- Metering pump with mains cable
- Connector kit for hose/pipe connection (optional)
- Product-specific operating instructions with EC Declaration of Conformity
- Optional accessories

5 Overview of Equipment and Control Elements

5.1 Overview of Equipment

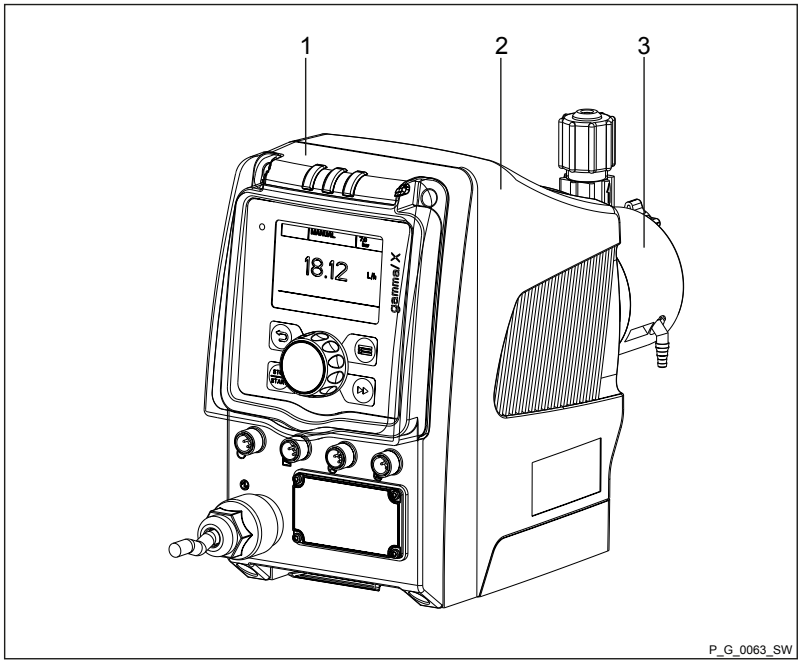

Fig. 2: Overview of equipment, complete

1 Control unit
2 Drive unit
3 Liquid end

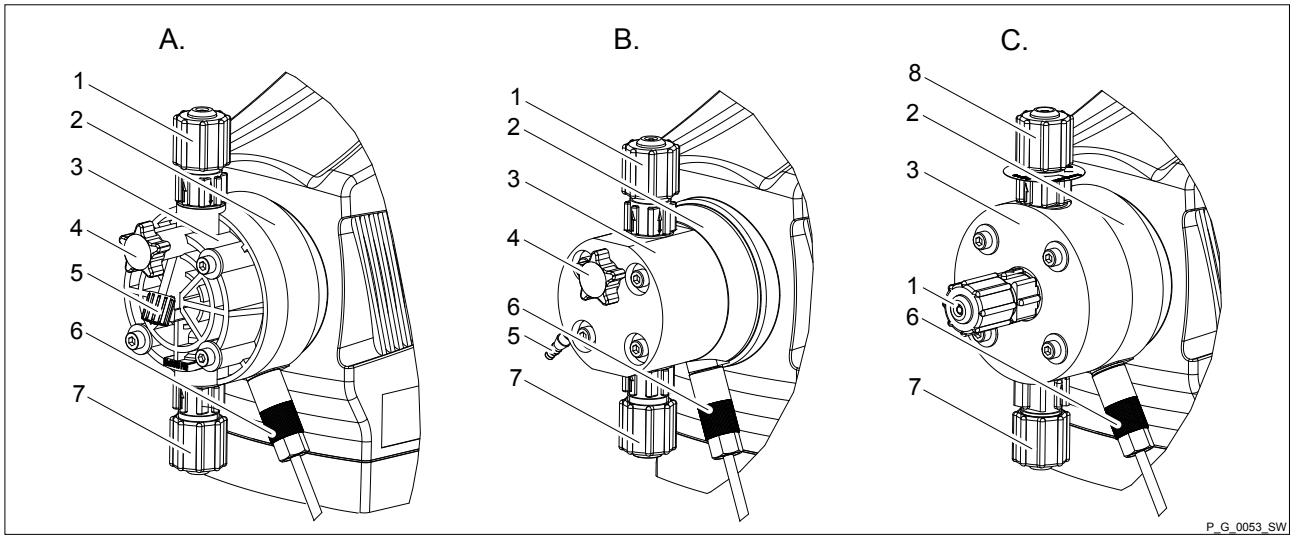

Fig. 3: A. Liquid end with PV bleed valve; B. Liquid end with NP bleed valve; C. Self-bleeding liquid end (SEK)

1 Discharge valve
2 Backplate
3 Dosing head
4 Bleed valve
5 Bypass hose sleeve
6 Diaphragm rupture indicator (optional)
7 Suction valve
8 Bleed valve, self-bleeding

5.2 Control Elements

Control elements, overview

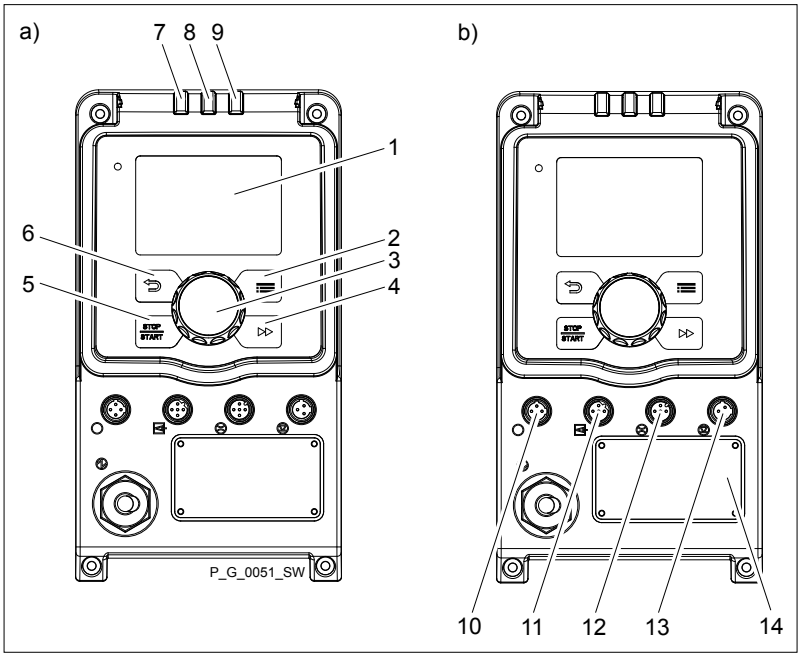

Fig. 4

1 LCD screen
2 *[Menu]* key
3 Clickwheel
4 *[Priming]* key
5 *[STOP/START]* key
6 *[Back]* key
7 Fault indicator (red)
8 Warning indicator (yellow)
9 Operating indicator (green)
10 "Diaphragm rupture indicator" terminal
11 "External control" terminal
12 "Dosing monitor" terminal
13 "Level switch" terminal
14 Slot for relay and optional modules

5.2.1 Control Elements

Use this overview to familiarise yourself with the keys and the other control elements on the pump!

Pressure display, identifier and fault displays on the LCD screen

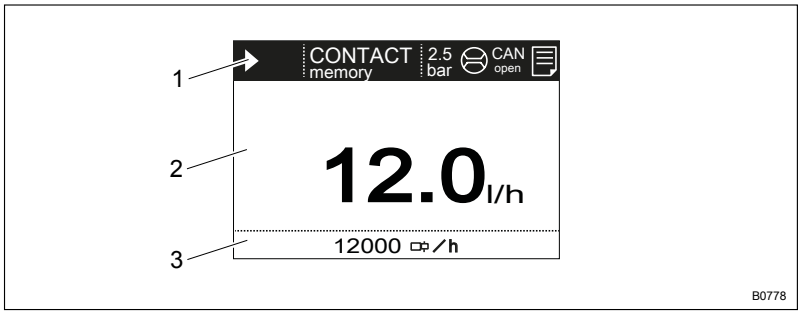

Fig. 5: Construction of continuous display

1 Status bar
2 Continuous display, central area
3 Secondary display

Refer to the chapter entitled "Main Displays and Secondary Displays" in the Appendix for the different main displays and secondary displays.

The LCD screen supports the operation and adjustment of the pump by providing different information and identifiers:

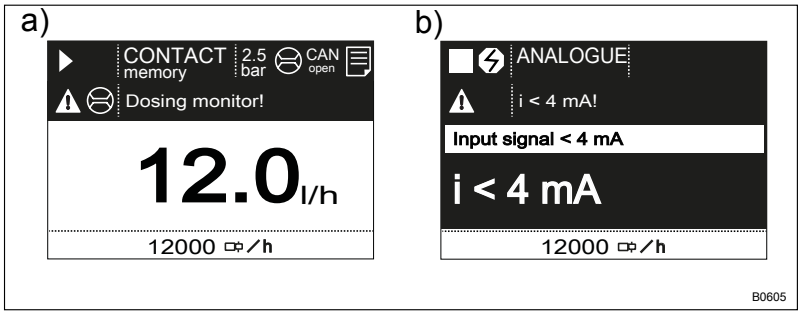

Fig. 6: a) Continuous display with warning message; b) Continuous display with fault message. Explanation of the symbols in the following tables.

The above Figure, Part a) shows that:

- The pump is in operation
- Is in *'Contact'* operating mode with "memory" stroke memory.
- The average system pressure is 2.5 bar
- A dosing monitor is connected
- A CAN module is being used
- A log entry has been made
- A warning message for the *'dosing monitor'* is pending
- The capacity of 12.0 l/h has been set
- The stroke rate is 12,000 strokes / h

Pressure display

Display	Meaning
2.5 bar	Displays the average system pressure

Identifier and error displays:

Identifier	Meaning
	The pump is working or waiting for a starting signal.
	The pump was manually stopped using the [STOP/START] key.
	The pump was remotely stopped (Pause) - via the "External" terminal.
	The pump was stopped by an error.
	Only with cyclical batch metering: the pump waits for the next cycle.
	Only with *'Access. protect'*: the pump software is locked.
'AUX'	The pump is currently pumping at auxiliary capacity and/or auxiliary frequency.
'memory'	Only in *'CONTACT'* and *'BATCH'* operating modes: The auxiliary function "Stroke memory" has been set.
	The pump is in *'ANALOGUE'* operating mode. The *'Curve ➔ linear'* type of processing is set.
	The pump is in *'ANALOGUE'* operating mode. The *'Curve ➔ Upper side band'* type of processing is set.
	'Metering ➔ Discharge stroke ➔ optimum' metering profile has been set.
	'Metering ➔ Discharge stroke ➔ fast' metering profile has been set.
	'Metering ➔ Discharge stroke ➔ sine mode' metering profile has been set.
	'Metering ➔ Discharge stroke ➔ continuous' metering profile has been set.
	'Metering ➔ Discharge stroke ➔ DFMa' metering profile has been set.
	'Metering ➔ Discharge stroke ➔ normal' metering profile has been set.
	'Metering ➔ Discharge stroke ➔ HV1' metering profile has been set.

Identifier	Meaning
	'Metering ➔ *Discharge stroke* ➔ *HV2'* metering profile has been set.
	'Metering ➔ *Discharge stroke* ➔ *HV3'* metering profile has been set.
	A dosing monitor "Flow Control" is connected.
	A diaphragm rupture indicator is connected.
	The pump is in the *'Menu'* (Set up).

Further explanations can be found in the "Troubleshooting" chapter.

The pump only shows the metering volume and the capacity in the calibrated state in l or l/h or in gal or gal/h.

5.2.2 Key Functions

Key	Application	In the continuous displays	In the menu
[Back]	press	-	Move back to the previous menu point (or a continuous display) - without saving
Press *[STOP/ START]*	press	Stop pump,	Stop pump,
		Start pump	Start pump
[Menu]	press	Move to the menu	Move back to a continuous display
[Priming]	press	Priming	Priming
[Clickwheel]	press	Start batch (only in *'Batch'* operating mode) Acknowledge errors	Move to next menu option (or a continuous display) Confirm entry and save
[Clickwheel]	turn	Switch between the continuous displays	Change figure or change selection

Refer to the "Set-up Basics" chapter to adjust figures

6 Functional Description

6.1 Liquid End

The dosing process is performed as follows: The diaphragm is pressed into the dosing head; the pressure in the dosing head closes the suction valve and the feed chemical flows through the discharge valve out of the dosing head. The diaphragm is now drawn out of the dosing head; the discharge valve closes due to the negative pressure in the dosing head and fresh feed chemical flows through the suction valve into the dosing head. One cycle is completed.

6.2 Drive unit

The diaphragm is driven by an electromagnet, controlled by an electronic control.

Drive technology

The drive technology on the gamma/ X enables the timed progress of the flow to be precisely matched to the requirements of the particular application.

This ensures that the user can set the optimum **discharge stroke** for his application, as required:

Pos.*	Discharge stroke	Application
A.	*'optimum'*	For maximum accuracy when metering and the very best results with internal pressure measurement and special functions.
B.	*'fast'*	For as fast a discharge stroke as possible - the duration of the discharge stroke is dependent on the stroke rate.
C.	*'Sine mode'*	For a long, sine-shaped discharge stroke - the duration of the discharge stroke is dependent on the stroke rate.
D.	*'continuous'*	For a continuous discharge stroke e.g. for bottling processes. The duration of the discharge stroke is dependent on the stroke rate.
E.	*'DFMa'*	For optimum operation with a flow meter DulcoFlow® DFMa.

* see following drawing.

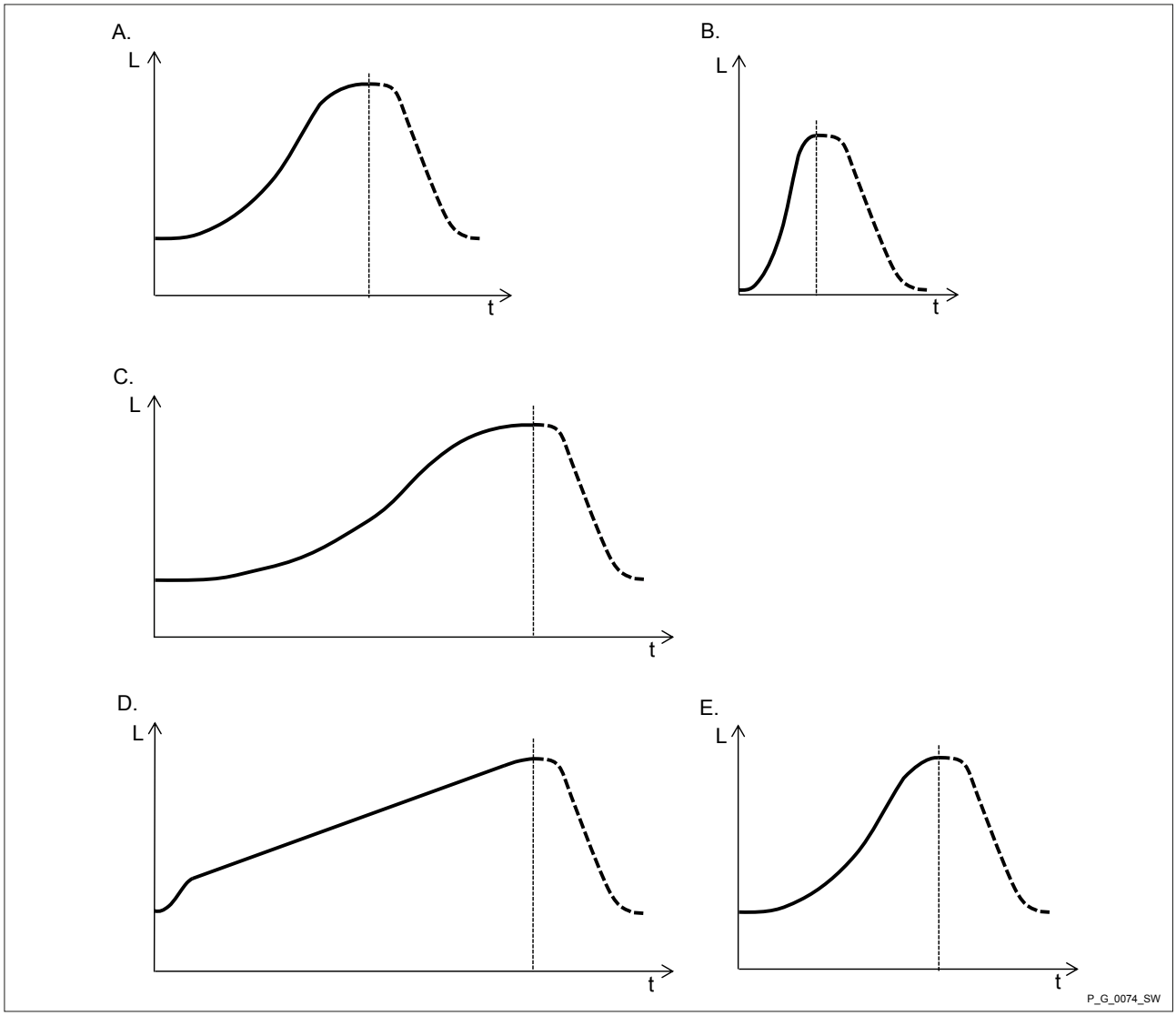

Fig. 7: Discharge stroke metering profiles with stroke L and time t (suction stroke shown as a dotted line)

It is possible to selectively also slow the **suction stroke** with all these metering profiles for the discharge stroke - see . In this way, it is possible to prevent the main cause of inaccurate metering with high viscosity feed chemicals, namely the incomplete filling of the liquid end. With gaseous feed chemicals, the slow suction stroke prevents cavitation and consequently increases dosing precision.

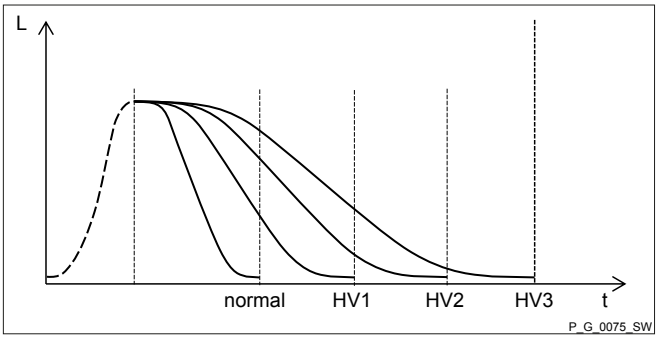

Fig. 8: Suction stroke metering profiles with stroke L and time t

Normal	Normal suction stroke
HV1	Suction stroke for viscous feed chemical
HV2	Suction stroke for average viscosity feed chemical
HV3	Suction stroke for high-viscosity feed chemical

Oscillations in the back pressure in the metering line, which could lead to undesirable variations in the metering volume, are automatically compensated for by the power end/drive. This results in **dosing precision**, which otherwise could only be achieved with complex control circuits.

6.3 Capacity

The capacity set regulates the pump even in *'Automatic'* mode (not with SEK dosing heads).

By contrast, in conventional mode, the stroke length and stroke rate determine the capacity. The stroke length can be adjusted between 0 and 100% via the continuous display or the menu. A metering volume of between 30 to 100% is reproduced as being technically sensible (SEK type: 50 - 100%)! The stroke rate can be set via the menu (not in "Analogue" operating mode) within a range of 0 - 12,000 strokes/h.

6.4 Self-Bleeding

Self-bleeding liquid ends (SEK types) are capable of independent priming when a discharge line is connected and diverting existent air pockets via a bypass. During operation they are also capable of conveying away gases which are produced, independently of the operating pressure in the system. It is also possible to dose precisely in a depressurised state due to the integral back pressure valve.

6.5 Operating Modes

Operating modes are selected via the "Operating modes" menu.

Refer to the "Hierarchy of Operating Modes, Functions and Fault Statuses" for the order of the various operating modes, functions and fault statuses.

"Manual" operating mode

'Manual' operating mode permits you to operate the pump manually.

"Contact" operating mode

This operating mode provides the option of controlling the pump externally by means of potential-free contacts (e.g. by means of a contact water meter). The "Pulse Control" option enables you to preselect the number of strokes (a scaling or transfer factor of 0.01 to 99.99) in the *'Settings'* menu.

"Batch" operating mode

This operating mode provides the option of working with large transfer factors (up to 99,999). Metering can be triggered either by pressing the *[Clickwheel]* or by a pulse received via the "External control" terminal or through a contact or a semiconductor switching element. It is possible to pre-select a metering volume (batch) or a number of strokes using the *[Clickwheel]* in the *'Settings'* menu.

"Analogue" operating mode

The capacity and/or stroke rate is controlled via an analogue current signal via the "External control" socket. The processing of the current signal can be preselected via the control unit.

6.6 Functions

Refer to the "Hierarchy of Operating Modes, Functions and Fault Statuses" for the order of the various operating modes, functions and fault statuses.

The following functions can be selected using the *'Settings'* menu:

"Calibrate" function

The pump can also be operated in a calibrated state in all operating modes if it is to meter extremely precisely. This can be useful with very viscous feed chemicals but less so with feed chemicals with a similar consistency to water. Calibration is retained over the entire stroke rate range and over a stroke length range from 0 - 100%.

"Auxiliary capacity" / "Auxiliary frequency" function

This facilitates the switch-over to a fixed adjustable capacity / stroke rate in the *'menu'* via the "External control" terminal.

"Bleed " function

This permits simple bleeding - without the need for an additional bleed valve. The pump works at maximum stroke rate based on the selected signal in order to transport gas bubbles out of the liquid end.

The following functions are available as standard:

"Flow" function

It monitors the flow after every single stroke, if a dosing monitor is connected and if *'Fast'* is set under *'Settings* ➔ *Metering* ➔ *Discharge stroke'* or *'DFMa'* (for the DulcoFlow®). The number of defective strokes, after which the pump is switched off, can be set in the *'Settings'* menu.

"Level switch" function

Information about the liquid level in the dosing tank is reported to the pump. A two-stage level switch has to be fitted for this purpose, which is connected to the "Level switch" terminal.

"Pause" function

The pump can be remotely stopped via the "External Control" terminal.

"Stop" function

The pump can be stopped without disconnecting it from the mains/power supply by pressing the STOP/START *[STOP/START]* key.

"Priming" function

Priming can be triggered by pressing ⏩ *[Priming]*.

6.7 Relay (Options)

The pump has several connecting options available:

"Fault indicating relay" option

The relay can close a connected power circuit (e.g. for an alarm horn) in the event of warnings or fault messages (e.g. *'Warning level'*).

The relay can be retrofitted through the slot in the front of the pump - refer to the installation instructions for "Retrofitting relays".

"Fault indicating and pacing relay" option

This combined relay can generate a contact with each stroke via its pacing relay in addition to functioning as a fault indicating relay.

The relay can be retrofitted through the slot in the front of the pump.

"Automatic bleed" option

The "Automatic bleed" option is used for controlled bleeding of the liquid end, if the pump has the "Automatic bleed" option. This option can be retrofitted through the slot in the front of the pump and conversion of the dosing head.

There are two versions:

- Version with only 1 relay – to control the electric bleed valve in the dosing head.
- Version with only 2 relays – one relay to control the electric bleed valve in the dosing head and one relay free for other uses.

"mA output" option

The current output I signal indicates the pump's actual calculated metering volume. The relay can be retrofitted through the slot in the front of the pump.

The option also always includes a fault indicating relay or a pacing relay.

6.8 LED Displays

Fault indicator (red)

LED display	Colour	lit	briefly goes out	flashes
Fault indicator	red	A fault message is pending	-	undefined operating status
Warning indicator	yellow	A warning message is pending	-	-
Operating indicator	green	The pump is ready for operation	At each stroke	Stroke rate below 30 strokes / min

6.9 Hierarchy of Operating Modes, Functions and Fault Statuses

The different operating modes, functions and fault statuses have a different effect on whether and how the pump reacts.

The following list shows the order:

1. - Stop
2. - Priming
3. - Error, Pause, Level
4. - Auxiliary capacity / Auxiliary frequency
5. - Manual, Analogue, Contact, Batch

Comments:

re 1 - "Stop" stops everything.

re 2 - "Priming" can take place in any mode of the pump (providing it is functioning).

re 3 - "Error", "Pause" and "Level" stop everything apart from "Priming".

re 4 - The "Auxiliary capacity" and/or "Auxiliary frequency" always has priority over the capacity / stroke rate specified by an operating mode listed under 5.

7 Assembly

Please refer to the online version of the operating instructions on our website for the right dimensional drawings for the pump and mounting plate.

Compare the dimensions on the dimensional drawing with those of the pump and/or mounting plate.

CAUTION!

Danger from incorrectly operated or inadequately maintained pumps

Danger can arise from a poorly accessible pump due to incorrect operation and poor maintenance.

– Ensure that the pump is accessible at all times.
– Adhere to the maintenance intervals.

Capacity too low

The liquid end valves can be disturbed by vibrations.

– *Secure the metering pump so that no vibrations can occur.*

Capacity too low

If the valves of the liquid end are not vertical, they cannot close correctly.

– *Ensure that the suction and discharge valves are upright (with self-bleeding liquid ends: the bleed valve).*

Several metering pumps can be arranged closely together as required.

1. To remove the mounting plate, press down the black flap below the front of the pump a little and press the mounting plate backwards.
2. Assemble the mounting plate on a **level** and load-bearing base surface (with a minimum of 2 bolts and 2 washers!).

   You can also assemble the mounting plate on a **vertical**, level and load-bearing base surface (using 3 bolts and 3 washers!). You then need to rotate the liquid end (vertical valve position!)

   You can also assemble the mounting plate on a **wall bracket** (accessories). 3 alignments are possible.
3. Lock the foot of the metering pump into the mounting plate – see further information Fig. 9.

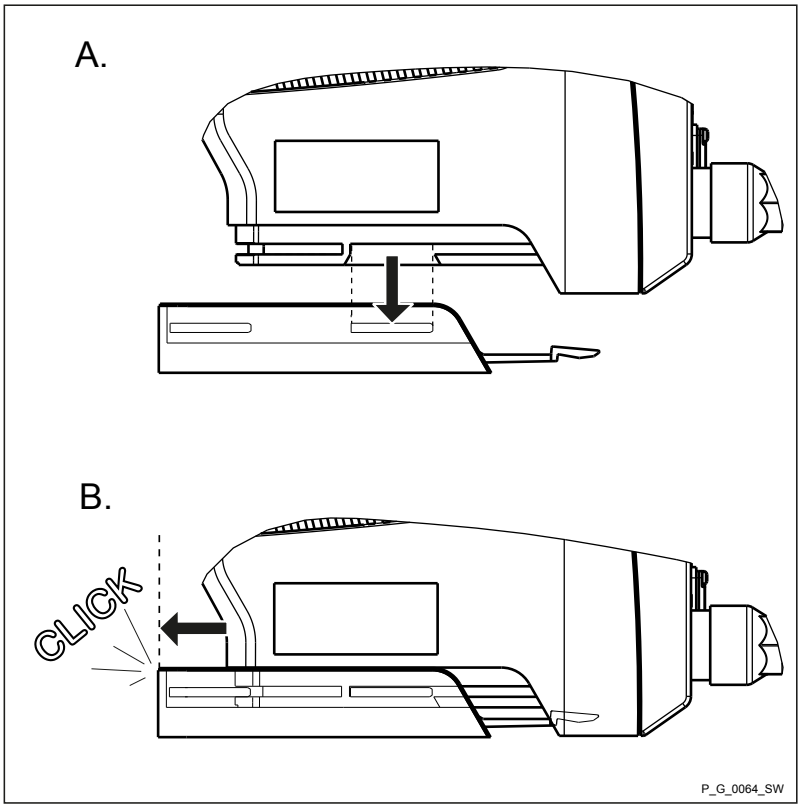

Fig. 9

Suggested bolts and washers for fixing the assembly foot

Bolt	Type	Size	Washer
	DELTA-PT bolt	50 (WN5412/5452)	A5.3 (DIN 125)
	PT bolt	50 (WN1441/1411 KA/B)	-
	Flat-head bolt	M5 (DIN EN ISO 7045)	A5.3 (DIN 125)
	Allen bolt/	M5 (DIN EN ISO 4762)	A5.3 (DIN 125)

8 Installation, hydraulic

Safety Information

CAUTION!

Warning of feed chemical spraying around

An unsuitable feed chemical can damage the wetted parts of the pump.

– Take into account the resistance of the wetted materials when selecting the feed chemical - see the ProMinent Product Catalogue or visit our homepage.

CAUTION!

Warning of feed chemical spraying around

Pumps which are not fully installed hydraulically can eject feed chemicals from the outlet openings of the discharge valves as soon as they are connected to the mains.

– The pump must first be hydraulically installed and then electrically.
– In the event that you have failed to do so, press the *[STOP/START]* button or press the emergency-stop switch.

CAUTION!

Warning of feed chemical spraying around

Feed chemical can spray out of the hydraulic components if they are manipulated or opened due to pressure in the liquid end and adjacent parts of the system.

– Disconnect the pump from the mains power supply and ensure that it cannot be switched on again by unauthorised persons.
– Depressurise the system before commencing any work on hydraulic parts.

CAUTION!

Danger from rupturing hydraulic components

Peak loads during the dosing stroke can cause the maximum permissible operating pressure of the system and pump to be exceeded.

– The discharge lines are to be properly designed.

CAUTION!

Danger of injury to personnel and material damage

The use of untested third party components can result in injury to personnel and material damage.

– Only fit parts to metering pumps that have been tested and recommended by ProMinent.

8.1 Installing hose lines

8.1.1 Installation of Metering Pumps Without Bleed Valve

Safety Information

CAUTION!

Warning of feed chemical spraying around

The pipes can loosen or rupture if they are not installed correctly.

- Route all hose lines so they are free from mechanical stresses and kinks.
- Only use original hoses with the specified hose dimensions and wall thicknesses.
- Only use clamp rings and hose nozzles that are intended for the hose diameter in question to ensure the long service life of the connections.

CAUTION!

Danger from rupturing hydraulic components

Hydraulic components can rupture if the maximum permissible operating pressure is exceeded.

- Always adhere to the maximum permissible operating pressure of all hydraulic components - please refer to the product-specific operating instructions and system documentation.
- Never allow the metering pump to run against a closed shut-off device.
- Install a relief valve.

CAUTION!

Hazardous feed chemicals can escape

Hazardous or extremely aggressive feed chemicals can leak out when using conventional bleeding procedures with metering pumps.

- Install a bleed line with return line into the storage tank.

CAUTION!

Hazardous feed chemicals can escape

Hazardous or extremely aggressive feed chemicals can leak out in the event that the metering pump is removed from the installation.

- Install a shut-off valve on the metering pump's pressure and discharge sides.

CAUTION!

Uncontrolled flow of feed chemical

Feed chemicals can leak through a stopped metering pump if there is back pressure.

- Use an injection valve or a vacuum breaker.

CAUTION!

Uncontrolled flow of feed chemical

Feed chemicals can leak through the metering pump in an uncontrolled manner in the event of excessive priming pressure.

– Do not exceed the maximum permissible priming pressure for the metering pump.

Align the pipes so that the metering pump and the liquid end can be removed from the side if necessary.

Installing hose lines - PP, NP, PV, TT designs

1. Cut off the ends of the hoses at right angles.
2. Pull the union nut (2) and clamp ring (3) over the hose (1) - see figure Fig. 10.
3. Push the hose end (1) up to the stop over the nozzle (4) and widen, if necessary.

Ensure that the O-ring and flat seal (5) is properly fitted to the valve (6).

Never re-use used PTFE seals. An installation sealed in this way is not watertight.

This type of seal is permanently distorted when subjected to pressure.

In order to enable it to be distinguished from the EPDM flat seal, the FPM flat seal PV design has a dot.

4. Place the hose (1) with the nozzle (4) onto the valve (6).
5. Clamp the hose connector: Tighten the union nut (2) while simultaneously pressing on the hose (1).
6. Re-tighten the hose connector: Pull on the hose (1) briefly, which is fastened to the dosing head and then tighten the union nut (2) once more.

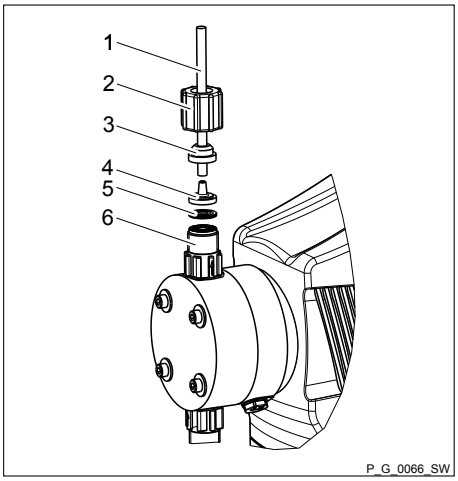

Fig. 10: PP, NP, PV and TT designs

1 Hose
2 Union nut
3 Clamp ring
4 Nozzle
5 O-ring or flat seal
6 Valve

Installing stainless steel pipe - SS design

1. Pull the union nut (2) and clamp rings (3, 4) over the pipe (1) with approx. 10 mm overhang - see Fig. 11.
2. Insert the pipe (1) up to the stop in the valve (5).
3. Tighten the union nut (2).

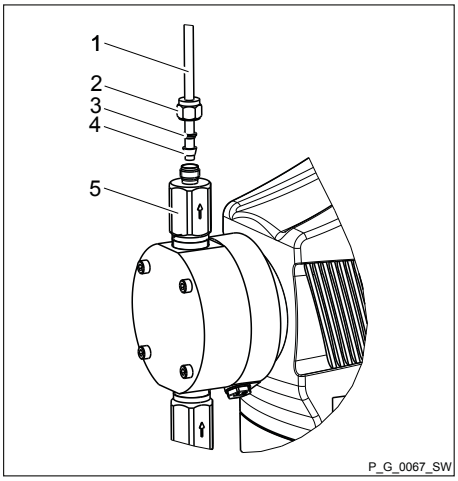

Fig. 11: SS design

1 Pipe
2 Union nut
3 Rear clamp ring
4 Front clamp ring
5 Valve

Installing hose lines - SS design

CAUTION!

Warning of feed chemical spraying around

Connections can come loose in the event that hose lines are installed incorrectly on stainless steel valves.

- Only use PE or PTFE hose lines.
- In addition, insert a stainless steel support insert into the hose line.

8.1.2 Installation of Metering Pumps With Bleed Valve

Safety Information

CAUTION!

– All the installation and safety notes for metering pumps without bleed valves also apply.

Installation of the return line

A return line is also connected in addition to the suction and discharge line.

1. Attach the hose line to the return hose nozzle or to the liquid end bleed valve. PVC hose, soft, 6x4 mm is recommended.
2. Feed the free end of the return line back to the storage tank.
3. Shorten the return line so that it is not immersed in the feed chemical in the storage tank.

8.1.3 Installation of Metering Pumps With Self-bleeding (SEK Type)

Safety Information

CAUTION!

– All of the installation and safety notes for metering pumps without self-bleeding also apply.
– Do not exceed the maximum values for priming lift, priming pressure and viscosity of the feed chemical.
– Do not allow the suction side line cross-section to exceed the line cross-section on the suction valve.

Information about priming pressure

– *Make sure that the priming pressure on the suction end is at least equal to the return line pressure.*
– *Back pressure in the return line restricts the bleeding function.*
– *In contrast, it is possible to operate the pump with back pressure in the return line and atmospheric pressure on the suction side.*

Installation of the return line

A return line is also connected in addition to the suction and discharge line.

– *The return line is connected to the vertical valve on the upper side of the liquid end. It is factory-labelled with a red sleeve - see ‘Installation of the return line’ on page 30.*
– *The discharge line is connected to the horizontal valve.*

1. Attach the hose line to the return hose nozzle or to the liquid end bleed valve. PVC hose, soft, 6x4 mm is recommended.
2. Feed the free end of the return line back to the storage tank.
3. SEK only: Insert the return line into the anti-kink device on the bleed valve and screw it in place until the anti-kink device engages.

The anti-kink device prevents the return line from kinking, avoiding the risk of self-bleeding failure.

4. Shorten the return line so that it is not immersed in the feed chemical in the storage tank.

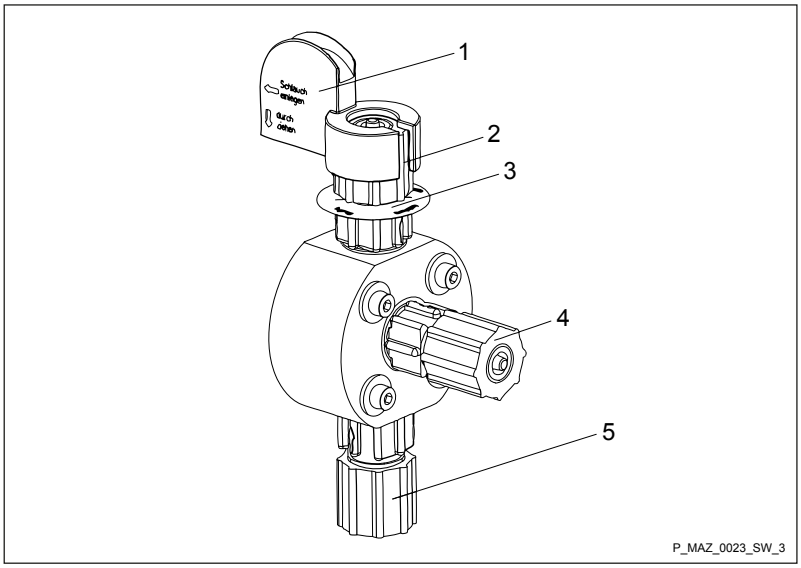

Fig. 12: SEK liquid end

1 Anti-kink device
2 Bleed valve for the return line into the storage tank, 6/4 mm
3 Red sleeve
4 Discharge valve for discharge line to the injection point, 6/4 - 12/9 mm
5 Suction valve for suction line in the storage tank, 6/4 - 12/9 mm

8.2 Basic installation notes

Safety notes

CAUTION!
Danger resulting from rupturing hydraulic components
Hydraulic components can rupture if the maximum permissible operating pressure is exceeded.

– Never allow the metering pump to run against a closed shut-off device.
– With metering pumps without integral relief valve: Install a relief valve in the discharge line.

CAUTION!
Hazardous feed chemicals can escape
With hazardous feed chemicals: Hazardous feed chemical can leak out when using conventional bleeding procedures with metering pumps.

– Install a bleed line with a return into the storage tank.

Shorten the return line so that it does not dip into the feed chemical in the storage tank.

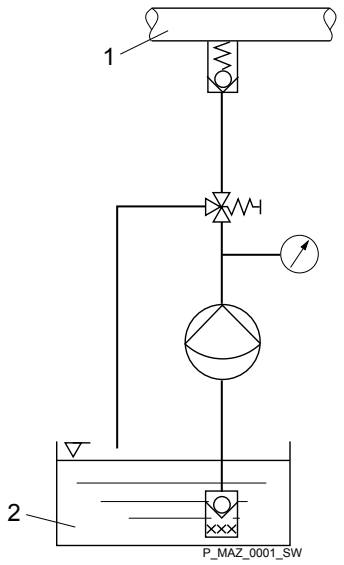

Fig. 13: Standard installation

1 Main line
2 Storage tank

Legend for hydraulic diagram

Symbol	Explanation	Symbol	Explanation
	Metering pump		Foot valve with filter meshes
	Injection valve		Level switch
	Multifunctional valve		Manometer

9 Installation, Electrical

WARNING!
Danger of electric shock
A mains voltage may exist inside the device.

– Before any work, disconnect the device's mains cable from the mains.

WARNING!
Risk of electric shock
This pump is supplied with a grounding conductor and a grounding-type attachment plug.

– To reduce the risk of electric shock, ensure that it is connected only to a proper grounding-type receptacle.

WARNING!
Risk of electric shock
In the event of an electrical accident, the pump must be quickly disconnected from the mains.

– Install an emergency cut-off switch in the pump power supply line or
– Integrate the pump in the emergency cut-off management of the system and inform personnel of the isolating option.

WARNING!
Danger of electric shock
Incompletely installed electrical options can allow moisture into the inside of the housing.

– Fit appropriate modules into the slot on the front of the pump or use the original blank cover to seal it in a leak-tight manner.

WARNING!
Danger of electric shock
A mains voltage may exist inside the pump housing.

– If the pump housing has been damaged, you must disconnect it from the mains immediately. It may only be returned to service after an authorised repair.

CAUTION!
Material damage possible due to power surges
Should the pump be connected to the mains power supply in parallel to inductive consumers (such as solenoid valves, motors), inductive power surges can damage the controller when it is switched off.

– Provide the pump with its own contacts and supply with voltage via a contactor relay or relay.

Install the pump in line with best working practice and in accordance with the operating instructions and applicable regulations.

9.1 Supply voltage connector - mains voltage

WARNING!

Unexpected startup is possible

As soon as the pump is connected to the mains, the pump may start pumping and consequently feed chemical may escape.

– Prevent dangerous feed chemicals from escaping.
– If you have not successfully prevented this, immediately press the *[STOP/START]* key or disconnect the pump from mains, e.g. via an emergency cu-off switch.

CAUTION!

If the pump is integrated into a system: Design the system so that potential hazardous situations are avoided by pumps starting up automatically subsequent to unintended power interruptions.

Connect the pump to the mains/power supply using the mains cable.

9.2 Description of the Terminals

9.2.1 "External control" Terminal

The "external control" terminal is a 5-pole panel terminal. It is compatible with 2- and 4-pole cables.

Only use a 5-pole cable with the "Auxiliary capacity" / "Auxiliary frequency" and "mA-input" functions.

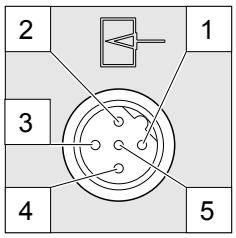

Fig. 14: Pump assignment

Electrical interface for pin 1 "Pause" - pin 2 "External contact" - pin 5 "Auxiliary capacity / Auxiliary frequency"

Data	Value	Unit
Voltage with open contacts	5	V
Input resistance	10	kΩ
Max. pulse frequency	25	pulse/s
Min. pulse duration	20	ms

Control via:

- potential-free contact (load: 0.5 mA at 5 V) or
- Semiconductor switch (residual voltage < 0.7 V)

Electrical interface for pin 3 "mA input" (with identity code characteristic "Control version": 2 and 3)[1]

Data	Value	Unit
Input apparent ohmic resistance, approx.	120	Ω

[1] The metering pump makes its first metering stroke at approx. 0.4 mA (4.4 mA) and reaches maximum frequency at approx. 19.6 mA.

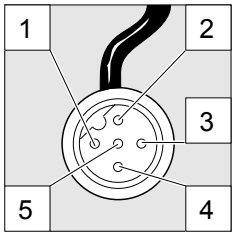

Fig. 15: Cable assignment

Pin	Function	5-wire cable	2-wire cable
1	Pause	brown	bridged at pin 4
2	External contact	white	brown
3	mA input*	blue	-
4	Earth / GND	black	white
5	Auxiliary capacity / Auxiliary frequency	grey	-

* with identity code characteristic "Control version": 3

Refer to the functional description for the hierarchy of functions and operating modes.

"Pause" function

The pump does not work if:

- the cable is connected and pin 1 and pin 4 are open.

The pump works if:

- the cable is connected and pin 1 and pin 4 are connected.
- no cable is connected.

"External contact" operating mode

The pump performs one or more strokes if:

- Pin 2 and pin 4 are connected to each other for at least 20 ms. At the same time, pin 1 and pin 4 must also be connected to each other.

"Analogue" operating mode

The pump capacity and/or stroke rate can be controlled by a current signal. The current signal is connected between pin 3 and pin 4.

In addition, pin 1 and pin 4 must also be connected.

"Auxiliary capacity" / "Auxiliary frequency" operating mode

The pump works at a pre-set capacity / stroke rate if:

- Pin 5 and pin 4 are connected to each other. At the same time, pin 1 and pin 4 must also be connected to each other. The auxiliary capacity / auxiliary frequency is factory-preset to maximum capacity / stroke rate.

9.2.2 "Level switch" terminal

There is a connecting option for a 2-stage level switch with pre-warning and limit stop.

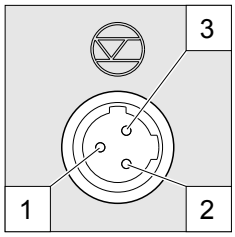

Fig. 16: Pump assignment

Electrical interface

Data	Value	Unit
Voltage with open contacts	5	V
Input resistance	10	kΩ

Control via:

- potential-free contact (load: 0.5 mA at 5 V) or
- Semiconductor switch (residual voltage < 0.7 V)

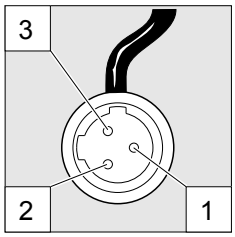

Fig. 17: Cable assignment

Pin	Function	3-wire cable
1	Earth / GND	black
2	Minimum pre-warning	blue
3	Minimum limit stop	brown

9.2.3 "Dosing monitor" terminal

There is a connection option for a dosing monitor.

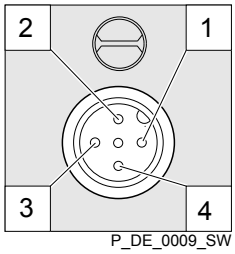

Fig. 18: Pump assignment

Electrical interface

Data	Value	Unit
Voltage with open contacts	5	V
Input resistance	10	kΩ

Control via:

- potential-free contact (load: 0.5 mA at 5 V) or

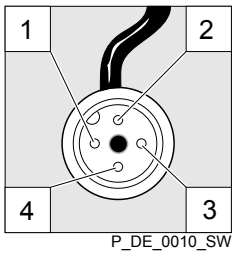

Fig. 19: Cable assignment

Pin	Function	4-wire cable
1	Power supply (5 V)	brown
2	Coding	white
3	Feedback	blue
4	Earth / GND	black

9.2.4 "Diaphragm rupture indicator" terminal

There is an option to connect a diaphragm rupture indicator.

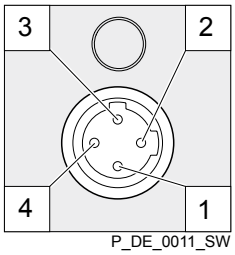

Fig. 20: Pump assignment

Electrical interface

Specification	Value
Supply voltage, approx.:	+5 V, loadable with 20 mA (current limit 150 mA)
Power consumption:	min. 10 mA, max. 20 mA (sensor presence detection)
Sensor signal:	potential-free contact (load: 0.5 mA at +5 V) or Semiconductor switch (residual voltage < 0.3 V)

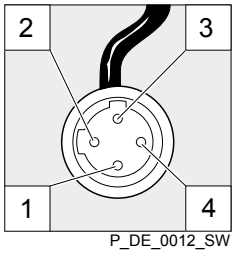

Fig. 21: Cable assignment

Pin	Function	4-wire cable
1	Power supply (5 V)	brown
2	not assigned	white
3	Sensor signal	blue
4	Earth / GND	black

9.2.5 Relay

9.2.5.1 Relay functions

gamma/ X GMXa

Identity code	Description	Type	Maximum voltage	Maximum current	Behaviour of relay type when retrofitting, as standard
0	no relay	-	-	-	-
1	Fault indicating relay	NC changeover contact	230 V	8 A	X
4	fault indicating relay + Pacing relay	N/O N/O	24 V 24 V	100 mA 100 mA	X X
C	fault indicating relay + 4-20 mA output	N/O	24 V	100 mA	X

Relay type switches in the event of...

Relay type*	Level Warning	Level low	Dosing monitor Error	Calibrated stroke length Error	Processor Error
Fault indicating relay:	X	X	X	X	X
Warning relay:	X	-	-	X	-

* Can be reprogrammed in the *'Relay'* menu.

9.2.5.2 "Fault indicating relay" output (identity code 1)

A fault indicating relay can be ordered as an option - refer to ordering information in the appendix. It is used to emit a signal when there is a fault with the pump and for the "Liquid level low, 1st stage" warning message and "Liquid level low, 2nd stage" fault message.

The fault indicating relay can be retrofitted and is operational once attached to the relay board - refer to "Retrofitting Relays" supplementary operating instructions.

The behaviour is factory-programmed. If another switching function is required, the pump can be reprogrammed in the *'Relay'* menu.

The relay can be retrofitted and operates once it is plugged into the relay board.

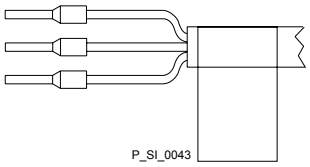

Fig. 22: Cable assignment

Electrical interface

Data	Value	Unit
Maximum contact load at 230 V and 50/60 Hz:	8	A
Minimum mechanical lifespan:	200,000	switching operations

Identity code 1

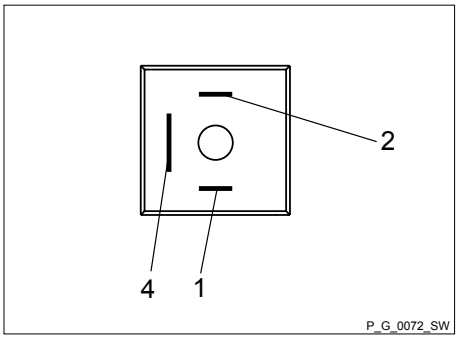

Fig. 23: Pump assignment

To pin	VDE cable	Contact	CSA cable
1	white	NO (normally open)	white
2	green	NC (normally closed)	red
4	brown	C (common)	black

9.2.5.3 Output for Other Relays (Identity code 4)

A fault indicating and a pacing relay can optionally be ordered - refer to ordering information in the appendix. The pacing output is electrically-isolated by means of an optocoupler with a semiconductor switch. The second switch is a relay (also electrically isolated).

The behaviour is factory-programmed. If another switching function is required, the pump can be reprogrammed in the *'Relay'* menu.

The fault indicating/pacing relay can be retrofitted and is operational once attached to the relay board - refer to "Retrofitting Relays" supplementary operating instructions.

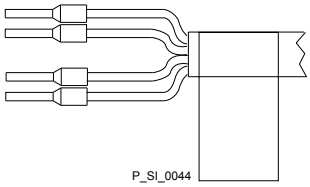

Fig. 24: Cable assignment

Electrical interface

for fault indicating relay output:

Data	Value	Unit
Maximum contact load at 24 V and 50/60 Hz:	2	A
Minimum mechanical lifespan:	20,000,000	switching operations

for semiconductor switch pacing relay:

Data	Value	Unit
Max. residual voltage at $I_{off\ max}$ = 1 µA	0.4	V
Maximum current	100	mA
Maximum voltage	24	VDC
Pacing pulse duration, approx.	100	ms

Identity code 4

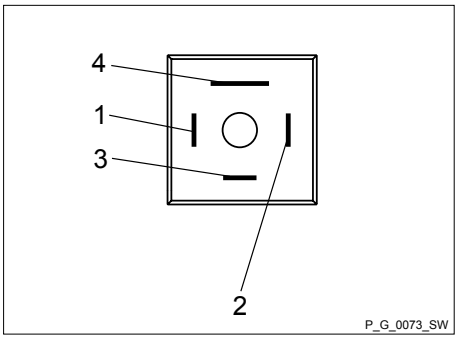

Fig. 25: Pump assignment

To pin	VDE cable	Contact	Relay
1	yellow	NO (normally open)	other relay
4	green	C (common)	other relay
3	white	NO (normally open)	Pacing relay
2	brown	C (common)	Pacing relay

9.2.5.4 Output "Current output plus relay" (identity code C)

A relay combined with a current output can optionally be ordered. The relay either switches off the pump as a fault indicating relay in the event of a fault on the pump and with "Liquid level low 1st stage" warning message and "Liquid level low 2nd stage" fault messages or is used as a pacing relay.

The behaviour is factory-programmed. If another switching function is required, the pump can be reprogrammed in the *'Relay'* menu.

In the *'ANALOG OUTPUT'* menu, the variable to be signalled by the current output can be selected.

The current output plus relay can be retrofitted and operates once it is plugged into the board.

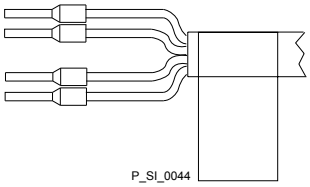

Fig. 26: Cable assignment

Electrical interface

for current output

Data	Value	Unit
Open circuit voltage:	8	V
Current range:	4 ... 20	mA
Ripple, max.:	80	µA pp
Ripple, max.:	250	Ω

for semiconductor switch ("relay"):

Data	Value	Unit
Max. residual voltage at $I_{off\ max}$ = 1 µA	0.4	V
Maximum current	100	mA
Maximum voltage	24	VDC
Pacing pulse duration, approx.	100	ms

Identity code c

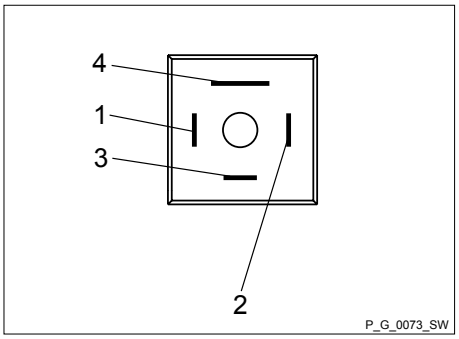

Fig. 27: Pump assignment

To pin	VDE cable	Contact	Relay
1	yellow	"+"	Current output
4	green	"-"	Current output
3	white	NC (normally closed) or NO (normally open)	Relay
2	brown	C (common)	Relay

10 Basic Set-up Principles

- *Please also refer to all the overviews covering "Operating/set-up overview" and "Operating menu for gamma/ X, complete" in the appendix and the chapters "Overview of Equipment and Control Elements" and "Control Elements".*
- *The pump leaves the menu and returns to a continuous display if [Menu] is pressed or no key is pressed for 60 seconds.*

10.1 Basic Principles for Setting up the Control

Fig. 28: Please read

Fig. 29 shows using the "Language" example how to set up something - in turn:

- Following the displays
- The path derived from this
- The path as presented in the operating instructions

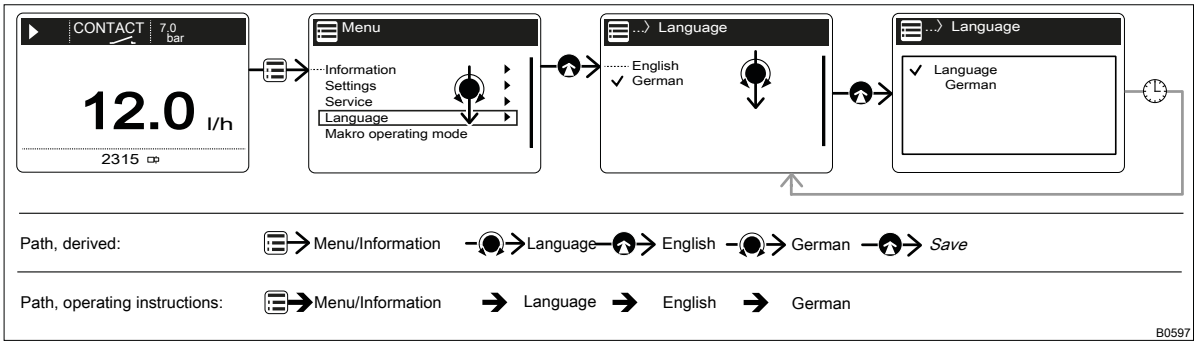

Fig. 29: "Setting up the language": As an example of set-up and path displays

Legend:

Symbol	Explanation
	Press *[Menu]*
	Turn the *[Clickwheel]*
	Press the *[Clickwheel]*

"Setting up the language" in detail

1. To access the *'Menu'*: press *[Menu]*.
   ⇨ The cursor points to *'Information'*.
2. To switch from *'Information'* to *'Language'*: turn the *[Clickwheel]*.
3. To return to the *'Language'* menu: press the *[Clickwheel]*.
   ⇨ The cursor points to a language.
4. To switch to *'Deutsch'*: turn the *[Clickwheel]*.
5. To save: press the *[Clickwheel]*.
   ⇨ The software shows a display by way of confirmation.
   After 2 seconds, it returns to the higher-level *'Menu'*.

6. To complete the setting: press [Menu].

   Alternatively: wait 15 seconds or exit the *'Menu'* via [Menu] or via *'End'*.

Confirming an entry

Briefly press the *[Clickwheel]*.

⇨ The software switches to the next menu point or back to the menu and saves the entry.

Quitting a menu option without confirming it

Press [Back].

⇨ The software switches to the next menu point or back to the menu without saving anything.

Returning to a continuous display

Press [Menu].

⇨ The software cancels the entry and switches to a continuous display without saving anything.

Changing adjustable variables

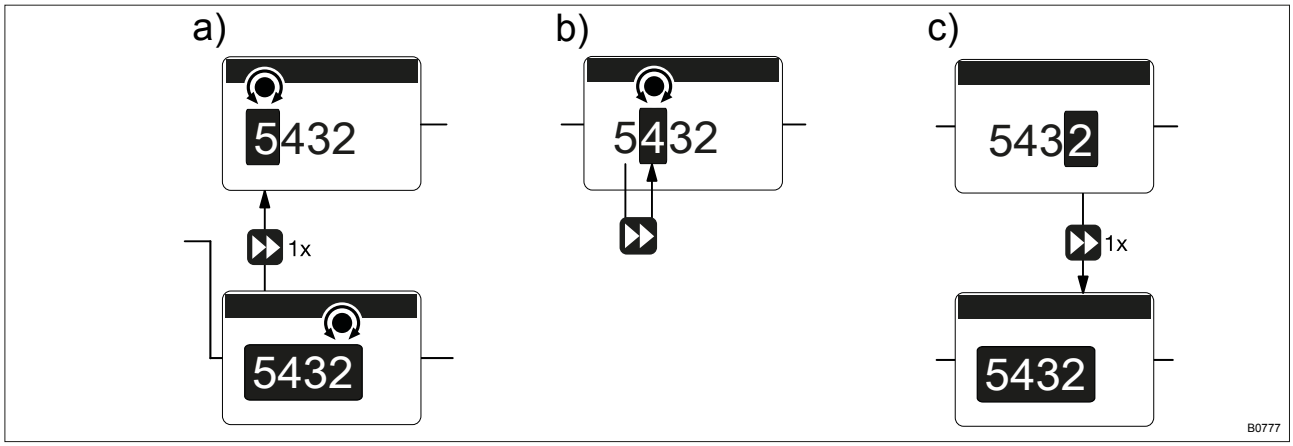

Fig. 30: a) Changing from one figure to its initial figures; b) Changing the figure; c) Returning from the last figure to the (complete) figure (to correct a wrong figure, for example0.

Changing a (complete) number

Turn the *[Clickwheel]*.

⇨ The value of the figure highlighted is increased or lowered.

Changing figures

1. To adjust the value of a figure, press [Priming].

   ⇨ The first figure is highlighted - see Figure above, point a)

2. To adjust the value of a figure, turn the *[Clickwheel]*.

3. To move to the next figure, press *[Priming]* - see Fig. above, point b).

4. To run through the figures again, if necessary (possibly because of an incorrect figure), when you get to the last figure press ⏭ *[Priming]* again - see Fig. above, point c).

   ⇨ Now you can start from the beginning again.

Confirming adjustable variables

Press the *[Clickwheel]* 1x.

⇨ The software saves the entry.

10.2 Checking adjustable variables

Continuous displays

Before you adjust the pump, you can check the actual settings of the adjustable variables:

Simply turn the *[Clickwheel]* if the pump is showing a continuous display.

⇨ Each time the *[Clickwheel]* engages when you turn it, you will see a different continuous display.

The number of continuous displays depends on the identity code, the selected operating mode and the connected additional devices, see overview "Continuous displays" in the appendix.

Secondary displays

The lowest line of a continuous display shows different information (which cannot be adjusted in the secondary display) - see overview "Continuous displays and secondary displays" in the appendix.

You can access secondary displays via any continuous display as follows:

1. Press the *[Clickwheel]* for 3 seconds.

   ⇨ A frame appears around the secondary display.

2. Providing there is a frame, you will see a different secondary display each time the *[Clickwheel]* engages when turned.

   When you reach the secondary display you wish, leave the *[Clickwheel]* and wait briefly.

10.3 Changing to set up mode

In a continuous display, if you press ☰ *'Menu'*, the pump changes to set-up mode - in the *'Menu'*. For more information refer to the following chapter entitled "Set-up / menu".

If under *'Access protect.'* only the *'Menu'* or *'All'* has been set (top left lock symbol), then after pressing the *[Clickwheel]*, first enter the *'Password'*.

11 Set Up / *'Menu'*

- *Please also refer to all overviews covering "Operating/ set up overview" and "Operating menu for gamma/ X, complete" in the appendix and in the chapters "Overview of Equipment and Control Elements".*
- *The pump leaves the menu and returns to a continuous display if [Menu] is pressed or no key is pressed for 60 seconds.*

The *'Menu'* is sub-divided as follows:

1 - *'Information'*

2 - *'Settings'*

3 - *'Timer'*

4 - *'Service'*

5 - *'Language'*

11.1 *'Information'*

→ *'Menu / Information → ...'*

The *'Information'* provides information on your pump and certain parameters and counters. The number and type can depend on the pump settings.

11.2 *'Settings'*

→ *'Menu / Information → Settings → ...'*

The *'Settings'* menu generally includes these setting menus:

1 - *'Operating mode'*

2 - *'Automatic'*

3 - *'Stroke length'*

4 - *'Metering'*

5 - *'Concentration'*

6 - *'Calibration'*

7 - *'System'*

8 - *'Inputs/outputs'*

9 - *'Bleed valve'*

10 - *'Priming time'*

11 - *'Time'*

12 - *'Date'*

11.2.1 *'Operating Mode'*

→ *'Menu / Information → Settings → Operating mode → ...'*

11.2.1.1 *'Manual'*

➔ *'Menu / Information ➔ Settings ➔ Operating mode ➔ Manual'*

'Manual' operating mode permits you to operate the pump manually.

The capacity and/or stroke rate and stroke length can be set in the continuous displays in this operating mode.

11.2.1.2 *'Contact'*

➔ *'Menu / Information ➔ Settings ➔ Operating mode ➔ Contact ➔ ...'*

'Contact' operating mode allows you to trigger individual strokes or a stroke series.

You can trigger the strokes via a pulse sent via the "External control" terminal.

The purpose of this operating mode is to convert the incoming pulses into strokes with a step-down (fractions) or small step-up.

CAUTION!
The pump maintains the stroke rate when changing over from *'Manual'* operating mode to *'Contact'* operating mode.

The maximum stroke rate can be set in 'Contact' operating mode. It should normally be set to 12,000 strokes/hour.

Memory - Pulses not yet processed

You can also activate the *'Memory'* function extension ("memory" identifier). When *'Memory'* is activated, the pump adds up the remaining strokes, which could not be processed, up to the maximum capacity of the stroke memory of 4,200,000,000 strokes. If this maximum capacity is exceeded, the pump goes into fault mode.

CAUTION!
– Only with *'Memory'* - *'off'* : If you press *[STOP/START]* or empty the contact memory (*'Menu / Information ➔ Service ➔ Clear counters'*) or the "Pause" function is activated, the *'Memory'* is cleared.

Factor

The number of strokes per pulse depends on the factor which you can input. By using a factor you can multiply incoming pulses by a factor between 1.01 and 99.99 or reduce them by a factor of 0.01 to 0.99:

```
Number of strokes executed = factor x number of
incoming pulses
```

Table of examples

	Factor	Pulse (sequence)	Number of strokes (sequence)
Step-up*			
	1	1	1
	2	1	2
	25	1	25
	99.99	1	99.99
	1.50	1	1.50 (1 / 2)
	1.25	1	1.25 (1 / 1 / 1 / 2)
Step-down**			
	1	1	1
	0.50	2	1
	0.10	10	1
	0.01	100	1
	0.25	4	1
	0.40	2.5 (3 / 2)	(1 / 1)
	0.75	1.33 (2 / 1 / 1)	(1 / 1 / 1)

*** Explanation of the conversion ratio**

With a factor of 1	... 1 stroke is executed per 1 pulse.
With a factor of 2	... 2 strokes are executed per 1 pulse
With a factor of 25	... 25 strokes are executed per 1 pulse

**** Explanation of step-down**

With a factor of 1	... 1 stroke is executed per 1 pulse.
With a factor of 0.5	...1 stroke is executed after 2 pulses.
With a factor of 0.1	...1 stroke is executed after 10 pulses.
With a factor of 0.75	...1 stroke is executed once after 2 pulses, then 1 stroke is executed twice after 1 pulse, and then again 1 stroke after 2 pulses etc.

If a remainder is obtained when dividing by the factor, then the unit adds the remainders together. As soon as this sum reaches or exceeds "1", the pump executes an additional stroke. Therefore on average during the metering operation, the resultant number of strokes precisely matches the factor.

Contact water meter

Using "Pulse Control" you can ideally adapt the pump to the relevant process, for example in conjunction with contact water meters.

11.2.1.3 *'Batch'*

'Menu / Information ➔ Settings ➔ Operating mode ➔ Batch ➔ ...'

The *'Batch'* operating mode enables you to pre-select large metering volumes.

You can only select whole numbers but no fractions as the number of strokes (figures 1 to 99,999).

You can trigger the strokes using the *[Clickwheel]* if you have already switched to the *'Push'* continuous display. You can also trigger them via a pulse via the "External control" terminal.

The stroke rate can be set in 'Batch' operating mode. It should normally be set to 12,000 strokes/hour.

Memory - remaining strokes not yet processed

You can also activate the *'Memory'* function extension ("memory" identifier). When *'Memory'* is activated, the pump adds up the remaining strokes, which could not be processed, up to the maximum capacity of the stroke memory of 4,200,000,000 strokes. If this maximum capacity is exceeded, the pump goes into fault mode.

CAUTION!

– The pump maintains its stroke rate when changing over from *'Manual'* operating mode to *'Batch'* operating mode.
– If you press *[STOP/START]* or the "Pause" function is activated, the *'Memory'* is cleared.

In operation, the batch size can be changed more easily by using the "Batch size" continuous display.

11.2.1.4 *'Analogue'* (Option)

'Menu / Information ➔ Settings ➔ Operating mode ➔ Analogue ➔ ...'

The secondary display "Signal current" indicates the incoming current.

You can select 5 types of current signal processing:

- *'0 - 20 mA'*
- *'4 - 20 mA'*
- *'Linear curve '*
- *'Lower side band'*
- *'Upper side band'*

'0 - 20 mA'

At 0 mA the pump is stationary –

At 20 mA the pump works at maximum stroke rate.

'4 - 20 mA'

At 4 mA the pump is stationary –

At 20 mA the pump works at maximum stroke rate.

With current signals of less than 3.8 mA, an error message appears and the pump stops (e.g. if a cable has broken).

'Linear curve'

The symbol "Linear curve" appears on the LCD screen. You can enter any pump stroke rate behaviour proportional to the current signal. For this purpose, enter any two points P1 (I1, F1) and P2 (I2, F2) (F1 is the stroke rate at which the pump is to operate at current I1, F2 is the stroke rate at which the pump is to operate at current I2...); this defines a straight line and thus the behaviour is specified:

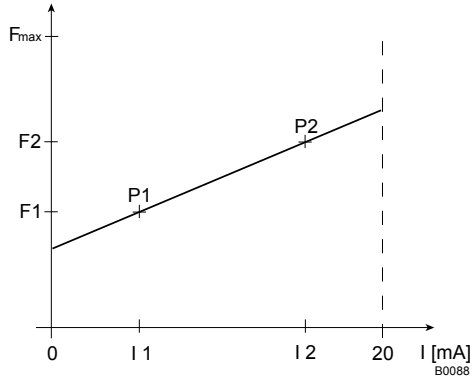

Fig. 31: Frequency-current diagram for "Linear curve"

Plot a diagram similar to the one above – with values for (I1, F1) and (I2, F2) – so that you can set the pump as desired!

The smallest processable difference between I1 and I2 is 4 mA (|I1-I2| ≥4 mA).

Error processing

In the *'Error message'* menu item, you can activate an error process for these types of processing.

'Lower side band'

Using this type of processing, you can control a metering pump using the current signal as shown in the diagram below.

However, you can also control two metering pumps for different feed chemicals via a current signal (e.g. one acid pump and one alkali pump using the signal of a pH sensor). To do this, connect the pumps electrically in series.

Error processing

In the *'Error message'* menu item, you can activate an error process for these types of processing.

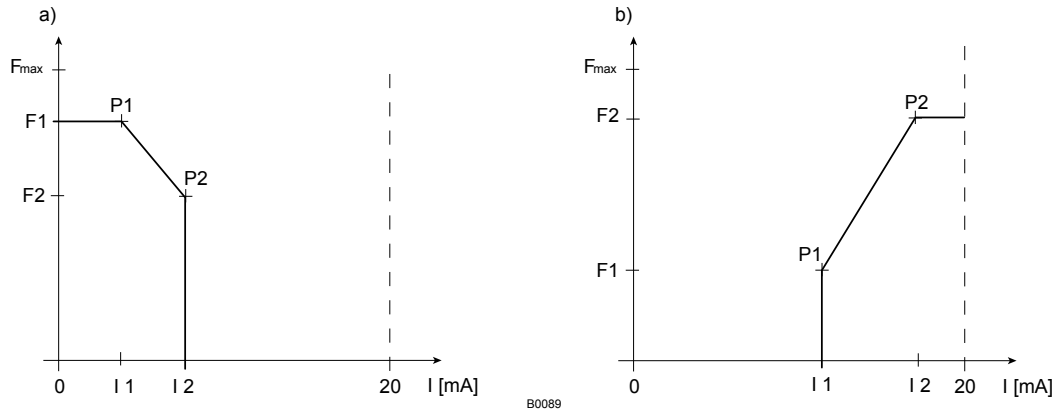

Fig. 32: Frequency-current diagram for a) Lower side band, b) Upper side band

'Upper side band'

Using this processing type, you can control a metering pump using the current signal as shown in the diagram above.

Everything functions according to the type of the processing *'Lower side band'*.

11.2.2 *'Automatic'*

☰➔ *'Menu / Information ➔ Settings ➔ Automatic ➔ ...'*

In the *'Automatic'* menu, you can set whether the unit is to meter automatically or conventionally.

With *'Automatic' - 'on'*, you set direct values, such as capacity, metering volume or dosing time, instead of stroke length and stroke rate. Other selection points then appear in the operating menu - refer to the chapter "Operating Menu for gamma/ X, complete" (in the appendix) for the selection points highlighted with a "*1".

In *'Automatic' - 'on'* metering mode, the gamma/ X specifies the stroke length and the stroke rate according to the conditions determined in order to meter the set capacity.

'Automatic' - 'on' and 'Automatic' - 'off' metering modes are completely independent of each other. That is to say that 'Automatic' - 'off' metering mode does not carry over settings from 'Automatic' - 'on'.

11.2.3 *'Stroke length'*

☰➔ *'Menu / Information ➔ Settings ➔ Stroke length ➔ ...'*

The menu does not appear with *'Automatic' 'on'*!

In the *'Stroke length'* menu, you can enter the stroke length manually.

In operation, the stroke length can be changed more easily by using the "Stroke length" continuous display:

- *Turn the [Clickwheel] to return to the "Stroke length" continuous display.*
- *Press the [Clickwheel] and then turn it to set the stroke length.*
- *Press the [Clickwheel] to save the stroke length.*

11.2.4 Metering

☰ ➔ *'Menu / Information ➔ Settings ➔ Metering ➔ ...'*

11.2.4.1 *'Discharge Stroke'*

☰ ➔ *'Menu / Information ➔ Settings ➔ Metering ➔ Discharge stroke ➔ ...'*

In the *'Settings'* - *'Discharge stroke'* sub-menu, you can precisely match the pump metering flow over time against the requirements of the particular application.

This ensures that the user can set the optimum **discharge stroke** for his application, as required:

Pos.*	Discharge stroke	Application
A.	*'optimum'*	For maximum accuracy when metering and the very best results with internal pressure measurement and special functions.
B.	*'fast'*	For as fast a discharge stroke as possible - the duration of the discharge stroke is dependent on the stroke rate.
C.	*'Sine mode'*	For a long, sine-shaped discharge stroke - the duration of the discharge stroke is dependent on the stroke rate.
D.	*'continuous'*	For a continuous discharge stroke e.g. for bottling processes. The duration of the discharge stroke is dependent on the stroke rate.
E.	*'DFMa'*	For optimum operation with a flow meter DulcoFlow® DFMa.

* see following drawing.

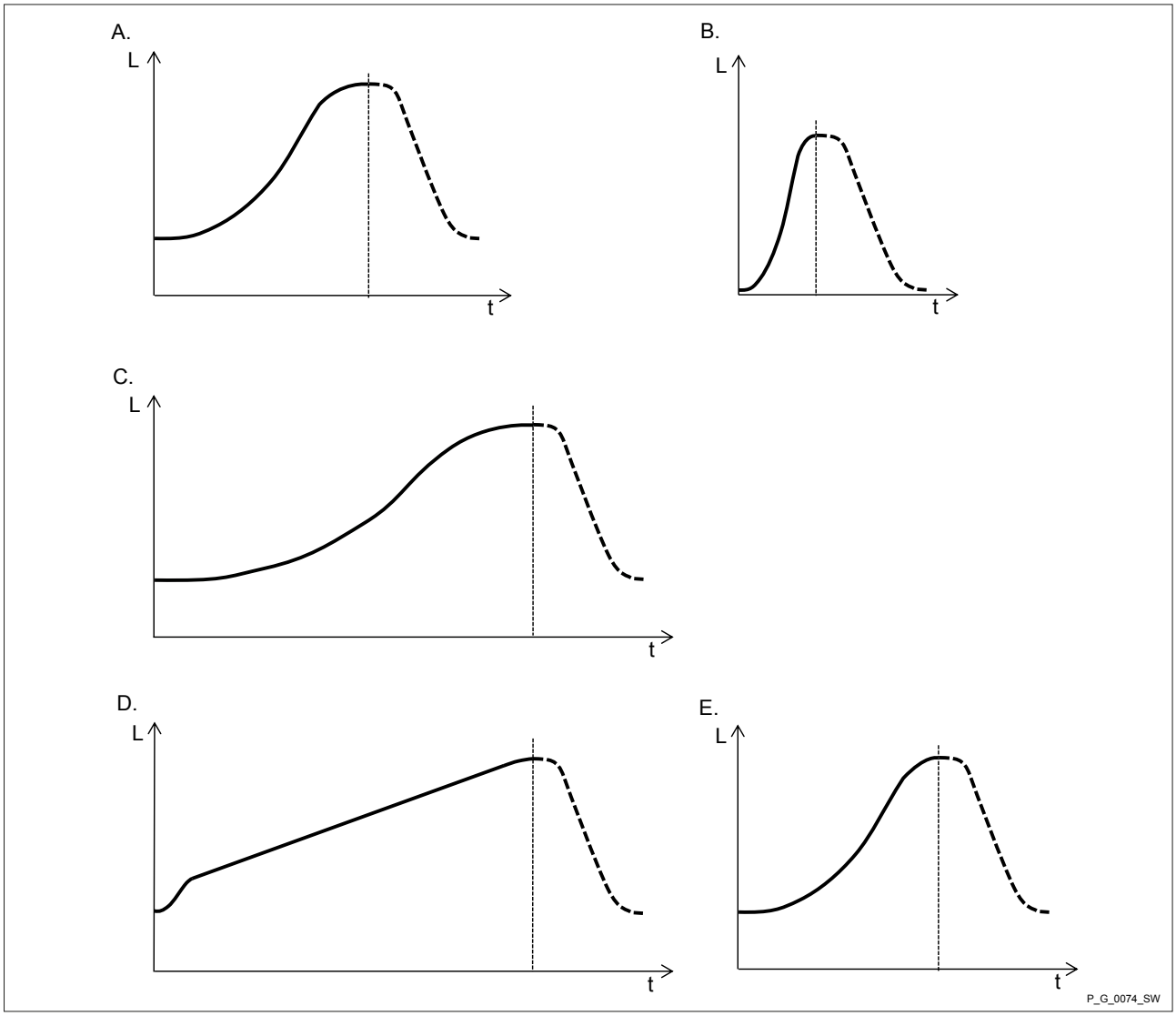

Fig. 33: Discharge stroke metering profiles with stroke L and time t (suction stroke shown as a dotted line)

11.2.4.2 *'Suction Stroke'*

☰ ➔ *'Menu / Information ➔ Settings ➔ Metering ➔ Suction stroke ➔ ...'*

It is possible to selectively also slow the **suction stroke** with all these metering profiles for the discharge stroke - see . In this way, it is possible to prevent the main cause of inaccurate metering with high viscosity feed chemicals, namely the incomplete filling of the liquid end. With gaseous feed chemicals, the slow suction stroke prevents cavitation and consequently increases dosing precision.

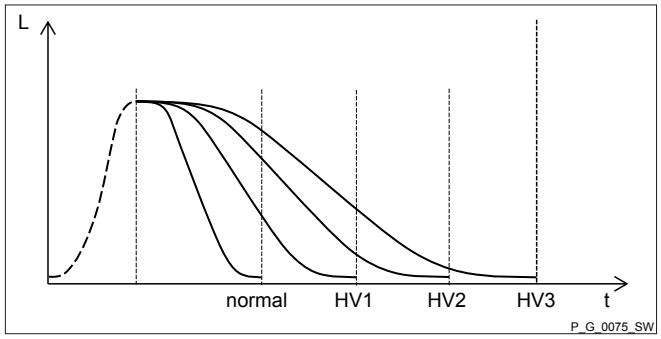

Fig. 34: Suction stroke metering profiles with stroke L and time t

Normal Normal suction stroke
HV1 Suction stroke for viscous feed chemical
HV2 Suction stroke for average viscosity feed chemical
HV3 Suction stroke for high-viscosity feed chemical

– *Slowing down the suction stroke leads to a lower stroke rate and thus to a lower capacity.*

'Suction stroke' setting	Maximum stroke rate Strokes/min
Normal	200
HV1	160
HV2	120
HV3	80

11.2.4.3 *'Pressure Stage'*

➔ *'Menu / Information ➔ Settings ➔ Metering ➔ Pressure stage ➔ ...'*

You can use the programmable function *'Pressure stage'* to reduce the nominal pressure of the pump, thereby minimising the risk of lines rupturing.

The switch-off pressure of the permanently active overpressure monitoring falls at the same time as the pressure stage - see .

Nominal pressures depending on the size of the liquid ends and the pressure stages

Pressure stage /	4	7	10	16	20	25
Size of liquid end						
1602	X	X	X	X	-	-
2002	X	X	X	-	X	-
1604	X	X	X	X	-	-
2504	X	X	X	-	-	X

Pressure stage /	4	7	10	16	20	25
Size of liquid end						
1009	X	X	X	-	-	-
0708	X	X	-	-	-	-
0715	X	X	-	-	-	-
0414	X	-	-	-	-	-
0424	X	-	-	-	-	-

Pressure stage	Switch-off pressure*
2	2.8
4	5.2
7	8.5
10	12.5
16	19
20	23
25	28

* above which the unit is switched off for the medium-term in the event of excess pressure

11.2.4.4 *'Monitoring'*

→ *'Menu / Information* → *Settings* → *Metering* → *Monitoring* → *...'*

11.2.4.4.1 *'Air lock'*

→ *'Menu / Information* → *Settings* → *Metering* → *Monitoring* → *Air lock* → *...'*

Should a message and the "Air lock" symbol appear, this may mean that there is gas in the liquid end (if *'Warning'* or *'Error'* was set in the *'Air lock'* sub-menu).

11.2.4.5 Compensation

Using the *'Compensation'* programmable function, you can minimise the influence of back pressure oscillations and thus achieve a high dosing precision.

With difficult hydraulic conditions, it can be better to switch off the 'Compensation' function.

11.2.5 Concentration

→ *'Menu / Information → Settings → Concentration → ...'*

The desired mass concentration of feed chemical that will subsequently be required in the dissolving medium (e.g. the main flow) can be entered directly in the "Concentration" continuous display.

The principle of entering the concentration:

1. Select the operating mode.
2. Set the data for the feed chemical and dissolving medium in the *'Set up'*- *'Concentration'* menu.
3. Set the desired concentration in the "Concentration" continuous display.

- *The "Concentration" continuous display only appears, if:*
  - *the pump is calibrated.*
  - *the 'Concentration' menu was run through in the operating mode used.*
  - *and 'Concentration control' was switched to 'active' - in the operating mode being used.*
- *The "Concentration" continuous display switches to the display mode "%" at concentrations above 999.99 ppm.*
- *When changing between operating modes, the pump saves the settings for each operating mode - providing it is connected to supply voltage.*
- *If the pump is to display the concentration as a volume concentration, enter "1.00" kg/l for the density of the feed chemical.*

11.2.5.1 *'Manual'* operating mode (settings for the *'Concentration'* function)

→ *'Menu / Information → Settings → Concentration → Concentration control → Flow of main medium → ...'*

The "Concentration input" in *'Manual'* operating mode is intended for metering a substance into pipework containing a medium flowing at a constant rate (*'main flow'*) in such a way that it has a specific mass concentration in the flow.

CAUTION!

Danger of too high concentrations

The metering pump can continue to meter if the flow falls or stops entirely.

- Take system-based precautions to prevent the metering pump from continuing to meter in these circumstances.

The prerequisites are that:

- the flowing medium has the same density as water (1 kg/l ≙ g/cm³)
- the mass concentration of the feed chemical is known - see the feed chemical safety data sheet (e.g. with 35% sulphuric acid: 35 %)

- the density of the feed chemical is known - see the feed chemical safety data sheet (e.g. with 35% sulphuric acid: 1.26 kg/l ≙ g/cm³)
- The measurement unit for the liquid volume is set in the *'System* ➔ *Volume unit'* menu.

Procedure

CAUTION!
The precision of the concentration is strongly dependent on:
– the precision of the metering pump calibration.
– the precision of the inputs.

1. Calibrate the metering pump if it is not yet calibrated - see chapter *'Settings'*- *'Calibration'* chapter.
2. Check whether the metering pump is set to *'Automatic'* - *'on'* metering mode.
3. Select *'Manual'* - *'Operating mode'* (possible settings from other operating modes remain saved.).
4. Select *'Concentration'* in the *'Set up'* menu.
5. Actively set *'active'* in the *'Concentration control'* menu item and press the *[Clickwheel]*.
6. Set the *'Main medium flow'* (in the pipework) and then press the *[Clickwheel]*.
7. Set the *'Feed chemical mass concentration'* and press the *[Clickwheel]*.
8. Set the (mass) *'Feed chemical density'* and press the *[Clickwheel]*.
   ⇨ The *'Concentration'* menu appears.
9. Press *[Menu]*.
   ⇨ A continuous display appears.
10. Press the *[Clickwheel]* to go to the "Concentration" continuous display (ppm or %).
11. Enter the required mass concentration of the feed chemical in the main flow by pressing and turning the *[Clickwheel]*.

Possible values of adjustable variables

Adjustable variable	Lower value	Upper value	Increment
Flow in m³/h	0000.1	9999.9	0000.1
Mass concentration in %	000.01	100.00	000.01
Mass density in kg/l	0.50	2.00	0.01

11.2.5.2 *'Contact'* operating mode (settings on the *'Concentration'* function)

'Menu / Information ➔ Settings ➔ Concentration ➔ Concentration control ➔ Contact gap ➔ ...'

The "Concentration input" in *'CONTACT'* operating mode is intended for metering a substance into pipework containing a medium flowing at a variable rate in such a way that it has a specific mass concentration in the flow.

CAUTION!
Danger of too high concentrations
The metering pump can continue to meter if the flow falls or stops entirely.

– Take system-based precautions to prevent the metering pump from continuing to meter in these circumstances.

The prerequisites are that:

- the flowing medium has the same density as water (1 kg/l ≙ g/cm³)
- the mass concentration of the feed chemical is known - see the feed chemical safety data sheet (e.g. with 35% sulphuric acid: 35 %)
- the density of the feed chemical is known - see the feed chemical safety data sheet (e.g. with 35% sulphuric acid: 1.26 kg/l ≙ g/cm³)
- a contact water meter is hydraulically installed and connected to the external input of the metering pump.
- The measurement unit for the liquid volume is set in the *'System* ➔ *Volume unit'* menu.

Procedure

CAUTION!
The precision of the concentration is strongly dependent on:

– the precision of the metering pump calibration.
– the precision of the inputs.

1. Calibrate the metering pump if it is not yet calibrated - see chapter *'Settings'*- *'Calibration'* chapter.
2. Check whether the metering pump is set to *'Automatic'* - *'on'* metering mode.
3. Select *'Contact'* - *'Operating mode'* and simply confirm the associated menu items with the *[Clickwheel]* (possible settings from other operating modes remain saved.)
4. Select *'Concentration'* in the *'Set up'* menu.
5. Actively set *'active'* in the *'Concentration control'* menu item and press the *[Clickwheel]*.
6. Set the *'Contact gap'* and press the *[Clickwheel]*.
7. Set the (mass) *'Feed chemical concentration'* and press the *[Clickwheel]*.
8. Set the (mass) *'Feed chemical density'* and press the *[Clickwheel]*.

   ⇨ The *'Concentration'* menu appears.
9. Press *[Menu]*.

   ⇨ A continuous display appears.
10. Press the *[Clickwheel]* to go to the "Concentration" continuous display (ppm or %).

11. You can enter the desired mass concentration using the *[Clickwheel]*.

Possible values of adjustable variables

Adjustable variable	Lower value	Upper value	Increment
Contact gap in l/contact	000.10	999.99	000.01
Mass concentration in %	000.01	100.00	000.01
Mass density in kg/l	0.50	2.00	0.01

11.2.5.3 *'Batch'* operating mode (settings for the *'Concentration'* function)

➔ *'Menu / Information* ➔ *Settings* ➔ *Concentration* ➔ *Concentration control* ➔ *Volume of main medium* ➔ *...'*

The "Concentration input" in *'Batch'* operating mode, is intended for metering a substance into the medium in a storage tank so that it then has a defined mass concentration in the storage tank (when batching a solution – do not forget to stir!).

The prerequisites are that:

- the medium in the storage tank has the same mass density as water (1 kg/l ≙ g/cm³)
- the mass concentration of the feed chemical is known - see the feed chemical safety data sheet (e.g. with 35% sulphuric acid: 35 %)
- the density of the feed chemical is known - see the feed chemical safety data sheet (e.g. with 35% sulphuric acid: 1.26 kg/l ≙ g/cm³)
- The measurement unit for the liquid volume is set in the *'System* ➔ *Volume unit'* menu.

Procedure

CAUTION!
The precision of the concentration is strongly dependent on:
– the precision of the metering pump calibration.
– the precision of the inputs.

1. Calibrate the metering pump if it is not yet calibrated - see *'Set up'* - *'Calibration'* chapter.
2. Check whether the metering pump is set to *'Automatic'* - *'on'* metering mode.
3. Select *'Batch'* - *'Operating mode'* and simply confirm the associated menu items with the *[Clickwheel]* (possible settings from other operating modes remain saved.)
4. Select *'Concentration'* in the *'Set up'* menu.
5. Actively set *'active'* in the *'Concentration control'* menu item and press the *[Clickwheel]*.
6. Set the *'Main medium volume'* of the medium in the storage tank and press the *[Clickwheel]*.
7. Set the (mass) *'Feed chemical concentration'* and press the *[Clickwheel]*.
8. Set the (mass) *'Feed chemical density'* and press the *[Clickwheel]*.
   ⇨ The *'Concentration'* menu appears.

9. Press *[Menu]*.

   ⇨ A continuous display appears.

10. Press the *[Clickwheel]* to go to the "Concentration" continuous display (ppm or %).

11. You can enter the desired mass concentration using the *[Clickwheel]*.

Possible values of adjustable variables

Adjustable variable	Lower value	Upper value	Increment
Volume in l	0000.1	9999.9	0000.1
Mass concentration in %	000.01	100.00	000.01
Mass density in kg/l	0.50	2.00	0.01

11.2.5.4 *'Analogue'* operating mode (settings on the *'Concentration'* function)

'Menu / Information ➔ *Settings* ➔ *Concentration* ➔ *Concentration control* ➔ *Max. flow of main medium* ➔ *...'*

The "Concentration input" in *'Analogue'* operating mode is intended for metering a substance into pipework containing a medium flowing at a variable rate in such a way that it has a specific mass concentration in the flow.

CAUTION!
Danger of too high concentrations
The metering pump can continue to meter if the flow falls or stops.
– Take system-based precautions to prevent the metering pump from continuing to meter in these circumstances.

CAUTION!
Risk of incorrect concentrations
– After adjusting, check whether the concentration at various flows corresponds to the required result.

The prerequisites are that:

- the flowing medium has the same density as water (1 kg/l ≙ g/cm³)
- the mass concentration of the feed chemical is known - see the feed chemical safety data sheet (e.g. with 35% sulphuric acid: 35 %)
- the density of the feed chemical is known - see the feed chemical safety data sheet (e.g. with 35% sulphuric acid: 1.26 kg/l ≙ g/cm³)
- a flow meter with analogue output is hydraulically installed and connected to the external input of the metering pump.
- The measurement unit for the liquid volume is set in the *'System* ➔ *Volume unit'* menu.

Procedure

CAUTION!
The precision of the concentration is strongly dependent on:
– the precision of the metering pump calibration.
– the precision of the inputs.

1. Calibrate the metering pump if it is not yet calibrated - see chapter *'Settings'*- *'Calibration'* chapter.
2. Check whether the metering pump is set to *'Automatic'* - *'on'* metering mode.
3. Select *'Analogue'* operating mode and confirm with the *[Clickwheel]*.
4. Set *'0...20 mA'* or *'4..20 mA'* in the *'Select analogue'* menu item and press the *[Clickwheel]*.
5. Select *'Concentration'* in the *'Set up'* menu.
6. Actively set *'active'* in the *'Concentration control'* menu item and press the *[Clickwheel]*.
7. Set the *'Max. main medium flow'* (in the pipework) and press the *[Clickwheel]*. (It is then assigned to the current value of 20 mA).
8. Set the (mass) *'Feed chemical concentration'* and press the *[Clickwheel]*.
9. Set the (mass) *'Feed chemical density'* and press the *[Clickwheel]*.
   ⇨ The *'Concentration'* menu appears.
10. Press *[Menu]*.
    ⇨ A continuous display appears.
11. Press the *[Clickwheel]* to go to the "Concentration" continuous display (ppm or %).

12. You can enter the desired mass concentration using the *[Clickwheel]*.

CAUTION!
- Note the decimal point.
- The mass concentration is affected by changes in the stroke rate and the stroke length.
- The pump limits the upper value of the mass concentration, because otherwise the incremental jumps when adjusting would be unacceptably large. Adjust the stroke length as necessary - do not set it under 30%.

The least significant figures of the value in the continuous display cannot be changed at will using the [Arrow keys], rather only in incremental jumps resulting from the input data.

As necessary, change the stroke length and adjust the concentration; in doing so the pump compensates via the stroke rate.

Possible values of adjustable variables

Adjustable variable	Lower value	Upper value	Increment
Max. flow in m^3/h	0000.1	9999.9	0000.1
Mass concentration in %	000.01	100.00	000.01
Mass density in kg/l	0.50	2.00	0.01

11.2.6 Calibrate

➔ *'Menu / Information ➔ Settings ➔ Calibration ➔ ...'*

Accuracy of calibration 1

Normally the pump does not have to be calibrated.

The pump can be calibrated if viscous feed chemicals are used or extremely high accuracy is required.

Accuracy of calibration 2

Calibration will not be accurate if these conditions are not adhered to:

- *do not allow the stroke length to fall below 30%.*
- *The pump should perform a minimum of 200 strokes for calibration.*

WARNING!
If the feed chemical is dangerous, take appropriate safety precautions when performing the following calibration instructions. Observe the safety data sheet for the feed chemical!

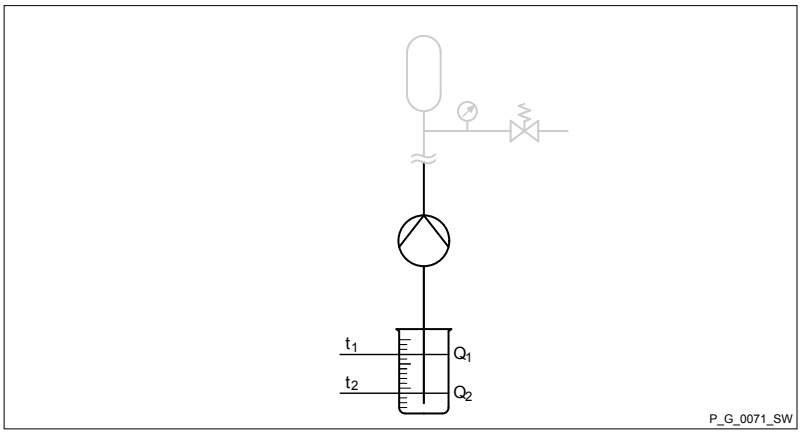

Preparation

1. Use the *[Clickwheel]* to scroll through the continuous display to check whether litres or gallons have been selected.
2. If the incorrect volume unit has been selected, correct it in the *'Menu / Information* ➔ *Settings* ➔ *System* ➔ *Volume unit'* menu.
3. Check whether the capacity of stroke rate in the continuous display is not too low for calibration.
4. Lead the suction hose into a measuring cylinder containing the feed chemical – make sure that the discharge hose is installed in a permanent manner (operating pressure, ...!).
5. Prime the feed chemical (press ⏩ *[Priming]*) if the suction hose is empty.

Calibration process

1. Record the level in the measuring cylinder.
2. Select the *'Menu / Information* ➔ *Settings* ➔ *Calibrate'* ' menu and press the *[Clickwheel]*.
   ⇨ The *'Start calibration'* (PUSH) menu point appears.
3. To start calibration, press the *[Clickwheel]*.
   ⇨ The *'Calibrate ...'* menu item appears, the pump starts to pump and indicates the number of strokes.
4. After a reasonable number of strokes (a minimum of 200), use the *[Clickwheel]* to stop the pump.
   ⇨ The *'Calibration ended'* menu point appears. It demands the calibration volume to be entered.
5. Determine the required metering volume (difference between initial volume - remaining volume in the measuring cylinder).
6. Use the *[Clickwheel]* to enter this volume in the *'Calibration ended'* menu items and close.
   ⇨ The pumps switches to the *'Calibration result'* menu item - the pump is calibrated.
7. Press the *[Clickwheel]*.
   ⇨ The pump returns to the *'Menu / Information* ➔ *Settings'* menu.

11.2.7 System

'Menu / Information ➔ Settings ➔ System ➔ ...'

The *'System'* menu splits into the following sub-menus:

1 - *'Dosing head'*

2 - *'Volume unit'*

3 - *'Pressure unit'*

11.2.7.1 *'Dosing head '*

'Menu / Information ➔ Settings ➔ System ➔ Dosing head ➔ ...'

CAUTION!

– Should a different liquid end size be fitted, then the pump must be reprogrammed in the *'Dosing head'* sub-menu.

– Reprogram the pump to *'No dosing head'* for demonstration purposes or if operating without feed chemical.

If 'SEK' has been selected as the type of head, the pressure is not displayed and the 'Automatic' menu is hidden. Only 'fast' can be selected for the 'Discharge stroke' and 'normal' for the 'Suction stroke'.

11.2.7.2 Volume unit

'Menu / Information ➔ Settings ➔ System ➔ Volume unit ➔ ...'

You can select another unit for the volume in the *'Volume unit'* sub-menu.

11.2.7.3 Pressure unit

'Menu / Information ➔ Settings ➔ System ➔ Pressure unit ➔ ...'

In the *'Pressure unit'* sub-menu, you can select another unit for the pressure.

11.2.8 Inputs/Outputs

'Menu / Information ➔ Settings ➔ Inputs/Outputs ➔ ...'

The *'Inputs/Output'* menu splits into the following sub-menus:

1 - *'Auxiliary Capacity' / 'Auxiliary Frequency'*

2 - *'Relay1'* (optional)

3 - *'Relay2'* (optional)

4 - *'mA output'* (optional)

5 - *'Diaphragm rupture'* (only if connected)

6 - *'Flow control'* (only if connected)

7 - *'Pause input'* (Option)

8 - *'Level warning'*

9 - *'Level error'*

11.2.8.1 *'Auxiliary Capacity' / 'Auxiliary Frequency'*

☰ ➔ *'Menu / Information ➔ Settings ➔ Inputs/Outputs ➔ Auxiliary capacity / Auxiliary frequency ➔ ...'*

The programmable function *'Auxiliary capacity' / 'Auxiliary frequency'* permits the switch-over to an additional capacity / stroke rate that can be fixed in the *'Auxiliary capacity' / 'Auxiliary frequency'* menu.

It can be activated via the "External control" terminal. If *'Auxiliary capacity' / 'Auxiliary frequency'* is being used, then the identifier "AUX" appears on the LCD screen.

Refer to the "Hierarchy of Operating Modes, Functions and Fault Statuses" for the order of the various operating modes, functions and fault statuses.

11.2.8.2 *'Relay1 (Optional)'*

☰ ➔ *'Menu / Information ➔ Settings ➔ Inputs/outputs ➔ Relay1 ➔ ...'*

The setting options for the 'Relay' function only exist if a relay is fitted.

gamma/ X, GMXa

Relay, physical and pre-set to ...

Identity code specification	Relay, physical	Pre-set to ...
1	1 x changeover contact 230 V – 8 A	Fault indicating relay, N/C
4	2 x N/O 24 V – 100 mA	Fault indicating relay, N/C, and pacing relay
C	1 x N/O 24 V – 100 mA, + 4...20 mA output	Fault indicating relay, N/C

Relay type

You can reprogram the relays to these types:

Menu setting	Effect
Inactive	The relay is inactive.
Error	The relay switches in the event of a fault message (red LED*).
Warning	The relay switches in the event of a warning message (yellow LED*).
Warning + error	The relay switches in the event of a warning message (yellow LED*) or a fault message (red LED*).
Pump active	The relay switches as soon as the pump is in standby and not in a state like *'Pause'* .
Metering / Batch	The relay changes its state as soon as a batch has been processed.
Stroke rate**	The relay switches at every stroke.
Option	The relay has the option of the module plugged in (e.g. the bleed module).
Bleed	The relay switches upon the internal signal *'Air lock'*.

* see the "Troubleshooting" chapter

** only use *'Relay 2'* for this relay type (semiconductor relay).

Relay polarity

You can set here how a relay is to switch.

Menu setting	Effect
normally-closed (NC)	The relay is closed in normal mode and opens with a triggering event.
normally-open (NO)	The relay is open in normal mode and opens with a triggering event.

11.2.8.3 *'Relay2 (Optional)'*

☰ ➔ *'Menu / Information ➔ Settings ➔ Inputs/outputs ➔ Relay2 ➔ ...'*

Relay cycle quantity

Here you can set the metering volume for which the pacing relay is to switch once.

For more information on *'Relay2'* - see ↳ *Chapter 11.2.8 'Inputs/Outputs' on page 62*.

11.2.8.4 *'mA Output (Optional)'*

☰ ➔ *'Menu / Information ➔ Settings ➔ Inputs/outputs ➔ mA output ➔ ...'*

Here you can set which current range is to be used at the mA output.

You can then set whether the current stroke rate (strokes / hour) is to be signalled at the mA output or the capacity (litres / hour) and the corresponding value for 20 mA.

11.2.8.5 *'Diaphragm Rupture'*

☰➔ *'Menu / Information ➔ Settings ➔ Inputs/outputs ➔ Diaphragm rupture ➔ ...'*

The setting options for the 'Diaphragm rupture' function only exist if a diaphragm rupture indicator is electrically installed. The symbol for diaphragm appears }.

In the *'Diaphragm rupture'* sub-menu you can select whether the pump generates a warning message or a fault message in the event of a diaphragm rupture.

11.2.8.6 *'Flow Control'*

☰➔ *'Menu / Information ➔ Settings ➔ Inputs/outputs ➔ Flow control ➔ ...'*

The setting options for the 'Flow control' function only exists if a flow control has been electrically installed. The symbol for flow control appears: ⊜.

A metering monitor, such as a Flow Control (also DulcoFlow®), can register the individual pressure impacts of the pump and feed it back to the pump.

The pump switches to fault mode if this feedback is missing in a sequence, as set under *'Error tolerance'*.

It is possible to switch the function on and off under *'Activation'* .

It is possible to set whether the function is to be deactivated with auxiliary frequency under *'if Auxiliary'*.

11.2.8.7 *'Pause Input'*

☰➔ *'Settings ➔ Inputs/outputs ➔ Pause ➔ ...'*

In the *'Pause'* menu you can select whether the pump switches to *'Pause'* with a "normally-open (NO)" or "normally-closed (NC) input contact signal.

11.2.8.8 *'Level Warning'*

☰➔ *'Settings ➔ Inputs/outputs ➔ Level warning ➔ ...'*

In the *'Level warning'* menu, you can select whether the pump switches to *'Level warning'* with a "normally-open (NO)" or "normally-closed (NC)" input contact signal.

11.2.8.9 *'Level Error'*

☰➔ *'Settings ➔ Inputs/outputs ➔ Level error ➔ ...'*

In the *'Level error'* menu, you can select whether the pump switches to *'Level error'* with a "normally-open (NO)" or "normally-closed (NC)" input contact signal.

11.2.9 Bleed

➔ *'Menu / Information* ➔ *Settings* ➔ *Bleed* ➔ *...'*

The *'Bleed'* function is used for controlled bleeding of the liquid end.

The software solution is always in the pump control. The pump presses the gas bubbles out of the liquid end at maximum stroke rate during bleeding.

If the pump has "Automatic bleed" via the "relay identity code option (retro-fittable), the pump can be bled via a bleed relay.

There are 2 hardware options for automatically bleeding the discharge side:

- via ProMinent's bleed module in the liquid end.
- via a customer implemented bleed facility in the discharge line.

The *'Bleed'* function can be triggered in 4 ways:

1 - Not (*'Off'*).

2 - *'Periodically'* by an internal signal - defined by *'Cycle'* and *'Duration'*.

3 - By the *'Air lock'* internal signal

4 - If one of the two signals occurs (*'Both'*).

Detailed explanation:

1 - If *'Off'* has been selected in the menu, this function is deactivated.

2 - If *'Periodically'* was selected in the menu, then the control unit periodically triggers the bleed procedure with an adjustable *'cycle'* (10 ... 1440 min = 24 h) and an adjustable *'duration'* (5 ... 300 s = 5 min).

Bleeding is always triggered at the start of a period. A bleed process is also started by the *[STOP/START]* key or by connecting the pump to mains voltage.

3 - If *'Air lock'* has been selected in the menu, the *'Air lock'* internal signal triggers the bleed procedure.

If the signal appears again within 8 minutes of the bleed procedure being carried out, the control unit repeats the bleed procedure up to a maximum of 3 times. However if the signal still appears, then an error message is generated, which has to be acknowledged via the *[dial]*.

In the event of an *'Air lock'* the option of a direct error or warning message disappears for the *'Air lock'* signal. The corresponding menu branch in the *'Settings'* menu is also hidden. The signal is only available for the *'Bleed'* function.

4 - If *'Both'* has been selected in the menu, then each trigger can trigger a bleed process.

Sequence of the bleed procedure (automatic):

1. The pump control stops the normal metering operation - the "Stop Pause" symbol appears on the LCD screen.
2. Only with bleed relay: After 1 s, the pump control opens the bleed valve on the liquid end (via the bleed relay and the solenoid valve).
3. 1 s later, the pump starts to run at its maximum possible stroke rate (as during priming) - the "Air lock" symbol appears on the LCD screen instead of the "Stop Pause" symbol.
4. The pump operates in this way for the total set time.

5. Once the set time has elapsed, the pump stops – the "Stop Pause" symbol appears on the LCD screen again.
6. Only with bleed relay: After 1 s the pump control closes the liquid end bleed valve.
7. After 1 s the "Stop Pause" symbol disappears and the pump recommences normal operation.

If the pump was in the "Stop" state at the time of triggering (*[STOP/START]*, Pause, Error), the start of the bleed procedure is delayed - until this state has been cleared.

If the pump switched to "Stop" state during the bleed procedure, the pump control jumps immediately to phases 5 and 6 - see above. This definitely cancels the bleed procedure. As soon as the "Stop" state is cleared, the bleed procedure starts from the beginning.

11.2.10 *'Priming Time'*

→ *'Menu / Information → Settings → Priming time → ...'*

In the *'Priming time'* menu, you can select how long the metering pump is to prime once *[Priming]* has been pressed.

In operation, the stroke length can be changed more easily using the "Priming time" display:

- *Press [Priming] - the pump starts to prime.*
- *Turn the [Clickwheel] to set the priming time.*
- *Press the [Clickwheel] to save the priming time.*

11.2.11 *'Time'*

→ *'Menu / Information → Settings → Time → ...'*

In the *'Time'* menu you can set the time.

1. Use the dial to adjust a figure.
2. Use *[Priming]* to move to the next figure.

Under *'Auto. Summer time'* you can select whether you wish to change over to *'Summer time'*.

You can also input when the pump is to change to and from *'Summer time'*.

11.2.12 *'Date'*

→ *'Menu / Information → Settings → Date → ...'*

You can set the date in the *'Date'* menu.

11.3 Timer

☰ ➔ *'Menu / Information ➔ Timer ➔ ...'*

11.3.1 Timer Activation

☰ ➔ *'Menu / Information ➔ Timer ➔ Activation ➔ ...'*

To activate the timer, set *'Activation'* to *'active'*.

11.3.2 Setting the Timer

☰ ➔ *'Menu / Information ➔ Timer ➔ Setting the timer ➔ ...'*

A program set up in "Automatic" - "on" metering mode will not function in "Automatic" - "off" metering mode and vice versa.

You can create commands (program lines) for a timer program in the *'Set timer'* menu.

You can create up to 32 commands (program lines).

You can then use the administration functions to manage the commands - ↳ *Chapter 11.3.2 'Setting the Timer' on page 68*.

Use the *'Clear all'* function to clear all commands (the program).

Create the command as follows:

1 - Create a command (program line)

2 - Select the triggering event and time

3 - Selecting the Action and Value

4 - Check the command

5 - Create the next command if necessary

11.3.2.1 Administration Functions for Commands

The following administration functions are available to manage the commands (program lines):

- *'New'*
- *'Display'* (only if commands entered)
- *'Change'* (only if commands entered)
- *'Clear'* (only if commands entered)

Use *'New'* to create a new command.

11.3.2.2 *'Init'* Initial Conditions

Use *'Init'* to specify initial conditions at the start of the program - see ↳ *Chapter 11.3.2.4 'Selecting the action and value' on page 69*.

11.3.2.3 Selecting the *'Time Event'* and Time

You can select a time event (cycle) and a time as well:

Time event	Time
'Hourly'	hourly at the x minute
'Daily (Mon-Sun)'	daily at the time mm.ss, Monday to Sunday
'Weekdays1 (Mo-Fr)'	daily at the time mm.ss, Monday to Friday
'Weekdays1 (Mo-Sa)'	daily at the time mm.ss, Monday to Saturday
'Weekend (Sa+Su)'	daily at the time mm.ss, Saturday and Sunday
'Weekly'	weekly at the time mm.ss on the day dd.
'Monthly'	weekly at the time mm.ss on the x. day of the month

CAUTION!
If you wish to use automatic summer time adjustment (*'Settings'* - *'Time'*) avoid any triggering events between 02:00 a.m. and 03:00 a.m.

11.3.2.4 Selecting the action and value

You can select an action and also a value:

Action	Value
Manual	Litre/h *1
	Strokes/h *2
	Stroke length * 2
Stop	--
Frequency	Litre/h *1
	Strokes/h *2
Relay 1	open
	closed
Relay 2	open
	closed

*1: only available in *'Automatic'* operating mode - see Chapter *'Settings'* - *'Automatic'*

*2: only available, if metering is done the traditional/conventional way.

11.3.2.5 Checking the Finished Command

The pump displays the finished command (program line) as soon as you have finished programming the command:

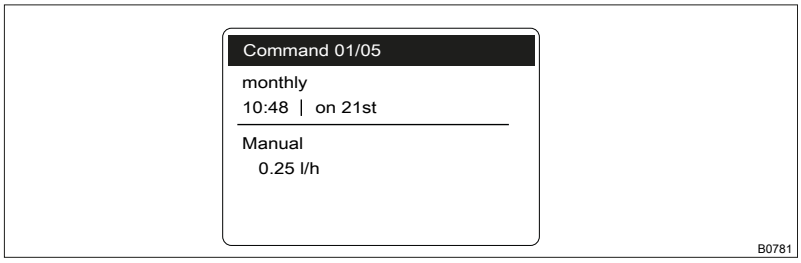

11.3.3 Clear All

➔ *'Menu / Information* ➔ *Timer* ➔ *Clear all* ➔ *...'*

Use the *'Clear all'* menu to clear all commands (the program).

11.3.4 Example

Example of "Weekday metering"

The pump is to meter 2 litres every half an hour every weekday (Mon-Fri) between 8:00 and 11:00:

Command	Time event	Time of day	Action	Capacity	Comment
01	workdays 1 (Mo-Fr)	08:30	Manual	12,000 l/h	//Meter with 12,000 l/h//
02	workdays 1 (Mo-Fr)	08:40	Stop		//Stop//
03	workdays 1 (Mo-Fr)	09:30	Manual	12,000 l/h	//Meter with 12,000 l/h//
04	workdays 1 (Mo-Fr)	09:40	Stop		//Stop//
05	workdays 1 (Mo-Fr)	10:30	Manual	12,000 l/h	//Meter with 12,000 l/h//
06	workdays 1 (Mo-Fr)	10:40	Stop		//Stop//

Explanation: At a capacity of 12 l/h, the pump has to work for 10 minutes to meter 2 litres.

11.4 *'Service'*

➔ *'Menu / Information* ➔ *Service* ➔ *...'*

11.4.1 *'Access Protect.'*

➔ *'Menu / Information* ➔ *Service* ➔ *Access protect.* ➔ *...'*

You can lock parts of the setting options here.

The following locking options are available:

Selection	Point ①	Point ②
'none'	-	-
' Lock menu'	X	-
'Lock all'	X	X

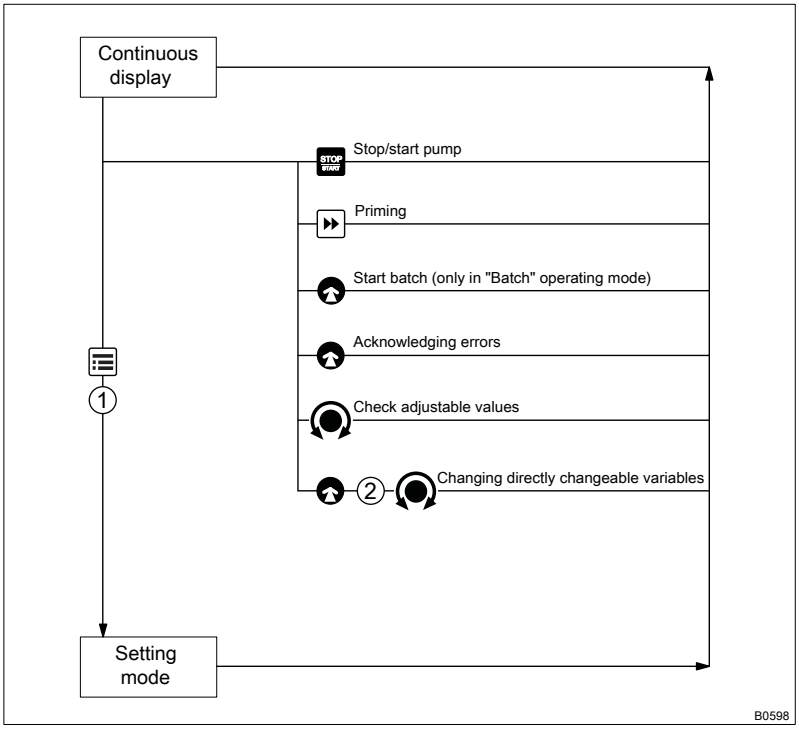

Fig. 35

If you have set a *'Password'* - see below, then the identifier will appear after 1 minute in the top left and the specified areas will be locked, if no key has been pressed in the meantime.

Both locks use the same *'Password'*.

11.4.2 *'Password '*

➔ *'Menu / Information ➔ Service ➔ Password ➔ ...'*

You can enter a password of your choice in the *'Change password'* menu.

11.4.3 *'Clear Counter'*

➔ *'Menu / Information ➔ Timer ➔ Clear counter ➔ ...'*

You can reset the counter to "0" in the *'Clear counter'* menu:

- *'Stroke counter'* (total number of strokes)
- *'Volume counter'* (total litres)
- *'Contact memory'*
- *'All'*

To clear: exit the menu by briefly pressing the *[Clickwheel]*.

The values have increased since commissioning of the pump, the last calibration or the last deletion.

11.4.4 *'Diaphragm Replacement'*

☰ ➔ *'Menu / Information* ➔ *Service* ➔ *Diaphragm replacement* ➔ *...'*

You can move the slide rod into the "replacement position" here with *'To replacement position'* to enable the diaphragm to be replaced more easily.

11.4.5 *'Display'*

☰ ➔ *'Menu / Information* ➔ *Service* ➔ *Display* ➔ *...'*

You can set the *'Contrast'* and the *'Brightness'* of the LCD screen here.

11.4.6 *'Reset to Factory Settings'*

☰ ➔ *'Menu / Information* ➔ *Service* ➔ *Reset to factory settings* ➔ *...'*

You can reset the pump to its factory settings here with *'Yes'*

11.5 *'Language'*

☰ ➔ *'Menu / Information* ➔ *Language* ➔ *...'*

In the *'Language'* menu, you can select the desired operating language.

12 Operation

WARNING!
Fire hazard with flammable media
Only with combustible media: These may start to burn when combined with oxygen.

– During filling and draining of the liquid end, an expert must ensure that feed chemical does not come into contact with oxygen.

This chapter describes all the operating options in a continuous display (several symbols and the pressure display appear at the top in the black bar) for the trained person at the pump.

– *Please also refer to the "Operating/Setting Overview" and "Continuous Displays and Secondary Displays" overviews at the end of the operating instructions and also the "Overview of Equipment and Control Elements" chapter.*

12.1 Manual operation

Stop/start pump

Stop the pump: Press *[STOP/START]*.

Start the pump: Press *[STOP/START]* again.

Priming

Press *[Priming]*.

Turn the *[Clickwheel]* to extend of shorten the priming time during priming.

Starting a batch

In *'Batch'* operating mode: Press the *[Clickwheel]* in the *'Push'* continuous display.

Acknowledging errors

Press the *[Clickwheel]* to acknowledge error messages that require acknowledgement.

Checking adjustable variables

In a continuous display: Another continuous display will appear each time the *[Clickwheel]* engages when turned. (The number depends on the configuration).

Changing directly changeable variables

Changing a variable in the relevant continuous display:

1. Press the *[Clickwheel]*.
   ⇨ The variable can be changed (highlighted).
2. Turn the *[Clickwheel]*.
   ⇨ The variable is changed.
3. Press the *[Clickwheel]*.
   ⇨ The variable is saved (the highlighting disappears).

If the "lock" - "lock all" has been set - see *'Set Up Overview of the gamma/ X' on page 74*, first enter the *'Password'* after pressing the *[Clickwheel]*.

List of directly changeable variables:

- Capacity
- Stroke rate
- Stroke length
- Factor
- Contact volume
- Batch dosing time
- Concentration

Set Up Overview of the gamma/ X

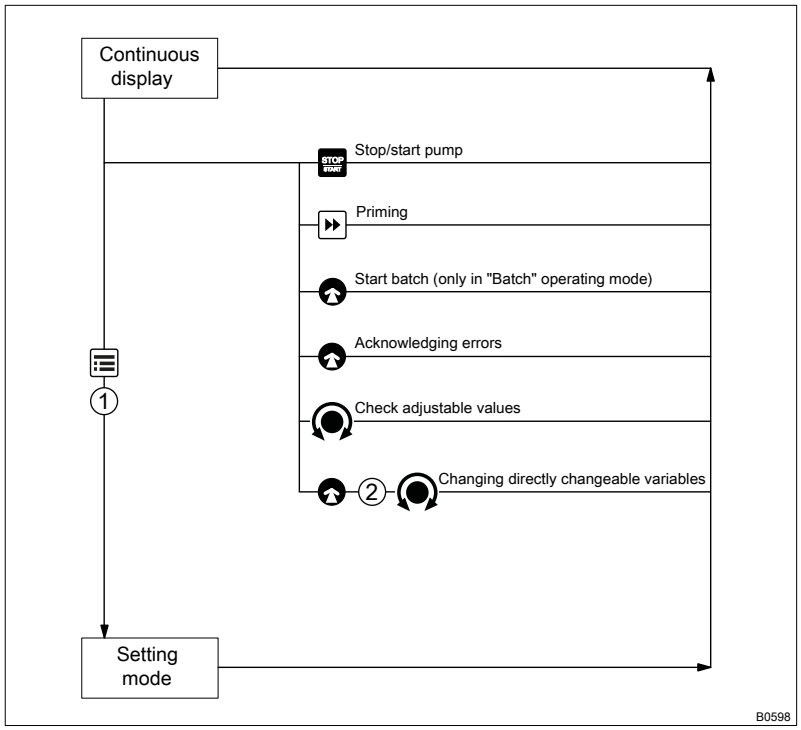

Fig. 36: Control options using keys and locking options

Press *[Clickwheel]*
Turn *[Clickwheel]*
① "Lock menu"
② "Lock all"

13 Maintenance

WARNING!
It is mandatory that you read the safety information and specifications in the "Storage, Transport and Unpacking" chapter prior to shipping the pump.

WARNING!
Fire hazard with flammable media
Only with combustible media: These may start to burn when combined with oxygen.

– During filling and draining of the liquid end, an expert must ensure that feed chemical does not come into contact with oxygen.

CAUTION!
Warning of feed chemical spraying around
Feed chemical can spray out of the hydraulic components if they are manipulated or opened due to pressure in the liquid end and adjacent parts of the system.

– Disconnect the pump from the mains power supply and ensure that it cannot be switched on again by unauthorised persons.
– Depressurise the system before commencing any work on hydraulic parts.

Third party spare parts for the pumps may lead to problems when pumping.

– *Use only original spare parts.*
– *Use the correct spare parts kits. In the event of doubt, refer to the exploded views and ordering information in the appendix.*

Standard liquid ends:

Interval	Maintenance work	Personnel
Quarterly*	■ Check the metering diaphragm for damage** - refer to "Repair". ■ Check that the hydraulic lines are fixed firmly to the liquid end. ■ Check that the suction valve and discharge valve are fitted tightly. ■ Check that the entire liquid end is leak-tight - particularly around the leakage hole - refer to Fig. 37. ■ Check that the flow is correct: Press ⏩ *[Priming]* to allow the pump to prime briefly. ■ Check that the electrical connections are intact. ■ Check the integrity of the housing. ■ Check that the dosing head screws are tight.	Technical personnel

* Under normal loading (approx. 30% of continuous operation)

Under heavy loading (e.g. continuous operation): Shorter intervals.

** Check the diaphragm frequently with feed chemicals that put particular pressure on the diaphragm, e.g. those containing abrasive additives.

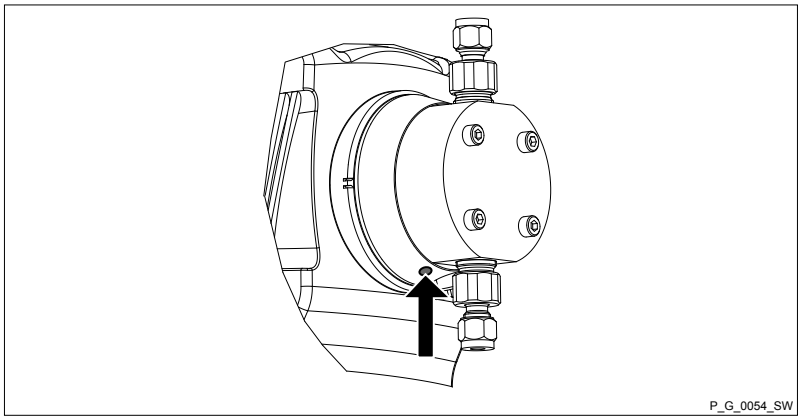

Fig. 37: Leakage hole

Liquid ends with bleed valve:

Interval	Maintenance work
Quarterly*	In addition: ■ Check that the bypass line is fixed firmly to the liquid end. ■ Check that the bleed valve is tight. ■ Check the discharge and bypass line for kinks. ■ Check that the bleed valve is operating correctly.

* Under normal loading (approx. 30% of continuous operation).

Under heavy loading (e.g. continuous operation): Shorter intervals.

Tightening torque

Data	Value	Unit
Tightening torque for screws:	4.5 ... 5.0	Nm

14 Repairs

Safety information

WARNING!

Danger of electric shock

Unauthorised repairs inside the pump can result in an electric shock.

For this reason, only allow a ProMinent branch or representative to perform repair inside the pump, in particular the following:

- Replacement of damaged mains connection lines
- Replacement of fuses
- Replacement of electronic control

WARNING!

It is mandatory that you read the safety information and specifications in the "Storage, Transport and Unpacking" chapter prior to shipping the pump.

WARNING!

Contact with the feed chemical

Parts that come into contact with the feed chemical are exposed and touched during repair work.

- Protect yourself against the feed chemical in case it is hazardous. Read the safety data sheet on the feed chemical.

CAUTION!

Warning of feed chemical spraying around

Feed chemical can spray out of the hydraulic components if they are manipulated or opened due to pressure in the liquid end and adjacent parts of the system.

- Disconnect the pump from the mains power supply and ensure that it cannot be switched on again by unauthorised persons.
- Depressurise the system before commencing any work on hydraulic parts.

WARNING!

Fire hazard with flammable media

Only with combustible media: These may start to burn when combined with oxygen.

- During filling and draining of the liquid end, an expert must ensure that feed chemical does not come into contact with oxygen.

14.1 Cleaning Valves

Warning of faulty operation

Refer to the exploded drawings in the appendix when working on the unit.

14.2 Replacing the Diaphragm

- If necessary take protective measures.
- Adhere to the material safety data sheet for the feed chemical.
- Prevent the escape of feed chemical.
- Ensure that the system is at atmospheric pressure.

1. Empty the liquid end (turn the liquid end upside down and allow the feed chemical to run out; flush out with a suitable medium; flush the liquid end thoroughly when using hazardous feed chemicals!)
2. Set up ☰ ➔ *'Service ➔ Diaphragm replacement ➔ To replacement position'*

   ⇨ The pump moves the diaphragm away from the backplate.

> *Now leave the pump connected to the mains/ power supply so that this state is maintained.*

3. Unscrew the hydraulic connectors on the discharge and suction side.
4. With types with coarse/fine bleed valve: Firstly remove the coarse/ fine bleed valve (grip), then lift off the cover of the liquid end with a screw driver.

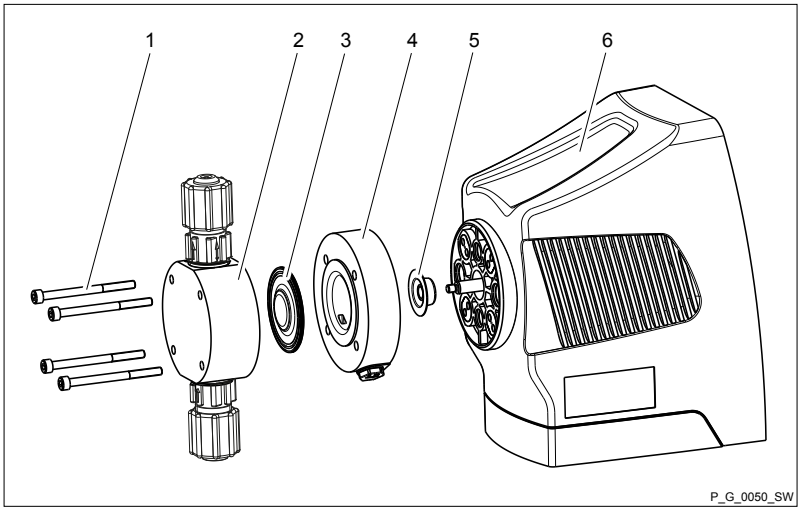

Fig. 38: Partially exploded view of liquid end

1 Screws
2 Dosing head
3 Diaphragm
4 Backplate
5 Safety diaphragm
6 Pump housing

5. Remove the screws (1).
6. Remove the dosing head (2) plus screws (1) from the pump - see figure
7. Loosen the diaphragm (3) from the drive axle with a gentle backwards turn in an anticlockwise direction.
8. Unscrew the diaphragm (3) completely from the drive axle.
9. Remove the backplate (4) from the pump housing (6).
10. Check the condition of the safety diaphragm (5) and replace if necessary.
11. Push the safety diaphragm (5) onto the drive axle only until it lies flush with the pump housing (6) and no further!

12. Tentatively screw the new diaphragm (3) onto the drive axle up to the stop - ensure that this is successful, otherwise the pump will subsequently not meter correctly!
13. Unscrew the diaphragm (3) again.
14. Place the backplate (4) on the pump housing (6).

CAUTION!
- Make sure that the leakage hole points downwards when the pump is subsequently fitted - see figure in the "Maintenance" chapter!
- Place the backplate (4) immediately into the correct position on the pump housing (6)! Do not twist the backplate on the pump housing to prevent the safety diaphragm (5) becoming warped!

15. Place the diaphragm (3) into the backplate (4).

CAUTION!
- Do not over-tighten the diaphragm (3) in the following step!
- Ensure that the backplate (4) remains in its position so that the safety diaphragm does not become warped!

16. Hold the backplate (4) firmly and screw the diaphragm (3) in a clockwise direction until it is sitting tightly.
17. Place the dosing head (2) with the screws (1) onto the diaphragm (3) and the backplate (4) - ensure that the suction connector points downwards when the pump is in its subsequent fitting position.
18. Set up ☰ ➔ *'Service* ➔ *Diaphragm replacement* ➔ *Back'*

    ⇨ The pump moves the diaphragm back to the backplate.
19. Gently tighten the screws (1) and then tighten them diagonally. See below for the tightening torque.
20. With types with coarse/fine bleed valve: Allow the cover of the liquid end to rest in the dosing head, then press the grip of the bleed valve into the coarse/fine bleed valve.

Check the tightening torque of the screws after 24 hours of operation!

Tightening torque

Data	Value	Unit
Tightening torque for screws:	4.5 ... 5.0	Nm

14.3 Cleaning the Diaphragm Rupture Indicator

WARNING!

Warning of unnoticed escaping of feed chemical

After the diaphragm rupture indicator has been triggered, any residue of feed chemical residues can interfere with it.

- After the diaphragm rupture indicator has been triggered, clean and test it.

1. First replace the liquid end diaphragm - see above!
2. Unscrew the diaphragm rupture indicator using an SW 14 open-ended spanner.
3. Clean the diaphragm rupture indicator with suitable liquid - if possible using water (polysulphone material).
4. Test the connected diaphragm rupture indicator: fully immerse the tapered section at the front in water.
   ⇨ The continuous display indicates a diaphragm rupture.
5. Thoroughly dry the diaphragm rupture indicator.
   ⇨ The continuous display no longer indicates a diaphragm rupture.
6. Screw the clean and dry diaphragm rupture indicator into the hole until hand-tight and liquid-tight - without using tools!

15 Troubleshooting

Safety information

WARNING!

Warning of dangerous or unknown feed chemical

Should a dangerous or unknown feed chemical be used: It may escape from the hydraulic components when working on the pump.

- Take appropriate protective measures before working on the pump (e.g. safety glasses, safety gloves, ...). Observe the safety data sheet for the feed chemical.
- Drain and flush the liquid end before working on the pump.

CAUTION!

Warning of feed chemical spraying around

Feed chemical can spray out of the hydraulic components if they are manipulated or opened due to pressure in the liquid end and adjacent parts of the system.

- Disconnect the pump from the mains power supply and ensure that it cannot be switched on again by unauthorised persons.
- Depressurise the system before commencing any work on hydraulic parts.

WARNING!

Fire hazard with flammable media

Only with combustible media: These may start to burn when combined with oxygen.

- During filling and draining of the liquid end, an expert must ensure that feed chemical does not come into contact with oxygen.

15.1 Faults Without a Fault Message

Faults without a fault message

Fault description	Cause	Remedy	Personnel
Pump does not prime in spite of full stroke motion and bleeding.	Minor crystalline deposits on the ball seat due to the valves drying out.	Take the suction hose out of the storage tank and thoroughly flush out the liquid end.	Technical personnel
	Serious crystalline deposits on the ball seat due to the valves drying out.	Dismantle the valves and clean them - refer to the "Repair" chapter.	Technical personnel
Fluid is escaping from the backplate.	The screws in the dosing head are too loose.	Tighten the screws in the dosing head crosswise - refer to the "Repair" chapter for the tightening torque.	Instructed personnel
	The diaphragm is not leaktight.	Replace the diaphragm - refer to the "Repair" chapter. If a diaphragm rupture has been indicated, clean the diaphragm rupture indicator - refer to the "Repair" chapter.	Technical personnel
Green LED display (operating indicator) does not light up.	The wrong mains voltage or no mains voltage is connected.	The specified mains voltage as per the voltage specification can be found on the nameplate.	Electrician

15.2 Fault Messages

In the event of a fault:

- The red LED display lights up.
- A message and a symbol then appear on the LCD screen.
- The pump stops.

Fault description	Cause	Remedy	Personnel
The identifier appears followed by the message *'Level error!'*	The fluid level in the storage tank has reached "Liquid level low 2nd stage".	Fill the storage tank.	Technical personnel
The *'Storage tank overflow'* message appears.	The stroke memory has overflowed.	Remedy the cause (such as too low a factor, too high a contact frequency ...), then: Press the *[Clickwheel]* (think of the consequences for the process!).	Technical personnel
The identifier I < 4 mA appears followed by the message *'Input signal < 4 mA'*.	The pump is in *'Analogue'* operating mode, a fault behaviour has been programmed in the *'Analogue'* menu and the control current has fallen below 4 mA.	Clear the cause of the low control current or switch the programming of the fault behaviour to *'off'* - see chapter "Set Up"-"Settings"-"Operating mode"-"Analogue".	Technical personnel
The identifier I > 20 mA appears followed by the message *'Input signal > 20 mA'*.	The pump is in *'Analogue'* operating mode, a fault behaviour has been programmed in the *'Analogue'* menu and the control current has risen above 20 mA.	Clear the cause of the high control current or switch the programming of the fault behaviour to *'off'* - see chapter "Set Up"-"Settings"-"Operating mode"-"Analogue".	Technical personnel
The identifier I < Imin appears followed by the message *'Control signal < Imin'*.	The pump is in *'Analogue'* operating mode-"xx side band", a fault behaviour has been programmed in the *'Analogue'* menu and the control current has fallen below 4 mA.	Clear the cause of the low control current or switch the programming of the fault behaviour to *'off'* - see chapter "Set Up"-"Settings"-"Operating mode"-"Analogue".	Technical personnel
The identifier I > Imax appears followed by the message *'Control signal > Imax'*.	The pump is in *'Analogue'* operating mode-"xx side band", a fault behaviour has been programmed in the *'Analogue'* menu and the control current has risen above 20 mA.	Clear the cause of the high control current or switch the programming of the fault behaviour to *'off'* - see chapter "Set Up"-"Settings"-"Operating mode"-"Analogue".	Technical personnel
The identifier appears followed by the message *'Defective stroke metering'*.	The dosing monitor reported more defective strokes than was set in the *'Inputs/Outputs'* menu.	Press the *[Clickwheel]*. Investigate and clear the cause.	
The identifier appears followed by the message *'Diaphragm rupture'*.	The diaphragm is broken.	Replace the diaphragm and clean the diaphragm rupture indicator, refer to the "Repair" chapter.	Technical personnel
The identifier P+ appears followed by the message *'Overload '*.	The pump has detected too high a back pressure.	Rectify the cause.	Technical personnel
The identifier "Temperature" appears followed by the message *'Temperature'* and the pump remains idle.	The ambient temperature is too high.	Lower the ambient temperature. The pump starts up automatically.	Technical personnel
	The temperature is too high.	Rectify the cause. The pump starts up automatically.	Technical personnel
The identifier appears followed by the message *'Air in dosing head'*.	Gas bubbles in the liquid end (leaks, gaseous medium, cavitation).	Bleed the liquid end and rectify the cause. Seal the system or slow the suction stroke.	Technical personnel

Fault description	Cause	Remedy	Personnel
The identifier appears followed by the message *'Mains/ power supply / PFC over-voltage'*.	The mains voltage is too high or too low or not connected.	Rectify the cause.	Technical personnel

15.3 Warning Messages

In the event of a warning:

- The yellow LED display lights up!
- A message and a symbol then appear on the LCD screen.

Fault description	Cause	Remedy	Personnel
'Level' and the identifier appear.	The fluid level in the storage tank has reached "Liquid level low 1st stage".	Fill the storage tank.	Instructed personnel
The identifier appears followed by the message *'Defective stroke metering'*.	The dosing monitor reported more defective strokes than was set in the *'Inputs/ Outputs'* menu.	Press the *[Clickwheel]*. Investigate and clear the cause.	
The identifier appears followed by the message *'Diaphragm rupture'*.	The diaphragm is broken.	Replace the diaphragm and clean the diaphragm rupture indicator, refer to the "Repair" chapter.	Technical personnel
The identifier appears followed by the message *'Overload '*.	The pump has detected too high a back pressure.	Rectify the cause.	Technical personnel
The identifier "Temperature" appears followed by the message *'Temperature'*.	The ambient temperature is too high.	Lower the ambient temperature.	Technical personnel
	The temperature is too high.	Rectify the cause.	Technical personnel
The identifier appears followed by the message *'Air in dosing head'*.	Gas bubbles in the liquid end (leaks, gaseous medium, cavitation).	Bleed the liquid end and rectify the cause. Seal the system or slow the suction stroke.	Technical personnel
The identifier appears followed by the message *'Invalid metering volume'*.	The metering volume cannot be metered.	Adapt the metering parameters.	Technical personnel

15.4 All Other Faults

Please contact the responsible ProMinent branch or representative!

16 Decommissioning

Decommissioning

WARNING!

Danger from chemical residues

There is normally chemical residue in the liquid end and on the housing after operation. This chemical residue could be hazardous to people.

- It is mandatory that the safety notes in the "Storage, Transport and Unpacking" chapter are read before shipping or transport.
- Thoroughly clean the liquid end and the housing of chemicals and dirt. Adhere to the material safety data sheet for the feed chemical.

WARNING!

Warning of dangerous or unknown feed chemical

Should a dangerous or unknown feed chemical be used: It may escape from the hydraulic components when working on the pump.

- Take appropriate protective measures before working on the pump (e.g. safety glasses, safety gloves, ...). Observe the safety data sheet for the feed chemical.
- Drain and flush the liquid end before working on the pump.

WARNING!

Fire hazard with flammable media

Only with combustible media: These may start to burn when combined with oxygen.

- During filling and draining of the liquid end, an expert must ensure that feed chemical does not come into contact with oxygen.

CAUTION!

Warning of feed chemical spraying around

Feed chemical can spray out of the hydraulic components if they are manipulated or opened due to pressure in the liquid end and adjacent parts of the system.

- Disconnect the pump from the mains power supply and ensure that it cannot be switched on again by unauthorised persons.
- Depressurise the system before commencing any work on hydraulic parts.

Danger of damage to the device

Take into account the information in the "Storage, Transport and Unpacking" chapter if the system is decommissioned for a temporary period.

1. Disconnect the pump from the mains power supply.
2. Drain the liquid end by turning the pump upside down and allowing the feed chemical to run out.

3. Flush the liquid end with a suitable medium; flush the dosing head thoroughly when using hazardous feed chemicals!

Disposal

CAUTION!

Risk to the environment from the battery

There is a battery in the pump, which can have a toxic effect on the environment.

- Separate the battery from the remaining parts.
- Note the pertinent regulations currently applicable in your country!

CAUTION!

Environmental hazard due to electronic waste

There are electronic components in the pump, which can have a toxic effect on the environment.

- Separate the electronic components from the remaining parts.
- Note the pertinent regulations currently applicable in your country!

17 Technical Data

17.1 Performance Data

gamma/ X operating at 200 strokes/minute and 100 % stroke length

Type	Minimum pump capacity at maximum back pressure			Connector size outside ∅ x inside ∅	Suction lift**	Priming lift****	Max. priming pressure on the suction side
	bar	l/h	ml/stroke	mm	m WS	m WS	bar
gamma/ X							
2002	20	2.05	0.17	6x3	6.0	2.5	5.5
1602	16	2.3	0.19	6x4	6.0	2.5	5.5
1604	16	3.6	0.30	6x4	6.0	3.0	3
0708	7	7.6	0.63	8x5	6.0	2.0	2
0414	4	14.0	1.17	8x5	3.0	2.5	1.5
0220	2	19.7	1.64	12x9	2.0	2.0	1
2504	25	3.8	0.32	8x4	6.0	3.0	3
1009	10	9.0	0.75	8x5	6.0	3.0	2
0715	7	14.5	1.21	8x5	4.0	3.0	1.5
0424	4	24.0	2.00	12x9	3.0	3.0	1
0245	2	45.0	3.70	12x9	2.0	2.0	0.8
gamma/ X metering pumps with self-bleeding dosing head SEK*							
1602	16	1.3	0.11	6x4	2.1	1.8	0.5
1604	16	2.4	0.21	8x5	2.7	1.8	0.5
0708	7	6.8	0.57	8x5	2.0	1.8	0.5
0414	4	12.0	1.00	8x5	2.0	1.8	0.5
0220	2	18.0	1.50	12x9	2.0	1.8	0.5
1009	10	8.0	0.67	8x5	3.0	1.8	0.5
0715	7	12.0	1.00	8x5	2.5	1.8	0.5
0424	4	20.0	1.67	12x9	2.5	1.8	0.5

gamma/ X metering pumps with dosing heads for higher-viscosity media (HV) have a 10 ... 20 % lower capacity and are not self-priming. Connection G 3/4-DN 10 with hose nozzle d16-DN10.

* - The given performance data constitutes guaranteed minimum values, calculated using water as the medium at room temperature. The bypass connection with a self-bleeding dosing head SEK is 6x4 mm.

** - Suction lift with a filled suction line and filled liquid end. With self-bleeding dosing head with air in the suction line.

*** - The connector width is 6 mm on SST material versions.

**** - Priming lift with clean and moist valves. Priming lift at 100% stroke length and free outlet or opened bleed valve.

All data calculated with water at 20 °C.

17.2 Accuracy

17.2.1 Standard Liquid End

Data	Value	Unit
Capacity range of the series	-5 ... +10	% *
Reproducibility	±2	% **

* - at max. stroke length and max. operating pressure for all material versions

** - at constant conditions and min. 30 % stroke length

17.2.2 Self-Bleeding Liquid End

As the self-bleeding liquid end is used with outgassing media and when operating with air bubbles, no dosing accuracy or reproducibility can be provided.

The recommended minimum stroke length with self-bleeding dosing pumps is 50 %.

17.3 Viscosity

The liquid ends are suitable for the following viscosity ranges:

Design	Range	Unit
Standard	0 ... 200	mPas
With valve springs	200 ... 500	mPas
With HV head	500 ... 3000*	mPas
Self-bleeding (SEK)	0 ... 50	mPas

* Even significantly higher with corrected adjusted installation. Contact Technical; Support in Heidelberg.

17.4 Material specifications

Standard liquid ends

Design	Dosing head	Suction/ pressure connector	Ball seat	Seals	Balls
PPE	Polypro-pylene	Polypro-pylene	EPDM	EPDM	Ceramic
PPB	Polypro-pylene	Polypro-pylene	FKM	FKM	Ceramic
PPT	Polypro-pylene	Polypro-pylene	PVDF	PTFE	Ceramic
NPE	Clear acrylic	PVC	EPDM	EPDM	Ceramic
NPB	Clear acrylic	PVC	FKM	FKM	Ceramic
NPT	Clear acrylic	PVC	PVDF	PTFE	Ceramic
PVT	PVDF	PVDF	PVDF	PTFE	Ceramic
TTT	PTFE with carbon	PTFE with carbon	Ceramic	PTFE	Ceramic
SST	Stainless steel 1.4404	Stainless steel 1.4404	Ceramic	PTFE	Ceramic

Self-bleeding design only in material versions PP and NP with a valve spring made of Hastelloy C and a PVDF valve insert.

Diaphragm: with PTFE coating.

FKM = fluorine rubber

Pump

Housing parts: polyphenylene ether (PPE with fibreglass)

17.5 Electrical Data

Design: 100 - 230 V ±10 %, 50/60 Hz, gamma/ X GMXa

Parameter	M70	M85
Nominal power**, approx.	25 W	30 W
Current I eff	0.24 … 0.13 A	0.3 … 0.17 A
Peak current	3.5 … 1.3 A	3.7 … 1.5 A
Switch on peak current (for 3 ...5 ms)	20 A	20 A
Fuse*	2.5 AT	2.5 AT

** with relay closed: The nominal power rises by 1 W.

* Fuses must have VDE, UL and CSA certification. e.g. type 19195 manufactured by Wickmann in compliance with IEC Publ. 127 - 2/3

17.6 Temperatures

Pump, fully assembled

Data	Value	Unit
Storage and transport temperature:	-20 … +50	°C
Ambient temperature in operation (power end/drive and control):	-10 … +45	°C
Medium temperature:	-10 °C ... see following table	

Liquid end

Material version	Long term	Temporary *
PP	50 °C	100 °C
NP	45 °C	60 °C
PV	50 °C	120 °C
SS	50 °C	120 °C
TT	50 °C	120 °C

* Max. temp., for 15 min at max. 2 bar, depending on the ambient temperature

17.7 Climate

Data	Value	Unit
Maximum air humidity*:	95	% relative humidity

* non-condensing

Test: Humid heat, cyclical

in accordance with EN 680068-2-30: 2005

17.8 Degree of Protection and Safety Requirements

Degree of protection

Protection against accidental contact and humidity:

IP 66 according to DIN EN 60529
NEMA 4X/indoor according to NEMA 250

Safety requirements

Degree of protection:

1 - mains power connection with protective earth conductor

17.9 Compatibility

Unlike the gamma/ L product range, compatibility is guaranteed with the following components:

- Control cable Beta® 5-wire for "External" function.
- Control cable gamma/Vario 2-, 4- and 5-wire for the "External" function
- Level switch 2-stage (gamma / Beta® / delta®)
- Dosing line cross-sections for gamma / Beta®
- Standard connector kit for gamma / Beta®
- Wall brackets for gamma / Beta®

- Dosing tanks and fixing plates
- Distance between suction and pressure connector
- Distance between the connectors and the pump fixing holes
- Distance between the pump fixing holes
- Identical use of accessories, such as back pressure valves, multifunctional valves and flushing assembly
- Compatibility of resistance by the equivalence of the material used for the liquid ends

Compatibility to the gamma/ L product range is not guaranteed for the following points:

- External dimensions of the pump
- Distance between the support surface for the mounting foot and the centre of the dosing head
- Dosing monitor

17.10 Shipping Weight

Shipping weight of gamma/ X types - in kg

Material	Types	
	2002, 1602, 1604, 0708, 0414, 0220	2504, 1009, 0715, 0424, 0245
PP, NP, PV, TT	3.6 .. 3.7	4.9 … 5.2
SS	4.1 … 5.0	5.5 … 7.0

17.11 Sound pressure level

Sound pressure level

Sound pressure level LpA < 70 dB according to EN ISO 20361

at maximum stroke length, maximum stroke rate, maximum back pressure (water)

18 Exploded Drawings and Ordering Information

18.1 Exploded drawings

Liquid end gamma/ X 1602 - 1604 PP_2

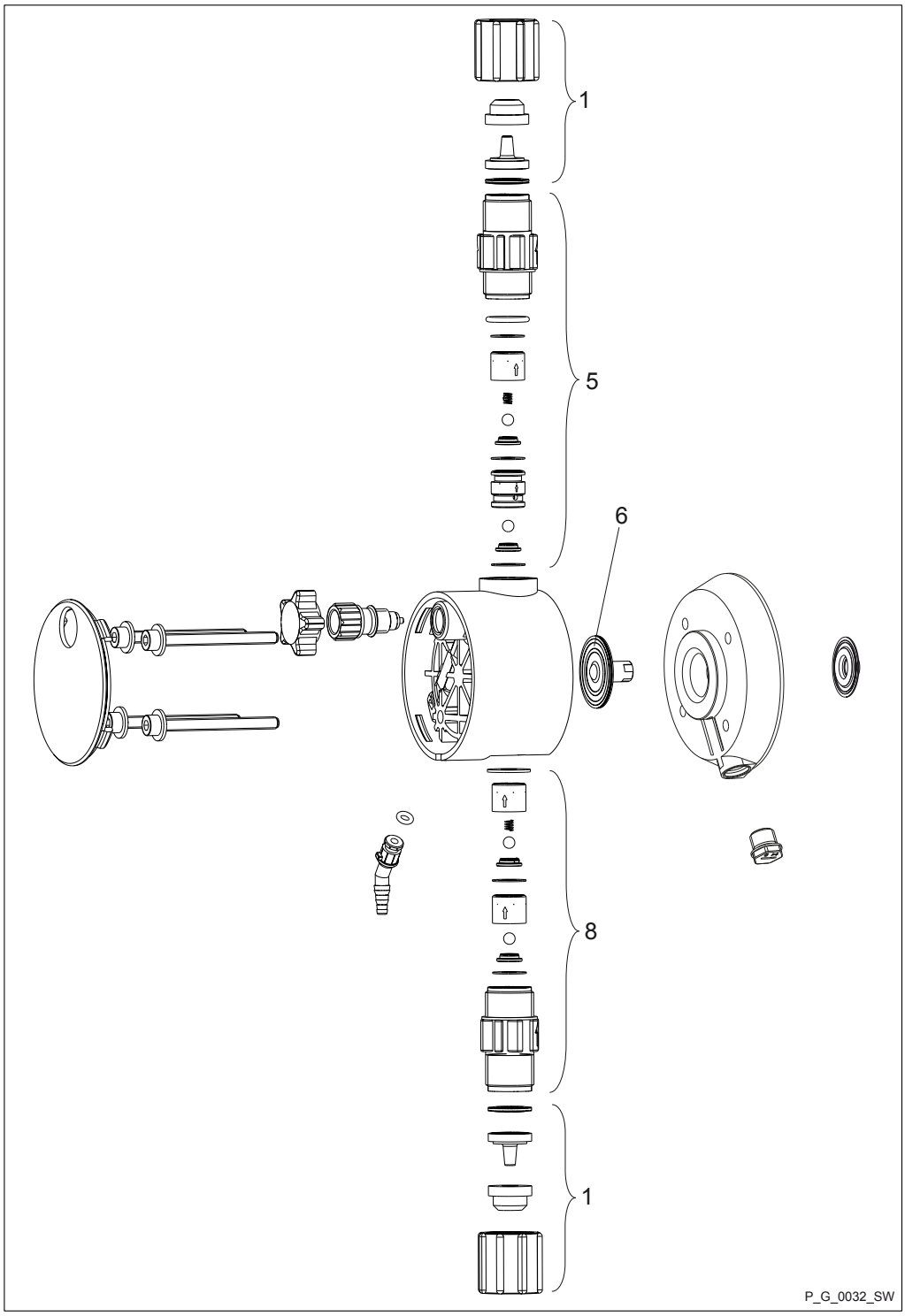

Fig. 39

Spare parts for liquid end gamma/ X 1602 - 1604 PP_2

Item	Description
1	Connector kit
5	Discharge valve
6	Diaphragm
8	Suction valve

Liquid end gamma/ X 1602 PP_2

	PPE2	PPB2	PPT2
Liquid end	1050931	1050900	1050942
Spare parts kit	1001646	1001654	1023109
Diaphragm	1000246	1000246	1000246

Liquid end gamma/ X 1604 PP_2

	PPE2	PPB2	PPT2
Liquid end	1050932	1050901	1050943
Spare parts kit	1039989	1039987	1035332
Diaphragm	1034612	1034612	1034612

Liquid end gamma/ X 0708 (1009) - 0220 (0424) PP_2

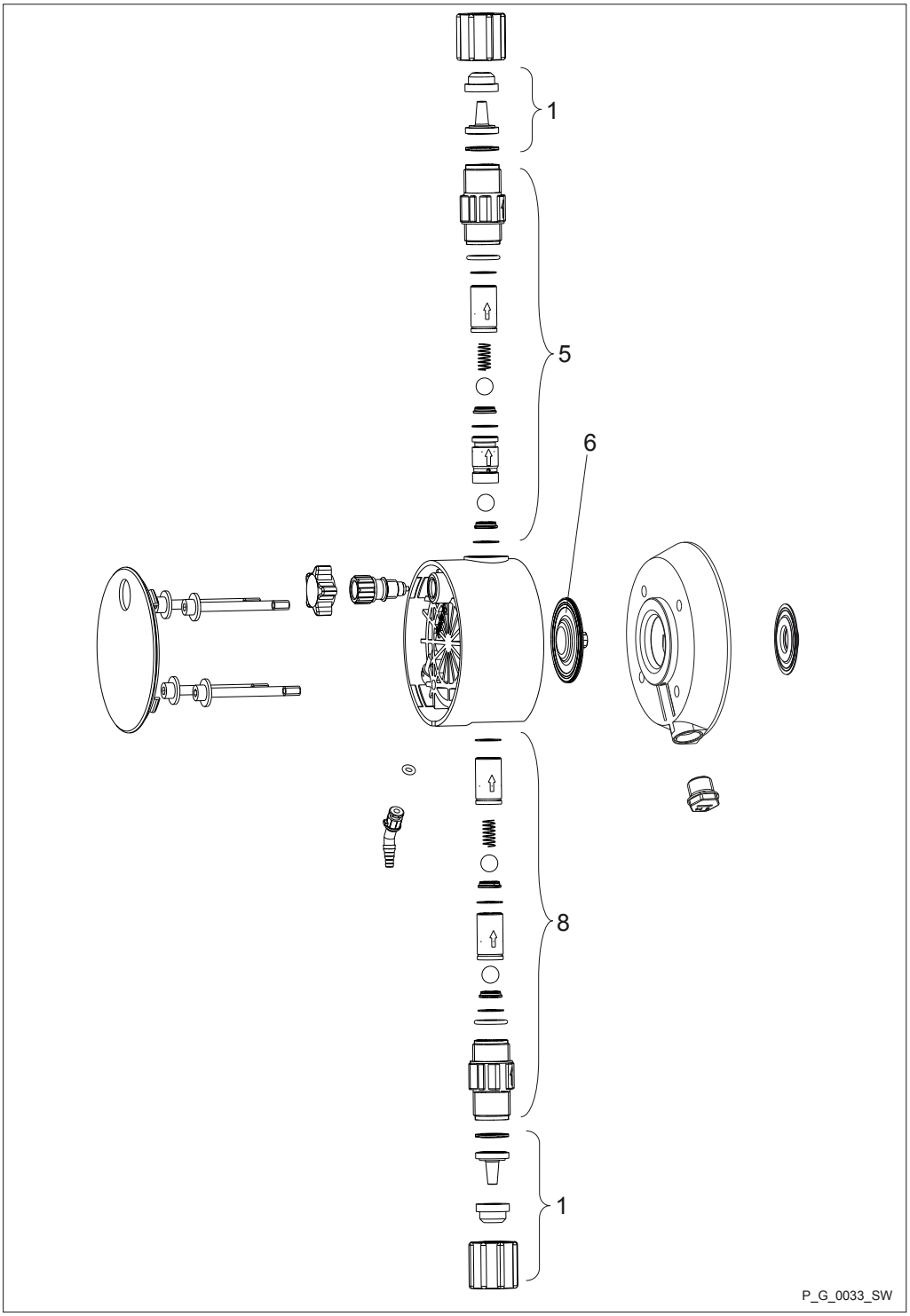

Fig. 40

Spare parts for liquid end gamma/ X 0708 (1009) - 0220 (0424) PP_2

Item	Description
1	Connector kit
5	Discharge valve
6	Diaphragm
8	Suction valve

Liquid end gamma/ X 0708 (1009) PP_2

	PPE2	PPB2	PPT2
Liquid end	1050933	1050902	1050944
Spare parts kit	1001648	1001656	1023111
Diaphragm	1000248	1000248	1000248

Liquid end gamma/ X 0414 (0715) PP_2

	PPE2	PPB2	PPT2
Liquid end	1050934	1050903	1050945
Spare parts kit	1001649	1001657	1023112
Diaphragm	1000249	1000249	1000249

Liquid end gamma/ X 0220 (0424) PP_2

	PPE2	PPB2	PPT2
Liquid end	1050935	1050924	1050946
Spare parts kit	1051096	1051085	1051129
Diaphragm	1045456	1045456	1045456

Liquid end gamma/ X 0245 PP without bleed valve

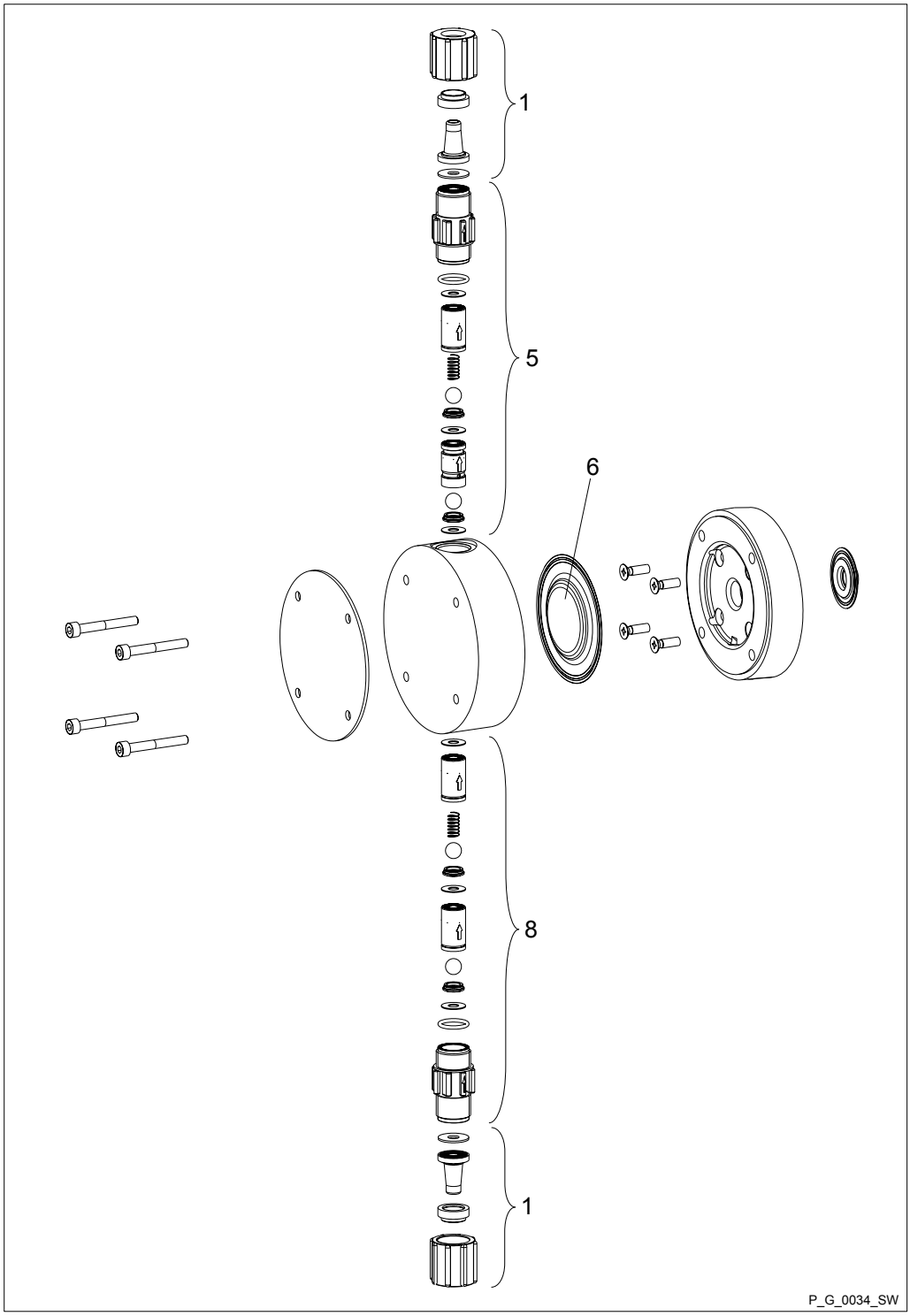

Fig. 41

Spare parts for liquid end gamma/ X 0245 PP without bleed valve

Item	Description
1	Connector kit
5	Discharge valve
6	Diaphragm
8	Suction valve

Liquid end gamma/ X 0245 without bleed valve

	PPE	PPB	PPT
Liquid end	1050936	1050925	1050947
Spare parts kit	1051097	1051086	1051130
Diaphragm	1045443	1045443	1045443

Liquid end gamma/ X 1602 - 2504 NP with and without bleed valve

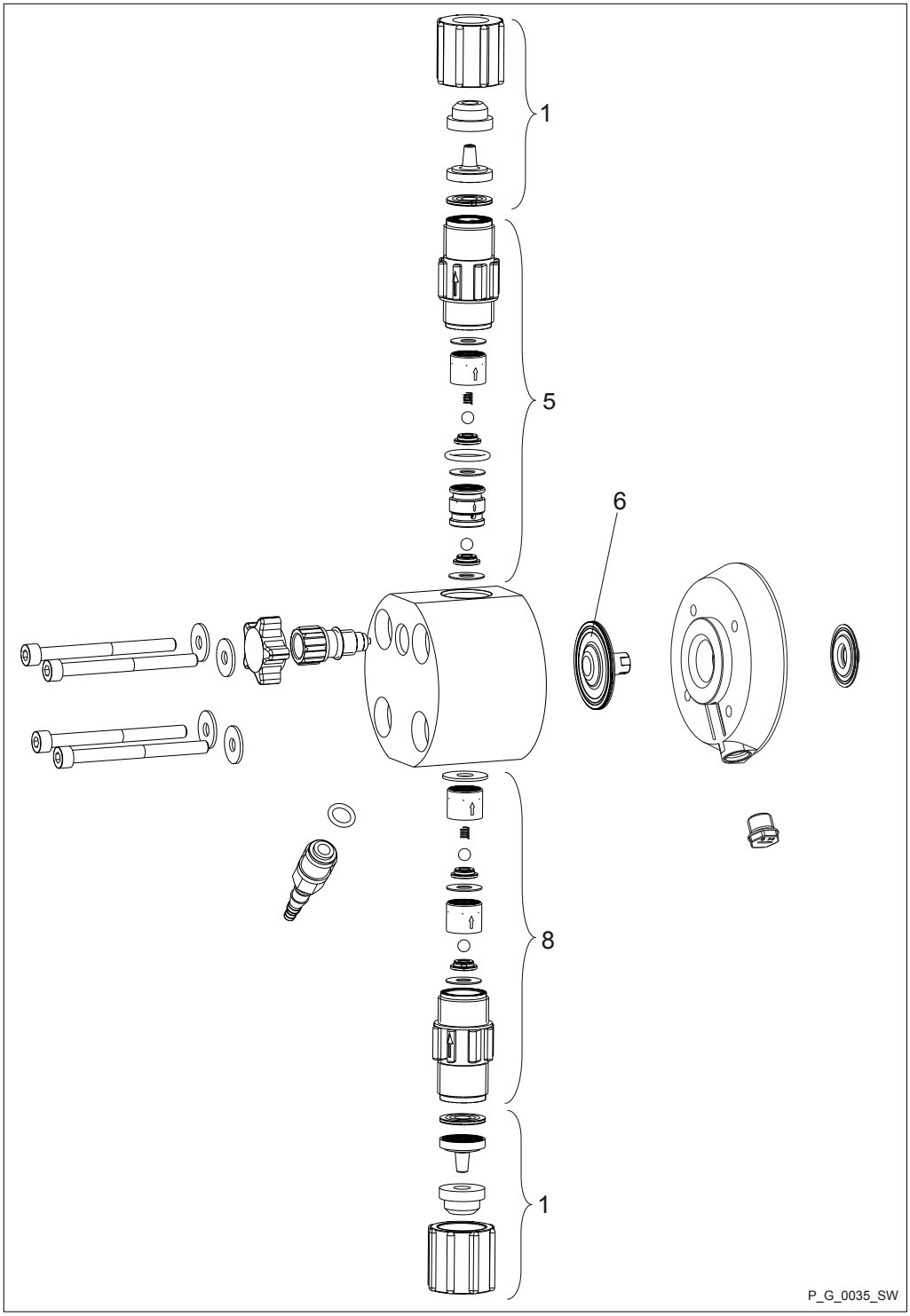

Fig. 42

Spare parts for liquid end gamma/ X 1602 - 2504 NP with and without bleed valve

Item	Description
1	Connector kit
5	Discharge valve
6	Diaphragm
8	Suction valve

Liquid end gamma/ X 2002 with and without bleed valve

	NPE	NPB	NPT
Liquid end with bleed valve	1050965	1050948	1050982
Liquid end without bleed valve	1050971	1050954	1050988
Spare parts kit	1001715	1001723	1023109
Diaphragm	1000246	1000246	1000246

Liquid end gamma/ X 1602 with and without bleed valve

	NPE	NPB	NPT
Liquid end with bleed valve	1051073	1051071	1051087
Liquid end without bleed valve	1051084	1051072	1051088
Spare parts kit	1001715	1001723	1023109
Diaphragm	1000246	1000246	1000246

Liquid end gamma/ X 2504 with and without bleed valve

	NPE	NPB	NPT
Liquid end with bleed valve	1051175	1051163	1051179
Liquid end without bleed valve	1051176	1051174	1051180
Spare parts kit	1039988	1039986	1035332
Diaphragm	1034612	1034612	1034612

Liquid end gamma/ X 1604 with and without bleed valve

	NPE	NPB	NPT
Liquid end with bleed valve	1050966	1050949	1050983
Liquid end without bleed valve	1050972	1050955	1050989
Spare parts kit	1039988	1039986	1035332
Diaphragm	1034612	1034612	1034612

Liquid end gamma/ X 0708 (1009) - 0220 (0424) NP with and without bleed valve

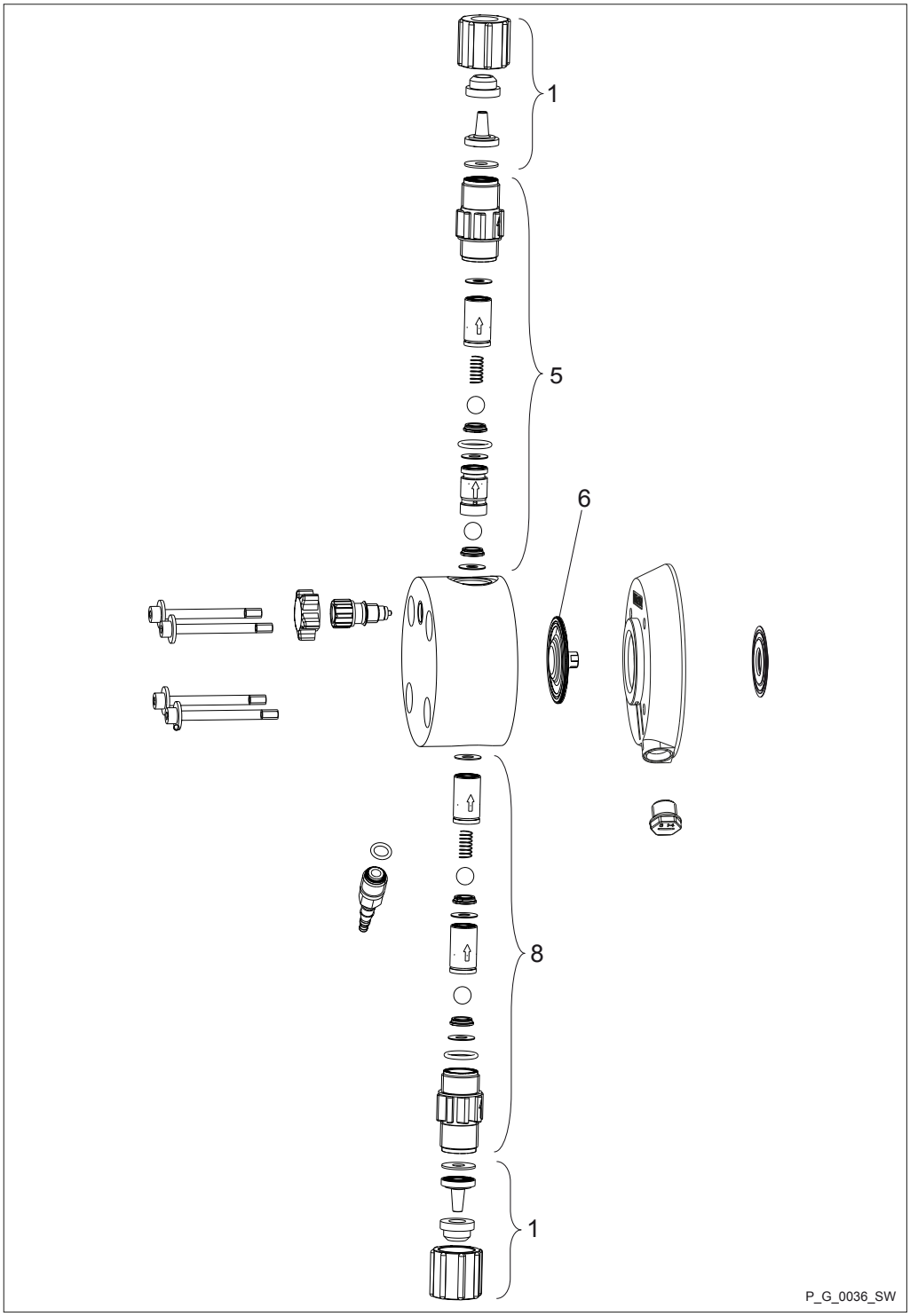

Fig. 43

Spare parts for liquid end gamma/ X 0708 (1009) - 0220 (0424) NP with and without bleed valve

Item	Description
1	Connector kit
5	Discharge valve
6	Diaphragm
8	Suction valve

Liquid end gamma/ X 0708 (1009) with and without bleed valve

	NPE	NPB	NPT
Liquid end with bleed valve	1050967	1050950	1050984
Liquid end without bleed valve	1050973	1050956	1050990
Spare parts kit	1001717	1001725	1023111
Diaphragm	1000248	1000248	1000248

Liquid end gamma/ X 0414 (0715) with and without bleed valve

	NPE	NPB	NPT
Liquid end with bleed valve	1050968	1050951	1050985
Liquid end without bleed valve	1050974	1050957	1050991
Spare parts kit	1001718	1001726	1023112
Diaphragm	1000249	1000249	1000249

Liquid end gamma/ X 0220 (0424) with and without bleed valve

	NPE	NPB	NPT
Liquid end with bleed valve	1050969	1050952	1050986
Liquid end without bleed valve	1050975	1050958	1050992
Spare parts kit	1051118	1051107	1051129
Diaphragm	1045456	1045456	1045456

Liquid end gamma/ X 0245 NP with and without bleed valve

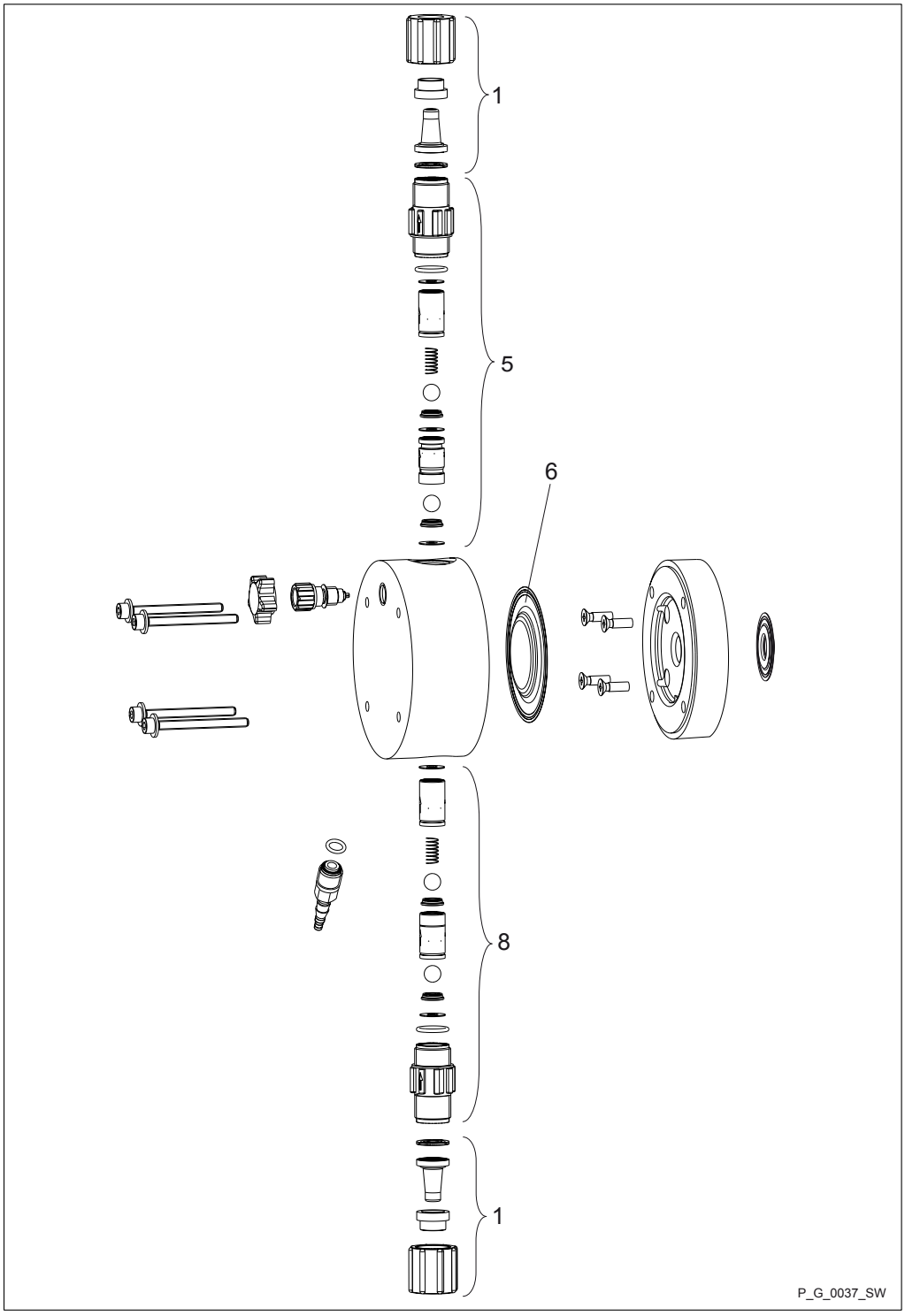

Fig. 44

Spare parts for liquid end gamma/ X 0245 NP with and without bleed valve

Item	Description
1	Connector kit
5	Discharge valve
6	Diaphragm
8	Suction valve

Liquid end gamma/ X 0245 with and without bleed valve

	NPE	NPB	NPT
Liquid end with bleed valve	1050970	1050953	1050987
Liquid end without bleed valve	1050976	1050959	1050993
Spare parts kit	1051119	1051108	1051130
Diaphragm	1045443	1045443	1045443

Liquid end gamma/ X 1602 -1604 PVT with bleed valve

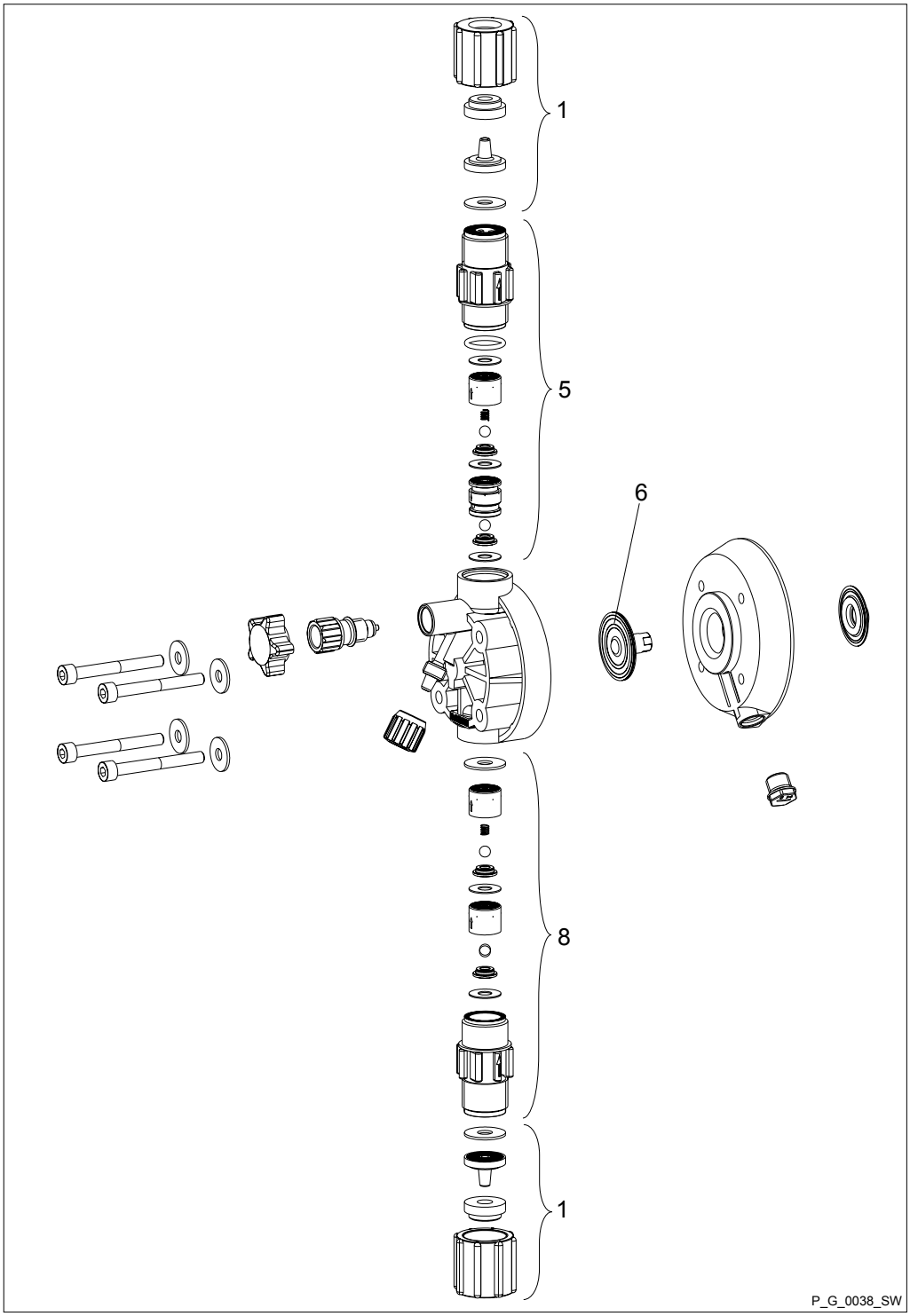

Fig. 45

Spare parts for liquid end gamma/ X 1602 -1604 PVT with bleed valve

Item	Description
1	Connector kit
5	Discharge valve
6	Diaphragm
8	Suction valve

Liquid end gamma/ X 1602 with bleed valve

	PVT
Liquid end	1050994
Spare parts kit	1023109
Diaphragm	1000246

Liquid end gamma/ X 1604 with bleed valve

	PVT
Liquid end	1050995
Spare parts kit	1035332
Diaphragm	1034612

Liquid end gamma/ X 0708 (1009) - 0220 (0424) PVT with bleed valve

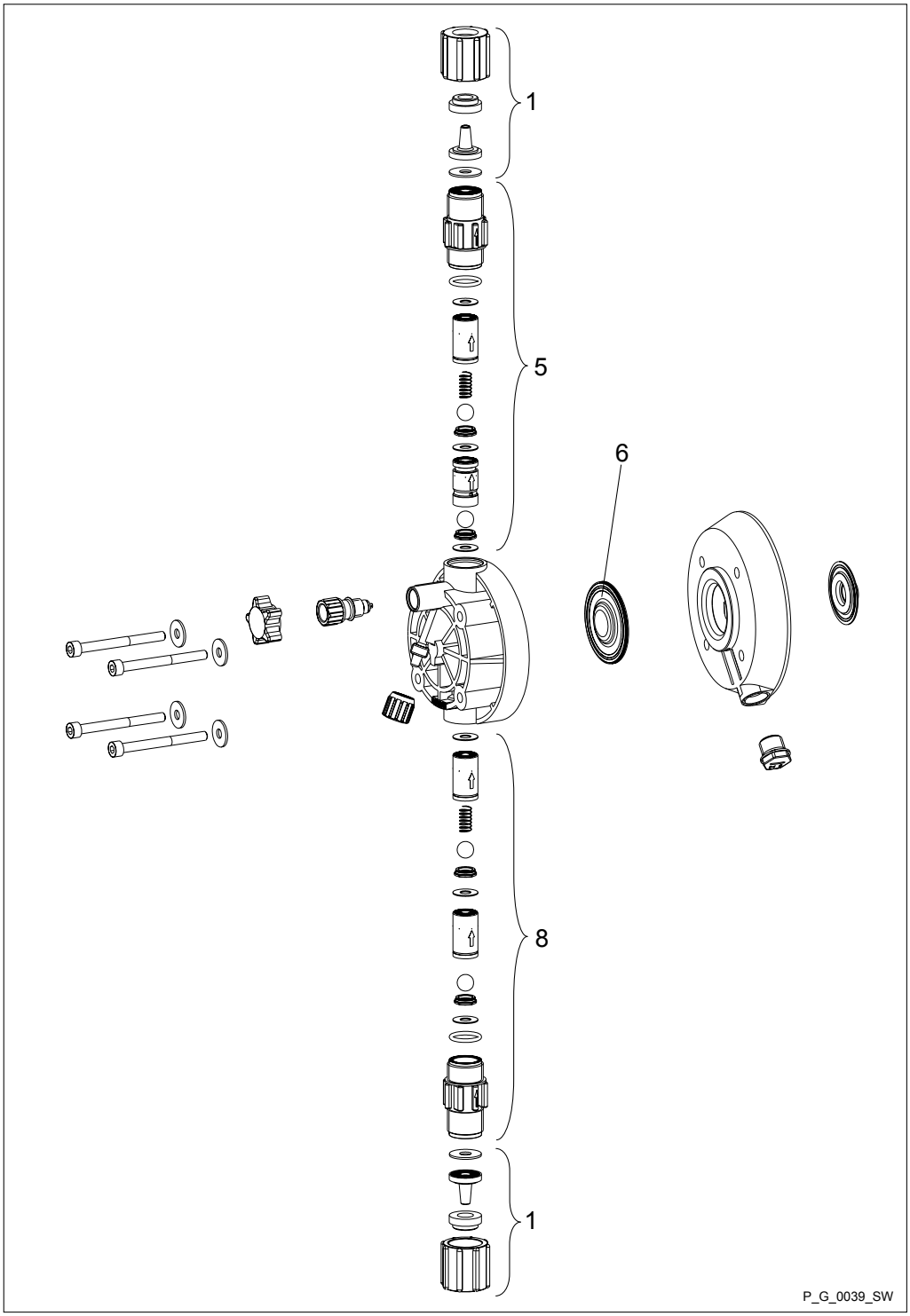

Fig. 46

Spare parts kit for liquid end gamma/ X 0708(1009) - 0220 (0424) PVT with bleed valve

Item	Description
1	Connector kit
5	Discharge valve
6	Diaphragm
8	Suction valve

Liquid end gamma/ X 0708 (1009) with bleed valve

	PVT
Liquid end	1050996
Spare parts kit	1023111
Diaphragm	1000248

Liquid end gamma/ X 0414 (0715) with bleed valve

	PVT
Liquid end	1050997
Spare parts kit	1023112
Diaphragm	1000249

Liquid end gamma/ X 0220 (0424) with bleed valve

	PVT
Liquid end	1050998
Spare parts kit	1051129
Diaphragm	1045456

Liquid end gamma/ X 0245 PVT without bleed valve

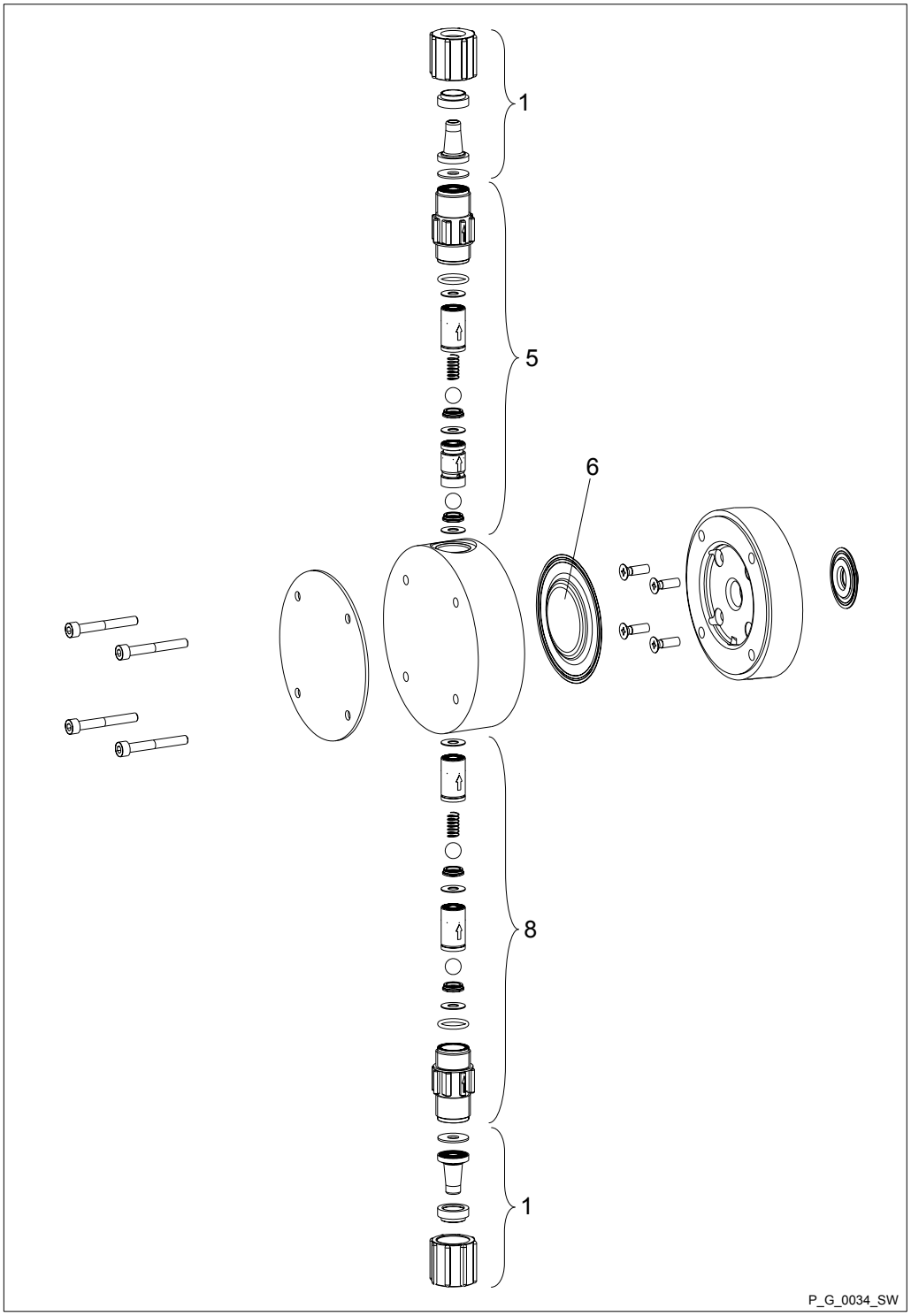

Fig. 47

Spare parts kit for liquid end gamma/ X 0245 PVT without bleed valve

Item	Description
1	Connector kit
5	Discharge valve
6	Diaphragm
8	Suction valve

Liquid end gamma/ X 0245 without bleed valve

	PVT
Liquid end	1050999
Spare parts kit	1051130
Diaphragm	1045443

Liquid end gamma/ X 1604 - 0220 (0424) PV HV, for high-viscosity feed chemicals

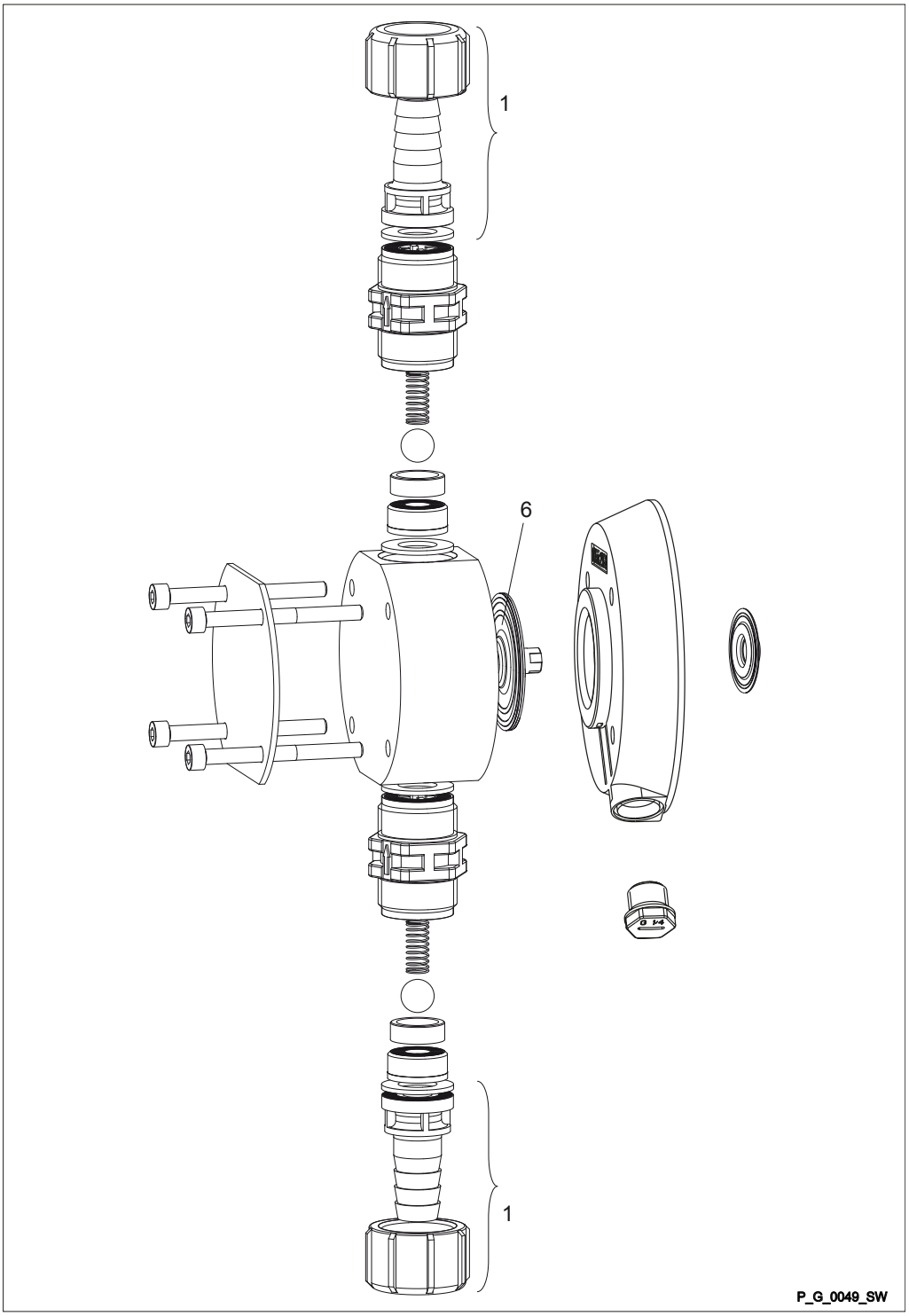

Fig. 48

Spare parts kit for liquid end gamma/ X 1604 - 0220 (0424) PV HV, for high-viscosity feed chemicals

Item	Description
1	Connector kit with hose nozzle
6	Diaphragm

Liquid end gamma/ X 1604

	PV HV
Liquid end	1051000
Spare parts kit	1035342
Diaphragm	1034612

Liquid end gamma/ X 0708 (1009)

	PV HV
Liquid end	1051001
Spare parts kit	1019067
Diaphragm	1000248

Liquid end gamma/ X 0414 (0715)

	PV HV
Liquid end	1051002
Spare parts kit	1019069
Diaphragm	1000249

Liquid end gamma/ X 0220 (0424)

	PV HV
Liquid end	1051003
Spare parts kit	1051134
Diaphragm	1045456

Liquid end gamma/ X 1602 - 1604 TTT

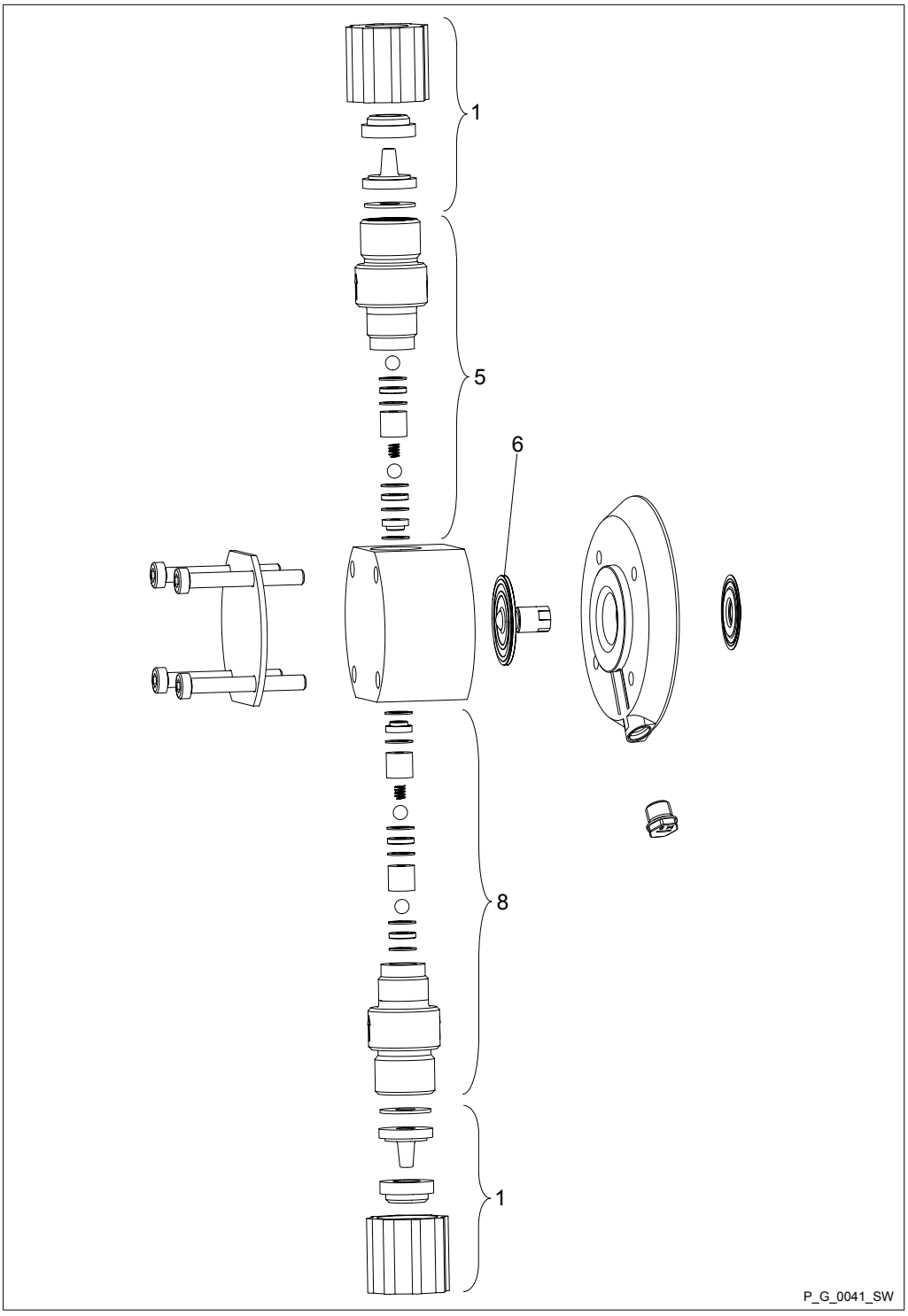

Fig. 49

Spare parts for liquid end gamma/ X 1602 - 1604 TTT

Item	Description
1	Connector kit
5	Discharge valve
6	Diaphragm
8	Suction valve

Liquid end gamma/ X 1602

	TTT
Liquid end	1051016
Spare parts kit	1001739
Diaphragm	1000246

Liquid end gamma/ X 1604

	TTT
Liquid end	1051017
Spare parts kit	1035331
Diaphragm	1034612

Liquid end gamma/ X 0708 (1009) - 0220 (0424) TTT

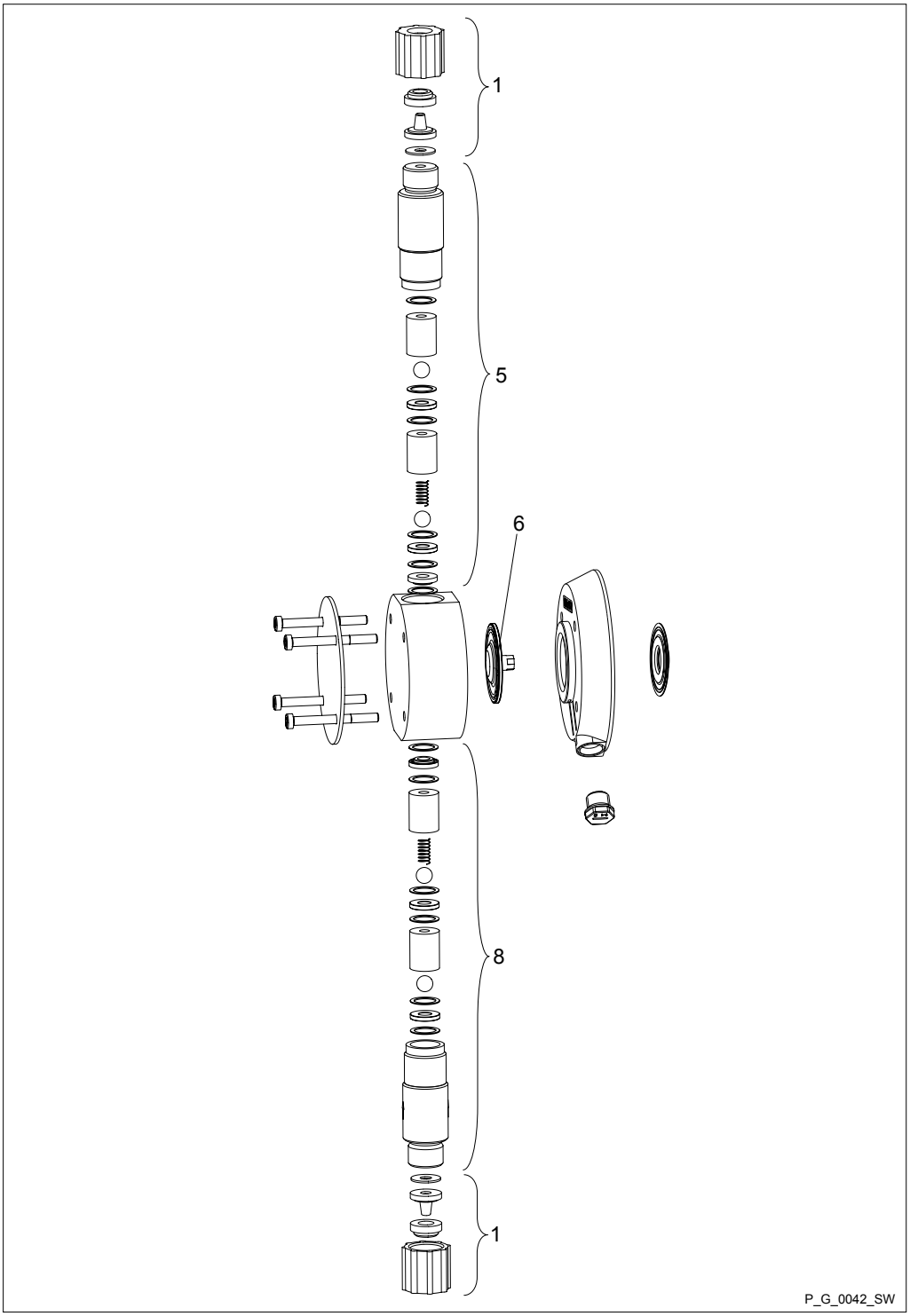

Fig. 50

Liquid end gamma/ X 0708 (1009) - 0220 (0424) TTT

Item	Description
1	Connector kit
5	Discharge valve
6	Diaphragm
8	Suction valve

Liquid end gamma/ X 0708 (1009)

	TTT
Liquid end	1051018
Spare parts kit	1001741
Diaphragm	1000248

Liquid end gamma/ X 0414 (0715)

	TTT
Liquid end	1051019
Spare parts kit	1001742
Diaphragm	1000249

Liquid end gamma/ X 0220 (0424)

	TTT
Liquid end	1051020
Spare parts kit	1051151
Diaphragm	1045456

Liquid end gamma/ X 0245 TTT

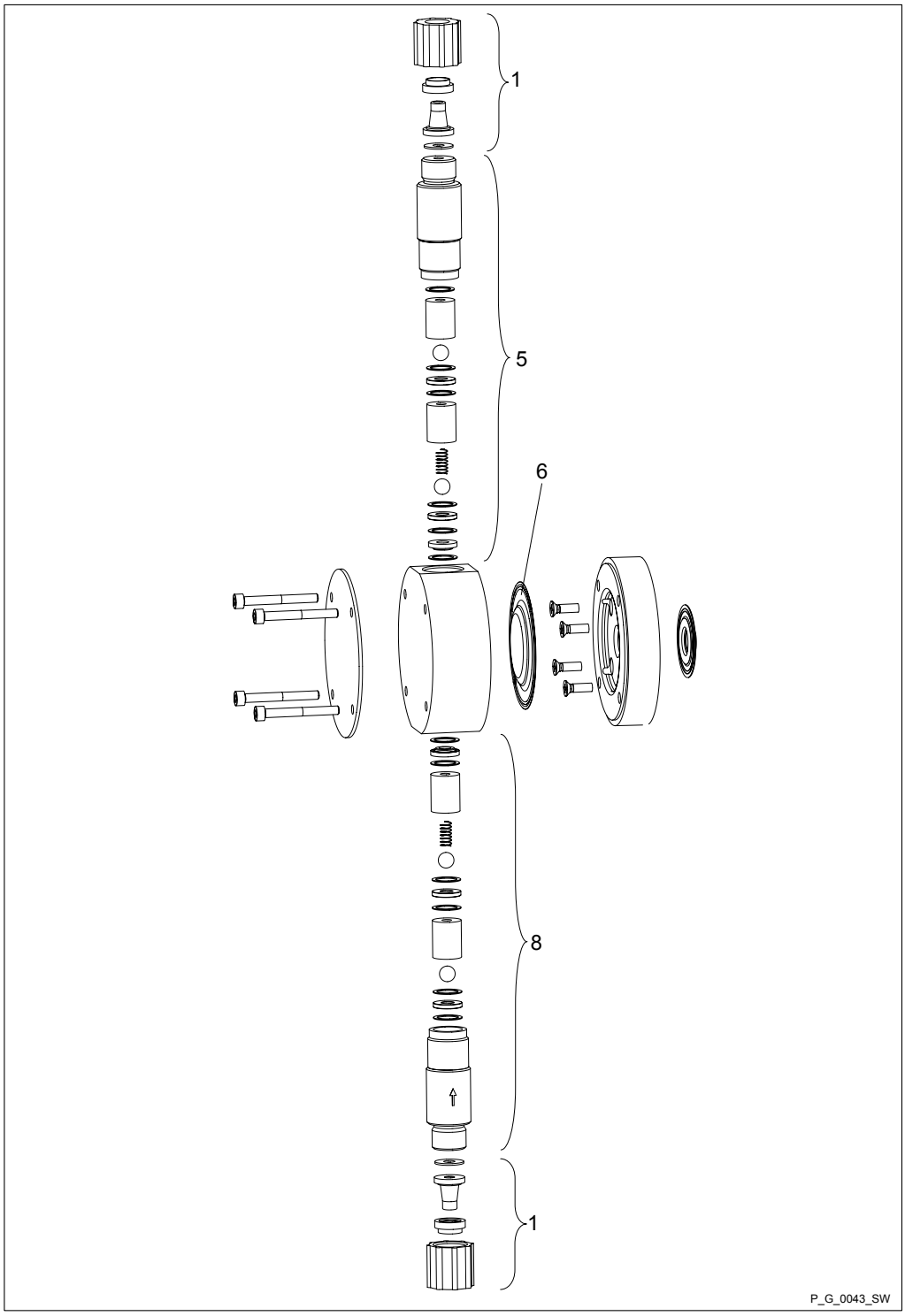

Fig. 51

Spare parts kit for liquid end gamma/ X 0245 TTT

Item	Description
1	Connector kit
5	Discharge valve
6	Diaphragm
8	Suction valve

Liquid end gamma/ X 0245

	TTT
Liquid end	1051021
Spare parts kit	1051152
Diaphragm	1045443

Liquid end gamma/ X 1602 - 2504 SST

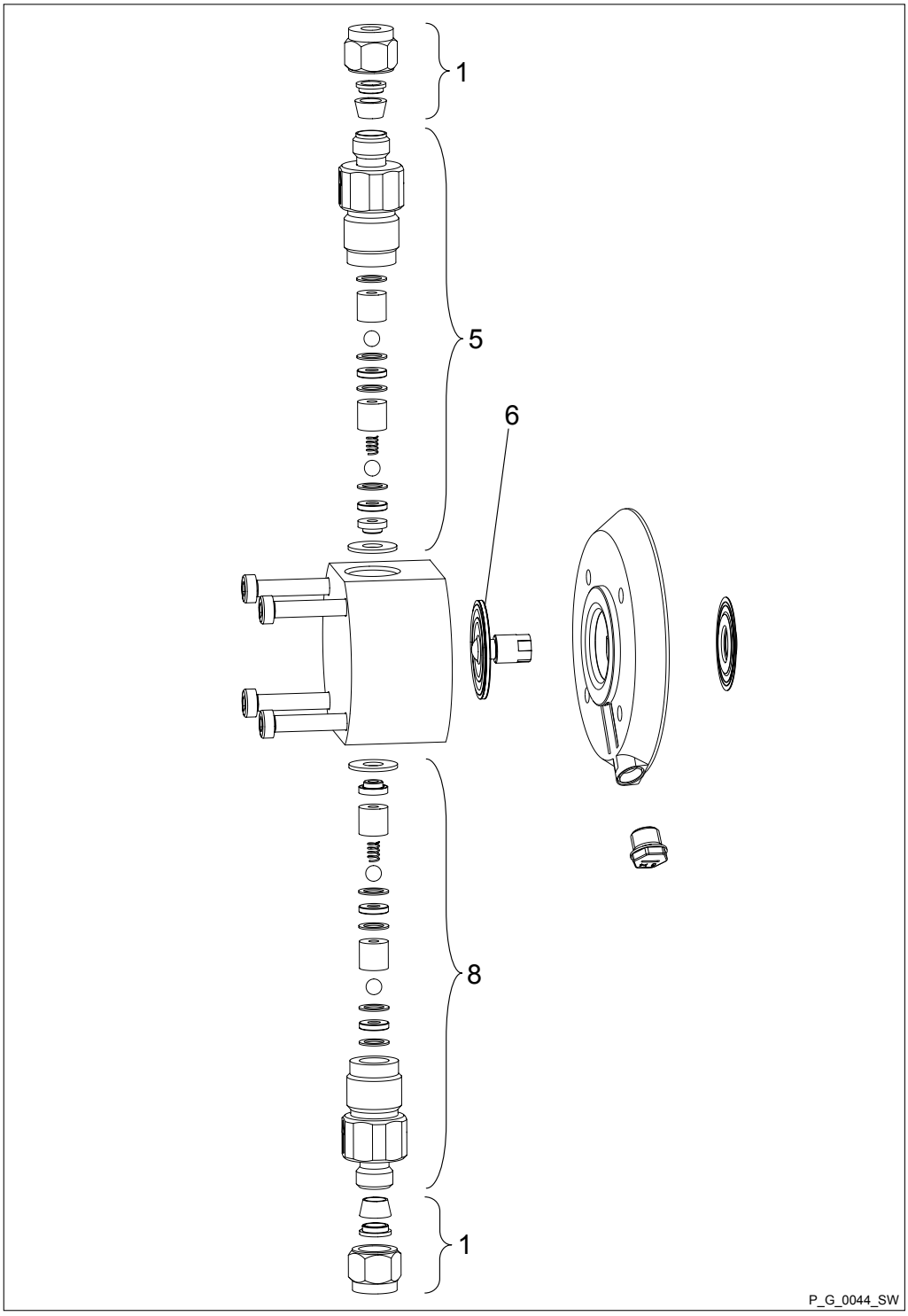

Fig. 52

Spare parts for liquid end gamma/ X 1602 - 2504 SST

Item	Description
1	Connector kit
5	Discharge valve
6	Diaphragm
8	Suction valve

Liquid end gamma/ X 1602 (2002)

	SST
Liquid end	1051004
Spare parts kit	1001731
Diaphragm	1000246

Liquid end gamma/ X 1604 (2504)

	SST
Liquid end	1051005
Spare parts kit	1035331
Diaphragm	1034612

Liquid end gamma/ X 0708 (1009) - 0220 (0424) SST

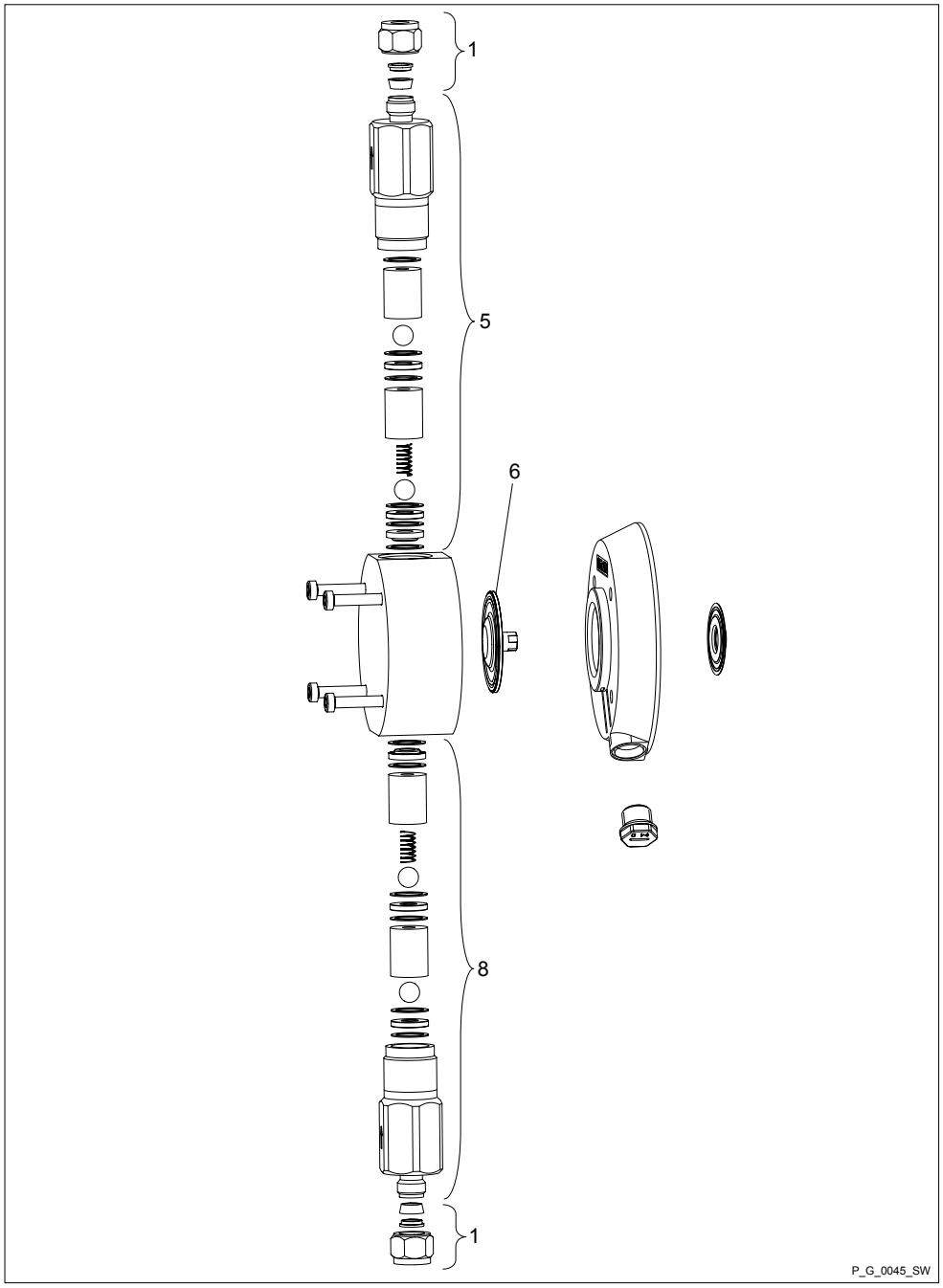

Fig. 53

Spare parts kit for liquid end gamma/ X 0708 (1009) - 0220 (0424) SST

Item	Description
1	Connector kit
5	Discharge valve
6	Diaphragm
8	Suction valve

Liquid end gamma/ X 0708 (1009)

	SST
Liquid end	1051006
Spare parts kit	1001733
Diaphragm	1000248

Liquid end gamma/ X 0414 (0715)

	SST
Liquid end	1051007
Spare parts kit	1001734
Diaphragm	1000249

Liquid end gamma/ X 0220 (0424)

	SST
Liquid end	1051008
Spare parts kit	1051139
Diaphragm	1045456

Liquid end gamma/ X 0245 SST

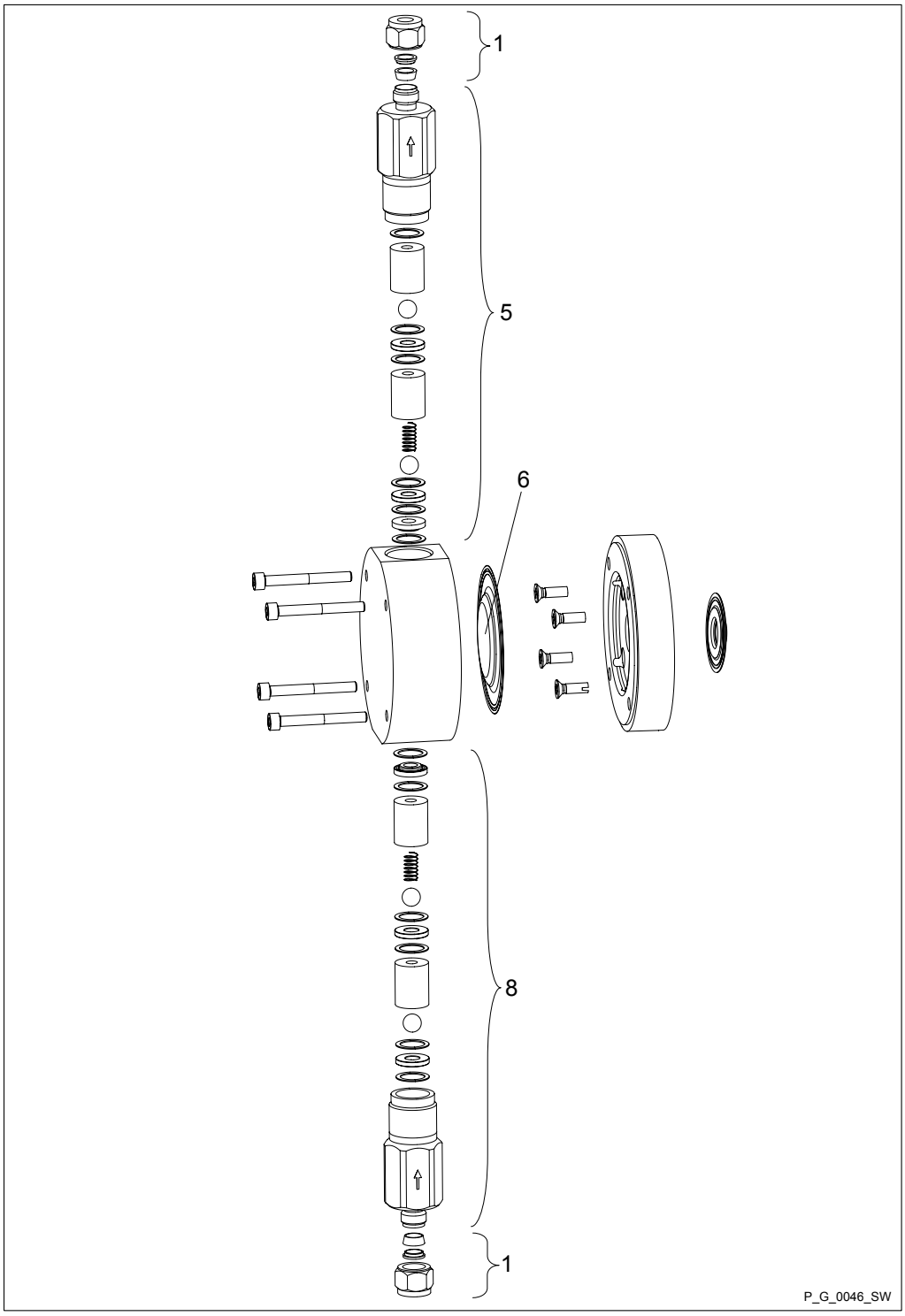

Fig. 54

Spare parts kit for liquid end gamma/ X 0245 SST

Item	Description
1	Connector kit
5	Discharge valve
6	Diaphragm
8	Suction valve

Liquid end gamma/ X 0245

	SST
Liquid end	1051009
Spare parts kit	1051140
Diaphragm	1045443

Liquid end gamma/ X 1602 - 1604 PP SEK and 1602 - 1604 NP SEK, self-bleeding

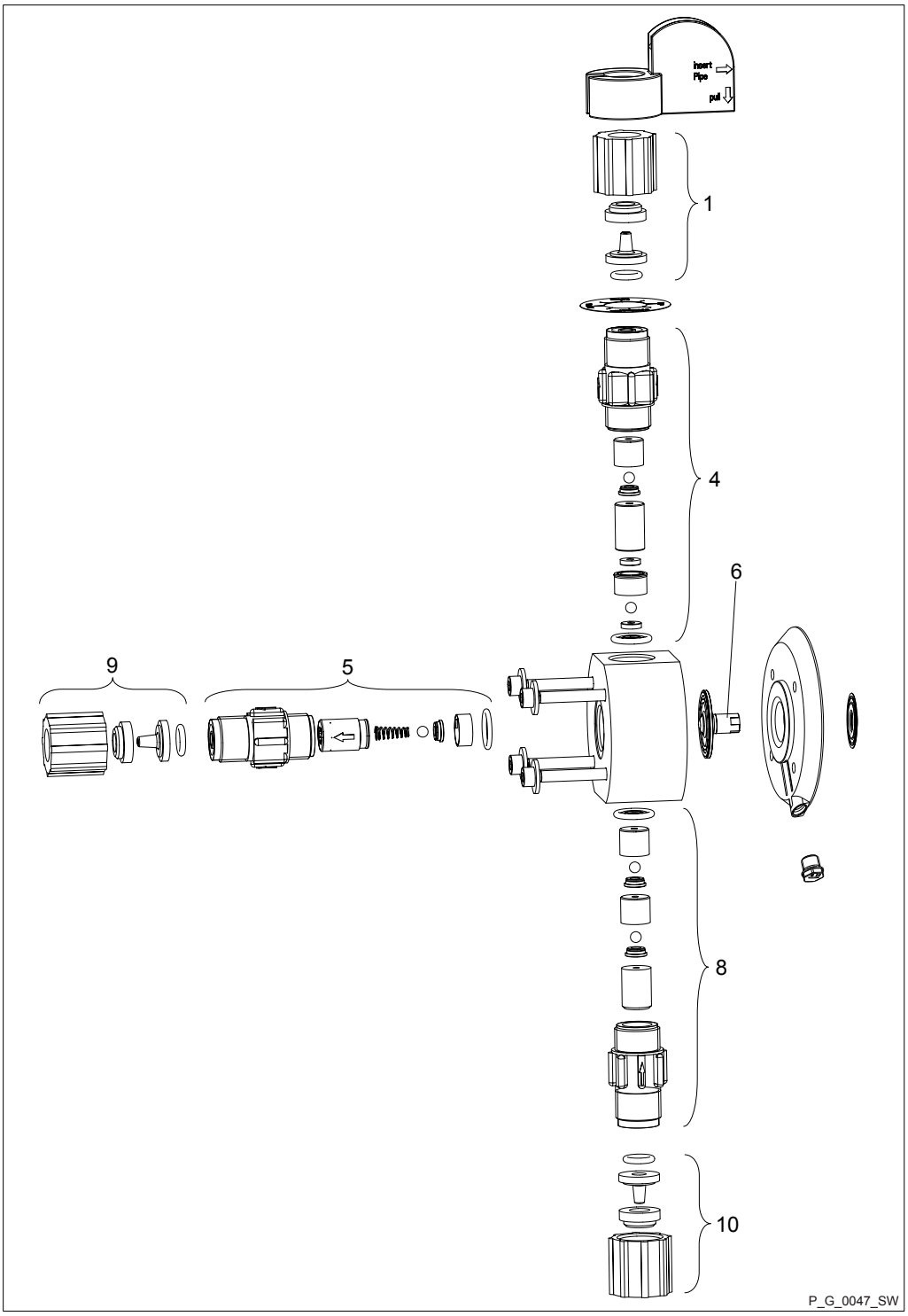

Fig. 55

Item	Part
1, 9, 10	Connector kit
4	Bleed valve
5	Discharge valve
6	Diaphragm
8	Suction valve

Liquid ends

Type	Order no:
PPE SEK	-
1602	1050937
1604	1050938
PPB SEK	-
1602	1050926
1604	1050927

Liquid ends

Type	Order no:
NPE SEK	-
1602	1050977
1604	1050978
NPB SEK	-
1602	1050960
1604	1050961

Spare parts kits for type:	Material version	Order no:
1602 with spring	PPE	1001757
1604 with spring	PPE	1035335
1602 with spring	PPB	1001763
1604 with spring	PPB	1035336
1602 with spring	NPE	1001661
1604 with spring	NPE	1035333
1602 with spring	NPB	1001667
1604 with spring	NPB	1035334

Diaphragm for type:	Order no:
1602	1000246
1604	1034612

Liquid end gamma/ X 0708 (1008) - 0220 (0420) PP / NP SEK, self-bleeding

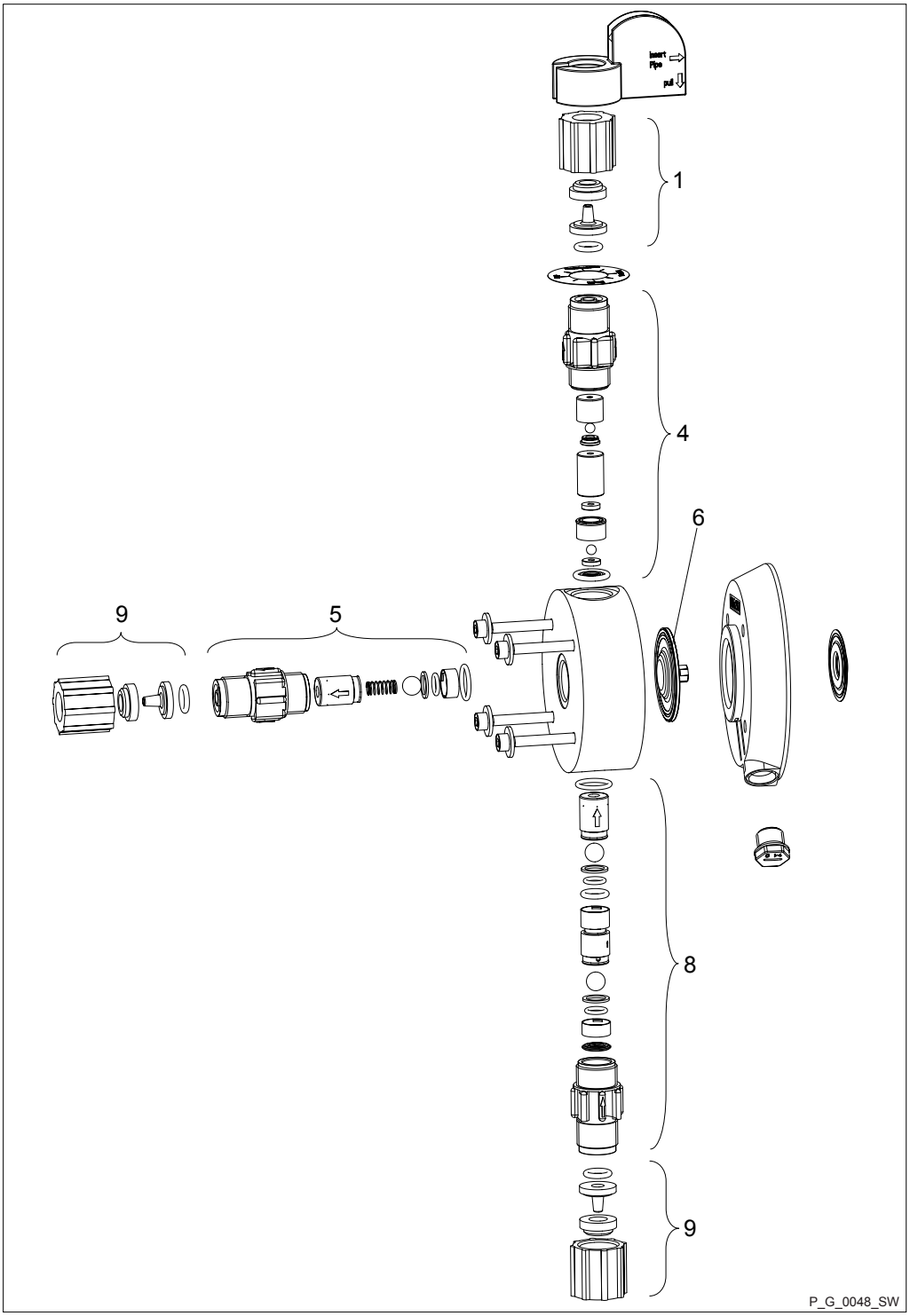

Fig. 56

Item	Part
1, 9, 10	Connector kit
4	Bleed valve
5	Discharge valve
6	Diaphragm
8	Suction valve

Liquid ends

Type	Order no:
PPE SEK	-
0708 / 1009	1050939
0414 / 0715	1050940
0220 / 0424	1050941
PPB SEK	-
0708 / 1009	1050928
0414 / 0715	1050929
0220 / 0424	1050930

Liquid ends

Type	Order no:
NPE SEK	-
0708 / 1009	1050979
0414 / 0715	1050980
0220 / 0424	1050981
NPB SEK	-
0708 / 1009	1050962
0414 / 0715	1050963
0220 / 0424	1050964

Spare parts kits for type:	Material version	Order no:
0708 (1008)	PPE	1001759
0413 (0713)	PPE	1001760
0220 (0420)	PPE	1051102
0708 (1008)	PPB	1001765
0413 (0713)	PPB	1001766
0220 (0420)	PPB	1051091
0708 (1008)	NPE	1001663
0413 (0713)	NPE	1001664
0220 (0420)	NPE	1051124
0708 (1008)	NPB	1001669
0413 (0713)	NPB	1001670
0220 (0420)	NPB	1051113

Diaphragm for type:	Order no:
0708	1000248
0413	1000249
0220	1045456

18.2 Ordering Information

Relay

Retrofit kit	Order no:
Fault indicating relay:	1050643
Fault indicating/pacing relay:	1050654

Further sources of information

Further information on spare parts, accessories and options can be found in:

- the exploded drawings
- the identity code
- under www.prominent.com
- the ProMinent product catalogue

19 Dimensional Drawings

- *Compare the dimensions on the dimensional drawing with those of the pump and mounting foot.*
- *All dimensions are in mm.*

Dimensional drawing of gamma/ X mounting foot

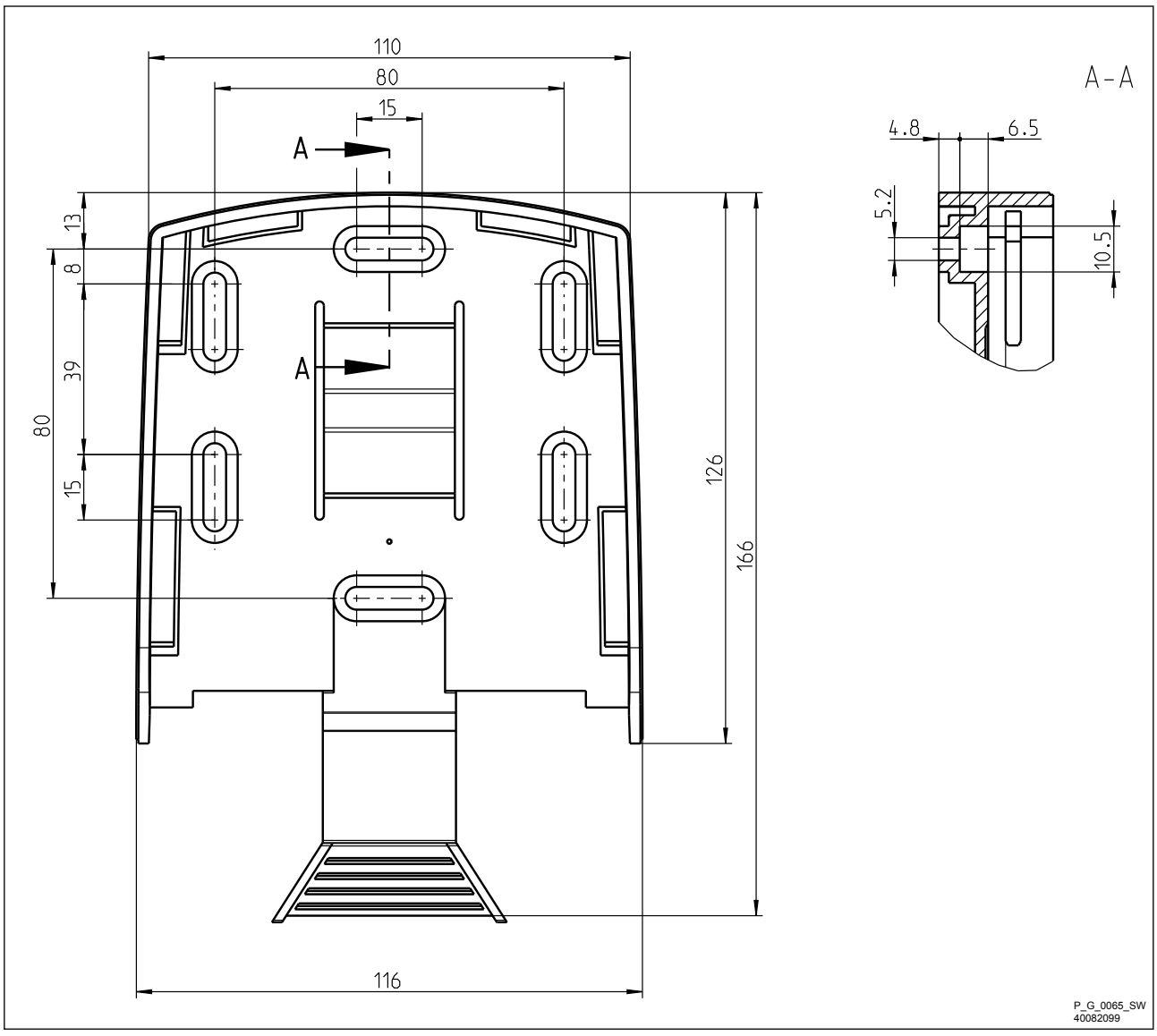

Fig. 57

Dimensional drawing of gamma/ X, material versions PPE, PPB and PPT

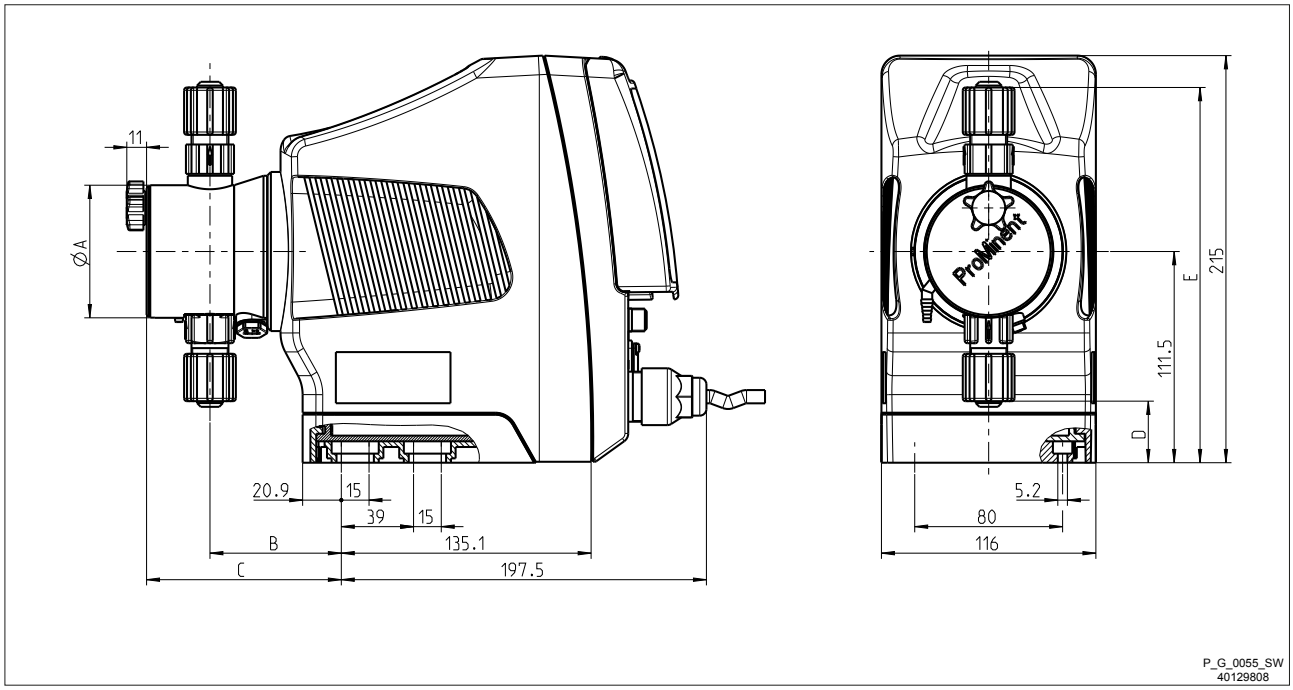

Fig. 58

	gamma/ X M70			gamma/ X M85		
	1602	**1009 - 0708**	**0424 - 220**	**1604**	**0715 - 0414**	**0245**
ØA	70	90	90	70	90	110
B	71	74	76	71	74	76
C (with bleed valve)	106	108	110	106	107	-
C (without bleed valve)	-	-	-	-	-	93
D	32	24	24	32	24	14
E	23	13	15	13	15	5
F	198	202	202	198	202	209

Dimensional drawing of gamma/ X, material versions NPE, NPB and NPT

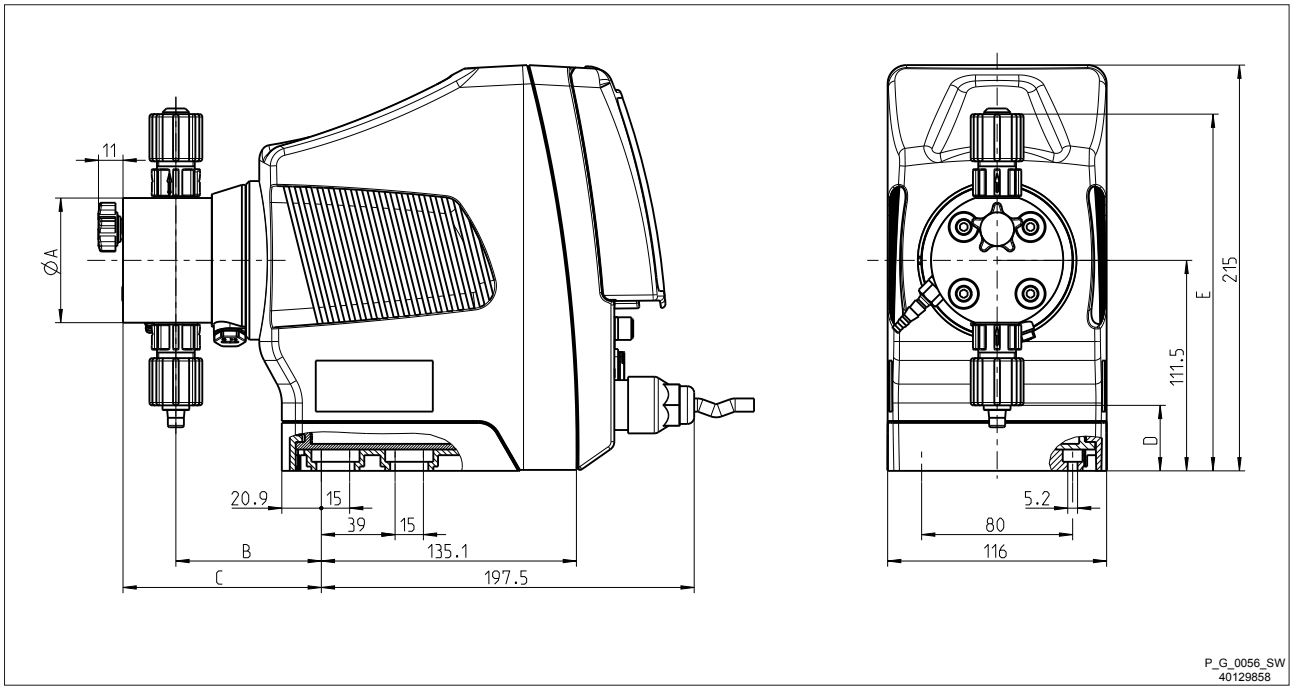

Fig. 59

	gamma/ X M70			gamma/ X M85		
	1602	**1009 - 0708**	**0424 - 220**	**1604**	**0715 - 0414**	**0245**
ØA	70	90	90	70	90	110
B	77	74	76	77	76	76
C (with bleed valve)	105	102	104	105	104	105
C (without bleed valve)	92	91	91	92	91	91
D	33	23	23	33	23	14
E	191	200	200	191	200	210

Dimensional drawing of gamma/ X, material version PVT

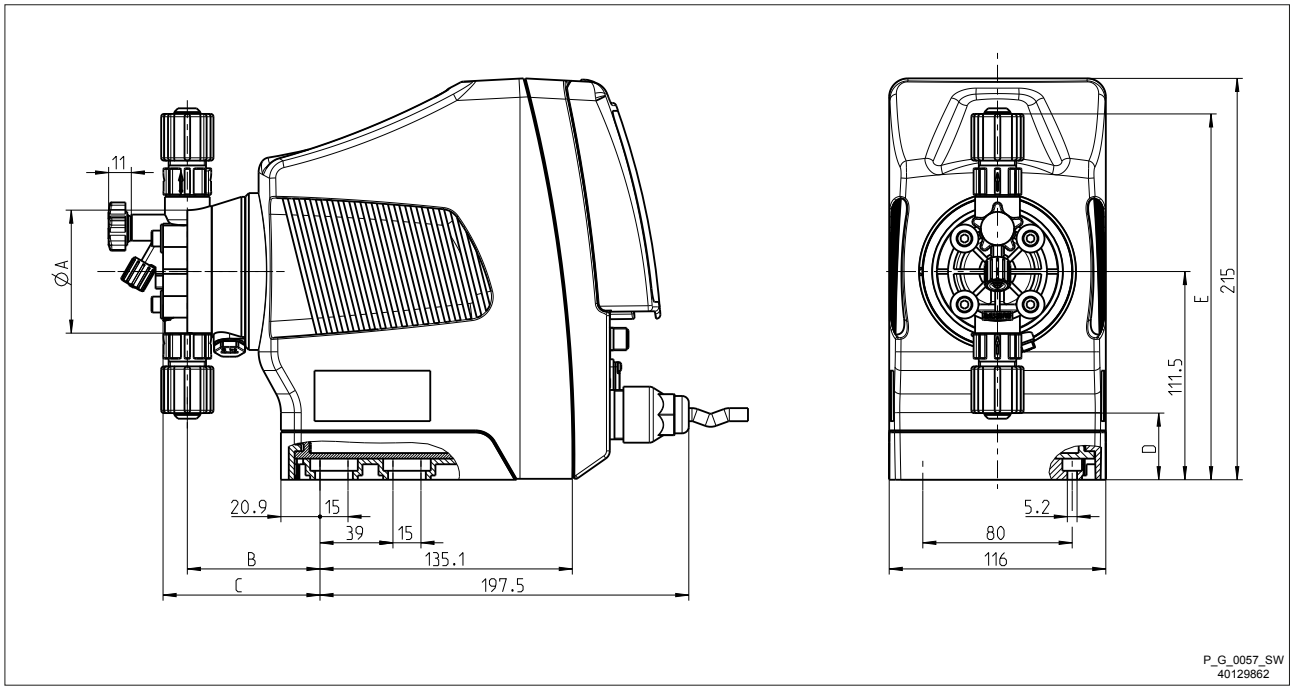

Fig. 60

	gamma/ X M70			gamma/ X M85		
	1602	**1009 - 0708**	**0424 - 220**	**1604**	**0715 - 0414**	**0245**
ØA	70	90	90	70	90	110
B	71	75	79	71	73	76
C (with bleed valve)	84	92	90	84	90	-
C (without bleed valve)	-	-	-	-	-	93
D	36	25	25	36	25	14
E	196	203	203	196	203	209

Dimensional drawing of gamma/ X, material version PVT HV

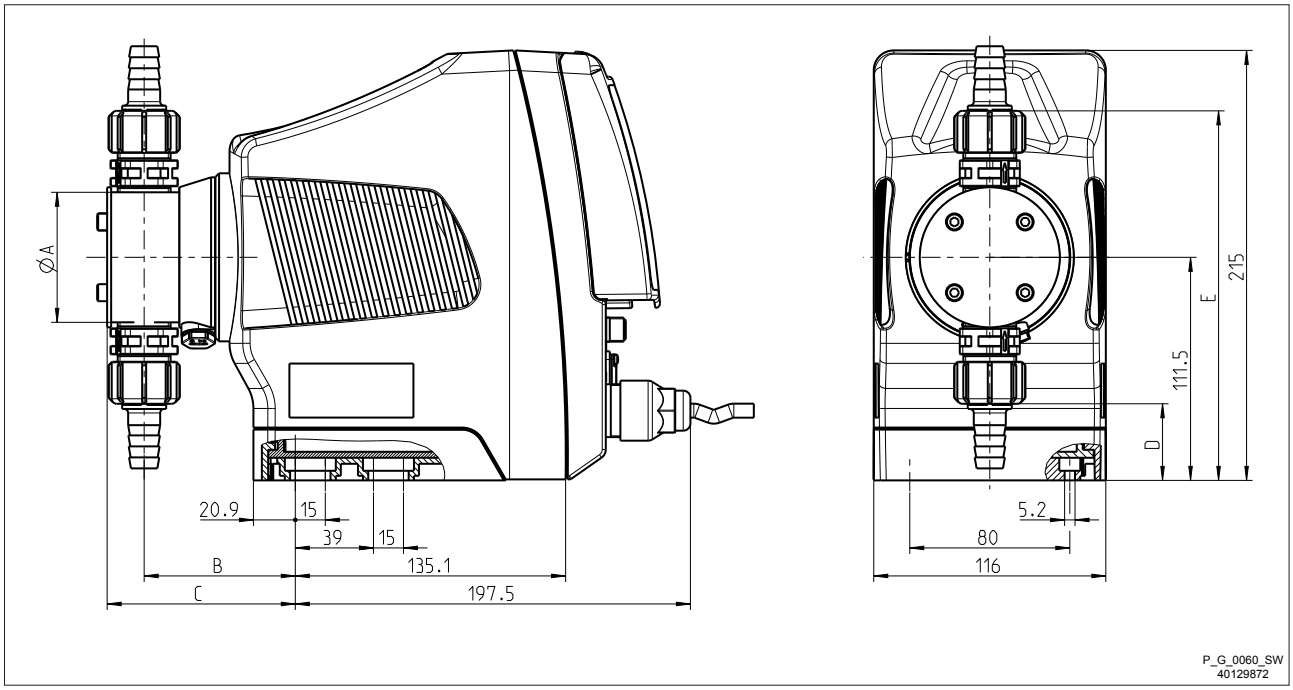

Fig. 61

	gamma/ X M70		gamma/ X M85	
	1009 - 0708	**0424 - 220**	**1604**	**0715 - 0414**
ØA	80	85	70	80
B	78	79	76	78
C	96	97	94	96
D	33	30	38	33
E	190	193	185	190

Dimensional drawing of gamma/ X, material version TTT

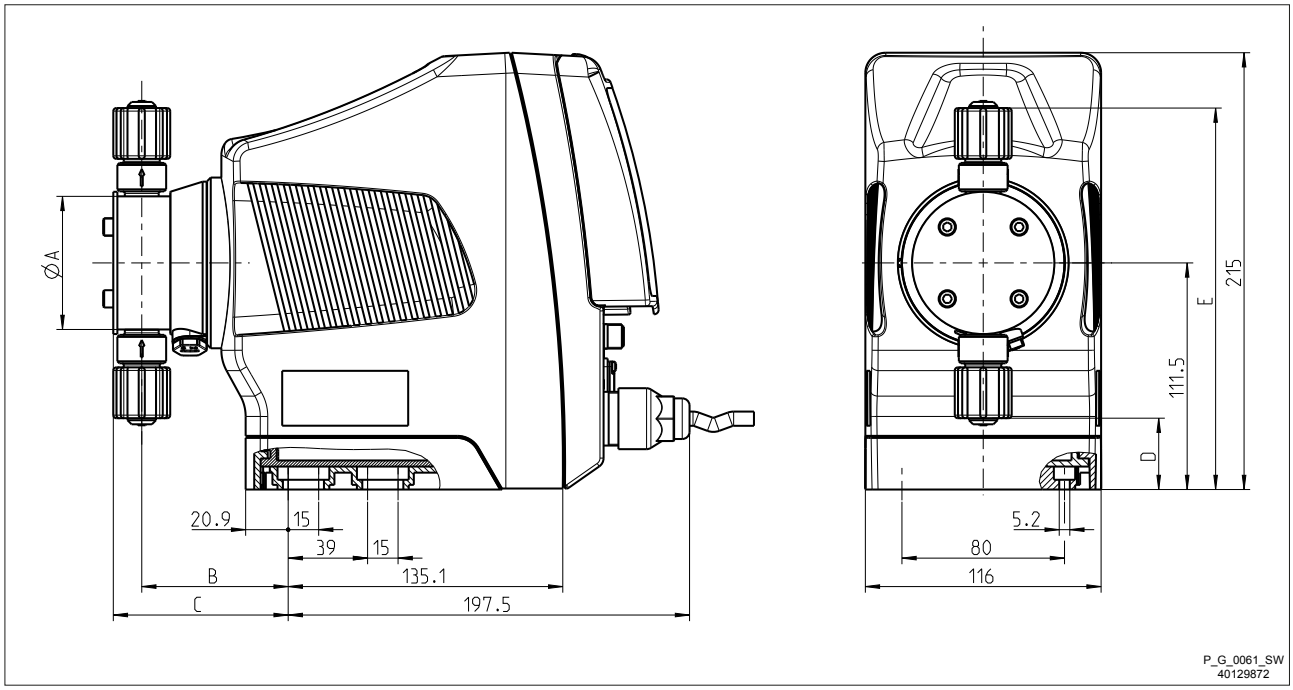

Fig. 62

	gamma/ X M70			gamma/ X M85		
	1602	1009 - 0708	0424 - 220	1604	0715 - 0414	0245
ØA	70	85	85	70	85	100
B	72	79	77	72	77	78
C	86	96	96	86	96	97
D	35	3	3	35	3	-5
E	188	220	202	188	220	227

Dimensional drawing of gamma/ X, material version SST

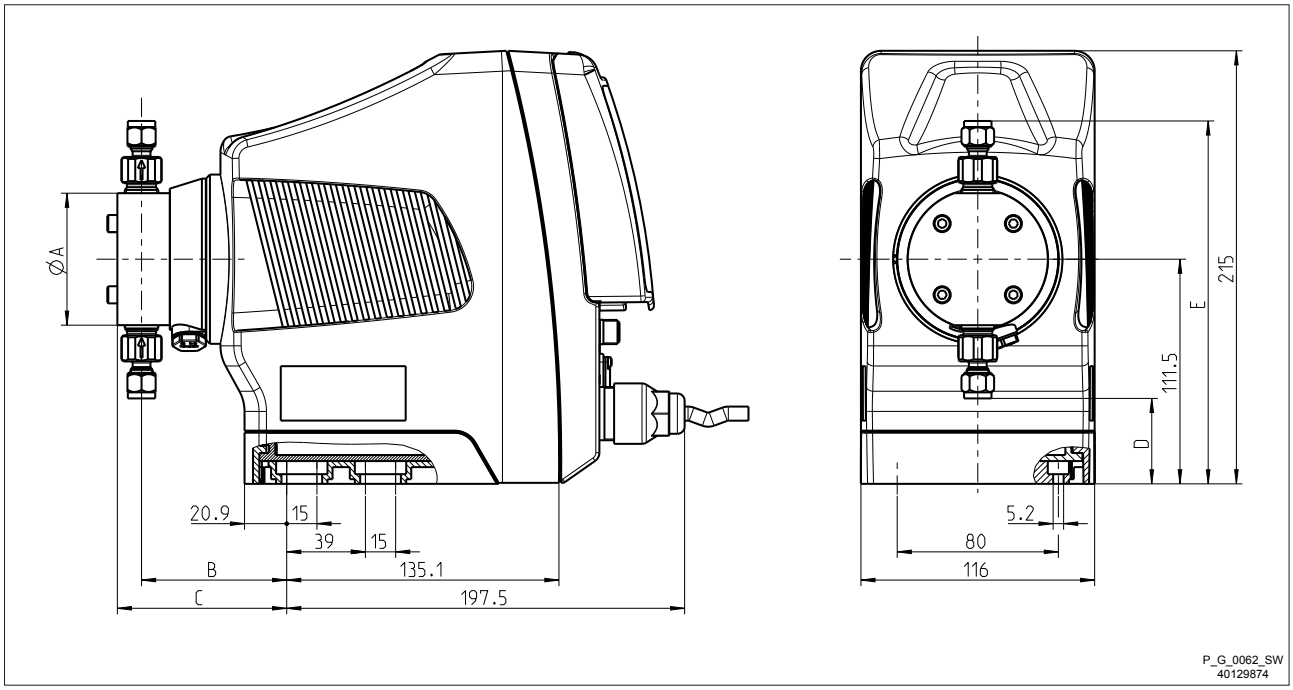

Fig. 63

	gamma/ X M70			gamma/ X M85		
	1602	1009 - 0708	0424 - 220	1604	0715 - 0414	0245
ØA	70	85	85	70	85	100
B	72	79	77	72	77	78
C	84	94	94	84	94	95
D	42	11	11	42	11	4
E	180	211	211	180	211	219

Dimensional drawing of gamma/ X, material version PPB SEK

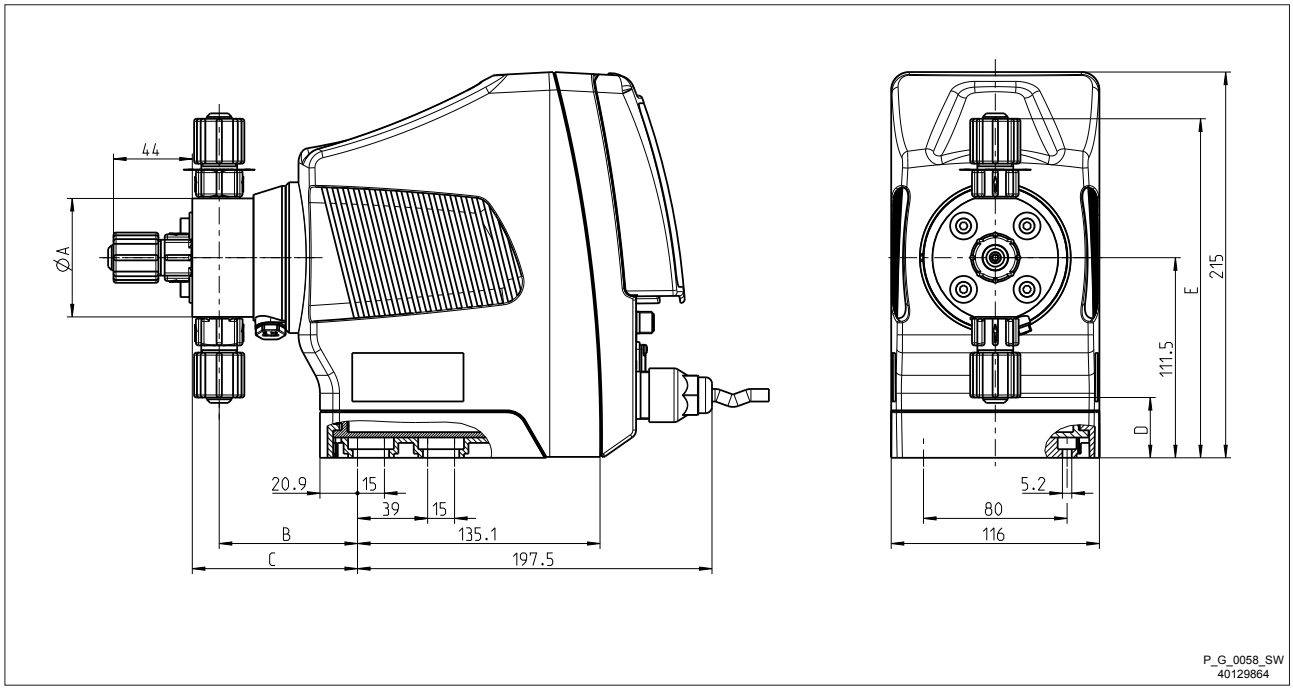

Fig. 64

	gamma/ X M70			gamma/ X M85	
	1602	1009 - 0708	0424 - 220	1604	0715 - 0414
ØA	70	90	90	70	90
B	77	74	76	77	76
C	92	89	91	92	91
D	33	24	24	33	24
E	189	199	199	189	199

Dimensional drawing of gamma/ X, material version NPB SEK

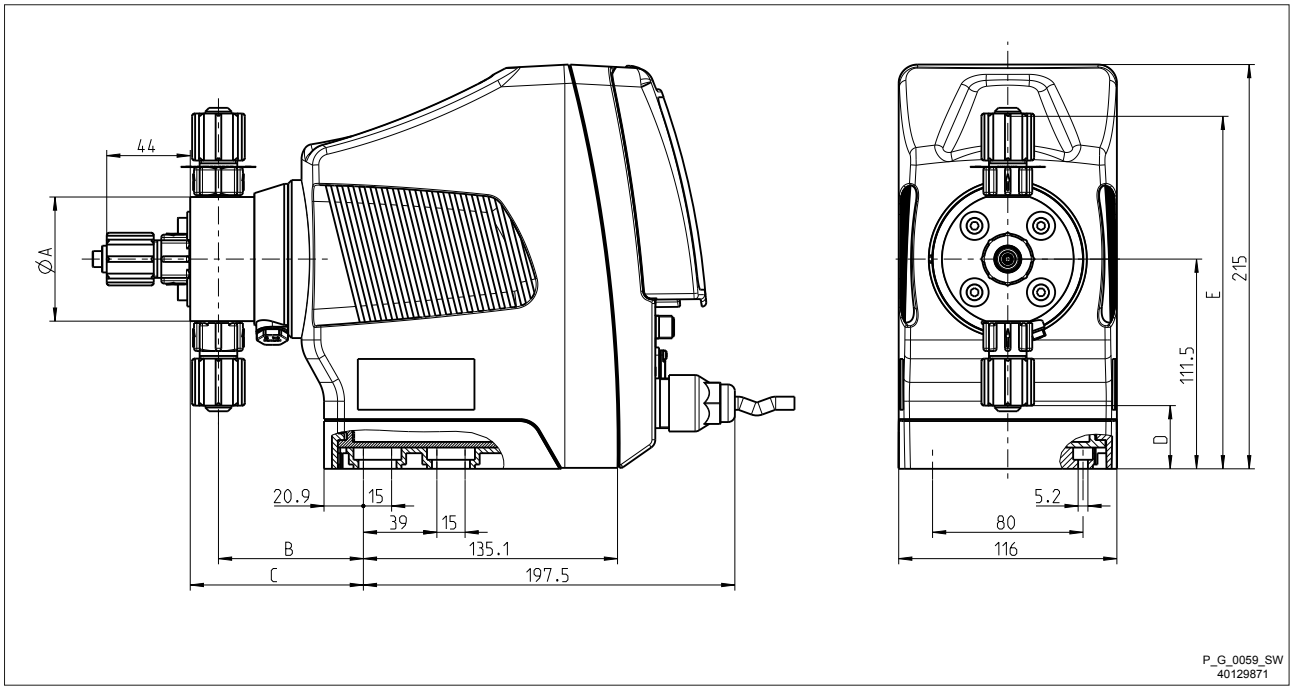

Fig. 65

	gamma/ X M70			gamma/ X M85	
	1602	**1009 - 0708**	**0424 - 220**	**1604**	**0715 - 0414**
ØA	70	90	90	70	90
B	77	76	76	77	76
C	92	91	91	92	91
D	33	24	24	33	24
E	189	199	199	189	199

20 Diagrams for Setting the Capacity

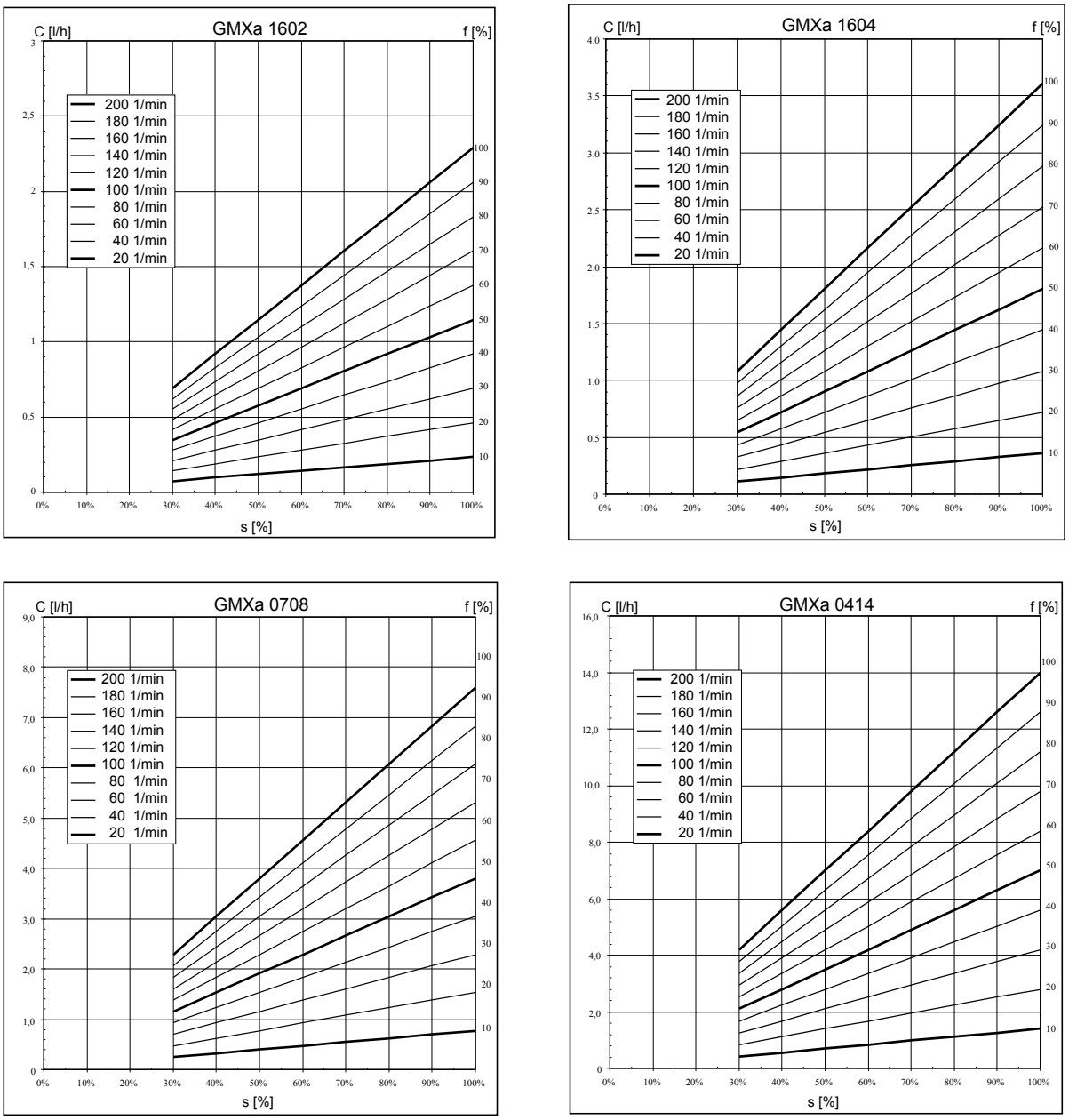

Fig. 66: Capacity C at medium back pressure depending on the stroke length s for different stroke rates f

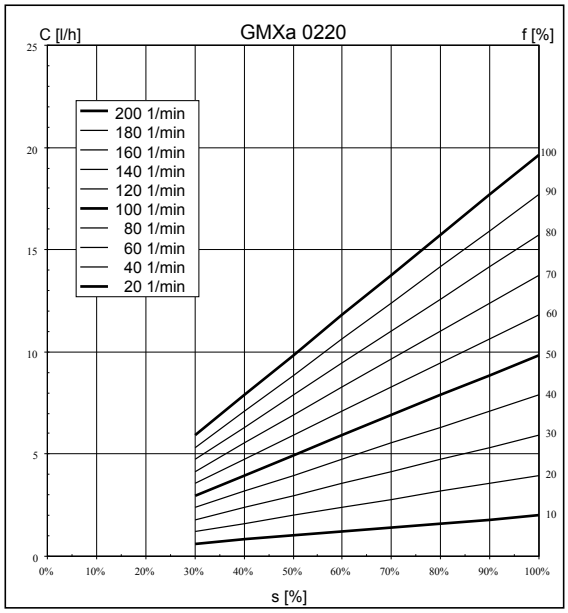

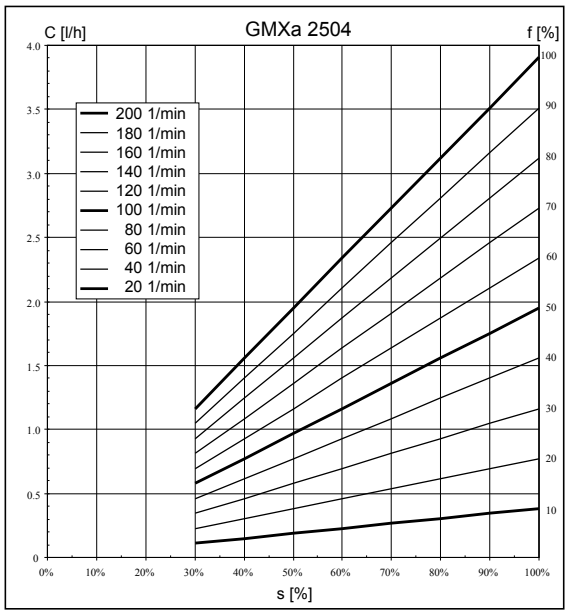

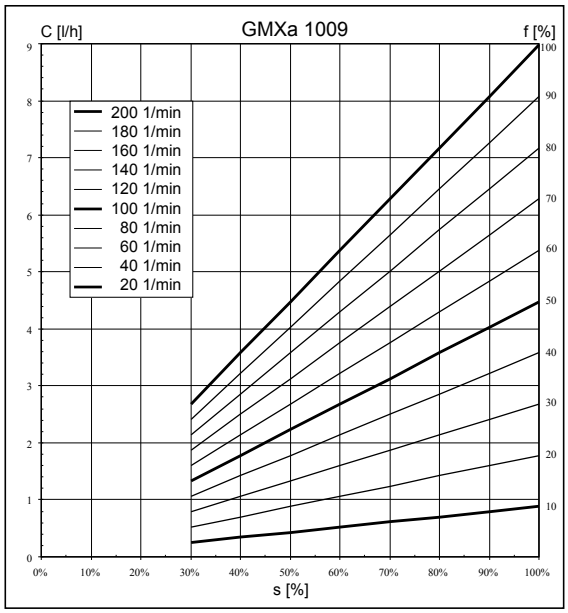

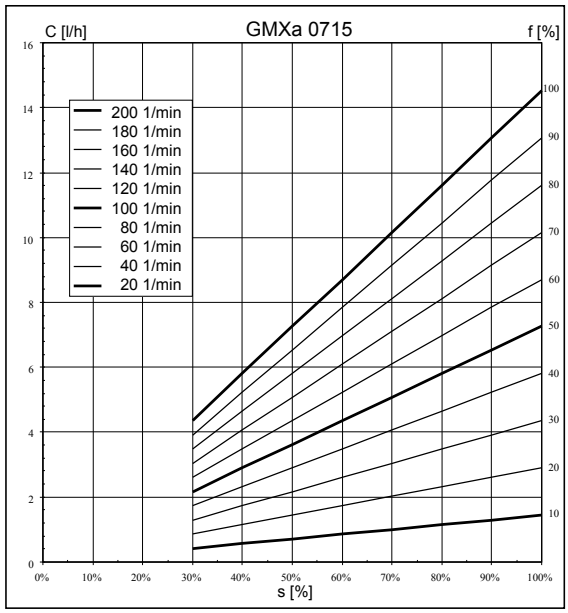

Fig. 67: Capacity C at medium back pressure depending on the stroke length s for different stroke rates f

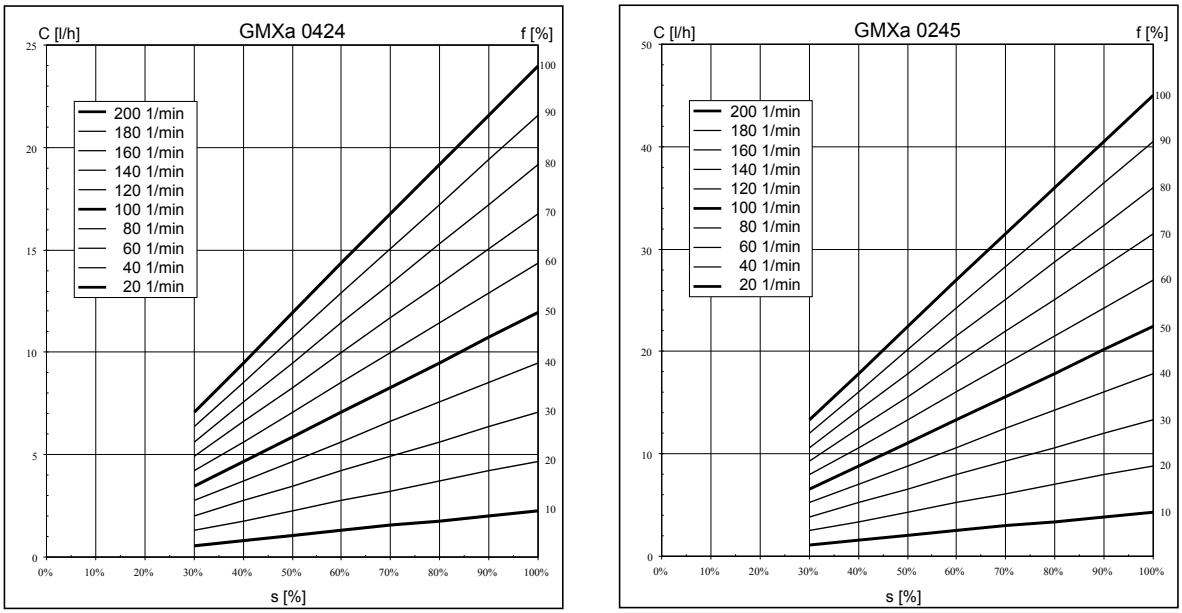

Fig. 68: Capacity C at medium back pressure depending on the stroke length s for different stroke rates f

21 EC Declaration of Conformity for Machinery

For mains voltage pumps:

In accordance with DIRECTIVE 2006/42/EC OF THE EUROPEAN PARLIAMENT AND OF THE COUNCIL, Appendix I, BASIC HEALTH AND SAFETY REQUIREMENTS, section 1.7.4.2. C.

We,

- ProMinent GmbH
- Im Schuhmachergewann 5 - 11
- D - 69123 Heidelberg,

hereby declare that the product specified in the following, complies with the relevant basic health and safety requirements of the EC Directive, on the basis of its functional concept and design and in the version distributed by us.

Any modification to the product not approved by us will invalidate this declaration.

Extract from the EC Declaration of Conformity

Designation of the product:	Metering pump, Gamma/ X product range
Product type:	GMXa _ _ _ _ _ _ _ _ _ _ _ _ U _ _ Y _ 0 Y = 0, 3, 4, 5
Serial number:	see nameplate on the unit
Relevant EC directives:	Machinery Directive (2006/42/EC) EMC Directive (2004/108/EC) Compliance with the protection targets of the Low Voltage Directive (2006/95/EC) as per Appendix I, No. 1.5.1 of the Machinery Directive (2006/42/EC) RoHS Directive (2011/65/EU)
Harmonised standards applied, in particular:	EN 809: 2010 EN ISO 12100: 2010 EN 61010-1: 2010 EN 61000-6-2: 2005 EN 61000-6-3: 2011 EN 50581: 2012
Date:	16.03.2015

The EC Declaration of Conformity is available to download on our homepage.

22 Operating/Set-up Overview of the gamma/ X

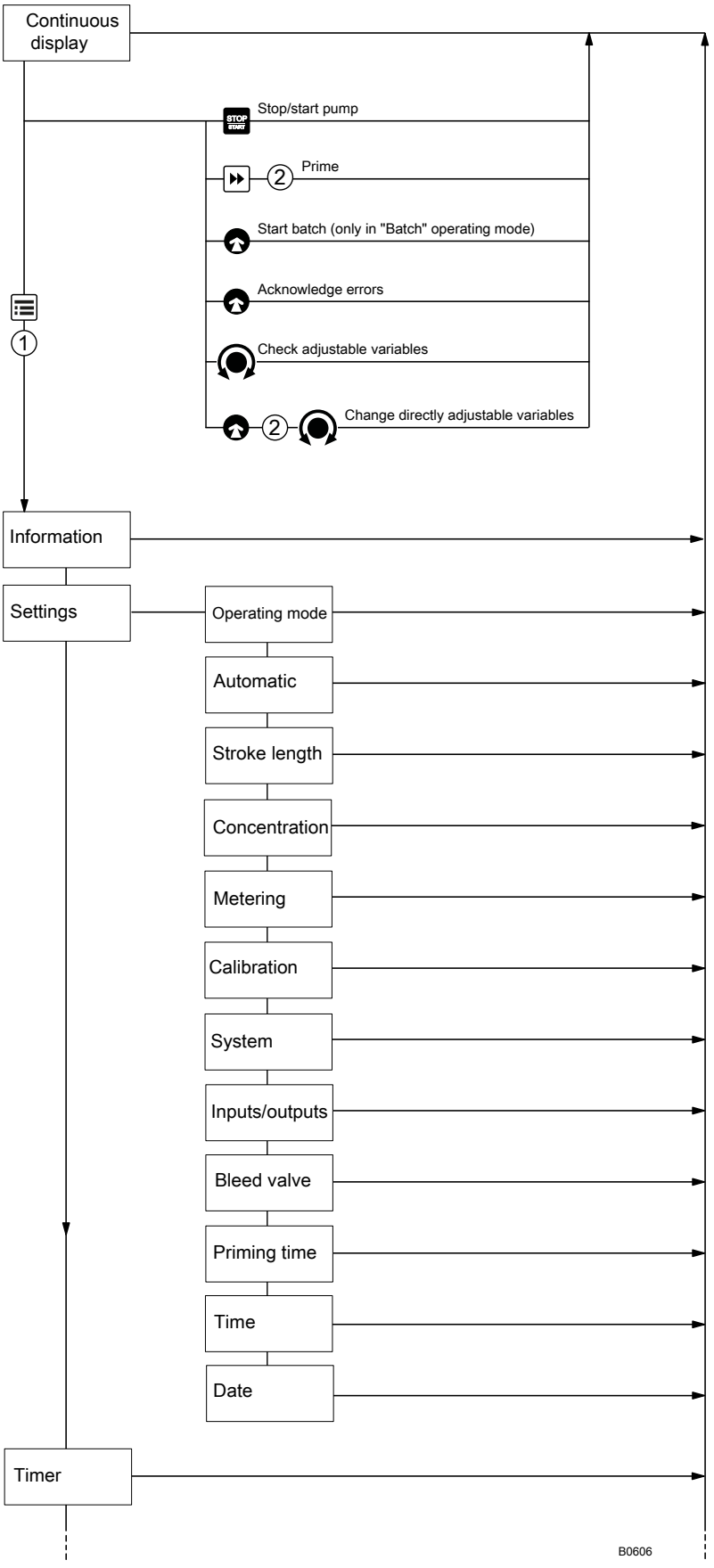

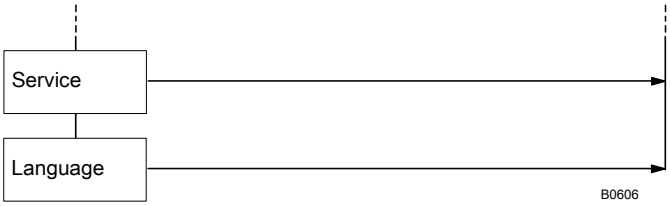
Service
Language
B0606

23 Operating Menu of gamma/ X, Entire Unit

1st level	2nd	3rd	4th	5th	xth
Information	Versions	Hardware			
		Software			
		HMI version			
	Time				
	Date				
	Serial number				
	Identity code				
	Max. capacity *1 Max. capacity *2				
	Switch-on counter				
	Total operating time				
	Total metering volume				
	Total number of strokes				
	Current stroke volume				
Settings	Operating mode	Manual			
		Contact	*Memory* On Off	Metering volume *1	
				Factor *2	
		Batch	*Memory* On Off	Metering volume *1	
				Factor *2	...
		Analogue	0..20 mA		
			4..20 mA		
			Linear curve Lower side band Upper side band	Curve point 1 (I1,F1) Error mess. < Imin Error mess. > Imax	...
	Automatic	On Off			
	Stroke length *2	1 … 100%			
	Concentration	Concentration control active inactive	Flow of main medium (for Manual)	Concentration of feed chemical	...
			Contact gap (for Contact)	Concentration of feed chemical	...
			Volume of main medium (for Batch)	Concentration of feed chemical	...

1st level	2nd	3rd	4th	5th	xth
			Max. flow of main medium (for Analogue)	Concentration of feed chemical	...
	Metering	Discharge stroke	optimum fast sine mode continuous DFMa		
		Suction stroke	normal HV1 HV2 HV3		
		Pressure stage	x bar		
		Monitoring	Air lock	Inactive Warning Error	
			Message with overpressure	Warning Error	
		Compensation	active inactive		
	Calibration	Start calibration	Calibration ended	Calibration result	
	System	Dosing head	No dosing head ... 0245		
		Volume unit	Litres Gallons		
		Pressure unit	bar psi		
	Inputs/outputs	Auxiliary capacity *1 Auxiliary frequency *2	...		
		Relay 1	Relay1 type	Inactive Error Warning Warning + error Pump active Metering / Batch Bleed valve	
			Relay 1 polarity	normally-open (NO) normally-closed (NC)	
			Relay cycle quantity	01.000 l	

1st level	2nd	3rd	4th	5th	xth
		Relay 2	Relay type	Inactive Error Warning Warning + error Pump active Metering volume Stroke rate Metering / Batch Bleed valve External	
			Polarity	normally-open (NO) normally-closed (NC)	
		Analogue output	0..20 mA 4..20 mA	Strokes / hour Capacity at 20 mA	
		Flow control	Flow Control	Tolerance / strokes	...
				Activation	...
				if auxiliary	...
		Diaphragm rupture	Inactive Warning Error		
		Pause Input	normally-open (NO) normally-closed (NC)		
		Level warning	normally-open (NO) normally-closed (NC)		
		Level error	normally-open (NO) normally-closed (NC)		
	Bleed valve	Off			
		Periodic	Bleed cycle	Bleed metering time	...
		Air lock	Bleed metering time		
		both	Bleed cycle	Bleed metering time	...
	Priming time	0 … 60 s			
	Set time	Time	Set	hh.mm.ss	
		Auto. summer time			
		Summer time begins in	February March April		
		Sunday the	1st, 2nd, 3rd, 4th, 5th		

1st level	2nd	3rd	4th	5th	xth
		Summer time ends in	August September October November		
		Sunday the	1st, 2nd, 3rd, 4th, 5th		
	Date	Set	dd.mm.yyyy		
Timer	Activation	Active Inactive			
	Setting the timer	New Display Change Clear	Command 01 Command2 …	Init Hourly Daily (Mon-Sun) Weekdays1 (Mo-Fr) Weekdays2 (Mo-Sa) Weekend (Sa+Su) Weekly Monthly	...
	Clear all	No Yes			
Service	Access protect.	*Password?*	None Lock menu Lock all		
	Change password	*Password?*	0000		
	Clear counter	Stroke counter Volume counter All			
	Diaphragm replace-ment	Back To change position			
	Display	Brightness			
		Contrast			
	Factory settings	*Password?*	Yes No		
Language	English German Frenchç Spanishñ				

*1 with *'Automatic'* - *'on'* - see Chap. *'Set Up'* - *'Settings'* - *'Automatic'*

*2 with *'Automatic'* - *'off'* / with conventional operating mode

Menus may be missing or added depending on the design and equipment on the pump.

24 Continuous Displays and Secondary Displays

Continuous displays

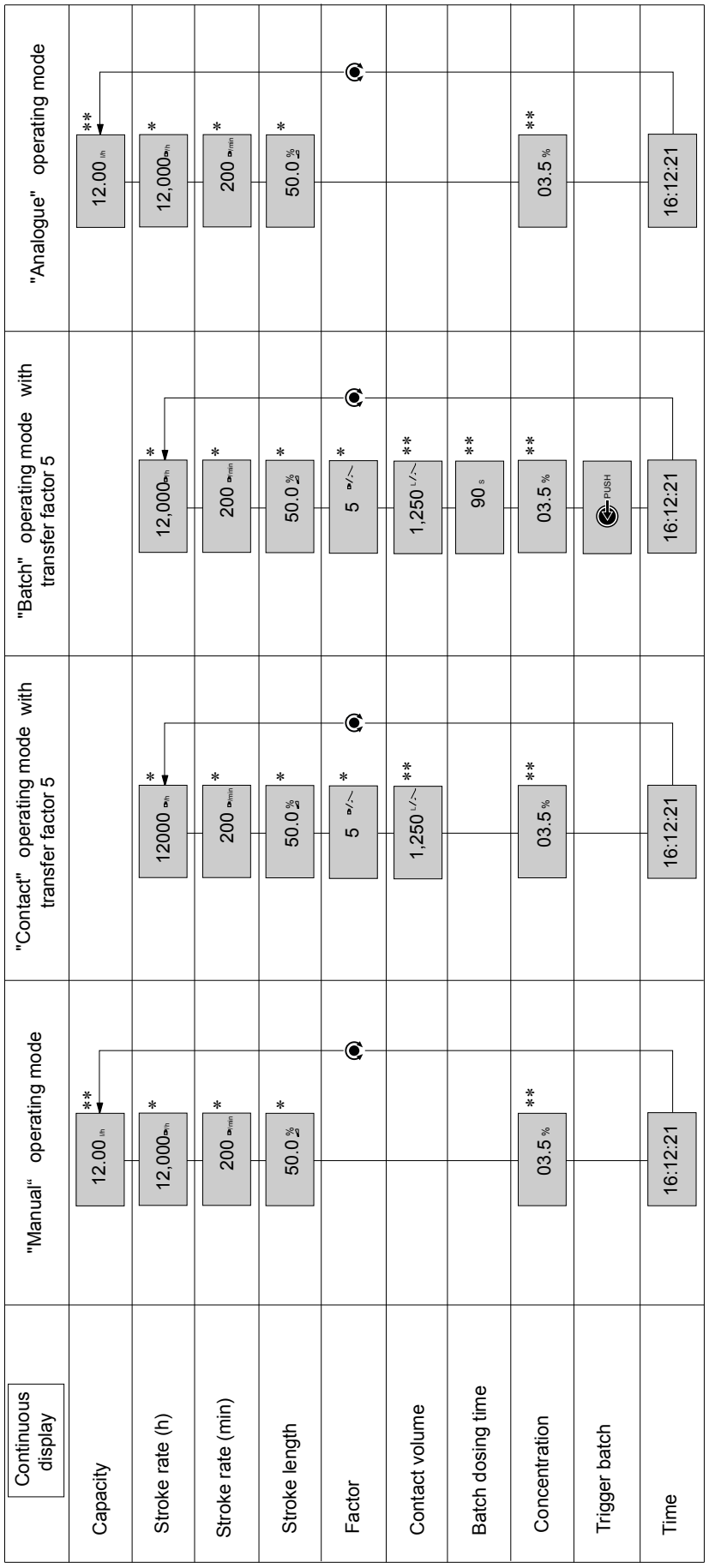

Auxiliary displays in the continuous display

Auxiliary display	Mode **"Manual"**	Mode **"Batch"** with transfer factor 5	Mode **"Contact"** with transfer factor 5	Mode **"Analogue"**
Capacity	12.00 L / h			12.00 L / h
Stroke rate	12000 / h	12000 / h	12000 / h	12000 / h
Factor		5 /	5 /	
Remaining strokes			25,00 [1]	
Remaining litres			000,833 L [1]	
Total number of strokes	86500	86500	86500	86500
Stroke length	50 %	50 %	50 %	50 %
Signal current (at the input)				12,7 mA [2]
Dosing mode	slow HV1	slow HV1	slow HV1	slow HV1
Pressure display	12.5 bar	12.5 bar	12.5 bar	12.5 bar
Time	16:12:21	16:12:21	16:12:21	16:12:21
Date	2015 - 03 - 27	2015 - 03 - 27	2015 - 03 - 27	2015 - 03 - 27

1 = only with "Storage tank" function extension
2 = only with current output

25 Index

1, 2, 3 ...

"External control" terminal . . . 34
4 - 20 mA . . . 47

A

About this pump . . . 7
Access code . . . 71
Access protect. . . . 43, 70
Accuracy . . . 88
Acknowledgement . . . 73
Action . . . 69
Administration functions for commands . . . 68
Air humidity . . . 90
Air lock . . . 53
Analogue . . . 21, 35
Analogue input . . . 34, 47
Analogue output . . . 64
Anti-kink device . . . 31
Applied harmonised standards . . . 137
Assembly . . . 24
Automatic . . . 49
Automatic bleeding . . . 23
AUX . . . 63
Auxiliary capacity . . . 22, 23, 34, 35, 63
Auxiliary frequency . . . 22, 23, 34, 35, 63

B

Back pressure fluctuations . . . 53
Basic Principles for Setting up the Control . . . 41
Batch . . . 21, 47, 55, 57, 58, 64
Bleed . . . 30, 64, 66
Bleed valve . . . 31
Bleed, function . . . 22
Brightness . . . 72

C

Calibrate . . . 22, 60
Capacity . . . 134
Cavitation . . . 51
Change . . . 68
Check adjustable variables . . . 73
Checking adjustable variables . . . 43
Cleaning the diaphragm rupture sensor . . . 80
Cleaning valves . . . 78
Clear . . . 68, 71
Clear all . . . 70
Clear counter . . . 71
Clear, all . . . 70
Clearing the program . . . 70
Clickwheel . . . 15
Climate . . . 90
Code . . . 71
Compatibility . . . 90
Compensation . . . 53
Concentration . . . 54
Concentration entry . . . 54
Connector size . . . 87
Contact . . . 21, 45
Contact memory . . . 71
Contact water meter . . . 46
Continuous display . . . 16
Continuous displays . . . 43, 144
Contrast . . . 72
Control Elements . . . 15
Creating a program . . . 68
Current output . . . 39
Curve . . . 47

D

Date . . . 44, 67
Declaration of Conformity . . . 137
Decommissioning . . . 85
Decontamination declaration . . . 13
Degree of protection . . . 90
Demonstration purposes . . . 62
Designation of the product . . . 137
DFMa . . . 50
Diagrams for Setting the Capacity . . . 134
Diaphragm replacement . . . 72, 79
Diaphragm replacement position . . . 72
Diaphragm rupture . . . 65
Diaphragm rupture indicator . . . 36
Dimensional Drawings . . . 125
Directly changeable variables . . . 73
Discharge stroke . . . 19, 50
Discharge valve . . . 31
Display . . . 68, 72
Disposal . . . 86
Dosing monitor . . . 36
Dosing precision . . . 53
Draining the liquid end . . . 85
DulcoFlow . . . 50

E

EC Declaration of Conformity . . . 137
Electrical data . . . 89
Emergency . . . 11
Error . . . 23, 64
Error processing . . . 48
Example . . . 70
Exploded drawings . . . 92
External contact . . . 23, 34, 35
External frequency changer . . . 23

F

Factor . . . 45, 47
Factory settings . . . 72
Fast . . . 50
Fault indicating and pacing relay option . . . 22
Fault indicating relay . . . 22, 37, 38, 39
Fault indicator . . . 15
Fault indicator (red) . . . 23
Fault message . . . 16
Fault messages . . . 83
Fault statuses . . . 23
Faults without a fault message . . . 82
Fill . . . 50
Flow . . . 22
Flow control . . . 65
Functional Description . . . 19
Functions . . . 22, 23

G

Gas lock . . . 53
Gaseous feed chemicals . . . 51
Generating instructions . . . 68

H

Hardware . . . 44
Hierarchy of operating modes . . . 23
HV1 . . . 51

I

Identification of safety notes . . . 8
Identifier . . . 16
Identity code . . . 5, 44

Info 44
Information in the event of an emergency 11
Init 68
Inputs/outputs 62
Installation, electrical 33
Installation, hydraulic 26
Installing hose lines 27
Intended Use 8
IP 90

K
Keys 15, 18

L
Language 72
LCD screen 15
Leakage hole 75
Level 65
Level switch 22, 35, 37
Linear curve 48
Lock 70
Lost in hyperspace 41
Lower side band 48

M
mA Input 34, 47
mA output 23, 64
Main display 16
Mains cable 34
Maintenance 75
Manual 21, 23, 45, 54
Material specifications 89
Maximum capacity 44
Maximum metering rate 44
Memory 45, 47
Menu 44
Metering 50, 64, 70
Metering monitor 65
Metering profiles 19, 50
Metering pumps with bleed valve 30
Metering pumps with self-bleeding 30
Metering pumps without integral relief valve 31
Metering pumps without self-bleeding 27
Minimum Stroke Length 88
Module 44
Monitoring 53

N
New 68
Nominal pressure 52
Normal 51

O
Operating indicator (green) 15, 23
Operating menu 140
Operating mode selection 44
Operating Modes 21, 23
Operating overview 138
Operation 73
Optimum 50
Option 64
Ordering Information 124
Out-gassing 49, 53
Overview of Equipment 14

P
Pacing relay 38, 39
Password 43, 71
Pause 22, 23, 34, 35, 65
Performance Data 87
Polarity 63
Power consumption 89
Pressure 52
Pressure display 16
Pressure stage 52
Pressure unit 62
Priming 23, 73
Priming pressure 30
Priming time 67
Protection against contact and humidity 90
Protection class 90
Protection menu 70
Pulse control 46
Pump active 64

Q
Qualification of personnel 11

R
Relay 22, 37, 63
Relay polarity 64
Relay type 63
Relevant EC directives 137
Repairs 77
Replacement position 79
Replacing the diaphragm 79
Replacing the dosing head 62
Reproducibility 88
Return line 31
Return pipe 27, 30

S
Safety Chapter 8
Safety declaration form 13
Safety requirements 90
Scope of Delivery 13
Secondary display 16
Secondary displays 43, 145
SEK 30
SEK types 21
Self-Bleeding 21
Semiconductor switch 38, 39
Serial number 44, 137
Service 70
Set up 41
Set up mode 43
Set Up, chapter 44
Set-up overview 138
Setting the timer 68
Settings 44
Shipping weight 91
Side band 47, 48, 49
Sleeve 31
Slot 15
Slow 50
Sockets 15
Software 44
Sound pressure level 12, 91
Standard installation 32
Starting a batch 73
Stop 22, 23
Storage 13
Stroke counter 71
Stroke length 49
Stroke length, manual 49
Stroke rate 64
Suction stroke 19, 20, 49, 51
Summer time 67
Sunday 67
Supplementary information 2
Supply voltage 34
Switch-on counter 44
Symbols 32

System 62

T

Technical Data 87
Temperatures 90
Test (function) 23
Time 44, 67, 68
Time event 68
Timer 68
Timer activation 68
Total number of strokes 44
Total operating time 44
Transport 13
Troubleshooting 82

U

Unpacking 13
Upper side band 49

V

Viscosity 49, 51, 88
Volume / Stroke 44
Volume counter 71
Volume unit 62

W

Warning 64
Warning alert 16, 37
Warning indicator 15
Warning indicator (yellow) 23
Warning messages 84
Warning sign 8

ProMinent GmbH
Im Schuhmachergewann 5-11
69123 Heidelberg, Germany
Germany
Telephone: +49 6221 842-0
Fax: +49 6221 842-612
Email: info@prominent.com
Internet: www.prominent.com

984586, 3, en_GB

© 2015

Supplementary Operating Instructions

Solenoid Metering Pump gamma/ X

Modules, Options, Accessories

EN

The instructions contained herein apply only in conjunction with the "Operating Instructions for Solenoid Metering Pump gamma /X, GMXa"

Please carefully read these operating instructions before use. · Do not discard.
The operator shall be liable for any damage caused by installation or operating errors.
The latest version of the operating instructions are available on our homepage.

Table of contents

1 Supplementary Operating Instructions for Bluetooth Control 4

1.1 Description of Bluetooth Functionality 4
1.2 Safety 4
1.3 Prerequisites 5
1.4 App Test Operation with Pump Simulation 6
1.5 Establishing a Bluetooth Connection 7
1.5.1 Enable Bluetooth functionality on both devices 7
1.5.2 Initiating a Search for Bluetooth Devices on the Smart Device 7
1.5.3 Couple the smart device to a pump that has been found 8
1.5.4 Connecting the Smart Device to a pump that has been found 8
1.5.5 Disconnecting the Smart Device from the Metering Pump 9
1.6 Setting and Operating 9
1.7 Further Information / Functions 10
1.7.1 Bluetooth LED Signal Code 10
1.7.2 Finding a Metering Pump Amongst Several Metering Pumps 10
1.7.3 Managing the *'Connect to Device'* List 11
1.7.4 Saving and Restoring the Pump Configuration 11
1.7.5 Bluetooth Address 12
1.8 Troubleshooting 12
1.9 Extract EC / EU Declaration of Conformity gamma/ X with Bluetooth 14

2 Supplementary Operating Instructions CANopen 15

2.1 About this pump 15
2.2 Control Elements 16
2.3 Installation, electrical 16
2.4 Emergency mode 18
2.5 Troubleshooting 18
2.6 Accessories 19
2.7 Appendix 19
2.7.1 Object list metering pump gamma/ X, GMXa 19
2.7.2 EMERGENCY 34
2.7.3 Object explanations 36
2.7.4 Changing the CANopen node address (node ID) 38
2.7.5 Transfer rate (baud rate) 39
2.7.6 Calibration, explanations 39
2.7.7 Firmware update 39
2.7.8 Data storage 39
2.7.9 Received directives / standards 39

3 Supplementary Operating Instructions PROFIBUS® 40

3.1 Prerequisites 40
3.2 Adjusting the pump 40
3.2.1 General 40
3.2.2 Activating / deactivating PROFIBUS® 40
3.2.3 Setting the slave address 41
3.3 Special features in PROFIBUS® mode 42
3.3.1 General 42

3.3.2 Display..... 42
3.3.3 LEDs on the PROFIBUS® module..... 43
3.3.4 Use metering monitor..... 43
3.4 Installation..... 43
3.5 Operation..... 45
3.5.1 General..... 45
3.5.2 GSD file..... 45
3.5.3 Data objects gamma/ X, GMXa..... 45
3.5.4 Data objects gamma/ L, GALa..... 54

1 Supplementary Operating Instructions for Bluetooth Control

1.1 Description of Bluetooth Functionality

The metering pump gamma/ X with Bluetooth functionality can largely be wirelessly controlled and monitored via a Bluetooth-enabled Android Smart device using the "gamma/ X" app. A log file containing pump-related events can also be displayed and e-mailed. The app can also be used to save and then restore the pump configuration. The pump configuration can also be e-mailed.

The Bluetooth module is a Class 2 radio product under the R&TTE Directive.

Fig. 1: Device classification label

1.2 Safety

CAUTION!
Danger from hackers
The user has to ensure the IT safety of his smart device (smartphone, tablet ...) to ensure that the metering pump cannot be controlled by hackers.

CAUTION!
Change the temporary *'password'* in the pump menu under *'Settings* ➔ *Service* ➔ *Password'*.

CAUTION!
Only download the "gamma /X" app from the Google Play Store - not from other sources.

CAUTION!
Do not modify the device.

In particular do not increase the size of the aerial.

Qualification of personnel

Personnel must:

- Be familiar with Android smart devices.
- Have read and understood the pump operating instructions and these operating instructions as well.

Licences for Bluetooth metering pumps

The Bluetooth metering pump can be operated licence-free in the following countries:

Belgium, Denmark, Germany, Estonia, Finland, France, Greece, Great Britain, Ireland, Italy, Canada, Latvia, Lithuania, Luxembourg, Malta, the Netherlands, Norway, Austria, Poland, Portugal, Sweden, Switzerland, Slovakia, Slovenia, Spain, Czech Republic, Hungary, USA and Cyprus.

CAUTION!
For all other countries:

Check whether the operation of Bluetooth metering pumps is permitted in the country in question. Please get in touch with the ProMinent head office.

Emissions

WARNING!
The Bluetooth metering pump is not designed for applications in which interference from or by the metering pump can lead to fatal injury or serious personal injury.

WARNING!
The Bluetooth metering pump can cause interference to or even destroy radio and television frequencies.

This needs to be avoided.

– For assistance, refer to the "Troubleshooting" chapter.

Label

In certain countries, certain information has to be visible on the outside of the metering pump:

Country	Information
USA:	Contains FCC ID: T7VPAN10
Canada:	Contains IC: 216Q-PAN10 Contiens IC: 216Q-PAN10

1.3 Prerequisites

Prerequisites for operation:

- Metering pump gamma/ X with Bluetooth functionality (identity code characteristic "Remote stop/Remote control" = "B, with Bluetooth")
- The metering pump gamma/ X has been fully electrically and hydraulically installed
- Bluetooth-enabled Android smart device - see *'These Android smart devices support the "gamma/ X" app (dated 01.09. 2015):' on page 6*
- Only for handling log files and downloading the app: the smart device has to have access to the internet.
- The "gamma/ X" app can be downloaded free of charge from the Google Play Store:

Fig. 2: QR code for "gamma/ X" download app

CAUTION!
Only download the "gamma /X" app from the Google Play Store - not from other sources.

These Android smart devices support the "gamma/ X" app (dated 01.09. 2015):

Manufacturer	Model	Android operating system
HTC	One M8	5.0.1
Sony	Xperia Z3 Compact	5.0.2
Motorola	Moto G (2nd generation)	5.0.2
Huawei	Ascend P7	4.4.2
LG	Nexus 5	5.1.1
Samsung	Galaxy S4	4.4.2
Samsung	Galaxy Tab 4	4.4.2

If you have another Android smart device or Android operating system, you can still try to see if the app works correctly with it. However ProMinent has not tested this.

1.4 App Test Operation with Pump Simulation

It is possible to check how the app works even without a metering pump. Use the *'GMXa simulation'* pump simulation to do so.

1. Enable Bluetooth functionality on the smart device - see operating instructions for the smart device.
2. Press *'gamma/ X'* on the app.
   ⇨ The *'Connect to device'* window appears after a few seconds with the *'GMXa simulation'* "device".
3. Press *'GMXa simulation'*.
   ⇨ A *'Simulation ➔ Password'* appears.
4. Enter any 4 digits and press *[Enter]*.
   ⇨ Now you can gain an impression of how certain setting options on the app look and work.

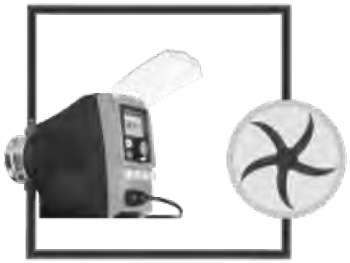

An animation shows whether the simulated pump is currently "pumping" or not.

Fig. 3: Animation

1.5 Establishing a Bluetooth Connection

To establish a Bluetooth connection between the metering pump and the smart device:

1 - Enable Bluetooth functionality on both devices

2 - Initiate a search for Bluetooth devices nearby on the smart device

3 - Couple the smart device to a pump that has been found

4 - Connect the smart device to a pump that has been found

1.5.1 Enable Bluetooth functionality on both devices

1.

The 'System' menu only appears if [Start/Stop] has stopped the metering pump.

Enable Bluetooth functionality on the metering pump:

'Settings ➔ *System* ➔ *Bluetooth enabled'*

⇨ The blue Bluetooth LED flashes and the Bluetooth symbol appears on the display.

2. Enable the Bluetooth function on the smart device - see operating instructions for your smart device.

1.5.2 Initiating a Search for Bluetooth Devices on the Smart Device

If a search is made for the metering pump for the first time:

Stand next to the metering pump in question and trigger a search for Bluetooth devices on the smart device *'Settings* ➔ *Bluetooth'*.

⇨ A metering pump gamma/ X with the Bluetooth name *'ProMinent GMXa (GMXa XYZ)'* appears under *'Available'*. "XYZ" are place holders for the last digits of the serial number of the metering pump.

In all other cases

Stand next to the metering pump in question and trigger a search for Bluetooth devices on the smart device, in the gamma/ X, using *'Refresh list'*.

⇨ A metering pump with the name *'GMXa XYZ'* appears under *'Connect to device'*. "XYZ" are place holders for the last digits of the serial number of the metering pump.

1.5.3 Couple the smart device to a pump that has been found

The coupling is permanent after coupling. This is the case except when the pump has been coupled to a further 6 Bluetooth devices; then the smart device coupled first disappears from the list of coupled devices.

1. Press "gamma/ X" on the app.
   ⇨ The app now creates a *'Connect to device'* list in which only metering pumps gamma/ X are displayed with Bluetooth functionality.

   A metering pump gamma /X has a Bluetooth name like "GMXa XYZ".

   If 'Reachable' does not appear in the list of metering pumps found, hold the smart device closer to the pump and update the list by pressing 'Refresh list'.

   The 'GMXa simulation' pump simulator, which can be used to try out the app without a metering pump, always appears - see chapter "App Test Mode With Pump Simulation".

2. Press *'GMXa XYZ'*.
   ⇨ A window, such as *'Bluetooth pairing request'* with a multi-digit figure appears on the display of the smart device: the smart device security key.

   'Bluetooth pairing' with a multi-digit figure appears on the display of the metering pump: the smart device security key.

3. Only if the two security keys match, press *'Couple'* or *'Pair'* on the display of the smart device.

   Cancel and repeat the process if the two security keys do not match.

1.5.4 Connecting the Smart Device to a pump that has been found

If a dosing pump has not yet been coupled to a smart device to which it has to be connected, it first has to be "coupled" to it - see ↳ Chapter 1.5 'Establishing a Bluetooth Connection' on page 7.

1. Press "gamma/ X" on the app to connect the smart device to a pump that has been found.

   ⇨ The *'Connect to device'* window appears with the Bluetooth devices found.

   'Reachable' should appear under *'GMXa XYZ'*.

   If 'Reachable' does not appear in the list of metering pumps found, hold the smart device closer to the pump and update the list by pressing 'Refresh list'.

2. Press *'GMXa XYZ'*.

   ⇨ A prompt for a *'Password'* appears.

3. The temporary metering pump *'Password'* consists of the last 4 digits of its serial number.

   Enter the *'Password'*.

   ⇨ The metering pump can now be controlled by Bluetooth.

CAUTION!
Change the temporary *'password'* in the pump menu under *'Settings ➔ Service ➔ Password'*.

1.5.5 Disconnecting the Smart Device from the Metering Pump

1. Leave the app menu for the metering pump.

   ⇨ A *'Disconnect from device'* window appears.

2. Press *'Yes'*.

1.6 Setting and Operating

CAUTION!
If a hook ✓ is visible in place of an angle ❭ to the right of a menu point on the app, then you trigger a function, such as *'Tap here to prime'*, when it is pressed.

The individual setting options on the app function similar to the corresponding setting options on the metering pump gamma/ X.

Exceptions:

There is an additional menu: *'Show log'*.

You can view the pump's log file with *'Show log'*. The log file contains messages about events and faults on the pump.

Use *'Send log via email'* to e-mail the log file, for example to the ProMinent Service.

Starting metering pump

First use *[Start/Stop]* to cancel manual stop on the metering pump.

A slide switch is visible in the header of the app.

It can be used to start ("1") or stop ("0") the pump.

1.7 Further Information / Functions

1.7.1 Bluetooth LED Signal Code

LED	Meaning
lit	The Bluetooth function on the metering pump is switched to *'active'* and the metering pump has a connection to a smart device.
flashes slowly	The Bluetooth function on the metering pump is switched to *'active'* but the metering pump does not have a connection to a smart device.
flashes quickly for 5 s	The user uses the app to try to find the Bluetooth metering pump that the user wishes to control amongst several Bluetooth metering pumps - see *Chapter 1.7.2 'Finding a Metering Pump Amongst Several Metering Pumps' on page 10*.
off	■ The Bluetooth function on the metering pump is switched to *'inactive'*. ■ The metering pump is disconnected from the mains/power supply.

1.7.2 Finding a Metering Pump Amongst Several Metering Pumps

The "gamma/ X" app can help users to find a specific metering pump amongst several metering pumps:

> ***Valid coupling***
> *A coupling must have been made in the past and still be applicable to be able to use the identification function.*

Option 1:

1. Switch to the metering pump menu in the app and press the image of the metering pump beside the slide switch.

   ⇨ The blue Bluetooth LED on the metering pump searched for flashes for 5 seconds.

Option 2:

2. Press the small image in the *'connect to device'* menu in the app

   ⇨ The blue Bluetooth LED on the metering pump searched for flashes for 5 seconds.

1.7.3 Managing the *'Connect to Device'* List

The 'Connect to device' list on the app can be updated by pressing 'Refresh list'.

Additional information on the device	Meaning
'Known device'	The device has already been coupled with the smart device.
'Reachable'	The device is within reach of the smart device.
'Out of range'	The device is outside of the reach of the smart device.

Delete device

If you wish to delete a device from the 'Connect to device' list, then you also have to delete the device from the Bluetooth menu in the smart device setting app.

Otherwise the coupling is maintained.

1. To delete a device from the *'Connect to device'* list, swipe along the line containing the device name.
   ⇨ *'Delete'* appears.
2. Press *'Delete'*.
   ⇨ The line with the device name disappears.

1.7.4 Saving and Restoring the Pump Configuration

Saving the pump configuration

1. Use *[Start/Stop]* to stop the metering pump.
2. Connect the smart device to the metering pump.
3. Under *'Expert Settings ➔ Backup '* press the **' + '** button.
   ⇨ The app will ask whether you are sure you want to create a backup.
4. Answer *'yes'* when prompted.
   ⇨ A progress bar will appear.
5. Once the process is complete, assign a name to the backup.

The name must contain only upper and lower case characters and spaces.

⇨ The pump configuration is saved on the smart device as a backup file

Restoring the pump configuration

CAUTION!
Warning of data loss
Do not close the app during restoring.

Do not interrupt the Bluetooth connection, for example by moving the smart device out of the range of the pump.

A pump configuration that has been previously saved, can be restored if need be.

(The pump configuration is dependent on the identity code.)

1. Use *[Start/Stop]* to stop the metering pump.
2. Connect the smart device to the metering pump.
3. Press the relevant backup file under *'Expert settings ➔ Restore pump configuration'*.
   ⇨ A progress bar appears and the pump configuration is saved on the metering pump.

Deleting the backup file from the smart device

1. Open the menu item *'Restore pump configuration'* in the gamma/ X app..
2. Swipe sidewards on a backup file.
   ⇨ A button appears.
3. Delete the backup file by pressing the button.

1.7.5 Bluetooth Address

The metering pump's Bluetooth address can be found:

- ... in the app under *'Device info ➔ BT address'*
- ... in the metering pump under *'Information ➔ BT device address'*

1.8 Troubleshooting

Fault description	Cause	Remedy
The metering pump does not start although I have pressed the slide switch in the app.	The metering pump has been stopped using *[Start/Stop]* or a fault is pending.	Use *[START/STOP]* to start the metering pump. Rectify the fault.
The metering pump and other devices are interfering with each other.*	The WiFi signal from the smart device is interfering with the connection.	Switch off WiFi on the smart device.
	Interference with other devices is causing a problem.	Change the orientation of the metering pump until the problems disappear. Change the installation site of the metering pump until the problems disappear.

Fault description	Cause	Remedy
		Connect the metering pump and the devices experiencing interference to different power circuits. Call in a high-frequency engineer.
	Other devices are interfering with the Bluetooth connection to the metering pump.	Increase the gap between the devices and the metering pump.

* Confirm or cancel this by switch the Bluetooth metering pump on and off.

1.9 Extract EC / EU Declaration of Conformity gamma/ X with Bluetooth

In accordance with DIRECTIVE 2006/42/EC OF THE EUROPEAN PARLIAMENT AND OF THE COUNCIL, Appendix I, BASIC HEALTH AND SAFETY REQUIREMENTS, section 1.7.4.2. C.

We,

- ProMinent GmbH
- Im Schuhmachergewann 5 - 11
- D - 69123 Heidelberg, Germany,

hereby declare that the product specified in the following, complies with the relevant basic health and safety requirements of the EC Directive, on the basis of its functional concept and design and in the version distributed by us.

Any modification to the product not approved by us will invalidate this declaration.

Extract from the EC / EU Declaration of Conformity

Designation of the product:	Metering pump, gamma/ X product range	
Product type:	GMXa _ _ _ _ _ _ _ _ _ _ _ _U _ _ _ Y _ B Y = 0, 3, 4, 5	
Serial number:	see nameplate on the device	
Relevant EC directives:	Machinery Directive (2006/42/EC) Compliance with the protection targets of the Low Voltage Directive according to Appendix I, No. 1.5.1 of the Machinery Directive RoHS- Directive (2011/65/EU) R&TTE Directive (1999/5/EC)	
	up to 19.04.2016 EMC - Directive (2004/108/EC)	from 20.04.2016 EMC Directive (2014/30/EU)
Harmonised standards applied, in particular:	EN ISO 12100:2010 EN 809:1998 + A1:2009 + AC:2010 EN 61010-1:2010 EN 61000-6-3:2007 + A1:2011 EN 61000-6-2:2005 EN 300 328 V1.8.1:2012 EN 50581:2012	
Date:	21.03.2016	

You will find the EC Declaration of Conformity to download on our homepage.

2 Supplementary Operating Instructions CANopen

2.1 About this pump

Solenoid metering pumps gamma/ X with CAN connector differ from standard pumps as they can be connected to a CANopen bus system. A CAN pump gamma/ X can be connected to a CANopen bus or used on its own.

Example:

- Measurement-value dependent metering of sodium-calcium hypochlorite into a swimming pool water circuit, where in the operating mode *'CANopen'*, the pump is controlled from a controller.

A gamma/ X in the "CANopen" version (Identity code feature "Control type" = C or D) is designed for incorporation in a CANopen system.

2.2 Control Elements

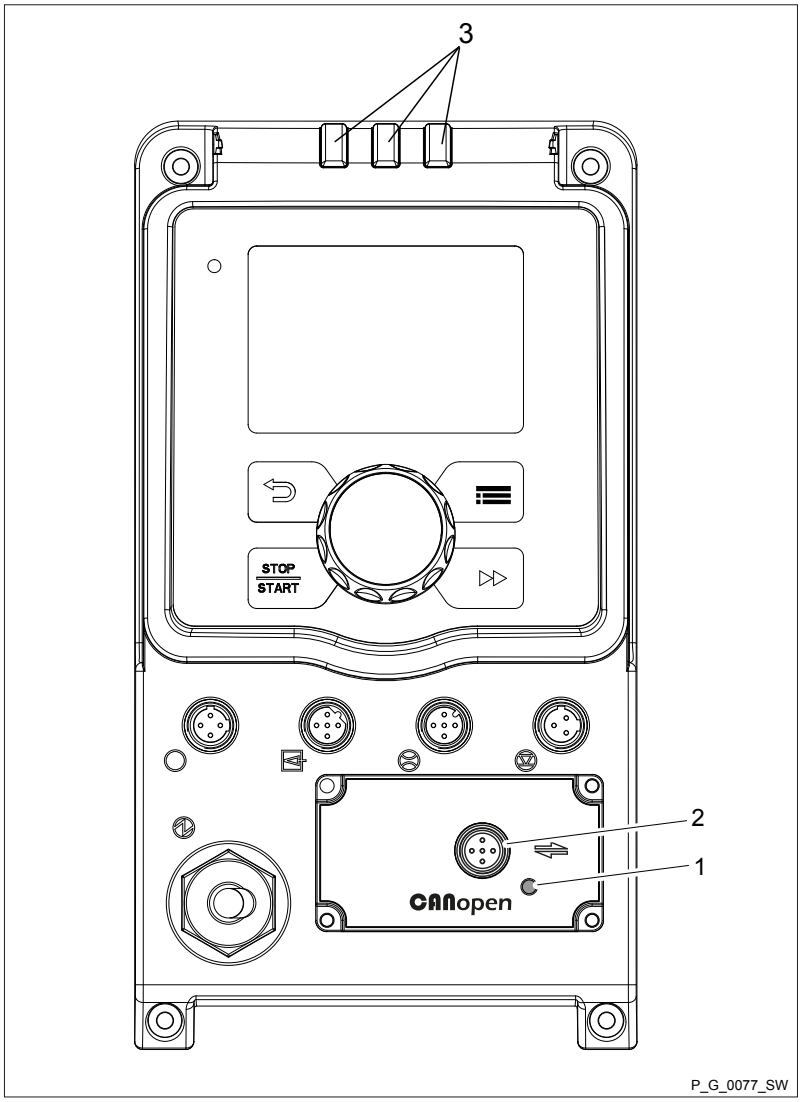

Fig. 4: Control Elements

1 Status LED CAN bus
2 Socket "CAN bus"
3 Device LEDs

2.3 Installation, electrical

CAUTION!

Pump can be damaged

If the CAN cable is not correctly screwed in, the IP65 protection rating is not achieved.

– Manually screw in the CAN cable glands until they reach the stop.

CAUTION!

Pump can be damaged

The panel connector at the housing can break off.

– Never connect a T-coupler directly to the housing.

Connect the CAN cable with the CANopen bus connector as shown below (For more - see the documentation for your CANopen installation).

Insert the mains plug in the power socket - the metering pump starts to pump as necessary.

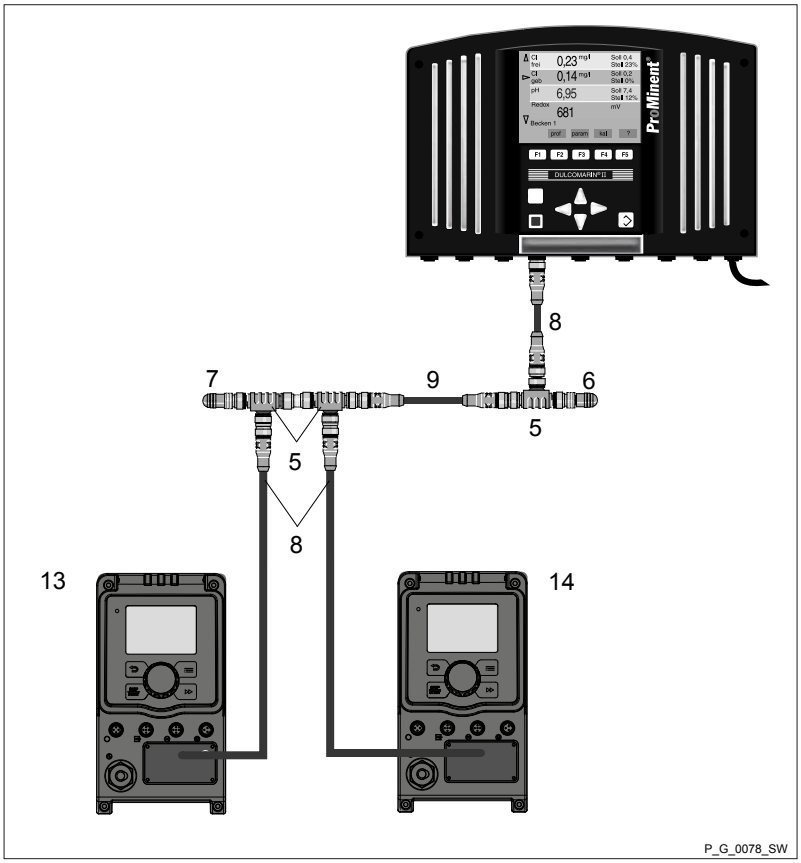

Fig. 5: CAN connector for metering pumps (example with Dulcomarin II as control)

5 T-coupler, M 12, 5-pole CAN
6 Termination resistance M12 coupling
7 Termination resistance M12 plug
8 CAN connecting cable CAN connecting cable
9 CAN connecting cable
13 CAN pump gamma/ X e.g. for acid
14 CAN pump gamma/ X e.g. for alkali

CANopen-Bus connector

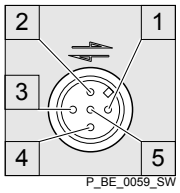

Fig. 6: Pump pin assignments (male)

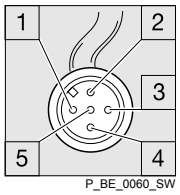

Fig. 7: CAN cable assignments (female)

The "CANopen bus connection" takes place via a five-pin plug.

1 Shielding
2 CAN V+ (supply voltage – not connected)
3 CAN GND (reference potential)
4 CAN H (bus line - dominant high)
5 CAN L (bus line - dominant low)

2.4 Emergency mode

You can guard against the possibility of the CANopen bus control failing in the following way:

1. Program an auxiliary frequency into the pump that fits optimally with a stroke length of 30 ... 100 % into your process in emergency operation.
2. As soon as emergency operation is required, run the pump using the "external control" socket on the auxiliary frequency - see "Operating Instructions for Solenoid Metering Pump gamma/ X GMXa" - "Installation, electrical".

2.5 Troubleshooting

The CANopen status LED indicates the status of the CAN connection.

The display for operating and fault status is carried out using 3 other LEDs - see "Operating Instructions for Solenoid Metering Pump gamma/ X GMXa“.

Flash code CANopen status LED, top

Colour	Flash code	Cause	Remedy
green	illuminated	Bus status OPERATIONAL	- (Pump normal operation)
green	flashing *	Bus status PRE-OPERATIONAL	wait briefly or start the pump over the bus
green	Single flashing **	Bus status STARTUP	wait briefly of set the pump for active bus operation - see "Set-up" chapter
green	off	Error (BUSOFF, Error,…)	CAN bus test
green	flickering	Bus status INIT	wait briefly

Ignore the flash codes for approx. 2 minutes after connecting the metering pump.

For "Error messages about CANopen-telegram", see the end of the appendix.

2.6 Accessories

Accessories	Order no.
T-coupler M12 5-pin CAN	1022155
Termination resistance M12 coupling	1022154
Termination resistance M12 plug	1022592
Connecting cable - CAN, M 12, 5-pole, 1 m	1022139
Connecting cable - CAN, M 12, 5-pole, 2 m	1022140
Connecting cable - CAN, M 12, 5-pole, 5 m	1022141
Connecting cable - CAN, sold by the metre	1022160
Coupling, M12, 5-pole Screw connector	1022157
Plug CAN M12, 5-pole Screw connector	1022156

2.7 Appendix

2.7.1 Object list metering pump gamma/ X, GMXa

2.7.1.1 Communication profile area 0x1000-0x1FFF

Index	S	Name	Type	Description			
1000h	1	p_ident.d_profile	U32	Device type (10.2.1 in 450)	0001 01C2h	RO	M
1001h	1	Error register	U8	9.6.3 in 301		RO	M
1010h	1	Save all parameters	U32			RW	O
	2	Save comm.. parameters					
	3	Save process.. parameters					
1011h	1	Load(restoredefault) parameters	U32			RW	O

Index	S	Name	Type	Description			
	2	Load comm.. parameters					
	3	Load process.. parameters					
1017h	1	p_ident.w_heart_beat_time	U16	50-2000	800	RO	O
1018h	0	Identification					M
		p_ident.b_entries	U8		4	RO	
	1	p_ident.d_vendor_ID	U32		0xE1	RO	
	2	p_ident.d_product_code	U32		0x0E020115	RO	
	3	p_ident.d_rev number	U32		1	RO	
	4	assemblyID	U32	Unit serial number		RW	

Transmit-PDOs MAPPING-Parameter

Index	S	Name	Type	Description	Mapping
1A00h	0	**TPDO1**			
	1	DP_state	U16	Status metering pump (base)	0x2A1000**00**10
	2	DP_output_man (actual)	U16	Pump frequency (actual) in %	0x2A0100**00**10
	3	DP_stroke_len	U8	Stroke length	0x2A0400**00**08
1A01h	0	**TPDO2**			
	1	DP_level	U8	Liquid level metering container	0x2A0500**00**08

Receive-PDOs MAPPING-Parameter

Index	S	Name	Type	Description	Mapping
1600h	0	**RPDO1**			
	1	DP_output_cont	U16	Pump frequency (setpoint) in %	0x2A0000**00**10
1601h	0	**RPDO2**			
	1	DP_batch_time_stamp	U16	Batch time stamp	0x2A0200**00**10
	2	DP_batch_value	U16	Factor (setpoint)	0x2A0300**00**10

2.7.1.2 Manufacturer specific profile area 0x2000-0x5FFF

Index	S	Name	Type	Description	Objects	Attr
2A00h	0	DP_output_cont (set-point)	U16	Frequency in % (0=100.0%)	RPDO1	wr
2A01h	0	DP_output_actual	U16	Frequency in % (0=100.0%)	TPDO1	ro
2A02h	0	DP_batch_time_stamp	U16	Time stamp last received com-mand	RPDO2	wo
2A03h	0	DP_batch_value	U16	Batch factor	RPDO2	wo
2A04h	0	DP_stroke_len	U8	Stroke length	TPDO1	rO
2A05h	0	DP_level	U8	Liquid level metering container	TPDO2	rO
2A10h	0	DP_state	U16	0=out of ctrl, 1=mem, 2=cal, 3=pos/neg 4=prime, 5=warning, 6=errors, 7=stops, 8-11=mode, 12=aux;13=flow; 14=pause, 15=hand/bus	TPDO1	ro
2A11h	0	DP_Control	U8	1= batch-mem, 2=setp. pos/neg, 3=calibrated, 4=flowctrl active, 6=reset	SDO	rw
2A12h	0	DP_Mode	U8	0=stop,1=manual, 2=batch,	SDO	wo
2A20h	0	DP_stroke_max	U16	max. stroke rate (strokes/min)	SDO	ro
2A21h	0	DP_metering volume	Float	in 1/stroke (at 100% stroke)	SDO	wr
2A22h	0	DP_measuring_unit	U8	0=litre, 1=gallon	SDO	wr
2A30h	0	DP_volume	U32	in ml since last reset	SDO	ro
2A31h	0	DP_stroke_cnt	U16	strokes since last reset	SDO	ro
2A33h	0	DP_rem_stroke	U16	Remaining stroke no. (in batch mode)	SDO	ro
2A35h	0	`PCO_HighestSubIndex`	U8			ro
	1	FlowControl	U8	Bit	SDO	wo
	2	BatchMem	U8	Bit	SDO	wo
	3	ClearCount	U8	Bit	SDO	wo
3FBBh	0	`PCO_HighestSubIndex`	U8			
	1		U32	Identity code		RO

Index	S	Name	Type	Description	Objects	Attr
	2		U32			RO
	3		U32			RO
	4		U32			RO
	5		U32			RO
	6		U32			RO
	7		U32			RO
	8		U32			RO
3FBCh	0	PCO_HighestSubIndex	U8			
	1		String	Serial number		RO
	2		String			RO
	3		String			RO
	4		String			RO
	5		String			RO
	6		String			RO
	7		String			RO
	8		String			RO
3FBDh	0	PCO_HighestSubIndex	U8			
	1		String	Hardware Version		RO
	2		String			RO
	3		String			RO
3FBEh	0	PCO_HighestSubIndex	U8			
	1		String	Software Version		RO
	2		String			RO
	3		String			RO

0x5100 – 0x5500

Index	S	Name	Type	Description Max	Objects	Attr
5100h	1	Einschalt-zähler	U32	Switch-on counter	SDO	RO
5101h	1	Fehlerflags	U32	Pump error flags	SDO	RO
5102h	1	Warnflags	U32	Pump warn-ings	SDO	RO
5105h	1	Total calibra-tion volume	U32	Total stroke counter	SDO	RO

Index	S	Name	Type	Description Max	Objects	Attr
5106h	1	Dosiermen-genzähler	Float	Metering volume counter	SDO	RO
5107h	1	Calibration strokes:	U32	Calibration strokes	SDO	RO
5108h	1	Rest-Dosier-menge	Float	Remaining metering quantity	SDO	RO
5109h	1	Ist-Hublänge	Float	Current stroke length	SDO	RO
510Ah	1	Soll-Hublaenge	Float	Setpoint stroke length	SDO	RW
510Bh	1	Soll-Hubfre-quenz	U16	Setpoint stroke rate	SDO	RW
510Ch	1	Ist-Hubfre-quenz	U16	Current stroke rate	SDO	RO
510Dh	1	Dosiervo-lumen pro Auslösung	Float	Metering vol-umes per release	SDO	RW
510Eh	1	Ist-Dosierleis-tung	Float	Current metering capacity	SDO	RO
510Fh	1	Dosierzeit für Batch	U16	Metering time for batch in sec	SDO	RW
5110h	1	maximale Dosierleis-tung	Float	Maximum capacity	SDO	RO
5112h	1	Soll-Dosier-leistung	Float	Setpoint metering capacity	SDO	RW
5113h	1	Auxiliarfre-quenz	U16	Auxiliary fre-quency	SDO	RW
5114h	1	Auxiliar-Dos-ierleistung	Float	Auxiliary capacity	SDO	RW
5115h	1	Dosierart	U32	Metering type (0-optimum, 1-fast,2-sinus mode,3-cont. 4-DFMa)	SDO	RW
5117h	1	Soll-Betrieb-sart	U32	Setpoint operating mode (0-stop,1-manual,..)	SDO	RW
5118h	1	Ist-Betrieb-sart	U32	Current oper-ating mode	SDO	RO

Index	S	Name	Type	Description Max	Objects	Attr
5119h	1	Soll-Unterbetriebsart	U32	Setpoint operating submode (0-0..20mA, 1-4..20mA,4 linear curve,..)	SDO	RW
511Ah	1	Ist-Unterbetriebsart	U32	Current operating submode	SDO	RO
511Bh	1	Betriebsmodus (Automatik On/Off)	U32	Operating mode (automatic on(1)/ off(0))	SDO	RW
511Ch	1	Konzentrationsgesteuerter Betrieb an/ aus	U32	Concentration-controlled operation on(1)/ off(0)	SDO	RW
511Eh	1	Dauer des Ansaugens	U16	Priming duration in sec	SDO	RW
511Fh	1	Batch-Faktor	U32	Batch factor (1-99999)	SDO	RW
5122h	1	Kontakt-Faktor	Float	Contact factor (0.01-99.99)	SDO	RW
5147h	1	Maximale Hubfrequenz	U16	Maximum stroke rate	SDO	RO
5148h	1	Gesamtbetriebsdauer	U32	Operating period in sec	SDO	RO
5152h	1	Dosiermenge pro Vollhub	Float	Metering quantity per full stroke in ml (stroke length100%)	SDO	RO
5153h	1	Löschbarer Hubzähler	U32	Deletable stroke counter	SDO	RW
5154h	1	Löschbarer Mengenzähler	Float	Deletable volume counter	SDO	RW

Strings

Index	S	Name	Type	Description	Objects	Attr
5D00h	0	PCO_HighestSubIndex	U8			RO
	1	Name1	String	Pump name		RO
	2	Name2	String			RO

Index	S	Name	Type	Description	Objects	Attr
	3	Name3	String			RO
	4	Name4	String			RO
	5	Name5	String			RO
	6	Name6	String			RO
	7	Name7	String			RO
	8	Name8	String			RO
5D01h	0	PCO_HighestSubIndex	U8			RO
	1	Location1	String	Pump installation location		RO
	2	Location 2	String			RO
	3	Location 3	String			RO
	4	Location 4	String			RO
	5	Location 5	String			RO
	6	Location 6	String			RO
	7	Location 7	String			RO
	8	Location 8	String			RO
5042h	1	Identification_LED	U16	0- off	SDO	rw
				>0 Set identification time (LED yellow +red flash for duration)		
				1 equivalent to approx. 10 ms		
5FEE	0	CANopenStackRevision	UINT32	ProMinent CANopen-Stack-Revision		RO

2.7.1.3 Device specific area 0x51000-0x5FFF

HMI area 0x5100 – 0x5FFF

Index	S	Name	Type	Description	Objects	Attr
5111h	1	sw_version_ctrl	U32	Software version of control		RO
5112h	1	hw_version_ctrl	U32	Hardware version of control		ro
5113h	1	sw_version_fu	U32	Software version of FC		RO

Index	S	Name	Type	Description	Objects	Attr
5114h	1	hw_version_fc	U32	Hardware version of FC		RO
5115h	1	sw_version_pfc	U32	Software version of PFCU		RO
5116h	1	hw_version_pfc	U32	Hardware version of PFC		RO
5118h	1	serial_number	U32	Serial number of SxCn		RO

Index	S	Name	Type	Description	Objects	Attr
5120h	1	Nominal frequency	U16	Setpoint frequency	PDO	Rw
5121h	1	Actual frequency	U16	Setpoint frequency	PDO	RO
5122h	1	Nominal mode	U8	Setpoint operating mode:	PDO	Rw
5123h	1	Actual mode	U8	Actual operating mode	PDO	RO
5124h	1	Analogue mode	U8	Analogue mode:	PDO	Rw

Index	S	Name	Type	Description	Objects	Attr
5125h	1	Analogue curve	U8	Curve type for analogue		ro
5126h	1	Curve-IP1	U16	Current at curve point 1		rW
5127h	1	Curve-FP1	U16	Stroke rate at curve point 1		rW
5128h	1	Curve-IP2	U16	Current at curve point 2		rW
5129h	1	Curve-FP2	U16	Stroke rate at curve point 2		rW
512Ah	1	Auxiliary	U16	Auxiliary frequency		ro
512Bh	1	Metering mode	U8	Metering mode (metering profile)		Rw

Index	S	Name	Type	Description	Objects	Attr
512Ch	1	Batch memory	U8	Saving function for batch metering:	PDO	ro
512Dh	1	Batch factor	U16	Batch_factor	PDO	ro
512Eh	1	Contact memory	U8	Saving function for contact metering:	PDO	ro
512Fh	1	Contact factor	U16	Contact factor	PDO	ro
5130h	1	Pressure control	U8	Pressure gauge		Rw

Index	S	Name	Type	Description	Objects	Attr
5131h	1	Calibration counter	U8	Calibration stroke counter	PDO	Rw
5132h	1	Calibration value	U16	Calibration value (total quantity)	PDO	Rw

Index	S	Name	Type	Description	Objects	Attr
5133h	1	Viscosity	U8	Viscosity level		ro
5134h	1	Stroke length	U16	Stroke length	PDO	ro
5135h	1	Stroke counter	U32	Stroke counter	PDO	rO
5136h	1	Quantity counter	U32	Volume counter	PDO	rO
5137h	1	Clear counters	U8	Clear counter		WO
5138h	1	Strokes left	U32	Remaining strokes	PDO	RO

Index	S	Name	Type	Description	Objects	Attr
5139h	1	Quantity left	U32	Remaining quantity	PDO	RO
513Ah	1	User code	U16	User password	PDO	WO
513Bh	1	Language index	U8	Language index		RW
513Ch	1	Analogue external	U16	Analogue value at external input	PDO	RO
513Dh	1	Quantity per stroke	U16	Metering quantity per stroke at 100% stroke length	PDO	RO
513Eh	1	NomFreq_Litreper-Hour	U16	Requested metering frequency in litres/ hour	PDO	RO

Index	S	Name	Type	Description	Objects	Attr
513Fh	1	Metering control	U8	Metering monitoring		RW
5140h	1	Metering-Control-Pulses	U16	Defective strokes for metering monitoring		RW
5141h	1	Dosing-Control-by-Aux	U8	Metering monitoring in aux mode		RW
5142h	1	Metering-Control-Errorsignal	U8	Metering monitoring error signalling		RW
5143h	1	Access level	U8	Access protection level (0-none, 1-menu blocked, 2-continuous display and menu blocked)		RW
5144h	1	Unit	U8	Pump unit (0-litre, 1-gallon)		RW

Index	S	Name	Type	Description	Objects	Attr
5145h	1	Diaphragm	U8	Diaphragm error signalling		RW
5146h	1	AnalogueCurveError	U8	Error signalling for analogue curve		RW

Index	S	Name	Type	Description	Objects	Attr
5147h	1	Relay1-Type	U16	Relay-Type (0-warning,1-error, 2-warn.+error, 3-warn. +error+stop, 4-stop, 5-clock)		RW
5148h	1	Relay2-Type	U16	Relay-Type (0-warning,1-error, 2-warn.+error, 3-warn. +error+stop, 4-stop, 5-clock)		RW
5149h	1	Relay1-Polarity	U16	Relay polarity (0-attracting(NO), 1-falling off (NC))		RW
514Ah	1	Relay2-Polarity	U16	Relay polarity (0-attracting(NO), 1-falling off (NC))		RW
514Bh	1	Analogue-Out-Range	U16	Analogue output range (0: 0-20mA,1: 4-20mA)		RW
514Ch	1	Analogue-Out-Function	U16	Analogue-Function (0:strokes/min, 1: current metering capacity, 2: Capacity at 20mA)		RW
514Dh	1	Analog-Out-Capacity	U16	Adjustable capacity at 20mA		RW

Index	S	Name	Type	Description	Objects	Attr
514Eh	1	NomFreqStrokesperHour	U16	Nominal metering capacity in strokes/hour		RW
514Fh	1	CalibReset	U16	Calibration reset		RW
5150h	1	BatchQuantity	U32	Set metering quantity		RW
5151h	1	DeviceName	U16	Device name		ro
5152h	1	DeviceLocation	U16	Device installation location		ro
5153h	1	Betriebsdruck	U16	Pressure stages (0: 4 bar, 1: 7 bar; 2: 10 bar, 4: 12 bar)		RW

Index	S	Name	Type	Description	Objects	Attr
5D00h	0	PCO_HighestSubIndex	U8			RO
	1	Name1	String	Pump name		RO
	2	Name2	String			RO
	3	Name3	String			RO
	4	Name4	String			RO
	5	Name5	String			RO
	6	Name6	String			RO
	7	Name7	String			RO
	8	Name8	String			RO
5D01h	0	PCO_HighestSubIndex	U8			RO
	1	Location1	String	Pump installation location		RO
	2	Location 2	String			RO
	3	Location 3	String			RO
	4	Location 4	String			RO
	5	Location 5	String			RO
	6	Location 6	String			RO
	7	Location 7	String			RO
	8	Location 8	String			RO
5042h	1	Identification_LED	U16	0 - off > 0 - Set identification time (LED yellow + red flash for duration) 1 - equivalent to approx. 10 ms	SDO	RW
5FEE	0	CANopenStackRevision	UINT32	ProMinent CANopen-Stack-Revision		RO

2.7.1.4 Device profile area 0x6000-0x9FFF

Index	Sub	Name	Type	Description	Categ.*	Attr
6000h	00h	HighestSubIndex	U32	Failure codes	MANDA	RO
	01h	Hardware failure codes 1	U32		MANDA	RO
	02h	Hardware failure codes 2	U32		MANDA	RO

Index	Sub	Name	Type	Description	Categ.*	Attr
	03h	Software failure codes 1	U32	Bit#0: Software-Fault	MANDA	RO
				Bit#1: SoftwareR-eset		
				Bit#2: Parameter problem		
				Bit#3: Memory resource problem		
				Bit#4: Application failure		
				Bit#5: Failure in control software		
				Bit#6: Failure of operation system software		
				Bit#7: Failure in communication soft-ware		
				Bit#8 to 31 Reserved		
	04h	Software failure codes 2	U32		MANDA	RO
	05h	Mechanics failure codes 1	U32		MANDA	RO
	06h	Mechanics failure codes 2	U32		MANDA	RO
	07h	Electrics failure codes 1	U32		MANDA	RO
	08h	Electrics failure codes 2	U32		MANDA	RO
	0Dh	Operation failure codes 1	U32		MANDA	RO
	0Eh	Operation failure codes 2	U32		MANDA	RO
	0Fh	Operation failure codes 3	U32		MANDA	RO
	10h	Auxiliary device failure codes 1	U32		MANDA	RO
	11h	Auxiliary device failure codes 2	U32		MANDA	RO
	12h	Auxiliary device failure codes 3	U32		MANDA	RO

Index	Sub	Name	Type	Description	Categ.*	Attr
6001h	00h	HighestSubIndex	U32	Warning codes	MANDA	RO
	01h	Hardware warning codes 1	U32		MANDA	RO
	02h	Hardware warning codes 2	U32		MANDA	RO
	03h	Software warning codes 1	U32	Bit#0: Software-Warning	MANDA	RO
				Bit#1: SoftwareR-eset		
				Bit#2: Parameter problem		
				Bit#3: Memory resource problem		
				Bit#4: Application failure		
				Bit#5: Warning in control software		
				Bit#6: Warning of operation system software		
				Bit#7: Warning in communication software		
				Bit#8 to 31 Reserved		
	04h	Software warning codes 2	U32		MANDA	RO
	05h	Mechanics warning codes 1	U32		MANDA	RO
	06h	Mechanics warning codes 2	U32		MANDA	RO
	07h	Electrics warning codes 1	U32		MANDA	RO
	08h	Electrics warning codes 2	U32		MANDA	RO
	0Dh	Operation warning codes 1	U32		MANDA	RO
	0Eh	Operation warning codes 2	U32		MANDA	RO
	0Fh	Operation warning codes 3	U32		MANDA	RO
	10h	Auxiliary device warning codes 1	U32		MANDA	RO

Index	Sub	Name	Type	Description	Categ.*	Attr
	11h	Auxiliary device warning codes 2	U32		MANDA	RO
	12h	Auxiliary device warning codes 3	U32		MANDA	RO

*

MANDA	mandatory
OPTION	optional
CONDIT	Conditional mandatory

Index	Sub	Name	Type	Description	Categ.*	Attr
6002h	00h	`HighestSubIndex`	U32	Alarm codes	MANDA	RO
	01h	Hardware alarm codes 1	U32		MANDA	RO
	02h	Hardware alarm codes 2	U32		MANDA	RO
	03h	Software alarm codes 1	U32	Bit#0: Software-Fault	MANDA	RO
				Bit#1: SoftwareR-eset		
				Bit#2: Parameter problem		
				Bit#3: Memory resource problem		
				Bit#4: Application failure		
				Bit#5: Failure in control software		
				Bit#6: Failure of operation system software		
				Bit#7: Failure in communication soft-ware		
				Bit#8 to 31 Reserved		
	04h	Software alarm codes 2	U32		MANDA	RO
	05h	Mechanics alarm codes 1	U32		MANDA	RO
	06h	Mechanics alarm codes 2	U32		MANDA	RO
	07h07	Electrics alarm codes 1	U32		MANDA	RO

Index	Sub	Name	Type	Description	Categ.*	Attr
	08h	Electrics alarm codes 2	U32		MANDA	RO
	0Dh	Operation alarm codes 1	U32		MANDA	RO
	0Eh	Operation alarm codes 2	U32		MANDA	RO
	0Fh	Operation alarm codes 3	U32		MANDA	RO
	10h	Auxiliary device alarm codes 1	U32		MANDA	RO
	11h	Auxiliary device alarm codes 2	U32		MANDA	RO
	12h	Auxiliary device alarm codes 3	U32		MANDA	RO

Index	Sub	Name	Type	Description	Categ.*	Attr
6003h	00h	`HighestSubIndex`	U32	Specific physical units	MANDA	RO
	01h	Physical unit pressure	U32	Standard: bar 0x004E0000, gal (AE)	MANDA	RW
6005h	00h	`HighestSubIndex`		GenericPump control	MANDA	
	01h	Generic pump commands	U8	Bit#0: Pump operation: off=0 / on=1	MANDA	RW
				Bit#1: ResetFault: No reset=0 / Reset of fault=1		
				Bit#2: RemoteAccessReq: No remote=0; Remote access=1		
				Bit#3 to 7 Reserved		
6007h	00h	`HighestSubIndex`		Identification	MANDA	RO
	01h	ManufacturerID	String		MANDA	RO
	02h	DeviceType	String		MANDA	RO
	03h	ProfileRevision	String		MANDA	RO

Index	Sub	Name	Type	Description	Categ.*	Attr
6026h	00h	`HighestSubIndex`		Error notification control	MANDA	CO
	02h	Name	String		MANDA	RW
	03h	Class	String		MANDA	RW

Index	Sub	Name	Type	Description	Categ.*	Attr
	07h	NotificationCode	U16		OPTION	RW
6027h	00h	HighestSubIndex		Error notification status	MANDA	
	01h	Status	U8		MANDA	RO

*

MANDA	mandatory
OPTION	optional
CONDIT	Conditional mandatory

2.7.1.5 Alarm action area for measurement devices (404)

Index	Sub	Name	Type	Description	Categ.	Attr
6509h	1	AI1_action=1 warn,=3 err	U8	Level min error		RW
6519h	1	AI2_action =0 inactive	U8	Level min warning		RW
6529h	1	AI3_action	U8	Batch error		RW
6539h	1	AI4_action	U8	Cal warning		RW
6549h	1	AI5_action	U8	Sys error		RW
6559h	1	AI6_action	U8	Not bus		RW
6569h	1	AI7_action	U8	add2		RW
6579h	1	AI8_action	U8	add3		RW
6600	1	AI_state0_7	U8	0=no error, 1=error (DLT/ Sigma/DF3)		RW

2.7.2 EMERGENCY

Emergency Object Data:

Byte	0	1	2	3	4	5	6	7
Content*	Emergency Error Code*		Error register*	Manufacturer specific Error Field*				

*

Content (1 Byte):	80h+Node-Id
Emergency Error Code (2 Byte):	0x1000 (0x10xx = Generic Error) 0x0000 (0x00xx = No Error)

Error Register (1001h-content) (1 Byte):	0x81 (Bit #0=Generic Error,Bit #7= Manufacturer specific)
Manufacturer specific Error Field (5 Byte):	Byte #3: Component no. (channel) Byte #4: Error type Byte #5: Error class Byte #6: free Byte #7: free

Emergency ErrorCode (2 Byte):	0xFF01 (0xFFxx = Device specific, 0x01 = Sigma b)

Manufacturer specific Error Field (5 Byte):

Byte #3:	Component no. (channel)
Byte #4:	Error type
Byte #5:	Error class
Byte #6:	free
Byte #7:	free

Component no. (channel):

0	-
1	GMXa

Error type (1-99):

- see error table

Error class:

Bit0	Emergency active
Bit1	Error (1) / warning (0)
Bit2	Action: 1 active (horn on) – 0 inactive (horn off)

Error table

Fault	EMCY						
	Emergency ErrorCode	Error Register	Manufacturer specific Error Field				
			Component no.	Error type	Error class	-	-
Level warning	0xFF01	0x81	0x01	0x01	0x01	0x00	0x00

Fault	EMCY						
	Emergency ErrorCode	Error Register	Manufacturer specific Error Field				
			Component no.	Error type	Error class	-	-
Metering monitoring warning	0xFF01	0x81	0x01	0x03	0x01	0x00	0x00
Diaphragm warning	0xFF01	0x81	0x01	0x04	0x01	0x00	0x00
Stroke length warning	0xFF01	0x81	0x01	0x05	0x01	0x00	0x00
Overload warning	0xFF01	0x81	0x01	0x06	0x01	0x00	0x00
Temperature warning	0x4201	0x09	0x01	0x07	0x01	0x00	0x00
Level error	0xFF01	0x81	0x01	0x21	0x02	0x00	0x00
Storage tank overflow	0xFF01	0x81	0x01	0x22	0x02	0x00	0x00
Control signal < 4mA	0xFF01	0x81	0x01	0x23	0x02	0x00	0x00
Control signal > 20mA	0xFF01	0x81	0x01	0x24	0x02	0x00	0x00
Defective stroke metering	0xFF01	0x81	0x01	0x25	0x02	0x00	0x00
Diaphragm rupture	0xFF01	0x81	0x01	0x26	0x02	0x00	0x00
Stroke length adjusted	0xFF01	0x81	0x01	0x27	0x02	0x00	0x00
System error	0xFF01	0x81	0x01	0x2A	0x02	0x00	0x00
Module communication	0x8101	0x11	0x01	0x2C	0x02	0x00	0x00
Module missing	0x8101	0x11	0x01	0x2D	0x02	0x00	0x00

Emergency ErrorCodes from stack

	Emergency ErrorCode	
#define ERRCODE_COMM_ERROR	0x8100	communication error
#define ERRCODE_CAN_OVERRUN	0x8110	CAN overrun
#define ERRCODE_CAN_PASSIVE	0x8120	CAN in error passive
#define ERRCODE_HB_ERROR	0x8130	HB or life guard
#define ERRCODE_CAN_RECOVER_BOFF	0x8140	CAN recoverd from bus-off
#define ERRCODE_BAD_PDOPARA	0x8210	PDO not processed due the length
#define ERRCODE_BAD_PDOLEN	0x8220	PDO length exceeded

2.7.3 Object explanations

DeviceState [Index 0x2A10, Subindex 0x00]

The "DeviceState" object contains actual operating conditions and the pump's existing errors. 'DeviceState' can only be read.

DeviceState BitValues

Bit positions	Meaning
15 (MSB)	Manual / bus operation
14	Pause
13	-
12	Auxiliary
11	Operating mode: 1. continuous
10	Operating mode: 2. batch operation
9	Operating mode: 3. external contact
8	Operating mode: 4. analogue input
7	Stop
6	Internal error
5	Warning (e.g. container filling level)
4	Suction active
3	Lowerer (only in ProMinent systems)
2	Calibration invalid
1	Memory metering
0 (LSB)	No remote operation possible

DeviceControl [Index 0x2A11, Subindex 0x00]

The object 'DeviceControl' is used to specify the operating mode more precisely.

DeviceControl BitValues

Bit positions	Meaning
7 (MSB)	Must be set to 0
6	Reset
5	Must be set to 0
4	-
3	Calibration completed
2	Must be set to 0
1	Batch memory active
0 (LSB)	Must be set to 0

If Bit 6 (RESET) is set to ‘1’, the pump is stopped (DeviceMode = 0x00), existing errors are deleted and the batch memory is set to 0.

DeviceMode [Index 0x2A12, Subindex 0x00]

The object 'DeviceMode' is used to configure CANopen operating mode of the pump.

DeviceMode BitValues

Bit positions	Meaning
7 (MSB)	Must be set to 0
6	Must be set to 0
5	Must be set to 0
4	Must be set to 0
3	Must be set to 0
2	Must be set to 0
1	Continuous operation [0], batch operation [1]
0 (LSB)	Stop [0] / Start [1]

		Value of 'DeviceMode'
a)	Stop	0x00
b)	Continuous operation	0x01
c)	Batch operation	0x02

2.7.4 Changing the CANopen node address (node ID)

The CANopen node address can be changed as follows:

Change via the object list using Standard SDO traffic.
The object list index 3F40h, subindex 1 can be used to read the currently configured node address or to configure a new node address.
The permitted range for the node address is 1..127. The standard node address is 119.
The data type of this entry is UNSIGNED SHORT.

1. To change the node address, the new address is written to the Index 3F40h, subindex 1.

CAN message for writing the new node address 55:

ID	DLC	Byte 1	Byte 2	Byte 3	Byte 4	Byte 5	Byte 6	Byte 7	Byte 8
600h + Node ID	8	CMD = 2Bh	40h	3Fh	01h	37h	00h	X	X
			Index 3F40h		Sindex 1	Node ID 0037h			

2. The writing of the signature "save" to index 1010h, subindex 05 causes the saving of the new node address to the non-volatile memory.

CAN message for saving the new node address 250kBit/s:

ID	DLC	Byte 1	Byte 2	Byte 3	Byte 4	Byte 5	Byte 6	Byte 7	Byte 8
600h + Node ID	8	CMD = 23h	10h	10Fh	05h	73h	61h	76h	65h
			Index 1010h		Sindex 5		“save”		

3. When the device is next started, the changed baud rate becomes effective. A restart of the device is also possible via the NMT command "ResetNode".

2.7.5 Transfer rate (baud rate)

As supplied, the device is set to the baud rate 125 kBit/s. This is the ProMinent default baud rate.

2.7.6 Calibration, explanations

The pump is precalibrated. The metering volumes can be recalibrated if required.

2.7.7 Firmware update

The firmware cannot be updated via the CAN-Bus.

2.7.8 Data storage

Configuration data (e.g. the determined calibration data) are saved in a power fail-safe memory.

2.7.9 Received directives / standards

Fulfilled CAN standards and specifications

In respect of the hardware, the device complies with the harmonised CAN specification 2.0 (ISO99-1, ISO99-2). This includes the CAN protocol (ISO 11898-1) and details on the physical layer in compliance with ISO 11898-2 (high speed CAN up to 1 Mbit/sec) and ISO 11898-3 (low speed CAN up to 125 kBit/sec).

The unit complies with the CAN-Open specification CIA-DS401 that forms the basis of the European standard EN50325-4 and

also complies with the controller device profile CiA-404.

3 Supplementary Operating Instructions PROFIBUS®

3.1 Prerequisites

Personnel must be familiar with the contents of the "Operating Instructions for Solenoid Metering Pump gamma /X, GMXa"!

The pump must have the identity code feature "Control types": "R" PROFIBUS®DP interface M 12". The menu item *'Fieldbus'* is then available in the operating menu. (When *'Fieldbus* ➔ *active'* is set, *'Settings* ➔ *PROFIBUS'* also appears in the operating menu.)

3.2 Adjusting the pump

3.2.1 General

The pump with PROFIBUS® functionality is adjusted in the same way as the standard pump, with the addition of the bus functionality.

In the event of a pause longer than 60 s, the adjustment process is cancelled.

Using the connected PROFIBUS® module, the PROFIBUS® pump represents a device with slave functionality in conformity with DP-V1. This means that the payload is transferred both cyclically and acyclically.

3.2.2 Activating / deactivating PROFIBUS®

In order for the pump to be controlled using the PROFIBUS®, *'Fieldbus'* must be set to *'Active'* in the operating menu.

1. To access the *'Menu'*: press *[Menu]*.
   ⇨ The cursor immediately points to *'Information'*.
2. To switch from *'Information'* to *'Fieldbus'*: turn the *[Clickwheel]* and press.
3. To switch the *'Fieldbus'* to *'Inactive / active'*: turn the *[Clickwheel]* and press.
4. To switch from *'Inactive'* to *'Active'*, turn the *[Clickwheel]* and press.
   ⇨ The pump saves the *'Active'* setting.
   The *'Settings* ➔ *PROFIBUS'* menu also appears.
   The pump is in "stop" mode. To start controlling it, press the *[Stop/Start]* key. Give the Start command using the BUS.

While the PROFIBUS® is *'Active'*, all external inputs such as level monitoring, metering monitoring and external control (pause, contact input, analogue input) will function. They lead to the expected reactions as in the case of the pump without PROFIBUS® functionality - see pump operating instructions. The pump sends corresponding information over the PROFIBUS® to the master (PCL, PC etc.).

The gamma/ X, GMXa is set to *'Automatic'* metering type at the factory.

Even if the fieldbus is set to inactive, the master is able to read-access the pump data defined in its GSD file.

If the PROFIBUS® is set to *'Inactive'*, the settings for the operating mode previously selected are reloaded.

If the pump is switched to another operating mode, it stops and can only be restarted using the *[Stop/Start]* key.

3.2.3 Setting the slave address

3.2.3.1 using the *'Bus address'*

If the master in the PROFIBUS® segment assigns the slave addresses, manual setting of the slave address is cancelled.

The address is set to "120" for the gamma/ X GMXa.

1. To access the *'Menu'*: press the *[Menu]* key
   ⇨ The cursor immediately points to *'Information'*.
2. To switch from *'Settings'* to *'Fieldbus'*: turn the *[Clickwheel]* and press.
   ⇨ The cursor immediately points to *'Operating mode'*.
3. To switch from *'Operating mode'* to *'PROFIBUS'*: turn the *[Clickwheel]* and press.
   ⇨ The menu *'Bus address'* appears.

The PROFIBUS® address must always be entered as 3 digits (addresses from "002" to "125"):

1. 1. Option: Turn the *[Clickwheel]* until the desired value is reached and then press the *[Clickwheel]* .
2. 2. Option: Press the *[Priming]* key to change to digit-by-digit setting. Set the number using the *[Clickwheel]* and save using the *[Priming]* key. The cursor moves to the next number, and so on .

3.2.3.2 About *'Pump type'*

In this case you only need to make a setting if you want to use the gamma/ L data profile instead of gamma/ X.

1. In accordance with chap. jump to *'Pump type'* .
2. Select, for example, *'GALa'* as the pump type.
   ⇨ The pump loads the data profile for the gamma/ L, GALa pump.

3.3 Special features in PROFIBUS® mode

3.3.1 General

In PROFIBUS® mode, the pump cannot be manually set or programmed! To do this, set the PROFIBUS® to 'Inactive' .

- Using the *[Clickwheel]* it is possible to switch between the continuous displays at any time as in the other operating modes. This has no effect on the operating of the pump.
- When PROFIBUS® mode is selected, the settings from the last operating mode without PROFIBUS® are applied. **Settings made using PROFIBUS® are, however, not saved!** These only apply as long as the pump is linked to the PROFIBUS® . Only the *'stroke counter'* (total number of strokes) and the *'volume counter'* (total number of litres) continue to be counted and saved.
- If the pump is set to PROFIBUS® mode, it stops. It can be controlled again by pressing the STOP START *[Stop/Start]* key. Give the Start command using the BUS.

3.3.2 Display

In running PROFIBUS® mode there are further identifiers in the operating indicator.

The current identifier can be found in the "Controls" chapter in the "Solenoid metering pump gamma/ X, GMXa Operating Instructions".

PROFI BUS Stop PROFIBUS®: The pump has been stopped using the PROFIBUS®. The master has sent the pump a corresponding telegram.

⇌ Connection error: If the pump loses its connection with the PROFIBUS® (as soon as, for example, the BUS cable is removed or the bus master becomes inoperative), the ϟ fault symbol and the ⇌ symbol appear.

•• Fault module: If the pump loses its connection with the BUS module (as soon as, for example, the BUS module is removed or if communication is interrupted for other reasons between the BUS module and the pump), the error symbol ϟ and the •• symbol appear.

3.3.3 LEDs on the PROFIBUS® module

LED 1 (left) - module operating status

Signal	Cause
Off	The module has no supply voltage or connection.
Green	The module and the master are exchanging information.
Green flashing	The module has been initialised.
Red flashing	Error in pump parametrisation
Red flashing, double	Error in PROFIBUS configuration

LED 2 (right) - module status

Signal	Cause
Off	The module has not been initialised.
Green	The module has been initialised.
Green flashing	The module has been initialised and there are diagnostic messages.
Red	Serious exception error

3.3.4 Use metering monitor

In order to use the metering monitor in PROFIBUS® mode, the "Metering monitor" socket must be used. The pump then sends *'Available'* for the "Flow" status bit. The metering monitor can be switched on and off using the PROFIBUS® using the *'Metering monitor'* and *'FlowControl'* parameters.

If the metering monitor is set to *'Active'*, in the event of a problem it only gives a warning with gamma/ L, GALa - the gamma/ X, GMXa can give a warning as a problem or a fault.

3.4 Installation

Bus installation

All devices that are members of the bus system, must be connected in a line. There are up to 32 possible positions (master, slaves, repeaters).

At both the beginning and end of the cable, the bus must be terminated with a terminating resistance.

Plugs and cable

For the PROFIBUS® cable, use a shielded, twisted-pair cable in conformity with EN 50170 (cable type A).

Use of screening which is earthed at one end prevents low-frequency ground loops. Shielding earthed at one end has no effect in combating HF magnetic pick-up. Shielding earthed at both ends as well as twisted conductors work to counter magnetic HF pick-up, but have no effect against electrical HF pick-up.

For PROFIBUS®, it is recommended that a bilateral, low-inductance (i.e. large area and low-impedance) connection is established with the protective earth.

The overall length of the bus cabling without repeaters varies according to the desired data transmission rate:

Data transmission rate and length of the bus cabling

Data transmission rate	Max. length of bus cabling
kBit/s	m
12000	100
6000	100
3000	100
1500	200
500	400
187.5	1000
93.75	1200
19.2	1200
9.6	1200

The PROFIBUS® module has two M12 industry sockets for connecting with the PROFIBUS®cable. The pin configuration complies with the PROFIBUS® standard - see below - which means that commercially available bus plugs may be used. Please note that cable connections made with these plugs are generally only contact and moisture proof to IP 20!

Note for achieving IP 65 protection

Installation to IP 65 contact and moisture proofing level is possible, since the M12 industry socket of the PROFIBUS® module allows it. Accordingly, the PROFIBUS® cable must be provided with IP 65 class M12 industrial connectors.

CAUTION!

- Protection level IP 65 applies only to a plug/socket combination that has been screwed together!
- In ambient conditions requiring contact and moisture proofing up to IP 65, cables with moulded M12 industry plugs must be used.
- Protection level IP 65 applies only to an unwired pump (with PROFIBUS®module), if IP 65-capable covers are placed over the M12 industry sockets! The cover included in the delivery does not guarantee chemical resistance.

Terminating resistance

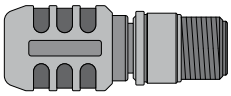

P_DE_0079_SW

If the pump is the last bus device connected to the PROFIBUS® cable, it must be connected completely as a termination using the PROFIBUS®terminating resistance, pluggable (order no. 1036622) see EN 50170. The PROFIBUS® terminating resistance has IP 65 class contact and moisture protection.

3.5 Operation

3.5.1 General

Using the connected PROFIBUS® module, the PROFIBUS® pump represents a device with slave functionality in conformity with DP-V1. This means that the payload is transferred both cyclically and acyclically.

3.5.2 GSD file

The GSD file must be used for configuring the master. It describes all of the features of the pump in PROFIBUS® mode (keywords, diagnosis, modules, slots). The GSD file can be downloaded from the PROFIBUS® website and from the ProMinent website. The file-name is clearly indicated: `GMXA0F4E.GSD`.

3.5.3 Data objects gamma/ X, GMXa

Status and control

Module/slot	Index	Name	Module name	Diag. number	Identi-fication (hex)	Type	Data-flow *	Description		
								bit	Name	Function
1	1	State	**Status**	1	40.83	u32	R	0	Service	There are service requests
								1	Mes-sages	There are reports
								2	Mode	00 – stop 03 – contact
								3		01 – manual 04 – analogue
								4		02 – batch
								5	Fault	There are faults - see "Fault"
								6	Warn-ings	There are warn-ings - see "Warnings"
								7	Hand stop	Pump has been stopped man-ually

Module/slot	Index	Name	Module name	Diag. number	Identification (hex)	Type	Dataflow *	Description		
								bit	Name	Function
								8	Stop	Pump has stopped
								9	Priming	Pump is in priming mode (higher-level function)
								10	Auxiliary	Pump is in auxiliary mode (higher-level function)
								11	Pause	Pump has been switched to *'Pause'* status (higher-level function)
								12	Module	Fieldbus active
								13	Flow	Metering monitor is activated
								14	Batch-Mem.	Batch memory is activated
								15	Calibrated	Pump is calibrated
								16	-	-
								17	-	-
								18	-	-
								19	Diaphragm rupture	Diaphragm rupture indicator is installed
								20	Concentration	Concentration calculation is activated
								21	-	-
								22	Cavitation	Priming occurred during cavitation
								23	Airlock	Air in dosing-head
								24	Overpressure	Excessive back pressure
								25	Underpressure	Low back pressure
								26	Bleed valve	Pump vented

Module/slot	Index	Name	Module name	Diag. number	Identification (hex)	Type	Dataflow *	Description		
								bit	Name	Function
								27	-	-
								28	-	-
								29	-	-
								30	-	-
								31	-	-
2	1	Start / Stop	Control	2	80.81	u8	S	Complies with *[Start/Stop]* key; If Start / Stop = 0, then the pump is stopped		
	2	Reset		3		u8		If the Reset value is switched from 1 to 0, the internal pump memory is erased (e.g. in the event of a batch metering) and - as far as possible - the existing faults deleted		

* R = read, W = write

Mode, flow rate, max. flow rate, batch, contact, concentration, metering monitor

Module/slot	Index	Name	Module name	Diag. number	Identification (hex)	Type	Dataflow *	Description		
3	1	Mode	Mode	4.5	C0,80, 80	u8	R, W	Value	Name	Description
								0.16	Stop	Pump is ready but not metering.
								1	Manual	Pump is metering continuously with the set volumes
								2	Batch	When triggered, the pump is metering the volumes set in the batch code
								3	Contact	Pump meters volumes in the predefined time
								4	Analogue	Pump is metering in accordance with the analogue signal and the analogue mode set at the pump.
								17	Manual (concentr.)	Manual in concentration mode

Module/slot	Index	Name	Module name	Diag. number	Identification (hex)	Type	Data-flow *	Description		
								18	Batch (concentr.)	Batch in concentration mode
								19	Contact (concentr.)	Contact in concentration mode
								20	Analogue (concentr.)	Analogue in concentration mode
4	1	nominal flow rate	**Flow rate**	6	C0,83, 83	f32	S	Metering capacity setpoint in litres / hour		
	2	Actual flow rate		7		f32	R	Metering capacity actual value		
5	1	max. flow rate	**Max. flow rate**	8	40.83	f32	R	Maximum metering capacity in litres / hour		
6	1	Batch volume	**Batch**	9	C0,83, 88	f32	S	Batch metering volumes		
	2	Batch time		10		u16		Time in which the batch should be metered		
	3	Batch start		11		u8		If the value changes from 1 to 0, a batch metering is activated in batch mode. (Batches may also be activated via contact input.)		
	4	Batch memory		12		u8		If "Batch Memory" is activated and a new batch is activated during a batch metering already in progress, the remaining metering volumes are increased by that of the new batch. If the "Batch Memory" is not activated, the remaining volume is deleted and the new batch started.		
	5	Remaining volume		13		f32	R	The remaining volumes to be metered in batch mode		
7	1	Contact volume	**Contact**	14	80.84	f32	S	Volumes that are metered per contact		
	2	Contact memory		14		u8		- see "Batch Memory"		
8	1	Concentration rate	**Concentration**	15	C0,83, 83	f32	S	Concentration setting setpoint (only in *'Concentration'* operating mode)		

Module/slot	Index	Name	Module name	Diag. number	Identification (hex)	Type	Dataflow *	Description
	2	Actual concentration		16		f32	R	Concentration setting actual value (only in *'Concentration'* operating mode)
9	1	Metering monitor	**Metering Monitor**	17	80.80	u8	S	If metering monitoring is installed, it can be activated by yourself (1). Deactivate is 0.

* R = read, W = write

Error / Warning

Module/slot	Index	Name	Module name	Diag. number	Identification (hex)	Type	Dataflow *	Description		
10	1	Error	**Error / Warning**	18	40.85	u32	R	**Bit**	**Name**	**Function**
								0	Minimum	Metering medium level is too low
								1	Batch	Too many metering strokes: > 100 000
								2	Analog < 4mA	Analogue current is less than 4 mA
								3	Analog > 23mA	Analogue current is greater than 23 mA
								4	Dosing monitor	Fault metering monitoring
								5	Diaphragm rupture	Dosing head diaphragm broken
								6	Airlock	Air in dosing-head
								7	Overpressure	Overpressure (feed chemical)
								8	-	
								9	Cavitation	
								10	Low pressure	Pressure too low (feed chemical)
								11	Change stroke length	The stroke length has been adjusted in locked state

Module/slot	Index	Name	Module name	Diag. number	Identification (hex)	Type	Dataflow *	Description		
								12	Bleed valve	Automatic ventilation is not possible
								13	Bus fault	Bus fault reported by module
								14	System fault	System components defect - see display
								15	Module fault	Fault in module handling
								16	-	
								17	-	
								18	-	
								19	-	
								20	-	
								21	-	
								22	-	
								23	-	
								24	-	
								25	-	
								26	-	
								27	-	
								28	-	
								29	-	
								30	-	
								31	-	
	2	Warnings		19		u16		**Bit**	**Name**	**Function**
								0	Minimum	Metering liquid is low
								1	Calibration	-
								2	Dosing monitor	Metering monitoring warning
								3	Diaphragm rupture	Defective diaphragm in the dosing head
								4	Airlock	Air in dosing-head
								5	-	
								6	Cavitation	

Module/slot	Index	Name	Module name	Diag. number	Identification (hex)	Type	Dataflow *	Description		
								7	Over-pressure	Overpressure in hydraulics
								8	Low pressure	Pressure too low in hydraulics
								9	-	
								10	-	
								11	-	
								12	-	
								13	-	
								14	-	
								15	-	

* R = read, W = write

Strokes / quantity and individual data

Module/slot	Index	Name	Module name	Diag. number	Identification (hex)	Type	Dataflow *	Description
11	1	Reset stroke counter	**Strokes /quantity**	20	C0,81, C5	u8	S	If the value changes from 1 to 0, the *'Stroke counter'* (total number of strokes) is reset
	2	Reset quantity counter		21		u8		If the value changes from 1 to 0, the *'Volume counter'* (total number of litres) is reset
	3	Stroke counter		22		u32	R	Count the number of strokes - since the last reset (*'Stroke counter'*)
	4	Quantity counter		23		f32		Count the metering volumes in litres - since the last reset (*'Volume counter'*)
	5	Litres per stroke		24		f32		Litres per stroke
acyclical only / 12	1	Identity code		25		s32		Pump identity code
	2	Serial number		26		s16		Pump serial number
	3	Name		27		s32		Pump name (freely editable)
	4	Installation location		28		s32		Installation site (freely editable)

* R = read, W = write

Diagnostics frame

In conformity with PROFIBUS® standard, the device makes the *[Get_Sl_Diag]* service available. The diagnostics data comprise standard diagnostics information (6-Bytes according to PROFIBUS® standard) and any possible diagnostics data specific to the device. A maximum of 63 bytes can be inserted for the device-specific diagnostics data. The first 4 bytes in the PROFIBUS® standard are specified from this:

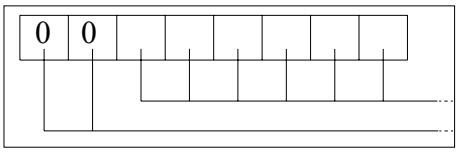

Encode the byte `sign_len` as follows:

Length of the DU status including the header byte: 04..63

Flags ‘device-related diagnostics’: 00 constant

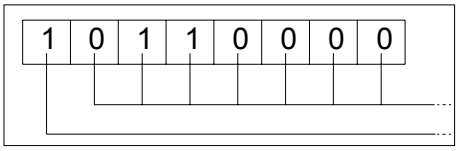

Encode the byte `status_type` as follows:

Status type: 48 (manufacturer specific)

Flags ‘Status’: 1 constant

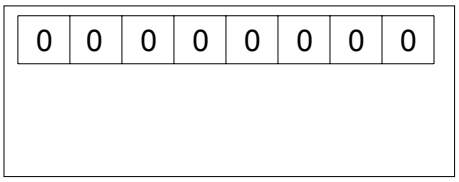

Encode the byte `slot_number` as follows:

Slot number: 0 (because only slot 0 is being used)

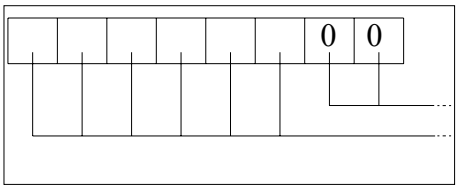

Encode the byte `specifier` as follows:

Status specification: 00 constant

Reserved

59 bytes subsequently remain freely available (user_data):

User_Data

Order Number	Name	Explanation
1	Status	- see "data objects GMXa" table
11	Start/Stop	Complies with Start/Stop switch; If Start/Stop = 0, then the pump is stopped
12	Reset	Delete internal pump memory and pending faults by changing "1" to "0"
21	Setpoint operating mode	- see "data objects GMXa" table
22	Actual operating mode	- see "data objects GMXa" table
31	Setpoint metering capacity	Setpoint metering capacity in [L/h]

Order Number	Name	Explanation
32	Actual metering capacity	Actual value metering capacity in [L/h]
41	Max. metering capacity	Maximum metering capacity in [L/h]
51	Volumes per contact "batch mode"	Volumes to be delivered in contact in batch mode
52	Metering time batch mode	Time in which the batch volumes are to be delivered
53	Batch start	Start batch metering by changing "1" to "0"
54	Batch memory	For "1", the volumes to be delivered are added up for each additional batch contact; for "0", the remaining volumes are deleted and a new batch process is started
55	Remaining volumes batch mode	Remaining volumes to be metered in batch mode
61	Volumes per contact "contact mode"	Volumes to be delivered in contact in contact mode
62	Contact memory	For "1", the volumes to be delivered are added up for each additional batch contact; for "0", the remaining volumes are deleted and a new contact process is started (analogous to "batch memory")
71	Setpoint final concentration	Desired final concentration in concentration mode
72	Actual value final concentration	current final concentration in concentration mode
81	Dosing monitor	Activate/deactivate metering monitoring:
		0 – deactivated
		1 – activated / warning
		3 – activated / fault
91	Fault	- see "data objects GMXa" table
92	Warnings	- see "data objects GMXa" table
101	Reset stroke counter	Reset stroke counter by changing "1" to "0"
102	Reset metering quantity counter	Reset metering volume counter by changing "1" to "0"
103	Deletable stroke counter	Number of strokes since the last reset
104	Deletable metering quantity counter	Totalled metering volumes since the last reset
105	Litres per stroke	Litres per stroke
111	Identity code	Pump identity code

Order Number	Name	Explanation
112	Serial number	Pump serial number
113	Pump name	Pump name, freely determinable
114	Installation site	Installation site, freely determinable

3.5.4 Data objects gamma/ L, GALa

So that the pump can participate in the cyclic data transfer, the initial parameters must be transferred from the master. To do this only standard parametrisation is necessary; there are no application-specific parameters.

Please note: Data are stored in the "Big-Endian" format! This means that the byte with the highest value bits is initially stored at the memory location with the lowest address:

Example using "number of strokes"- see "data from pump"

The pump stroke rate is stored as Integer32 type at the offset addresses +17 to +20. Bytes are stored in this sequence:

Name	Type	Off.	Byte	Bits
Number of strokes	Integer32	17	0	24 ... 31
		18	1	16 ... 23
		19	2	8 … 15
		20	3	0 … 7

Communication takes place in cyclic data traffic.

The cyclic data frame comprises:

Data on the pump

Start byte	Length	Data type	Name	Explanation
1	1	Byte	StartStop	1=on, 0=deactivation of pump function
2	1	Byte	FlowControl	1=on-, 0=deactivation of metering monitoring (option)
3	1	Byte	StartBatch	A batch is started in "Batch" operating mode when 0 is changed to 1

Start byte	Length	Data type	Name	Explanation
4	1	Byte	BatchMemory	1=on, 0=deactivation of saving function for batches and external metering
5	1	Byte	Reset	Delete faults and basic setting by changing 0 to 1
6	1	Byte	ClearCount	Delete internal stroke and volume counter by ≠ 0
7	1	Unsigned8	SetpointOperation	Operating mode 0=continuous; 1=Batch; 2=External contact; 3=Analogue
8	2	Unsigned16	SetpointFactor	Batch size in batch metering operating mode transmission ratio *100 in "external contact" operating mode (range 0...32767)
10	2	Unsigned16	SetpointMetfreq	Metering frequency in "continual" operating mode max. metering frequency in "batch" and "ext. contact" operating modes (range 0 ... Max-Freq. (dependent on pump))

Pump data

Start byte	Length	Data type	Name	Explanation
1	2	Unsigned16	Status	- see "Status" table
3	1	Unsigned8	ActualOperation	Operating mode 0=continuous; 1=Batch; 2=External contact; 3=Analogue
4	2	Unsigned16	ActualFactor	Batch size in "batch metering" operating mode Transmission ratio *100 in "external contact" operating mode

Start byte	Length	Data type	Name	Explanation
6	2	Unsigned16	ActualMetFreq	Metering frequency in "continual" operating mode max. metering rate in "batch" and "ext. Contact" operating modes
8	2	Unsigned16	ActualFreq	Actual frequency. The number of strokes actually metered by the pump. In "batch" and ext. contact, the Dosfreq. is displayed
10	1	Unsigned8	Stroke length	Adjusted stroke length in % from end stop
11	2	Unsigned16	Remaining strokes	The number of strokes still to be performed in batch metering in progress
13	1	Unsigned8	Fault	Flags for fault sources - see "Fault" table
14	1	Unsigned8	Warning	Flags for warning sources - see "Warning" table
15	2	Integer16	MaxFreq	Maximum frequency in strokes/min that can be metered
17	4	Integer32	Number of strokes	Number of strokes performed since the last reset
21	4	Floating	LpH	Metering volume in litres (gallons) per stroke
25	4	Floating	Quantity	Metered volume in litres (gallons) since the last reset

Status

Item	Name	Status "0"	Status "1"
2^0	Operating mode	continuous	Charge=1; Contact=2; Analogue=3
2^1	Operating mode	-	-
2^2	Fault	No fault	No fault present

Item	Name	Status "0"	Status "1"
2^3	Warning	No warning	Warning present
2^4	Priming	No priming	Priming
2^5	Auxiliary frequency	Aux. Freq. off	Pump metering with aux. Freq.
2^6	Pause	No pause	Pause externally connected
2^7	Stop	Pump is running	Pump stopped
2^8	Option FlowControl	Not present	Present
2^9	FlowControl	Metering monitoring deactivated	Metering monitoring activated
2^{10}	-	-	-
2^{11}	Dividing factor	1:1	1:100
2^{12}	BatchMemory	Deactivated	Activated
2^{13}	Measuring unit	Litres	Gallons
2^{14}	Calibration	Pump not calibrated	Pump calibrated
2^{15}	Operation	Manual mode	BUS mode

Fault

Item	Fault
2^0	Minimum (storage empty)
2^1	Fault analogue current
2^2	-
2^3	-
2^4	Diaphragm rupture (option)
2^5	Metering monitoring (option)
2^6	Overflow stroke storage
2^7	System fault

Warning

Item	Warning
2^0	Minimum (storage empty)
2^1	Stroke length adjustment beyond tolerance
2^2	Diaphragm rupture (option)
2^3	-
2^4	-
2^5	-

Item	Warning
2^6	-
2^7	-

Diagnostics frame

In conformity with PROFIBUS® standard, the device makes the *[Get_Sl_Diag]* service available. The diagnostics data comprise standard diagnostics information (6-Bytes according to PROFIBUS® standard) and any possible diagnostics data specific to the device. A maximum of 63 bytes can be inserted for the device-specific diagnostics data. The first 4 bytes in the PROFIBUS® standard are specified from this:

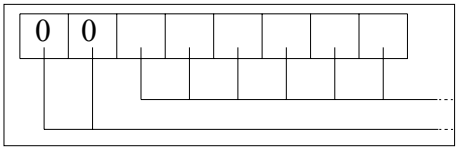

Encode the byte `sign_len` as follows:

Length of the DU status including the header byte: 04..63

Flags ‘device-related diagnostics’: 00 constant

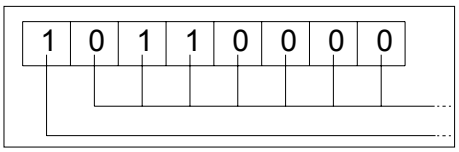

Encode the byte `status_type` as follows:

Status type: 48 (manufacturer specific)

Flags ‘Status’: 1 constant

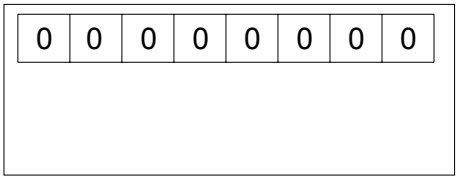

Encode the byte `slot_number` as follows:

Slot number: 0 (because only slot 0 is being used)

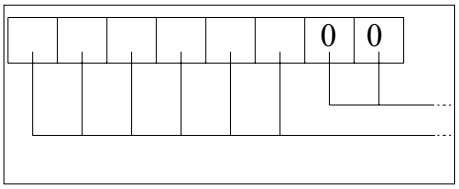

Encode the byte `specifier` as follows:

Status specification: 00 constant

Reserved

59 bytes subsequently remain freely available (user_data):

user_data

Errors are indicated using the user_data fields.

The user_data fields are each combined in blocks of 3 bytes and are interpreted as follows:

1 - Service

2 - Error type

3 - Type of data access (read/write)

Thus up to 19 errors can be signalled.

Encoding user_data

1 service

Index	Name	Explanation
0x01	Status	- see "Status" table
0x02	StartStop	1=on, 0=deactivation of pump function
0x03	FlowControl	1=on-, 0=deactivation of metering monitoring (option)
0x04	StartBatch	A batch is started in "Batch" operating mode when 0 is changed to 1
0x05	BatchMemory	Saving function for batch and external metering
0x06	Reset	Delete faults and basic setting by changing 0 to 1
0x07	ClearCount	Delete internal stroke and volume counter by ≠ 0
0x08	SetpointOperation	Operating mode 0=Continuous; 1= Batch; 2=External contact; 3=Analogue
0x09	ActualOperation	Operating mode 0=continuous; 1= Batch; 2=External contact; 3=Analogue
0x0A	SetpointFactor	Batch size in batch metering operating mode transmission ratio *100 in "external contact" operating mode
0x0B	ActualFactor	Batch size in batch metering operating mode transmission ratio *100 in "external contact" operating mode
0x0C	SetpointMetfrequency	Max metering frequency in "continuous" operating mode max. metering frequency in "batch" operating mode and "ext. Contact" operating modes
0x0D	ActualMetfrequency	Max metering frequency in "continuous" operating mode max. metering frequency in "batch" operating mode and "ext. Contact" operating modes
0x0E	Actualfrequency	Actual frequency. The number of strokes actually metered by the pump. In "batch" and "ext. contact" the metering frequency is displayed

Index	Name	Explanation
0x0F	Stroke length	Adjusted stroke length in % from end stop
0x10	Remaining strokes	The number of strokes still to be performed in batch metering in progress
0x11	Fault	Fault sources flags - see below
0x12	Warning	Warning sources flags - see below
0x13	MaxFrequency	Maximum frequency in strokes / min that can be metered
0x14	Number of strokes	Number of strokes performed since the last reset
0x15	LpH	Number of strokes performed since the last reset
0x16	Quantity	Metered volume in litres (gallons) since the last reset

Value	Meaning	
0x30	OK	-
0x31	Transfer OK	Date outside of permitted range
0x32	Transfer OK	Date protected
0x33	Transfer OK	Date rejected, due to device in manual and not in remote operation
0x34	Transfer OK	Date rejected, due to uninstalled option
0x35	Transfer OK	Service not defined
0x36	Transfer OK	Value cannot be read or changed in current device context
0x37	Transfer OK	No further updating
0x55	Transfer OK	Fuse / UART error
0x56	Error in timeout	-

Data access types

Value	Meaning
0xD3	Write access
0xE5	Read access

ProMinent GmbH
Im Schuhmachergewann 5-11
69123 Heidelberg, Germany
Germany
Telephone: +49 6221 842-0
Fax: +49 6221 842-419
Email: info@prominent.com
Internet: www.prominent.com

Heidelberg, 3, en_GB

© 2015

10.39 - S1-1 – SHARPE BALL VALVE

SHARPE® VALVES
A Division of Smith-Cooper International, LLC

FULL PORT BALL VALVE – MODEL 50M76
INSTALLATION, OPERATION, AND MAINTENANCE INSTRUCTIONS

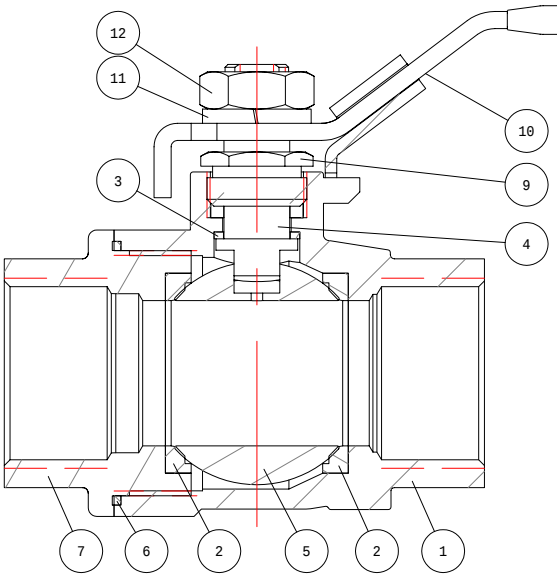

ITEM	PART NAME
1	BODY
2	SEAT
3	STEM THRUST SEAL
4	STEM
5	BALL
6	BODY SEAL
7	CAP
8	STEM PACKING
9	GLAND
10	HANDLE
11	SPRING WASHER
12	HANDLE NUT

INSTALLATION:

These valves may be installed in the pipeline in any orientation or position, using good piping practice. For threaded end valves, use a suitable joint compound or TFE tape on pipe threads for ease of fit-up.

OPERATION:

These are quarter-turn (90° rotation) ball valves, and are normal fitted with a latching lever handle for manual operation. The handles also contain travel stop tabs at the open and closed positions. To open the valve, lift the latch/lock slider up, and turn the handle counterclockwise. To close the valve, lift the latch/lock and turn the handle clockwise.

MAINTENANCE:

----WARNING----
Do not attempt to perform maintenance on valves in pressurized lines.

Stem Seal Adjustment:

If leakage is evident from the stem packing area, tighten the gland nut 1/8 turn. If the leakage persists, repeat tightening. When leakage cannot be corrected by tightening the stem nut, replacement of the valve will be necessary.

SHARPE® VALVES
A Division of Smith-Cooper International, LLC
1260 Garnet Drive, Northlake, Illinois 60164-1028 Phone (877) 774-2773 Fax: (708) 562-0890 www.sharpevalves.com

10.40 - S1-2 – SHARPE 3-PIECE BALL VALVE

SHARPE® VALVES
A Division of Smith-Cooper International, LLC

3-PIECE FULL PORT BALL VALVE – MODELS 53034 & 53036
INSTALLATION, OPERATION, AND MAINTENANCE INSTRUCTIONS

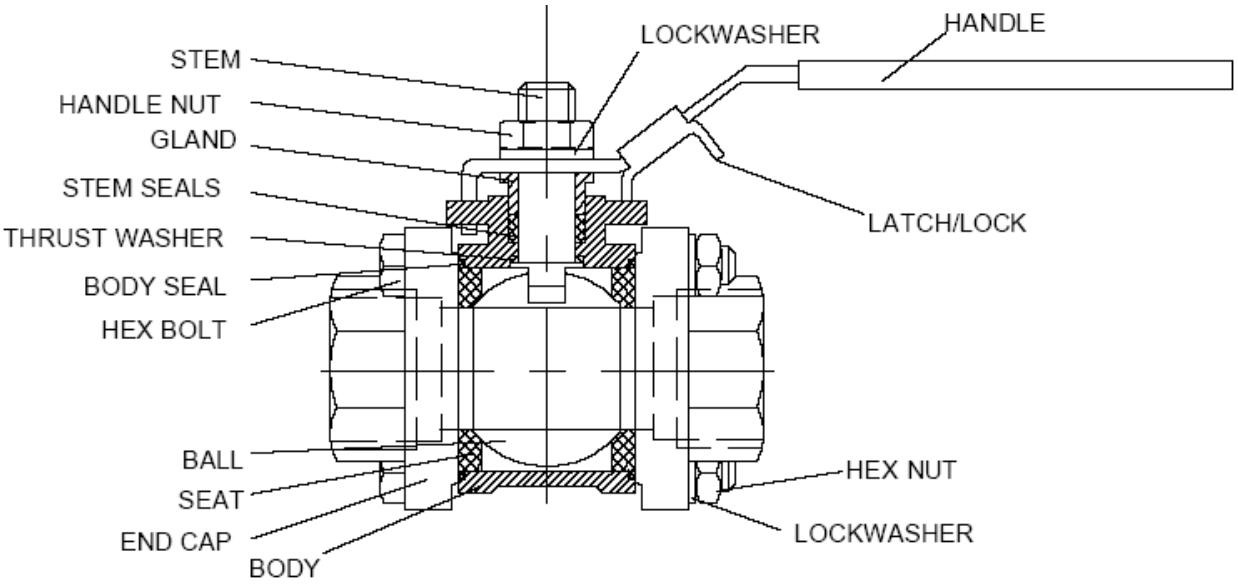

INSTALLATION:

These valves may be installed in the pipeline in any orientation or position, using good piping practice. For threaded end valves, use a suitable joint compound or TFE tape on pipe threads for ease of fit-up.

Welding End Valves:

Socket weld and butt weld end valves must be partially disassembled to prevent heat damage during welding of the soft plastic seats and seals in the valve. Prior to disassembly, the valve may be temporarily fitted in line, and the ends tack-welded to the piping for alignment purposes.

With the valve in the open position, remove the body hex nuts and lock washers, and the body hex bolts. Carefully lift out the center section, making sure that the seats and body seals are held in position. Place the center section in a clean area where it will not be damaged, and complete the welding of the end caps to the piping.

When the welds are cool to the touch, reinstall the center section of the valve between the body end caps. Take care that the seats are in place and have not been damaged. Install the new body seals which were shipped with the valve. Do not re-use old body seals.

Re-install the body bolting, and tighten following the "Assembly" instructions on the following page. A light application of thread lubricant (Never-Seez or equiv.) on bolt threads is recommended.

OPERATION:

These are quarter-turn (90° rotation) ball valves, and are fitted with a latching lever handle for manual operation. The handles also contain travel stop tabs at the open and closed positions. To open the valve, lift the latch/lock slider up, and turn the handle clockwise. To close the valve, lift the latch/lock and turn the handle counterclockwise.

MAINTENANCE:

----WARNING----
Do not attempt to perform maintenance on valves in pressurized lines.

Stem Seal Adjustment:

If leakage is evident from the stem packing area, tighten the packing gland (below the handle) 1/8 turn. If the leakage persists, repeat tightening. If leakage cannot be corrected by tightening the gland, replacement of the stem seals will be necessary.

Seal Replacement:

Turn valve to the open position and remove handle nut, lock washer, and handle. Loosen and remove packing gland from valve body.

Loosen and remove body bolts, and remove body center section assembly, placing it on a suitable work surface. Remove seats and body seals.

Using the handle if necessary, turn ball to the closed position, and remove ball from body with a rolling motion away from the stem. Handle ball with care to avoid damaging the surface.

Push downwards on the top of the stem to slide it through the stem seals, and remove stem from inside body bore. Remove thrust washer from stem, or from body bore if retained in body. Remove stem seals using a packing hook or sharp object.

Sharpe recommends that all soft parts, including seats be replaced with new parts, which can be ordered in kit form.

REASSEMBLY:

Make sure all valve components are clean and undamaged before assembly. A light application of thread lubricant (Never-Seez or equiv.) on bolt and gland threads is recommended.

Install thrust washer on stem, and slide down to shoulder. Insert stem into body and upwards through the stem bore until the shoulder is seated in the bore.

Slide stem seal over stem top, and into stem bore in body. Take care not to damage seal on stem threads. Install packing gland, and tighten finger tight.

Place stem in the “closed” position, and install the ball carefully by rolling the stem tang into the ball slot.

Install seats in the body at both ends, making sure the concave face fits against the ball, and press the body seals into the grooves in the body faces.

Turn ball to the “open” position, and replace between the end caps in line. Slide body hex bolts through end caps and body guide holes, and secure with lock washers and hex nuts. Tighten snugly.

Tighten packing gland to the torque value given in the table below, and replace the handle, lock washer, and handle nut.

Tighten the body bolting to the torque values given in the table below, using a cross or star pattern to tighten evenly.

Table 1 – Assembly Torques

Valve Size	Gland Torque (in-lb)	Body Bolt Torque (in-lb)
¼” – 3/8”	35	50
½”	35	110
¾” – 1”	80	115
1-1/4” – 1-1/2”	115	120
2”	115	125
2-1/2”	250	350
3” – 4”	350	460

SHARPE® VALVES
A Division of Smith-Cooper International, LLC
1260 Garnet Drive, Northlake, Illinois 60164-1028 Phone (877) 774-2773 Fax: (708) 562-0890 www.sharpevalves.com

10.41 - W1 – WIKA PRESSURE GAUGE

Installation and Operating Instructions
for Mechanical Pressure Gauges

Technical Information

Pressure range selection
To insure proper operation and long service life, the proper pressure range should be selected. For applications with constant, steady pressure, the measured pressure should be no more than 75% of the full scale range of the gauge. For applications with fluctuating pressure, the measured pressure should be no more than two-thirds of the full scale range of the gauge.

In general, it is best to choose a range that is roughly 2X the average measured pressure. This gives good over pressure protection and the highest accuracy.

Installation
The pressure gauge should be installed where exposure to heat and vibration are minimal and where the dial can be easily read. It is also important to install the gauge in a location with undisturbed and continuous flow of the pressure medium.

It is recommended that an isolating device, such as a needle valve or gauge cock, be installed between the process and the pressure gauges. This allows the gauge to be taken out of service without interruption of the process.

Connections with tapered threads, such as NPT, should be sealed by using PTFE tape (or an equivalent sealing compound) on the thread. Metric threads such as G1/4A or 1/4BSP should be sealed by using the appropriate sealing washer.

The gauge should be tightened and loosened using the wrench flats on the gauge socket. Never grasp the case to thread the gauge into the pressure system fitting. Doing so may cause irreparable damage to the gauge.

For pressure gauges with flanged connections, care must be taken not to accidentally loosen the bolts that hold the upper and lower housings together.

A pressure gauge should never be removed when it is pressurized. Make sure the pressure system has been fully vented prior to removing a gauge.

Residues from the pressure medium may remain inside the pressure gauge after it has been removed from service. If these residues are hazardous or toxic, take the necessary precautions when handling and storing used gauges.

Isolating devices
The isolating device may be either a pressure gauge cock or a needle valve, depending on operating conditions and requirements.

Pressure gauge cocks
Pressure gauge cocks have three handle positions:

OFF	The pressure medium is blocked and the pressure gauge system is open to the atmosphere.
ON	The pressure gauge is open to the pressure medium.
VENT	The pressure gauge is isolated but the pressure system is vented and the medium can escape into the atmosphere.

Pressure gauge cocks should be installed so that when vented, the pressure medium is directed away from the operator.

Needle valves
Needle valves also isolate the pressure gauge from the pressure medium, but they usually do not have any venting capabilities. Needle valves do have the advantage of restricting the flow of the pressure into the gauge which helps reduce damage by pressure spikes.

Mounting options
If the pressure system or tee-extension cannot support the weight of the instrument, then surface or wall mounting brackets or mounting flanges (front flange or rear flange) should be used.

Vibration protection
If the pressure gauge is exposed to vibration or pulsating pressure or both, then a liquid filled pressure gauge is recommended. The liquid dampens the effects of vibration making the pointer easier to read.

Temperature limits
The pressure gauge should not be used outside of its rated temperature limits as noted on the Data Sheet specific to that gauge. At temperatures above or below these limits, the gauge accuracy will be significantly reduced and the possibility of gauge failure may exist.

Overpressure limits
WIKA gauges are generally designed to withstand up to a 130% overpressure without damage to the pressure system. For applications with overpressure spikes, a snubber or restrictor should be used. Snubbers and restrictors reduce the inlet size of the pressure gauge which causes the pressure to increase or decrease more slowly into the gauge. For applications with periods of constant overpressure, an overpressure protector should be used. The overpressure protector isolates the gauge when the pressure reaches a preset pressure value.

Tee extensions

Tee extensions should have a diameter of at least 0.24 in. (6mm) to avoid clogging from solids in the pressure medium. WIKA recommends that long, horizontal tee extensions be sloped to about 1:15.

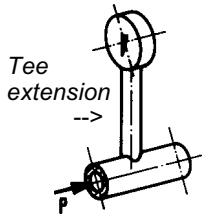

With a gaseous pressure medium, the extension should having a drain plug at its lowest point, while a line with a liquid medium should have an air bleeding valve at its highest point. A filter or separator should be used when the pressure medium contains suspended matter.

If a static head of liquid is acting on the gauge, then this causes a zero offset which affects the reading of the gauge.

The corresponding indication will be lower by the value of Δp if the gauge is mounted above, but higher by the value of Δp if the gauge is mounted below the pressure tapping point.

Pressure gauges in service

Always open isolating devices slowly. Opening them too fast may generate sudden pressure surges that could damage the gauge.

Calibration can be confirmed in larger diameter gauges ($\geq$ 4") by checking the position of the zero point. To do so, close the isolating device and vent the gauge to zero pressure. The pointer must over the zero box ✚. Unless the gauge temperature is significantly higher or lower than 68°F (20°C), a pointer not returning to zero may indicate that the gauge has been seriously damaged.

Storage

The pressure gauge should remain in its original packing until installation.

Storage temperature should not exceed -4°F (-20°C) or 140°F (60°C) unless specified otherwise. Consult the data sheet pertaining to the pressure gauge model.

Pressure gauges removed from service should be protected from dust and humidity, preferably by using the original packing material. Residue from the pressure medium may remain in the gauge and is susceptible to temperature influences (i.e. freezing). This should be considered when storing the removed pressure gauge.

Pressure gauge safety

Pressure media such as:

- Oxygen
- Acetylene
- Flammable gases or liquids
- Toxic gases or liquids
- Steam
- Ammonia and other refrigerants

as well as portable or stationary pressure systems like:

- Air compressors
- Welding equipment
- Pressure vessels and boilers
- Life support equipment

may require pressure gauges that have been tested and/or certified to national standards and/or local safety codes. Your local WIKA representative will be able to assist you in selecting the proper gauge model.

Standards for Pressure Gauges

U.S. & Canadian Standards are set forth by The American Society of Mechanical Engineers, which publishes pressure gauge specifications in their document ASME B40.1. This document specifies standard pressure gauge types, sizes, materials, ranges, and accuracies. Copies of this standard can be purchased directly from ASME:

ASME
22 Law Drive, Box 2900
Fairfield, NJ 07007-2900
1-800-THE-ASME or (973) 882-1167
Fax: (973) 882-1717
E-mail: infocentral@asme.org

European Standards are developed and published by the European Committee for Standardization (CEN) and replace the individual standards formerly used in each European country (such as DIN standards in Germany). Copies of these standards can be obtained through:

Comité Européen de Normalisation (CEN)
Central Secretariat
rue de Stassart 36
B-1050 Brussels
Belgium

Pressure gauge accessories

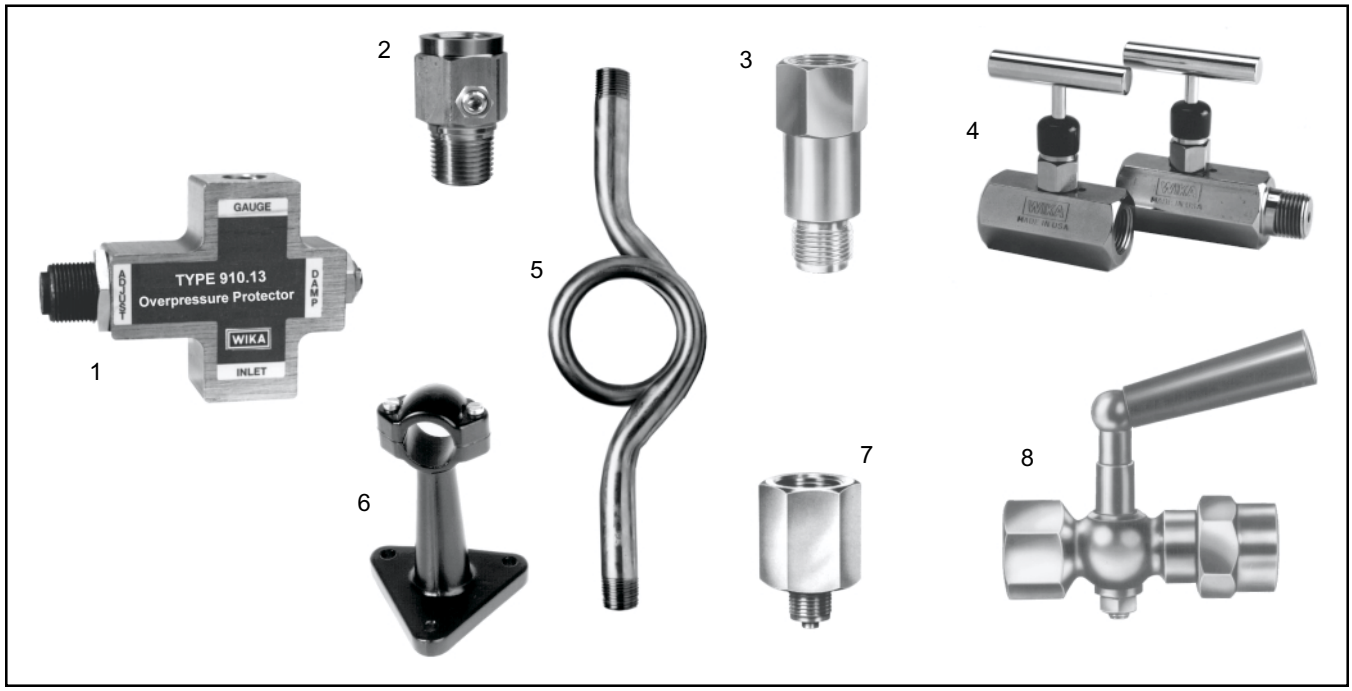

1. Overpressure protector
2. Throttling (adjustable) snubber
3. Adaptor for wall mounting bracket
4. Needle valves
5. Coil siphon
6. Wall mounting bracket
7. Thread adaptor (1/4" NPT -> G1/4A)
8. Pressure gauge cock

Recommended Pressure Gauge Orientation

The table below shows the recommended position for pressure gauges in typical applications.

	Liquid media			Gaseous media		
Contents of tee extension	liquid	liquid with vapor	vapor only	Gas only	Wet gas	Liquid gas condensate
Typically	Condensate	Boiling liquid	LPG	Dry air	Moist air	Steam
Pressure instrument above the process			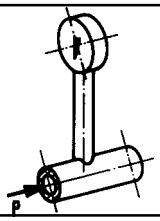	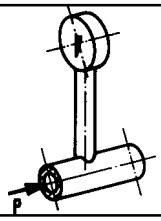	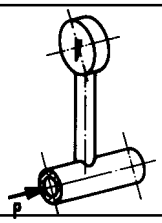	
Pressure instrument below the process	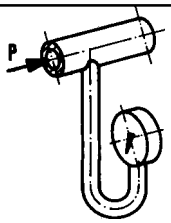	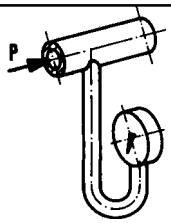				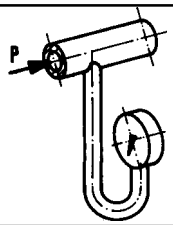

THE MEASURE OF

Total Performance™

Ordering Information:
State computer part number (if available) / model number / size / range / connection size and location / options required.

Specifications given in this price list represent the state of engineering at the time of printing.
Modifications may take place and the specified materials may change without prior notice

WIKA Instrument Corporation
1000 Wiegand Boulevard
Lawrenceville, Georgia 30043-5868
Tel: 770-513-8200 Fax: 770-338-5118
http://www.wika.com e-mail: info@wika.com

02/98

SECTION 11 - APPENDICES

11.1 - EQUIPMENT MAINTENANCE LOG

GENERAL MAINTENANCE LOG – EQUIPMENT TAG :					
Date	**Time**	**Problem[1]**	**Task Performed**	**Remarks**	**Initials**

Notes: 1. Was this repair planned or unscheduled? Is it a recurring event?

J04

Meliadine STP Expansion

Operation & Maintenance Manual

20C1131-J04-0001,00

Section 1 Contacting H_2O Innovation 5
Section 2 System Overview 6
2.1 Introduction 6
2.2 Process description 6
2.2.1 Aerobic biological treatment 6
2.2.2 Membrane filtration system 7
2.2.3 UV Disinfection System 7
2.3 Design parameters 8
2.4 Critical Parameters of raw water 9
Section 3 Pre Operational Procedures 10
3.1 Installation Instructions 10
3.1.1 Introduction 10
3.1.2 Shipping, Receiving and Storage 10
3.1.3 Skid and Tank Mounting 11
3.1.4 Equipment Installation 11
3.1.5 Valve Installation 12
3.1.6 Nozzles and Piping 12
3.1.7 Electrical Installation 14
3.2 Commissioning 15
3.3 Calibration and Instrument Care 15
Section 4 System Configuration 17
Section 5 Operation Procedures 19
5.1 Modes of operation of the System 19
5.2 Modes of operation of the dosing system 20
5.3 Return Activated Sludge Flow 21
5.4 Operating the System 21
5.4.1 Starting procedure 21
5.4.2 StoPping or Restarting the System 22
5.4.3 Operating Guidelines 22
5.5 Permeability and Transmembrane Pressure 22
5.6 Manual Controls 23

Section 6 System Maintenance Procedures 24
6.1 Equipment Maintenance 24
6.1.1 Maintenance Logs 24
6.2 Working with Rotating Equipment 24
6.3 Instrument and Calibration 25
6.4 Lubrification of Electric Motors 25
6.5 Leaking of Mechanical Seals 25
6.6 Analytical Monitoring 26
6.7 Membrane Maintenance 26
6.7.1 Membrane Fouling 26
6.7.2 Foulants 27
6.7.3 Cleaning Protocol 28
6.8 Trouble Shooting 29
Section 7 Safety 32
7.1 Our First Priority – Safety 32
7.2 Preamble and General Precautions 33
7.3 Safety Standards 34
7.4 Personal Protective Equipment (PPE) 34
7.5 Key Safety Warnings 34
7.6 Safety Guidelines 38
7.7 Material Safety Data Sheets 40
7.7.1 Sodium Hy ro i e 41
Section 8 Controls documentation 74
8.1 Process Control Narrative 74
8.2 Alarms List 126
8.3 I/O List 130
Section 9 Drawings and Diagrams 137
9.1 Piping and Instrumentation Diagrams (P&IDs) 137
9.2 General Arrangement Drawings 146

9.3 Equipment List 152
9.4 Valve List 159
9.5 Instrument List 163
9.6 Ele tri al Spare Parts List 167
9.7 Me hani al Spare Parts List 169
9.8 Electrical Schematics 170
9.9 Single Line Diagram 190
9.10 Control Panel Drawings 195
Section 10 Appendices 207
10.1 Equipment Maintenance Log 207

SECTION 1 - CONTACTING H_2O INNOVATION

If you need telephone or on site service support, chemicals, membranes, filters, or spare parts for your system, please contact your H_2O Innovation SP&S Regional Manager. If they are unavailable or to place standard orders the following contact information can be used.

Service in the United States
(763) 566 8961
service.us@h2oinnovation.com

Service in Canada
(418) 688 0170 #321
service.ca@h2oinnovation.com

Should you require EMERGENCY support for anything other than a chemical spill, you can contact our 24 hour hotline at 1 855 H20 SRVC (1 855 426 7782). The number is not routed to a call center, but rather it will ring the cell phone of the service person on call. While we cannot commit to an immediate answer, our goal is to respond to emergency calls within 2 hours. For emergencies regarding chemical spills, refer to the SDS for the specific chemical.

Please note that the following standard rates may apply (all rates are valid for 2020 calendar year – please contact H_2O Innovation for a current rate sheet if required).

Table 1: Service Rates

Role	Hourly Rate
On-site: Field service technician [1-4]	$125
On-site: Engineer or Programmer [1-4]	$125
Off-site: Field service technician [5]	$125
Off-site: Engineer or Programmer [5]	$125

Notes:
1. Hours in excess of a 10 hour work day will be invoiced at 1.5 x the applicable labor rate.
2. Automobile mileage expenses will be invoiced at $0.56 / mile.
3. Hotel, airfares, flight change fees and related travel expenses will be invoiced at 1.15 times cost.
4. Meals will be invoiced at a per diem rate of $58.50.
5. Including on site visit preparation, travel time, support by telephone or email and report writing time.

SECTION 2 - SYSTEM OVERVIEW

2.1 - INTRODUCTION

This operation and maintenance manual, submitted by H_2O Innovation, is intended for a membrane bioreactor containerized wastewater treatment plant. This system consists of the following subsystems:

1. Aerobic Biological Treatment
2. Membrane Bioreactor (MBR) Filtration System
3. Ultra Violet Treatment System

This wastewater treatment system is designed to be an expansion of the municipal sewage surface water discharge at Meliadine Lake. The system was based on a maximum daily flow of 83 m^3/d to provide a total of 299 m^3/d with the original system capable of treating 216 m^3/d.

This manual is intended to cover various equipment, instruments and valves that make up the wastewater treatment system and the specifications and design conditions. Equipment that is not part of H_2O Innovation's supply is not covered in this manual. Moreover, it is beyond the scope of this manual to describe the operating processes and control systems that are not provided by H_2O Innovation.

This manual contains drawings of the system, process and instrumentation diagrams, wiring diagrams, maintenance procedures and any other documents necessary for operation. In addition, subsequent parts of this manual contain the necessary technical documents, obtained from manufacturers, to operate specific components and ensure good maintenance procedures.

2.2 - PROCESS DESCRIPTION

2.2.1 - AEROBIC BIOLOGICAL TREATMENT

Screened raw water falls by gravity from the screens into the sump tank, where it is pumped to the aerobic tank, which is located outdoors. Aerobic biological treatment remove the organic load (measured as BOD) of the wastewater. Bacteria grown in the bioreactor remove unwanted organic pollutants to produce a treated water of high quality. Oxygen is supplied by regenerative blowers and is injected by fine bubble diffusers in the tank. The diffusers are designed for a wide range of air flows, according to the system's demand in oxygen. It keeps a dissolved oxygen concentration of at least 2 mg/L at any time to satisfy the needs of the biomass. The mixed liquor suspended solids (MLSS) overflows into a standpipe inside the tank and flows by gravity to the membrane filtration trains.

2.2.2 - MEMBRANE FILTRATION SYSTEM

Membrane filtration is used to separate the bacteria from the water to ensure keeping them in the process at the desired concentration. Activated sludge is returned at a constant flow rate to the aerobic tank to prevent a build up of sludge in the membrane tank. The return activated sludge (RAS) is pumped at a higher flow rate than the design flow rate of the plant, to make sure that there is good circulation in the whole system and that there is no accumulation of solids.

The membranes chosen for this plant are manufactured by Hydranautics. The HSM450 ES HSE15 model is totally submerged and has a pore size of 0.4 microns, which remove all suspended solids in the effluent.

Permeation pump are provided to suction the effluent through the membrane modules and transport it to the permeate tank. Permeation pumps are supplied with variable speed drives to overcome any changes in transmembrane pressure and achieve the design flows at all times.

The operating cycle for the selected modules is to suction effluent water for seven minutes and to relax the membrane for one minute. The cycle optimizes the long term operation of membrane modules. The housings are constructed with an integrated diffuser at bottom to aerate continuously the membrane and prevent clogging and accumulation of sludge. The relaxation of the membranes allows extending the interval between cleanings (CIP or Clean In Place). CIP cleans are done about twice a year. Washes are performed with permeate stored the permeate storage tank while a cleaning chemical (either sodium hypochlorite or citric acid) is added. Chemical solutions are reverse flowing through the membranes, which are soaked for a few hours after. After washing, the permeation is restarted. While a train is washing the other train can continue to treat water and ensure a continuous production of effluent.

Once a week, a chemically enhanced backpulse (CEB) should be performed on the membrane modules with sodium hypochlorite to mitigate membrane fouling. Permeate flow is reversed to flow back into the membranes while the cleaning chemical is added inline.

2.2.3 - UV DISINFECTION SYSTEM

From the permeate pumps, each membrane bioreactor train sends permeate through an inline ultraviolet disinfection system. It is a physical process that inactivates instantaneously microorganisms. The UV system process adds no chemicals to the water, and therefore, has no impact on the chemical composition of the effluent. From here, effluent is sent to a common permeate storage tank. The permeate tank acts as a reservoir for treated water that is then pumped to a discharge location. This tank can also be used for CEB and CIP processes, as previously mentioned.

2.3 - DESIGN PARAMETERS

The main design parameters and the general configuration of this wastewater treatment system are presented in the tables below. Table 2 presents the flows that were considered for the design.

Table 2: Wastewater Treatment Plant Typical Flows

Typical Flow	Value
Maximum Daily Flow (ADF)	83 m^3/day
Peak Hour Flow[1]	59 L/s

Note 1 : The equalization system is designed for a peak hourly flow lasting no longer than 1 hour over a 24 hour period

Table 3 presents the influent characteristics and the effluents limits.

Table 3 : Influent Characteristics and Effluent Limits

Parameter	Influent Average	Effluent Quality
BOD_5 (Five-day Biochemical Oxygen Demand)	200 360 mg/L	< 25 mg/L
TTS (Total Suspended Solids)	50 350 mg/L	< 25 mg/L
Alkalinity	250 500 mg/L	
TKN (Total Kjeldahl Nitrogen)	45 60 mg/L	
Ammonia Nitrogen (NH_3-N)	40 50 mg/L	0,89 mg/L
Total Phosphorus	5 12 mg/L	
pH	6,5 8,5	6 9
Fats, Oils and Grease	20 50 mg/L	15 mg/L

Please note that benzene, toluene, ethylbenzene, lead and aluminum are not specifically targeted or removed during the wastewater treatment process and can therefore not be guaranteed.

The design parameters of this system are shown is the following table.

Table 4: Design Parameters of the Wastewater Treatment Plant

Parameter	Value
Number of process trains	1
Number of membrane trains and UV systems in the process train	1
Number of membrane modules per membrane trains	1
Total Membrane Area	1,350 m^2
F:M (Food to Microorganism) Ratio	0.1 kg_{DOB}/kg_{MLSS} per day
Targeted MLSS (Mixed Liquor Suspended Solids) Concentration	<10 g/L

The membranes must **always** be kept wet once they are commissioned.

2.4 - CRITICAL PARAMETERS OF RAW WATER

This configuration is based on the parameters provided in your application package. If significant changes in the concentrations of raw water cause a need for additional treatment equipment, these will be the customer's expense.

Warning: The system can be damaged if water of a different composition that the one that has been submitted is used. A change in the composition of water may request additional equipment, more frequent washing or other different operating procedures. Please also note that the system performances may vary with the quality of the water influent.

Table 3 shows the critical parameters of raw water that need to be respected at all times to make sure not to affect the integrity of the membrane modules.

When properly operated and maintained, the process and equipment designed for this plant adequately addresses the water influent and easily meets the operations specifications. If the feed water is no longer situated in the parameters previously defined due to a change in the quality of the raw water or equipment failure of the unit, you must not operate the equipment and this until the situation is rectified. The situation is restored when the raw water is once again within the operating parameters or if the situation has been evaluated by H_2O Innovation and a discharge is given to continue operations. Continue operations with raw water that exceeds the critical parameters can cause irreversible damage.

SECTION 3 - PRE-OPERATIONAL PROCEDURES

3.1 - INSTALLATION INSTRUCTIONS

3.1.1 - INTRODUCTION

It is expected that the contractor installing this system is familiar with normal construction means and methods for water treatment equipment of this nature and that detailed instructions for installation are not required. Since the installation of the system is outside of H_2O Innovation's scope, the following is provided as general guideline only. Typical construction site safety practices must be followed as a priority. It is critical to review the safety section of this manual before any work begins: Section 7 – Safety.

For each item that is loose shipped with the system, follow the installation instructions included in Section 10 – Vendors O&M Data and Manuals of this manual. This also applies to the membranes provided with the system (if included). When membranes are included, membrane elements need to be protected from drying, freezing and systems must be fully depressurized before loading or unloading membrane elements. Membranes are typically one of the last components to be installed in the plant.

It is not expected that a representative from H_2O Innovation will be on site during the installation phase of the project. Unless special provisions are included in the scope of this project, the H_2O Innovation representative will only come to site once installation has been certified as complete by the contractor.

The following sections provide some general guidelines when it comes to installing the system. Refer to the project drawings (Section 9 – Drawings and Diagrams) for details on how the system is designed and configured. The drawings that the installation contractor will need are included with this manual and are typically piping and instrumentation diagrams (P&IDs), general arrangements (GAs), assembly drawings, and electrical drawings, etc. Drawings provided by the Owner's engineer or other outside firms should also be referred to and discrepancies noted to all affected parties for resolution. Ensure that drawings are red lined and updated as changes are made in the field. These red lined drawings must be forwarded to H_2O Innovation before the field service representative comes to site.

Before performing any installation work please read the section in this manual on safety: Section 7 – Safety.

3.1.2 - SHIPPING, RECEIVING AND STORAGE

Equipment will be typically packaged and shipped from one of H_2O Innovation's factories. Drop shipments are also possible for loose ship items. Please discuss timing of shipments with the H_2O project manager

so that receipt can be coordinated with other site activities. All shipments must be inspected on arrival for signs of damage or discrepancies with the packing slips. Any noted damage must be photographed immediately and a report sent to H2O Innovation. Typically, ownership of the equipment transfers to the installation contractor at the reception of the equipment on site. Damage that occurs after ownership has transferred will not be the responsibility of H_2O Innovation.

Equipment should be stored on site by the installation contractor in a dark, dry location and secured to prevent theft. Temperature should be controlled to between 5°C and 30°C. Ensure control panel doors are kept closed unless the panel is being worked on. This will help to keep the interior clean. Keep strong electromagnetic radiation sources away from the sensitive electrical equipment that comes in control panels and instrumentation during storage and installation.

If rotating equipment is going to be left on site for extended periods, please inform the H_2O Innovation project manager so that advice on how often to rotate shafts can be provided. Also, electrical connection to specific equipment heaters may be needed to prevent condensation, particularly in motors.

3.1.3 - SKID AND TANK MOUNTING

Supports for skids or loose ship items typically consist of a 4” to 6” concrete housekeeping pad that has been designed by a local structural engineer and installed by the site contractor. Foundations for the pads need to be designed to support the planned, wetted equipment weight. It is also possible that other arrangements have previously been discussed and agreed with H_2O Innovation engineering and are reflected on the project drawings. The net result in either case is that a solid, level surface is required around the entire perimeter of the skid frame, equipment item or tank bottom to provide support for the equipment and dampen vibrations.

Lifting procedures are typically produced by specialized contractors on site. H_2O recommends using spreader bars such that angular loads are not applied to lifting lugs on skid frames and tanks.

Skids and tanks are typically anchored to the mounting surface. Anchors are usually specified by a licensed structural engineer for the specific plant location. Refer to the project submittals and drawings for information on anchorage requirements. Anchors should always be installed according to their installation instructions.

3.1.4 - EQUIPMENT INSTALLATION

Place all major components, such as pumps, blowers, skids and tanks as shown on drawings provided in this manual (9.3 – General Arrangement Drawings). Ensure any valves or other components that were removed for shipping are placed in the correct location and fastened.

Major equipment items are often grouted in place. Please refer to specific installation instructions for each item to see if grouting is required (Section 10 – Vendors O&M Data and Manuals). After grouting has been completed and set, align all rotating equipment as described in the installation instructions.

Perform initial startup procedures (vibration checks, bumping) for all rotating equipment as per manufacturer instructions and contractual requirements.

3.1.5 - VALVE INSTALLATION

Butterfly valves should be installed in the partially open position and stroked during the installation process. Please see manufacturer's specific instructions in Section 10 – Vendors O&M Data and Manuals. Mating pipe flanges need to be aligned tangentially and also with an axial gap that agrees with the valve lay length so that no loads are applied to the valve in any direction when it is in place.

Butterfly valves that are installed in lines that could see sediment, solids or two phase flow should be installed such that the valve shaft is horizontal. This allows passage of solids and air.

Ball valves should not be used to support piping loads. Threaded metallic valves should be installed using double pipe wrenches and appropriate sealant on the joints. Orientation is not a concern for ball valves in general. Ensure packing is torqued to the requirements in the vendor information.

3.1.6 - NOZZLES AND PIPING

Interconnecting piping that is not included in H_2O Innovation scope, needs to be supplied by the installation contractor. All piping should be installed according to the drawings provided by both H_2O Innovation and the Owner's Engineer.

Mating piping must not impart a load in any direction to nozzles or other connections on a skid or tank. This means that piping must be fully supported such that if the equipment or skid flange is removed, the piping will remain in its place. Pipe support designs are typically completed and sealed by a structural engineer for the jurisdiction in which the plant is being installed. The engineer should also take dynamic loads due to moving fluids and operating pressure into account in the design of the piping system. Note that PVC piping requires support more often than metallic piping and there are known standards for how often this piping needs to be supported.

Skid and tank drain connections for block and bleed lines, instrument sample drains or general process drains must be designed with an air gap (unless specified otherwise) and sized to accommodate the full expected design flow plus a generous safety margin. Generally speaking, a sloped floor drain should be located in the vicinity of each skid to provide a destination for instrumentation drains and piping maintenance drains. Instrumentation drains should be plumbed into the drain so that slip hazards are not created by water flowing across the floor.

It is expected that the installation contractor will flush all piping before commissioning (this includes factory installed piping. H_2O Innovation recommends that potable water be used for pipe and tank flushing. Frequent visual inspections during construction can be helpful to remove construction trash and dust that often ends up in piping systems.

Piping is often lined for corrosion protection. This is true of carbon steel pipe and also stainless steel pipe. Stainless steel has a thin chromium oxide layer that provides the inherent corrosion protection. Welding, heating or mishandling any of these piping and fittings can damage the coatings and thus compromise the corrosion protection. Metallic piping that is perpetually wet on the outside due to building ventilation issues (or other HVAC issues) is particularly prone to corrosion. Building ventilation needs to be sized to control condensation inside buildings.

Stainless steel components (not just piping) should not be handled by mild steel equipment (like mild steel forklift tines or chains) as the stainless steel surface can be marred or scratched resulting in the loss of corrosion resistance. Carbon steel can be imbedded in the stainless surface and lead to corrosion. *Keep carbon steel from contacting stainless steel during the installation process and only use tools that are dedicated for use on stainless steel when installing and working with stainless steel.*

Also, if stainless steel is stored outdoors, it should be covered and protected from the blowing dust and sand that is common on construction sites. The surface of the stainless steel can be abraded and damaged when stored outdoors. Also, when grinding or welding near stainless steel, protect the material with guards or ensure that the stainless is thoroughly cleaned, pickled and passivated afterwards (it is possible to use pickle/paste compound, but this method is not suitable for large surfaces or is not a substitute for pickling according to ASTM A380 in an acid bath).

Stainless steel can also be subject to attack by chlorides and sources are common in water treatment plants (salt water, sodium hypochlorite). Ensure that all steel surfaces are kept away from chloride sources that they are not designed to protect against.

Polyvinyl chloride (PVC) piping is brittle and care should be used when handling components made of PVC. Temperature extremes should also be avoided with PVC as well as mechanical stresses. PVC is not ultraviolet (UV) resistant and should not be stored where sunlight can contact the surface (this includes both direct and indirect sunlight). Chlorinated polyvinyl chloride (CPVC) piping does have higher UV, chemical and temperature resistance but the same general storage guidelines should be followed. PVC is not designed to convey compressed gasses (like air). Air must be completely bled from all PVC or CPVC lines before equipment is put into operation.

High density polyethylene (HDPE) is often used as an alternative to PVC. The key factor when installing HDPE piping is that it expands and contracts significantly with temperature shifts. Temperature can be changed in an HDPE pipeline by internal factors (e.g. during a high temperature CIP) or by external factors (e.g. a stagnant line exposed to sunlight). The support system and joints need to be designed to accommodate this expansion and contraction of HDPE.

Joints in chemical lines should not be located over electrical equipment or over areas where operators could reasonably be anticipated to be on a regular basis. Ideally, chemical system joints have flange guards installed such that leakage can be detected visually. Another approach for chemical systems is to use double walled piping with leakage detection systems.

Follow torquing recommendations provided by equipment vendors for all bolted connections; ideally by hand and not with power tools. Connections should be torqued in a star pattern to apply even force to the flanges or joints. Please ensure that the required flat washers and lock washers are included with these connections and that the bolt heads and nuts lie flat on the washers.

Note that stainless steel bolting will require an appropriate anti seize compound applied to the threads before the connection is made. Fastening hardware specifications are listed on H_2O Innovation drawing notes and must be followed. These hardware specifications are applicable to shop manufactured equipment and field assembled components. For connections that are submerged, use NSF approved anti seize in drinking water applications (e.g. White Knight food grade anti seize compound).

3.1.7 - ELECTRICAL INSTALLATION

Refer to the project electrical drawings in this manual (Section 9 – Drawings and Diagrams) and the plant electrical drawings provided by the Owner's engineer. Electrical connections and interconnections to junction boxes and panels provided by H_2O Innovation must meet regulatory and local standards. Electrical work must be completed by licensed and insured electricians in the jurisdiction where the facility is being constructed. Interconnecting electrical cables need to be sized for the maximum anticipated electrical load and well supported in trays or conduit. Use separate cable trays for 24 VDC, 120 VAC and 600 VAC wire runs. Ensure that all panels, skids and cable trays (and electrical equipment in general) are properly and adequately grounded.

Generally speaking, systems will have a control panel and a power panel (these are often combined in smaller plants). Both panels need to be mounted and anchored in accordance with the project drawings. Like mechanical equipment, electrical equipment needs to be anchored according to local structural requirements if it is loose ship. Pre mounted panels are taken into account when analyzing the support frames.

Field mounted instrumentation is normally wired to either a local junction box or back to the main control panel. This will be detailed in the electrical drawings for the plant. Ensure that the wire numbers depicted in the electrical drawings are clearly shown and permanently labeled on the field cables. Ensure that the electrical drawings are red lined and updated as changes are made in the field. These red lined drawings must be forwarded to H_2O Innovation before the field service representative comes to site.

Once equipment has been installed and wired the on site electrician typically:

1. Bumps three phase motors to ensure that they have been wired for the correct rotational direction and changes the wiring if not correct.
2. Performs a continuity test for all field wiring.
3. Powers up the panels.
4. Ensures that all analog and digital signals to and from the Programmable Logic Controller (PLC) are transmitting properly.
5. Calibrates all instruments (see Section 3.3 – Calibration and Instrument Care).

6. Red lines electrical drawings with any changes that occurred in the field.
7. Shuts off power feeding the plant to ensure that the UPS is working properly.
8. Ensures that all of the remote IO is communicating with main PLC. Since a ring topology configuration is typically used, any Ethernet cable or fiber optic cable can be disconnected and the system should remain connected and communicating.

3.2 - COMMISSIONING

Before performing any commissioning work on this system please read the section in this manual on safety: Section 7 – Safety.

Commissioning services and on site support are included in the contract and provided by H_2O Innovation. Refer to specific documentation related to commissioning for detailed information. Typically, the customer or contractor is responsible for ensuring a supply of electricity, raw water and a receiving destination for the treated water for pipe and module flushing and performance testing of the equipment. Also, the customer is responsible for the provision of necessary analytical tests for treated water quality during performance testing.

The services of a qualified electrician, pipefitter and millwright are required when H_2O Innovation staff are on site. The costs for these journeyman services are normally excluded from the commissioning contract value.

3.3 - CALIBRATION AND INSTRUMENT CARE

Before performing any calibration work on this system please read the section in this manual on safety: Section 7 Safety.

Table 6 provides some general guidance on calibration and care for instruments in this facility and where to find the vendor information related to each type of instrument.

Table 6: Calibration and Instrument Care Guidance Summary

Manufacturer	Instrument	Frequency	Necessary Materials	Tab
ABB	Pressure Transmitters	Semi annual	None	TAB A 1
ABB	Turbidimeters	Quarterly	None	TAB A 2
Endress & Hauser	Pressure Transmitters	Semi annual	None	TAB E 1
Endress & Hauser	pH and ORP Sensors	Semi annual	Calibration solution	TAB E 2
Endress & Hauser	Level Transmitters	Annual	None	TAB E 4
Endress & Hauser	Dissolved Oxygen Sensors	Monthly	Replacement electrolyte, membrane body and sealing ring (if required)	TAB E 5
Endress & Hauser	Pressure Transmitters	Semi annual	None	TAB E 6
Endress & Hauser	Flowmeter	Semi annual	Replacement seals	TAB E 7
IFM	Air Flowmeter	Monthly	Alcoholic cleaning solution	TAB I 2
Wika	Pressure Gauge	Semi annual	Glycerin	TAB W 1

SECTION 4 - SYSTEM CONFIGURATION

This membrane bioreactor system provided by H_2O Innovation is fully automated, which greatly reduces the operator's work. The system also includes monitoring functions and remote control access which allows more time for the operator to do other tasks. Refer to the literature and manufacturers manuals that are provided at the end of this manual for a detailed description of installation, operation and maintenance of any specific component.

The system designed for the Meliadine plant is based on aerobic biological treatments. The figure below shows the complete process schematics for this plant, including the expansion.

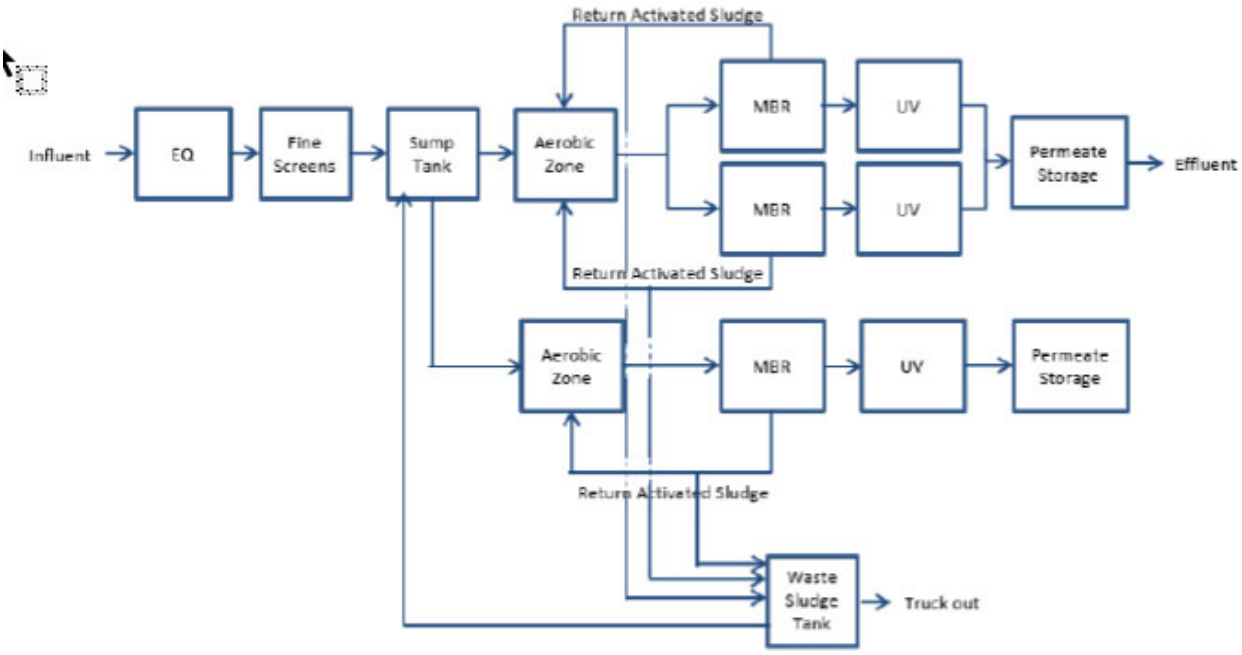

Figure 1 : Process Flow Schematics

The process illustrated above is much more detailed in the process and instrumentation diagrams (P&ID) available in Section 9.1 of this operation and maintenance manual. A basic understanding of the relationship between the different components of the system is a prerequisite to operate well and make effective maintenance of the system. The study of the drawings listed in the table below combined with the reading of Section 2.2 – Process Description provides the necessary understanding as previously mentioned.

Table 7 : Description of Process and Instrumentation Diagrams (P&ID)

Drawing Number	Drawing Name
20C1131-C01-0110	Sump Booster Pump
20C1131-C01-0720	Aerobic Tank
20C1131-C01-0740	Membrane Treatment Train
20C1131-C01-0750	Blowers
20C1131-C01-0790	Permeate Tank and Effluent Pumps
20C1131-C01-0800	NaOH Dosing System

SECTION 5 - OPERATION PROCEDURES

Before operating the system, please read the section in this manual on safety: Section 7 – Safety.

This wastewater treatment system is controlled by digital input signals and a specific start sequence for the system. In this way, a transition step by step is done slowly and smoothly from a normal start up to an automatic process. The shutdown sequence is similar and closely follows the startup procedure.

Each piece of equipment forming this system appears on the touch screen that acts as the human machine interface (HMI). When the symbol of a piece of equipment is selected, a screen appears, allowing the operator to configure and control this specific piece of equipment. From the screen, the operator can configure the device for a *control by the operator* or a *control by PLC* (automatic).

If the piece of equipment is set to *control by the operator mode*, the equipment starts to operate, regardless of the status of the plant. If the equipment is set to off, it will stop regardless of the status of the plant.

If the equipment is set in *control by PLC mode*, it will start or stop according to the selected mode and settings from the plant. For equipment whose speed can be controlled, such pumps with variable speed drives, the operator must enter a specific speed from 0 100%.

It is therefore possible to control each piece of equipment independently according to the desired results. The membrane bioreactor system is very simple to operate and requires set up and monitoring as described in this section.

5.1 - MODES OF OPERATION OF THE SYSTEM

For more information on the modes of operation of this system as well as on the control philosophy, please refer to Section 8.1 – Process Control Narrative of this operation and maintenance manual. There are five modes of automatic operation on the provided system. They are described in table 8 below.

Table 8 : Modes of Operation of the System

Mode	Description
OFF	All process equipment is OFF.
Production	Production Mode occurs during normal operation when sewage is being sent to the plant. All process equipment operates based on the automatic control logic to provide treatment of sewage.
Standby	Standby Mode occurs when the amount sewage being sent to the system is less than the system capacity such that the system must wait for adequate feed to continue operation.
CEB	Chemically Enhanced Backpulse (CEB) is a weekly membrane maintenance process that sends a reverse flow of cleaning agents in the membrane modules to mitigate membrane fouling.
CIP	Clean In Place (CIP) is a process designed to return the membranes to a near clean state using a high chemical concentration and relatively long duration (4 hours). The process is conducted semi annually or as required.

The sequence of operation chart, presented in Section 8.1 – Process Control Narrative, determines which equipment is working according to each of the operating modes.

5.2 - MODES OF OPERATION OF THE DOSING SYSTEM

For the chemical skid to be operational, the valves must be arranged to allow the chemical to flow from the tank to the designated service point. For the chemical pump to be calibrated, the valves must be arranged to allow the chemical to flow from the tank to the calibration column. After calibration the column should be emptied before returning back to service. The valves must be arranged to allow the chemical to flow from the calibration column back to the tank. All these modes of operation are achieved by opening and closing the valves according to table 9 below.

Table 9 : Valve Positioning for the Modes of Operation of the Dosing System

Tag Number	Calibration Filling	Calibration Emptying	Operation
HV-XXX01	O	O	O
HV-XXX29	X	X	X
HV-XXX50	O	O	O
HV-XXX99	X	X	O
HV-XXX15	O	X	X
HV-XXX12	X	O	X
HV-XXX53	X	O	X
HV-XXX52	O	O	O

5.3 - RETURN ACTIVATED SLUDGE FLOW

The flow rate of this pump should be set to approximately 400% of the design flow rate. A pump bypass and valve is included to allow this flow to be adjusted easily.

5.4 - OPERATING THE SYSTEM

Before operating the system, please read the section in this manual on safety: Section 7 Safety.

Before starting the system, the wastewater treatment plant must be prepared for the operation. Use the following checklist as a guide to ensure that the unit is ready to operate. Here are the parameters to be monitored prior to starting the system:

- All necessary processing circuit breakers must be closed.
- Check that chemicals are at an acceptable level.
- Isolate the non functional parts for repair and maintenance.
- Check the conditions of the previous alarms have been viewed, corrected and reset.
- Put all positioners back in automatic mode.
- Before starting, especially after long periods of stops, inspect the equipment and check that each piece of equipment is ready to operate according to the manufacturer's manual.

5.4.1 - STARTING PROCEDURE

A normal startup can be launched at any time when the plant is ready to operate. The PLC starts and operates the treatment system automatically after the initial startup sequence. It is important to position the manual valves so that the process can function properly, as described in Section 8.1 Process Control Narrative.

Here is the standard automatic start sequence for a waste water treatment plant:

1. Open the power of the human machine interface (HMI) and ensure that the display shows the treatment main screen (or overview screen). If the power is on, but the screen is blank, touch the screen to activate it.
2. If necessary, enter the username and password, then press the OK button. The main screen should then appear.
3. On this screen, put the train in automatic mode to make it available for production. General rule, the entire system is placed in automatic mode and the PLC will ensure that all equipment used alternatively. This provides a balanced use of the available equipment. The PLC will also ensure that equipment is started in a normal sequence, so that no damage will be done to the equipment.

5.4.2 - STOPPING OR RESTARTING THE SYSTEM

The same principle applies to the shutdown sequence. The PLC will ensure that the equipment stops logically not to damage the equipment. Stopping the system can be requested at any time during production. Stops can also be caused by alarms. Please refer to Section 8.2 Alarm List for more details.

To restart the system after a shutdown, you can use the following standard procedure:

1. At the HMI, navigate to the display of alarms and errors.
2. Stop the audible alarms if necessary.
3. Based on the information provided on the screen, determine what conditions may have caused the shutdown of the treatment system.
4. If the cause of the alarm is a problem that requires a physical intervention in the plant, refer to section 6.8 Trouble Shooting for more information on recurring causes of stops.
5. Reset the alarm (or reset all the alarms) on the screen. The plant will return to its automatic mode and resume production.

5.4.3 - OPERATING GUIDELINES

Here are the major guidelines for daily operations of this water treatment system:

- The critical parameters of the feed water (Section 2) should be inspected at appropriate intervals as indicated by the operation experience and adjusted if necessary.
- It is important to keep records of the system daily and accurately. The information in these sheets is essential to solving problems related to operation and performance.
- Maintain and schedule preventive maintenance regularly. This includes visual inspection, repairing leaks, cleaning and touch up paint.

5.5 - PERMEABILITY AND TRANSMEMBRANE PRESSURE

The transmembrane pressure (TMP) is a measure of the membrane's performance. This allows the monitoring of changes in the permeability. It will provide information on the performance of CIP cleans and effects of the changes in the water quality. TMP is the variation of pressure across the membrane, which is calculated by subtracting the hydrostatic pressure of membrane permeate side to the pressure of the feed side during permeation. The calculation is done in reverse during periods of flow reversal.

$$TMP(kPa) = Feed\ Pressure - Permeate\ Pressure$$

Permeability is a calculated parameter that normalizes the PTM for different flow rates and temperatures. The flow rate per membrane surface area is called the membrane flux and is calculated based on the equation below.

$$Flux\ \left(\frac{L}{m^2 h}\right) = {Flow\ \left(\frac{L}{h}\right)}\Big/{Membrane\ Area\ (m^2)}$$

Permeability is the flux divided by the transmembrane pressure.

$$Permeability = \frac{Flux\ (\frac{L}{m^2 h})}{TMP\ (kPa)}$$

Finally, to ensure proper reading of the permeability, it must be corrected by taking in consideration the effect of temperature using the following equation:

$$Permeability\ at\ 20°C = Permeability\ \times 1{,}024^{\,T-20}$$

In the equation above, T is the temperature in Celsius degrees.

5.6 - MANUAL CONTROLS

Some measure of manual control of equipment is possible; however these controls should only be used in exceptional circumstances or for troubleshooting assistance. It is expected that this plant operates in automatic mode most of the time.

1. **Valves**: Valves can be placed in an override condition and opened or closed manually from the HMI. Normally, automated valves are left in the automatic condition.
2. **Pumps or blowers with VFDs**: Pumps or blowers with Variable Frequency Drives (VFD) can be operated manually at specific frequencies. This allows the operator to adjust the flowrate of the pump or blower manually. Normally, the frequency that a pump or blower operates at is controlled by the PLC in automatic mode.
3. **Pumps or Blowers without VFDs**: Pumps or blowers without VFDs can be placed in ON or OFF mode. Normally, pumps or blowers without VFDs are left in automatic mode and turned ON and OFF by the PLC.
4. **Chemical Pumps**: Typically chemical pumps are operated only in AUTO mode. Refer to section Section 7 Safety to understand some of the risks involved in chemical handling. Extreme care should be used when operating chemical pumps in manual mode. Chemical pumps typically are controlled with an ON or OFF signal.
5. **Control Panels**: Control panels can be manually disabled and de energized with the disconnect switch on the control panels themselves.
6. **Emergency Stop Button**: System operation can be stopped by pressing the emergency stop button. This is a red button located on the main control panel. In some systems, buttons are also located on remote panels but the functionality is the same. These buttons will place the system in a neutral state (all equipment placed in the OFF state) and system operation cannot resume until the button that has been depressed is physically pulled out to its ON location. When the system restarts, it restarts according to the normal start up sequence as defined in the PLC program.

SECTION 6 - SYSTEM MAINTENANCE PROCEDURES

Before performing any maintenance, trouble shooting or cleans on this system please read the section in this manual on safety: Section 7 Safety.

6.1 - EQUIPMENT MAINTENANCE

This manual includes vendor catalogs providing operation and maintenance instructions for the major equipment and components. Operation and maintenance personnel should become familiar with these instructions in order to develop quick troubleshooting and proper maintenance techniques.

Refer to Section 10 – Vendors O&M Data and Manuals for details on how to maintain equipment items provided by sub vendors. The following sections are specific to system maintenance for the MBR provided system.

6.1.1 - MAINTENANCE LOGS

Clear documentation of system and equipment maintenance is helpful in understanding equipment operating costs and in warranty claims. It is recommended that for each piece of equipment in the plant, equipment identification and maintenance log sheets are kept. An example of a log sheet is shown in the appendices of this document.

It is important to perform preventive maintenance procedures periodically and regularly. Once a month, it is primordial to check the entire system for signs of wear, deterioration and damage. These symptoms include excessive vibration, excessive or unusual noise, corrosion, pipes or loose connections and leaks.

During the inspection period, it is important to remove dust, sand, oil, moisture or other contaminants from the external surfaces of the engine. Also, remove dust, dirt or other debris from the air inlets.

6.2 - WORKING WITH ROTATING EQUIPMENT

When working with or around pumps, blowers and other rotating equipment items, in addition to the instructions listed in Section 10 – Vendors O&M Data and Manuals, take the following precautions:

1. Before performing maintenance, isolate and drain all piping connected to a pump.
2. Before performing maintenance on any rotating or powered equipment item, ensure the item is brought to a zero energy state and complete all lock out, tag out procedures required by government regulations, plant specific procedures, and those recommendations in this manual's section on safety.
3. Perform service using manufacturer's manuals as a guide.

4. After completing maintenance, replace any guards or other safety components removed during the procedure. Personnel working on pumps used to transfer chemicals must be familiar with the safe handling procedures associated with the chemicals involved.
5. When working with diaphragm pumps or other chemical transfer pumps, be aware that some media may remain within the pump's diaphragm chamber even after the pump has been drained and ensure proper PPE is worn during this work.
6. In general, motors should be inspected at regular intervals; approximately every 500 hours of operation or every 3 months, whichever occurs first. Keep the motor clean and the ventilation openings clear. Electrical connectors should be tight. Megger readings on motor insulation should be taken and recorded to monitor for issues.

6.3 - INSTRUMENT AND CALIBRATION

It is important to calibrate instrumentation and sensors at least twice a year. It is also important to confirm the status of the level and pressure switches at least once every six months. To do so, refer to their operation and maintenance manuals for specific calibration procedures and to the table in section 3.3 – Calibration and Instrument Care.

6.4 - LUBRIFICATION OF ELECTRIC MOTORS

Grease the bearings on the electrical motors of the pumps every six months (if necessary). The procedure is as follows:

1. Stop the electric motor.
2. Use a grease gun containing high quality grease that has a wide temperature range.
3. Remove the upper and lower caps of the grease ports of the shaft bearings. If a lubricant fitting is not permanently installed, install a grease gun fitting in the upper port.
4. Pump new grease into the bearing by upper port until the new clean grease appears at the drain port (lower port).
5. Roll the engine briefly until grease stops flowing through the port of the drain. Replace the cap of lower port (drain) and the cap of the upper port.

Caution: Do not over lubricate the engine, as excessive lubrication can damage the bearing seals.

6.5 - LEAKING OF MECHANICAL SEALS

It is important to check for leaks from the mechanical seals after the first twenty four (24) hours of operation. Thereafter, check the seals weekly. A leak is considered acceptable when it is not more than a drop every three or four minutes. If the leak rate increases, the gasket should be replaced.

6.6 - ANALYTICAL MONITORING

It is important to carefully monitor the plant over time to allow early detection of process problems. The collected information should be saved in a log file. It will be requested when providing troubleshooting assistance. Table 10 provides recommendations of a monitoring strategy.

Table 10: Recommended Monitoring Strategy

Source	Analyses	Source	Frequency
Feed Flow Rate	Flow Rate	Influent flowmeter	Daily
Waste Volume	Volume	Estimate volume wasted	Daily
Feed Sample	BOD, mg/L TSS, mg/L NH_3, mg/L N TKN, mg/L N TP, mg/L Alkalinity, mg/L as $CaCO_3$ pH Conductivity	Raw wastewater feed to the plant	Weekly Daily for first 4 weeks
Bioreactor Sample	MLSS, mg/L MLVSS, mg/L Dissolved Oxygen, mg/L pH	From Bio Wheel Tank	Weekly Daily for first 4 weeks.
RAS Sample	MLSS, mg/L	From RAS/WAS line.	Weekly Daily for first 4 weeks
Treated Water Sample	BOD, mg/L TSS, mg/L NH_3, mg/L N NO_3, mg/L N TP, mg/L Alkalinity, mg/L as $CaCO_3$ Total Coliforms MPN/100mL Fecal Coliforms MPN/100mL pH	Immediately after UV disinfection	Weekly or based on reporting requirements Daily for first 4 weeks.

6.7 - MEMBRANE MAINTENANCE

6.7.1 - MEMBRANE FOULING

Membranes foul with use and this is a normal process. The expected rate of fouling is a design parameter that is used to determine the cleaning and maintenance protocols for the facility. The cleaning frequency is a function of the production rate and water quality, since cleaning interval and flux are inter related. The higher the flux the plant is operating at, the higher the observed fouling rate will be, and the shorter the cleaning interval.

Membrane fouling creates an increase in the trans membrane pressure (TMP). As a result, there are increased energy costs and potentially reduced membrane life (depending on the type of fouling). When

TMP increases, the permeate pump requires more energy to pull the water across the membrane to meet the flow set point. In order to operate the system in the most efficient way and keep costs down, running with a balanced TMP range is the recommended practice.

6.7.2 - FOULANTS

Foulants, in general, are compounds that accumulate on a membrane surface or inside the membrane pores. They reduce the effective membrane surface area reducing the area available for water to pass across the membrane. Foulants are divided into four types as shown in Table 11 : Foulants and Treatment.

Table 11 : Foulants and Treatment

Foulant Type	Definition	Treatment and Prevention
Solids	High levels of solids can clog membrane modules and prevent filtration.	Ensuring that pre screening is operating effectively and that wasting to the sludge holding tank occurs regularly.
Precipitation	Scale can form when the compounds in feed water are concentrated beyond their solubility (more common in RO and NF systems). For example, calcium carbonate and magnesium sulfate. Hard scale formation membranes, can block water flow. High pHs and hard feed water can promote scale formation.	Acid based cleaners are used to remove fouling from precipitation. Adjustments to the waste stream concentration can also help. Lime softening and downward feed water pH adjustment can minimize risk.
Biological	Living organisms such as bacteria, fungus, and algae, are biological foulants. Colonies can form on the surface of the membrane blocking water flow through the membrane surface.	Regular treatment with antimicrobial agents and biocides are effective in preventing and reversing biological fouling. Sodium hypochlorite is the most frequently used agent to kill biological organisms.
Absorptive	Oils, polymers, cationic surfactants, and hydrocarbons, are common adsorptive foulants.	This type of fouling can be irreversible and feed waters containing these compounds should be minimized or piloted beforehand.

Since feed waters can change over time, it is important to have a regular sampling and testing program for potentially fouling compounds. This information is very valuable in diagnosing membrane fouling issues in the future, even if it is simply used to rule out potential causes.

6.7.3 - CLEANING PROTOCOL

The section 8.1 – Process Control Narrative of this manual describes the cleaning procedure for the project. Table 12 describes the recommended cleaning frequency for each type of cleaning and chemical cleaners.

Table 12 : Required Cleaning Frequency for This Plant

Cleaning Type	Chemical Product	Frequency
CEB (Chemically Enhaced Backpulse)	Sodium Hypochlorite	Once a week
CIP (Clean In Place)	Sodium Hypochlorite	Twice ayear
CIP (Clean In Place)	Citric Acid	Twice ayear

If alternatives to these cleaning frequencies seem necessary, discuss with your H_2O Innovation project manager. The cleaning operations must all be listed in a table (see Table 13: Typical Cleaning Log Sheet) by operators of the plant. This information is essential for monitoring the long term performance and is required to maintain the warranty of the membranes. H_2O Innovation is a manufacturer of specialized cleaning chemicals and also offers laboratory testing services that can help determine better cleaning protocols for fouled membranes. It is important to identify and resolve the membrane cleaning and fouling problems as quickly as possible to avoid damage to the membranes.

Table 13 : Typical Cleaning Log Sheet

Cleaning Information	Date	Date	Date	Date	Date
Cleaning Type					
Chemical Product					
Volume of Chemical Product Used					
Starting Time					
Duration					
Temperature at the beginning (°C)					
Temperature at the end(°C)					
Permeability before cleaning (corrected at 20°C)					
Permeability before cleaning (corrected at 20°C)					

6.8 - TROUBLE-SHOOTING

Before performing any maintenance, trouble shooting or cleans on this system please read the section in this manual on safety: Section 7 Safety.

This trouble shooting guide is intended to provide basic information only. Experienced operators and maintenance staff are required at any facility that has significant process equipment such as this one. Only qualified and trained personnel should engage in trouble shooting or maintenance on the equipment covered by this manual. The information provided in Section 10 – Vendors O&M Data and Manuals must also be used for diagnosing and trouble shooting issues with sub vendor components.

The following table describes some common problems and potential resolutions.

Table 14 : MBR System Trouble-Shooting Tips

Problem	Possible Cause	Potential Resolution
High TMP during production	Membrane fouling has occurred. If fouling occurred rapidly and unexpectedly, has there been an upstream issue?	Execute cleans as described in this manual once flow peaks have been alleviated.
	A manual valve in the pump suction line or filtrate line is partially closed.	Check positioning of all manual valves.
	Instrumentation failure.	Check the calibration and diagnostics of the feed pressure transmitter. Are the instruments communicating with the PLC?
	PID tuning parameters have been altered.	Confirm with H_2O Innovation that the PID is as it was left at the end of commissioning. Have tuning parameters been adjusted?
	Aeration issues.	Check that air is getting to the entire membrane module. Air needs to get to all of each module to scour the membrane surface appropriately.

Problem	Possible Cause	Potential Resolution
	Accidental adjustment of set points.	Confirm set points in HMI reflect the commissioned values or agreed to, modified values.
Pump low flow alarms	Manual valves are closed or partially closed. Has maintenance recently occurred on the pump or system?	Confirm that manual valves are all in the correct positions. Isolation valves should be open for equipment that is intended to be online.
	Automated valves are not actuating as expected.	Check that the automated valves in the line are opening when they should for the programming sequence by looking at the position indicators on the actuators. Confirm that the valve timing is suitable (delays between valve actuation and pump actuation). Confirm that all pneumatic lines are open and connected to pneumatic valves. Confirm lines do not contain frozen moisture.
	Piping leaks.	Check that all piping connections are tight and not leaking.
	Instrumentation related issues.	Check to see if there is air trapped in the pipe where the mag meters is installed or if air is passing through a mag meter.
	Air entrainment.	Check if air is causing issues with pump priming and proper functioning.
	Issues with VFD.	Check to see if the VFD has presented any faults.
Analogue device issues	Instrumentation issues – moisture ingress.	Check that the seals in the instrument are good.
	Power issues.	Confirm that the instrument is receiving power and has booted up correctly. Check that the power supply is working.

Problem	Possible Cause	Potential Resolution
	Communication issues.	Check that the PLC is receiving a signal from the instrument and if the instrument has HART, check the instrument's on board diagnostics.
Digital device issues	Power issues.	Check that the fuse has not blown to the switch and that the switch is receiving power as expected.
	Communication issues.	Check that the PLC is receiving a signal from the switch (continuity).
Filtrate water quality	Leaking modules or plates.	A module inspection may be required – please contact H_2O Innovation.
	Instrumentation issues (typically turbidity; if installed).	The most common cause of high turbidity are issues with the instrument itself. Confirm that the instrument is functioning correctly and that calibration is accurate. Confirm that the flow through analytical instruments is within specification.
	Air entrainment.	The second most common cause of direct quality measurement issues is air entrainment in the process stream. Confirm that the flow rate to the instrument is within specification and that degassers are functioning appropriately.
Unexpected alarms on HMI	Devices in manual.	Required equipment is disabled or not in automatic mode. Place all available equipment in AUTO mode.

SECTION 7 - SAFETY

7.1 - OUR FIRST PRIORITY – SAFETY

For your own protection and that of your co workers, please pay particular attention to this section. These safety precautions are intended to protect operators and equipment from risk of physical harm and damage that may arise from the operation and maintenance of this water treatment system. The following table summarizes the symbols used in this manual to highlight areas of risk. These warnings are not intended to be exhaustive and the operator and maintenance staff are expected to execute due diligence in carrying out their work on this system. When in doubt please ask for assistance or advice.

Symbol	Description
	Alerts operators to items that if not followed will result in severe injury or death.
	Alerts operators to items that if not followed can result in severe injury or death.
	Alerts operators to items that if not followed may result in a minor or major injury.
	Alerts operators to items that if not followed may result in damage to equipment or property.

7.2 - PREAMBLE AND GENERAL PRECAUTIONS

Please ensure to read and understand the entire operational and maintenance manual thoroughly. Ensure all assembly, operation, maintenance or inspection instructions described in this manual are followed before using any devices included with this plant. A device can be a valve, instrument, equipment item or any other physical or software component required in the operation of this water plant. Misuse of devices or failure to follow the instructions described in this manual may result in death, serious personal injury and/or damage to property. Failure to read the entire manual before using any device included in the scope of this project constitutes a misuse.

The plant operator is responsible to inspect each device before using it. Only use the device if it passes inspection. Always use the device as described by the original manufacturer of the device. Do not use any malfunctioning device. Keep by standers away from device during use.

It is up to the operator to use common sense when operating any device. A moment of inattention while operating a device can cause personal injury or death to the operator or to any by standers and/or damage to property. Keep hands, clothes, loose jewelry from being caught in moving parts. Do not exceed stated weight limits for any device used for lifting.

Do not modify any device in any way other than that described in vendor instruction manuals unless prior written approval of H_2O Innovation Inc. is obtained. Unauthorized modifications to a device may void the warranty and might make the device unsafe to use.

In no event shall H_2O Innovation Inc. be liable for any indirect, incidental or consequential damages resulting from the use of devices in this plant. This disclaimer applies before, during and after use of the device, which include, without limitation, assembly, inspection, use and/or storage. No warranties (express, implied, or statutory) are made in connection with this operational and maintenance manual.

BY REFERRING TO, OR OTHERWISE EMPLOYING, THIS OPERATIONAL AND MAINTENANCE MANUAL, THE OPERATOR, USER OR OWNER OF THE PLANT AGREES TO DEFEND, PROTECT, INDEMNIFY, AND HOLD H_2O INNOVATION INC., ITS AFFILIATES, SUBSIDIARIES, SUCCESSORS, ASSIGNS, DIRECTORS, OFFICERS, AGENTS, AND EMPLOYEES HARMLESS FROM AND AGAINST ALL CLAIMS, LOSSES, EXPENSES, DAMAGES AND LIABILITIES, DIRECT, INCIDENTAL, OR CONSEQUENTIAL, ARISING FROM ACCEPTANCE OR USE OF THIS MANUAL, INCLUDING LOSS OF PROFITS AND REASONABLE ATTORNEY'S FEES, WHICH MAY ARISE OUT OF THE ACCEPTANCE OR USE OR ALLEGED USE OF THIS MANUAL, IT BEING THE INTENT OF THIS PROVISION AND OF THE OPERATOR, USER OR OWNER TO ABSOLVE AND PROTECT H_2O INNOVATION INC., ITS AFFILIATES, SUBSIDIARIES, SUCCESSORS, ASSIGNS, DIRECTORS, OFFICERS, AGENTS, AND EMPLOYEES FROM ANY AND ALL LOSS RELATING IN ANY WAY TO THIS OPERATIONAL AND MAINTENANCE MANUAL INCLUDING THOSE RESULTING FROM ITS OWN NEGLIGENCE.

7.3 - SAFETY STANDARDS

Local safety regulations and standards take precedence over the recommendations discussed here only when they are stricter or more onerous than this manual. The operators and plant owners are expected to follow their local standards and augment those with the information provided in this manual. Also, standards evolve over time and the onus is on the plant operations staff to maintain current certifications and be familiar with the most recent requirements, particularly those related to safety.

7.4 - PERSONAL PROTECTIVE EQUIPMENT (PPE)

Personal Protective Equipment (PPE) is required to operate this system safely. The following items should be readily available and properly fitted for operators of this system:

1. Hardhat
2. Safety boots
3. Safety glasses with side shields
4. Face shields
5. Rubber aprons
6. Ear plugs
7. Fall protection equipment (lanyard, harness)
8. Housekeeping equipment (brooms, mops, spill kits, rags)

7.5 - KEY SAFETY WARNINGS

Please pay particular attention to this section. These safety precautions are intended to protect operators from risk of physical harm and damage that may arise from the operation and maintenance of this water treatment system.

Do not mix sodium hypochlorite solution with any acidic solution. This mixture will generate toxic chlorine gas which is lethal. Common acidic solutions include citric acid, sulfuric acid, hydrochloric acid, sodium bisulfite (but are not limited to these).

Membrane modules and piping is under pressure (or vacuum). Ensure that equipment and piping networks are fully de pressurized to atmospheric pressure before servicing. Energy release, particularly for compressible fluids, can cause serious personal injury or death.

Working on or servicing electrical equipment or mechanical equipment powered by electricity can cause severe injury or death if the electrical source is not completely disconnected and locked out by the service person. Following a documented lock out, tag out program is highly recommended for working on equipment in this system.

Air (or other gasses) trapped in PVC piping or conveyed by PVC piping can cause severe injury or death. PVC material shatters if the piping is subject to abnormal stresses when compressed air is present inside. Pieces of piping become projectiles in this case. Ensure air is completely bled with non compressible fluids from all systems that use PVC piping.

The cleaning of membranes involves the use of strong chemicals. When handling chemicals wear appropriate PPE (face shields, full length rubber gloves, rubber apron, safety glasses with side shields) as recommended in the MSDS for each respective chemical. The MSDS will also provide treatment recommendation in the case of exposure to the chemicals. Failure to follow MSDS recommendations can result in serious injury or death.

The cleaning chemical sodium hypochlorite generates chlorine gas over time that presents a health and safety concern and is highly corrosive to humans and equipment surfaces. Appropriate ventilation is required in areas where sodium hypochlorite solutions are exposed to the operator's air space or equipment that can be damaged by corrosion.

Membranes are typically shipped in a preservative solution. Ensure appropriate PPE (face shields, full length rubber gloves, rubber apron, safety glasses with side shields) as recommended by the membrane manufacturer are worn. The MSDS for the preservative solution will also provide treatment recommendation in the case of exposure to the chemicals. Failure to follow MSDS recommendations can result in serious injury or death.

Membrane modules are heavy and should not be manipulated by hand. Use properly designed lifting equipment for installing and removing modules into membrane racks. A falling module can result in serious injury or death.

Do not lift skids from equipment or piping mounted on the skid. Doing so may result in injury or death for workers involved in the operation or damage to the components mounted on the skid.

Exposure to moderate noise levels can lead to long term hearing damage. Exposure to high noise levels, even for short durations, can cause immediate hearing damage. When the possibility of exposure to such noise levels is present {particularly around air blowers, compressors, air release devices} use appropriate hearing protection.

This plant includes rotating equipment. Blowers, compressors, pumps and valves all have components that turn with high energy. Before operating equipment with rotating components or pinch points, ensure that all shields, guards, and emergency kill switches are in place and operational. Rotating parts can catch clothing, fingers, or tools and cause serious injury, death or equipment damage.

Ultraviolet light is often used for disinfection in water treatment systems. Do not look directly at light sources or expose skin to the light as it can burn both eyes and skin.

Maintaining strict cross connection controls are required to protect public health and maintain water quality. This system may be outfitted with automated cross connection prevention systems, however, the proper operation of these needs to be routinely verified by operations staff. Failure of cross connection prevention systems can result in release of chemical or untreated water into the public water system.

When alternating between cleaning chemicals (particularly between an acid and sodium hypochlorite), ensure that the lines and tanks are fully rinsed before using the next chemical. The use of higher quality product water for rinsing is recommended (rather than feed water). Failure to rinse systems adequately can result in adverse chemical reactions. Refer to other warnings in this section.

Operating equipment can get hot. Also, heated chemical solutions are used for cleaning membranes and equipment or piping may not be protected with insulation. To avoid burns, please use caution when touching operating equipment and piping in the plant. Permanent operator protection insulation or guarding is typically required for components that can be warmer than 45°C.

When cleaning membranes, strictly follow the procedures described in the membrane manual and document cleans appropriately on log sheets. Otherwise damage may occur to the modules which can negatively affect the membrane performance and the membrane warranty.

Membrane modules can be stored in water and not used for short periods of time. If they are to be left for longer than 4 days, follow procedures listed in the membrane module manufacturer's manual. Failure to follow recommendations from the manufacture can result in membrane damage.

During membrane integrity tests (MIT) on ultra filtration membrane systems, the compressed air used must be clean, dry, and free of oil. Do not exceed the maximum recommended testing pressures.

During construction, maintenance, or any other work performed directly above open tanks that feed membrane systems (particularly upstream of the membranes and downstream of the strainers), ensure that foreign debris (for example; pipe turnings, paint chips) do not fall into the tank.

Operating the system using manual controls introduces a risk of equipment damage. It is highly recommended that the system is monitored carefully and with an operator present if manual controls or partial manual controls are used. Refer to the section on manual controls for more information.

7.6 - SAFETY GUIDELINES

There are a number of general guidelines that can greatly improve the safety of operators and visitors to a water treatment plant:

1. **Personal Protective Equipment (PPE)**: Wear the appropriate PPE for the job or task being conducted which applies to bystanders as well. Generally speaking, when in the plant environment, safety boots and safety glasses are highly recommended as a minimum.
2. **Housekeeping**: Maintaining a clean plant is key for minimizing the risk of accidents. Ensure that all tools and loose items are placed in the correct location and that spills are quickly cleaned up.
3. **Routine maintenance**: Maintaining equipment in good running order and conducting preventative maintenance regularly can help prevent situations where safety risks are elevated.
4. **Personal hygiene**: With any water treatment system pathogens can be concentrated in the waste stream. Regular personal hygiene (like washing hands) is important to prevent illness and spread of contamination. If operators are exposed to feed water, concentrate or other water not suitable for human consumption, eyes should be immediately rinsed at an eye wash station and exposed skin should be cleaned thoroughly with soap and warm water, particularly before eating, drinking or smoking.
5. **Vaccinations**: Due to pathogenic risk at water treatment facilities, it is recommended that operators and maintenance staff be vaccinated against tetanus and Hepatitis A and Hepatitis B. Seek medical advice from a licensed physician before exposure to water at the plant and also if you may have been exposed to potential sources of biological hazards. This is particularly important in wastewater systems.
6. **Fall protection**: Although pressurized membrane systems do not require significant tankage, the risk of falling into a tank or off an elevated platform can be present. A fall of any height can hurt operators and maintenance staff. Follow the local work environment regulations with respect to falls and fall prevention. Safety harnesses, lanyards and engineered anchor points may be required. Note that fall arrest and fall restraint are distinct and in general fall restraint is preferred due to the lower risk of injury.
7. **Equipment specific safety recommendations**: Refer to the provided equipment safety manuals. These instructions manuals must be followed for safe operation and maintenance of the system as a whole.
8. **Chemical showers and eyewash stations**: Safety showers and eyewash systems are typically installed within proximity of chemical systems. Operators need to be trained in their effective use and monitoring systems installed such that assistance can be provided in the case that somebody uses one of these systems.
9. **Chemical spills**: Spill clean up kits and neutralization chemicals should be readily available and operators trained in how to use these systems.
10. **High pressure equipment**: Some pumps, compressors and blowers are capable of generating very high pressures which creates the risk of rupture or major damage if safety devices are bypassed or not maintained. Pressure relief valves should be checked regularly, and tubing or piping used to convey pressurized fluids, such as actuated valve air lines, should be regularly inspected for cracks and damage.

11. **Material Safety Data Sheets (MSDS)**: MSDS' need to be present and available for quick reference for each chemical in use in the plant and operators should read these before doing any work involving these chemicals. The supplier of the chemical is responsible for providing the end user with MSDS sheets. Each chemical in use in the plant must have an MSDS present. All chemical containers must be labeled accurately with the chemical name such that the chemical can be readily cross referenced with the MSDS.
12. **Lighting**: Ensuring that work areas (internal and external) are well lit is important for minimizing risks to operators and also for ease of operations and maintenance.
13. **Confined spaces**: Many workplaces contain areas that are confined spaces. While they are not necessarily designed for people, they are large enough for workers to enter and perform certain jobs. A confined space also has limited or restricted means for entry or exit and is not designed for continuous occupancy. Confined spaces include, but are not limited to, tanks, vessels, silos, storage bins, hoppers, vaults, pits, manholes, tunnels, equipment housings, ductwork, pipelines, etc. OSHA uses the term "permit required confined space" to describe a confined space that has one or more of the following characteristics: contains or has the potential to contain a hazardous atmosphere; contains a material that has the potential to engulf an entrant; has walls that converge inward or floors that slope downward and taper into a smaller area which could trap or asphyxiate an entrant; or contains any other recognized safety or health hazard, such as unguarded machinery, exposed live wires, or heat stress. Ensure workers are trained to recognize confined spaces and that only trained personnel are permitted to enter confined spaces when the appropriate safeguards are in place. A means of worker extraction and atmosphere control are normally used when workers are exposed to confined spaces.
14. **Lock-out, tag-out (LOTO)**: There are guidelines that address the practices and procedures necessary to disable machinery or equipment, thereby preventing the release of hazardous energy while employees are performing service and maintenance activities. Their standards outline measures for controlling hazardous energies — electrical, mechanical, hydraulic, pneumatic, chemical, thermal, and other energy sources. Employees servicing or maintaining machines or equipment may be exposed to serious physical harm or death if hazardous energy is not properly controlled. A documented LOTO system is highly recommended for all operating water treatment facilities.
15. **Safety culture**: An environment where safety discussions happen before all maintenance operations, where operators are free to raise safety concerns without retribution and one where safety reports are openly shared is highly recommended for this water treatment plant. Safety should be built into all routine work and standard operating procedures at the plant and all maintenance work should be prefaced with a discussion on safety for the work at hand. This builds a culture where safety is a top priority and helps ensure all workers go home healthy at the end of their day.

7.7 - MATERIAL SAFETY DATA SHEETS

7.7.1 - SODIUM HYDROXIDE

ConnectingChemistry

BRENNTAG

SAFETY DATA SHEET according to Regulation (EC) No. 1907/2006

SODIUM HYDROXIDE SOLUTION 25% INCL 32KG

Version 7.0 Print Date 25.12.2020

Revision date / valid from 23.12.2020

SECTION 1: Identification of the substance/mixture and of the company/undertaking

1.1. Product identifier

Trade name	:	SODIUM HYDROXIDE SOLUTION 25% INCL 32KG

1.2. Relevant identified uses of the substance or mixture and uses advised against

Use of the Substance/Mixture	:	Identified use: See table in front of appendix for a complete overview of identified uses.
Uses advised against	:	At this moment we have not identified any uses advised against

1.3. Details of the supplier of the safety data sheet

Company	:	Brenntag Nordic AB Hyllie Stationstorg 31 SE 215 32 Malmö
Telephone	:	+46 (0)40-28 73 00
Telefax	:	+46 (0)40-93 7015
E-mail address	:	SDS.SE@brenntag-nordic.com
Responsible/issuing person	:	Environment & Quality

1.4. Emergency telephone number

Emergency telephone number	:	In case of personal injury call: Denmark: 82 12 12 12 Giftlinien, Bispebjerg Hospital Finland: Poison Information Centre: (09) 471 977 (direct) or (09) 47 11 (exchange), open 24h/day Norway: 22 59 13 00 Giftinformasjonen (døgnåpent) Sweden: +46-8-331231 Giftinformationscentralen (24 hour service) Outside these countries: Please call your local emergency services

SECTION 2: Hazards identification

2.1. Classification of the substance or mixture

Classification according to Regulation (EC) No 1272/2008

REGULATION (EC) No 1272/2008

Hazard class	Hazard category	Target Organs	Hazard statements
Corrosive to metals	Category 1	---	H290
Skin corrosion	Category 1A	---	H314
Serious eye damage	Category 1	---	H318

For the full text of the H-Statements mentioned in this Section, see Section 16.

Most important adverse effects

Human Health : The product causes burns of eyes, skin and mucous membranes.

Physical and chemical hazards : Gives off hydrogen by reaction with base metals (zinc, aluminium).

Potential environmental effects : Harmful effects to aquatic organisms also due to pH-shift.

2.2. Label elements

Labelling according to Regulation (EC) No 1272/2008

Hazard symbols :

Signal word : Danger

Hazard statements : H290 May be corrosive to metals.
H314 Causes severe skin burns and eye damage.

Precautionary statements

Prevention : P280 Wear protective gloves/ protective clothing/ eye protection/ face protection.

Response : P301 + P330 + P331 IF SWALLOWED: Rinse mouth. Do NOT induce vomiting.
P303 + P361 + P353 IF ON SKIN (or hair): Take off immediately all contaminated clothing. Rinse skin with water/ shower.
P304 + P340 + P310 IF INHALED: Remove person to fresh air and keep comfortable for breathing. Immediately call a POISON CENTER/doctor.
P305 + P351 + P338 IF IN EYES: Rinse cautiously with water for several minutes. Remove contact lenses, if present and easy to do. Continue

	rinsing.
P390	Absorb spillage to prevent material damage.

Hazardous components which must be listed on the label:

- sodium hydroxide

2.3. Other hazards

For Results of PBT and vPvB assessment see section 12.5.

SECTION 3: Composition/information on ingredients

3.2. Mixtures

Chemical nature : Aqueous solution

Hazardous components	Amount [%]	Classification (REGULATION (EC) No 1272/2008)	
		Hazard class / Hazard category	Hazard statements
sodium hydroxide			
Index-No. : 011-002-00-6 CAS-No. : 1310-73-2 EC-No. : 215-185-5 EU REACH-Reg. No. : 01-2119457892-27-xxxx	>= 25 - <= 30	Met. Corr.1 Skin Corr.1A Eye Dam.1	H290 H314 H318

For the full text of the H-Statements mentioned in this Section, see Section 16.

SECTION 4: First aid measures

4.1. Description of first aid measures

General advice : Take off all contaminated clothing immediately.

If inhaled : In case of accident by inhalation: remove casualty to fresh air and keep at rest. If breathing is irregular or stopped, administer artificial respiration. Call a physician immediately.

In case of skin contact : Call a physician immediately. Wash off immediately with soap and plenty of water.

In case of eye contact : Rinse immediately with plenty of water, also under the eyelids, for at least 15 minutes. Consult an eye specialist immediately. Go to an ophthalmic hospital if possible.

If swallowed	: Clean mouth with water and drink afterwards plenty of water. Never give anything by mouth to an unconscious person. Do NOT induce vomiting. Call a physician immediately.

4.2. Most important symptoms and effects, both acute and delayed

Symptoms	: See Section 11 for more detailed information on health effects and symptoms.
Effects	: Extremely corrosive and destructive to tissue. If ingested, severe burns of the mouth and throat, as well as a danger of perforation of the oesophagus and the stomach. See Section 11 for more detailed information on health effects and symptoms.

4.3. Indication of any immediate medical attention and special treatment needed

Treatment	: Treat symptomatically.

SECTION 5: Firefighting measures

5.1. Extinguishing media

Suitable extinguishing media	:	Use extinguishing measures that are appropriate to local circumstances and the surrounding environment.
Unsuitable extinguishing media	:	High volume water jet

5.2. Special hazards arising from the substance or mixture

Specific hazards during firefighting	:	Incomplete combustion may form toxic pyrolysis products.
Hazardous combustion products	:	The formation of caustic fumes is possible.

5.3. Advice for firefighters

Special protective equipment for firefighters	:	In the event of fire, wear self-contained breathing apparatus.Wear appropriate body protection (full protective suit)
Specific extinguishing methods	:	Control smoke with water spray.
Further advice	:	Collect contaminated fire extinguishing water separately. This must not be discharged into drains.

SECTION 6: Accidental release measures

6.1. Personal precautions, protective equipment and emergency procedures

Personal precautions	: Keep away unprotected persons. Use personal protective

equipment. Ensure adequate ventilation. Avoid contact with the skin and the eyes. Do not breathe vapours or spray mist.

6.2. Environmental precautions

Environmental precautions	:	Do not flush into surface water or sanitary sewer system. Avoid subsoil penetration. If the product contaminates rivers and lakes or drains inform respective authorities. If material reaches soil inform authorities responsible for such cases.

6.3. Methods and materials for containment and cleaning up

Methods and materials for containment and cleaning up	:	Absorb with liquid-binding material (sand, diatomite, acid binders, universal binders). Keep in suitable, closed containers for disposal.
	:	Use mechanical handling equipment. Keep in suitable, closed containers for disposal.
Further information	:	Treat recovered material as described in the section "Disposal considerations".

6.4. Reference to other sections

See Section 1 for emergency contact information.
See Section 8 for information on personal protective equipment.
See Section 13 for waste treatment information.

SECTION 7: Handling and storage

7.1. Precautions for safe handling

Advice on safe handling	:	Keep container tightly closed. Ensure adequate ventilation. Use personal protective equipment. Avoid contact with skin, eyes and clothing. Do not breathe vapours or spray mist. Use respirator with appropriate filter if vapours or aerosol are released. Emergency eye wash fountains and emergency showers should be available in the immediate vicinity.
Hygiene measures	:	Keep away from food, drink and animal feedingstuffs. Smoking, eating and drinking should be prohibited in the application area. Wash hands before breaks and at the end of workday. Take off all contaminated clothing immediately.

7.2. Conditions for safe storage, including any incompatibilities

Requirements for storage areas and containers	:	Store in original container. Suitable materials for containers: Stainless steel; polyethylene; Polypropylene; Polyvinylchloride; Unsuitable materials for containers: Aluminium; Zinc; Copper
Advice on protection against fire and explosion	:	Normal measures for preventive fire protection.
Further information on storage conditions	:	Keep tightly closed in a dry and cool place. Keep in a well-ventilated place.

Advice on common storage	:	Keep away from food, drink and animal feedingstuffs.

7.3. Specific end use(s)

Specific use(s)	:	No information available.

SECTION 8: Exposure controls/personal protection

8.1. Control parameters

Component:	sodium hydroxide	CAS-No. 1310-73-2

Derived No Effect Level (DNEL)/Derived Minimal Effect Level (DMEL)

DNEL
Workers, Long-term - local effects, Inhalation : 1,0 mg/m3

DNEL
Consumers, Long-term - local effects, Inhalation : 1,0 mg/m3

Predicted No Effect Concentration (PNEC)

No PNEC value was derived. :

Other Occupational Exposure Limit Values

Sweden. Occupational Exposure Limit Values, as amended, Time Weighted Average (TWA):, Inhalable dust.
1 mg/m3

Sweden. Occupational Exposure Limit Values, as amended, Short Term Exposure Limit, Inhalable dust.
2 mg/m3

8.2. Exposure controls

Appropriate engineering controls

Refer to protective measures listed in sections 7 and 8.

Personal protective equipment

Respiratory protection

Advice	:	In case of brief exposure or low pollution use breathing filter apparatus.

Respiratory protection complying with EN 141.
In case of intensive or longer exposure use self-contained breathing apparatus.

Hand protection

Advice	:	Wear suitable gloves. The glove material has to be impermeable and resistant to the product / the substance / the preparation. Take note of the information given by the producer concerning permeability and break through times, and of special workplace conditions (mechanical strain, duration of contact). Protective gloves should be replaced at first signs of wear.
Material	:	Natural Rubber
Break through time	:	>= 8 h
Glove thickness	:	0,5 mm
Material	:	polychloroprene
Break through time	:	>= 8 h
Glove thickness	:	0,5 mm
Material	:	Nitrile rubber
Break through time	:	>= 8 h
Glove thickness	:	0,35 mm
Material	:	butyl-rubber
Break through time	:	>= 8 h
Glove thickness	:	0,5 mm
Material	:	Fluorinated rubber
Break through time	:	>= 8 h
Glove thickness	:	0,4 mm
Material	:	Polyvinylchloride
Break through time	:	>= 8 h
Glove thickness	:	0,5 mm

Eye protection

Advice	:	Safety goggles Face-shield

Skin and body protection

Advice	:	Impervious clothing Chemical resistant apron

Environmental exposure controls

General advice	:	Do not flush into surface water or sanitary sewer system. Avoid subsoil penetration. If the product contaminates rivers and lakes or drains inform respective authorities. If material reaches soil inform authorities responsible for such cases.

SECTION 9: Physical and chemical properties

9.1. Information on basic physical and chemical properties

Form	:	liquid
Colour	:	colourless
Odour	:	odourless
Odour Threshold	:	Not applicable
pH	:	14 - 15 (100 %)((calculated))(formulated product)
Melting point/range	:	-17 °C 10% solution 12 °C 50% solution
Boiling point/boiling range	:	105 °C 10% solution 145 °C 50% solution
Flash point	:	Not applicable
Evaporation rate	:	Not applicable
Flammability (solid, gas)	:	Not applicable
Upper explosion limit	:	Not applicable
Lower explosion limit	:	Not applicable
Vapour pressure	:	21 hPa (20 °C) 12% solution
Relative vapour density	:	no data available
Density	:	ca. 1,0538 g/cm3 (20 °C) 5% solution ca. 1,175 g/cm3 (20 °C) 15% solution ca. 1,274 g/cm3 (20 °C) 25% solution ca. 1,34 g/cm3 (20 °C) 30% solution ca. 1,38 g/cm3 (20 °C) 35% solution ca. 1,48 g/cm3 (20 °C) 45% solution ca. 1,525 g/cm3 (20 °C) 50% solution ca. 1,2191 g/cm3 (20 °C) 20% solution
Water solubility	:	1090 g/l (20 °C)
Partition coefficient: n-octanol/water	:	no data available

Auto-ignition temperature	:	no data available
Thermal decomposition	:	no data available
Viscosity, dynamic	:	79 mPa.s (20 °C) 50% solution
Explosivity	:	Product is not explosive.
Oxidizing properties	:	no data available

9.2. Other information

Corrosion to metals	:	Corrosive to metals

SECTION 10: Stability and reactivity

10.1. Reactivity

Advice : No decomposition if stored and applied as directed.

10.2. Chemical stability

Advice : Stable under recommended storage conditions.

10.3. Possibility of hazardous reactions

Hazardous reactions : Corrosive in contact with metals Gives off hydrogen by reaction with base metals (zinc, aluminium). Reacts exothermically with water. Reacts exothermic with acids.

10.4. Conditions to avoid

Conditions to avoid : Heat, flames and sparks.
Thermal decomposition : no data available

10.5. Incompatible materials

Materials to avoid : Materials to avoid: Acids, Light metals, Alcohols, Halogenated hydrocarbon

10.6. Hazardous decomposition products

Hazardous decomposition products : hydrogen

SECTION 11: Toxicological information

11.1. Information on toxicological effects

Data for the product
Acute toxicity
Oral

Cause serious burns with severe pains, vomiting, pains in the stomach, possibly chock and damaged kidneys. The burn may occur even if only small amounts have been swallowed.

Inhalation

Inhalation may cause pain in respiratory system, sneezing, coughing and difficulty in breathing. Risk for pulmonary edema by high concentration.

Dermal

For this mixture is no data available.
Please find this information in the listing of the component/components below in this section.

Irritation

Skin

Result : May cause serious corrosive damage with deep slow-healing ulcer. Even dilute solution burns. First the skin feels slippery-later pain, blistering & ulcer may occur.

Eyes

Result : Splashes in the eyes may cause painful burns, which may result in permanent damage to the eyes.

Sensitisation

no data available

CMR effects

CMR Properties

Carcinogenicity : no data available

Mutagenicity : no data available

Reproductive toxicity : no data available

Specific Target Organ Toxicity

Single exposure

no data available

Repeated exposure

no data available

Other toxic properties
Repeated dose toxicity
no data available
Aspiration hazard
no data available

Component:	**sodium hydroxide**	**CAS-No. 1310-73-2**
Acute toxicity		
Oral		
No valid data available.		
Inhalation		
No valid data available.		
Dermal		
No valid data available.		
Dermal		
No valid data available.		
Irritation		
Skin		
Result	:	Very corrosive (Rabbit) (No guideline followed) Corrosive
Eyes		
Result	:	corrosive effects (Rabbit; Test substance: 10% solution) (OECD Test Guideline 405)Equivalent or similar to OECD Guideline
Sensitisation		
Result	:	not sensitizing (human) (No guideline followed)Patch test on human volunteers did not demonstrate sensitisation properties.

CMR effects		
CMR Properties		
Carcinogenicity	:	No experimental references for cancerogenity available.
Mutagenicity	:	In vitro tests did not show mutagenic effects In vivo tests did not show mutagenic effects
Teratogenicity	:	no data available
Reproductive toxicity	:	Not expected to impair fertility.

Specific Target Organ Toxicity		
Single exposure		
Remarks	:	The substance or mixture is not classified as specific target organ toxicant, single exposure.
Repeated exposure		
Remarks	:	The substance or mixture is not classified as specific target organ toxicant, repeated exposure.

Other toxic properties
Aspiration hazard
Not applicable,

SECTION 12: Ecological information

12.1. Toxicity

Component:	sodium hydroxide	CAS-No. 1310-73-2
Acute toxicity		
Fish		
LC50	:	125 mg/l (Gambusia affinis; 96 h) (No guideline followed)
LC50		145 mg/l (Poecilia reticulata; 24 h) (No guideline followed)
Toxicity to daphnia and other aquatic invertebrates		
EC50	:	40,4 mg/l (Ceriodaphnia (water flea); 48 h) (No guideline followed)

algae		
	:	no data available

Bacteria		
EC50	:	22 mg/l (Photobacterium phosphoreum; 15 min) (EPS 1/RM/24)

12.2. Persistence and degradability

Component:	sodium hydroxide	CAS-No. 1310-73-2
Persistence and degradability		
Persistence		
Result	:	no data available
Biodegradability		
Result	:	The methods for determining the biological degradability are not applicable to inorganic substances.

12.3. Bioaccumulative potential

Component:	sodium hydroxide	CAS-No. 1310-73-2
Bioaccumulation		
Result	:	Does not bioaccumulate.

12.4. Mobility in soil

Component:	sodium hydroxide	CAS-No. 1310-73-2
Mobility		
Water	:	The product is mobile in water enviroment.

12.5. Results of PBT and vPvB assessment

Component:	sodium hydroxide	CAS-No. 1310-73-2
Results of PBT and vPvB assessment		
Result	:	The PBT or vPvB criteria of Annex XIII to the REACH Regulation does not apply to inorganic substances.

12.6. Other adverse effects

Component:	sodium hydroxide	CAS-No. 1310-73-2
	Additional ecological information	

Result : Harmful effects to aquatic organisms due to pH-shift.
Neutralization is normally necessary before waste water is discharged into water treatment plants.
Do not flush into surface water or sanitary sewer system.

SECTION 13: Disposal considerations

13.1. Waste treatment methods

Product : Eliminate waste in conditions authorized by the regulations. Store waste in containers provided for this purpose. Do not dump in drains, water sheets or the ground.

Contaminated packaging : Empty contaminated packagings thoroughly. They can be recycled after thorough and proper cleaning. If recycling is not practicable, dispose of in compliance with local regulations.

European Waste Catalogue Number : No waste code according to the European Waste Catalogue can be assigned for this product, as the intended use dictates the assignment. The waste code is established in consultation with the regional waste disposer.

SECTION 14: Transport information

14.1. UN number

1824

14.2. UN proper shipping name

ADR : SODIUM HYDROXIDE SOLUTION
RID : SODIUM HYDROXIDE SOLUTION
IMDG : SODIUM HYDROXIDE SOLUTION

14.3. Transport hazard class(es)

ADR-Class	: 8
(Labels; Classification Code; Hazard Identification Number; Tunnel restriction code)	8; C5; 80; (E)
RID-Class	: 8
(Labels; Classification Code; Hazard Identification Number)	8; C5; 80
IMDG-Class	: 8
(Labels; EmS)	8; F-A, S-B

14.4. Packaging group

ADR : II
RID : II
IMDG : II

14.5. Environmental hazards

Environmentally hazardous according to ADR : no
Environmentally hazardous according to RID : no
Marine Pollutant according to IMDG-Code : no

14.6. Special precautions for user

Not applicable.

14.7. Transport in bulk according to Annex II of MARPOL 73/78 and the IBC Code

IMDG : Not applicable.

SECTION 15: Regulatory information

15.1. Safety, health and environmental regulations/legislation specific for the substance or mixture

Data for the product

EU. REACH, Annex XVII, Marketing and Use Restrictions (Regulation 1907/2006/EC)	:	Point Nos.: , 3; Listed
EU. Directive 2012/18/EU (SEVESO III) Annex I	:	; The substance/mixture does not fall under this legislation.
Other regulations	:	Only persons, who are thoroughly instructed in the dangerous properties and the necessary safety precautions of the substance, are allowed to work with it. Exposure limits in accordance to local regulations As a principal rule, persons under 18 years are not allowed to work with this substance.

Component: sodium hydroxide CAS-No. 1310-73-2

EU. Regulation EU No. 649/2012 concerning the export and import of dangerous chemicals	:	; The substance/mixture does not fall under this legislation.

EU. Regulation No 1451/2007 [Biocides], Annex I, OJ (L 325)	:	EC Number: , 215-185-5; Listed
EU. Regulation No. 1223/2009 on cosmetic products, Annex III: List of Restricted Substances in Cosmetic Products	:	Maximum concentration in ready for use preparation: 2 %; Hair straightener: General use; See the text of the regulation for applicable exceptions or provisions. pH < 12,7.; pH adjuster for depilatories; See the text of the regulation for applicable exceptions or provisions. Maximum concentration in ready for use preparation: 4,5 %; Hair straightener: Professional use; See the text of the regulation for applicable exceptions or provisions. pH < 11.; Uses as pH adjuster other than for depilatories; See the text of the regulation for applicable exceptions or provisions. Maximum concentration in ready for use preparation: 5 %; Nail cuticle solvent; See the text of the regulation for applicable exceptions or provisions.

Notification status sodium hydroxide:

Regulatory List	Notification	Notification number
AICS	YES	
DSL	YES	
EINECS	YES	215-185-5
ENCS (JP)	YES	(1)-410
IECSC	YES	
ISHL (JP)	YES	(1)-410
KECI (KR)	YES	97-1-136
KECI (KR)	YES	KE-31487
NZIOC	YES	HSR001547
PICCS (PH)	YES	
TSCA	YES	

15.2. Chemical safety assessment

A Chemical Safety Assessment has been carried out for this substance.

SECTION 16: Other information

Full text of H-Statements referred to under sections 2 and 3.

H290	May be corrosive to metals.
H314	Causes severe skin burns and eye damage.
H318	Causes serious eye damage.

Abbreviations and Acronyms

BCF	bioconcentration factor
BOD	biochemical oxygen demand
CAS	Chemical Abstracts Service
CLP	Classification, Labelling and Packaging
CMR	carcinogenic, mutagenic or toxic to reproduction
COD	chemical oxygen demand
DNEL	derived no-effect level
EINECS	European Inventory of Existing Commercial Chemical Substances
ELINCS	European List of Notified Chemical Substances
GHS	Globally Harmonized System of Classification and Labelling of Chemicals
LC50	median lethal concentration
LOAEC	lowest observed adverse effect concentration
LOAEL	lowest observed adverse effect level
LOEL	lowest observed effect level
NLP	no-longer polymer
NOAEC	no observed adverse effect concentration
NOAEL	no observed adverse effect level
NOEC	no observed effect concentration
NOEL	no observed effect level
OECD	Organisation for Economic Cooperation and Development
OEL	occupational exposure limit
PBT	persistent, bioaccumulative and toxic
REACH Auth. No.:	REACH Authorisation Number
REACH AuthAppC. No.	REACH Authorisation Application Consultation Number
PNEC	predicted no-effect concentration
STOT	specific target organ toxicity
SVHC	substance of very high concern
UVCB	substance of unknown or variable composition, complex reaction products or biological materials
vPvB	very persistent and very bioaccumulative

Further information

Key literature references and sources for data	:	Supplier information and data from the "Database of registered substances" of the European Chemicals Agency (ECHA) were used to create this safety data sheet.
Methods used for product classification	:	The classification for human health, physical and chemical hazards and environmental hazards were derived from a combination of calculation methods and if available test data.
Hints for trainings	:	The workers have to be trained regularly on the safe handling of the products based on the information provided in the Safety Data Sheet and the local conditions of the workplace. National

regulations for the training of workers in the handling of hazardous materials must be adhered to.

Other information : The information provided in this Safety Data Sheet is correct to our knowledge at the date of its revision. The information given only describes the products with regard to safety arrangements and is not to be considered as a warranty or quality specification and does not constitute a legal relationship.

The information contained in this Safety Data Sheet relates only to the specific material designated and may not be valid for such material used in combination with any other material or in any process, unless specified in the text.

|| Indicates updated section.

SODIUM HYDROXIDE SOLUTION 25% INCL 32KG

No.	Short title	Main User Group (SU)	Sector of Use (SU)	Product Category (PC)	Process Category (PROC)	Environmental Release Category (ERC)	Article Category (AC)	Specified
1	Manufacture of substance - liquid	3	8	NA	1, 2, 3, 4, 8a, 8b, 9	1	NA	ES035
2	Industrial use	3	10	NA	1, 2, 3, 4, 5, 7, 8a, 8b, 9, 10, 13, 15, 19, 23, 24	2, 4, 6a, 6b, 7	NA	ES065
3	Professional use	22	10	NA	1, 2, 3, 4, 5, 8a, 8b, 9, 10, 11, 13, 15, 19, 23, 24	8a, 8b, 8d, 9a	NA	ES067
4	Consumer use	21	NA	20, 35, 39	NA	8a, 8b, 8d, 9a	NA	ES075

1. Short title of Exposure Scenario 1: Manufacture of substance - liquid		
Main User Groups	SU 3: Industrial uses: Uses of substances as such or in preparations at industrial sites	
Sectors of end-use	SU8: Manufacture of bulk, large scale chemicals (including petroleum products)	
Process categories	PROC1: Chemical production or refinery in closed process without likelihood of exposure or processes with equivalent containment conditions PROC2: Use in closed, continuous process with occasional controlled exposure PROC3: Manufacture or formulation in the chemical industry in closed batch processes with occasional controlled exposure or processes with equivalent containment condition PROC4: Use in batch and other process (synthesis) where opportunity for exposure arises PROC8a: Transfer of substance or preparation (charging/ discharging) from/ to vessels/ large containers at non-dedicated facilities PROC8b: Transfer of substance or preparation (charging/ discharging) from/ to vessels/ large containers at dedicated facilities PROC9: Transfer of substance or preparation into small containers (dedicated filling line, including weighing)	
Environmental Release Categories	ERC1: Manufacture of substances	
2.1 Contributing scenario controlling environmental exposure for: ERC1		
Product characteristics	Concentration of the Substance in Mixture/Article	Concentration of substance in product : 0% - 50%
Other given operational conditions affecting environmental exposure	Continuous exposure	
Technical conditions and measures at process level to prevent release Technical onsite conditions and measures to reduce or limit discharges, air emissions and releases to soil Organizational measures to prevent/limit release from the site	Application Area	Industrial use
	Water	Regular control of the pH value during introduction into open waters is required.,In general discharges should be carried out such that pH changes in receiving surface waters are minimised.,In general most aquatic organisms can tolerate pH values in the range of 6-9. This is also reflected in the description of standard OECD tests with aquatic organisms.,Risk management measures related to the environment aim to avoid discharging the substance into municipal wastewater or to surface water, in case such discharges are expected to cause significant pH changes.
Conditions and measures related to external treatment of waste for disposal	Disposal methods	Waste should be reused or discharged to the industrial wastewater and further neutralized if needed.
2.2 Contributing scenario controlling worker exposure for: PROC1, PROC2, PROC3, PROC4, PROC8a, PROC8b, PROC9		
Product characteristics	Concentration of the Substance in Mixture/Article	Concentration of substance in product : 0% - 50%
	Physical Form (at time of use)	liquid
Frequency and duration of use	Frequency of use	200 days/year
	Frequency of use	8 hours/day
Technical conditions and measures to control dispersion	Application Area	Industrial use
	Use closed systems or covering of open containers (e.g. screens)	

from source towards the worker	Transport over pipes, technical barrel filling/emptying of barrel with automatic systems (suction pumps etc.) Use of pliers, grip arms with long handles with manual use to avoid direct contact and exposure by splashes (no working over one's head)
Organisational measures to prevent /limit releases, dispersion and exposure	Application Area: Industrial use Replacing, where appropriated, manual processes by automated and/or closed processes. This would avoid irritating mists, sprayings and subsequent potential splashes. Workers in the risky process/areas identified should be trained a) to avoid to work without respiratory protection and b) to understand the corrosive properties and, especially, the respiratory inhalation effects and c) to follow the safety procedures instructed by the employer. The employer has also to ascertain that the required PPE is available
Conditions and measures related to personal protection, hygiene and health evaluation	Application Area: Industrial use In case of dust or aerosol formation: use respiratory protection with approved filter (P2) Wear chemically resistant gloves. material: butyl-rubber, PVC, polychloroprene with natural latex liner, material thickness: 0.5 mm, breakthrough time: >480 min material: nitrile-rubber, fluorinated rubber, material thickness: 0.35-0.4 mm, breakthrough time: > 480 min wear tightly fitting safety goggles, face–shield Wear suitable protective clothing, aprons, shield and suits If splashes are likely to occur: Rubber or plastic boots

3. Exposure estimation and reference to its source

Environment

The aquatic effect and risk assessment only deals with the effect on organisms/ecosystems due to possible pH changes related to OH- discharges, as the toxicity of the metal ion is expected to be insignificant compared to the (potential) pH effect. The high water solubility and very low vapour pressure indicates that the substance will be found predominantly in water. When the risk management measures related to the environment are implemented, there is no exposure to the activated sludge of a sewage treatment plant and there is no exposure to the receiving surface water. The sediment compartment is not considered, because it is not relevant for the substance. If emitted to the aquatic compartment, sorption to sediment particles will be negligible. Significant emissions to air are not expected due to the very low vapour pressure of the substance. If emitted to air as a water-based aerosol, the substance will be rapidly neutralised as a result of its reaction with CO2 (or acids). Significant emissions to the terrestrial environment are not expected. The sludge application route is not relevant for the emission to agricultural soil, as no sorption of the substance to particulate matter will occur in STPs/WWTPs. If emitted to soil, sorption to soil particles will be negligible. Depending on the buffer capacity of the soil, OH- will be neutralised in the soil pore water or the pH may increase. Bioaccumulation will not occur.

Workers

PROC1, PROC2, PROC3, PROC4, PROC8a, PROC8b, PROC9: ECETOC TRA worker v3

Contributing Scenario	Specific conditions	Exposure routes	Level of Exposure	RCR
PROC1, PROC2, PROC3, PROC4, PROC8a, PROC8b, PROC9	Modeled exposure data, very low vapour pressure, Without Local Exhaust Ventilation, without respiratory protection	Inhalation worker exposure	0,17mg/m³	0,17
PROC1, PROC2, PROC3, PROC4, PROC8a, PROC8b,	Measured exposure data, worst-case	Worker - inhalative, short-term - local	0,33mg/m³	0,33

PROC9				
PROC1, PROC2, PROC3, PROC4, PROC8a, PROC8b, PROC9	Measured exposure data, worst-case	Worker - inhalative, long-term - local	0,14mg/m³	0,14

This substance is corrosive. For the handling of corrosive substances and formulations, immediate dermal contacts occur only occasionally and it is assumed that repeated daily dermal exposure can be neglected. Dermal exposure to the substance was not quantified. The substance is not expected to be systemically available in the body under normal handling and use conditions. Systemic effects of NaOH after dermal or inhalation exposure are not expected to occur.

4. Guidance to Downstream User to evaluate whether he works inside the boundaries set by the Exposure Scenario

The DU works inside the boundaries set by the ES if either the proposed risk management measures as described above are met or the downstream user can demonstrate on his own that his operational conditions and implemented risk management measures are adequate. This has to be done by showing that they limit the inhalation and dermal exposure to a level below the respective DNEL (given that the processes and activities in question are covered by the PROCs listed above) as given below
If measured data are not available, the DU may make use of an appropriate scaling tool such as ECETOC TRA.
Important note: By demonstrating a safe use when comparing exposure estimates with the long-term DNEL, the acute DNEL is therefore also covered (according to R.14 guidance, acute exposure levels can be derived by multiplying long-term exposure estimates by a factor of 2).

Additional good practice advice beyond the REACH Chemical Safety Assessment

Local exhaust ventilation is not required but good practice.
General ventilation is good practice unless local exhaust ventilation

1. Short title of Exposure Scenario 2: Industrial use	
Main User Groups	SU 3: Industrial uses: Uses of substances as such or in preparations at industrial sites
Sectors of end-use	SU 10: Formulation [mixing] of preparations and/ or re-packaging (excluding alloys)
Process categories	PROC1: Chemical production or refinery in closed process without likelihood of exposure or processes with equivalent containment conditions PROC2: Use in closed, continuous process with occasional controlled exposure PROC3: Manufacture or formulation in the chemical industry in closed batch processes with occasional controlled exposure or processes with equivalent containment condition PROC4: Use in batch and other process (synthesis) where opportunity for exposure arises PROC5: Mixing or blending in batch processes for formulation of preparations and articles (multistage and/ or significant contact) PROC7: Industrial spraying PROC8a: Transfer of substance or preparation (charging/ discharging) from/ to vessels/ large containers at non-dedicated facilities PROC8b: Transfer of substance or preparation (charging/ discharging) from/ to vessels/ large containers at dedicated facilities PROC9: Transfer of substance or preparation into small containers (dedicated filling line, including weighing) PROC10: Roller application or brushing PROC13: Treatment of articles by dipping and pouring PROC15: Use as laboratory reagent PROC19: Hand-mixing with intimate contact and only PPE available PROC23: Open processing and transfer operations with minerals/ metals at elevated temperature PROC24: High (mechanical) energy work-up of substances bound in materials and/ or articles
Environmental Release Categories	ERC2: Formulation of preparations ERC4: Industrial use of processing aids in processes and products, not becoming part of articles ERC6a: Industrial use resulting in manufacture of another substance (use of intermediates) ERC6b: Industrial use of reactive processing aids ERC7: Industrial use of substances in closed systems
Activity	Because sodium hydroxide has so many uses so widely it can potentially be used in all sectors of end use described by the use descriptor system (SU1-24), NaOH is used for different purposes in a variety of industrial sectors

2.1 Contributing scenario controlling environmental exposure for: ERC2, ERC4, ERC6a, ERC6b, ERC7		
Activity	The environmental release categories mentioned above are assumed to be the most important ones but industrial environmental release categories could also be possible (ERC 1-12).	
Product characteristics	Concentration of the Substance in Mixture/Article	Covers percentage substance in the product up to 100 %.
Other given operational conditions affecting environmental exposure	Continuous exposure	
Technical conditions and measures at process level to prevent release Technical onsite conditions and measures to reduce or limit discharges, air emissions and	Application Area	Industrial use
	Water	Regular control of the pH value during introduction into open waters is required.,In general discharges should be carried out such that pH changes in receiving surface waters are minimised.,In general

releases to soil Organizational measures to prevent/limit release from the site		most aquatic organisms can tolerate pH values in the range of 6-9. This is also reflected in the description of standard OECD tests with aquatic organisms.,Risk management measures related to the environment aim to avoid discharging the substance into municipal wastewater or to surface water, in case such discharges are expected to cause significant pH changes.
Conditions and measures related to external treatment of waste for disposal	Disposal methods	Waste should be reused or discharged to the industrial wastewater and further neutralized if needed.

2.2 Contributing scenario controlling worker exposure for: PROC1, PROC2, PROC3, PROC4, PROC5, PROC7, PROC8a, PROC8b, PROC9, PROC10, PROC13, PROC14, PROC15, PROC19, PROC22, PROC23, PROC24

Activity	The process categories mentioned above are assumed to be the most important ones but other process categories could also be possible (PROC1 -27).	
Product characteristics	Concentration of the Substance in Mixture/Article	Covers percentage substance in the product up to 100 %.
	Concentration of the Substance in Mixture/Article	Concentration of substance in product: > 2%
	Physical Form (at time of use)	liquid
	Physical Form (at time of use)	Solid, low dustiness
Frequency and duration of use	Frequency of use	8 hours/day
	Frequency of use	200 days/year
Technical conditions and measures to control dispersion from source towards the worker	Application Area	Industrial use
	Use closed systems or covering of open containers (e.g. screens) Transport over pipes, technical barrel filling/emptying of barrel with automatic systems (suction pumps etc.) Use of pliers, grip arms with long handles with manual use to avoid direct contact and exposure by splashes (no working over one's head)	
Organisational measures to prevent /limit releases, dispersion and exposure	Application Area	Industrial use
	Replacing, where appropriated, manual processes by automated and/or closed processes. This would avoid irritating mists, sprayings and subsequent potential splashes. Workers in the risky process/areas identified should be trained a) to avoid to work without respiratory protection and b) to understand the corrosive properties and, especially, the respiratory inhalation effects and c) to follow the safety procedures instructed by the employer. The employer has also to ascertain that the required PPE is available	
Conditions and measures related to personal protection, hygiene and health evaluation	Application Area	Industrial use
	In case of dust or aerosol formation: use respiratory protection with approved filter (P2) Wear chemically resistant gloves. material: butyl-rubber, PVC, polychloroprene with natural latex liner, material thickness: 0.5 mm, breakthrough time: >480 min material: nitrile-rubber, fluorinated rubber, material thickness: 0.35-0.4 mm, breakthrough time: > 480 min If splashes are likely to occur: wear tightly fitting safety goggles, face–shield Wear suitable protective clothing, aprons, shield and suits Rubber or plastic boots	

3. Exposure estimation and reference to its source

Environment

The aquatic effect and risk assessment only deals with the effect on organisms/ecosystems due to possible pH changes related to OH- discharges, as the toxicity of the metal ion is expected to be insignificant compared to the (potential) pH effect. The high water solubility and very low vapour pressure indicates that the substance will be found predominantly in water. When the risk management measures related to the environment are implemented, there is no exposure to the activated sludge of a sewage treatment plant and there is no exposure to the receiving surface water. The sediment compartment is not considered, because it is not relevant for the substance. If emitted to the aquatic compartment, sorption to sediment particles will be negligible. Significant emissions to air are not expected due to the very low vapour pressure of the substance. If emitted to air as a water-based aerosol, the substance will be rapidly neutralised as a result of its reaction with CO2 (or acids). Significant emissions to the terrestrial environment are not expected. The sludge application route is not relevant for the emission to agricultural soil, as no sorption of the substance to particulate matter will occur in STPs/WWTPs. If emitted to soil, sorption to soil particles will be negligible. Depending on the buffer capacity of the soil, OH- will be neutralised in the soil pore water or the pH may increase. Bioaccumulation will not occur.

Workers

PROC1, PROC2, PROC3, PROC4, PROC5, PROC7, PROC8a, PROC8b, PROC9, PROC10, PROC13, PROC14, PROC15, PROC19, PROC23, PROC24: ECETOC TRA worker v3

Contributing Scenario	Specific conditions	Exposure routes	Level of Exposure	RCR
PROC1, PROC2, PROC3, PROC4, PROC5, PROC7, PROC8a, PROC8b, PROC9, PROC10, PROC13, PROC14, PROC15, PROC19, PROC23, PROC24	liquid, no LEV, no respiratory protection (RPE)	Worker - inhalative, short-term - local	0,17mg/m³	---
PROC1, PROC2	solid, no LEV, no respiratory protection (RPE)	Worker - inhalative, short-term - local	0,01mg/m³	---
PROC3, PROC15	solid, no LEV, no respiratory protection (RPE)	Worker - inhalative, short-term - local	0,1mg/m³	---
PROC4, PROC5, PROC14	solid, no respiratory protection (RPE), With Local Exhaust Ventilation	Worker - inhalative, short-term - local	0,2mg/m³	---
PROC8a, PROC8b, PROC9, PROC10, PROC13, PROC19	solid, no LEV, no respiratory protection (RPE)	Worker - inhalative, short-term - local	0,5mg/m³	---
PROC23	solid, with RPE (90%)	Worker - inhalative, short-term - local	0,4mg/m³	---
PROC24	solid, with RPE (90%)	Worker - inhalative, short-term - local	0,5mg/m³	---

This substance is corrosive. For the handling of corrosive substances and formulations, immediate dermal contacts occur only occasionally and it is assumed that repeated daily dermal exposure can be neglected. Dermal exposure

to the substance was not quantified. The substance is not expected to be systemically available in the body under normal handling and use conditions. Systemic effects of NaOH after dermal or inhalation exposure are not expected to occur. Based on workplace measurements and following the proposed risk management measures controlling worker and professional exposure, the inhalation exposure is below the DNEL.

4. Guidance to Downstream User to evaluate whether he works inside the boundaries set by the Exposure Scenario

The DU works inside the boundaries set by the ES if either the proposed risk management measures as described above are met or the downstream user can demonstrate on his own that his operational conditions and implemented risk management measures are adequate. This has to be done by showing that they limit the inhalation and dermal exposure to a level below the respective DNEL (given that the processes and activities in question are covered by the PROCs listed above) as given below
If measured data are not available, the DU may make use of an appropriate scaling tool such as ECETOC TRA.
Important note: By demonstrating a safe use when comparing exposure estimates with the long-term DNEL, the acute DNEL is therefore also covered (according to R.14 guidance, acute exposure levels can be derived by multiplying long-term exposure estimates by a factor of 2).

Additional good practice advice beyond the REACH Chemical Safety Assessment

Local exhaust ventilation is not required but good practice.
General ventilation is good practice unless local exhaust ventilation

1. Short title of Exposure Scenario 3: Professional use		
Main User Groups	SU 22: Professional uses: Public domain (administration, education, entertainment, services, craftsmen)	
Sectors of end-use	SU 10: Formulation [mixing] of preparations and/ or re-packaging (excluding alloys)	
Process categories	PROC1: Chemical production or refinery in closed process without likelihood of exposure or processes with equivalent containment conditions PROC2: Use in closed, continuous process with occasional controlled exposure PROC3: Manufacture or formulation in the chemical industry in closed batch processes with occasional controlled exposure or processes with equivalent containment condition PROC4: Use in batch and other process (synthesis) where opportunity for exposure arises PROC5: Mixing or blending in batch processes for formulation of preparations and articles (multistage and/ or significant contact) PROC8a: Transfer of substance or preparation (charging/ discharging) from/ to vessels/ large containers at non-dedicated facilities PROC8b: Transfer of substance or preparation (charging/ discharging) from/ to vessels/ large containers at dedicated facilities PROC9: Transfer of substance or preparation into small containers (dedicated filling line, including weighing) PROC10: Roller application or brushing PROC11: Non industrial spraying PROC13: Treatment of articles by dipping and pouring PROC15: Use as laboratory reagent PROC19: Hand-mixing with intimate contact and only PPE available PROC23: Open processing and transfer operations with minerals/ metals at elevated temperature PROC24: High (mechanical) energy work-up of substances bound in materials and/ or articles	
Environmental Release Categories	ERC8a: Wide dispersive indoor use of processing aids in open systems ERC8b: Wide dispersive indoor use of reactive substances in open systems ERC8d: Wide dispersive outdoor use of processing aids in open systems ERC9a: Wide dispersive indoor use of substances in closed systems	
2.1 Contributing scenario controlling environmental exposure for: ERC8a, ERC8b, ERC8d, ERC9a		
Activity	The environmental release categories mentioned above are assumed to be the most important ones but industrial environmental release categories could also be possible (ERC 1-12).	
Product characteristics	Concentration of the Substance in Mixture/Article	Covers percentage substance in the product up to 100 %.
Other given operational conditions affecting environmental exposure	Continuous exposure	
Technical conditions and measures at process level to prevent release Technical onsite conditions and measures to reduce or limit discharges, air emissions and releases to soil Organizational measures to prevent/limit release from the site	Application Area	Professional use
	Water	Regular control of the pH value during introduction into open waters is required.,In general discharges should be carried out such that pH changes in receiving surface waters are minimised.,In general most aquatic organisms can tolerate pH values in the range of 6-9. This is also reflected in the description of standard OECD tests with aquatic organisms.,Risk management measures related to the environment aim to avoid discharging the substance into municipal wastewater or to surface water, in case such discharges are expected to cause significant pH changes.

Conditions and measures related to external treatment of waste for disposal	Disposal methods	Waste should be reused or discharged to the industrial wastewater and further neutralized if needed.

2.2 Contributing scenario controlling worker exposure for: PROC1, PROC2, PROC3, PROC4, PROC5, PROC8a, PROC8b, PROC9, PROC10, PROC11, PROC13, PROC14, PROC15, PROC19, PROC22, PROC23, PROC24

Activity	The process categories mentioned above are assumed to be the most important ones but other process categories could also be possible (PROC1 -27).	
Product characteristics	Concentration of the Substance in Mixture/Article	Covers percentage substance in the product up to 100 %.
	Concentration of the Substance in Mixture/Article	Concentration of substance in product: > 2%
	Physical Form (at time of use)	liquid
	Physical Form (at time of use)	Solid, low dustiness
Frequency and duration of use	Frequency of use	8 hours/day
	Frequency of use	200 days/year
Technical conditions and measures to control dispersion from source towards the worker	Application Area	Professional use
	Use of pliers, grip arms with long handles with manual use to avoid direct contact and exposure by splashes (no working over one's head) Where possible use of specific dispensers and pumps specifically designed to prevent splashes/spills/exposure to occur.	
Organisational measures to prevent /limit releases, dispersion and exposure	Application Area	Professional use
	Replacing, where appropriated, manual processes by automated and/or closed processes. This would avoid irritating mists, sprayings and subsequent potential splashes. Workers in the risky process/areas identified should be trained a) to avoid to work without respiratory protection and b) to understand the corrosive properties and, especially, the respiratory inhalation effects and c) to follow the safety procedures instructed by the employer. The employer has also to ascertain that the required PPE is available	
Conditions and measures related to personal protection, hygiene and health evaluation	Application Area	Professional use
	In case of dust or aerosol formation: use respiratory protection with approved filter (P2) Wear chemically resistant gloves. material: butyl-rubber, PVC, polychloroprene with natural latex liner, material thickness: 0.5 mm, breakthrough time: >480 min material: nitrile-rubber, fluorinated rubber, material thickness: 0.35-0.4 mm, breakthrough time: > 480 min If splashes are likely to occur: wear tightly fitting safety goggles, face–shield Wear suitable protective clothing, aprons, shield and suits Rubber or plastic boots	

3. Exposure estimation and reference to its source

Environment

The aquatic effect and risk assessment only deals with the effect on organisms/ecosystems due to possible pH changes related to OH- discharges, as the toxicity of the metal ion is expected to be insignificant compared to the (potential) pH effect. The high water solubility and very low vapour pressure indicates that the substance will be found predominantly in water. When the risk management measures related to the environment are implemented, there is no exposure to the activated sludge of a sewage treatment plant and there is no exposure to the receiving

surface water. The sediment compartment is not considered, because it is not relevant for the substance. If emitted to the aquatic compartment, sorption to sediment particles will be negligible. Significant emissions to air are not expected due to the very low vapour pressure of the substance. If emitted to air as a water-based aerosol, the substance will be rapidly neutralised as a result of its reaction with CO2 (or acids). Significant emissions to the terrestrial environment are not expected. The sludge application route is not relevant for the emission to agricultural soil, as no sorption of the substance to particulate matter will occur in STPs/WWTPs. If emitted to soil, sorption to soil particles will be negligible. Depending on the buffer capacity of the soil, OH- will be neutralised in the soil pore water or the pH may increase. Bioaccumulation will not occur.

Workers

PROC1, PROC2, PROC3, PROC4, PROC5, PROC8a, PROC8b, PROC9, PROC10, PROC11, PROC13, PROC14, PROC15, PROC19, PROC23, PROC24: ECETOC TRA worker v3

Contributing Scenario	Specific conditions	Exposure routes	Level of Exposure	RCR
PROC1, PROC2, PROC3, PROC4, PROC5, PROC8a, PROC8b, PROC9, PROC10, PROC11, PROC13, PROC14, PROC15, PROC19, PROC23, PROC24	liquid, no LEV, no respiratory protection (RPE)	Worker - inhalative, short-term - local	0,17mg/m³	---
PROC1, PROC2	solid, no LEV, no respiratory protection (RPE)	Worker - inhalative, short-term - local	0,01mg/m³	---
PROC3, PROC15	solid, no LEV, no respiratory protection (RPE)	Worker - inhalative, short-term - local	0,1mg/m³	---
PROC4, PROC5, PROC11, PROC14	solid, no respiratory protection (RPE)	Worker - inhalative, short-term - local	0,2mg/m³	---
PROC8a, PROC8b, PROC9, PROC10, PROC13, PROC19	solid, no LEV, no respiratory protection (RPE)	Worker - inhalative, short-term - local	0,5mg/m³	---
PROC23	solid, with RPE (90%)	Worker - inhalative, short-term - local	0,4mg/m³	---
PROC24	solid, with RPE (90%)	Worker - inhalative, short-term - local	0,5mg/m³	---

This substance is corrosive. For the handling of corrosive substances and formulations, immediate dermal contacts occur only occasionally and it is assumed that repeated daily dermal exposure can be neglected. Dermal exposure to the substance was not quantified. The substance is not expected to be systemically available in the body under normal handling and use conditions. Systemic effects of NaOH after dermal or inhalation exposure are not expected to occur. Based on workplace measurements and following the proposed risk management measures controlling worker and professional exposure, the inhalation exposure is below the DNEL.

4. Guidance to Downstream User to evaluate whether he works inside the boundaries set by the Exposure Scenario

The DU works inside the boundaries set by the ES if either the proposed risk management measures as described above are met or the downstream user can demonstrate on his own that his operational conditions and implemented risk management measures are adequate. This has to be done by showing that they limit the inhalation and dermal exposure to a level below the respective DNEL (given that the processes and activities in question are covered by the PROCs listed above) as given below
If measured data are not available, the DU may make use of an appropriate scaling tool such as ECETOC TRA.
Important note: By demonstrating a safe use when comparing exposure estimates with the long-term DNEL, the acute DNEL is therefore also covered (according to R.14 guidance, acute exposure levels can be derived by multiplying long-term exposure estimates by a factor of 2).

Additional good practice advice beyond the REACH Chemical Safety Assessment

Local exhaust ventilation is not required but good practice.
General ventilation is good practice unless local exhaust ventilation

1. Short title of Exposure Scenario 4: Consumer use		
Main User Groups	SU 21: Consumer uses: Private households (= general public = consumers)	
Chemical product category	PC20: Products such as pH-regulators, flocculants, precipitants, neutralization agents PC35: Washing and cleaning products PC39: Cosmetics, personal care products	
Environmental Release Categories	ERC8a: Wide dispersive indoor use of processing aids in open systems ERC8b: Wide dispersive indoor use of reactive substances in open systems ERC8d: Wide dispersive outdoor use of processing aids in open systems ERC9a: Wide dispersive indoor use of substances in closed systems	
Activity	Note: this Exposure Scenario is only relevant for an appropriated use according to the quality grade of the substance delivered	
2.1 Contributing scenario controlling environmental exposure for: ERC8a, ERC8b, ERC8d, ERC9a		
NaOH is used by consumer at home for drain and pipe cleaning, wood treatment and it also used to make soap at home, NaOH is also used in batteries and oven-cleaner pads.		
Activity	The environmental release categories mentioned above are assumed to be the most important ones but other wide dispersive environmental release categories could also be possible (ERC8 - 11b).	
Product characteristics	Concentration of the Substance in Mixture/Article	Covers percentage substance in the product up to 100 %.
Technical conditions and measures at process level to prevent release Technical onsite conditions and measures to reduce or limit discharges, air emissions and releases to soil Organizational measures to prevent/limit release from the site	There are no specific risk management measures related to environment.	
Conditions and measures related to external treatment of waste for disposal	Disposal methods	This material and its container must be disposed of in a safe way (e.g. by returning to a public recycling facility)., If container is empty, trash as regular municipal waste., Batteries should be recycled as much as possible (e.g. by returning to a public recycling facility)., Recovery of the substance from alkaline batteries includes emptying the electrolyte, collection and neutralization.
2.2 Contributing scenario controlling consumer exposure for: PC20, PC35, PC39		
Activity	Sodium hydroxide can be used in many different chemical product categories(PC): PC20, 35, 39 (neutralization agents, cleaning products, cosmetics, personal care products)., NaOH can also be used in other PCs in low concentrations e.g. PC3 (up to 0.01%). PC8 (up to 0.1%).PC28 and PC31 (up to 0.002%) but it can be used also in the remaining product categories (PC 0-40)., The other PCs are not explicitly considered in this exposure scenario.	
Product characteristics	Concentration of the Substance in Mixture/Article	Covers percentage substance in the product up to 100 %.
	Physical Form (at time of use)	liquid
	Physical Form (at time of use)	Solid, low dustiness
Conditions and measures related		It is required to use resistant labelling-package to

to protection of consumer (e.g. behavioural advice, personal protection and hygiene)	Consumer Measures	avoid its auto-damage and loss of the label integrity, under normal use and storage of the product. The lack of quality of the package provokes the physical loss of information on hazards and use instructions. It is advisable to deliver only in very viscous preparations. It is advisable to delivery only in small amounts. For use in batteries, it is required to use completely sealed articles with a long service life maintenance. It is required that improved use instructions, and product information should always be provided to the consumers. This clearly can efficiently reduce the risk of misuse. For reducing the number of accidents in which (young) children or elderly people are involved, it should be advisable to use these products in the absence of children or other potential sensitive groups. Do not apply product into ventilator openings or slots. Keep out of the reach of children.
	Consumer Measures	In case of dust or aerosol formation: use respiratory protection with approved filter (P2) Wear impervious chemical resistant protective gloves. If splashes are likely to occur: wear tightly fitting safety goggles, face–shield

3. Exposure estimation and reference to its source

Environment

Consumer uses relate to already diluted products which will further be neutralized quickly in the sewer, well before reaching a WWTP or surface water.

Consumers

PC39, PC20, PC35: ConsExpo and SrayExpo

Contributing Scenario	Specific conditions	Exposure routes	Level of Exposure	RCR
PC20, PC35, PC39	Assessed only for the most critical use, (use of the substance in a spray oven cleaner)	consumer inhalation, acute - local	0,3 - 1,6mg/m³	< 1

The calculated short-term exposure is slightly higher than the long term DNEL for inhalation, but smaller than the short term occupational exposure limit. The substance will be rapidly neutralised as a result of its reaction with CO2 (or other acids). Consumer exposure to the substance in batteries is zero because batteries are sealed articles with a long service life maintenance.

4. Guidance to Downstream User to evaluate whether he works inside the boundaries set by the Exposure Scenario

The DU works inside the boundaries set by the ES if either the proposed risk management measures as described above are met or the downstream user can demonstrate on his own that his operational conditions and implemented risk management measures are adequate. This has to be done by showing that they limit the inhalation and dermal exposure to a level below the respective DNEL (given that the processes and activities in

question are covered by the PCs listed above) as given below
If measured data are not available, the DU may make use of an appropriate scaling tool such as ConsEXpo software.
Important note: By demonstrating a safe use when comparing exposure estimates with the long-term DNEL, the acute DNEL is therefore also covered (according to R.14 guidance, acute exposure levels can be derived by multiplying long-term exposure estimates by a factor of 2).

SECTION 8 - CONTROLS DOCUMENTATION

8.1 - PROCESS CONTROL NARRATIVE

I13

PROCESS AND CONTROL NARRATIVE

Meliadine STP Expansion

20C1131 I13 0001,01

Adam Moore
30/06/2020

TABLE OF CONTENTS

Table of Contents 1

Section 1 Document Introduction 4

1.1 Objectives of this Document 4

1.2 Reference Documents 4

1.2.1 Drawings 4

1.3 Abbreviations 5

Section 2 Process Description 7

2.1 Equalization (EQ) System 7

2.2 Fine Screen System 8

2.3 Aerobic Biological Treatment 8

2.4 Membrane Filtration 8

2.5 Membrane Cleaning 9

2.6 Treated Water System 9

2.7 Sludge Handling 9

2.8 Operational Flexibility 10

Section 3 Controls Philosophy 11

3.1 Introduction 11

3.1.1 Equipment Control – HOA Control 11

3.1.2 Train Operation 11

3.2 Modes of Operation 12

3.3 Operating Sequence Chart (OSC) 12

3.4 Control System and Communication 14

3.4.1 Programmable Logic Controller 14

3.4.2 Distributed I/O 14

3.4.3 Other Communications 14

Section 4 Control Narrative 15

4.1 Equalization (EQ) System 15

4.1.1 Equalization System Equipment 15

4.1.1.1 Equalization Pumps 16

4.1.1.2 Equalization Blower 17
4.1.2 Equalization System HMI Inputs 17
4.1.3 Equalization System Alarms 17
4.2 Fine Screen System 19
4.2.1 Fine Screen System Equipment 19
4.2.1.1 Fine Screens 20
4.2.1.2 Sump Pumps 21
4.2.2 Fine Screen System HMI Inputs 22
4.2.3 Fine Screen System Alarms 22
4.3 Aerobic Biological Treatment 24
4.3.1 Aerobic Biological System Equipment 24
4.3.1.1 Process Blowers 25
4.3.1.2 Alkalinity Dosing Pumps 25
4.3.2 Aerobic Biological System HMI Inputs 26
4.3.3 Aerobic Biological System Alarms 27
4.4 Membrane Filtration 30
4.4.1 Membrane Filtration System Equipment 30
4.4.1.1 Permeate Pumps 31
4.4.1.2 Return Activated Sludge (RAS) Pumps 33
4.4.1.3 Membrane Air Scour Blowers 33
4.4.1.4 Ultraviolet System 33
4.4.2 Membrane Filtration System HMI Inputs 33
4.4.3 Membrane Filtration System Alarms 34
4.5 Membrane Cleaning 38
4.5.1 Membrane Cleaning Equipment 38
4.5.1.1 Cleaning Chemical Dosing Pumps 38
4.5.2 Membrane Cleaning HMI Inputs 40
4.5.3 Membrane Cleaning Alarms 40
4.5.4 Chemical Addition Chart 40
4.6 Permeate Post Treatment 41
4.6.1 Permeate Post Treatment Equipment 41

4.6.1.1 Effluent Pumps 42
4.6.2 Permeate Post Treatment HMI Inputs 43
4.6.3 Permeate Post Treatment Alarms 44
4.7 Sludge Handling System 47
4.7.1 Sludge Handling System Equipment 48
4.7.1.1 Sludge Blower 48
4.7.2 Sludge Handling System HMI Inputs 48
4.7.3 Sludge handling System Alarms 49

SECTION 1 - DOCUMENT INTRODUCTION

1.1 - OBJECTIVES OF THIS DOCUMENT

This process control narrative document presents sewage treatment system functions. It describes the specific system requirements in terms of functionality and control. The information in this document is necessary for proper and efficient operation of the system. It explains how the system runs through the different operating modes. This document should be read in tandem with the process and instrumentation diagrams (P&IDs), process flow diagram (PFD), general arrangement (GA) drawing and HMI operator interface. It should be noted that only the scope of work of H2O Innovation is explained in this document. All documents relating to the existing plant are noted under the project code U65875 and the expansion is noted under the project code 20C1131.

1.2 - REFERENCE DOCUMENTS

1.2.1 - DRAWINGS

DRAWING NUMBER	DRAWING NAME	NUMBER OF PAGES
U65875-C01-0001	LEGEND	1
U65875-C01-0190	FEED WATER EQUALIZATION	1
U65875-C01-0110	RAW WATER SCREENING	1
U65875-C01-0720	AEROBIC TANK	1
U65875-C01-0740	MEMBRANE FILTRATION	1
U65875-C01-0750	BLOWERS FOR MBR SYSTEM	2
U65875-C01-0790	PERMEATE TANK	1
U65875-C01-0800	DOSING SKIDS – CLEANING CHEMICALS	1
U65875-C01-0800	DOSING SKIDS – ALKALINITY	1
U65875-C01-0960	SLUDGE HANDLING SYSTEM	1

DRAWING NUMBER	DRAWING NAME	NUMBER OF PAGES
20C1131-C01-0001	LEGEND	1
20C1131-C01-0110	SUMP BOOSTER PUMP	1
20C1131-C01-0720	AEROBIC TANK	1
20C1131-C01-0740	MEMBRANE FILTRATION	1
20C1131-C01-0750	BLOWERS FOR MBR SYSTEM	2
20C1131-C01-0790	PERMEATE TANK	1
U65875-C01-0800	DOSING SKIDS – ALKALINITY	1

1.3 - ABBREVIATIONS

ABBREVIATIONS	DEFINITION
AUTO	Automatic Operation
BOD	Biological Oxygen Demand
CEB	Chemically Enhanced Backwash
CIP	Clean in Place
EQ	Equalization
GA	General Arrangement Drawing
HMI	Human Machine Interface
MBR	Membrane Bioreactor
MLSS	Mixed Liquor Suspended Solids
NaOCl	Sodium Hypochlorite
NH3	Ammonia
PFD	Process Flow Diagram
P&ID	Process & Instrumentation Diagram
PLC	Programmable Logic Controller

RAS	Return Activated Sludge
STP	Sewage Treatment Plant
TMP	Trans Membrane Pressure
UV	Ultraviolet
VFD	Variable Frequency Drive
WAS	Waste Activated Sludge

SECTION 2 - PROCESS DESCRIPTION

The Sewage Treatment Plant (STP) is a membrane bioreactor (MBR) design and will treat domestic sewage from the Agnico Meliadine Lake Mine in Nunavut. It will include equalization, fine screening, biological reactors with membrane filtration, and a sludge handling system. A process schematic, shown in Figure 1 below, illustrates the process flow of this system.

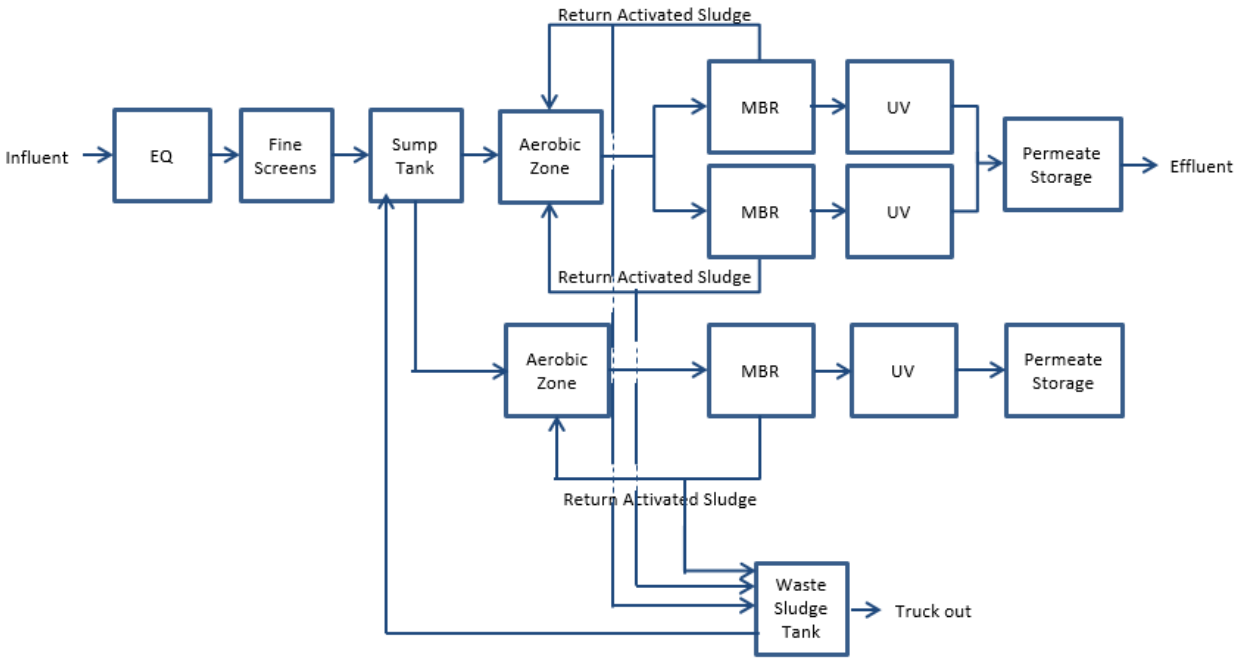

Figure 1 – Process Flow Schematic

The system is designed to handle a maximum day flow rate of 216 m3/d with an additional 83 m3/d for the expansion with the inclusion of the second bioreactor tank and third membrane train. The system is comprised of a common equalization system with screening and biological treatment followed by three trains of membrane filtration. Trains are numbered 1, 2 and 3. Waste sludge is sent to a single sludge holding tank before it is removed for disposal. The system is installed in above ground insulated tanks and ISO containers with associated mechanical and electrical equipment provided inside the containers.

2.1 - EQUALIZATION (EQ) SYSTEM

Feed is pumped (by others) to the equalization system, which is comprised of two aerated cylindrical tanks sized to handle the peak hour design volume of 106,200 L. The equalization tank provides a residence time sufficient to maintain steady flows to the biological treatment system during low and high flow periods. Equalized water is pumped via two equalization (EQ) pumps on variable frequency drives (VFDs) into a standpipe inside the second cylindrical tank and flows from that pipe by gravity to the fine screens inside Container 1.

2.2 - FINE SCREEN SYSTEM

Equalized wastewater flow to the fine screens by gravity. The fine screens are rotary drum screens with 2 mm perforated plate openings that automatically remove debris and trash. This protects the downstream processes and equipment. The fine screen operates continuously. Pressurized wash water is used intermittently to clean the screens and screenings. Screened raw water falls by gravity from the screens into a sump, where the screened water is collected and pumped to the aerobic tanks.

2.3 - AEROBIC BIOLOGICAL TREATMENT

The aerobic tanks are the two other cylindrical tanks located outdoors. Aerobic biological treatment is the work horse of any biological wastewater system. In this process, heterotrophic bacteria consume organic pollutants (BOD), oxygen and ammonia, and produce carbon dioxide, water and nitrate as well as reproducing to grow the bacteriological population. Fine bubble diffusers are installed in the bottom of the aerobic tank and process blowers continuously provide air to the diffusers. The air bubbling from the bottom of the tank imparts oxygen into the liquid phase to maintain a dissolved oxygen concentration of approximately 2 mg/L to satisfy the needs of the biomass. The bubbling is also used to keep the bacteria in suspension. The oxygenated mixed liquor suspended solids (MLSS) overflows into a standpipe inside the cylindrical tank and flows by gravity to the membrane filtration trains.

2.4 - MEMBRANE FILTRATION

The activated sludge is split between the two membrane tanks. Membrane filtration is used to separate the bacteria from the water to keep them in the process at the desired concentration. Activated sludge is returned at a constant flow rate to the Aerobic Tank to prevent a build up of sludge in the membrane tank. The Return Activated Sludge (RAS) is pumped by the RAS pumps at a flow rate 4 times greater than the design flow rate of the plant. In this manner the activated sludge is recirculated from the aerobic tank, to the membrane tank and back to the aerobic tank constantly at approximately 4 times the average feed flow rate.

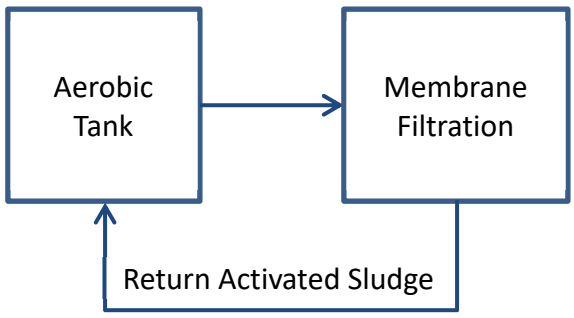

Figure 2 – Bioreactor Sludge Recirculation Set-up

The filtered liquid (called permeate) is pulled through the hollow fiber membrane filters by the permeate pumps at a flow rate that matches the feed flow rate entering the aerobic tank to maintain a constant liquid level in the membrane tanks. From the permeate pumps, each membrane bioreactor train sends permeate through an inline ultraviolet (UV) disinfection system. The UV system operates continuously to kill any residual organisms remaining before it is sent to a common permeate storage tank. The permeate tank acts as a reservoir for treated water that can be used for CEB and CIP processes.

2.5 - MEMBRANE CLEANING

To mitigate membrane fouling, several maintenance processes are performed:

1. Membrane Relax – membrane permeation is stopped for 1 minute after every 7 minutes of permeation.
2. Chemically Enhanced Backpulse (CEB) – membrane permeate flow is reversed to flow back into the membranes while cleaning chemical is added inline. This is done once per week.
3. Clean in Place (CIP) – a semi annual process where a high concentration of chemical is used to restore permeability to the membranes. This is a combination of a reverse flow with chemical and a soak period.

2.6 - TREATED WATER SYSTEM

Permeate is transferred into the permeate tanks, where it is then pumped by effluent pumps to a discharge location. One permeate tank is provided for membrane trains 1 and 2 while a second permeate tank is supplied for membrane train 3.

2.7 - SLUDGE HANDLING

Since bacteria within the STP continue to reproduce as they consume organics and nutrients, the concentration of biomass, measured as Mixed Liquor Suspended Solids (MLSS), increases with time. To maintain a steady MLSS in the bioreactors, some sludge must be removed (wasted) on a daily basis. Sludge is wasted by re directing the RAS flow to the sludge storage tank, referred to as waste activated sludge (WAS). The sludge storage tank is aerated to maintain an aerobic biomass. The aeration can be turned off for a period of time to allow sludge to settle within the sludge tank and thicken by gravity. The supernatant that is left in the upper portion of the tank can be removed by opening a valve from the sludge tank and allowing it to flow to the sump tank where it re enters the treatment process. This operation (called decanting) reduces the volume of sludge that needs to be handled and extends the period of time that the sludge tank can be used before thickened sludge must be disposed of.

2.8 - OPERATIONAL FLEXIBILITY

The membrane portion of the sewage treatment system operates as three (3) separate trains. Therefore, if maintenance is required for any piece of equipment in the membrane system, the plant will continue to operate one train treating the full flow for short durations.

In the event of very low sewage production periods, a train can be taken completely offline by draining and flushing the system and filling the membrane tank with permeate since the membranes must be kept wet once they are commissioned.

SECTION 3 - CONTROLS PHILOSOPHY

3.1 - INTRODUCTION

The controls for the Meliadine STP are automated by a programmable logic controller (PLC) that functions based on a series of operating “modes”. The PLC automatically moves the system between the different modes using triggers that are executed based on a variety of parameters such as tank level, pressure, dissolved oxygen and flow rate that are measured continuously by the instrumentation that is installed throughout the plant. Automated valves are actuated and equipment is turned on and off based on the modes and conditions at any given time.

3.1.1 - EQUIPMENT CONTROL – HOA CONTROL

All equipment can either be manually controlled or controlled by the PLC program. Each piece of equipment appears on the touch screen that acts as the Human Machine Interface (HMI). When the symbol for a piece of equipment such as a pump is touched, a pop up screen appears allowing the operator to choose to override the AUTO setting to ON or OFF. If it is set to ON, the equipment will RUN and start operating irrespective of plant conditions. If it is set to OFF, the equipment will STOP, regardless of the current status of the plant. If it is set to AUTO, it will automatically operate in RUN and STOP based on the mode and conditional programming that has been established and is described in detail within this document.

The HOA screen for equipment with variable speed, such as a pump with a VFD, allows the operator to input a specific speed (0 100%) at which the equipment will operate when it is manually turned ON.

3.1.2 - TRAIN OPERATION

The three (3) membrane trains operate independently depending on their status at a given time. Each train operates based on the tank levels, flow rates and pressures of the particular train. When one train encounters a situation where it needs to stop operation, such as a cleaning or alarms that require it to stop, the feed from the aerobic tank continues to flow into a pipe that hydraulically connects both membrane tanks. As a result, even if one membrane train stops, the hydraulic connection causes all of the feed to flow to the other train to balance the membrane tank levels.

3.2 - MODES OF OPERATION

The controls system operates based on a number of modes as shown below:

MODE	DESCRIPTION
OFF	All process equipment is OFF with the exception of blowers to ensure the system remains aerobic.
PRODUCTION	Production mode occurs during normal operation when sewage is being sent to the EQ tanks. All process equipment operates based on the automatic control logic to provide treatment of sewage, as described below.
STANDBY	Standby mode occurs when the amount sewage being sent to the system is less than the system capacity such that the system must "wait" for adequate feed to continue operation.
CEB	CEB or "Chemically Enhanced Backpulse" is a weekly membrane maintenance process that sends cleaning agents to the membranes to mitigate membrane fouling
CIP	CIP or "Clean in Place" is a process designed to return the membranes to a near clean state using a high chemical concentration and relatively long duration (4 hours). The process is conducted semi annually as required.

3.3 - OPERATING SEQUENCE CHART (OSC)

The OSC shown below provides an overview of the status of the major equipment and valve positions for different operating modes and steps within each mode. It indicates for each operating mode whether equipment is in STOP, as indicated by an "X" or RUN/AUTO, as indicated by an "O".

Where a piece of equipment is assigned an "X" for a particular mode, it indicates that this equipment will always be in STOP during the associated mode. Where a piece of equipment is assigned an "O" for a particular mode, it indicates that this equipment will operate either continuously or based on a set of conditions. Since some equipment operates conditionally based on triggers, the "O" status indicates that this equipment will be subject to its conditional programming. For example, the Fine Screen is indicated as "O" during "Production" mode; however, it is programmed to only operate when the Feed Flow Rate is >0. Therefore, even though the system is in "Production" mode, if the Feed Flow Rate is zero, the Fine Screen will stop operating until the Feed Flow Rate >0.

		Common Equipment										Train Equipment				Valves									
	X STOP O AUTO (RUN/STOP)	EQ Pumps[1]	EQ Blower	Fine Screens[2]	Sump Pumps	Process Blowers	Alkalinity Dosing Pumps[3]	Hypochlorite Dosing Pump[4]	Citric Acid Dosing Pump[4]	Effluent Pumps	Sludge Blower	Permeate Pumps	RAS Pumps	Membrane Blowers	UV System	Wash Water Solenoid Valve (FV-11221)	TMP Control Valve (FV-31026)	Hypochlorite Dosing Valve[4] (FV-83798)	Citric Acid Dosing Valve[4] (FV-83598)	Permeate Inlet Valve (FV-79001)	CIP Inlet Valve (FV-79002)	Permeate Outlet Valve (FV-79098)	CIP Outlet Valve (FV-79099)	Membrane Tank Feed Valve (FV-74050)	Wasting Valve (FV-96001)
SYSTEM MODE	**OFF**	X	O	X	X	O	X	X	X	X	O	X	X	O	X	X	X	X	X	X	X	X	X	X	X
	Standby	O	O	O	O	O	O	X	X	X	O	X	O	O	X	O	X	X	X	O	X	X	X	O	X
	Production - Permeation	O	O	O	O	O	O	X	X	O	O	O	O	O	O	O	X	X	X	O	X	O	X	O	O
	Production - Relax	O	O	O	O	O	O	X	X	O	O	X	O	O	O	O	X	X	X	O	X	X	X	O	O
TRAIN MODE	**CEB - Initiate**	O	O	O	O	O	O	X	X	O	O	X	O	X	X	O	X	X	X	X	X	X	X	X	X
	CEB - Injection	O	O	O	O	O	O	O	O	O	O	O	X	X	X	O	O	O	O	X	O	X	O	X	X
	CEB - Soak	O	O	O	O	O	O	X	X	O	O	X	X	X	X	O	X	X	X	X	O	X	X	X	X
	CEB - Flush	O	O	O	O	O	O	X	X	O	O	O	O	O	X	O	O	X	X	X	O	X	O	X	X
	CEB - Finish	O	O	O	O	O	O	X	X	O	O	X	O	O	X	O	X	X	X	O	X	O	X	O	X
	CIP - Initiate	O	O	O	O	O	O	X	X	O	O	X	O	X	X	O	X	X	X	X	X	X	X	X	X
	CIP - Injection	O	O	O	O	O	O	O	O	O	O	O	X	X	X	O	O	O	O	X	O	X	O	X	X
	CIP - Soak	O	O	O	O	O	O	X	X	O	O	X	X	X	X	O	X	X	X	X	O	X	X	X	X
	CIP - Flush	O	O	O	O	O	O	X	X	O	O	O	O	O	X	O	O	X	X	X	O	X	O	X	X
	CIP - Finish	O	O	O	O	O	O	X	X	O	O	X	O	O	X	O	X	X	X	O	X	O	X	O	X

[1] EQ Pumps operate based on EQ Tank Level

[2] Fine Screens operate only when the EQ Pump Feed Flow Rate is >0

[3] Alkalinity Pumps operate based on a feedback loop from the pH Probe on the Aerobic Tank effluent

[4] During a CEB or CIP, *EITHER* the hypochlorite *OR* the citric acid will be initiated, depending on the type of clean selected. The two chemicals must never be mixed together to avoid the formation of poison gas.

3.4 - CONTROL SYSTEM AND COMMUNICATION

3.4.1 - PROGRAMMABLE LOGIC CONTROLLER

The system will be controlled by a Schneider Electric Modicon m340 or m580 Processor, and the HMI will operate on a Wonderware interface.

3.4.2 - DISTRIBUTED I/O

Schneider IO will be used for the I/O in each container. The local instruments and valves will be wired to the corresponding local I/O junction box.

3.4.3 - OTHER COMMUNICATIONS

Ethernet/IP will be used for the communication between the PLC and the local IO blocks. Ethernet/IP will also be used for the communication between the PLC and the local HMI screen and also the VFDs.

SECTION 4 - CONTROL NARRATIVE

4.1 - EQUALIZATION (EQ) SYSTEM

Domestic sewage is sent by lift pumps through a Raw Feed Flowmeter (FIT 11274) to the STP. The equalization system suppresses variability in feed flow to the treatment plant. The two (2) EQ Tanks (T 19000A/B) are hydraulically connected in series and combined have sufficient volume to handle the expected variability in feed flow. The equalization tanks fill and empty as sewage production varies but send a relatively consistent flow forward to the downstream processes.

An Equalization Blower (B 75000) provides air to both EQ Tanks to maintain an aerobic environment and provide mixing. Air is distributed through Coarse Bubble Diffusers (CBD 19086) installed in the EQ Tanks.

The EQ Pumps (P 19200A/B) are end suction pumps (Not by H2O Innovation) that are used to transport equalized sewage from the EQ Tank, through the equalized feed flowmeter (FIT 19274) and into the Fine Screens (SCR 11200A/B). Each EQ pump can handle the full flow to the plant so that when one EQ pump is offline the other can continue to supply the STP with equalized flow.

4.1.1 - EQUALIZATION SYSTEM EQUIPMENT

EQUIPMENT	TAGS	QTY	DESIGN VALUE	NOTES
Raw Feed Flowmeter	FIT 11274	1	0 110 m3/hr	Loose shipped, measures the instantaneous flow to the plant and totalizes the daily flow [1]
EQ Tanks	T 19000A/B	2	Volume = 63 m3 each	Cylindrical tank
Equalization Blower	B 75000	1	220 m^3/h @ 6.5 m H_2O	One for both tanks
Coarse Bubble Diffusers	CBD 19086A1/A4 CBD 19086B1/B4	8	n/a	
EQ Level Sensors	LT 19060A/B	2	0 7 m H_2O	One per tank
EQ Pumps	P 19200A/B	2	9 m^3/hr each	VFD controlled Pumps not by H2O Innovation

Equalized Feed Flowmeter	FIT 19274	1	0 25 m3/hr	Measures the equalized flow to the plant

[1]HMI should display the previous day's total flow as measured through the raw feed flowmeter as well as the cumulative flow from the current day (since midnight).

4.1.1.1 EQUALIZATION PUMPS

When the STP system is in PRODUCTION mode or STANDBY mode, the EQ Pumps will operate based on the commands given from the PLC. The EQ Pumps operate on VFDs to allow their speeds to be adjusted to meet different Flow Rate Set Points. These Flow Rate Set Points are met using a PID loop to adjust the pump speed based on the measured flow of the Equalized Feed Flow Meter (FIT 19274). The EQ Pump status and Flow Rate Set Points are determined in response to the EQ Level Sensors (LT 19060A/B) as follows:

EQ TANK LEVEL	DESCRIPTION	NOTES
Below LoLo Level Set-Point in Tank 2	STOP EQ Pumps	This protects the EQ Pumps from running dry. LoLo Alert is shown on PLC.
Between Lo Level and Hi Level Set-Points in Tank 2	RUN EQ Pump; system enters PRODUCTION mode. Equalized Feed Flowrate = "Flow Set Point"	The "Flow Set Point" is 9 m3/hr; however, the operator can change this value to prevent intermittent operation during times with low sewage production
Between Hi Level and HiHi Level Set-Points in Tank 2	RUN EQ Pump; Equalized Feed Flowrate = "Max Feed Flow Set Point"	The "Max Feed Flow Set Point" is 9 m3/hr
Above HiHi Level Set-Point in Tank 2	RUN EQ Pump. Equalized Feed Flowrate = "Max Feed Flow Set Point"	When the EQ Tank level increases to the HiHi Level Set Point, a critical alarm occurs, but the pump continues to RUN at the same set point.

Note: EQ Pump operation should alternate between EQ Pump A and EQ Pump B every 24 hours unless a Pump Fault indicates otherwise.

In the event of a level transmitter failure in EQ Tank 2, the level transmitter in EQ Tank 1 will be used. This mode is for emergency purposes only; it is imperative that the EQ Tank 2 level transmitter be repaired as soon as possible to resume normal plant control and operation. This is important because in the event of a line freeze or blockage between EQ Tank 1 and 2, both

transmitters need to be functioning in order to identify the differing tank levels and correct the problem quickly.

4.1.1.2 EQUALIZATION BLOWER

The Equalization Blower is used to supply oxygen to both Equalization Tanks to maintain an aerobic environment and provide mixing. One blower is supplied for both tanks. Under normal conditions, the blower will always be in RUN.

4.1.2 - EQUALIZATION SYSTEM HMI INPUTS

The following values are input on the HMI and can be adjusted to optimize system operation.

HMI INPUT	INITIAL VALUE
Raw Feed Flow Rate - Lo Set-Point	1 m3/hr
Raw Feed Flow Rate - Hi Set-Point	106 m3/hr
EQ Tank 1/2 Level – LoLo Set-Point	0.8 m
EQ Tank 1/2 Level - Lo Set-Point	1.0 m
EQ Tank 1/2 Level - Hi Set-Point	4.0 m
EQ Tank 1/2 Level - HiHi Set-Point	6.0 m
Equalized Feed Flow Set-Point	9 m3/hr
Equalized Max Feed Flow Set-Point	9 m3/hr
Equalized Feed Flow Rate - LoLo Set-Point	1 m3/hr

4.1.3 - EQUALIZATION SYSTEM ALARMS

ALARM OR ALERT	DESCRIPTION	ACTION
Raw Feed Flow Rate - Lo	Occurs if the raw feed flow rate is lower than the Lo setpoint	No Action
Raw Feed Flow Rate - Hi	Occurs if the raw feed flow rate is higher than the Hi setpoint	Alert: “Raw Feed Flow Rate – Hi”
Raw Feed Flowmeter Fault	Occurs if the raw feed flowmeter returns non 4 20 mA signal	Alert: “Raw Feed Flowmeter Fault”
EQ Blower Fault	Occurs if EQ blower returns a non 4 20 mA signal	Alert: “EQ Blower Fault” Alert operator to repair or replace blower as soon as possible

EQ Tank 1 Level – LoLo	Occurs when EQ Tank 1 level drops below the LoLo Level Set Point	Alert: "EQ Tank 1 Level LoLo"
EQ Tank 1 Level – Lo	Occurs when EQ Tank 1 level drops below the Lo Level Set Point	No Action
EQ Tank 1 Level - Hi	Occurs when EQ Tank 1 level rises above Hi Level Set Point	Alert: "EQ Tank 1 Level Hi" (No Action)
EQ Tank 1 Level - HiHi	Occurs when EQ Tank 1 level rises above HiHi Level Set Point	Critical Alarm: "EQ Tank 1 – Level HiHi" (No Action) Note that an emergency overflow is installed on both EQ tanks that will allow a controlled overflow in case of emergencies.
EQ Tank 1 Level Sensor Fault	Occurs if the transmitter returns non 4 20 mA signal	Critical Alarm: "EQ Tank 1 – Level Sensor Fault" Use levels from EQ Tank 2 Level Sensor until EQ Tank 1 Level Sensor Fault cleared
EQ Tank 2 Level – LoLo	Occurs when EQ Tank 2 level drops below the LoLo Level Set Point	Alert: "EQ Tank 2 Level LoLo" STOP EQ pumps
EQ Tank 2 Level – Lo	Occurs when EQ Tank 2 level reaches the Lo Level Set Point	No Alert/Alarm Put EQ Pumps in RUN if they are in STOP; system enters PRODUCTION mode
EQ Tank 2 Level - Hi	Occurs when EQ Tank 2 level rises above Hi Level Set Point	Alert: "EQ Tank 2 Level Hi" (No Action)
EQ Tank 2 Level - HiHi	Occurs when EQ Tank 2 level rises above HiHi Level Set Point	Critical Alarm: "EQ Tank 2 – Level HiHi" (No Action) Note that an emergency overflow is installed on both EQ tanks that will allow a controlled overflow in case of emergencies.
EQ Tank 2 Level Sensor Fault	Occurs if the transmitter returns non 4 20 mA signal	Critical Alarm: "EQ Tank 2 – Level Sensor Fault" Use levels from EQ Tank 1 Level Sensor until EQ Tank2 Level Sensor Fault cleared

EQ Pump A Fault	Indicates mechanical failure of EQ Pump A	Alert: "EQ Pump A Fault" Turn EQ Pump A to OFF and switch operation to EQ Pump B
EQ Pump B Fault	Indicates mechanical failure of EQ Pump B	Alert: "EQ Pump B Fault" Turn EQ Pump B to OFF and switch operation to EQ Pump A
Equalized Feed Flow Rate - LoLo	Occurs when EQ Pump is ON and FIT 19274 reads less than the Equalized Feed LoLo Set Point	Alarm: "Equalized Feed Flow Rate LoLo" Turn OFF EQ Pumps – this indicates a possible broken pipe or clogged pipe/pump. Operator must repair immediately.
Equalized Feed Flowmeter Fault	Occurs if the flowmeter returns non 4 20 mA signal	Alarm: "Equalized Feed Flowmeter Fault" Continue EQ Pump operation at last setpoint for VFD and continue Fine Screen operation until Fault is cleared

4.2 - FINE SCREEN SYSTEM

The equalized sewage flows through the Fine Screens (SCR 11200A/B) to remove hair, trash and debris that can have a detrimental effect on downstream processes. The fine screens are automatic and flushing water is intermittently used to clean the screens to prevent excessive accumulation of debris on the screen holes. The frequency and duration of cleans are controlled by timers on solenoid valves that send wash water to the screens and can be adjusted by the operator at the HMI. Once the sewage passes through the screen it falls into the Sump Tank for Screened Water (T 12000) by gravity. Screenings that are removed by the screen are washed, compacted and automatically sent to a trash receptacle (T 11800), which must be emptied, and the trash disposed of on a daily basis. Screened water is pumped by the Sump Pumps (P 12200A/B) to the Aerobic Tank.

4.2.1 - FINE SCREEN SYSTEM EQUIPMENT

EQUIPMENT	TAGS	QTY	DESIGN VALUE	NOTES
Fine Screens	SCR 11200A/B	2	N/A	Duty/standby configuration, both operate when the Feed Flow to the Screens > 0, and continue to operate

				for a set time after the signal ends
Fine Screen Wash Water Solenoid Valve	FV 11221	1	N/A	Only operates on cycle when the Fine Screens are running
Fine Screen Trash Basket	T 11800	1	N/A	Must be emptied daily by the operator
Sump for Screened Water	T 12000	1	4 m3	
Sump Pumps for Train 1 and 2	P 12200A/B	2	9 m3/hr each	Duty/standby configuration
Sump Pump for Train 3	P 12300	1	4.5 m3/hr each	Dedicated pump for MBR train 3
Sump Level Sensor	LT 12060	1	0 – 20 kPa (0 – 1.2 m)	
Screened Water pH Sensor	AIT 11094	1	pH: 0 14	
Screened Water Flowmeter	FIT 12274	1	0 25 m3/hr	Measures the screened flow to the plant

4.2.1.1 FINE SCREENS

When the system is in PRODUCTION or STANDBY mode, the screens will be in AUTO. The screens only RUN when there is feed to them as measured by the equalized feed flow meter (FIT 19274). The screen auger will continue to RUN for the set time (T1) after the signal ends.

The screen/press shower will RUN on cycle whenever the auger is operating. The wash water shower will cycle on and off and can be adjusted by timer for cycle length and duration of shower. The shower will operate a minimum of once per day to keep the plug moist. A typical cycle is on for 5 20 seconds and then off for 30 200 seconds (i.e., cycle length of 35 220 seconds, and duration of wash for 5 20 seconds).

4.2.1.2 SUMP PUMPS

When the STP system is in PRODUCTION or STANDBY mode, the Sump Pumps will operate based on the level in the Sump Tank. The Sump Pumps (P 12200A/B and P 12300) are each set up to operate at the design flow rate of the plant. This flow can be monitored using the screened water flowmeter (FIT 12274). A dedicated sump pump for MBR train 3 (P 12300) will pull screened water off the discharge pipe of the main sump pump line and send it to the Aerobic Tank (T 72100). When either sump pumps P 12200A/B are running, sump pump P 12300 will also RUN. The flow to train 3 can be monitored using the flowmeter (FIT 12374). Sump pump P 12300 will be controlled by a VFD and will be controlled based on a flowrate setpoint.

Under normal operation, one pump will operate. In the event of an upset where the Sump Tank level increases, an emergency backup is available to prevent overflowing inside the container. If the Sump Tank level reaches the "HiHi" level, the second Sump Pump will RUN to increase the flow through the system. Once the Sump Tank level falls below the "LoLo" level, both Sump Pumps will turn OFF. When the level increases again the system will return to operation as normal with one pump running.

The Sump Pump status and Flow Rates are determined in response to the Sump Tank Level Sensor (LT 12060) as follows:

SUMP LEVEL	DESCRIPTION	NOTES
Below LoLo Level Set-Point	STOP Sump Pumps	This protects the Sump Pumps from running dry.
Between LoLo Level and HiHi Level Set-Points	RUN Sump Pump.	During normal operation a single Sump Pump is in RUN and the flow rate should be adjusted to 9 m3/hr to match the Equalized Feed Flow Set Point. The operator can manually adjust the flow if desired to meet specific plant needs.
Above HiHi Level Set-Point	RUN both Sump Pumps P 12200A/B.	When the Sump Tank level increases to the HiHi Level Set Point, a critical alarm occurs, and the second Sump Pump will RUN. The EQ pumps will also be turned to STOP to prevent additional water from entering the Sump Tank. Both pumps will continue to RUN until the Sump Tank level drops to the LoLo Level Set Point. With both pumps running, the total flow rate will be approximately 18 m3/hr. Note that an emergency overflow is

		installed on the Sump tank that will allow a controlled overflow out of the container in case of emergencies.

Note: Sump Pump operation should alternate between Sump Pump A and Sump Pump B every 24 hours unless a Pump Fault indicates otherwise.

4.2.2 - FINE SCREEN SYSTEM HMI INPUTS

The following values are input on the HMI and can be adjusted to optimize system operation.

HMI INPUT	INITIAL VALUE
Fine Screen Auger Timer (T1)	2 minutes
Fine Screen Washwater Timer	200 seconds
Fine Screen Washwater Duration	10 seconds
Sump Tank Level – LoLo Set-Point	0.3 m
Sump Tank Level – HiHi Set-Point	1.0 m
Screened Water pH - Lo Set-Point	6.0
Screened Water pH - Hi Set-Point	8.0
Screened Water Flow Rate - LoLo Set-Point	1 m3/hr
Sump Pump (P-12300) Flowrate Setpoint	4.54 m3/hr

4.2.3 - FINE SCREEN SYSTEM ALARMS

ALARM OR ALERT	DESCRIPTION	ACTION
Fine Screen A Fault	Indicates that fine screen may not be operating properly	Alert: “Fine Screen A Fault – divert flow to Fine Screen B”
Fine Screen B Fault	Indicates that fine screen may not be operating properly	Alert: “Fine Screen B Fault – divert flow to Fine Screen A”
Sump Pump P-12200A Fault	Indicates mechanical failure of Sump Pump P 12200A	Alert: “Sump Pump A Fault” Turn Sump Pump A to OFF and switch operation to Sump Pump P 12200B
Sump Pump P-12200B Fault	Indicates mechanical failure of Sump Pump P 12200B	Alert: “Sump Pump B Fault”

		Turn Sump Pump B to OFF and switch operation to Sump Pump P 12200A
Sump Pump P-12300 Fault	Indicates mechanical failure of Sump Pump P 12300	Alert: "Sump Pump P 12300 Fault" Train 3 will go into STANDBY until sump pump P 12300 fault is cleared.
Screened Water Flow Rate - LoLo	Occurs when Sump Pumps are ON and FIT 12274 reads less than the Screened Water Flow Rate LoLo Set Point	Alarm: "Screened Water Flow Rate LoLo" STOP Sump Pumps – this indicates a possible broken pipe or clogged pipe/pump. Also STOP EQ Pumps to prevent overflow in the container.
Sump Tank Level – LoLo	Occurs when Sump Tank level drops below the LoLo Level Set Point	Alert: "Sump Tank Level LoLo" STOP Sump Pumps
Sump Tank Level - HiHi	Occurs when Sump Tank level rises above HiHi Level Set Point	Critical Alarm: "Sump Tank – Level HiHi" RUN both Sump Pumps in tandem and STOP EQ Pumps until Tank Level drops below the Hi Level Set Point Note that an emergency overflow is installed on the Sump Tank that will allow a controlled overflow out of the container in case of emergencies.
Sump Tank Level Sensor Fault	Occurs if the transmitter LT 12060 returns non 4 20 mA signal	Critical Alarm: "Sump Pump – Level Sensor Fault" Continue Sump Pump in RUN until Level Sensor Fault cleared
Screened Water pH - Lo	Indicates pH is below the pH Lo Set Point	Alert: "Screened Water pH Lo"
Screened Water pH - Hi	Indicates pH is above the pH Hi Set Point	Alert: "Screened Water pH Hi"
Screened Water pH Sensor Fault	Occurs when sensor returns non 4 20 mA signal	Alert: "Screened Water pH Sensor Fault"
Screened Water Flowmeter FIT-12274 Fault	Occurs if the flowmeter returns non 4 20 mA signal	Alarm: "Screened Water Flowmeter Fault" Continue to RUN Sump Pumps P 12200A/B

Screened Water Flowmeter FIT-12374 Fault	Occurs if the flowmeter returns non 4 20 mA signal	Alarm: "Screened Water Flowmeter Fault" Continue to RUN Sump Pump P 12300

* If a "Fine Screen Fault" occurs and the screen stops operating properly, the Fine Screen will eventually blind with debris and the portion of feed flow entering that screen will overflow and bypass that screen. The operator must manually isolate the faulted screen to repair/replace it, while the remaining screen continues to operate. Each fine screen is sized to handle the full plant flow; however, a faulted screen must be repaired as soon as possible in order to ensure that downstream equipment is not affected.

4.3 - AEROBIC BIOLOGICAL TREATMENT

Screened sewage enters both Aerobic Tank 1 (T 73000) and Aerobic Tank 2 (T 73100) where it is mixed with Return Activated Sludge (RAS). RAS is pumped from the Membrane Tanks 1 and 2 (T 74000 1/2) back to Aerobic Tank 1 and 2 and from Membrane Tank 3 back to Aerobic Tank 2. The combined mixture called "Mixed Liquor" or "Activated Sludge" travels through the Aerobic Tanks and overflows into a standpipe, where it falls by gravity into a downcomer pipe. The overflow from Aerobic Tank (T 72000) splits into 2 lines that enters into Membrane Tanks (T 74000 1/2) while the overflow from Aerobic Tank (T 72100) goes to Membrane Tank (T 74000 3).

The purpose of the aerobic biological treatment is to provide a residence time within which the mixed liquor encounters a dissolved oxygen concentration above 1 mg/L. This allows heterotrophic bacteria to consume organics and ammonia and convert them to carbon dioxide and nitrate. During this biological process the bacteria also consume oxygen and produce more bacteria. Oxygen supply is provided by pumping air from the Process Blowers (B 75240A/B) through the Fine Bubble Diffusers (FBD 73086) and into the mixed liquor in the Aerobic Tank. The Dissolved Oxygen (DO) concentration is continuously measured by the DO sensor (AE 73094), and the pH and temperature are continuously monitored by the pH/Temperature Sensor (AIT 72093).

4.3.1 - AEROBIC BIOLOGICAL SYSTEM EQUIPMENT

EQUIPMENT	TAGS	QTY	DESIGN VALUE	NOTES
Aerobic Tanks	T 73000 T 72100	2	Volume = 63 m3	Cylindrical Tank
Process Blowers	B 75240A/B B 75340A/B	4	153 m3/hr at 6.5 m H_2O	Duty/standby configuration
Blower Air Mass Flowmeter	FIT 75274 FIT 75274	2	0 200 m^3/hr	

Fine Bubble Diffusers	FBD 73086 FBD 72186	2	N/A	
Aerobic Tank Level Sensor	LT 72060 LT 72160	2	0 – 25 m	
Alkalinity Dosing Pumps	P 80500A/B P 80600A/B	4	0.18 m3/d each	Dosing will automatically be adjusted by the PLC to ensure adequate buffering is available in the water to achieve the target pH range
pH/Temp Sensor	AIT 72093 AIT 72194	2	pH: 0 14 Temp: 0 50°C	Design value is pH 6 8
DO Sensor	AIT 72094 AIT 72193	2	O2: 0 10 mg/L	Design value is 2 mg/L

4.3.1.1 PROCESS BLOWERS

The Process Blowers are used to supply oxygen to the biomass in the Aerobic Tanks. Two Process Blowers are supplied for each aerobic tank in a duty/standby configuration, so that if one blower goes offline the other one will automatically switch to RUN. This redundancy is included because the aerobic treatment process is a critical operation and the blowers must satisfy the oxygen requirement for a given BOD and NH3 loading rate. Under normal conditions, the air supply to a train will always RUN in order to provide oxygen to the bacterial population. If the DO concentration drops below 1 mg/L the second blower will come on to supplement the air supply. The process blowers (B 75240A/B) will control the DO for Aerobic Tank (T 72000) and process blowers (B 75340A/B) will control the DO for Aerobic Tank (T 72100).

4.3.1.2 ALKALINITY DOSING PUMPS

The dosing of sodium hydroxide is used to add alkalinity to the wastewater treatment system to satisfy the alkalinity requirements of the nitrification process where ammonia (NH_3) is converted to nitrate (NO_3). Alkalinity also serves to buffer the wastewater and prevent pH swings.

The Alkalinity Dosing Pumps (P 80100) transport sodium hydroxide into the RAS lines where it is mixed and sent to the Aerobic Tanks. The dosing pumps will RUN when the pH, in the Aerobic tank the dosing skid is associated with, drops below the Lo pH Set Point until the pH increases to the Hi pH Set Point. The dosing rate will be constant and can be adjusted by the operator manually.

When the system is in Production mode, the Alkalinity Dosing Pump will be in RUN. The actual stroke length of the Alkalinity Dosing Pumps remains constant (set up during commissioning).

4.3.2 - AEROBIC BIOLOGICAL SYSTEM HMI INPUTS

The following values are input on the HMI and can be adjusted to optimize system operation.

HMI INPUT	INITIAL VALUE
pH AE-72094 LoLo – Set-Point	5.8
pH AE-72094 Lo – Set-Point	6.4
pH AE-72094 Hi – Set-Point	7.0
pH AE-72094 HiHi – Set-Point	8.0
DO AE-72093 LoLo – Set-Point	1.0
Aerobic Tank T-72000 Level – LoLo Set-Point	5.4 m
Aerobic Tank T-72000 Level - Lo Set-Point	5.6 m
Aerobic Tank T-72000 Level - Hi Set-Point	5.9 m
Aerobic Tank T-72000 Level - HiHi Set-Point	6.0 m
Process Blower B-75400A/B Flow Rate Lo Set-Point	50 m^3/h
Alkalinity Pump P-80500A/B Dosing Rate – Set-Point	100% stroke length
Alkalinity Tank T-80500 Level – Lo Set-Point	Set in field
pH AE-72194 LoLo – Set-Point [2]	5.8
pH AE-72194 Lo – Set-Point [2]	6.4
pH AE-72194 Hi – Set-Point	7.0
pH AE-72194 HiHi – Set-Point	8.0
DO AE-72193 LoLo – Set-Point	1.0
Aerobic Tank T-72100 Level – LoLo Set-Point	4.8 m [1]
Aerobic Tank T-72100 Level - Lo Set-Point	5.0 m [1]
Aerobic Tank T-72100 Level - Hi Set-Point	5.3 m [1]
Aerobic Tank T-72100 Level - HiHi Set-Point	5.4 m [1]
Process Blower B-75400A/B Flow Rate Lo Set-Point	50 m^3/h
Alkalinity Pump P-80600A/B Dosing Rate – Set-Point	100% stroke length

Alkalinity Tank T-80600 Level – Lo Set-Point	Set in field

Note: [1] Alarm setpoints for aerobic tank T 72100 LT are lower as the overflow point is approximately 0.6m lower than T 72000.

4.3.3 - AEROBIC BIOLOGICAL SYSTEM ALARMS

ALARM OR ALERT	DESCRIPTION	ACTION
Aerobic Tank T-72000 Level Sensor Fault	Occurs when level sensor LT 72060 returns non 4 20 mA signal	Alert: "Aerobic Tank 1 Level Sensor Fault"
Aerobic Tank T-72100 Level Sensor Fault	Occurs when level sensor LT 72160 returns non 4 20 mA signal	Alert: "Aerobic Tank 2 Level Sensor Fault"
Aerobic Tank T-72000 Level - Hi	Occurs when aerobic tank level rises above Hi Level Set Point	Alert: "Aerobic Tank Level Hi"
Aerobic Tank T-72000 Level - HiHi	Occurs when aerobic tank level rises above HiHi Level Set Point	Alarm: "Aerobic Tank Level HiHi" Pipe to Membrane Tanks may be clogged or frozen. STOP EQ Pumps. Note that an emergency overflow is installed on the Aerobic Tank that will allow a controlled overflow in case of emergencies.
Aerobic Tank T-72000 Level - Lo	Occurs when aerobic tank level drops below the Lo Level Set Point	Alert: "Aerobic Tank Level Lo"
Aerobic Tank T-72000 Level – LoLo	Occurs when aerobic tank level drops below the LoLo Level Set Point	Alarm: "Aerobic Tank Level LoLo" Tank may be leaking; Alert operator to investigate immediately. STOP EQ Pumps.
Aerobic Tank T-72100 Level - Hi	Occurs when aerobic tank level rises above Hi Level Set Point	Alert: "Aerobic Tank Level Hi"
Aerobic Tank T-72100 Level - HiHi	Occurs when aerobic tank level rises above HiHi Level Set Point	Alarm: "Aerobic Tank Level HiHi" Pipe to Membrane Tanks may be clogged or frozen. STOP Sump Pump P 12300. Note that an emergency overflow is installed on the Aerobic Tank that will allow a controlled overflow in case of emergencies.

Aerobic Tank T-72100 Level - Lo	Occurs when aerobic tank level drops below the Lo Level Set Point	Alert: “Aerobic Tank Level Lo”
Aerobic Tank T-72100 Level – LoLo	Occurs when aerobic tank level drops below the LoLo Level Set Point	Alarm: “Aerobic Tank Level LoLo” Tank may be leaking; Alert operator to investigate immediately. STOP EQ Pumps.
Aerobic Tank T-72000 pH - Lo	Indicates pH has dropped below the pH Lo Set Point	Alert: “Aerobic Tank pH Lo, adjust Alkalinity Dosing Rate”
Aerobic Tank T-72000 pH - Hi	Indicates pH has increased above the pH Hi Set Point	Alert: “Aerobic Tank pH Hi, adjust Alkalinity Dosing Rate”
Aerobic Tank T-72000 pH / Temperature Sensor Fault	Occurs when sensor AE 72094 returns non 4 20 mA signal	Alert: “Aerobic Tank pH / Temperature Sensor Fault”
Aerobic Tank T-72100 pH - Lo	Indicates pH has dropped below the pH Lo Set Point	Alert: “Aerobic Tank pH Lo, adjust Alkalinity Dosing Rate”
Aerobic Tank T-72100 pH - Hi	Indicates pH has increased above the pH Hi Set Point	Alert: “Aerobic Tank pH Hi, adjust Alkalinity Dosing Rate”
Aerobic Tank T-72100 pH / Temperature Sensor Fault	Occurs when sensor returns non 4 20 mA signal	Alert: “Aerobic Tank pH / Temperature Sensor Fault”
Process Blower B-75240A Fault	Indicates a mechanical failure of Process Blower B 75240A	Alarm: “Process Blower B 75240A Fault; switch to Process Blower B 75240B”
Process Blower B-75240B Fault	Indicates a mechanical failure of Process Blower B 75240B	Alarm: “Process Blower B 75240B Fault; switch to Process Blower B 75240A”
Process Blower B-75340A Fault	Indicates a mechanical failure of Process Blower B 75340A	Alarm: “Process Blower B 75340A Fault; switch to Process Blower B 75340B”
Process Blower B-75340B Fault	Indicates a mechanical failure of Process Blower B 75340B	Alarm: “Process Blower B 75340B Fault; switch to Process Blower B 75340A”
Process Blowers B-75240A/B Flow Rate Lo	Occurs when Process Blower is in RUN and FIT 75274 reads an airflow rate lower than the Process Blower Flow Rate Lo Set Point	Alert: “Process Blower Flow Rate Lo” Operator to investigate immediately; line may be broken or clogged
Process Blowers B-75340A/B Flow Rate Lo	Occurs when Process Blower is in RUN and FIT 75374 reads an airflow rate lower than the	Alert: “Process Blower Flow Rate Lo”

	Process Blower Flow Rate Lo Set Point	Operator to investigate immediately; line may be broken or clogged
Alkalinity Dosing Pump P-80500A/B Fault	Indicates a mechanical failure of the Alkalinity Dosing Pump	Alert: "Alkalinity Dosing Pump Fault" Switch to Backup Dosing Pump (installed on same skid)
Alkalinity Dosing Pump P-80600A/B Fault	Indicates a mechanical failure of the Alkalinity Dosing Pump	Alert: "Alkalinity Dosing Pump Fault" Switch to Backup Dosing Pump (installed on same skid)
Alkalinity Tank T-80500 Level Lo	Occurs when alkalinity day tank level drops below Lo Level Set Point	Critical Alarm: "Refill chemical tank for alkalinity adjustment"
Alkalinity Tank T-80600 Level Lo	Occurs when alkalinity day tank level drops below Lo Level Set Point	Critical Alarm: "Refill chemical tank for alkalinity adjustment"
Primary and Secondary Dosing Pump Fault	Indicates that both alkalinity dosing pumps have faulted	Alarm: "Refill chemical tank if necessary, or repair pump"

4.4 - MEMBRANE FILTRATION

Mixed liquor flows by gravity from the Aerobic Tanks (T 72000 and T 72100) into the Membrane Tanks (T 74000 1/2/3). Within each Membrane Tank, the Membrane Module (F 74000) filters the mixed liquor. The membranes have tiny pores (0.4µm) that prevent solids from entering the permeate side of the membrane but allow the passage of water. Permeation occurs during the PRODUCTION mode at a rate that is, on average, equal to the feed flow rate to the train to prevent accumulation of liquid in the Aerobic Tank and Membrane Tanks.

To prevent solids accumulation on the surface of the membranes, membranes permeate for a period of time followed by a "Relax" step where permeation is stopped for a short period of time. The default cycle includes a 7 minute Permeation period followed by a 1 minute Relax period. During Production and Standby, a Membrane Air Scour Blower (B 75400) provides air to the integrated coarse bubble diffusers to provide air scouring and reduce sludge buildup on the membrane fibers.

To prevent excessive solids accumulation within the Membrane Tank, the mixed liquor is returned to the Aerobic Tank via the RAS pumps (P 74600). The MLSS concentration shall be maintained by daily wasting of MLSS to remove bacteria from the system at the same rate at which they grow. The required daily wasting volume can be estimated by comparing the MLSS measurements taken during sampling with the target MLSS concentration. Biological growth varies with a number of factors and, as the system is operated, a steady state growth will occur, leading to the development of a consistent sludge wasting volume. The daily wasting volume shall be calculated and a "suggested wasting volume" shall be updated within the Sludge Wasting Screen on the HMI. The operator can then choose to manually adjust the daily wasting volume once the need for adjustment is confirmed. This is to prevent improper wasting due to erroneous MLSS concentration measurements. The calculation for "suggested wasting volume" is given in Section 4.7.

4.4.1 - MEMBRANE FILTRATION SYSTEM EQUIPMENT

EQUIPMENT	TAGS	QTY	DESIGN VALUE	NOTES
Membrane Tank	T 74000 1/2/3	3	6.6 m^3 each	
Membrane Module	F 74000 1/2/3	3 (1 per train)	1350 m^2 450 m^2 per module	
Membrane System Blower	B 75400 1/2/3	3	254 m^3/h per train	
Blower Air Mass Flowmeter	FIT 75474 1/2/3	3	0 – 300 m^3/h	

Permeate Pumps	P 79000 1/2/3	3	4.5 m^3/hr	Timer required to monitor permeate/relax cycles
Permeate Flow Meter	FIT 79074 1/2/3	3	0 15 m^3/hr	
Membrane Tank Level Sensor	LT 74060 1/2/3	3	0 – 3.0 m	
Permeate Pressure Sensor	PT 79045 1/2/3	3	100 to 100 kPa	
RAS Pumps	P 74600 1/2/3	3	18 m^3/hr	RAS pump also used for wasting sludge and draining the system
RAS Flow Meter	FIT 74674 1/2/3	3	0 25 m^3/hr	
UV System	UV 91000 1/2/3	3		inline

4.4.1.1 PERMEATE PUMPS

The Permeate Pumps (P 79000 1/2/3) are used to transport filtered water (permeate) from the Membrane Tank (T 74000 1/2/3) through the Membrane Module (F 74000 1/2/3), through the Permeate Flow Meter (FIT 79074 1/2/3), to the UV Disinfection system (UV 91000 1/2/3) and finally to one of two Permeate Tanks (T 79200 or T 79300). The pumps are equipped with VFDs so that they can control the flow rate of membrane filtration. The speed of the permeate pumps is adjusted to maintain the desired membrane tank level.

The permeate pumps are also used to transport treated water back to the membranes during CEB and CIP events by actuating valves on the permeate lines to change the direction of flow.

PRODUCTION AND STANDBY MODE

During PRODUCTION mode the Permeate Pump cycles between RUN and STOP to accommodate the required “permeation” and “relax” steps. In normal operation the permeation step duration is 7 minutes and the relax step duration is 1 minute. The status (Permeation/Relax/Standby) as well as a timer showing the time left within a permeation or relax step will be displayed on the HMI.

During the permeation step, the PLC adjusts the Permeate Pump speed using a cascade PID loop with the pump VFD and permeate flow meter to maintain the Membrane Tank Level Set Point.

The Process goes into STANDBY mode when the Membrane Tank – Lo Level Set Point is reached. This generally occurs where there is insufficient feed to the system. The process will return to PRODUCTION when the Membrane Tank Level reaches the Membrane Tank Level Set Point.

Trans Membrane Pressure (TMP)

The TMP is a measure of the degree of fouling that the membranes have experienced. It allows monitoring of changes in membrane permeability as a function of time to provide information on CEB and CIP performance and changes in feed water quality. The TMP is the change in pressure across the membrane and is calculated based on the membrane feed side hydrostatic pressure minus the permeate side pressure during permeation. It is calculated as the permeate side pressure minus the feed side pressure during backward flow.

$$TMP\ (kPa) = Feed\ Pressure - Permeate\ Pressure$$

and

$$TMP_{CLEAN}\ (kPa) = Permeate\ Pressure - Feed\ Pressure$$

where,

$$Feed\ Pressure\ (kPa) = [Membrane\ Tank\ Level\ (m) - Midlevel\ of\ Membrane\ (m)] \times \frac{9.807\ kPa}{m\ H2O}$$

and

$$\begin{aligned} Permeate\ Pressure\ (kPa) \\ = Permeate\ Pressure\ Reading\ (kPa) \\ + \Big\{[Level\ of\ Pressure\ Transducer\ Installation\ (m) \\ - Midlevel\ of\ Membrane\ (m)] \times \frac{9.807\ kPa}{m\ H2O}\Big\} \end{aligned}$$

note that the "Midlevel of Membrane" and "Level of Pressure Transducer Installation" values are measured from the bottom of the membrane tank.

Flux and Permeability

The permeability is a calculated parameter that normalizes the TMP for different flow rates. The flow rate per unit membrane area is called the "Membrane Flux" and it is calculated based on the equation below:

$$Flux\ \left(\frac{L}{m^2 h}\right) or\ (Lmh) = \frac{Flow\ Rate\ \left(\frac{L}{min}\right) \times 60\left(\frac{min}{h}\right)}{Membrane\ Area\ (m^2)}$$

The permeability is the flux divided by the TMP as given below:

$$Permeability\ (Lmh/bar) = \frac{Flux\ (Lmh)}{TMP\ (kPa)} x\ 100\ \frac{kPa}{bar}$$

Finally, to ensure accurate monitoring of permeability, the calculated permeability should be corrected for temperature. The following equation can be used to correct the permeability for temperature:

$$Permeability_{20^\circ C} = Permeability_{T^\circ C} \times 1.024^{(20-T)}$$

where T = the measured temperature.

4.4.1.2 RETURN ACTIVATED SLUDGE (RAS) PUMPS

The RAS pumps are used to return solids from the Membrane Tanks to the front end of the Aerobic Tank. This ensures that the biomass separated from the liquid during membrane filtration does not accumulate excessively within the Membrane Tank.

When the MBR train associated with a RAS Pump is in PRODUCTION mode or STANDBY mode, the RAS Pump will RUN. The RAS Pump Flowrate is adjustable by manually throttling the RAS Pump isolation valve.

4.4.1.3 MEMBRANE AIR SCOUR BLOWERS

The Membrane Air Scour Blowers are used to scour the membranes and reduce sludge buildup on the fibers. One blower is supplied per membrane tank. Under normal conditions, the blowers will always be in RUN.

4.4.1.4 ULTRAVIOLET SYSTEM

The UV disinfection system operates continuously in all modes other than OFF to provide disinfection of permeate before it enters the Permeate Tank. The PLC has a counter that totalizes the total time that the UV unit operates and provides an Alert when the bulb life nears its expected design period. This warning occurs after 8,760 hours (1 year) of operation and the bulbs should be replaced on an annual basis.

4.4.2 - MEMBRANE FILTRATION SYSTEM HMI INPUTS

HMI INPUT	INITIAL VALUE
Production Mode: Permeate Cycle	7 minutes
Production Mode: Relax Cycle	1 minute
Membrane Tank Level Set-Point	1.90 m
Membrane Tank Level LoLo Set-Point	1.70 m

Membrane Tank Level Lo Set-Point	1.80 m
Membrane Tank Level Hi Set-Point	2.00 m
Membrane Tank Level HiHi Set-Point	2.20 m
TMP Hi Set-Point	30 kPa
TMP HiHi Set-Point	40 kPa
TMP_{CLEAN} HiHi Set-Point	14 kPa
Permeate Pump Flow Rate LoLo Set-Point	1 m3/hr
RAS Pump Flow Rate LoLo Set-Point	9 m3/hr
Membrane Blower Flow Rate LoLo Set-Point	150 Nm^3/h
UV Intensity Lo	8.8 mW/cm2

4.4.3 - MEMBRANE FILTRATION SYSTEM ALARMS

ALARM OR ALERT	DESCRIPTION	ACTION
Membrane Tank 1 Level LoLo	Indicates Membrane Tank 1 level has reached LoLo level Set Point	Alarm: "Membrane Tank 1 Level LoLo" Train in STANDBY until Membrane Tank 1 Level reaches Set Point. STOP RAS Pump.
Membrane Tank 1 Level Lo	Indicates Membrane Tank 1 level has reached Lo level Trigger	Train 1 goes into STANDBY.
Membrane Tank 1 Level Hi	Indicates Membrane Tank 1 level has reached Hi level Setpoint	Alert: "Membrane Tank 1 Level Hi"
Membrane Tank 1 Level HiHi	Indicates Membrane Tank 1 level has reached HiHi level Set Point	Alarm: "Membrane Tank 1 Level HiHi" STOP Feed to train until membrane tank level drops to set point level. Note that an emergency overflow is installed on both membrane tanks that will allow a controlled overflow out of the container in case of emergencies.
Membrane Tank 1 Level Sensor Fault	Occurs when level sensor LT 74060 1 returns a non 4 20 mA signal	Alert: "Membrane Tank 1 Level Sensor Fault" Permeate Pumps in both trains operate off Membrane Tank 2 Level Sensor; CEBs

		and CIPs suspended until sensor is repaired
Membrane Tank 2 Level LoLo	Indicates Membrane Tank 2 level has reached LoLo level Set Point	Alarm: “Membrane Tank 2 Level LoLo” Train in STANDBY until Membrane Tank 1 Level reaches Set Point. STOP RAS Pump.
Membrane Tank 2 Level Lo	Indicates Membrane Tank 2 level has reached Lo level Trigger	Train 2 goes into STANDBY.
Membrane Tank 2 Level Hi	Indicates Membrane Tank 2 level has reached Hi level Setpoint	Alert: “Membrane Tank 2 Level Hi”
Membrane Tank 2 Level HiHi	Indicates Membrane Tank 2 level has reached HiHi level Set Point	Alarm: “Membrane Tank 2 Level HiHi” STOP Feed to train until membrane tank level drops to set point level. Note that an emergency overflow is installed on both membrane tanks that will allow a controlled overflow out of the container in case of emergencies.
Membrane Tank 2 Level Sensor Fault	Occurs when level sensor LT 74060 2 returns a non 4 20 mA signal	Alert: “Membrane Tank 2 Level Sensor Fault” Permeate Pumps in both trains operate off Membrane Tanks 1 Level Sensor; CEBs and CIPs suspended until sensor is repaired
Membrane Tank 3 Level LoLo	Indicates Membrane Tank 3 level has reached LoLo level Set Point	Alarm: “Membrane Tank 3 Level LoLo” Train in STANDBY until Membrane Tank 1 Level reaches Set Point. STOP RAS Pump.
Membrane Tank 3 Level Lo	Indicates Membrane Tank 3 level has reached Lo level Trigger	Train 3 goes into STANDBY.
Membrane Tank 3 Level Hi	Indicates Membrane Tank 3 level has reached Hi level Setpoint	Alert: “Membrane Tank 3 Level Hi”
Membrane Tank 3 Level HiHi	Indicates Membrane Tank 3 level has reached HiHi level Set Point	Alarm: “Membrane Tank 3 Level HiHi” STOP Feed to train until membrane tank level drops to set point level. Note that an emergency overflow is installed on both membrane tanks that will allow a

		controlled overflow out of the container in case of emergencies.
Membrane Tank 3 Level Sensor Fault	Occurs when level sensor LT 74060 3 returns a non 4 20 mA signal	Alert: “Membrane Tank 3 Level Sensor Fault” STOP sump pump P 12300 and close FV 74050 3. Put train 3 into STANDBY until sensor is repaired.
Train 1 - TMP Hi	Indicates TMP has reached Hi Set Point in Train 1.	Alert: “Train 1 TMP Hi Schedule a CIP as soon as possible.”
Train 1 - TMP HiHi	Indicates TMP has reached HiHi Set Point in Train 1.	Alarm: “Train 1 TMP HiHi – CIP critical” – STOP Permeate Pump and continue to RUN Train 2 and Train 3 only until alarm is cleared.
Train 1 – TMP_{CLEAN} HiHi	Indicates TMP has reached HiHi Set Point in Train 1 during a CEB or CIP	Alarm: “Train 1 TMP_{CLEAN} HiHi – Check Cleaning Regimen” – STOP CEBs and CIPs on Train 1 until TMP alarm cleared.
Train 2 - TMP Hi	Indicates TMP has reached Hi Set Point in Train 2	Alert: “Train 2 TMP Hi Schedule a CIP as soon as possible.”
Train 2 - TMP HiHi	Indicates TMP has reached HiHi Set Point in Train 2	Alarm: “Train 2 TMP HiHi – CIP critical” – STOP Permeate Pump and continue to RUN Train 1 and Train 3 until alarm is cleared.
Train 2 – TMP_{CLEAN} HiHi	Indicates TMP has reached HiHi Set Point in Train 2 during a CEB or CIP	Alarm: “Train 2 TMP_{CLEAN} HiHi – Check Cleaning Regimen” – STOP CEBs and CIPs on Train 2 until TMP alarm cleared.
Train 3 - TMP Hi	Indicates TMP has reached Hi Set Point in Train 2	Alert: “Train 3 TMP Hi Schedule a CIP as soon as possible.”
Train 3 - TMP HiHi	Indicates TMP has reached HiHi Set Point in Train 2	Alarm: “Train 3 TMP HiHi – CIP critical” – STOP Permeate Pump and continue to RUN Train 1 and Train 2 until alarm is cleared.
Train 3 – TMP_{CLEAN} HiHi	Indicates TMP has reached HiHi Set Point in Train 2 during a CEB or CIP	Alarm: “Train 3 TMP_{CLEAN} HiHi – Check Cleaning Regimen” – STOP CEBs and CIPs on Train 2 until TMP alarm cleared.

Train 1 Permeate Pressure Sensor Fault	Occurs when pressure sensor PT 79045 1 returns a non 4 20 mA signal	Alarm: “Permeate Pressure Sensor Fault” – STOP Train 1 and continue to RUN Train 2 and Train 3 only until pressure sensor is repaired
Train 2 Permeate Pressure Sensor Fault	Occurs when pressure sensor PT 79045 2 returns a non 4 20 mA signal	Alarm: “Permeate Pressure Sensor Fault” – STOP Train 2 and continue to RUN Train 1 and Train 3 only until pressure sensor is repaired
Train 3 Permeate Pressure Sensor Fault	Occurs when pressure sensor PT 79045 3 returns a non 4 20 mA signal	Alarm: “Permeate Pressure Sensor Fault” – STOP Train 3 and continue to RUN Train 1 and Train 2 only until pressure sensor is repaired
Permeate Flow Rate LoLo (Train 1, 2 and 3)	Occurs when Permeate Pump is in RUN and FIT 79074 reads less than the Permeate Flow Rate LoLo Set Point	Alarm: “Permeate Flow Rate LoLo – Train 1/2/3” STOP Permeate Pump 1/2/3– this indicates a possible broken pipe or clogged pipe/pump.
Permeate Pump Fault (Train 1, 2 or 3)	Indicates a mechanical failure of the Permeate Pump	Alarm: “Permeate Pump Fault” Stop Feed to Train with Fault (close FV 74050).
Permeate Flow Meter Fault (Train 1, 2 or 3)	Occurs when Permeate Flow Meter returns non 4 20 mA signal	Alert: “Permeate Flow Meter Fault” STOP CEBs and CIPs on that train until fault is cleared
RAS Pump Fault (Train 1, 2 or 3)	Indicates a mechanical failure of the RAS Pump	Alarm: “RAS Pump Fault” Stop Feed to Train with Fault (close FV 74050).
RAS Flow Meter Fault (Train 1, 2 or 3)	Occurs when RAS Flow Meter returns non 4 20 mA signal	Alert: “RAS Flow Meter Fault” Disable Automatic Sludge Wasting
RAS Flow Rate LoLo (Train 1, 2 or 3)	Occurs when RAS Pump is in RUN and FIT 74074 reads less than the RAS Flow Rate Lo Set Point	Alarm: “RAS Flow Rate LoLo – Train 1/2/3" STOP RAS Pump 1/2/3 – this indicates a possible broken pipe or clogged pipe/pump.
Membrane Blower Fault (Train 1, 2 or 3)	Indicates a mechanical failure of the Membrane Blower	Alarm: “Membrane Blower Fault” Stop Feed to Train (close FV 74050)
Membrane Blower Flow Rate LoLo (Train 1, 2 or 3)	Occurs when Membrane Blower is in RUN and FS 75474 is tripped	Alarm: “Membrane Blower Flow Rate LoLo” Stop feed to Train with fault (close FV 74050) and indicate that operator must

		investigate (possible broken or clogged line)
UV System Fault (Train 1, 2 or 3)	Indicates that the UV System has faulted	Alert: “UV System Fault – Train 1/2/3"
UV Bulb Life	Indicates UV System bulbs are nearing the end of predicted life	Alert: “Schedule UV Bulb Replacement”
UV Intensity	Monitors UV Intensity	Alert: “Schedule UV Bulb Replacement”

4.5 - MEMBRANE CLEANING

When a CEB or CIP is initiated, the Permeate Pump (P 79000) is used to transport treated water from the Permeate Tank (T 79200), through the Permeate Flow Meter (FIT 79074), Permeate Pump (P 79000), past the Air Release Valve (FV 31026) and into the membranes (F 74000). Cleaning chemicals are dosed inline to achieve the desired CEB or CIP concentration. For this mode, the flow direction is reversed automatically by switching electrically actuated valves to achieve the correct flow path. The PLC controls the permeate pump speed to achieve the “CEB/CIP Flow Rate,” which is an input on the HMI.

4.5.1 - MEMBRANE CLEANING EQUIPMENT

4.5.1.1 CLEANING CHEMICAL DOSING PUMPS

The CEB/CIP dosing pumps are used to inject chemicals into the cleaning chemical line when a CEB or CIP are conducted. The chemical is mixed with treated water that is pumped into the inside of the membranes to achieve the desired cleaning concentration.

There are two (2) Cleaning Chemical Dosing Pumps for the entire plant; one for dosing Sodium Hypochlorite (P 83500A) and one for dosing Citric Acid (P 83700). These dosing pumps receive a digital signal from the PLC to initiate chemical dosing during CEB or CIP processes; however, they must be calibrated to provide the correct flow rate for a given application. Each dosing pump has feed lines to each train. When a CEB or CIP is conducted on Membrane Tank 1, for example, the dosing valve for Train 1 will open when the dosing pump is in RUN and the dosing valve for the other train remains closed. Since CEB processes are conducted on a weekly basis, the PLC will be programmed to ensure that the different trains schedule CEBs at different times. The CIP process is conducted relatively infrequently (quarterly). When a CIP is conducted, the Cleaning Chemical Dosing Pumps must be re calibrated to achieve the higher concentration associated with CIPs and then returned to the CEB dosing rate after the CIP is completed.

A dedicated CEB/CIP screen can be found on the HMI where CEB events can be scheduled or manually started by the operator. During a CEB the HMI displays the current step in the sequence and the current status of the temporal and volumetric counters associated with each step. The same steps are used in a CEB and CIP but with different chemical dosing rates and soak durations. All CEB processes are initiated automatically based on a schedule that can be set on the HMI. Either chlorine or citric acid (one chemical

only) can be selected as the CEB chemical. Since they are conducted on a weekly basis, a specific day of the week and time of day can be set. The day of the week is identified with a number (1 7; corresponding to Mon Sun) and a second number defines the hour (1 24) based on a 24 hr clock. Note, that the system will be programmed such that only one train can operate a CEB or CIP at any given time.

CEB/CIP Prepare

The Prepare Step is a short waiting step to allow the process changes to take effect. The membrane blower and RAS pump are turned OFF at the beginning of this Step and waiting allows the process to settle and adjust for the upcoming CEB/CIP.

CEB/CIP Injection

During the Injection Step, treated water from the Permeate Tank (T 79200 for trains 1 or 2, T 79700 for train 3) is drawn through the Permeate Pump (P 79000), through the Permeate Flow Meter (FIT 79074), past the Air Relief Valve (FV 31026) and then to the Membranes. The Dosing Pump, either NaOCl (P 83500) or Citric Acid (P 83700) starts and its associated Dosing Valve (FV 83576 for NaOCl or FV 83776 for Citric Acid) is opened. The cumulative volume of blended chemical as measured by FIT 79074 that is sent to the Membranes during the clean is totalized on a counter. Once the totalizer reaches the CEB or CIP Injection Volume Set Point, the Injection step ends. The Air Relief Valve is opened during the CEB and CIP to allow the removal of air and prevent the possible build up of pressure within the permeate line. The membranes must never experience a backpulse TMP (from the inside out) greater than 14 kPa. The Permeate Pressure Sensor (PT 79045) monitors this pressure to ensure the limit is never breached; however, the air relief valve is designed as a back up to never allow excessive pressures to occur in this line.

CEB/CIP Soak

The CEB/CIP Soak Step allows the membrane to be in contact with the cleaning chemical for a period of time to allow it to take effect. For CEBs this step is relatively short (2 minutes); for CIPs this lasts several hours to ensure adequate permeability recovery.

CEB/CIP Flush Step

The CEB/CIP Flush Step is similar to the Injection Step but without the chemical injection. Treated water is sent back to the membranes and flushes the chemical out of the membranes and into the activated sludge. At the beginning of this Step the RAS pump (P 74600) and Membrane Blower (B 7400) both RUN such that the chemical that is pushed into the Activated Sludge is diluted and consumed.

CEB/CIP Finish Step

The CEB/CIP Finish Step is designed to allow additional time for the Activated Sludge to recirculate in the bio reactors. It is similar to Standby but with the feed valve to the train closed until the counter has reached the CEB or CIP Finish Step Duration Set Point.

4.5.2 - MEMBRANE CLEANING HMI INPUTS

HMI INPUT	INITIAL VALUE
CEB/CIP Flow Rate	2 m^3/hr
CEB Prepare Tank Level SP	1.7 m
CEB Injection Volume Set-Point	0.9 m^3
CEB Soak Duration	2 min
CEB Flush Volume Set-Point	0.9 m^3
CEB Finish Duration	30 s
CIP Prepare Membrane Tank Level SP	1.7 m
CIP Injection Volume Set-Point	0.9 m^3
CIP Soak Duration	240 min
CIP Flush Volume Set-Point	0.9 m^3
CIP Finish Duration	30 s

4.5.3 - MEMBRANE CLEANING ALARMS

ALARM OR ALERT	DESCRIPTION	ACTION
Hypochlorite Dosing Pump Fault (Train 1, 2 or 3)	Indicates a mechanical failure of the chemical dosing pump	Alarm: "Hypo Dosing Pump Fault" STOP Hypo CEBs and CIPs until fault is cleared
Citric Acid Dosing Pump Fault	Indicates a mechanical failure of the chemical dosing pump	Alarm: "Citric Dosing Pump Fault" STOP Citric Acid CEBs and CIPs until fault is cleared

4.5.4 - CHEMICAL ADDITION CHART

CLEANING CHEMICAL	APPLICATION	RECIPE
Sodium Hypochlorite (NaOCl)	Sodium Hypochlorite is an oxidant and is used to provide cleaning of typical membrane foulants (organic foulants) for this application. This chemical should be used for cleaning as a first response and will provide good results most of the time.	STOCK NaOCl: 10.3% CEB Concentration: 300 500 mg/L CIP Concentration: 3 5 g/L Volume of chemical for a CEB: 7.5 L Volume of chemical for a CIP: 75 L

		Frequency of a CEB: weekly per train Frequency of a CIP: quarterly per train
Citric Acid	Citric Acid is used to provide cleaning for the removal of inorganic substances from the membrane. In most cases this chemical is not required unless there is a concern of accumulation of inorganic substances.	STOCK Citric Acid: Powdered Form 100% CIP Concentration: 1% wt. Mass of chemical for a CIP: 10 kg Frequency of a CIP: annually per train

4.6 - PERMEATE POST-TREATMENT

Permeate from the UV system (UV 91000 1/2) flows to the combined Permeate Tank (T 79200), where it is stored temporarily for cleans or pumped to the discharge point by the effluent pumps (P 79600A/B). Similarly for membrane train 3, permeate from UV system (UV 91000 3) flows to the Permeate Tank (T 79200), where it is stored temporarily for cleans or pumped to the discharge point by the effluent pumps (P 79600A/B).

4.6.1 - PERMEATE POST TREATMENT EQUIPMENT

EQUIPMENT	TAGS	QTY	DESIGN VALUE	NOTES
Permeate Tank	T 79200 T 79300	2	1.5 m3	HDPE Rectangular Tank
Effluent Pumps	P 79600A/B P 79700A/B	4	9 m3/hr each	Duty/standby configuration
Permeate Tank Level Sensor	LT 79060 LT 79160	2	0 – 1.5 m	
Effluent pH Sensor	AIT 79093 AIT 79193	2	pH: 0 14	Target pH 6 8
Effluent Turbidity Sensor	AIT 79089 AIT 79189	2	0 5 NTU	
Effluent Flowmeter	FIT 79274 FIT 79374	2	0 15 m3/hr	Measures the effluent flow from the plant

4.6.1.1 EFFLUENT PUMPS

The Effluent Pumps will operate based on the level in the Permeate Tanks. There are two effluent pumps (P 79600A/B) The Effluent Pumps are each set up to operate at the design flow rate of the plant. This flow can be monitored using the effluent flowmeters (FIT 79274 and FIT 79374).

Under normal operation, one pump will operate. The single pump will RUN at the "Hi" Set Point and turn STOP at the "Lo" Set Point. In the event of an upset where the Permeate Tank level increases, an emergency backup is available to prevent overflowing from occurring. If the Permeate Tank level reaches the "HiHi" level, the second Effluent Pump will RUN to increase the flow from the system. Once the Permeate Tank level falls below the Lo Level Setpoint, both effluent Pumps will STOP. When the level rises above the "Hi" Set Point again the system will continue operation as normal with one pump running.

The Effluent Pump status and Flow Rates are determined in response to the Permeate Tank Level Sensor (LT 79060 or LT 79160) as follows:

TANK LEVEL	DESCRIPTION	NOTES
Below LoLo Level Set-Point	Notification	This is an alarm that indicates the Permeate Tank is empty and there is no permeate available for performing cleaning.
Below Lo Level Set-Point	STOP Effluent Pumps	This STOPs the Effluent Pumps from running and ensures adequate permeate is available for cleaning.
Above Hi Level Set-Point	RUN Effluent Pump.	During normal operation a single Effluent Pump is in RUN and the flow rate should be adjusted to be slightly higher than the Equalized Feed Flow Set Point. The operator can manually adjust the flow if desired to meet specific plant needs. This will cause the Effluent Pump to RUN when the permeate tank hits the Hi level and continue until the permeate tank hits the Lo level.
Above HiHi Level Set-Point	RUN both Effluent Pumps.	When the Effluent Tank level increases to the HiHi Level Set Point, a critical alert occurs and the second Effluent Pump will RUN. Both pumps will

		continue to RUN until the Permeate Tank level drops to the Lo Level Set Point. With both pumps running, the total flow rate will increase to prevent an overflow. Note that an overflow line is installed on the Permeate tank to ensure any overflow is directed out of the container.

Note: Effluent Pumps P 79600A/B and P 79700A/B should alter operation after every time the pumps STOP unless a Pump Fault indicates otherwise. This will reduce the number of Starts/Stops that the pumps undergo as the level in the permeate tank moves from between the Hi and Lo Levels.

4.6.2 - PERMEATE POST TREATMENT HMI INPUTS

The following values are input on the HMI and can be adjusted to optimize system operation.

HMI INPUT	INITIAL VALUE
Permeate Tank T-79200 Level – LoLo Set-Point	0.8 m
Permeate Tank T-79200 Level – Hi Set-Point	1.2 m
Permeate Tank T-79200 Level – HiHi Set-Point	1.5 m
Effluent pH AE-79093 - Lo Set-Point	6.0
Effluent pH AE-79093 - Hi Set-Point	8.0
Effluent Turbidity AE-79089 - Hi Set-Point	2.0 NTU
Effluent Flow Rate FIT-79274 - LoLo Set-Point	1 m3/hr
Permeate Tank T-79300 Level – LoLo Set-Point	0.8 m
Permeate Tank T-79300 Level – Hi Set-Point	1.2 m
Permeate Tank T-79300 Level – HiHi Set-Point	1.5 m
Effluent pH AE-79193 - Lo Set-Point	6.0
Effluent pH AE-79193 - Hi Set-Point	8.0
Effluent Turbidity AE-79189 - Hi Set-Point	2.0 NTU
Effluent Flow Rate AE-79189 - LoLo Set-Point	1 m3/hr

4.6.3 - PERMEATE POST TREATMENT ALARMS

ALARM OR ALERT	DESCRIPTION	ACTION
Effluent Pump P-79600A Fault	Indicates mechanical failure of Effluent Pump A	Alert: "Effluent Pump P 79600A Fault" Turn Effluent Pump P 79600A to OFF and switch operation to Effluent Pump P 79600B
Effluent Pump P-79600B Fault	Indicates mechanical failure of Effluent Pump B	Alert: "Effluent Pump P 79600B Fault" Turn Effluent Pump P 79600B to OFF and switch operation to Effluent Pump P 79600A
Effluent Flow Rate - LoLo	Occurs when Effluent Pumps are ON and FIT 79274 reads less than the Effluent Flow Rate LoLo Set Point	Alarm: "Effluent Flow Rate LoLo" STOP Effluent Pumps – this indicates a possible broken pipe or clogged pipe/pump.
Permeate Tank Level – LoLo	Occurs when Permeate Tank level drops below the LoLo Level Set Point	Alert: "Permeate Tank Level LoLo" STOP Effluent Pumps
Permeate Tank T-79200 Level - HiHi	Occurs when Permeate Tank T 79200 level rises above HiHi Level Set Point	Critical Alarm: "Permeate Tank T 79200 Level HiHi" RUN both Effluent Pumps in tandem until Tank Level drops below the Hi Level Set Point
Permeate Tank T-79200 Level Sensor Fault	Occurs if the transmitter LT 79060 returns non 4 20 mA signal	Alert: "Permeate Tank – Level Sensor LT 79060 Fault" Effluent Pumps P 79600A/B continue to RUN until Level Sensor Fault cleared
Effluent pH AE-79093 - Lo	Indicates pH is below the pH Lo Set Point	Alert: "Effluent pH Lo"
Effluent pH AE-79093 - Hi	Indicates pH is above the pH Hi Set Point	Alert: "Effluent pH Hi"
Effluent pH Sensor AE-79093 Fault	Occurs when sensor AE 79093 returns non 4 20 mA signal	Alert: "Effluent pH Sensor Fault"
Effluent Turbidity AE-79089 – Hi	Indicates turbidity is above the Turbidity – Hi Setpoint	Alert: "Effluent turbidity Hi"
Effluent Turbidity Sensor AE-79093 Fault	Occurs when sensor AE 79093 returns non 4 20 mA signal	Alert: "Effluent turbidity Sensor AE 79083 Fault"

Effluent Flowmeter FIT-79274 Fault	Occurs if the flowmeter FIT 79274 returns non 4 20 mA signal	Alarm: "Effluent Flowmeter FIT 79274 Fault" Effluent Pumps P 79600A/B continue to RUN
Effluent Pump P-79700A Fault	Indicates mechanical failure of Effluent Pump P 79700A	Alert: "Effluent Pump P 79700A Fault" Turn Effluent Pump P 79700A to OFF and switch operation to Effluent Pump P 79700B
Effluent Pump P-79700B Fault	Indicates mechanical failure of Effluent Pump P 79700B	Alert: "Effluent Pump P 79700B Fault" Turn Effluent Pump P 79700B to OFF and switch operation to Effluent Pump P 79700A
Effluent Flow Rate - LoLo	Occurs when Effluent Pumps are ON and FIT 79374 reads less than the Effluent Flow Rate LoLo Set Point	Alarm: "Effluent Flow Rate LoLo" STOP Effluent Pumps P 79700A and P 79700B – this indicates a possible broken pipe or clogged pipe/pump.
Permeate Tank T-79300 Level – LoLo	Occurs when Permeate Tank T 79300 level drops below the LoLo Level Set Point	Alert: "Permeate Tank T 79300 Level LoLo" STOP Effluent Pumps P 79700A and P 79700B
Permeate Tank T-79300 Level - HiHi	Occurs when Permeate Tank T 79300 level rises above HiHi Level Set Point	Critical Alarm: "Permeate Tank T 79300 – Level HiHi" RUN both Effluent Pumps in tandem until Tank Level drops below the Hi Level Set Point
Permeate Tank T-79300 Level Sensor Fault	Occurs if the transmitter LT 79160 returns non 4 20 mA signal	Alert: "Permeate Tank – Level Sensor LT 79160 Fault" Effluent Pumps P 79700A/B continue to RUN until Level Sensor Fault cleared
Effluent pH - Lo	Indicates pH is below the pH Lo Set Point	Alert: "Effluent pH Lo"
Effluent pH - Hi	Indicates pH is above the pH Hi Set Point	Alert: "Effluent pH Hi"
Effluent pH Sensor AE-79193 Fault	Occurs when sensor returns non 4 20 mA signal	Alert: "Effluent pH Sensor Fault"
Effluent Turbidity – Hi	Indicates turbidity is above the Turbidity – Hi Setpoint	Alert: "Effluent turbidity Hi"

Effluent Turbidity Sensor AE-79189 Fault	Occurs when sensor returns non 4 20 mA signal	Alert: “Effluent turbidity Sensor Fault”
Effluent Flowmeter FIT-79194 Fault	Occurs if the flowmeter FIT 79194 returns non 4 20 mA signal	Alarm: “Effluent Flowmeter Fault” Effluent Pumps P 79700A/B continue to RUN

4.7 - SLUDGE HANDLING SYSTEM

The excess sludge that is produced within a bioreactor is known as Waste Activated Sludge (WAS). Each Return Activated Sludge (RAS) line has a tee after the RAS Flow Meter (FIT 74674) where the RAS can be redirected to the Sludge Storage Tank by opening the Sludge Wasting Valve (FV 96001). One Sludge Holding Tank is installed for all three trains. Wasting occurs once per day based on an HMI input called "Daily Sludge Wasting Volume". A timer is implemented that allows wasting after 24 hours of plant operation as measured by flow from FIT 74674 (to the Aerobic Tank). This ensures that wasting occurs only during PRODUCTION. Since there are 3 Membrane Trains that all have the ability to conduct sludge wasting, wasting will be alternated between the three trains every three days.

Once the valve has been actuated to redirect the Sludge to the Sludge Storage Tank, the PLC uses the RAS Flow Meter to totalize the volume of sludge that is sent to the Sludge Storage Tank. Once the Daily Sludge Wasting Volume has been wasted, the valve closes, and flow is directed back to the RAS line. The volume of sludge that needs to be wasted is a function of the MLSS measured in the Aerobic Tank and the BOD loading rate of the plant. The system will operate well with MLSS values in the range of 7 12 g/L, and this value can be adjusted for lower or higher BOD loading rates. The design MLSS value is 10 g/L. The system will automatically waste the "Daily Sludge Wasting Volume" input into the HMI. The required daily wasting value can be estimated based on the following equation (note: negative values will result in zero sludge wasting):

$$Calculated\ wasting\ volume\ to\ maintain\ MLSS\ concentration\ (m^3)$$

$$= 2\%\ of\ the\ volume\ of\ water\ treated\ yesterday + \frac{\left(1 - \frac{\text{target MLSS concentration } (g/L)}{\text{current MLSS concentration (from lab) } (g/L)}\right) \times 76\ m^3 (Total\ Process\ Volume)}{7\ days}$$

Where,

MLSS g/L = the measured MLSS concentration (based on a weekly sample taken from the Aerobic tank and analyzed for MLSS at a laboratory).

Recommendations:

- ***i) It is recommended that after start-up NO WASTING is conducted for the first 2 weeks of operation unless the MLSS is above 4 g/L.***
- ***ii) As of 2 weeks after biological seeding and steady process operation it is recommended to waste at least 1% of the total daily flow each day to prevent accumulation of inert solids as the bacteria concentration grows to the design values.***

The Sludge Storage Tank has a volume of 19 m^3 and is designed to handle the amount of sludge produced over a 5 7 day period at the maximum design flow rate. The Sludge Tank is aerated continuously by the Sludge Blower (B 75800) that feeds air to coarse bubble diffusers (CBD 96086) to keep the sludge in an

aerobic state and encourage aerobic digestion. The level of sludge in the Sludge Storage Tank is measured by the Sludge Storage Tank Level Sensor (LT 96060).

In order to minimize the WAS volume, a decant/overflow line is installed in each sludge holding tank to allow it to act as a thickener. The WAS can be thickened (concentrated) by stopping aeration for a period of time (~1 hour) to allow the solids to settle. As the solids settle within the sludge tank an interface will appear between the clear liquid (called supernatant) and the concentrated sludge. The decant line is then opened manually by the operator, and the supernatant is sent back to the Sump Tank. This will allow the sludge concentration to be increased by 2 3 times the MLSS concentration. The PLC will notify the operator when the Sludge Tank reaches the Hi level and indicate that a decant should be conducted.

4.7.1 - SLUDGE HANDLING SYSTEM EQUIPMENT

EQUIPMENT	TAGS	CONFIGURATION	DESIGN VALUE	NOTES
Sludge Storage Tank	T 96000	1	19 m^3	Minimum 5 day capacity
Coarse Bubble Diffusers	CBD 96086	1	N/A	
Sludge Blower	B 75800	1	50 m^3/hr at 3 m H_2O	
Sludge Storage Tank Level Sensor	LT 96060	1	0 – 2.5 m H_2O	
Sludge Wasting Valve	FV 96001 1/2/3	3	N/A	

4.7.1.1 SLUDGE BLOWER

The Sludge Blower is used to supply oxygen to the Sludge Storage Tank in order to maintain an aerobic environment and provide mixing. One blower is supplied for the tank, and under normal conditions, the blower will always be in RUN.

4.7.2 - SLUDGE HANDLING SYSTEM HMI INPUTS

HMI INPUT	INITIAL VALUE
Daily Sludge Wasting Volume	4.3 m^3*
Sludge Storage Tank Level Hi	2.0 m
Current MLSS concentration (from lab)	g/L
Target MLSS concentration (from lab)	g/L

Sludge Storage Tank Level HiHi	2.2 m
Suggested Wasting Volume	"displayed based on calculated value" m^3

*Disable for the first 2 weeks of operation

4.7.3 - SLUDGE HANDLING SYSTEM ALARMS

ALARM OR ALERT	DESCRIPTION	ACTION
Sludge Storage Tank Level Hi	Indicates the level in the Sludge Storage Tank has reached the Hi Level Set Point	Alert: "Sludge Storage Tank Level Hi. Conduct Decant; check new level and Schedule Sludge Truck Out."
Sludge Storage Tank Level HiHi	Indicates the level in the Sludge Storage Tank has reached the HiHi Level Set Point	Alarm: "Sludge Storage Tank Level HiHi." Disable sludge wasting. Note that an emergency overflow in the Sludge Tank will direct excess volume to the Sump Tank.
Sludge Storage Tank Level LoLo	Indicates the level in the Sludge Storage Tank has reached the LoLo Level Set Point and is at the Coarse Bubble Diffusers	Alert: "Sludge Storage Tank Level LoLo" STOP Sludge Blower until the level increases above the LoLo Level.
Sludge Tank Level Sensor Fault	Occurs when level sensor returns a non 4 20 mA signal	Alarm: "Sludge Tank Level Sensor Fault." STOP FV 96001 until fault cleared.

8.2 - ALARMS LIST

	Alarm List								
CUSTOMER:	Meliadine		Created by:	Vincent Roberge	Revision:	01			
PROJECT NUMBER:	20C1131 (previously U65875)		Revised by:	Adam Moore					
DOCUMENT NUMBER:	20C1131-10		Date:	30-06-2016 (rev 00)					
				30-06-2020 (rev 01)					

TYPE	DESCRIPTION (HMI MESSAGE)	When Active	Deadband	SETPOINT	UNITS	Severity	PLC ACTION	P&ID #	Rev
DIGITAL	Main Control Panel Emercengy Stop				-	4	Stop	NA	0
DIGITAL	Panel 120V Detect				-	4	Stop	NA	0
DIGITAL	Remote IO Emercengy Stop				-	4	Stop	NA	0
DIGITAL	RIO 120V Detect				-	4	Stop	NA	0
DIGITAL	Alm_RIO101_LEAK RIO 101 Leak Fault Alm					4	Notification	U65875-C01-0110	0
DIGITAL	Alm_RIO101_CH4 RIO 101 CH4 HiHi Alm			TBD	ppm	4	Notification	U65875-C01-0110	0
DIGITAL	Alm_RIO101_H2S RIO 101 H2S HiHi Alm			TBD	ppm	4	Notification	U65875-C01-0110	0
ANALOG	Alm_Hi - FI-19274 Equalized Water From Equalization Tank Flow Indicating Transmitter High			9	m^3/h	3	Notification	U65875-C01-0110	0
ANALOG	Alm_LoLo - FI-19274 Equalized Water From Equalization Tank Flow Indicating Transmitter Low Low			1	m^3/h	4	Notification	U65875-C01-0110	0
ANALOG	Alm_Hi - FI-12274 Screened Water to Aerobic Tank Flow Indicating Transmitter High			9	m^3/h	4	Notification	U65875-C01-0110	0
ANALOG	Alm_Lo - FI-12274 Screened Water to Aerobic Tank Flow Indicating Transmitter Low			1	m^3/h	3	Notification	U65875-C01-0110	0
ANALOG	Alm_HiHi - LT-12060 Screened Water Tank T-12000 Level Transmitter High High			3.6	m	4	Stop EQ Pumps	U65875-C01-0110	0
ANALOG	Alm_LoLo - LT-12060 Screened Water Tank T-12000 Level Transmitter Low Low			0.3	m	4	Stop All Sump Pumps, Notification	U65875-C01-0110	0
DIGITAL	Alm_Lo - LAL-12061 Screened Water Tank T-12000 Low Level Switch				-	3	Stop All Sump Pumps	U65875-C01-0110	0
DIGITAL	Alm_Hi - LAH-12062 Screened Water Tank T-12000 High Level Switch				-	3	Start 2nd Sump Pump, Stop EQ Pumps, Notification	U65875-C01-0110	0
DIGITAL	Alm_YA - SCR-11200A Fine Screen SCR-11200A Fault Alarm				-	3	Notification	U65875-C01-0110	0
DIGITAL	Alm_YA - SCR-11200B Fine Screen SCR-11200B Fault Alarm				-	3	Notification	U65875-C01-0110	0
DIGITAL	Alm_YI - SCR-11200A Fail To Start Alarm				-	3	Notification	U65875-C01-0110	0
DIGITAL	Alm_YI - SCR-11200A Fail To Stop Alarm				-	3	Notification	U65875-C01-0110	0
DIGITAL	Alm_YI - SCR-11200B Fail To Start Alarm				-	3	Notification	U65875-C01-0110	0
DIGITAL	Alm_YI - SCR-11200B Fail To Stop Alarm				-	3	Notification	U65875-C01-0110	0
ANALOG	Alm_Hi - FIT-11274 Waste Water Flow Indicating Transmitter to Equalization Tanks High			106	m^3/h	3	Notification	U65875-C01-0190	0
ANALOG	Alm_Lo - FIT-11274 Waste Water Flow Indicating Transmitter to Equalization Tanks Low			1	m^3/h	3	Notification	U65875-C01-0190	0
ANALOG	Alm_HiHi - LT-19060A Equalization Tank T-19000A Level Transmitter High High			6	m	4	Critical Alarm	U65875-C01-0190	0
ANALOG	Alm_Hi - LT-19060A Equalization Tank T-19000A Level Transmitter High			4	m	3	Notification; equalization tank level High	U65875-C01-0190	0
ANALOG	Alm_Lo - LT-19060A Equalization Tank T-19000A Level Transmitter Low			1	m	3	No Action	U65875-C01-0190	0
ANALOG	Alm_LoLo - LT-19060A Equalization Tank T-19000A Level Transmitter Low Low			0.8	m	4	Stop pump; train in standby	U65875-C01-0190	0
ANALOG	Alm_HiHi - LT-19060B Equalization Tank T-19000A Level Transmitter High High			6	m	4	Critical alarm	U65875-C01-0190	0
ANALOG	Alm_Hi - LT-19060B Equalization Tank T-19000A Level Transmitter High			4	m	3	Notification; equalization tank level high	U65875-C01-0190	0
ANALOG	Alm_Lo - LT-19060B Equalization Tank T-19000A Level Transmitter Low			1	m	3	No Action	U65875-C01-0190	0
ANALOG	Alm_LoLo - LT-19060B Equalization Tank T-19000A Level Transmitter Low Low			0.8	m	4	Stop pump; train in stanby	U65875-C01-0190	0
DIGITAL	Alm_YA - P-19200A Equalization pump P-19200A Fault Alarm				-	4	Stop pump; Use Standby Pump; Notification	U65875-C01-0190	0
DIGITAL	Alm_YA - P-19200B Equalization pump P-19200B Fault Alarm				-	4	Stop pump; Use Standby Pump; Notification	U65875-C01-0190	0
DIGITAL	Alm_YI - P-19200A Fail To Start Alarm				-	4	Stop pump; Use Standby Pump; Notification	U65875-C01-0190	0
DIGITAL	Alm_YI - P-19200A Fail To Stop Alarm				-	4	Stop pump; Use Standby Pump; Notification	U65875-C01-0190	0
DIGITAL	Alm_YI - P-19200B Fail To Start Alarm				-	4	Stop pump; Use Standby Pump; Notification	U65875-C01-0190	0
DIGITAL	Alm_YI - P-19200B Fail To Stop Alarm				-	4	Stop pump; Use Standby Pump; Notification	U65875-C01-0190	0
ANALOG	Alm_HiHi - LT-72060 Aerobic Tank T-73000 Level Transmitter High High			6.2	m	3	Stop EQ Pumps; Notification	U65875-C01-0720	0
ANALOG	Alm_Hi - LT-72060 Aerobic Tank T-73000 Level Transmitter High			6	m	3	Notification	U65875-C01-0720	0
ANALOG	Alm_Lo - LT-72060 Aerobic Tank T-73000 Level Transmitter Low			4	m	3	Notification	U65875-C01-0720	0
ANALOG	Alm_LoLo - LT-72060 Aerobic Tank T-73000 Level Transmitter Low Low			3	m	4	Stop EQ Pumps; Notification	U65875-C01-0720	0
ANALOG	Alm_HiHi - AIT-72194 Aerobic Tank pH High High			8	-	4	Notification	U65875-C01-0720	0
ANALOG	Alm_Hi - AIT-72194 Aerobic Tank pH High			7	-	3	Notification	U65875-C01-0720	0
ANALOG	Alm_Lo - AIT-72194 Aerobic Tank pH Low			6.4	-	3	Notification	U65875-C01-0720	0
ANALOG	Alm_LoLo - AIT-72194 Aerobic Tank pH Low Low			5.8	-	4	Notification	U65875-C01-0720	0
ANALOG	Alm_LoLo - AIT-72193 Aerobic Tank DO Low Low			1	-	4	Notification	U65875-C01-0720	0
ANALOG	Alm_HiHi - DP-79045-1 Pressure Transmitter Train 1 High High			40	kPa	4	Notification; Conduct CIP ASAP	U65875-C01-0740	0
ANALOG	Alm_Hi - DP-79045-1 Pressure Transmitter Train 1 High			30	kPa	3	Notification; Schedule CIP ASAP	U65875-C01-0740	0
ANALOG	Alm_Lo - DP-79045-1 Pressure Transmitter Train 1 Low			3	kPa	3	No Action	U65875-C01-0740	0
ANALOG	Alm_LoLo - DP-79045-1 Pressure Transmitter Train 1 Low Low			1	kPa	3	Notification	U65875-C01-0740	0
DERIVED	Alm_HiHi - PD_79045_1_TMP_HiHi_Alm			40	kPa	4	Stop permeation; show an Alarm	U65875-C01-0740	0
DERIVED	Alm_Hi - PD_79045_1_TMP_Hi_Alm			30	kPa	4	Notification	U65875-C01-0740	0
DERIVED	Alm_Lo - PD_79045_1_TMP CLEAN_HiHi_Alm			14	kPa	4	Stop CEB/CIP; show an Alarm	U65875-C01-0740	0
ANALOG	Alm_HiHi - DP-79045-2 Pressure Transmitter Train 2 High High			40	kPa	4	Notification; Conduct CIP ASAP	U65875-C01-0740	0
ANALOG	Alm_Hi - DP-79045-2 Pressure Transmitter Train 2 High			30	kPa	3	Notification to Schedule CIP ASAP	U65875-C01-0740	0
ANALOG	Alm_Lo - DP-79045-2 Pressure Transmitter Train 2 Low			3	kPa	3	No Action	U65875-C01-0740	0
ANALOG	Alm_LoLo - DP-79045-2 Pressure Transmitter Train 2 Low Low			1	kPa	4	Notification	U65875-C01-0740	0
DERIVED	Alm_HiHi - PD_79045_2_TMP_HiHi_Alm			40	kPa	4	Stop permeation; show an Alarm	U65875-C01-0740	0
DERIVED	Alm_Hi - PD_79045_2_TMP_Hi_Alm			30	kPa	4	Notification	U65875-C01-0740	0
DERIVED	Alm_Lo - PD_79045_2_TMP CLEAN_HiHi_Alm			14	kPa	4	Stop CEB/CIP; show an Alarm	U65875-C01-0740	0
ANALOG	Alm_HiHi - LT-74060-1 Membrane Tank T-74000-1 Level Transmitter Train 1 High High			2.2	m	4	Stop Feed to Train (Close FV-74050-1) until Tank level reaches "Lo" Set-Point	U65875-C01-0740	0
ANALOG	Alm_Hi - LT-74060-1 Membrane Tank T-74000-1 Level Transmitter Train 1 High			2	m	3	Notification	U65875-C01-0740	0

TYPE	DESCRIPTION (HMI MESSAGE)	When Active	Deadband	SETPOINT	UNITS	Severity	PLC ACTION	P&ID #	Rev
ANALOG	Alm_Lo - LT-74060-1 Membrane Tank T-74000-1 Level Transmitter Train 1 Low			1.8	m	3	System goes into STANDBY	U65875-C01-0740	0
ANALOG	Alm_LoLo - LT-74060-1 Membrane Tank T-74000-1 Level Transmitter Train 1 Low Low			1.7	m	4	Train in STANDBY until Membrane Tank 1 Level reaches Set-Point. STOP RAS Pump	U65875-C01-0740	0
ANALOG	Alm_HiHi - LT-74060-2 Membrane Tank T-74000-2 Level Transmitter Train 2 High High			2.2	m	4	Stop Feed to Train (Close FV-74050-2) until Tank level reaches "Lo" Set-Point	U65875-C01-0740	0
ANALOG	Alm_Hi - LT-74060-2 Membrane Tank T-74000-2 Level Transmitter Train 2 High			2	m	3	Notification	U65875-C01-0740	0
ANALOG	Alm_Lo - LT-74060-2 Membrane Tank T-74000-2 Level Transmitter Train 2 Low			1.8	m	3	System goes into STANDBY	U65875-C01-0740	0
ANALOG	Alm_LoLo - LT-74060-2 Membrane Tank T-74000-2 Level Transmitter Train 2 Low Low			1.7	m	4	Train in STANDBY until Membrane Tank 1 Level reaches Set-Point. STOP RAS Pump	U65875-C01-0740	0
ANALOG	Alm_Lo - FT-79074-1 Permeate Flow Indicating Transmitter Train 1 Low			1	m^3/h	3	Notification	U65875-C01-0740	0
ANALOG	Alm_Lo - FT-79074-2 Permeate Flow Indicating Transmitter Train 2 Low			1	m^3/h	3	Notification	U65875-C01-0740	0
ANALOG	Alm_Lo - FT-74674-1 RAS/WAS Flow Indicating Transmitter Train 1 Low			9	m^3/h	3	Notification	U65875-C01-0740	0
ANALOG	Alm_Lo - FT-74674-2 RAS/WAS Flow Indicating Transmitter Train 2 Low			9	m^3/h	3	Notification	U65875-C01-0740	0
DIGITAL	Alm_YA - P-79000A Permeate Pump P-79000-1 Fault Feedback Alarm				-	4	Stop permeation; show an Alarm	U65875-C01-0740	0
DIGITAL	Alm_YA - P-79000B Permeate Pump P-79000-2 Fault Feedback Alarm				-	4	Stop permeation; show an Alarm	U65875-C01-0740	0
DIGITAL	Alm_YI - P-79000A Fail To Start Alarm				-	4	Stop permeation; show an Alarm	U65875-C01-0740	0
DIGITAL	Alm_YI - P-79000A Fail To Stop Alarm				-	4	Stop permeation; show an Alarm	U65875-C01-0740	0
DIGITAL	Alm_YI - P-79000B Fail To Start Alarm				-	4	Stop permeation; show an Alarm	U65875-C01-0740	0
DIGITAL	Alm_YI - P-79000B Fail To Stop Alarm				-	4	Stop permeation; show an Alarm	U65875-C01-0740	0
DIGITAL	Alm_YA - P-79000-1 RAS/WAS Pump P-74600-1 Fault Feedback Alarm				-	4	Stop permeation; show an Alarm	U65875-C01-0740	0
DIGITAL	Alm_YA - P-79000-2 RAS/WAS Pump P-74600-2 Fault Feedback Alarm				-	4	Stop permeation; show an Alarm	U65875-C01-0740	0
DIGITAL	Alm_YI - P-74600A Fail To Start Alarm				-	4	Train in stanby	U65875-C01-0740	0
DIGITAL	Alm_YI - P-74600A Fail To Stop Alarm				-	4	Train in stanby	U65875-C01-0740	0
DIGITAL	Alm_YI - P-74600B Fail To Start Alarm				-	4	Train in stanby	U65875-C01-0740	0
DIGITAL	Alm_YI - P-74600B Fail To Stop Alarm				-	4	Train in stanby	U65875-C01-0740	0
DIGITAL	Alm_XIW-91000-1 UV Intensity Lo			8.8	mW/cm2	4	Notification	U65875-C01-0740	0
DIGITAL	Alm_XIW-91000-1 UV Fault Feedback Alarm					4	Notification	U65875-C01-0740	0
DIGITAL	Alm_XIW-91000-2 UV Intensity Lo			8.8	mW/cm2	4	Notification	U65875-C01-0740	0
DIGITAL	Alm_XIW-91000-2 UV Fault Feedback Alarm					4	Notification	U65875-C01-0740	0
ANALOG	Alm_LoLo - FT-75074 Air to Equalization Tank Flow Indicator Transmitter Low Low			120	m^3/h	3	Notification	U65875-C01-0750(1/2)	0
ANALOG	Alm_LoLo - FT-75274 Air to Aerobic Tank Flow Indicating Transmitter Low Low			50	m^3/h	4	Notification	U65875-C01-0750(1/2)	0
DIGITAL	Alm_YA - B-75000 Equalization Blower B-75000 Fault Feedback Alarm				-	4	Notification	U65875-C01-0750(1/2)	0
DIGITAL	Alm_YI - B-75000 Fail To Start Alarm				-	4	Notification	U65875-C01-0750(1/2)	0
DIGITAL	Alm_YI - B-75000 Fail To Stop Alarm				-	4	Notification	U65875-C01-0750(1/2)	0
DIGITAL	Alm_YA- B-75240A Process Blower B-75240A Fault Feedback Alarm				-	4	Turn blower Off; Turn Standby Blower ON	U65875-C01-0750(1/2)	0
DIGITAL	Alm_YI - B-75240A Fail To Start Alarm				-	4	Turn blower Off; Turn Standby Blower ON	U65875-C01-0750(1/2)	0
DIGITAL	Alm_YI - B-75240A Fail To Stop Alarm				-	4	Turn blower Off; Turn Standby Blower ON	U65875-C01-0750(1/2)	0
DIGITAL	Alm_YA- B-75240B Process Blower B-75240B Fault Feedback Alarm				-	4	Turn blower Off; Turn Standby Blower ON	U65875-C01-0750(1/2)	0
DIGITAL	Alm_YI - B-75240B Fail To Start Alarm				-	4	Turn blower Off; Turn Standby Blower ON	U65875-C01-0750(1/2)	0
DIGITAL	Alm_YI - B-75240B Fail To Stop Alarm				-	4	Turn blower Off; Turn Standby Blower ON	U65875-C01-0750(1/2)	0
ANALOG	Alm_LoLo - FT-75474A Air to Membrane Train 1 Flow Indicating Transmitter Low Low			150	m^3/h	4	Train 1 in Standby; Notification	U65875-C01-0750(2/2)	0
ANALOG	Alm_LoLo - FT-75474B Air to Membrane Train 2 Flow Indicating Transmitter Low Low			150	m^3/h	4	Train 2 in Standby; Notification	U65875-C01-0750(2/2)	0
ANALOG	Alm_LoLo - FT-75874 Sludge Aeration Air Flow Indicating Transmitter Low Low			25	m^3/h	4	Notification	U65875-C01-0750(2/2)	0
DIGITAL	Alm_YA - B-75400A Membrane Blower B-75400A Fault Feedback Alarm				-	4	Train in standby turn blower Off	U65875-C01-0750(2/2)	0
DIGITAL	Alm_YI - B-75400A Fail To Start Alarm				-	4	Train in standby turn blower Off	U65875-C01-0750(2/2)	0
DIGITAL	Alm_YI - B-75400A Fail To Stop Alarm				-	4	Train in standby turn blower Off	U65875-C01-0750(2/2)	0
DIGITAL	Alm_YA - B-75400B Membrane Blower B-75400B Fault Feedback Alarm				-	4	Train in standby turn blower Off	U65875-C01-0750(2/2)	0
DIGITAL	Alm_YI - B-75400B Fail To Start Alarm				-	4	Train in standby turn blower Off	U65875-C01-0750(2/2)	0
DIGITAL	Alm_YI - B-75400B Fail To Stop Alarm				-	4	Train in standby turn blower Off	U65875-C01-0750(2/2)	0
DIGITAL	Alm_YA - B-75800 Sludge Blower B-75800 Fault Feedback Alarm				-	4	Notification	U65875-C01-0750(2/2)	0
DIGITAL	Alm_YI - B-75800 Fail To Start Alarm				-	4	Notification; Turn Blower Off	U65875-C01-0750(2/2)	0
DIGITAL	Alm_YI - B-75800 Fail To Stop Alarm				-	4	Notification; Turn Blower Off	U65875-C01-0750(2/2)	0
ANALOG	Alm_HiHi - LT-79060 Permeate Tank Level Transmitter High High			1.5	m	4	Critical Alarm; Both Trains in Standby	U65875-C01-0790	0
ANALOG	Alm_Hi - LT-79060 Permeate Tank Level Transmitter High			1.2	m	3	Notification	U65875-C01-0790	0
ANALOG	Alm_Lo - LT-79060 Permeate Tank Level Transmitter Low				m	3	Notification	U65875-C01-0790	0
ANALOG	Alm_LoLo - LT-79060 Permeate Tank Level Transmitter Low Low			0.8	m	4	Notification; Disable CEB until Level reaches Low Level	U65875-C01-0790	0
DIGITAL	Alm_YA - P-79600A Effluent Pump P-79600A Fault Feedback Alarm				-	4	Use Standby Pump	U65875-C01-0790	0
DIGITAL	Alm_YI - P-79600A Fail To Start Alarm				-	4	Use Standby Pump	U65875-C01-0790	0
DIGITAL	Alm_YI - P-79600A Fail To Stop Alarm				-	4	Use Standby Pump	U65875-C01-0790	0
DIGITAL	Alm_YA - P-79600B Effluent Pump P-79600B Fault Feedback Alarm				-	4	Use Standby Pump	U65875-C01-0790	0
DIGITAL	Alm_YI - P-79600B Fail To Start Alarm				-	4	Use Standby Pump	U65875-C01-0790	0
DIGITAL	Alm_YI - P-79600B Fail To Stop Alarm				-	4	Use Standby Pump	U65875-C01-0790	0
ANALOG	Alm_Hi - AIT-79189 Permeate Turbidity High			2	NTU	4	Notification	U65875-C01-0790	0
DIGITAL	Alm_YA - P-83700 Citric Acid Pump P-83700 Fault Feedback Alarm				-	4	Notification	U65875-C01-0800(1/2)	0
DIGITAL	Alm_YA - P-83500 Sodium Hypochlorite P-83500 Fault Feedback Alarm				-	4	Notification	U65875-C01-0800(1/2)	0
DIGITAL	Alm_YA - P-80500A Alkalinity Pump P-80500A Fault Feedback Alarm				-	4	Notification; Use Standby Pump	U65875-C01-0800(2/2)	0
DIGITAL	Alm_YA - P-80500B Alkalinity Pump P-80500B Fault Feedback Alarm				-	4	Notification; Use Standby Pump	U65875-C01-0800(2/2)	0
ANALOG	Alm_HiHi - LT-96060 Sludge Holding Tank T-96000 Level Transmitter High High			2.2	m	4	Notification; stop sludge wasting	U65875-C01-0960	0
ANALOG	Alm_Hi - LT-96060 Sludge Holding Tank T-96000 Level Transmitter High			2	m	3	Notification to schedule sludge truck out	U65875-C01-0960	0
DIGITAL	Alm_YI - P-12300 Fail To Start Alarm				-	4	Stop pump; Notification	20C1131-C01-0110	1

TYPE	DESCRIPTION (HMI MESSAGE)	When Active	Deadband	SETPOINT	UNITS	Severity	PLC ACTION	P&ID #	Rev
DIGITAL	Alm_YI - P-12300 Fail To Stop Alarm				-	4	Stop pump; Notification	20C1131-C01-0110	1
DIGITAL	Alm_YA - P-12300 Sump Pump P-12300 Fault Alarm				-	4	Stop pump; Notification	20C1131-C01-0110	1
ANALOG	Alm_Lo - FT-12300 Sump Pump Flow Indicating Transmitter Train 3 Low Low			1	m^3/h	3	Notification	20C1131-C01-0110	1
ANALOG	Alm_HiHi - LT-72160 Aerobic Tank T-72100 Level Transmitter High High			5.4	m	3	Stop Sump Pump P-12300; Notification	20C1131-C01-0720	1
ANALOG	Alm_Hi - LT-72160 Aerobic Tank T-72100 Level Transmitter High			5.3	m	3	Notification	20C1131-C01-0720	1
ANALOG	Alm_Lo - LT-72160 Aerobic Tank T-72100 Level Transmitter Low			5	m	3	Notification	20C1131-C01-0720	1
ANALOG	Alm_LoLo - LT-72160 Aerobic Tank T-72100 Level Transmitter Low Low			4.8	m	4	Stop Sump Pump P-12300; Notification	20C1131-C01-0720	1
ANALOG	Alm_HiHi - AIT-72194 Aerobic Tank pH High High			8	-	4	Notification	20C1131-C01-0720	1
ANALOG	Alm_Hi - AIT-72194 Aerobic Tank pH High			7	-	3	Notification	20C1131-C01-0720	1
ANALOG	Alm_Lo - AIT-72194 Aerobic Tank pH Low			6.4	-	3	Notification	20C1131-C01-0720	1
ANALOG	Alm_LoLo - AIT-72194 Aerobic Tank pH Low Low			5.8	-	4	Notification	20C1131-C01-0720	1
ANALOG	Alm_LoLo - AIT-72193 Aerobic Tank DO Low Low			1	mg/L	4	Notification	20C1131-C01-0720	1
ANALOG	Alm_HiHi - PT-79045-3 Pressure Transmitter Train 1 High High			40	kPa	4	Notification; Conduct CIP ASAP	20C1131-C01-0740	1
ANALOG	Alm_Hi - PT-79045-3 Pressure Transmitter Train 1 High			30	kPa	3	Notification to Schedule CIP ASAP	20C1131-C01-0740	1
ANALOG	Alm_Lo - PT-79045-3 Pressure Transmitter Train 1 Low			3	kPa	3	No Action	20C1131-C01-0740	1
ANALOG	Alm_LoLo - PT-79045-3 Pressure Transmitter Train 1 Low Low			1	kPa	3	Notification	20C1131-C01-0740	1
DERIVED	Alm_HiHi - PD_79045_3_TMP_HiHi_Alm			40	kPa	4	Stop permeation; show an Alarm	20C1131-C01-0740	1
DERIVED	Alm_Hi - PD_79045_3_TMP_Hi_Alm			30	kPa	4	Notification	20C1131-C01-0740	1
DERIVED	Alm_Lo - PD_79045_3_TMP CLEAN_HiHi_Alm			14	kPa	4	Stop CEB/CIP; show an Alarm	20C1131-C01-0740	1
ANALOG	Alm_HiHi - LT-74060-3 Membrane Tank T-74000-3 Level Transmitter Train 3 High High			2.2	m	4	Stop Feed to Train (Close FV-74050-3) until Tank level reaches "Lo" Set-Point	20C1131-C01-0740	1
ANALOG	Alm_Hi - LT-74060-3 Membrane Tank T-74000-3 Level Transmitter Train 3 High			2	m	3	Notification	20C1131-C01-0740	1
ANALOG	Alm_Lo - LT-74060-3 Membrane Tank T-74000-3 Level Transmitter Train 3 Low			1.8	m	3	Train goes into STANDBY	20C1131-C01-0740	1
ANALOG	Alm_LoLo - LT-74060-3 Membrane Tank T-74000-3 Level Transmitter Train 3 Low Low			1.7	m	4	Train in STANDBY until Membrane Tank 3 Level reaches Set-Point. STOP RAS Pump	20C1131-C01-0740	1
ANALOG	Alm_Lo - FT-79074-3 Permeate Flow Indicating Transmitter Train 3 Low			1	m^3/h	3	Notification	20C1131-C01-0740	1
ANALOG	Alm_Lo - FT-74674-3 RAS/WAS Flow Indicating Transmitter Train 3 Low			9	m^3/h	3	Notification	20C1131-C01-0740	1
DIGITAL	Alm_YA - P-79000-3 Permeate Pump Fault Feedback Alarm				-	4	Stop permeation; show an Alarm	20C1131-C01-0740	1
DIGITAL	Alm_YI - P-79000-3 Fail To Start Alarm				-	4	Stop permeation; show an Alarm	20C1131-C01-0740	1
DIGITAL	Alm_YI - P-79000-3 Fail To Stop Alarm				-	4	Stop permeation; show an Alarm	20C1131-C01-0740	1
DIGITAL	Alm_YA - P-74600-3 RAS/WAS Pump Fault Feedback Alarm				-	4	Stop permeation; show an Alarm	20C1131-C01-0740	1
DIGITAL	Alm_YI - P-74600-3 Fail To Start Alarm				-	4	Train goes into STANDBY; Notification	20C1131-C01-0740	1
DIGITAL	Alm_YI - P-74600-3 Fail To Stop Alarm				-	4	Train goes into STANDBY; Notification	20C1131-C01-0740	1
DIGITAL	Alm_RIO103_LEAK RIO 103 Leak Fault Alm				-	4	Notification	20C1131-C01-0740	1
DIGITAL	Alm_RIO103_SMOKE/CO2 RIO 103 SMOKE/CO2 Fault Alm				-	4	Notification	20C1131-C01-0740	1
DIGITAL	Alm_XIW-91000-3 UV Intensity Lo			8.8	mW/cm2	4	Notification	20C1131-C01-0740	1
DIGITAL	Alm_XIW-91000-3 UV Fault Feedback Alarm				-	4	Notification	20C1131-C01-0740	1
ANALOG	Alm_LoLo - FT-75374 Air to Aerobic Tank Flow Indicating Transmitter Low Low			50	m^3/h	4	Notification	20C1131-C01-0750 (1/2)	1
DIGITAL	Alm_YA- B-75340A Process Blower B-75340A Fault Feedback Alarm				-	4	Turn Blower Off; Turn Standby Blower ON	20C1131-C01-0750 (1/2)	1
DIGITAL	Alm_YI - B-75340A Fail To Start Alarm				-	4	Turn Blower Off; Turn Standby Blower ON	20C1131-C01-0750 (1/2)	1
DIGITAL	Alm_YI - B-75340A Fail To Stop Alarm				-	4	Turn Blower Off; Turn Standby Blower ON	20C1131-C01-0750 (1/2)	1
DIGITAL	Alm_YA- B-75340B Process Blower B-75340B Fault Feedback Alarm				-	4	Turn Blower Off; Turn Standby Blower ON	20C1131-C01-0750 (1/2)	1
DIGITAL	Alm_YI - B-75340B Fail To Start Alarm				-	4	Turn Blower Off; Turn Standby Blower ON	20C1131-C01-0750 (1/2)	1
DIGITAL	Alm_YI - B-75340B Fail To Stop Alarm				-	4	Turn Blower Off; Turn Standby Blower ON	20C1131-C01-0750 (1/2)	1
ANALOG	Alm_LoLo - FT-75574 Air to Membrane Train 3 Flow Indicating Transmitter Low Low			150	m^3/h	4	Train goes into STANDBY; Notification	20C1131-C01-0750 (2/2)	1
DIGITAL	Alm_YA - B-75500 Membrane Blower B-75500 Fault Feedback Alarm				-	4	Train in standby turn blower Off; Notification	20C1131-C01-0750 (2/2)	1
DIGITAL	Alm_YI - B-75500 Fail To Start Alarm				-	4	Train in standby turn blower Off; Notification	20C1131-C01-0750 (2/2)	1
DIGITAL	Alm_YI - B-75500 Fail To Stop Alarm				-	4	Train in standby turn blower Off; Notification	20C1131-C01-0750 (2/2)	1
ANALOG	Alm_HiHi - LT-79160 Permeate Tank Level Transmitter High High			1.5	m	4	Critical Alarm; Train 3 goes into STANDBY	20C1131-C01-0790	1
ANALOG	Alm_Hi - LT-79160 Permeate Tank Level Transmitter High			1.2	m	3	Notification	20C1131-C01-0790	1
ANALOG	Alm_LoLo - LT-79160 Permeate Tank Level Transmitter Low Low			0.8	m	4	Notification; Disable CEB until Level reaches Low Level	20C1131-C01-0790	1
DIGITAL	Alm_YA - P-79700A Effluent Pump P-79700A Fault Feedback Alarm				-	4	Use Standby Pump	20C1131-C01-0790	1
DIGITAL	Alm_YI - P-79700A Fail To Start Alarm				-	4	Use Standby Pump	20C1131-C01-0790	1
DIGITAL	Alm_YI - P-79700A Fail To Stop Alarm				-	4	Use Standby Pump	20C1131-C01-0790	1
DIGITAL	Alm_YA - P-79700B Effluent Pump P-79700B Fault Feedback Alarm				-	4	Use Standby Pump	20C1131-C01-0790	1
DIGITAL	Alm_YI - P-79700B Fail To Start Alarm				-	4	Use Standby Pump	20C1131-C01-0790	1
DIGITAL	Alm_YI - P-79700B Fail To Stop Alarm				-	4	Use Standby Pump	20C1131-C01-0790	1
ANALOG	Alm_Hi - AIT-79193 Permeate Tank pH High			8	-	3	Notification	20C1131-C01-0790	1
ANALOG	Alm_Lo - AIT-79193 Permeate Tank pH Low			6	-	3	Notification	20C1131-C01-0790	1
ANALOG	Alm_Hi - AIT-79189 Permeate Turbidity High			2	NTU	4	Notification	20C1131-C01-0790	1
DIGITAL	Alm_YA - P-80600A Alkalinity Pump P-80600A Fault Feedback Alarm				-	4	Notification; Use Standby Pump	20C1131-C01-0800	1
DIGITAL	Alm_YA - P-80600B Alkalinity Pump P-80600B Fault Feedback Alarm				-	4	Notification; Use Standby Pump	20C1131-C01-0800	1
DIGITAL	Alm_RIO103_Comm_Alm					4	Stop	NA	1
DIGITAL	Alm_RIO103_AU RIO 103 Emergency Stop Fault Alm					4	Stop	NA	1

8.3 - I/O LIST

NOTE:

THE INFORMATION, SPECIFICATIONS AND DATA SHOWN ON THIS PRINT ARE FURNISHED BY AND ARE TO REMAIN THE PROPERTY OF H_2O INNOVATION.

THE PURPOSE OF THIS DOCUMENT IS TO FACILITATE THE INSTALLATION, MAINTENANCE AND OPERATION OF THE EQUIPMENT REPRESENTED BY SAID PRINT. NO OTHER USE OF THIS DOCUMENT SHALL BE MADE WITHOUT EXPRESS WRITTEN CONSENT FROM H_2O INNOVATION.

NO.	DATE	REVISION	P.I.D.	DWN BY	ENGINEER	CHK'D BY
.00	21/04/2020	INITIAL VERSION				

h2o innovation
Innovation to ensure our world's privilege

DWG TITLE
MELIADINE WWTP EXPANSION
CONTAINERIZED SEWAGE
TREATMENT PLANT
ELECTRICAL DRAWINGS

RIO-103
REMOTE I/O PANEL
DIGITAL INPUT

JOB NO: 20C1131

DWG NO: 20C1131-C03-RIO103-DI-01

SHEET NO: 11 OF 25

REVISION: .00

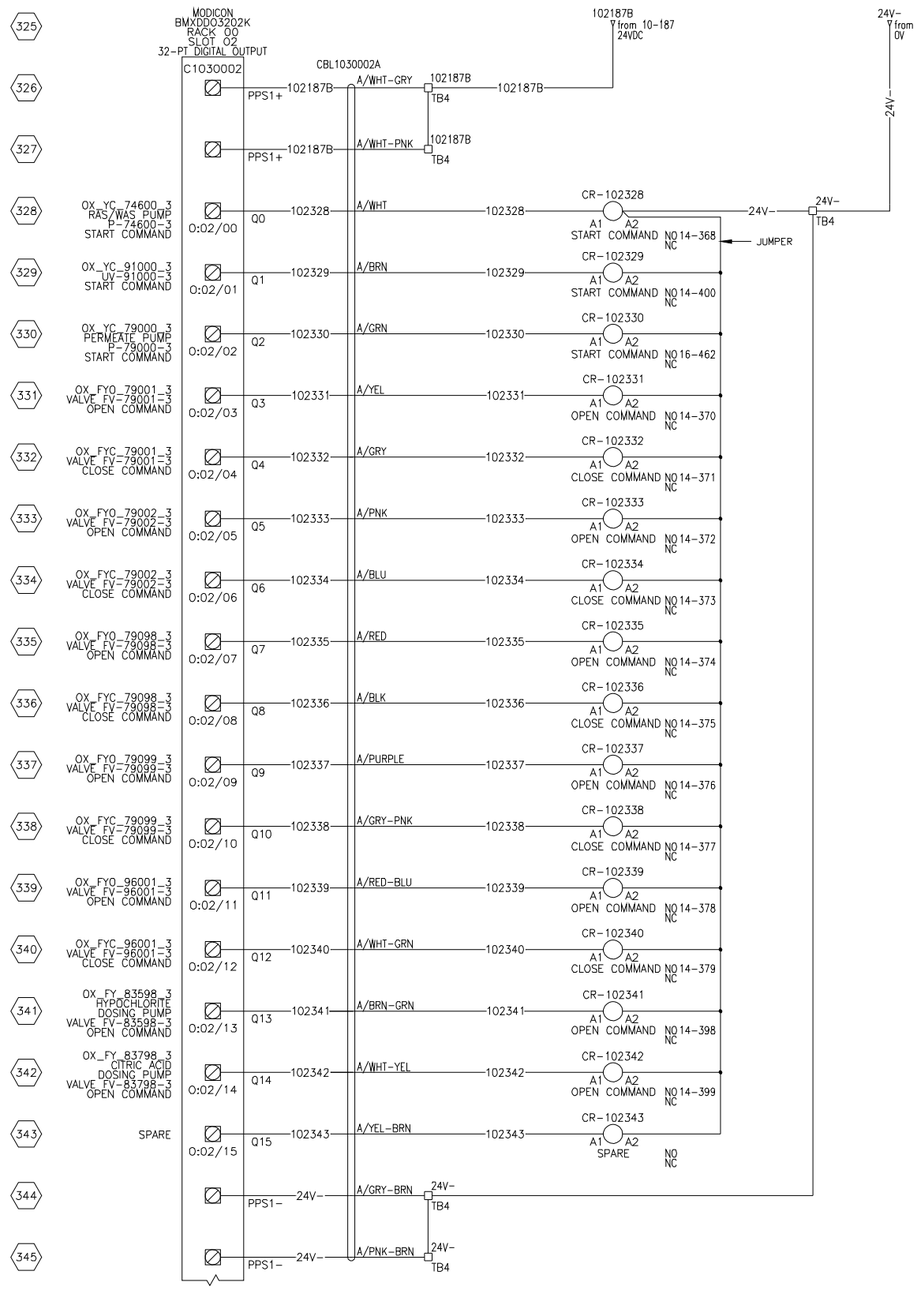

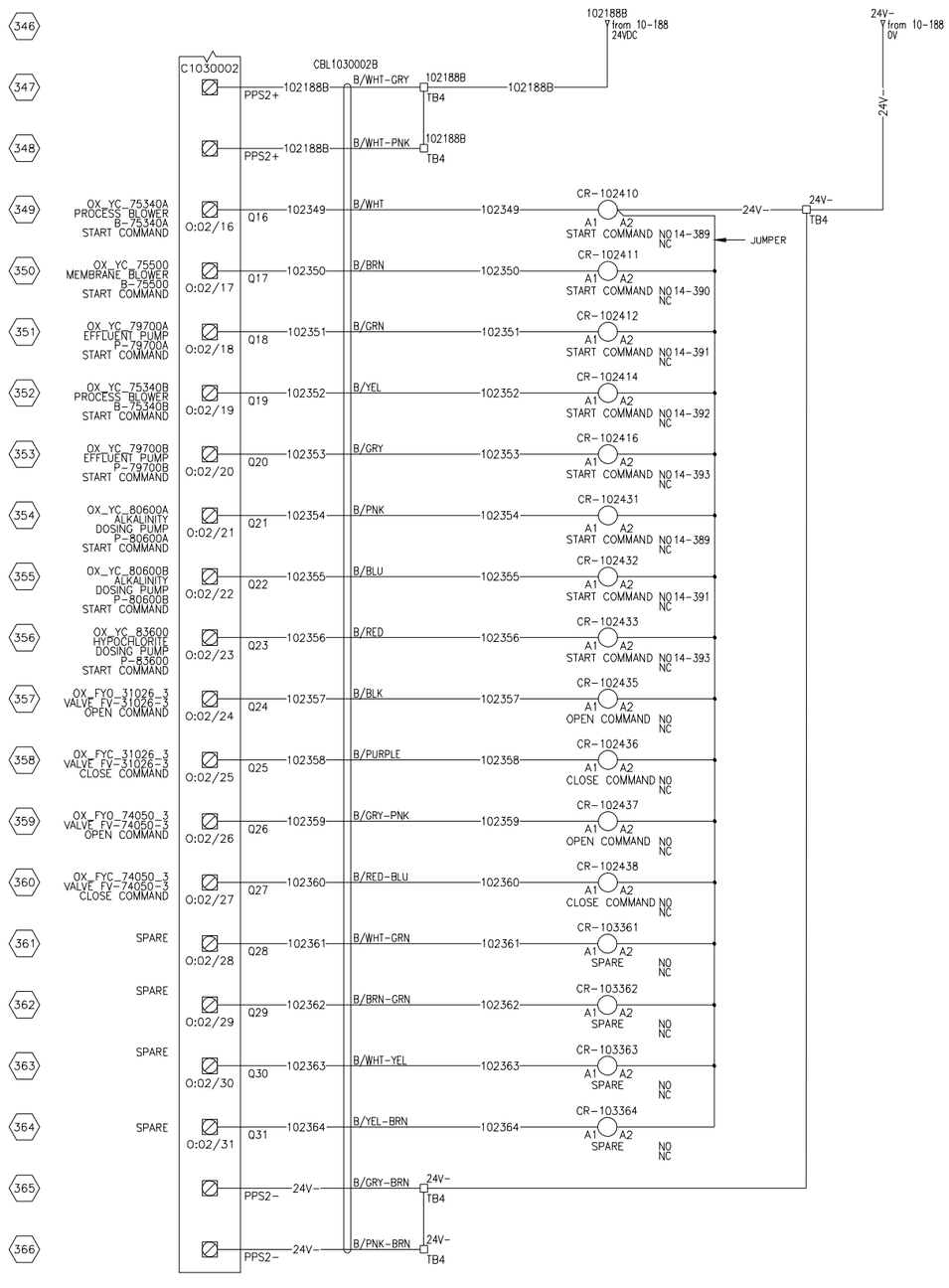

NOTE:

THE INFORMATION, SPECIFICATIONS AND DATA SHOWN ON THIS PRINT ARE FURNISHED BY AND ARE TO REMAIN THE PROPERTY OF H_2O INNOVATION.

THE PURPOSE OF THIS DOCUMENT IS TO FACILITATE THE INSTALLATION, MAINTENANCE AND OPERATION OF THE EQUIPMENT REPRESENTED BY SAID PRINT. NO OTHER USE OF THIS DOCUMENT SHALL BE MADE WITHOUT EXPRESS WRITTEN CONSENT FROM H_2O INNOVATION.

NO.	DATE	REVISION	DWN BY	ENGINEER	CHK'D BY
.00	21/04/2020	INITIAL VERSION	P.L.D.		

h2o innovation
knowledge to answers, water to prosper

DWG TITLE
MELIADINE WWTP EXPANSION
CONTAINERIZED SEWAGE TREATMENT PLANT
ELECTRICAL DRAWINGS

RIO-103
REMOTE I/O PANEL
DIGITAL OUTPUT

JOB NO: 20C1131

DWG NO: 20C1131-C03-RIO103-DO-01

SHEET NO: 13 OF 25

REVISION: .00

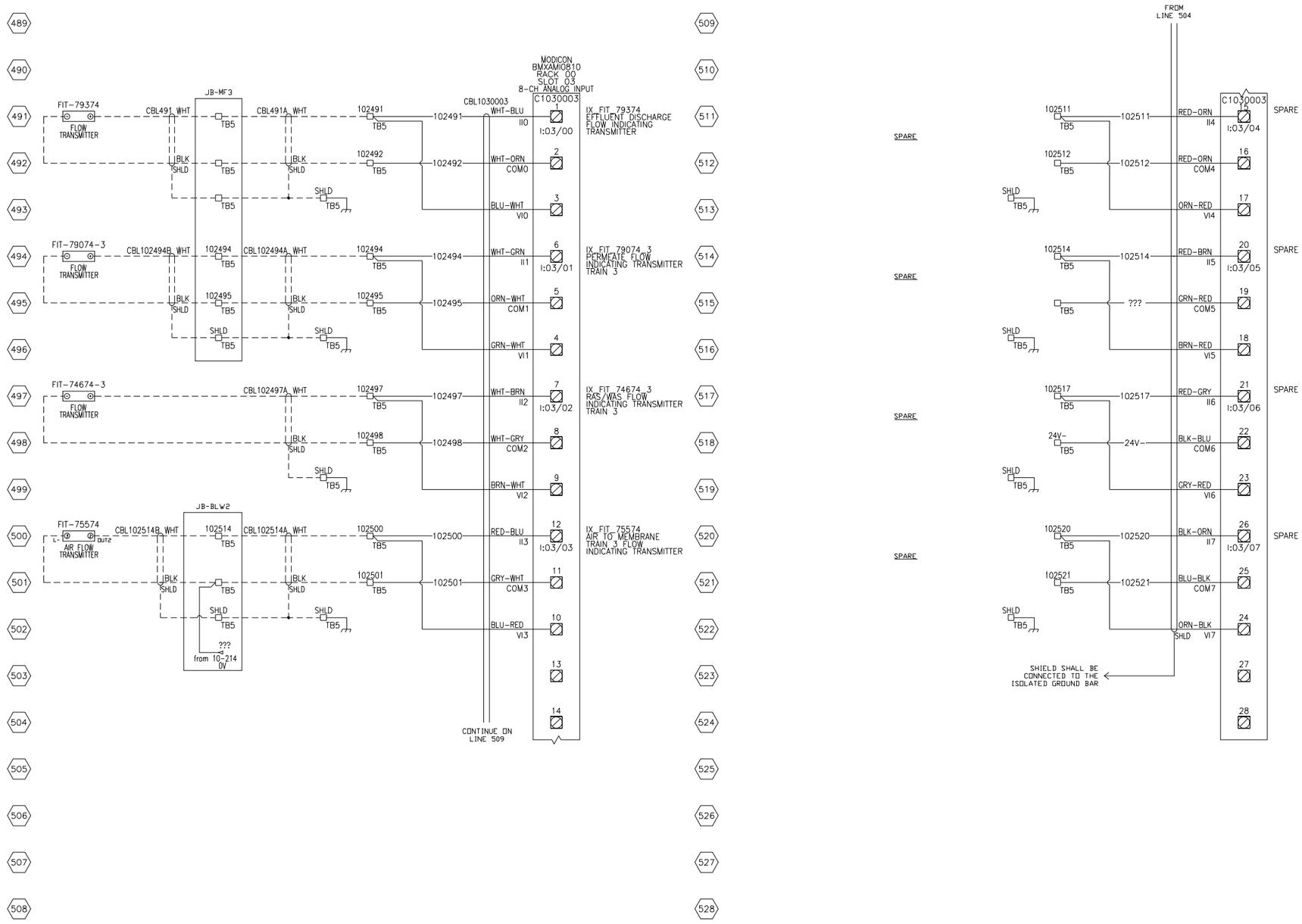

NOTE:

THE INFORMATION, SPECIFICATIONS AND DATA SHOWN ON THIS PRINT ARE FURNISHED BY AND ARE TO REMAIN THE PROPERTY OF H_2O INNOVATION.

THE PURPOSE OF THIS DOCUMENT IS TO FACILITATE THE INSTALLATION, MAINTENANCE AND OPERATION OF THE EQUIPMENT REPRESENTED BY SAID PRINT. NO OTHER USE OF THIS DOCUMENT SHALL BE MADE WITHOUT EXPRESS WRITTEN CONSENT FROM H_2O INNOVATION.

NO.	DATE	REVISION	DWN BY	ENGINEER	CHK'D BY
.00	21/04/2020	INITIAL VERSION	P.L.D.		

DWG TITLE

MELIADINE WWTP EXPANSION
CONTAINERIZED SEWAGE TREATMENT PLANT
ELECTRICAL DRAWINGS

RIO-103
REMOTE I/O PANEL
ANALOG INPUT

JOB NO: 20C1131

DWG NO: 20C1131-C03-RIO103-AI-01

SHEET NO: 17 OF 25

REVISION: .00

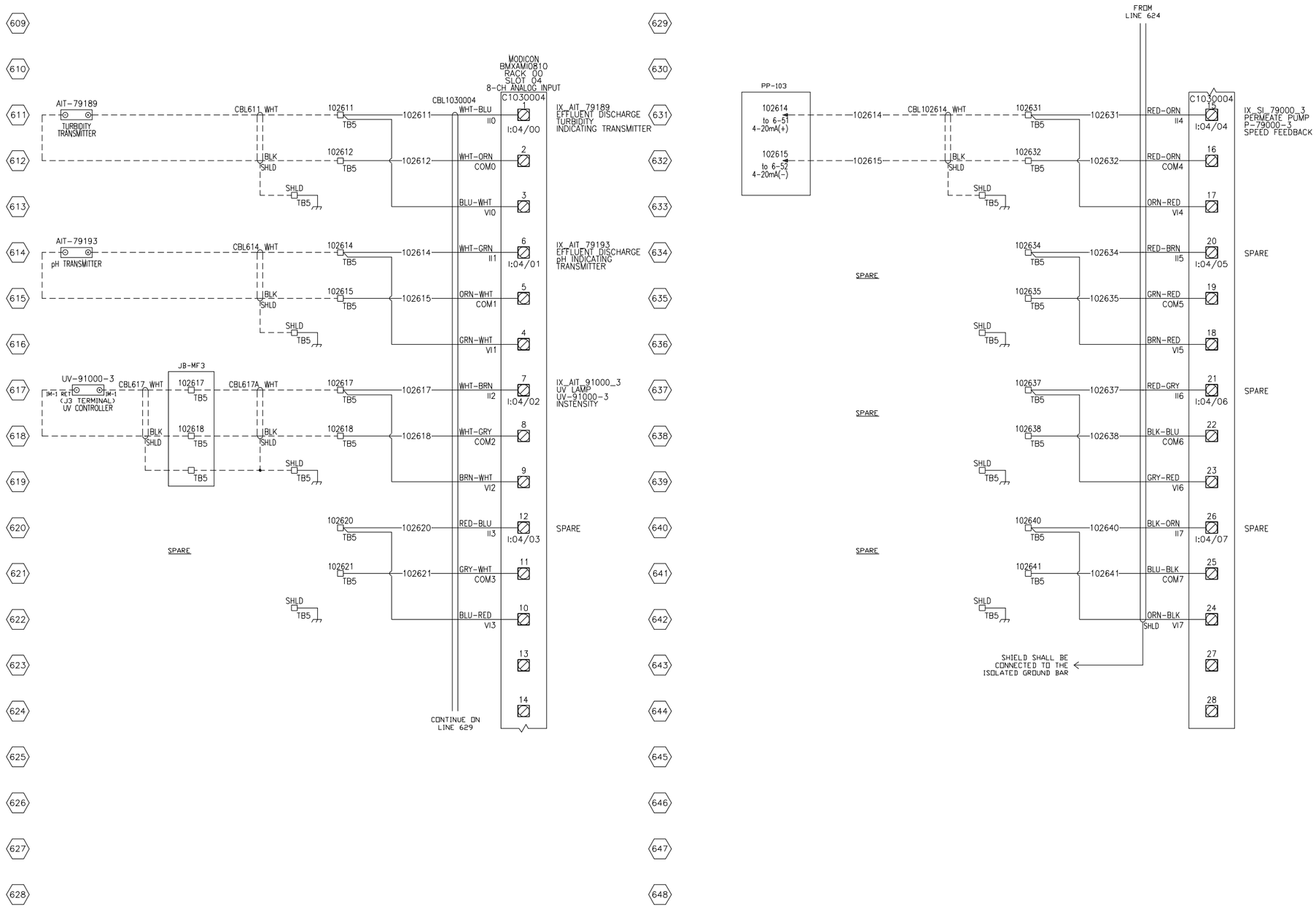

NOTE:

THE INFORMATION, SPECIFICATIONS AND DATA SHOWN ON THIS PRINT ARE FURNISHED BY AND ARE TO REMAIN THE PROPERTY OF H_2O INNOVATION.

THE PURPOSE OF THIS DOCUMENT IS TO FACILITATE THE INSTALLATION, MAINTENANCE AND OPERATION OF THE EQUIPMENT REPRESENTED BY SAID PRINT. NO OTHER USE OF THIS DOCUMENT SHALL BE MADE WITHOUT EXPRESS WRITTEN CONSENT FROM H_2O INNOVATION.

NO.	DATE	REVISION	DWN BY	ENGINEER	CHK'D BY
.00	21/04/2020	INITIAL VERSION	P.L.D.		

h2o innovation
knowledge to share.du savoir-à partager

DWG TITLE
MELIADINE WWTP EXPANSION
CONTAINERIZED SEWAGE
TREATMENT PLANT
ELECTRICAL DRAWINGS

RIO-103
REMOTE I/O PANEL
ANALOG INPUT

JOB NO
20C1131

DWG NO
20C1131-C03-RIO103-AI-04

SHEET NO
20 OF 25

REVISION
.00

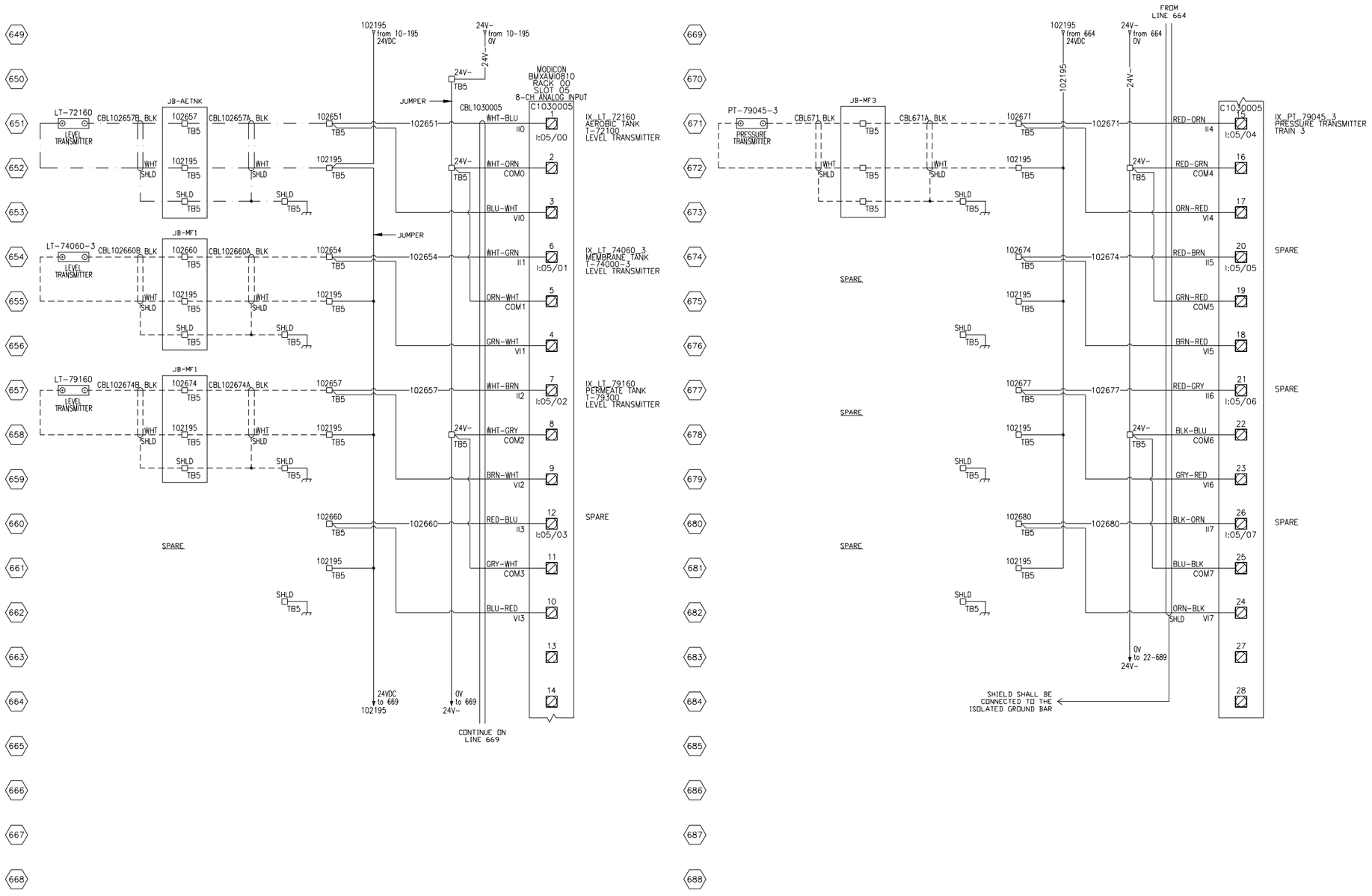

NOTE:

THE INFORMATION, SPECIFICATIONS AND DATA SHOWN ON THIS PRINT ARE FURNISHED BY AND ARE TO REMAIN THE PROPERTY OF H_2O INNOVATION.

THE PURPOSE OF THIS DOCUMENT IS TO FACILITATE THE INSTALLATION, MAINTENANCE AND OPERATION OF THE EQUIPMENT REPRESENTED BY SAID PRINT. NO OTHER USE OF THIS DOCUMENT SHALL BE MADE WITHOUT EXPRESS WRITTEN CONSENT FROM H_2O INNOVATION.

NO.	DATE	REVISION	DWN BY	ENGINEER	CHK'D BY
.00	21/04/2020	INITIAL VERSION	P.L.D.		

DWG TITLE

MELIADINE WWTP EXPANSION
CONTAINERIZED SEWAGE
TREATMENT PLANT
ELECTRICAL DRAWINGS

RIO-103
REMOTE I/O PANEL
ANALOG INPUT

JOB NO
20C1131

DWG NO
20C1131-C03-RIO103-AI-05

SHEET NO
21 OF 25

REVISION
.00

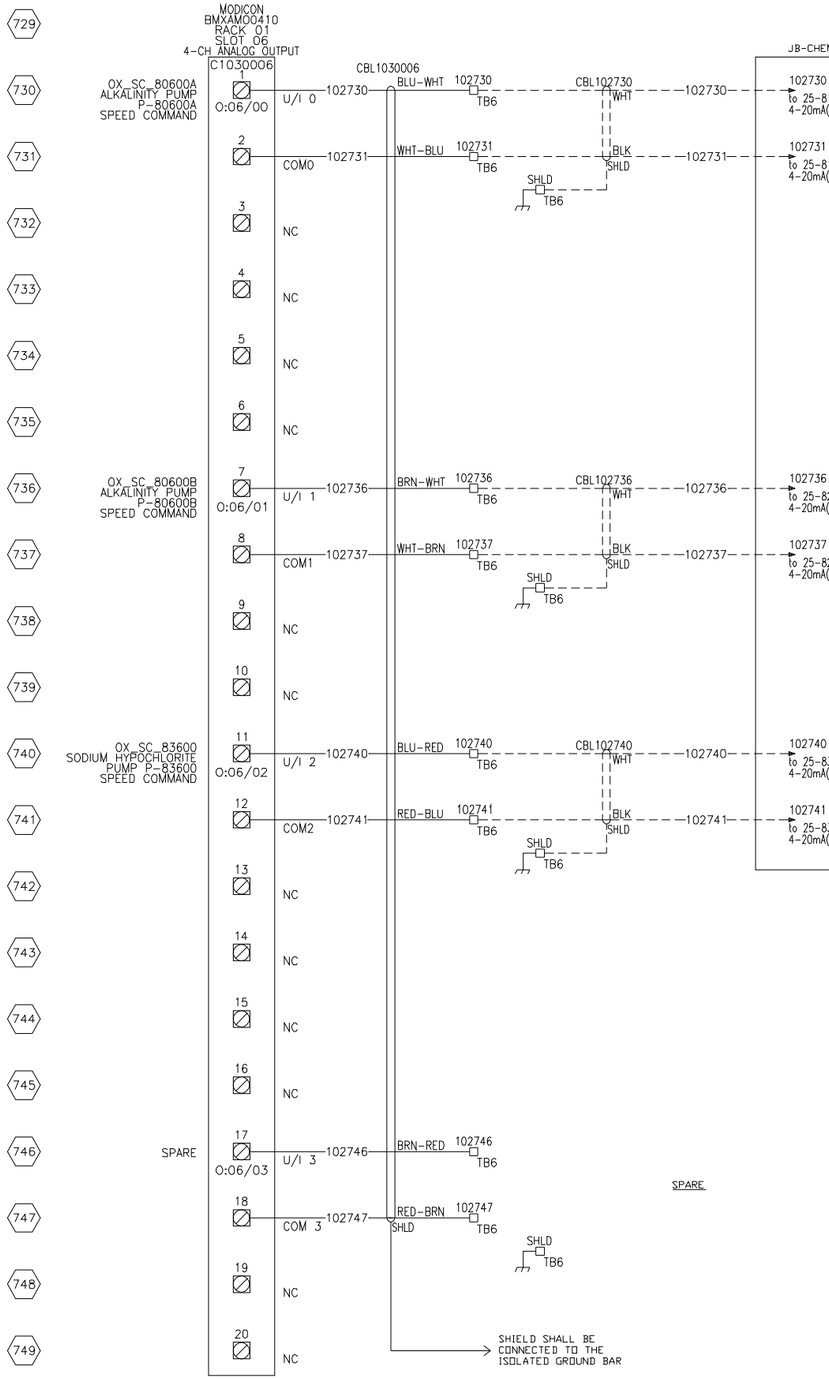

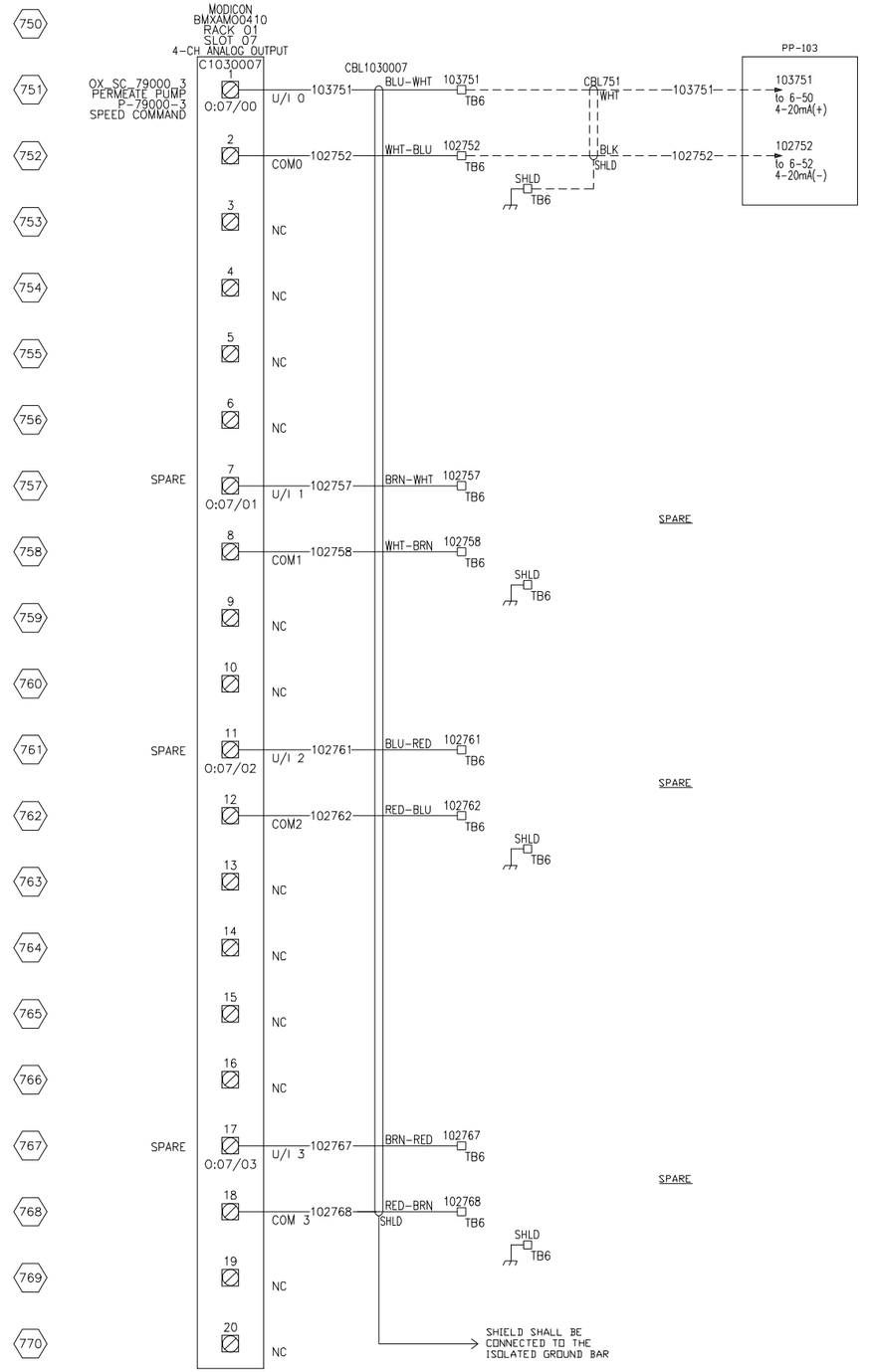

NOTE:

THE INFORMATION, SPECIFICATIONS AND DATA SHOWN ON THIS PRINT ARE FURNISHED BY AND ARE TO REMAIN THE PROPERTY OF H_2O INNOVATION.

THE PURPOSE OF THIS DOCUMENT IS TO FACILITATE THE INSTALLATION, MAINTENANCE AND OPERATION OF THE EQUIPMENT REPRESENTED BY SAID PRINT. NO OTHER USE OF THIS DOCUMENT SHALL BE MADE WITHOUT EXPRESS WRITTEN CONSENT FROM H_2O INNOVATION.

NO.	DATE	REVISION	DWN BY	P.L.D.	ENGINEER	CHK'D BY
.00	21/04/2020	INITIAL VERSION				

DWG TITLE

MELIADINE WWTP EXPANSION
CONTAINERIZED SEWAGE
TREATMENT PLANT
ELECTRICAL DRAWINGS

RIO-103
REMOTE I/O PANEL
ANALOG OUTPUT

JOB NO: 20C1131

DWG NO: 20C1131-C03-RIO103-AO-01

SHEET NO: 23 OF 25

REVISION: .00

SECTION 9 - DRAWINGS AND DIAGRAMS

9.1 - PIPING AND INSTRUMENTATION DIAGRAMS (P&IDS)

VALVE SYMBOLS

N.OPEN N.CLOSED

- BALL
- V-BALL
- BUTTERFLY
- DIAPHRAGM
- GATE
- GLOBE
- NEEDLE
- PLUG
- SAMPLE/DRAIN
- CHECK
- BACKFLOW PREVENTER
- 3-WAY, 4-WAY
- PRESSURE REGULATING
- BACK PRESSURE REGULATING
- FLOW CONTROL
- 2-WAY SOLENOID
- 3-WAY SOLENOID
- 4-WAY SOLENOID
- AIR RELEASE
- VACUUM BREAKER
- PRESSURE RELEASE
- SLUICE GATE/WEIR

VALVE ACTUATOR SYMBOLS

- PNEUMATIC (FAIL LAST POSITION)
- PNEUMATIC FAIL CLOSE
- PNEUMATIC FAIL OPEN
- ELECTRIC
- DIAPHRAGM
- POSITIONER (ANY ACTUATOR TYPE)
- HAND OVERRIDE (ANY ACTUATOR TYPE)
- TRAVEL STOPS (ANY ACTUATOR TYPE)

FLOWMETER SYMBOLS

INTEGRAL — CLOSE COUPLED — REMOTE

- MAGNETIC
- PADDLE
- VORTEX
- DP/ORIFICE
- THERMAL
- ROTAMETER

INSTRUMENTATION SYMBOLS

LOCALLY MOUNTED	IN CONTROL PANEL	DESCRIPTION
X nnnnn	X nnnnn	DISCRETE INSTRUMENT
	X nnnnn	PRIMARY PLC OR DCS SHARED CONTROL
	X nnnnn	SECONDARY PLC OR DCS SHARED CONTROL
	X nnnnn	COMPUTER FUNCTION

INSTRUMENT FUNCTIONS

- K — SIGNAL PROCESSING FUNCTION
- A/M — AUTO/MANUAL
- Σ — ADDITION/SUMMATION
- Δ — DIFFERENTIAL
- I — INTERLOCK LOGIC FUNCTION
- Σ/n — AVERAGING

INSTRUMENT CONNECTIONS

- THREADED
- SOCKETWELD
- WELDED

PIPING SYMBOLS

- FLANGED CONNECTION
- THREADED CONNECTION
- BLIND FLANGE
- DOUBLE CONTAINMENT
- QUICK DISCONNECT VICTAULIC
- x" INSULATION THICKNESS INSULATION
- QUICK DISCONNECT CAMLOK
- x" INSULATION THICKNESS E HEAT TRACING E=ELECTRIC S=STEAM G=GLYCOL
- CAPPED PIPE END
- DRAIN OUTLET
- UNION
- REDUCER ECCENTRIC REDUCER
- EXPANSION/FLEXIBLE/ ISOLATION JOINT

PIPING ABBREVIATIONS

316 SS	316 STAINLESS STEEL
304 SS	304 STAINLESS STEEL
316L SS	LOW CARBON 316 STAINLESS STEEL
304L SS	LOW CARBON 304 STAINLESS STEEL
CPVC	CHLORINATED POLYVINYL CHLORIDE
CS	CARBON STEEL
DI	DUCTILE IRON
HDPE	HIGH-DENSITY POLYETHYLENE
PE	POLYETHYLENE
PVC	POLYVINYL CHLORIDE
RLCS	RUBBER LINED CARBON STEEL
SCH.	SCHEDULE
SDR	STANDARD DIMENSION RATIO
CML	CEMENT MORTAR LINED

LINE SYMBOLOGY

- MAIN PROCESS LINE
- SECONDARY PROCESS LINE
- PROCESS LINE, BY OTHERS
- COMM LINK (EX. PLC TO HMI)
- COMM LINK (EX. PLC TO DCS)
- ELECTRIC WIRING
- PNEUMATIC LINE
- LINE JUMPER
- PIPE DISCONTINUATION
- FLOW DIRECTION ARROWS
- 4" 316 SS SCH.10 — LINES SIZE/ MATERIAL IDENTIFIER
- SKID BOUNDARY — SKID BY H_2O Innovation — BY OTHERS
- REVISION
- LINES TO/FROM OTHER SHEETS — DESCRIPTION — C01-0001 SHT 1 — DESTINATION

PUMP SYMBOLS

- CENTRIFUGAL
- CHEMICAL METERING
- DIAPHRAGM
- POSITIVE DISPLACEMENT
- VACUUM
- SUBMERSIBLE OR FLOATING
- VERTICAL TURBINE
- PERISTALTIC/HOSE

MISCELLANEOUS EQUIPMENT SYMBOLS

- CARTRIDGE FILTER HOUSING
- AUTOMATIC STRAINER
- SILENCER
- MIXER
- STATIC MIXER
- RESIN TRAP
- MOTOR
- EDUCTOR OR VENTURI
- Y STRAINER
- CONICAL OR TEMPORARY STRAINER
- PULSATION DAMPENER
- DIAPHRAGM
- FLOW ORIFICE
- AIR COMPRESSOR
- RUPTURE DISK (PRESSURE)
- RUPTURE DISK (VACUUM)
- SPECTACLE BLIND (NORMALLY OPEN, NORMALLY CLOSED)
- INJECTION QUILL
- FILTER
- REFRIGERATED AIR DRYER
- TANK
- MMF TANK
- IMMERSED HEATER
- IN-LINE HEATER
- ULTRASONIC LEVEL TRANSMITTER
- FLOAT-STYLE LEVEL TRANSMITTER
- CHEMICAL CONTAINMENT
- CALIBRATION COLUMN
- MEMBRANE
- UV STERILIZER
- DIFFUSERS:
- COARSE BUBBLE
- FINE BUBBLE
- POSITIVE DISPLACEMENT BLOWER
- REGENERATIVE BLOWER
- CENTRIFUGAL BLOWER
- TURBOCHARGER
- BIO-WHEEL
- MANWAY

FLOW INSTRUMENTS

FAH	FLOW ALARM HIGH
FAL	FLOW ALARM LOW
FCV	FLOW CONTROL VALVE
FE	FLOW ELEMENT
FI	FLOW INDICATOR
FIC	FLOW INDICATING CONTROLLER
FIT	FLOW INDICATING TRANSMITTER
FR	FLOW RECORDING
FSH	FLOW SWITCH HIGH
FSL	FLOW SWITCH LOW
FV	FLOW CONTROL OR ON/OFF VALVE
FQ	FLOW TOTALIZER
FX	ELEMENT CONTROLLED BY FLOW
FY	FLOW SIGNAL CONVERT, I/P, OR SOLN

PRESSURE INSTRUMENTS

PAH	PRESSURE ALARM HIGH
PAL	PRESSURE ALARM LOW
PC	PRESSURE CONTROLLER
PCV	SELF REG PRESS CONTROL VALVE
PDH	DIFFERENTIAL PRESSURE HIGH
PDI	DIFFERENTIAL PRESSURE INDICATOR
PDIT	DIFF PRESS INDICATING TRANSMITTER
PDSH	DIFFERENTIAL PRESS SWITCH HIGH
PG	PRESSURE GAUGE
PI	PRESSURE INDICATOR
PIC	PRESSURE INDICATING CONTROLLER
PIT	PRESSURE INDICATING TRANSMITTER
PSH	PRESSURE SWITCH HIGH
PSL	PRESSURE SWITCH LOW
PSV	SELF REG PRESS SAFETY VALVE
PT	PRESSURE TRANSMITTER
PX	ELEMENT CONTROLLED BY PRESSURE
PY	PRESS SIGNAL CONVERT, I/P, OR SOLN
PSLH	PRESSURE SWITCH LOW HIGH

LEVEL INSTRUMENTS

LAH	LEVEL ALARM HIGH
LAL	LEVEL ALARM LOW
LCV	SELF REG LEVEL CONTROL VALVE
LE	LEVEL ELEMENT
LG	LEVEL GAUGE
LI	LEVEL INDICATOR
LIC	LEVEL INDICATING CONTROLLER
LIT	LEVEL INDICATING TRANSMITTER
LSH	LEVEL SWITCH HIGH
LSL	LEVEL SWITCH LOW
LT	LEVEL TRANSMITTER
LV	LEVEL CONTROL OR ON/OFF VALVE
LX	ELEMENT CONTROLLED BY LEVEL
LY	LEVEL SIGNAL CONVERT, I/P, OR SOLN

TEMPERATURE INSTRUMENTS

TAH	TEMPERATURE ALARM HIGH
TAL	TEMPERATURE ALARM LOW
TC	TEMPERATURE CONTROLLER
TE	TEMPERATURE ELEMENT
TG	TEMPERATURE GAUGE
TI	TEMPERATURE INDICATOR
TIC	TEMP INDICATING CONTROLLER
TIT	TEMP INDICATING TRANSMITTER
TSH	TEMPERATURE SWITCH HIGH
TSL	TEMPERATURE SWITCH LOW
TT	TEMPERATURE TRANSMITTER
TV	TEMP CONTROL OR ON/OFF VALVE
TX	ELEMENT CONTROLLED BY TEMP
TY	TEMP SIGNAL CONVERT, I/P, OR SOLN

ELECTRICAL ABBREVIATIONS

JB	JUNCTION BOX
MCP	MAIN CONTROL PANEL
RIO	REMOTE I/O PANEL
PP	POWER PANEL
VFD	VARIABLE FREQUENCY DRIVE
HOA	HAND-OFF-AUTO

ANALYTICAL INSTRUMENTS

AAH	ANALYTICAL ALARM HIGH
AAL	ANALYTICAL ALARM LOW
AE	ANALYTICAL ELEMENT
AI	ANALYTICAL INDICATOR
AIC	ANAL INDICATING CONTROLLER
AIT	ANAL INDICATING TRANSMITTER
ASH	ANALYTICAL SWITCH HIGH
ASL	ANALYTICAL SWITCH LOW
AT	ANALYTICAL TRANSMITTER
AX	ELEMENT CONTROLLED BY ANALYTICAL
AY	ANALYTICAL SIGNAL CONVERT, I/P, OR SOL

MISCELLANEOUS INSTRUMENTS

HS	HAND SWITCH
HI	HAND SWITCH POSITION INDICATOR
II	CURRENT INDICATOR
QQI	TOTALIZER INDICATOR
SC	SPEED CONTROLLER
SI	SPEED INDICATOR
YA	MOTOR ALARM
YC	MOTOR CONTROL
YI	MOTOR ON/OFF INDICATOR
ZIC	SWITCH CLOSE INDICATOR
ZIO	SWITCH OPEN INDICATOR
ZSC	POSITION SWITCH CLOSED
ZSO	POSITION SWITCH OPEN
ZT	POSITION TRANSMITTER
ZI	POSITION INDICATOR

VALVES & EQUIPMENT

AC	AIR COMPRESSOR
ARV	AIR RELEASE VALVE
AS	AIR SUPPLY
B	BLOWER
BT	BULK TOTE
CBD	COARSE BUBBLE DIFFUSER
CV	CHECK VALVE
ED	EDUCTOR
F	FILTER
FBD	FINE BUBBLE DIFFUSER
FL	FAIL LAST (DEFAULT IF NOT SHOWN)
FC	FAIL CLOSED
FO	FAIL OPEN
FQG	CALIBRATION COLUMN
H	HEATER
HCV	HAND CONTROL VALVE
HTR	HEATER
HV	HAND VALVE
M	MOTOR
MX	MIXER
P	PUMP
RT	RESIN TRAP
ST	SPILL TANK
STR	STRAINER
T	TANK
UV	ULTRAVIOLET
HV	HAND VALVE
MV	MULTI FUNCTION VALVE

OTHER ABBREVIATIONS

CAP	CAPACITANCE
CIP	CLEAN-IN-PLACE
COND	CONDUCTIVITY
DO2	DISSOLVED OXYGEN
ESP	EMERGENCY STOP
IA	INSTRUMENT AIR
I/P	CURRENT TO PNEUMATIC CONVERTER
ORP	OXIDATION REDUCTION POTENTIAL
pH	HYDROGEN ION
RES	RESISTIVITY
RTD	RESISTANCE TEMP DETECTOR
SOL	SOLENOID
SP	SET POINT
uS	MICROSIEMENS
MIT	MEMBRANE INTEGRITY TEST

NOTE:
THE INFORMATION, SPECIFICATIONS AND DATA SHOWN ON THIS PRINT ARE FURNISHED BY AND ARE TO REMAIN THE PROPERTY OF H_2O INNOVATION.

THE PURPOSE OF THIS DOCUMENT IS TO FACILITATE THE INSTALLATION, MAINTENANCE AND OPERATION OF THE EQUIPMENT REPRESENTED BY SAID PRINT. NO OTHER USE OF THIS DOCUMENT SHALL BE MADE WITHOUT EXPRESS WRITTEN CONSENT FROM H_2O INNOVATION.

DRAWING REVISION

REV	DATE (DD/MM/YYYY)	REVISION DESCRIPTION	DRAWN	CHKD	ENG	APPVD
04	03/02/2021	AS INSTALLED	Y.D.	R.D.	R.D.	A.M.
03	13/11/2020	AS BUILT	Y.D.	R.D.	R.D.	A.M.
02	10/06/2020	FOR CONSTRUCTION	Y.D.	R.D.	R.D.	A.M.
01	13/05/2020	MODIFIED PER COMMENTS, MODIFIED INTERCONNECTION WITH MAIN PLANT	G.B.	R.D.	R.D.	A.M.
00	04/23/2020	INITIAL RELEASE	Y.D.	R.D.	H.C.	A.M.

h2o innovation — knowledge to share.du savoir à partager

UNLESS NOTED OTHERWISE
INTERPRETATION: ANSI Y14.5
TOLERANCES
FRACTIONS: ±1/64"
DECIMALS 0.X: ±0.030
0.XX: ±0.015
ANGLES: ±0.5°
HOLE SIZES: ±1/64"
HOLE CENTERS: ±1/32"
DO NOT SCALE PRINTS

MELIADINE STP EXPANSION

83 M3/DAY

TITLE: PIPING AND INSTRUMENTION DIAGRAMS LEGEND

SCALE: N/A

DRAWING NUMBER: 20C1131-C01-0001

SHEET: 1 of 1

REVISION 04

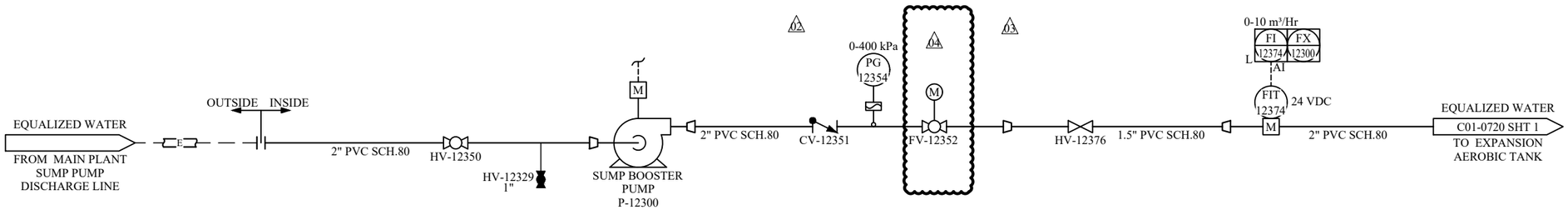

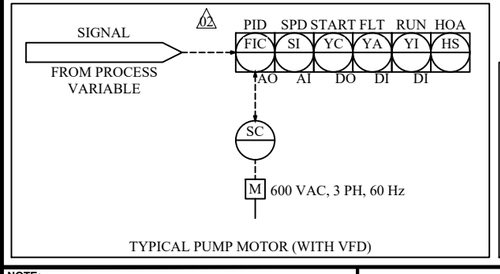

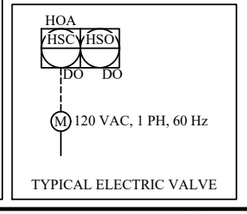

NOTE:
THE INFORMATION, SPECIFICATIONS AND DATA SHOWN ON THIS PRINT ARE FURNISHED BY AND ARE TO REMAIN THE PROPERTY OF H_2O INNOVATION.

THE PURPOSE OF THIS DOCUMENT IS TO FACILITATE THE INSTALLATION, MAINTENANCE AND OPERATION OF THE EQUIPMENT REPRESENTED BY SAID PRINT. NO OTHER USE OF THIS DOCUMENT SHALL BE MADE WITHOUT EXPRESS WRITTEN CONSENT FROM H_2O INNOVATION.

DRAWING REVISION

REV	DATE (DD/MM/YYYY)	REVISION DESCRIPTION	DRAWN	CHKD	ENG	APPVD
04	03/02/2021	AS INSTALLED	Y.D.	R.D.	R.D.	A.M.
03	13/11/2020	AS BUILT	Y.D.	R.D.	R.D.	A.M.
02	10/06/2020	FOR CONSTRUCTION	Y.D.	R.D.	R.D.	A.M.
01	13/05/2020	MODIFIED PER COMMENTS, MODIFIED INTERCONNECTION WITH MAIN PLANT	G.B.	R.D.	R.D.	A.M.
00	04/23/2020	INITIAL RELEASE	Y.D.	R.D.	H.C.	A.M.

h2O innovation
knowledge to share du savoir à partager

UNLESS NOTED OTHERWISE
INTERPRETATION: ANSI Y14.5
TOLERANCES
FRACTIONS: ±1/16"
DECIMALS 0.X: ±0.030
0.XX: ±0.015
0.XXX: ±0.5"
ANGLES: ±1°
HOLE SIZES: ±1/32"
HOLE CENTERS: ±1/8"
DO NOT SCALE PRINTS

MELIADINE STP EXPANSION

83 M3/DAY

TITLE:
SUMP BOOSTER PUMP
PIPING & INSTRUMENTATION DIAGRAM

SCALE: N/A

DRAWING NUMBER: 20C1131-C01-0110

SHEET: 1 of 1

REVISION 04

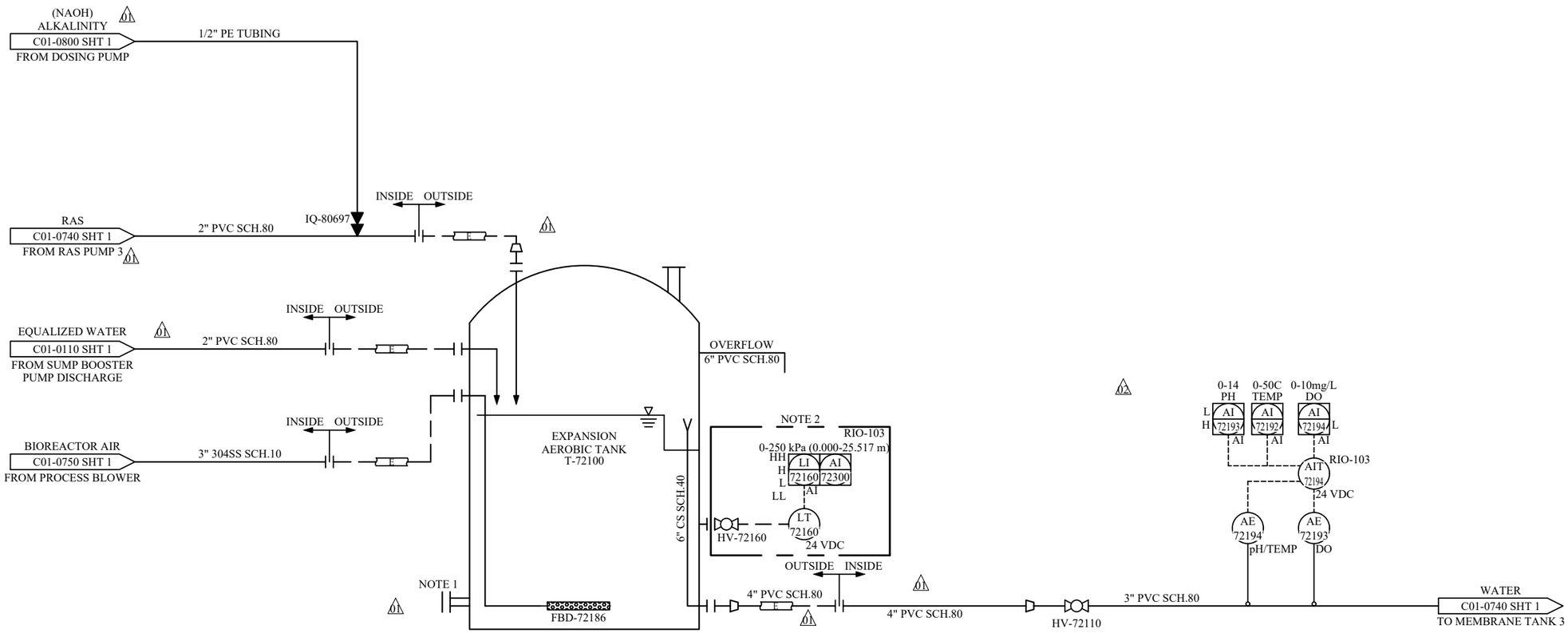

NOTES:

1. DOOR HATCH ACCESS.
2. PROTECTION COVER.

NOTE:
THE INFORMATION, SPECIFICATIONS AND DATA SHOWN ON THIS PRINT ARE FURNISHED BY AND ARE TO REMAIN THE PROPERTY OF H_2O INNOVATION.

THE PURPOSE OF THIS DOCUMENT IS TO FACILITATE THE INSTALLATION, MAINTENANCE AND OPERATION OF THE EQUIPMENT REPRESENTED BY SAID PRINT. NO OTHER USE OF THIS DOCUMENT SHALL BE MADE WITHOUT EXPRESS WRITTEN CONSENT FROM H_2O INNOVATION.

DRAWING REVISION

REV	DATE (DD/MM/YYYY)	REVISION DESCRIPTION	DRAWN	CHKD	ENG	APPVD
04	03/02/2021	AS INSTALLED	Y.D.	R.D.	R.D.	A.M.
03	13/11/2020	AS BUILT	Y.D.	R.D.	R.D.	A.M.
02	10/06/2020	FOR CONSTRUCTION	Y.D.	R.D.	R.D.	A.M.
01	13/05/2020	MODIFIED PER COMMENTS, MODIFIED INTERCONNECTION WITH MAIN PLANT	G.B.	R.D.	R.D.	A.M.
00	04/23/2020	INITIAL RELEASE	Y.D.	R.D.	H.C.	A.M.

h2o innovation
knowledge to share du savoir à partager

UNLESS NOTED OTHERWISE
INTERPRETATION: ANSI Y14.5
TOLERANCES
FRACTIONS: ±1/16"
DECIMALS 0.X: ±0.030
0.XX: ±0.015
ANGLES: ±0.5°
HOLE SIZES: ±1/64"
HOLE CENTERS: ±1/32"
DO NOT SCALE PRINTS

MELIADINE STP EXPANSION

83 M3/DAY

TITLE:
PIPING AND INSTRUMENTATION
PROCESS & INSTRUMENTATION DIAGRAM

SCALE: N/A

DRAWING NUMBER: 20C1131-C01-0720
SHEET: 1 of 1

REVISION 04

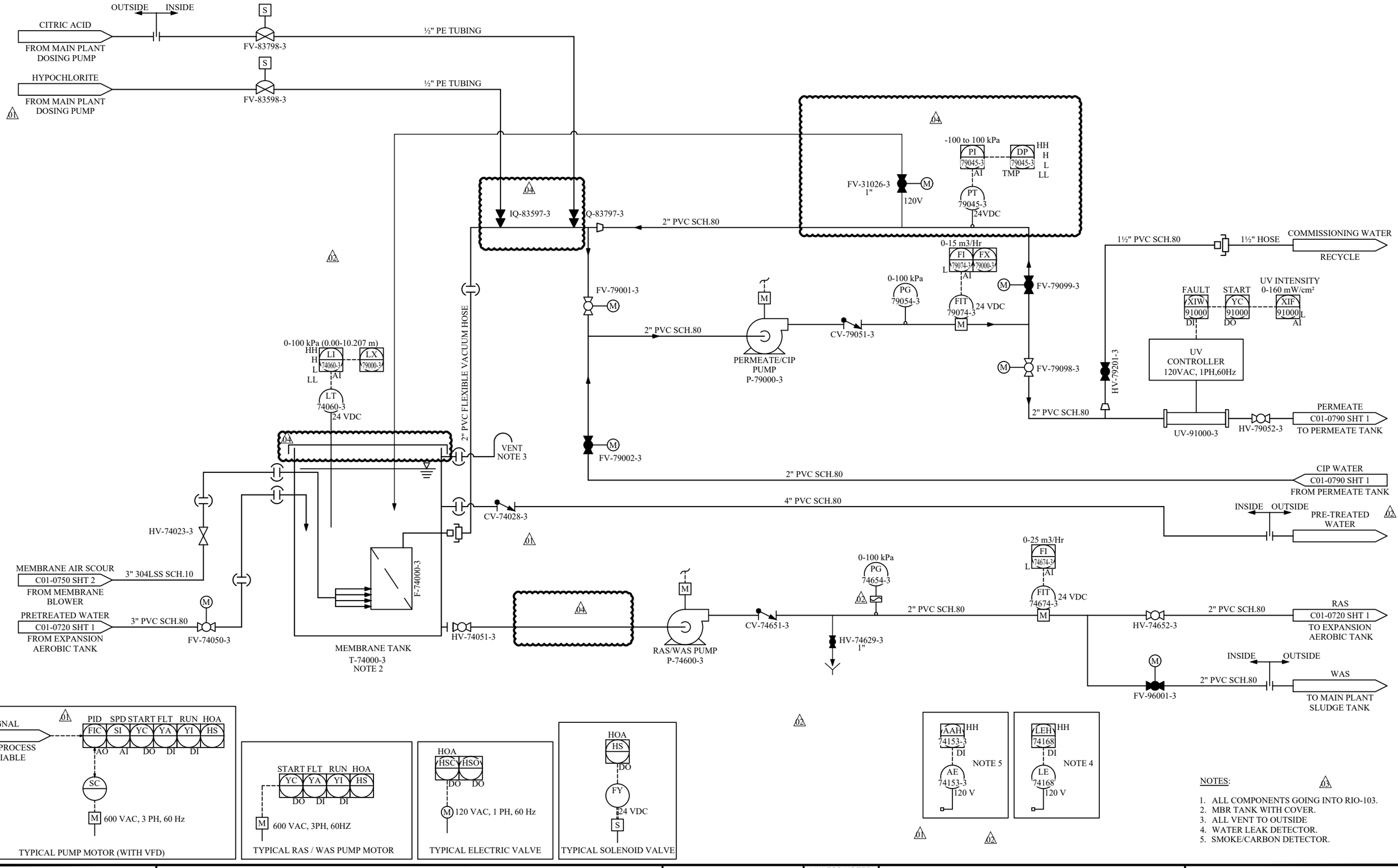

NOTES:

1. ALL COMPONENTS GOING INTO RIO-103.
2. MBR TANK WITH COVER.
3. ALL VENT TO OUTSIDE
4. WATER LEAK DETECTOR.
5. SMOKE/CARBON DETECTOR.

NOTE:
THE INFORMATION, SPECIFICATIONS AND DATA SHOWN ON THIS PRINT ARE FURNISHED BY AND ARE TO REMAIN THE PROPERTY OF H_2O INNOVATION.

THE PURPOSE OF THIS DOCUMENT IS TO FACILITATE THE INSTALLATION, MAINTENANCE AND OPERATION OF THE EQUIPMENT REPRESENTED BY SAID PRINT. NO OTHER USE OF THIS DOCUMENT SHALL BE MADE WITHOUT EXPRESS WRITTEN CONSENT FROM H_2O INNOVATION.

DRAWING REVISION

REV	DATE (DD/MM/YYYY)	REVISION DESCRIPTION	DRAWN	CHKD	ENG	APPVD
04	03/02/2021	AS INSTALLED	Y.D.	R.D.	R.D.	A.M.
03	13/11/2020	AS BUILT	Y.D.	R.D.	R.D.	A.M.
02	10/06/2020	FOR CONSTRUCTION	Y.D.	R.D.	R.D.	A.M.
01	13/05/2020	MODIFIED PER COMMENTS, MODIFIED INTERCONNECTION WITH MAIN PLANT	G.B.	R.D.	R.D.	A.M.
00	04/23/2020	INITIAL RELEASE	Y.D.	R.D.	H.C.	A.M.

h2o innovation
knowledge to share du savoir à partager

UNLESS NOTED OTHERWISE
INTERPRETATION: ANSI Y14.5
TOLERANCES
FRACTIONS: ±1/64"
DECIMALS X.X: ±0.030
X.XX: ±0.015
X.XXX: ±0.5°
ANGLES: ±1/64"
HOLE SIZES: ±1/32"
HOLE CENTERS:
DO NOT SCALE PRINTS

MELIADINE STP EXPANSION

83 M3/DAY

TITLE:
PIPING AND INSTRUMENTATION
PROCESS & INSTRUMENTATION DIAGRAM

SCALE:	DRAWING NUMBER:	REVISION
N/A	20C1131-C01-0740	04
	SHEET: 1 of 1	

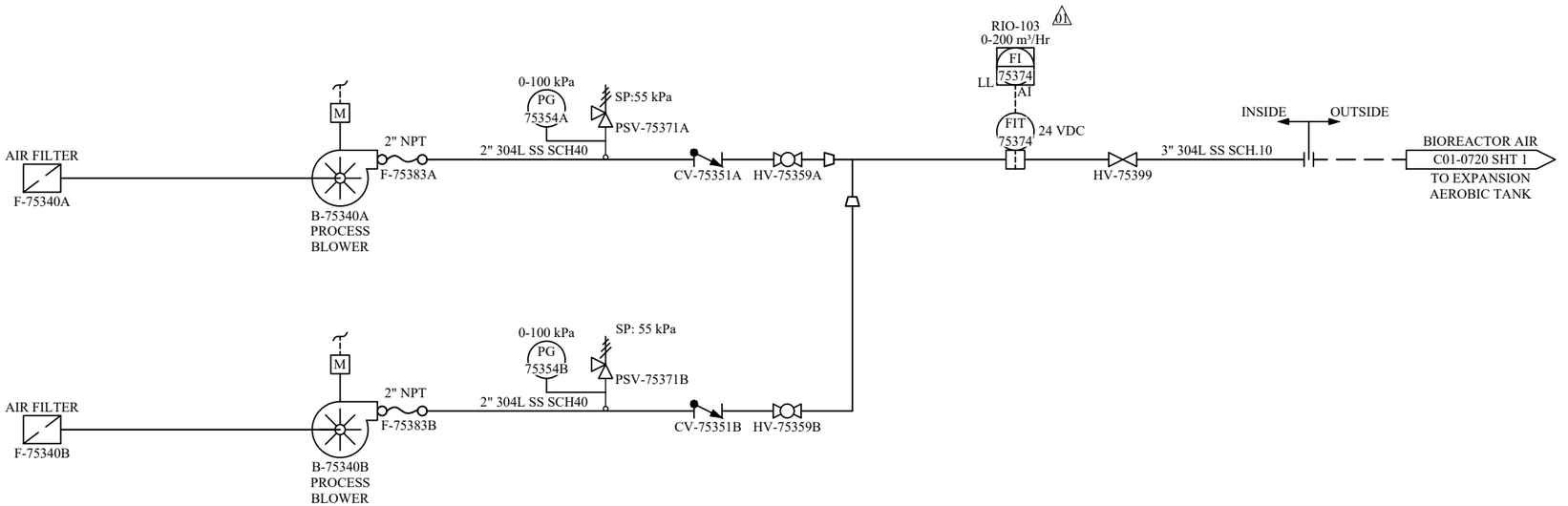

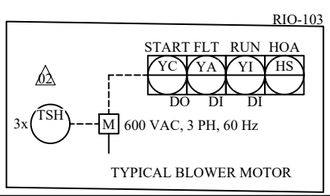

NOTE:
THE INFORMATION, SPECIFICATIONS AND DATA SHOWN ON THIS PRINT ARE FURNISHED BY AND ARE TO REMAIN THE PROPERTY OF H_2O INNOVATION.

THE PURPOSE OF THIS DOCUMENT IS TO FACILITATE THE INSTALLATION, MAINTENANCE AND OPERATION OF THE EQUIPMENT REPRESENTED BY SAID PRINT. NO OTHER USE OF THIS DOCUMENT SHALL BE MADE WITHOUT EXPRESS WRITTEN CONSENT FROM H_2O INNOVATION.

DRAWING REVISION

REV	DATE (DD/MM/YYYY)	REVISION DESCRIPTION	DRAWN	CHKD	ENG	APPVD
04	03/02/2021	AS INSTALLED	Y.D.	R.D.	R.D.	A.M.
03	13/11/2020	AS BUILT	Y.D.	R.D.	R.D.	A.M.
02	10/06/2020	FOR CONSTRUCTION	Y.D.	R.D.	R.D.	A.M.
01	13/05/2020	MODIFIED PER COMMENTS, MODIFIED INTERCONNECTION WITH MAIN PLANT	G.B.	R.D.	R.D.	A.M.
00	04/23/2020	INITIAL RELEASE	Y.D.	R.D.	H.C.	A.M.

h2o innovation
knowledge to share du savoir à partager

UNLESS NOTED OTHERWISE
INTERPRETATION: ANSI Y14.5
TOLERANCES
FRACTIONS: ±1/64"
DECIMALS 0.X: ±0.030
0.XX: ±0.015
ANGLES: ±0.5°
HOLE SIZES: ±1/64"
HOLE CENTERS: ±1/32"
DO NOT SCALE PRINTS

MELIADINE STP EXPANSION

83 M3/DAY

TITLE:
PIPING AND INSTRUMENTATION
PROCESS & INSTRUMENTATION DIAGRAM

SCALE: N/A

DRAWING NUMBER: 20C1131-C01-0750
SHEET: 1 of 2

REVISION 04

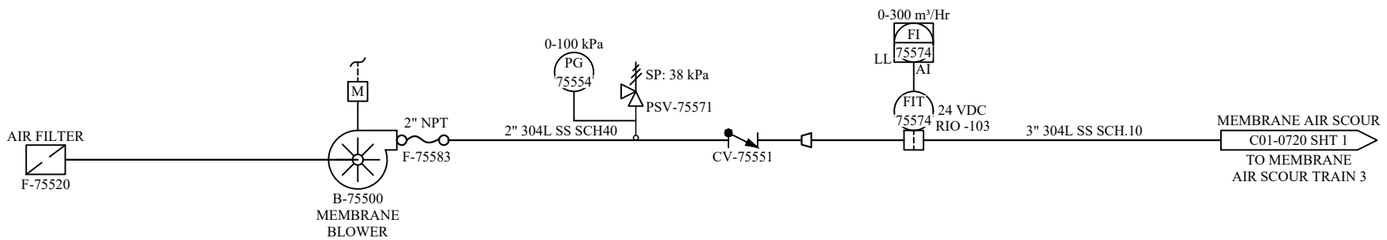

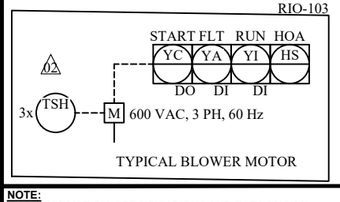

NOTE:
THE INFORMATION, SPECIFICATIONS AND DATA SHOWN ON THIS PRINT ARE FURNISHED BY AND ARE TO REMAIN THE PROPERTY OF H_2O INNOVATION.

THE PURPOSE OF THIS DOCUMENT IS TO FACILITATE THE INSTALLATION, MAINTENANCE AND OPERATION OF THE EQUIPMENT REPRESENTED BY SAID PRINT. NO OTHER USE OF THIS DOCUMENT SHALL BE MADE WITHOUT EXPRESS WRITTEN CONSENT FROM H_2O INNOVATION.

DRAWING REVISION

REV	DATE (DD/MM/YYYY)	REVISION DESCRIPTION	DRAWN	CHKD	ENG	APPVD
04	03/02/2021	AS INSTALLED	Y.D.	R.D.	R.D.	A.M.
03	13/11/2020	AS BUILT	Y.D.	R.D.	R.D.	A.M.
02	10/06/2020	FOR CONSTRUCTION	Y.D.	R.D.	R.D.	A.M.
01	13/05/2020	MODIFIED PER COMMENTS, MODIFIED INTERCONNECTION WITH MAIN PLANT	G.B.	R.D.	R.D.	A.M.
00	04/23/2020	INITIAL RELEASE	Y.D.	R.D.	H.C.	A.M.

h2o innovation
knowledge to share du savoir à partager

UNLESS NOTED OTHERWISE
INTERPRETATION: ANSI Y14.5
TOLERANCES
FRACTIONS: ±1/16"
DECIMALS 0.X: ±0.030
0.XX: ±0.015
ANGLES: ±0.5°
HOLE SIZES: ±1/32"
HOLE CENTERS: ±1/32"
DO NOT SCALE PRINTS

MELIADINE STP EXPANSION

83 M3/DAY

TITLE:
PIPING AND INSTRUMENTATION
PROCESS & INSTRUMENTATION DIAGRAM

SCALE:	DRAWING NUMBER:	REVISION
N/A	20C1131-C01-0750	04
	SHEET: 2 of 2	

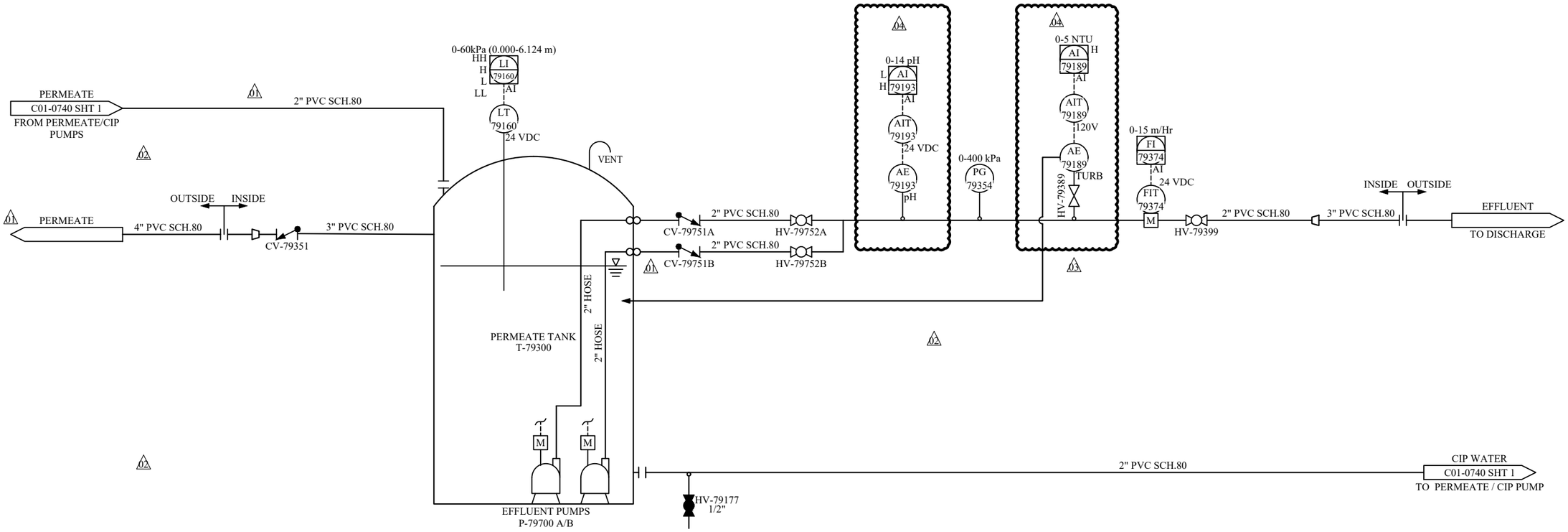

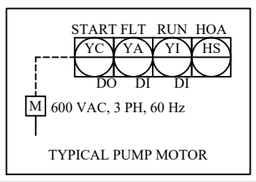

NOTES:

1. ALL COMPONANTS GOING INTO RIO-103.

NOTE:
THE INFORMATION, SPECIFICATIONS AND DATA SHOWN ON THIS PRINT ARE FURNISHED BY AND ARE TO REMAIN THE PROPERTY OF H_2O INNOVATION.

THE PURPOSE OF THIS DOCUMENT IS TO FACILITATE THE INSTALLATION, MAINTENANCE AND OPERATION OF THE EQUIPMENT REPRESENTED BY SAID PRINT. NO OTHER USE OF THIS DOCUMENT SHALL BE MADE WITHOUT EXPRESS WRITTEN CONSENT FROM H_2O INNOVATION.

DRAWING REVISION

REV	DATE (DD/MM/YYYY)	REVISION DESCRIPTION	DRAWN	CHKD	ENG	APPVD
04	03/02/2021	AS INSTALLED	Y.D.	R.D.	R.D.	A.M.
03	13/11/2020	AS BUILT	Y.D.	R.D.	R.D.	A.M.
02	10/06/2020	FOR CONSTRUCTION	Y.D.	R.D.	R.D.	A.M.
01	13/05/2020	MODIFIED PER COMMENTS, MODIFIED INTERCONNECTION WITH MAIN PLANT	G.B.	R.D.	R.D.	A.M.
00	04/23/2020	INITIAL RELEASE	Y.D.	R.D.	H.C.	A.M.

h2o innovation
knowledge to share du savoir à partager

UNLESS NOTED OTHERWISE
INTERPRETATION: ANSI Y14.5
TOLERANCES
FRACTIONS: ±1/64"
DECIMALS 0.X: ±0.030
0.XX: ±0.015
ANGLES: ±0.5°
HOLE SIZES: ±1/64"
HOLE CENTERS: ±1/32"
DO NOT SCALE PRINTS

MELIADINE STP EXPANSION

83 M3/DAY

TITLE:
PIPING AND INSTRUMENTATION
PROCESS & INSTRUMENTATION DIAGRAM

SCALE: N/A

DRAWING NUMBER: 20C1131-C01-0790

SHEET: 1 of 1

REVISION 04

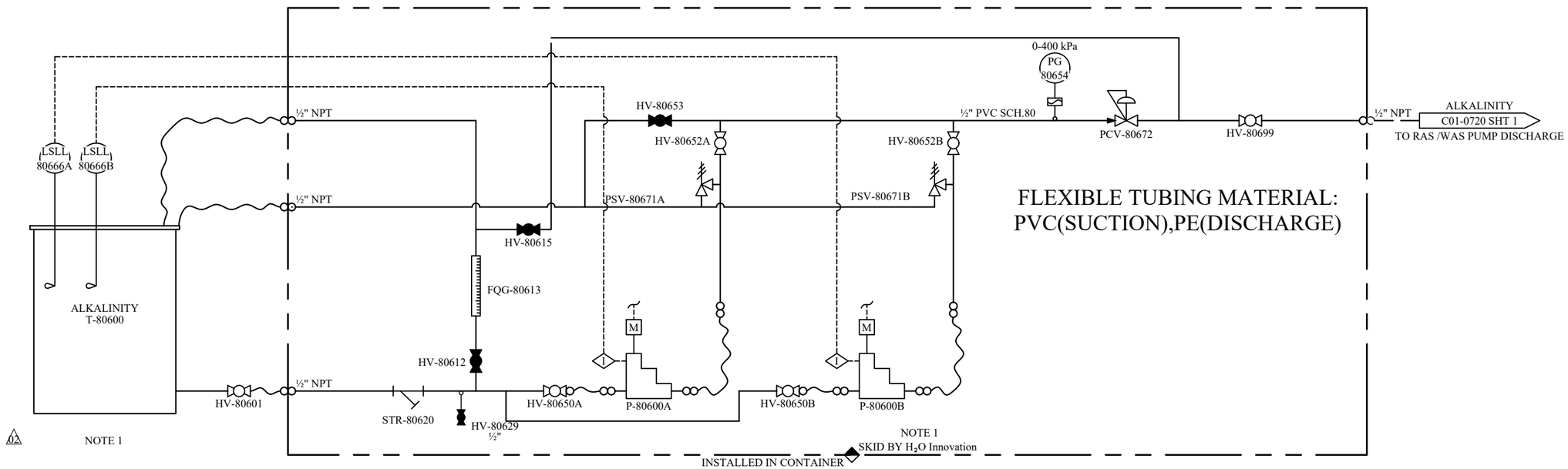

FLEXIBLE TUBING MATERIAL:
PVC(SUCTION),PE(DISCHARGE)

SODIUM HYDROXIDE, 25%, ALKALINITY ADJUSTMENT
01 CHEMICAL DOSING SYSTEM

RIO-103

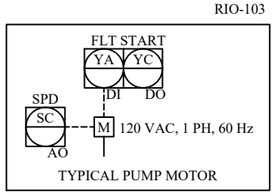

TYPICAL PUMP MOTOR

NOTES:

1. TANK TO BE DOUBLE-WALL STORAGE TYPE

NOTE:
THE INFORMATION, SPECIFICATIONS AND DATA SHOWN ON THIS PRINT ARE FURNISHED BY AND ARE TO REMAIN THE PROPERTY OF H_2O INNOVATION.

THE PURPOSE OF THIS DOCUMENT IS TO FACILITATE THE INSTALLATION, MAINTENANCE AND OPERATION OF THE EQUIPMENT REPRESENTED BY SAID PRINT. NO OTHER USE OF THIS DOCUMENT SHALL BE MADE WITHOUT EXPRESS WRITTEN CONSENT FROM H_2O INNOVATION.

DRAWING REVISION

REV	DATE (DD/MM/YYYY)	REVISION DESCRIPTION	DRAWN	CHKD	ENG	APPVD
04	03/02/2021	AS INSTALLED	Y.D.	R.D.	R.D.	A.M.
03	13/11/2020	AS BUILT	Y.D.	R.D.	R.D.	A.M.
02	10/06/2020	FOR CONSTRUCTION	Y.D.	R.D.	R.D.	A.M.
01	13/05/2020	MODIFIED PER COMMENTS, MODIFIED INTERCONNECTION WITH MAIN PLANT	G.B.	R.D.	R.D.	A.M.
00	04/23/2020	INITIAL RELEASE	Y.D.	R.D.	H.C.	A.M.

h2o innovation
knowledge to share du savoir à partager

UNLESS NOTED OTHERWISE
INTERPRETATION: ANSI Y14.5
TOLERANCES
FRACTIONS: ±1/64"
DECIMALS 0.X: ±0.030
0.XX: ±0.015
ANGLES: ±0.5°
HOLE SIZES: ±1/64"
HOLE CENTERS: ±1/32"
DO NOT SCALE PRINTS

MELIADINE STP EXPANSION

83 M3/DAY

TITLE:
PIPING AND INSTRUMENTATION
PROCESS & INSTRUMENTATION DIAGRAM

SCALE: N/A

DRAWING NUMBER: 20C1131-C01-0800

SHEET: 1 of 1

REVISION 04

9.2 - GENERAL ARRANGEMENT DRAWINGS

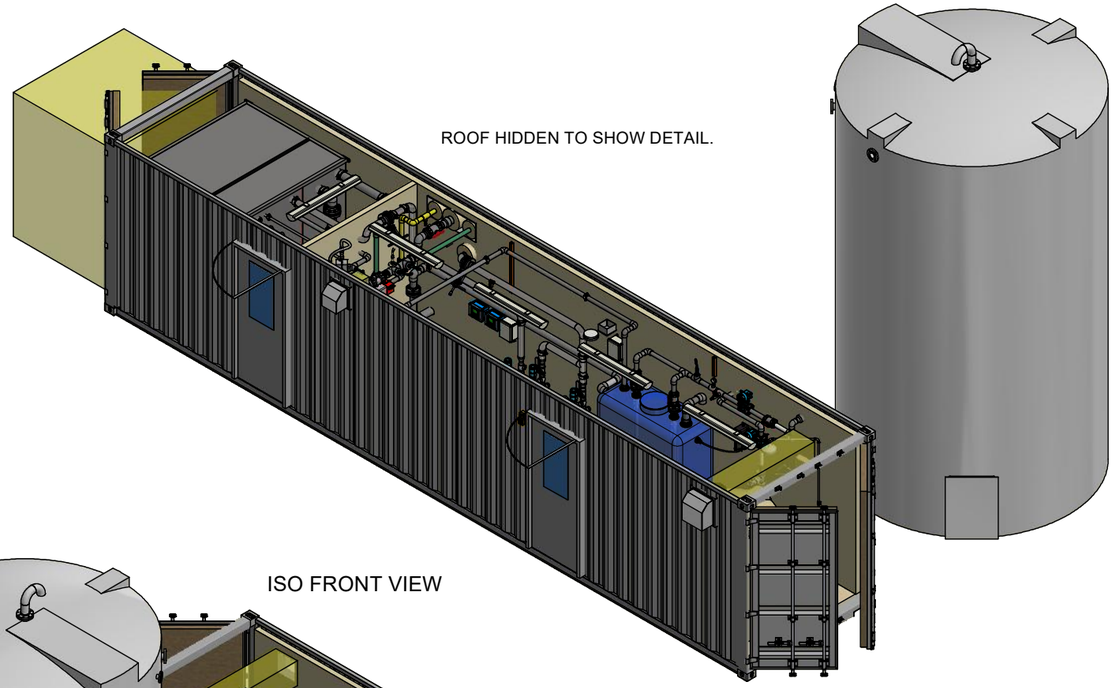

ISO FRONT VIEW

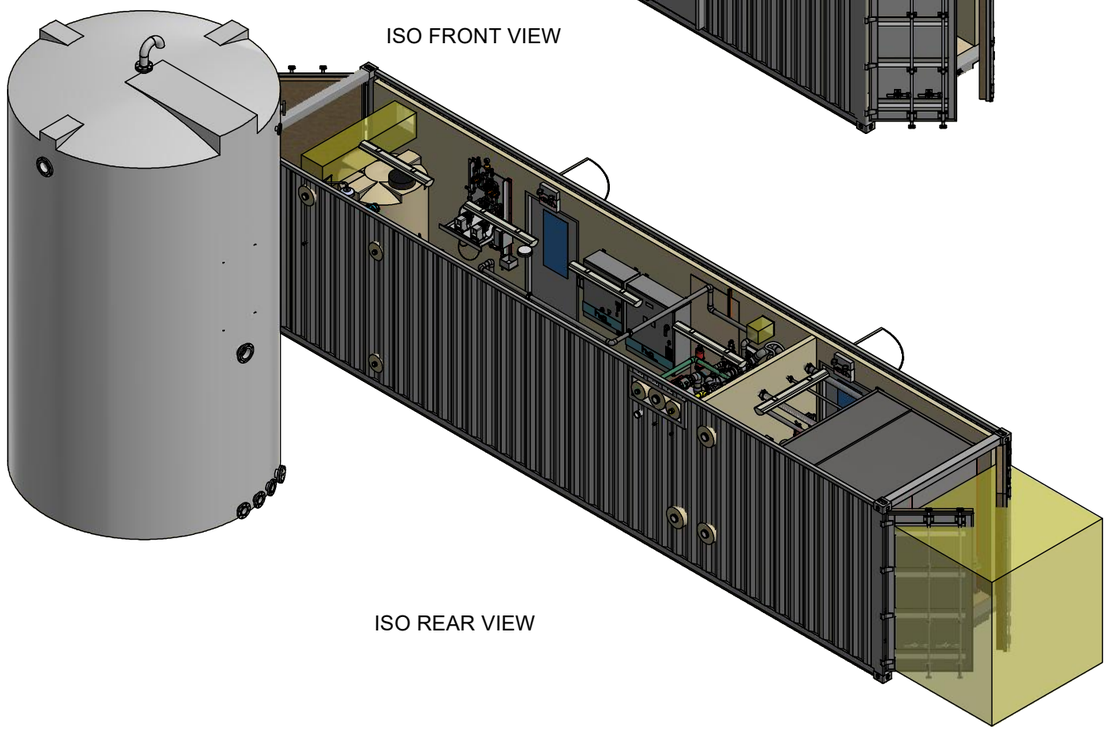

ISO REAR VIEW

NOTES:

1. REFERENCE P&ID: 20C1131-C01-0001
2. APPROXIMATE SHIPPING WEIGHT: 22 000 LBS.
3. ROOF INSULATION TO BE MINIMUM R20.
4. WALL INSULATION TO BE MINIMUM R20.
5. FLOOR INSULATION TO BE MINIMUM R20.
6. MINIMUM INSIDE DIMENSIONS ARE 84'5'' WIDE X 102'' HIGH AND XXX'' LONG.
7. ENSURE THAT LIFTING LUGS ARE USED FOR LIFTING TANKS AND/OR BUILDINGS. LIFTING LUGS FOR TANKS ARE LOCATED AT THE TOP OF THE TANK.
8. CLEARANCE FOR AIR FLOW AND SERVICE REQUIRED AROUND PANEL AIR CONDITIONERS. REFER TO ELECTRICAL DRAWINGS FOR REQUIREMENTS.
9. ALL WELDS, EXCEPT FILLET WELDS, ARE TO BE GROUND FLUSH IN THE FLAT POSITION WITHOUT DISHING.
10. ALL WELDS ARE TO BE 100% VISUALLY INSPECTED.
11. COMPLIANCE WITH CSA W47.1 CERTIFICATION OF COMPANIES FOR FUSION WELDING OF STEEL AND CSA W59 WELDED STEEL CONSTRUCTION REQUIRED.
12. NO VERTICAL DOWN WELDS ARE ALLOWED UNLESS CERTIFIED PER CSA W59 AND APPROVED BY H2O INNOVATION.
13. STITCH WELDS ARE NOT ALLOWED UNLESS PRE-APPROVED BY H2O INNOVATION.
14. NO VERTICAL DOWN WELDS ARE ALLOWED UNLESS CERTIFIED PER AWS D1.6 AND APPROVED BY H2O INNOVATION.
15. STRUCTURAL STEEL WELDING AS PER STRUCTURAL WELDING CODE - STAINLESS STEEL, AWS D1.6.
16. MATERIAL IS TYPE 304L SS. THE MINIMUM YIELD STRENGTH REQUIRED FOR ALL MATERIAL IS 36 KSI.
17. HOLLOW STRUCTURAL STEEL SECTIONS PER ASTM A269.
18. ANGLES AND CHANNELS PER ASTM A276, AND PLATE PER ASTM A240 OR A666. SHAPES FORMED FROM PLATE ARE ACCEPTABLE.
19. STRUCTURAL FRAME WELDS AND AREAS WITH IRON CONTAMINATION TO BE TREATED WITH PICKLE PASTE COMPOUND AND WASHED CLEAN.
20. PUT 1/8'' RADIUS ON ALL CORNERS, FOR SAFETY.
21. BREAK ALL SHARP EDGES, AND REMOVE SPATTER.
22. SINGLE MEMBERS TO BE CONTINUOUS. SEAMED MEMBERS ARE NOT ACCEPTABLE.
23. ALL STAINLESS STEEL PIPING TO BE ASTM A312. ALL STAINLESS STEEL FITTINGS TO BE ASTM A403. FLANGES TO BE ASTM A182 AND ANSI B 16.5.
24. CLASS 150 FITTINGS SHALL MEET MSS SP114 STANDARDS FOR SIZES 1/8'' THRU 4''. THREADS SHALL MEET ANSI B1.20.1. MATERIAL IS ASTM A351 GRADE CF8M OR ASTM A182 GRADE 316 OR ASTM A276.
25. ALL STAINLESS STEEL PIPING TO BE WELDED TO ASME B31.1, 100% PENETRATION AND BACK GASSED WITH ARGON.
26. WELDER CERTIFICATIONS FOR ALL WELDERS MUST BE PROVIDED TO H2O INNOVATION.
27. COMPLETED ASSEMBLY MUST BE LEAK TESTED TO 50 PSIG.
28. TANK 4 HOUR FILL AND HOLD HYDRO TEST REQUIRED.
29. UNWITNESSED TEST REPORT MUST BE PROVIDED.
30. ALL STAINLESS STEEL TO BE PICKLED (DIPPED) AND PASSIVATED TO ASTM A380.
31. BOLTS AND NUTS ARE STAINLESS STEEL TYPE 316.
32. MECHANICAL PROPERTIES PER CONDITION CW OF ASTM F593/F594.
33. THREADS PER ANSI/ASME B1.1 CLASS 2A.
34. WASHERS AND & LOCK WASHERS ARE STAINLESS STEEL TYPE 316 WITH DIMENSIONS PER ASME B18.21.1.
35. ALL PVC PIPE TO BE SCHEDULE 80, GRAY. PIPE MATERIAL TO CONFORM TO ASTM D1784. PHYSICAL DIMENSIONS, SCHEDULES, AND TOLERANCES TO CONFORM TO ASTM D1785.
36. ALL PVC FITTINGS TO BE SCHEDULE 80, GRAY. SOCKET FITTINGS TO CONFORM TO ASTM D2467.
37. PVC FLANGES 3" AND LARGER TO BE VAN STONE STYLE WITH GLASS FILLED PVC RING. PVC FLANGES 2" AND SMALLER TO BE VAN STONE STYLE WITH PVC RING, PVC FLANGES TO MEET CLASS 150 BOLT HOLE PATTERN PER ANSI B16.5.
38. PVC PRIMER TO CONFORM TO ASTM F656. PVC SOLVENT CEMENT TO CONFORM TO ASTM D2564.
39. EXPOSED PVC PIPING REQUIRES SUITABLE UV PROTECTIVE COATING ON SITE. NOT BY H2O INNOVATION.
40. ALL GASKETS TO CONFORM TO ASTM F477.
41. TAP (1/2'' NPT OR SMALLER ONLY) INTO PVC / CPVC FITTING IS ALLOWED, BUT ONLY IN SPECIFIC LOCATIONS WHERE NO ADEQUATE FITTING IS PROVIDED.
42. TUBING MATERIAL IS NYLON.
43. ELECTRICAL CONDUIT MATERIAL IS RIGID PVC.

NOTE:
THE INFORMATION, SPECIFICATIONS AND DATA SHOWN ON THIS PRINT ARE FURNISHED BY AND ARE TO REMAIN THE PROPERTY OF H_2O INNOVATION.

THE PURPOSE OF THIS DOCUMENT IS TO FACILITATE THE INSTALLATION, MAINTENANCE AND OPERATION OF THE EQUIPMENT REPRESENTED BY SAID PRINT. NO OTHER USE OF THIS DOCUMENT SHALL BE MADE WITHOUT EXPRESS WRITTEN CONSENT FROM H_2O INNOVATION.

DRAWING REVISION

REV	DATE (DD/MM/YYYY)	REVISION DESCRIPTION	DRAWN	PEER	ENG	APPVD
03	2021-03-02	AS BUILT	Y.D.	R.D.	R.D.	A.M.
02	2020-11-12	AS BUILT	M.C.	R.D.	R.D.	A.M.
01	2020-06-02	REVISED AS PER ENGINEER COMMENTS	M.C.	R.D.	R.D.	A.M.
00	2020-05-21	INITIAL RELEASE	M.C.	R.D.	R.D.	A.M.

h2o innovation
knowledge to share.du savoir à partager

UNLESS NOTED OTHERWISE
INTERPRETATION: ANSI Y14.5
TOLERANCES
FRACTIONS: ±1/64"
DECIMALS 0.X: ±0.030
0.XX: ±0.015
ANGLES: ±0.5°
HOLE SIZES: ±1/64"
HOLE CENTERS: ±1/64"
DO NOT SCALE PRINTS

MELIADINE WW EXPANSION

MELIADINE , NU

TITLE:
WASTE WATER CONTAINER
GENERAL ARRANGEMENT

SCALE:	DRAWING NUMBER:	REVISION
N/A	20C1131-B01-0001 SHEET: 1 OF 5	03

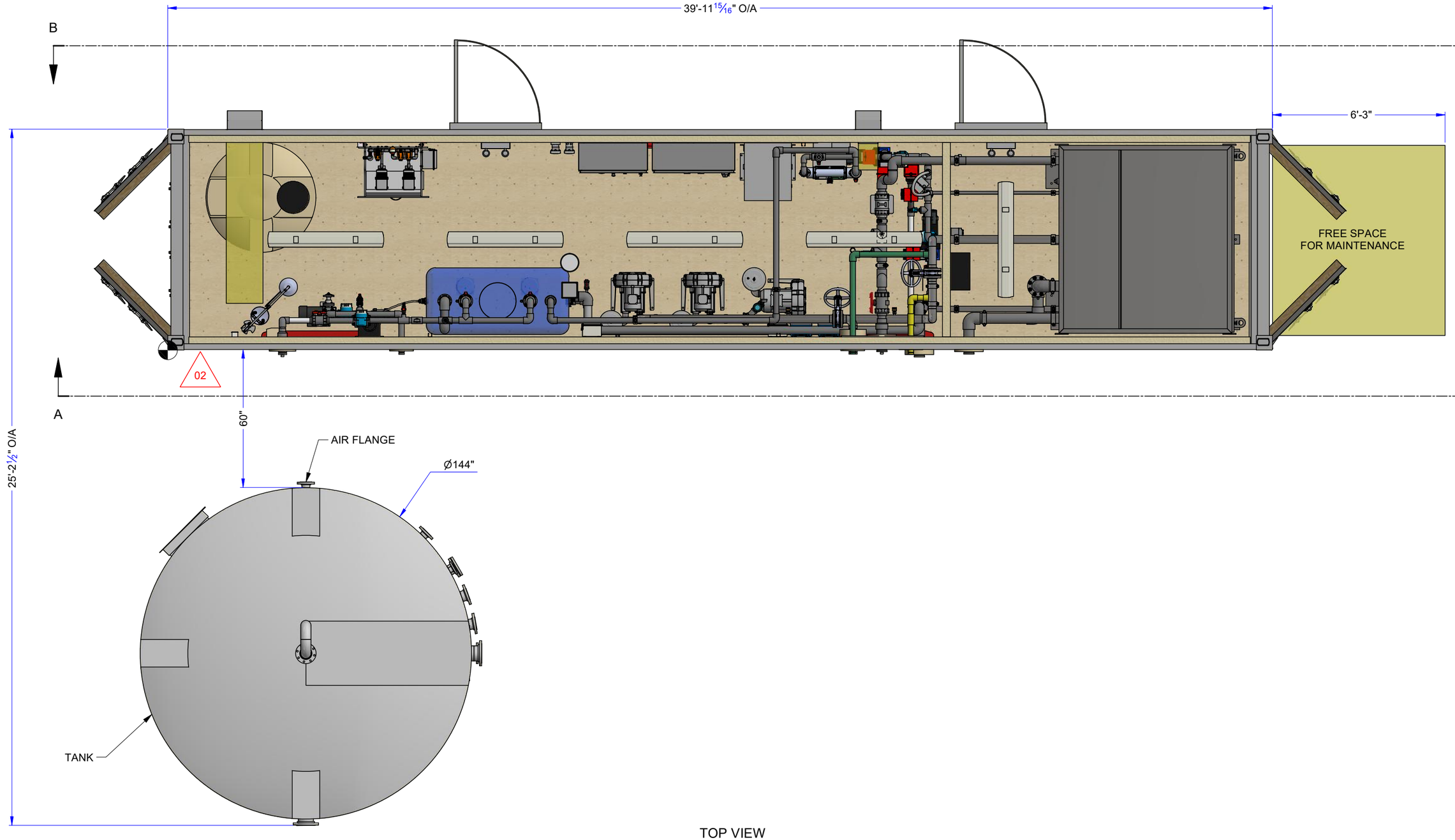

TOP VIEW

NOTE:
THE INFORMATION, SPECIFICATIONS AND DATA SHOWN ON THIS PRINT ARE FURNISHED BY AND ARE TO REMAIN THE PROPERTY OF H_2O INNOVATION.

THE PURPOSE OF THIS DOCUMENT IS TO FACILITATE THE INSTALLATION, MAINTENANCE AND OPERATION OF THE EQUIPMENT REPRESENTED BY SAID PRINT. NO OTHER USE OF THIS DOCUMENT SHALL BE MADE WITHOUT EXPRESS WRITTEN CONSENT FROM H_2O INNOVATION.

DRAWING REVISION

REV	DATE (DD/MM/YYYY)	REVISION DESCRIPTION	DRAWN	PEER	ENG	APPVD
03	2021-03-02	AS BUILT	Y.D.	R.D.	R.D.	A.M.
02	2020-11-12	AS BUILT	M.C.	R.D.	R.D.	A.M.
01	2020-06-02	REVISED AS PER ENGINEER COMMENTS	M.C.	R.D.	R.D.	A.M.
00	2020-05-21	INITIAL RELEASE	M.C.	R.D.	R.D.	A.M.

h2o innovation
knowledge to share.du savoir à partager

UNLESS NOTED OTHERWISE
INTERPRETATION: ANSI Y14.5
TOLERANCES
FRACTIONS: ±1/64"
DECIMALS 0.X: ±0.030
0.XX: ±0.015
ANGLES: ±0.5°
HOLE SIZES: ±1/64"
HOLE CENTERS: ±1/64"
DO NOT SCALE PRINTS

MELIADINE WW EXPANSION

MELIADINE , NU

TITLE:
WASTE WATER CONTAINER
GENERAL ARRANGEMENT

SCALE:	DRAWING NUMBER:	REVISION
N.T.S	20C1131-B01-0001 SHEET: 2 OF 5	03

NOZZLE#	DESCRIPTION	MATERIAL	DIAMETER	CONNECTION
A	EQUALIZED WATER FROM MAIN PLANT SUMP PUMPS DISCHARGE LINE	PVC, SCH.80	2"	CUT GROOVE
B	EQUALIZED WATER TO EXPANSION AEROBIC TANK	PVC, SCH.80	2"	CUT GROOVE
C	MEMBRANE TANK VENT TO OUTSIDE	PVC, SCH.80	4"	CUT GROOVE
D	MEMBRANE TANK OVERFLOW	PVC, SCH.80	4"	CUT GROOVE
E	PERMEATE TANK OVERFLOW	PVC, SCH.80	4"	CUT GROOVE
F	PERMEATE EFFLUENT TO DISCHARGE	PVC, SCH.80	3"	CUT GROOVE
G	BIOREACTOR AIR TO EXPANSION AEROBIC TANK	SS 304, SCH.10	3"	CUT GROOVE
H	WAS TO MAIN PLANT SLUDGE TANK	PVC, SCH.80	2"	CUT GROOVE
I	RAS TO EXPANSION AEROBIC TANK	PVC, SCH.80	2"	CUT GROOVE
J	PRETREATED WATER FROM EXPANSION AEROBIC TANK	PVC, SCH.80	4"	CUT GROOVE
K	POTABLE WATER	PVC, SCH.80	1/2"	FNPT
L	CITRIC ACID	PVC, SCH.80	1/2"	FNPT
M	HYPOCHLORITE	PVC, SCH.80	1/2"	FNPT

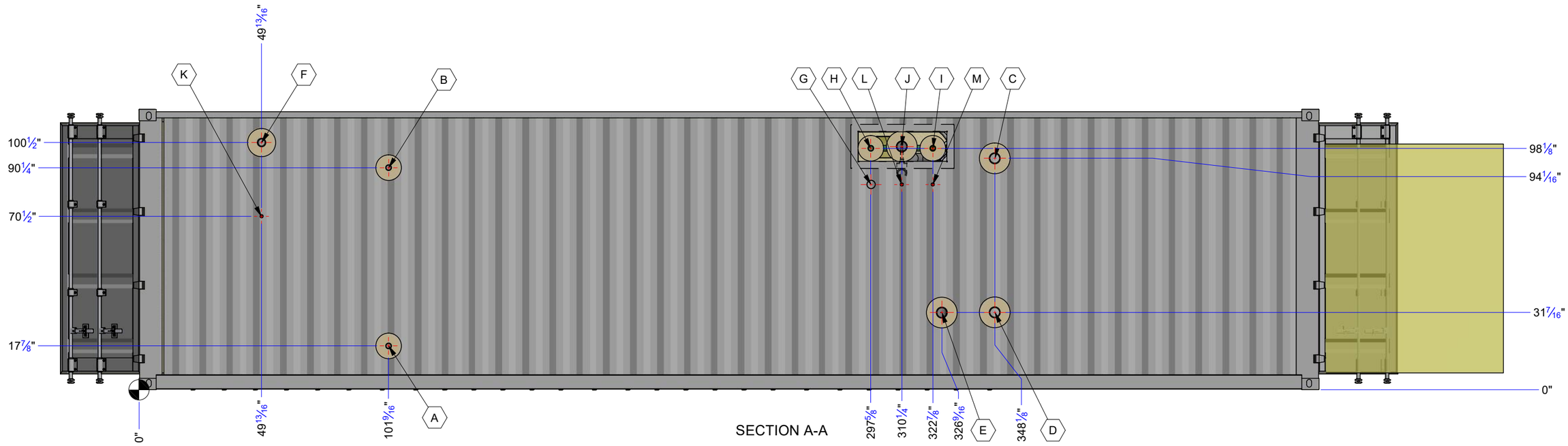

SECTION A-A

NOTE:
THE INFORMATION, SPECIFICATIONS AND DATA SHOWN ON THIS PRINT ARE FURNISHED BY AND ARE TO REMAIN THE PROPERTY OF H_2O INNOVATION.

THE PURPOSE OF THIS DOCUMENT IS TO FACILITATE THE INSTALLATION, MAINTENANCE AND OPERATION OF THE EQUIPMENT REPRESENTED BY SAID PRINT. NO OTHER USE OF THIS DOCUMENT SHALL BE MADE WITHOUT EXPRESS WRITTEN CONSENT FROM H_2O INNOVATION.

DRAWING REVISION

REV	DATE (DD/MM/YYYY)	REVISION DESCRIPTION	DRAWN	PEER	ENG	APPVD
03	2021-03-02	AS BUILT	Y.D.	R.D.	R.D.	A.M.
02	2020-11-12	AS BUILT	M.C.	R.D.	R.D.	A.M.
01	2020-06-02	REVISED AS PER ENGINEER COMMENTS	M.C.	R.D.	R.D.	A.M.
00	2020-05-21	INITIAL RELEASE	M.C.	R.D.	R.D.	A.M.

h2o innovation
knowledge to share.du savoir à partager

UNLESS NOTED OTHERWISE
INTERPRETATION: ANSI Y14.5
TOLERANCES
FRACTIONS: ±1/64"
DECIMALS 0.X: ±0.030
0.XX: ±0.015
ANGLES: ±0.5°
HOLE SIZES: ±1/64"
HOLE CENTERS: ±1/64"
DO NOT SCALE PRINTS

MELIADINE WW EXPANSION

MELIADINE , NU

TITLE:
WASTE WATER CONTAINER
GENERAL ARRANGEMENT

SCALE:	DRAWING NUMBER:	REVISION
N/A	20C1131-B01-0001 SHEET: 3 OF 5	03

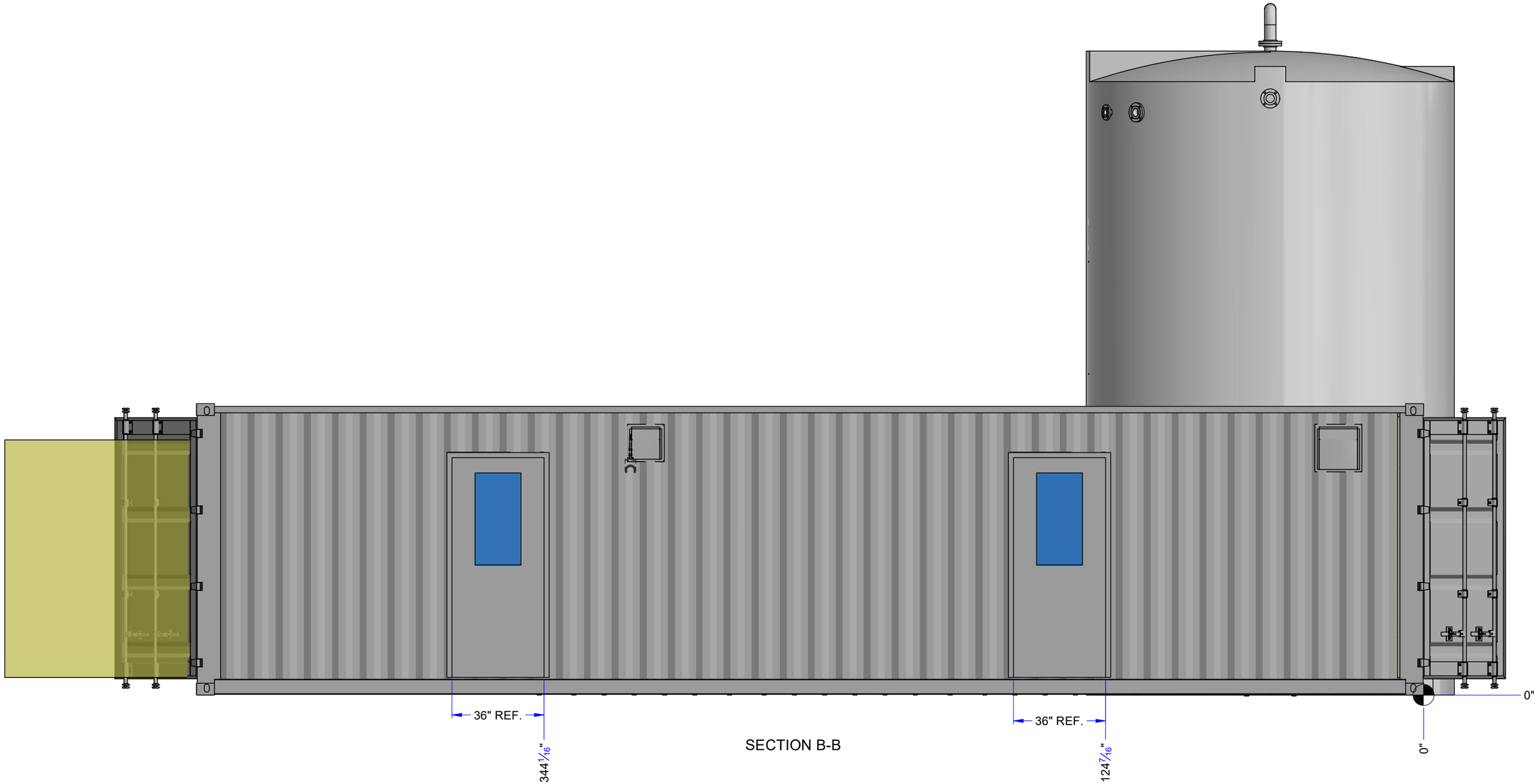

SECTION B-B

NOTE:
THE INFORMATION, SPECIFICATIONS AND DATA SHOWN ON THIS PRINT ARE FURNISHED BY AND ARE TO REMAIN THE PROPERTY OF H_2O INNOVATION.

THE PURPOSE OF THIS DOCUMENT IS TO FACILITATE THE INSTALLATION, MAINTENANCE AND OPERATION OF THE EQUIPMENT REPRESENTED BY SAID PRINT. NO OTHER USE OF THIS DOCUMENT SHALL BE MADE WITHOUT EXPRESS WRITTEN CONSENT FROM H_2O INNOVATION.

DRAWING REVISION

REV	DATE (YYYY-MM-DD)	REVISION DESCRIPTION	DRAWN	PEER	ENG	APPVD
03	2021-03-02	AS BUILT	Y.D.	R.D.	R.D.	A.M.
02	2020-11-12	AS BUILT	M.C.	R.D.	R.D.	A.M.
01	2020-06-02	REVISED AS PER ENGINEER COMMENTS	M.C.	R.D.	R.D.	A.M.
00	2020-05-21	INITIAL RELEASE	M.C.	R.D.	R.D.	A.M.

h2o innovation
knowledge to share.du savoir à partager

UNLESS NOTED OTHERWISE
INTERPRETATION: ANSI Y14.5
TOLERANCES:
FRACTIONS: ±1/64"
DECIMALS 0.X: ±0.030
0.XX: ±0.015
ANGLES: ±0.5°
HOLE SIZES: ±1/64"
HOLE CENTERS: ±1/64"
DO NOT SCALE PRINTS

MELIADINE WW EXPANSION

MELIADINE , NU

TITLE:
WASTE WATER CONTAINER
GENERAL ARRANGEMENT

SCALE:	DRAWING NUMBER:	REVISION
N/A	20C1131-B01-0001 SHEET: 4 OF 5	03

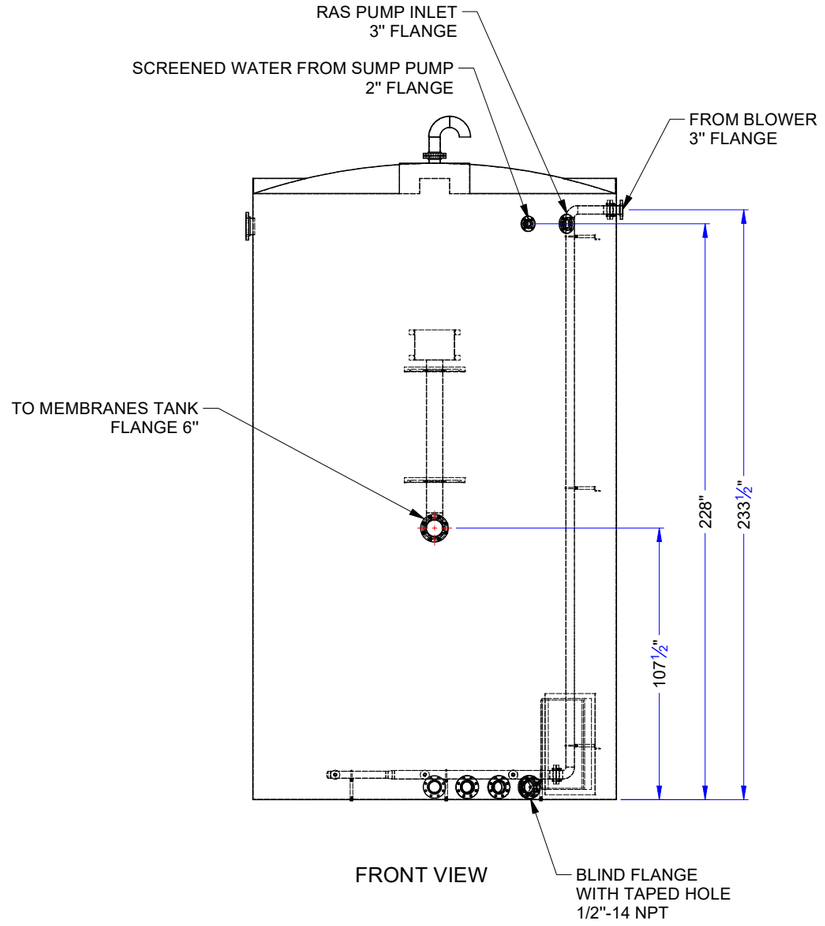

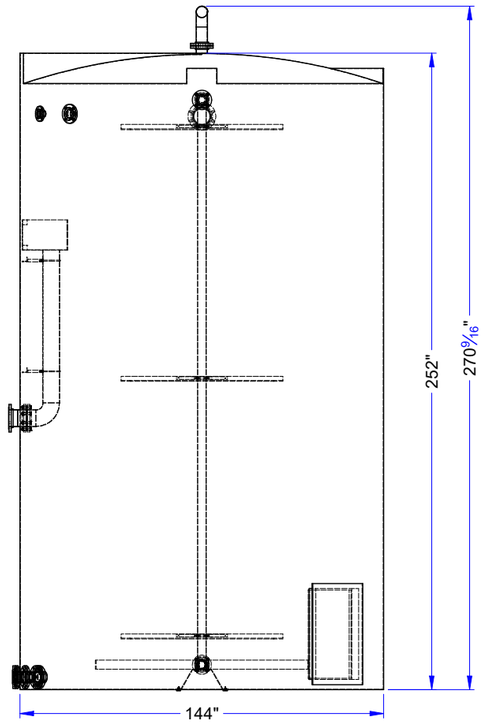

NOTE:
THE INFORMATION, SPECIFICATIONS AND DATA SHOWN ON THIS PRINT ARE FURNISHED BY AND ARE TO REMAIN THE PROPERTY OF H_2O INNOVATION.

THE PURPOSE OF THIS DOCUMENT IS TO FACILITATE THE INSTALLATION, MAINTENANCE AND OPERATION OF THE EQUIPMENT REPRESENTED BY SAID PRINT. NO OTHER USE OF THIS DOCUMENT SHALL BE MADE WITHOUT EXPRESS WRITTEN CONSENT FROM H_2O INNOVATION.

DRAWING REVISION

REV	DATE (DD/MM/YYYY)	REVISION DESCRIPTION	DRAWN	PEER	ENG	APPVD
03	2021-03-02	AS BUILT	Y.D.	R.D.	R.D.	A.M.
02	2020-11-12	AS BUILT	M.C.	R.D.	R.D.	A.M.
01	2020-06-02	REVISED AS PER ENGINEER COMMENTS	M.C.	R.D.	R.D.	A.M.
00	2020-05-21	INITIAL RELEASE	M.C.	R.D.	R.D.	A.M.

h2o innovation
knowledge to share.du savoir à partager

UNLESS NOTED OTHERWISE
INTERPRETATION: ANSI Y14.5
TOLERANCES
FRACTIONS: ±1/64"
DECIMALS 0.X: ±0.030
0.XX: ±0.015
ANGLES: ±0.5°
HOLE SIZES: ±1/64"
HOLE CENTERS: ±1/64"
DO NOT SCALE PRINTS

MELIADINE WW EXPANSION

MELIADINE , NU

TITLE:
WASTE WATER CONTAINER
GENERAL ARRANGEMENT

SCALE:	DRAWING NUMBER:	REVISION
N/A	20C1131-B01-0001 SHEET: 5 OF 5	03

9.3 - EQUIPMENT LIST

PROJECT:	Meliadine Mine WWTP Expansion
PROJECT NUMBER:	20C1131
PROJECT MANAGER:	Alexis Morissette
DOCUMENT NUMBER:	20C1131 C05 0001
REVISION:	0
REVISION DATE:	2020 05 15 (YYYY MM DD)

Full List

Reference	Revision	Tag	Functional Description	Quantity	Model	Manufacturer	Item Description
40	0	N/A	Leak Detector	1	RS 096	Flood Master	FLOODMASTER WATER ALARM WITH ONE WIRED SENSOR PUCK,WITHOUT AC ADAPTOR, RS 096
1	1	P 12300	Sump Booster Pump	1	429A K8 575	Gorman Rupp	AMT SELF PRIMING CENTRIFUGAL PUMP, SS/VITON, INLET/OUTLET CONN 1'' FNPT, 3PH/60HZ/575V TEFC, 1/2HP
U53856 C01 0110							
2	0	T 72100	Aerobic Tank	1	400BBL	Calroc	400BBL Aerobic Tank c/w the following: B condition 400BBL Tank manufactured in 2005 or newer with "L" skid included, 2' x 3' shell manway, and straight ladder with top safety hoop 16 oz Design Pressure, Thief hatch and updated gaugeboard included Nozzle additions as per 20C1131 D01 0720 drawing All stainless steel piping and internals as 20C1131 D01 0720 drawing including Overflow Box Urethane Insulation and Elastomeric sealer as per client request R20 shell and R30 roof and underside of tank Internal coating with Enviroline 2405 as per manufactures recommendation Calroc Standard Tank inspection report including floor UT testing
3	0	FBD 72186	Aerobic Tank Fine Bubble Diffuser	6	#00265	EDI	EDI FLEXAIR FINE BUBBLE AERATOR 40'' LONG, 304SS/PU/PVC/ABS , 3/4 M NPT, 0 27 SCFM #00265
U53856 C01 0720							

PROJECT:	Meliadine Mine WWTP Expansion
PROJECT NUMBER:	20C1131
PROJECT MANAGER:	Alexis Morissette
DOCUMENT NUMBER:	20C1131 C05 0001
REVISION:	0
REVISION DATE:	2020 05 15
	(YYYY MM DD)

Full List

Reference	Revision	Tag	Functional Description	Quantity	Model	Manufacturer	Item Description
4	0		Level Mounting Cable Clamp	3	52006151	Endress Hauser	ENDRESS & HAUSER MOUNTING CLAMP 316L FOR 7.5MM 10.5MM CABLE, #52006151
5	0	F 74000 3	Membrane Tank Main Equipment Cage	1	HSC 450 ES	H2O Innovation	HYDRANAUTICS MEMBRANE CAGE 750 M2, WITH ELEMENT HSE 15, REV #HSC450 ES
6	0	F 74000 3	Membrane Tank Main Equipment	30	HSE 15	Hydranautics	HYDRANAUTIC MEMBRANE HYDRASUB HSE15
7	0	F 74000 3	Membrane Tank Main Equipment	60	HSA 25	Hydranautics	HYDRANAUTIC HYDRASUB CONNECTION TUBE #HSA25
8	0	P 79000 3	MBR Permeate / Process Pumps Main Equipment	1	316A95 575V	Gorman Rupp	GORMAN RUPP AMT316A 95 PUMP, SELF PRIMING, INLET/OUTLET CONN 2'' FNPT, 3PH/60HZ/575V, 3 HP
9	0	P 74600 3	Return Activated Sludge Pumps Main Equipment	1	316A95 575V	Gorman Rupp	GORMAN RUPP AMT316A 95 PUMP, SELF PRIMING, WETTED MATERIAL: CAST IRON, INLET/OUTLET CONN 2'' FNPT, 3PH/60HZ/575V, 3 HP
10	0	UV 91000 3	UV Units Main Equipment	1	1538 068	NEOTECH AQUA	UV WATER PURIFICATION, NEOTECH AQUA D322 1, 185/254NM LAMP, 120VAC, 1PH, 100 GPM #1538 068

PROJECT:	Meliadine Mine WWTP Expansion
PROJECT NUMBER:	20C1131
PROJECT MANAGER:	Alexis Morissette
DOCUMENT NUMBER:	20C1131 C05 0001
REVISION:	0
REVISION DATE:	2020 05 15 (YYYY MM DD)

Full List

Reference	Revision	Tag	Functional Description	Quantity	Model	Manufacturer	Item Description
11	0		UV Transmitter	1	2035 016	NEOTECH AQUA	CONTROLLER CU 11, NEMA 4X, LED DISPLAY, 1 UV UNIT CONTROL, 120 VOLTS. 3 FAULTS RELAY OUTPUT, 1 DIGITAL INPUT (REMOTE START/STOP) AND 1 ANALOGUE OUTPUT (INTENSITY) # 2035 016
12	0	UV 91000 3	UV LIGHT KIT SPARE	3	2164 001	NEOTECH AQUA	LIGHT KIT SPARE, LK 22 IN 22 IN SYSTEM. LP AMALGAM 185/254 nm
13	0	UV 91000 3	UV Units Main Equipment	1	1959	NEOTECH AQUA	BALLAST, ELECTRONIC, 120VAC, 50 60Hz BK 120 4W #1959
U53856 C01 0740							
14	0	F 75340 A/B	Process Aerobic Tank Blower Filter	2	FS 231P 200	FPZ	FPZ AIR FILTER / SILENCER FOR REGENERATIVE BLOWER, CONNEXION 2''MNPT # FS 231P 200
15	0	B 75340 A/B	Process Aerobic Tank Blower	2	K07R MD 7.5HP 3 575	FPZ	REGENERATIVE BLOWER, ALUMINIUM, 2'' NPT CONNECTION, 7.5HP, 575V/3PH/60HZ, #K07R MD 7.5 3 575
16	0	F 75383 A/B	Process Aerobic Tank Blower Flexible	2	HA111 032NE032UK032 0180	HEBDRAULIQUE	FLEXIBLE HOSE SS321, 2''X18'' LENGTH, MNPT X MNPT SWIVEL, 300PSI WOG. HEBDRAULIQUE #HA111 032NE032UK032 0180.
17	0	F 75520	Membrane Tank Blower Filter	1	FS 231P 200	FPZ	FILTRE A AIR / SILENCIEUX POUR SOUFFLANTE FPZ, CONNEXION 2''NPT # FS 231P 200
18	0	B 75500	Membrane Tank Blower	1	K06 MS 5.5 3 575 NP	FPZ	REGENERATIVE BLOWER, WETTED MATERIAL: ALUMINUM, CONNECTION: 2'' NPT, POWER: 5.5HP, 60HZ, 575V, 3 PH #SCL K06 MS 5.5 3 575 NP

PROJECT:	Meliadine Mine WWTP Expansion
PROJECT NUMBER:	20C1131
PROJECT MANAGER:	Alexis Morissette
DOCUMENT NUMBER:	20C1131 C05 0001
REVISION:	0
REVISION DATE:	2020 05 15 (YYYY MM DD)

Full List

Reference	Revision	Tag	Functional Description	Quantity	Model	Manufacturer	Item Description
19	0	F 75583	Membrane Tank Blower Flexible	1	HA111 032NE032UK032 0180	HEBDRAULIQUE	FLEXIBLE HOSE SS321, 2''X18'' LENGTH, MNPT X MNPT SWIVEL, 150PSI VAPEUR/ 300PSI WOG. HEBDRAULIQUE #HA111 032NE032UK032 0180.
U53856 C01 0750							
20	0	P 79700 A/B	Treated Water Distribution Network Main Equipment	2	WS1037B	Goulds	SUMBERSIBLE PUMP GOULDS, 2'' FNPT CONNEXION, 1 HP/575V/60Hz #WS1037B
21	0	T 79300	MBR Permeate Holding Tank Tank	1	RT SPO400UT	Dultmeier	CLOSED TOP TANK, CAPACITY OF 400 US GALLONS (1500 LITRES) 62'' Wx29''Lx66''H, DPE, LIQUID SPECIFIC GRAVITY LESS THAN 1.7. # RTSPO400UT
U53856 C01 0790							
22	0		Pump Cable	2	1001301	Prominent	Control Cable #1001301
23	0		Level switch	2	7142038	Prominent	PROMINENT FLOAT SWITCH 15 FT PE CABLE PVC BODY FOAMED PE CABLE CERAMIC WEIGHT TWO STAGES #7142038
28	0	T 80600	Alkalinity Tank	1	RT SPO400UT	Dultmeier	CLOSED TOP TANK, CAPACITY OF 400 US GALLONS (1500 LITRES) 62'' Wx29''Lx66''H, DPE, LIQUID SPECIFIC GRAVITY LESS THAN 1.7. # RTSPO400UT
29	0	STR 80620	Alkalinity Strainer	1	192.306.300	Georg Fischer	GEORGE FISHER, LINE STRAINER TYPE 306, PVC/EPDM, 20 MESH, 1/2" SPIGOT, #192.306.300
30	0	FQG 80613	AlkalinityCalibration Column	2	PV 2 500	Primary Fluid System	CALIBRATION COLUMN, 500 ML, PVC 1/2'' NPT, # PV 2 500

PROJECT:	Meliadine Mine WWTP Expansion
PROJECT NUMBER:	20C1131
PROJECT MANAGER:	Alexis Morissette
DOCUMENT NUMBER:	20C1131 C05 0001
REVISION:	0
REVISION DATE:	2020 05 15 (YYYY MM DD)

Full List

Reference	Revision	Tag	Functional Description	Quantity	Model	Manufacturer	Item Description
31	0	P 80600 A/B	Alkalinity Dosing Pump	2	GMXa1009NPE2U000UD1130BEN	Prominent	Prominent GMXA Solenoid Diaphragm Metering Pump, 100 230 V, ±10 %, 50/60 Hz, 1/2''OD x 3/8''ID Tubing, Includes Foot Valve, Suction & Discharge Tubing and Injection Valve #GMXa1009NPE2U000UD1130BEN
32	0	N/A	HVAC Material	1	N/A	Soteck	12" X 12" INLET MOTORISED LOUVER WITH ACTUATOR AND LIMIT SWITCHES, 8" X 8" OUTLET GRAVITY LOUVER, VENTILATION FAN WITH SPEED CONTROL, HEATING COIL WITH TEMPERATURE SENSOR, GALVANIZED STEEL CONDUIT WITH TWO GRIDS
33	0	N/A	Baseboard	3	B1002W	Stelpro	STELPRO ELECTRIC BASEBOARD, 1000W, 240VAC/1PH/60HZ, WHITE, B1002W
U53856 C01 0800							
35	0	N/A	Light Fixture	4	BEGBS10048T8232AC120SR	Beghelli	BEGBS10048T8232AC120SR BEGHELLI LUMINAIRE FLUORESCENT ÉTANCHE IP66 2 TUBE FLUORESCENT F32T8 120 VOLTS BS10048T8232AC120SR
36	0	N/A	LED	8	TCPL12T8D5050K	Philips?	TCPL12T8D5050K TUBE DEL T8 4PI 12W 5000K
37	0	N/A	Light Fixture C1D2	1	BEGHZ100T84HT232120	Beghelli	BEGHZ100T84HT232120 LUM FLUO 2XF32T8 120VCLASSE1 DIV2 GROUPE ABCD
38	0	N/A	Emergency Light	1	BRV HZ 6 18 MR16LED 7W	Beghelli	Hazardous Location Class 1 Div 2, NEMA 4X Vandal Resistant Emergency Light LED × 1
39	0	N/A	LED C1D2	8	TCPL12T8D5050K	Philips?	TCPL12T8D5050K TUBE DEL T8 4PI 12W 5000K

PROJECT:	Meliadine Mine WWTP Expansion
PROJECT NUMBER:	20C1131
PROJECT MANAGER:	Alexis Morissette
DOCUMENT NUMBER:	20C1131 C05 0001
REVISION:	0
REVISION DATE:	2020 05 15
	(YYYY MM DD)

Full List

Reference	Revision	Tag	Functional Description	Quantity	Model	Manufacturer	Item Description
34	0	N/A	Thermostat	1	TH305	Aube Technologies	AUBE TECHNOLOGIES NON PROGRAMMABLE THERMOSTAT, 4000W MAX, 230VAC/1PH/60HZ, #TH305
46	0	N/A	Tankless Water Heater	1	ADV65KH	Advantage	ADVANTAGE 6.5KW , 230 VOLTS, POINT OF USE MINI ELECTRIC TANKLESS WATER HEATHER #ADV65KH
47	0	N/A	Anti foaming	1	CLEARFOAM	Cleartech	CLEARFOAM 0232 DEFOAMER 16 KG PAIL CLF023213

9.4 - VALVE LIST

H2O Valve

PROJECT:	Meliadine Mine WWTP Expansion
PROJECT NUMBER:	20C1131
PROJECT MANAGER:	Alexis Morissette
DOCUMENT NUMBER:	20C1131 C20 0001
REVISION:	0
REVISION DATE:	2020 05 20 (YYYY MM DD)

Engineer	Engineer	Engineer	Engineer	Engineer	Engineer	Engineer	Engineer
Reference	**Revision**	**Tag**	**Functional Description**	**Quantity**	**Model**	**Manufacturer**	**Item Description**
1	0	HV 12350	Sump Booster Pump Inlet Isolation Valve	1	21A020EC	Chemline	BALL VALVE CHEMLINE 21 SERIES, PVC, EPDM SEAT, 2'' COMBO THREADED/SOCKET, #21A020EC
2	0	CV 12351	Sump Booster Pump Check Valve	1	129101	Praher	2" WAFER CHECK VALVE, PVC BODY, EPDM O RING SEAL, COMPLETE WITH 316SS SPRING, #129101
3	0	HV 12352	Sump Booster Pump Outlet Throttle Valve	1	CGA015E	Chemline	CHEMLINE GATE VALVE, 1,5", FLANGE ANSI 150#, PVC/EPDM, 150PSI, NSF61 CERTIFIED, #CGA015E
3	0	FV 12352	Sump Booster Pump Outlet Isolation Valve	1	21A015EC/QA1T20	Chemline	UNION BALL VALVE CHEMLINE PVC 1.5" COMBO TYPE 21 EPDM WITH ELECTRIC ACTUATEUR, 120 VOLTS #21A015EC / QA1T020
U65875 C01 0720							
4		IQ 80597	NaOH Chemical Injection Quill	1	Include with dosing pump	Prominent	Include with dosing pump
5	0	HV 72110	DO Inlet Valve	1	NGA005	Chemline	CHEMLINE NEEDLE VALVE NG SERIES, PVC BODY, PTFE SEAL, 1/2'' NPT, #NGA005
6	0	HV 72160	Aerobic Tank Level Transmitter Valve	1	1/2 50M76	Sharpe	SHARPE BALL VALVE, 1 1/2'', SERIES 50M76. # 1 1/2 50M76.
U65875 C01 0740							
7	0	FV 83798	Citric Acid Recovery Clean Pump Undefined	1	453994	Burkert	SOLENOID VALVE BURKERT, NORMALLY CLOSED, 1/2" NPT, PVC WITH EPDM SEAL, 24 VOLTS #0453994
8	0	FV 83698	Sodium Hypo Recovery Clean Pump Undefined	1	453994	Burkert	SOLENOID VALVE BURKERT, NORMALLY CLOSED, 1/2" NPT, PVC WITH EPDM SEAL, 24 VOLTS #0453994
9	0	IQ 83697	Citric Acid Recovery Clean Quill	1	Include with dosing pump	Prominent	NA
10	0	IQ 83797	Sodium Hypo Recovery Clean Quill	1	Include with dosing pump	Prominent	NA
11	0	FV1026	UF / MF Membranes Pressure Relief Valve	1	21A010EC 21010 ER20.12	Chemline	UNION BALL VALVE CHEMLINE PVC 80 1" COMBO TYPE 21 EPDM 21A010EC W/ ER SERIES ELECTRIC ACTUATOR 115 VAC, 21A010EC/21010 ER20.12
12	0	HV 74023	Membrane Tank Air Inlet	1	3 93A66	LVC	LVC FIGURE 93 KNIFE GATE VALVE, 3”, 150 PSI CWP RATING, DESIGN TO ANSI B16.5/150 DRILLING, 316SS CAST BODY/GATE, SS METAL SEAT, TLSP PACKING, HANDWHEEL OPERATOR, 3" 93A66

13	0	FV 74050	Membrane Tank Inlet Isolation Electrical Valve	1	21A030ES/QB1T30	Chemline	UNION BALL VALVE CHEMLINE WITH ELECTRIC ACTUATOR PVC 3" SOCKET TYPE 21 EPDM #21A030ES/QB1T030
14	0	CV 74028	Membrane Tank Overflow Check Valve	1	129104	Praher	4" WAFER CHECK VALVE, PVC BODY, EPDM O RING SEAL, COMPLETE WITH 316SS SPRING, #129104
15	0	FV 79001	Permeat Pump CIP Inlet Electrical Valve	1	21A020EC/QA1T20	Chemline	UNION BALL VALVE CHEMLINE PVC 2" COMBO TYPE 21 EPDM WITH ELECTRIC ACTUATEUR, 120 VOLTS #21A020EC / QA1T020
16	0	FV 79002	Permeat Pump Filtrate CIP Inlet Electrical Valve	1	21A020EC/21010 ER20.12	Chemline	UNION BALL VALVE CHEMLINE PVC 2" COMBO TYPE 21 EPDM W/ ER SERIES ELECTRIC ACTUATOR, 120 VOLTS #21A020EC / 21010 ER20.12
17	0	CV 79051	MBR Permeate / Process Pumps Check Valve	1	129101	Praher	2" WAFER CHECK VALVE, PVC BODY, EPDM O RING SEAL, COMPLETE WITH 316SS SPRING, #129101
18	0	FV 79099	Permeat Pump Outlet to Membrane Electrical Valve	1	21A020EC/21010 ER20.12	Chemline	UNION BALL VALVE CHEMLINE PVC 2" COMBO TYPE 21 EPDM W/ ER SERIES ELECTRIC ACTUATOR, 120 VOLTS #21A020EC / 21010 ER20.12
19	0	FV 79098	Permeat Pump Filtrate Outlet to Electrical Tank Electrical Valve	1	21A020EC/21010 ER20.12	Chemline	UNION BALL VALVE CHEMLINE PVC 2" COMBO TYPE 21 EPDM W/ ER SERIES ELECTRIC ACTUATOR, 120 VOLTS #21A020EC / 21010 ER20.12
20	0	HV 79201	Permeate Commisionning outlet Valve	1	21A015EC	Chemline	BALL VALVE CHEMLINE 21 SERIES, PVC, EPDM SEAT, 1 1/2'' COMBO THREADED/SOCKET, #21A015EC
21	0	HV 79052	Permeate Commisionning outlet UV Valve	1	21A020EC	Chemline	BALL VALVE CHEMLINE 21 SERIES, PVC, EPDM SEAT, 2'' COMBO THREADED/SOCKET, #21A020EC
22	0	HV 74051	Membrane Tank Outlet Valve	1	SV50M76020	Sharpe	SHARPE 50M76 SERIES BALL VALVE, 2”, FNPT END CONNECTIONS, FULL PORT, 2 PCS, 1000 WOG, 316SS BODY/BALL/STEM, RTFE SEAT, LEVER HANDLE
23	0	CV 74651	RAZ Pumps Check Valve	1	129101	Praher	2" WAFER CHECK VALVE, PVC BODY, EPDM O RING SEAL, COMPLETE WITH 316SS SPRING, #129101
24	0	HV 74629	Return Activated Sludge Pumps Sample Valve	1	21A010EC	Chemline	BALL VALVE CHEMLINE 21 SERIES, PVC, EPDM SEAT, 1'' COMBO THREADED/SOCKET, #21A010EC
25	0	HV 74652	Return RAZ To Aerobic Tank Valve	1	21A020EC	Chemline	BALL VALVE CHEMLINE 21 SERIES, PVC, EPDM SEAT, 2'' COMBO THREADED/SOCKET, #21A020EC
26	0	FV 96001	Return RAZ To Sludge Tank Valve	1	21A020EC/21010 ER20.12	Chemline	UNION BALL VALVE CHEMLINE PVC 2" COMBO TYPE 21 EPDM W/ ER SERIES ELECTRIC ACTUATOR, 120 VOLTS #21A020EC / 21010 ER20.12
U65875 C01 0750							
27	0	PSV 75371 A/B	Process Blowers Pressure Release or Safety Valve	2	VRL6	FPZ	BLOWER SAFETY VALVE, 2'' FNPT, LOW PRESSURE/VACUUM, ALUMINUM CAST # VRL6
28	0	CV 75351 A/B	Process Blowers Check Valve	2	CV20	FPZ	BLOWER CHECK VALVE, BRASS, 2'' FNPT # CV20
29	0	HV 75399	Process Blower valve	1	3 93A66	LVC	LVC FIGURE 93 KNIFE GATE VALVE, 3”, 150 PSI CWP RATING, DESIGN TO ANSI B16.5/150 DRILLING, 316SS CAST BODY/GATE, SS METAL SEAT, TLSP PACKING, HANDWHEEL OPERATOR, 3" 93A66
30	0	HV 75359 A/B	Process Blowers System Bypass Valve	2	SV50M76020	Sharpe	SHARPE 50M76 SERIES BALL VALVE, 2”, FNPT END CONNECTIONS, FULL PORT, 2 PCS, 1000 WOG, 316SS BODY/BALL/STEM, RTFE SEAT, LEVER HANDLE
31	0	PSV 75571	Process Blowers Pressure Release or Safety Valve	1	VRL6	FPZ	BLOWER SAFETY VALVE, 2'' FNPT, LOW PRESSURE/VACUUM, ALUMINUM CAST # VRL6
32	0	CV 75551	Process Blowers Check Valve	1	CV20	FPZ	BLOWER CHECK VALVE, BRASS, 2'' FNPT # CV20
33	0	CV 79751 A/B	Permeat Distribution Network Check Valve	2	129101	Praher	2" WAFER CHECK VALVE, PVC BODY, EPDM O RING SEAL, COMPLETE WITH 316SS SPRING, #129101
34	0	HV 79752 A/B	Permeat Distribution Network Isolation Valve	2	21A020EC	Chemline	BALL VALVE CHEMLINE 21 SERIES, PVC, EPDM SEAT, 2'' COMBO THREADED/SOCKET, #21A020EC
35	0	HV 79177	Permeat Sample Valve	1	21A005EC	Chemline	BALL VALVE CHEMLINE 21 SERIES, PVC, EPDM SEAL, 1/2'' COMBO THREADED/SOCKET, #21A005EC

36	0	HV 79389	Permeat Turbidity Meter Inlet	1	NGA005	Chemline	CHEMLINE NEEDLE VALVE NG SERIES, PVC BODY, PTFE SEAL, 1/2'' NPT, #NGA005
37	0	HV 79399	Treated Water Distribution Pumps System Shutoff Valve	1	21A020EC	Chemline	BALL VALVE CHEMLINE 21 SERIES, PVC, EPDM SEAT, 2'' COMBO THREADED/SOCKET, #21A020EC
38	0	CV 79351	Permeat Distribution Network Check Valve	1	129103	Praher	3" WAFER CHECK VALVE, PVC BODY, EPDM O RING SEAL, COMPLETE WITH 316SS SPRING, #129103
39	0	HV 80601	NaOH Tank System Shutoff Valve	1	161.546.342	GF	GF 1/2'', VANNE À BILE TYPE 546, CONNEXION COMBO, PVC/EPDM. #161,546,342
40	0	HV 80629	NaOH Tank Drain Valve	1	LCTHE	Chemline	SAMPLE VALVE STRAITH CHEMLINE, PVC GREY, 1/4 MNPT X TUBING, #LCTHE
41	0	HV 80612	NaOH Tank Calibration Column / Eductor Inlet Valve	1	161.546.342	GF	GF 1/2'', VANNE À BILE TYPE 546, CONNEXION COMBO, PVC/EPDM. #161,546,342
42	0	HV 80615	NaOH Tank Calibration Column / Eductor Outlet or Drain Valve	1	161.546.342	GF	GF 1/2'', VANNE À BILE TYPE 546, CONNEXION COMBO, PVC/EPDM. #161,546,342
43	0	HV 80650 A/B	NaOH Tank Inlet Isolation Valve	2	161.546.342	GF	GF 1/2'', VANNE À BILE TYPE 546, CONNEXION COMBO, PVC/EPDM. #161,546,342
44	0	PSV 80671 A/B	NaOH Tank Pressure Release or Safety Valve	2	SB12A005EU	Chemline	CHEMLINE 1/2'', SB12 SERIES, BACKPRESSURE/PRESSURE RELIEF VALVE. 5 150 PSI, PVC BODY/EPDM SEALS/TRUE UNION SOCKET ENDS; #SB12A005EU
45	0	HV 80652 A/B	NaOH Tank Outlet Isolation Valve	2	161.546.342	GF	GF 1/2'', VANNE À BILE TYPE 546, CONNEXION COMBO, PVC/EPDM. #161,546,342
46	0	HV 80653	NaOH Tank Inlet Isolation Valve	1	161.546.342	GF	GF 1/2'', VANNE À BILE TYPE 546, CONNEXION COMBO, PVC/EPDM. #161,546,342
47	0	PCV 80672	NaOH Tank Pressure Control / Regulating / Reducing Valve	1	SB12A005EU	Chemline	CHEMLINE 1/2'', SB12 SERIES, BACKPRESSURE/PRESSURE RELIEF VALVE. 5 150 PSI, PVC BODY/EPDM SEALS/TRUE UNION SOCKET ENDS; #SB12A005EU
48	0	HV 80699	NaOH Tank Inlet Isolation Valve	1	161.546.342	GF	GF 1/2'', VANNE À BILE TYPE 546, CONNEXION COMBO, PVC/EPDM. #161,546,342

9.5 - INSTRUMENT LIST

H2O

PROJECT NUMBER:	20C1131
PROJECT MANAGER:	Alexis Morissette
DOCUMENT NUMBER:	20C1131-C14-0001
REVISION:	0
REVISION DATE:	5/19/2020 (YYYY-MM-DD)

Engineer	Engineer	Engineer	Engineer	Engineer	Engineer	Engineer	Engineer
Reference	Revision	Tag	Functional Description	Quantity	Model	Manufacturer	Item Description
1	0	PG-12354	Sump Booster Pump Pressure Gauge	1	9106842	Wika	GAUGE WIKA, 233.53 60 PSI, 2.5" DIAL, 1/4" NPT SS, BOTTOM MOUNT, GLYCERINE, # 9106842.
2	0	N/A	Sump Booster Pump Pressure Gauge Isolator	1	SGA005-002PG	Chemline	CHEMLINE 1/4" GAUGE ISOLATOR PVC BODY TEFLON DIAPHGRAM GLYCOL FILLED #SGA005-002PG
2	0	FIT-12374	Sump Booster Pump Flowmeter	1	10D50-4LGA1RA0B5AA	Endress Hauser	ENDRESS & HAUSER PROMAG 10D FLOWMETER, 2'' FLANGE CLASS 150, 24 VDC, WITH 2-LINE PUSH BUTTONS DISPLAY, 4-20 MA HART #10D50-4LGA1RA0B5AA
U65875-C01-0720							
3	0	LT-72160	Aerobic Tank Pressure Transmitter	1	261GSLKBNS1-ED	ABB	PRESSURE GAUGE TRANSMITTER SERIES 2600T, MODEL 261GS, WITH HART 0-250 kPa CONNECTION 1/2" SS316
4	0	AE-72193	Aerobic Bioreactor Tank DO sensor chamber	1	71042404	Endress Hauser	ENDRESS & HAUSER,FLOW THROUGH ARMATURE 316L; Pg13,5, 120m, #71042404
5	0	AE-72193	Aerobic Bioreactor Tank DO sensor	1	COS22D-8A1A2B23	Endress Hauser	ENDRESS HAUSER DISSOLVED OXYGEN SENSOR, SS316, 0-20 MG/L, SUMMERSIBLE PROBE, # COS22D-8A1A2B23
6	0	AE-72193	Aerobic Bioreactor Tank DO Meter Cable	1	CYK10-A201	Endress Hauser	ENDRESS & HAUSER MEMOSENS CABLE 20 METERS #CYK10-A201
7	0	AE-72194	Aerobic Bioreactor Tank PH Meter	1	CPF81D-7LH21	Endress Hauser	ENDRESS & HAUSER DIGITAL PH PROBE, MEMOSENS FUNCTIONALITY, 0-14 (PH), FLAT MEMBRANE, 3/4" MNPT PROCESS CONNECTION, #CPF81D-7LH21
8	0	AE-72194	Aerobic Bioreactor Tank PH Meter Cable	1	CYK10-A201	Endress Hauser	ENDRESS & HAUSER MEMOSENS CABLE 20 METERS #CYK10-A201
9	0	AIT-72194	Aerobic Bioreactor Tank DO & PH Transmitter	1	CM442-CAM2A4F061B+AC	Endress Hauser	ENDRESS & HAUSER, TRANSMITTER MULTIPARAMETER ANALYSIS + MULTIVOICES LIQUILINE CM442, 2X DIGITAL SENSOR INPUT, 4 X 4-20MA OUTPUTS, 24VDC, WALL MOUNTED, #CM442-CAM2A4F061B+AC
U65875-C01-0740							
10	0	LT-74060-3	Membrane Tank Level Transmitter	1	FMX21-CE221HGC10A+PR	Endress Hauser	ENDRESS AND HAUSER LEVEL TRANSMITTER, CSA C1D1, 4-20MA, CABLE MOUNTING SCREW, SCALE 0-100KPA, VITON, 10MCABLE, JUNCTION BOX, #ENDFMX21-CE221HGC10A+PR
11	0	PT-79045-3	MBR Permeate Pumps Pressure Transmitter	1	PMC131-C22E1A3E	Endress Hauser	ENDRESS & HAUSER PRESSURE TRANSMITTER, CERAMIC, EPDM SEALS, MEAS. RANGE: -1/-100...1BAR/0,1MPA GAUGE; SENSOR OVERLOAD LIMIT: 10BAR/1MPA, CSA APPROVED, PN: PMC131-C22E1A3E

12	0	PG-79054-3	MBR Permeate Pumps Pressure Gauge	1	9202833	Wika	GAUGE WIKA, 15 PSI, 2.5" DIAL, ALL STAINLESS, 1/4" NPT BOTTOM CONN., SILICONE FILLED #9202833
13	0	FIT-79074-3	MBR Permeate Pumps Flowmeter	1	10D50-4LGA1RA0B5AA	Endress Hauser	ENDRESS & HAUSER PROMAG 10D FLOWMETER, 2'' FLANGE CLASS 150, 24 VDC, WITH 2-LINE PUSH BUTTONS DISPLAY, 4-20 MA HART #10D50-4LGA1RA0B5AA
14	0	PG-74654-3	Return Activated Sludge Pump Pressure Gauge	1	9202833	Wika	GAUGE WIKA, 15 PSI, 2.5" DIAL, ALL STAINLESS, 1/4" NPT BOTTOM CONN., SILICONE FILLED #9202833
14	0	N/A	Return Activated Sludge Pump Pressure Gauge Isolator	1	SGA005-002PG	Chemline	CHEMLINE 1/4" GAUGE ISOLATOR PVC BODY TEFLON DIAPHGRAM GLYCOL FILLED #SGA005-002PG
15	0	FIT-74674-3	Return Activated Sludge Pumps Flowmeter	1	10D50-4LGA1RA0B5AA	Endress Hauser	ENDRESS & HAUSER PROMAG 10D FLOWMETER, 2'' FLANGE CLASS 150, 24 VDC, WITH 2-LINE PUSH BUTTONS DISPLAY, 4-20 MA HART #10D50-4LGA1RA0B5AA
U65875-C01-0750							
16	0	PG-75354 A/B	Process Blowers Pressure Gauge	2	9202833	Wika	GAUGE WIKA, 15 PSI, 2.5" DIAL, ALL STAINLESS, 1/4" NPT BOTTOM CONN., SILICONE FILLED #9202833
17	0	FIT-75374	Process Blowers Flow Sensor	1	SD0523	IFM	COMPRESSED AIR FLOWMETER, ANALOG OUTPUT, NUMERIC DISPLAY, ON PIPING PROCESS CONNECTION. # SD0523
18	0	FIT-75374	Process Blowers Flow Sensor Adaptor	1	E40195	IFM	IFM COMPRESSED AIR FLOWMETER PROCESS CONNECTION FITING G1 TO WELDING PIPE, SS316L. # E40195
19	0	PG-75554	Membrane Blowers Pressure Gauge	1	9202833	Wika	GAUGE WIKA, 15 PSI, 2.5" DIAL, ALL STAINLESS, 1/4" NPT BOTTOM CONN., SILICONE FILLED #9202833
20	0	FIT-75574	Membrane Blowers Flow Sensor	1	SD0523	IFM	COMPRESSED AIR FLOWMETER, ANALOG OUTPUT, NUMERIC DISPLAY, ON PIPING PROCESS CONNECTION. # SD0523
21	0	FIT-75574	Membrane Blowers Flow Sensor Adaptor	1	E40195	IFM	IFM COMPRESSED AIR FLOWMETER PROCESS CONNECTION FITING G1 TO WELDING PIPE, SS316L. # E40195
22	0	NA	Air Flow Sensor Cable	2	EVC003	IFM	CONTROL CABLE , CONNECTION M12, 10 METERS. # EVC003
U65875-C01-0790							
23	0	LT-79160	MBR Permeate Tank Level Transmitter	1	FMX21-CD221GGC10A+PR	Endress Hauser	ENDRESS AND HAUSER LEVEL TRANSMITTER, 4-20MA, CABLE MOUNTING SCREW, SCALE 0-60KPA, VITON, 10MCABLE, JUNCTION BOX, #ENDFMX21-CD221GGC10A+PR
24	0	AE-79193	UV Units PH-Meter	1	CPF81D-7LH21	Endress Hauser	ENDRESS & HAUSER DIGITAL PH PROBE, MEMOSENS FUNCTIONALITY, 0-14 (PH), FLAT MEMBRANE, 3/4" MNPT PROCESS CONNECTION, #CPF81D-7LH21
25	0	AE-79193	UV Units PH-Meter Cable	1	CYK10-S101	Endress Hauser	MEMOSENS SENSORS CABLE, 33 FEET, CSA, ENDRESS AND HAUSER #CYK10-S101
26	0	AIT-79193	UV Units PH Transmitter	1	CM442-CAM1A1F061B+AC	Endress Hauser	ENDRESS & HAUSER, TRANSMITTER MULTIPARAMETER ANALYSIS. LIQUILINE CM442, 24 VOLTS, 1 SENSOR, 2 ANALOGUE OUTPUT #CM442-CAM1A2F061B+AC
27	0	AE-79189/ AIT-79189	UV Units Turbidity Meter with Transmitter	1	4690/11111231	ABB	ABB TURBIDIMETER ,LOW CONCENTRATION, WITH DISPLAY, 0-40 NTU, LCD LIGHT, 115 VAC, 10 METERS CABLE, WITH CALIBRATION BLOCK. PN: 4690_11111231_STD.
28	0	PG-79354	UV Units Pressure Gauge	1	9106842	Wika	GAUGE WIKA, 233.53 60 PSI, 2.5" DIAL, 1/4" NPT SS, BOTTOM MOUNT, GLYCERINE, # 9106842.
29	0	FIT-79374	UV Units Flowmeter	1	10D50-4LGA1RA0B5AA	Endress Hauser	ENDRESS & HAUSER PROMAG 10D FLOWMETER, 2'' FLANGE CLASS 150, 24 VDC, WITH 2-LINE PUSH BUTTONS DISPLAY, 4-20 MA HART #10D50-4LGA1RA0B5AA
U65875-C01-0800							
30	0	LSLL-83666	Hypochlorite Tank Level Switch	1		Supplied with pump	

31	0	PG-83654	Hypochlorite Tank Pressure Gauge	1	SGA005002PG-P025-60SS	Chemline	CHEMLINE SG SERIES GAUGE ISOLATOR AND PRESSURE GAUGE MOUNTED, PVC BOTTOM, TEFLON DIAPHRAGM, 1/2" CONNECTIONS, GLYCERINE FILLED, WITH PRESSURE GAUGE 0-60 PSI P025-60-SS (0-10 BAR), PN SGA005002PG-P02560SS
32	0	LSLL-80666 A/B	Alkalinity Tank Level Switch	1		Supplied with pump	
33	0	PG-80654	Alkalinity Tank Pressure Gauge	1	SGA005002PG-P025-60SS	Chemline	CHEMLINE SG SERIES GAUGE ISOLATOR AND PRESSURE GAUGE MOUNTED, PVC BOTTOM, TEFLON DIAPHRAGM, 1/2" CONNECTIONS, GLYCERINE FILLED, WITH PRESSURE GAUGE 0-60 PSI P025-60-SS (0-10 BAR), PN SGA005002PG-P02560SS
34	0	AE-74153-1	Methane Detector	1	6005B	Opera	OPERA GAS DETECTOR, METHANE, 50 % LEL, 2 RELAYS, 24VAC, 60HZ #6005B
35	0	AE-74153-2	H2S Detector	1	6016B	Opera	OPERA GAS DETECTOR, H2S, 50 PPM, 2 RELAYS, 24VAC, 60HZ #6016B

9.6 - ELECTRICAL SPARE PARTS LIST

PROJECT: Méliadine WW Expansion
PROJECT NUMBER: 20C1131
PROJECT MANAGER: Alexis Morissette
DOCUMENT NUMBER 20C1131 J02 0001
REVISION: 0
REVISION DATE: 2020 11 30

SPARE PARTS LIST

Revision	Critical Spare	Recommended Spare	Section	Description	Manufacturer	Part number	Spare quantity	Unit price (CAD)	Critical Spare	Recommended Spare
0	X		ÉLECTRIQUE	AJUSTABLE FREQUENCY AC DRIVE, 600VAC, 3HP, IP20	ABB	ACS255 03U 04A1 6	1	$ 936.00	**$ 936.00**	$ -
0	X		ÉLECTRIQUE	AJUSTABLE FREQUENCY AC DRIVE, 600VAC, 1HP, IP20	ABB	ACS255 03U 02A1 6	1	$ 742.73	**$ 742.73**	$ -
0		X	ÉLECTRIQUE	PANEL MOUNT REMOTE KEYPAD FOR ACS255 DRIVES	ABB	RCRP 02	1	$ 126.45	$ -	**$ 126.45**
0		X	ÉLECTRIQUE	DUPLEX 120V, 15A, DIN RAIL MOUNTING	ALLEN BRADLEY	1492 REC15	1	$ 36.75	$ -	**$ 36.75**
0	X		ÉLECTRIQUE	HIGH SPEED FUSE CLASS J 6A	BUSSMANN	DFJ6	3	$ 39.09	**$ 39.09**	$ -
0	X		ÉLECTRIQUE	HIGH SPEED FUSE CLASS J 10A	BUSSMANN	DFJ10	3	$ 16.15	**$ 16.15**	$ -
0	X		ÉLECTRIQUE	TIME DELAY FUSE CLASS CC 3A	BUSSMANN	LP CC 3	3	$ 7.11	**$ 7.11**	$ -
0	X		ÉLECTRIQUE	TIME DELAY FUSE CLASS CC 20A	BUSSMANN	LP CC 20	3	$ 7.11	**$ 7.11**	$ -
0		X	ÉLECTRIQUE	FIBERGLASS EXPLOSION PROOF NON FUSED DISCONNECT SWITCH, 20A, 3POLE, CLASS 1 DIVISION 1	CROUSE HINDS	GHG 262 2301 L0003	1	$ 978.07	$ -	**$ 978.07**
0	X		ÉLECTRIQUE	TIME DELAY FUSE CLASS J 60A	EDISON	JDL60	2	$ 13.84	**$ 13.84**	$ -
0	X		ÉLECTRIQUE	TIME DELAY FUSE CLASS J 125A	EDISON	JDL125	3	$ 47.51	**$ 47.51**	$ -
0	X		ÉLECTRIQUE	GGM GLASS FUSE 0,5A	FERRAZ	GGM1/2	5	$ 0.73	**$ 0.73**	$ -
0	X		ÉLECTRIQUE	GGM GLASS FUSE 2A	FERRAZ	GGM2	20	$ 0.60	**$ 0.60**	$ -
0	X		ÉLECTRIQUE	GGM GLASS FUSE 4A	FERRAZ	GGM4	5	$ 0.60	**$ 0.60**	$ -
0	X		ÉLECTRIQUE	GGM GLASS FUSE 6A	FERRAZ	GGM6	5	$ 0.60	**$ 0.60**	$ -
0		X	ÉLECTRIQUE	DOOR ACTIVATED SWITCH	HOFFMAN	ALFSWD	1	$ 22.91	$ -	**$ 22.91**
0	X		ÉLECTRIQUE	TRANSFORMER 120 240VAC TO 12 24VAC, 50VA	HPS	SP50PR	1	$ 58.40	**$ 58.40**	$ -
0	X		ÉLECTRIQUE	POWER SUPPLY, 100 240VAC / 24VDC, 10A	OMRON	S8VK C24024	1	$ 127.18	**$ 127.18**	$ -
0	X		ÉLECTRIQUE	TRANSFORMER 600/120 240VAC, 1PH, TYPE 3R, 25KVA	REX	SA25JKE3RZ3	1	$ 2,026.36	**$ 2,026.36**	$ -
0	X		ÉLECTRIQUE	M340 8 CHANNEL ISOLATED ANALOG INPUT MODULE	SCHNEIDER	BMXAMI0810	1	$ 1,769.42	**$ 1,769.42**	$ -
0	X		ÉLECTRIQUE	M340 4 CHANNEL ANALOG OUTPUT MODULE	SCHNEIDER	BMXAMO0410	1	$ 1,462.29	**$ 1,462.29**	$ -
0	X		ÉLECTRIQUE	PLC MODICON M340 POWER SUPPLY MODULE, 100 240 VAC	SCHNEIDER	BMXCPS3500	1	$ 1,065.02	**$ 1,065.02**	$ -
0	X		ÉLECTRIQUE	M340 DISCRETE INPUT MODULE, 32 INPUTS, 24VDC	SCHNEIDER	BMXDDI3202K	1	$ 869.44	**$ 869.44**	$ -
0	X		ÉLECTRIQUE	M340 DISCRETE OUTPUT MODULE, 32 OUTPUTS, 24VDC	SCHNEIDER	BMXDDO3202K	1	$ 869.44	**$ 869.44**	$ -
0	X		ÉLECTRIQUE	PERIPHERAL REMOTE IO ADAPTER, CONTROLLER, ETHERNET	SCHNEIDER	BMXPRA0100	1	$ 1,761.78	**$ 1,761.78**	$ -
0	X		ÉLECTRIQUE	M340 PLC RACK, 8 SLOTS	SCHNEIDER	BMXXBP0800	1	$ 348.38	**$ 348.38**	$ -
0	X		ÉLECTRIQUE	MINI, K, CONTROL RELAY, 2NO/2NC CONTACTS, 120VAC	SCHNEIDER	CA2KN22G7	1	$ 46.51	**$ 46.51**	$ -
0		X	ÉLECTRIQUE	GS2 PADLOCKABLE HANDLE NEMA 4X RED/YELLOW, 100 400A	SCHNEIDER	GS2AH440	1	$ 68.29	$ -	**$ 68.29**
0	X		ÉLECTRIQUE	GS2 FUSE DISCONNECT SWITCH, 200A, FUSE TYPE J, 3POLE	SCHNEIDER	GS2MU3N	1	$ 600.76	**$ 600.76**	$ -
0	X		ÉLECTRIQUE	MOTOR PROTECTION CIRCUIT BREAKER, STANDARD MAGNETIC TRIP, GV2, 1 1.6A	SCHNEIDER	GV2P06	1	$ 94.09	**$ 94.09**	$ -
0	X		ÉLECTRIQUE	MOTOR PROTECTION CIRCUIT BREAKER, STANDARD MAGNETIC TRIP, GV2, 2.5 4A	SCHNEIDER	GV2P08	1	$ 94.09	**$ 94.09**	$ -
0	X		ÉLECTRIQUE	MOTOR PROTECTION CIRCUIT BREAKER, STANDARD MAGNETIC TRIP, GV2, 4 6.3A	SCHNEIDER	GV2P10	1	$ 97.47	**$ 97.47**	$ -
0	X		ÉLECTRIQUE	MOTOR PROTECTION CIRCUIT BREAKER, STANDARD MAGNETIC TRIP, GV2, 6 10A	SCHNEIDER	GV2P14	1	$ 103.80	**$ 103.80**	$ -
0	X		ÉLECTRIQUE	FRONT MOUNTED AUXILIARY CONTACT 1N.O 1N.C.	SCHNEIDER	GVAE11	2	$ 17.62	**$ 17.62**	$ -
0	X		ÉLECTRIQUE	FRONT MOUNTED AUXILIARY CONTACTS FOR K RELAY	SCHNEIDER	LA1KN40	1	$ 13.78	**$ 13.78**	$ -
0	X		ÉLECTRIQUE	TESYS CONTACTOR, LC1D, 3 POLE, 9A, 1 N.O. 1 N.C. AUXILIARY CONTACT	SCHNEIDER	LC1D09G7	2	$ 53.58	**$ 53.58**	$ -
0	X		ÉLECTRIQUE	1 POLE THERMAL MAGNETIC CIRCUIT BREAKER, TRIP CURVE C, 15A	SCHNEIDER	M9F42115	2	$ 29.96	**$ 29.96**	$ -
0	X		ÉLECTRIQUE	2 POLE THERMAL MAGNETIC CIRCUIT BREAKER, TRIP CURVE C, 1A	SCHNEIDER	M9F42201	1	$ 74.04	**$ 74.04**	$ -
0	X		ÉLECTRIQUE	2 POLE THERMAL MAGNETIC CIRCUIT BREAKER, TRIP CURVE C, 1A	SCHNEIDER	M9F42201	1	$ 70.62	**$ 70.62**	$ -
0	X		ÉLECTRIQUE	2 POLE THERMAL MAGNETIC CIRCUIT BREAKER, TRIP CURVE C, 20A	SCHNEIDER	M9F42220	1	$ 64.91	**$ 64.91**	$ -
0	X		ÉLECTRIQUE	2 POLE THERMAL MAGNETIC CIRCUIT BREAKER, TRIP CURVE C, 30A	SCHNEIDER	M9F42230	1	$ 64.91	**$ 64.91**	$ -
0	X		ÉLECTRIQUE	1 POLE THERMAL MAGNETIC CIRCUIT BREAKER, TRIP CURVE D, 1A	SCHNEIDER	M9F43101	1	$ 32.82	**$ 32.82**	$ -
0	X		ÉLECTRIQUE	1 POLE THERMAL MAGNETIC CIRCUIT BREAKER, 1A, TRIP CURVE D	SCHNEIDER	M9F43101	1	$ 32.82	**$ 32.82**	$ -
0	X		ÉLECTRIQUE	1 POLE THERMAL MAGNETIC CIRCUIT BREAKER, TRIP CURVE D, 4A	SCHNEIDER	M9F43104	1	$ 32.82	**$ 32.82**	$ -
0	X		ÉLECTRIQUE	SAFETY MONITORING RELAY, DUAL CHANNEL, 24VAC/DC	SCHNEIDER	XPSUAF13AP	1	$ 221.67	**$ 221.67**	$ -
0	X		ÉLECTRIQUE	NON ILLUMINATED PUSH BUTTON, PLASTIC, MOMENTARY, BLACK/RED/BLUE/GREEN	SCHNEIDER	ZB5AA9	1	$ 5.13	**$ 5.13**	$ -
0	X		ÉLECTRIQUE	E STOP ILLUMINATED PUSH BUTTON MUSHROOM (TWIST TO RELEASE)	SCHNEIDER	ZB5AW743	1	$ 46.89	**$ 46.89**	$ -
0	X		ÉLECTRIQUE	PLASTIC MOUNTING LATCH	SCHNEIDER	ZB5AZ009	1	$ 2.13	**$ 2.13**	$ -
0	X		ÉLECTRIQUE	CONTACT BLOCK N.O.	SCHNEIDER	ZBE101	1	$ 6.38	**$ 6.38**	$ -
0		X	ÉLECTRIQUE	INTEGRATED LED MODULE, WHITE, SCREW TYPE, 24VAC/DC (SOLD IN MULTIPLE OF 5x)	SCHNEIDER	ZBVB1	5	$ 19.11	$ -	**$ 19.11**
0		X	ÉLECTRIQUE	LED LIGHT BAR 14 INCHES, 24VDC, 5 WATTS, 400 LUMENS	STEGO	02540.1 11	1	$ 135.82	$ -	**$ 135.82**
0	X		ÉLECTRIQUE	DOUBLE DECK FUSE DISCONNECT TERMINAL BLOCK; FOR 5 x 20 mm FUSE; 12 … 30V; WITH BLOWN FUSE INDICATION BY LED 6	WAGO	2002 2611/1000 541	5	$ 21.73	**$ 21.73**	$ -
0	X		ÉLECTRIQUE	DOUBLE DECK FUSE DISCONNECT TERMINAL BLOCK; FOR 5 x 20 mm FUSE; 120V; WITH BLOWN FUSE INDICATION BY LED 6.3 A	WAGO	2002 2611/1000 867	5	$ 19.91	**$ 19.91**	$ -
0	X		ÉLECTRIQUE	TERMINAL BLOCK RELAY, SPRING CLAMP, 24VDC	WAGO	857 304	5	$ 18.40	**$ 18.40**	$ -
0	X		ÉLECTRIQUE	TERMINAL BLOCK RELAY, SPRING CLAMP, 120VAC	WAGO	857 357	1	$ 19.55	**$ 19.55**	$ -
0	X		ÉLECTRIQUE	PLUG IN TYPE RELAY, DPDT, 120VAC, TERMINAL BASE INCLUDED	WAGO	788 515	2	$ 23.55	**$ 23.55**	$ -
									$ 13,921.16	**$ 1,232.47**

9.7 - MECHANICAL SPARE PARTS LIST

PLACEHOLDER - TO BE ADDED

9.8 - ELECTRICAL SCHEMATICS

MELIADINE STP EXPANSION

CONTAINERIZED SEWAGE TREATMENT PLANT

C03 ELECTRICAL SCHEMATICS

NOTE:

THE INFORMATION, SPECIFICATIONS AND DATA SHOWN ON THIS PRINT ARE FURNISHED BY AND ARE TO REMAIN THE PROPERTY OF H $_2$O INNOVATION.

THE PURPOSE OF THIS DOCUMENT IS TO FACILITATE THE INSTALLATION, MAINTENANCE AND OPERATION OF THE EQUIPMENT REPRESENTED BY SAID PRINT. NO OTHER USE OF THIS DOCUMENT SHALL BE MADE WITHOUT EXPRESS WRITTEN CONSENT FROM H_2O INNOVATION.

NO.	DATE	REVISION	DWN BY	ENGINEER	CHK'D BY
.00	22/07/2020	AS-BUILT	P.L.D.		

h2o innovation
knowledge to share.du savoir à partager.

DWG TITLE

MELIADINE STP EXPANSION
CONTAINERIZED SEWAGE
TREATMENT PLANT
ELECTRICAL DRAWINGS

TITLE

JOB NO
20C1131

DWG NO
20C1131-C03-TITLE

SHEET NO	REVISION
1 OF 19	.00

DRAWING #	DESCRIPTION 1	DESCRIPTION 2	DESCRIPTION 3	PAGE
20C1131-C03-TITLE		TITLE		1
20C1131-C03-INDEX		INDEX		2
20C1131-C03-LEGEND		LEGEND		3
20C1131-C03-PP103-600V-01	PP-103	POWER PANEL	600VAC DISTRIBUTION	4
20C1131-C03-PP103-600V-02	PP-103	POWER PANEL	600VAC DISTRIBUTION	5
20C1131-C03-PP103-BLANK	PP-103	POWER PANEL	BLANK PAGE	6
20C1131-C03-PP103-120V-01	PP-103	POWER PANEL	120/240V DISTRIBUTION	7
20C1131-C03-RIO103-120V	RIO-103	REMOTE I/O PANEL	120/24VAC DISTRIBUTION	8
20C1131-C03-RIO103-24V	RIO-103	REMOTE I/O PANEL	24VDC DISTRIBUTION	9
20C1131-C03-RIO103-DI-01	RIO-103	REMOTE I/O PANEL	DIGITAL INPUT	10
20C1131-C03-RIO103-DO-01	RIO-103	REMOTE I/O PANEL	DIGITAL OUTPUT	11
20C1131-C03-RIO103-DO-02	RIO-103	REMOTE I/O PANEL	DIGITAL OUTPUT	12
20C1131-C03-RIO103-AI-01	RIO-103	REMOTE I/O PANEL	ANALOG INPUT	13
20C1131-C03-RIO103-AI-02	RIO-103	REMOTE I/O PANEL	ANALOG INPUT	14
20C1131-C03-RIO103-AI-03	RIO-103	REMOTE I/O PANEL	ANALOG INPUT	15
20C1131-C03-RIO103-AO-01	RIO-103	REMOTE I/O PANEL	ANALOG OUTPUT	16
20C1131-C03-RIO103-DOSING	JB-0800	DOSING PUMPS	JUNCTION BOX	17
20C1131-C03-RIO103-ES	RIO-103	REMOTE I/O PANEL	EMERGENCY STOP	18
20C1131-C03-RIO103-BLANK	RIO-103	REMOTE I/O PANEL	BLANK PAGE	19

NOTE:

THE INFORMATION, SPECIFICATIONS AND DATA SHOWN ON THIS PRINT ARE FURNISHED BY AND ARE TO REMAIN THE PROPERTY OF H_2O INNOVATION.

THE PURPOSE OF THIS DOCUMENT IS TO FACILITATE THE INSTALLATION, MAINTENANCE AND OPERATION OF THE EQUIPMENT REPRESENTED BY SAID PRINT. NO OTHER USE OF THIS DOCUMENT SHALL BE MADE WITHOUT EXPRESS WRITTEN CONSENT FROM H_2O INNOVATION.

NO.	DATE	REVISION	DWN BY	ENGINEER	CHK'D BY
.00	22/07/2020	AS-BUILT	P.L.D.		

DWG TITLE

MELIADINE STP EXPANSION
CONTAINERIZED SEWAGE
TREATMENT PLANT
ELECTRICAL DRAWINGS

INDEX

JOB NO 20C1131

DWG NO 20C1131-C03-INDEX

SHEET NO 2 OF 19

REVISION .00

WIRE & CONNECTION

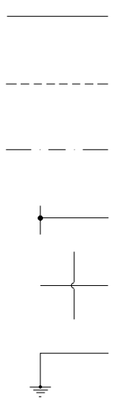

WIRE-INTERNAL TO PANEL

WIRE-EXTERNAL TO PANEL (CONTAINER WIRING)

WIRE-EXTERNAL TO PANEL (FIELD WIRING)

INTERSECTING WIRES JOINING

INTERSECTING WIRES NOT JOINING

CONNECTION TO GROUNG

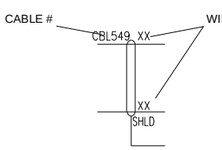

PAIR SHIELD CABLE

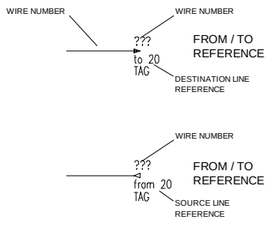

FROM / TO REFERENCE

FROM / TO REFERENCE

CONTROL SWITCH

PUSH BUTTON

DOOR SWITCH NORMALLY CLOSE

TERMINAL BLOCK

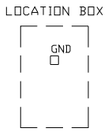

LOCATION BOX WITH TERMINAL BLOCK

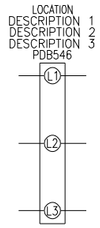

THREE POLE POWER DISTRIBUTION BLOCK

GROUND LUG

RECEPTACLE

PLUG

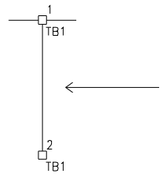

TERMINAL BLOCK

TERMINAL JUMPER

CIRCUIT PROTECTION

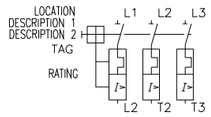

MANUAL MOTOR STARTER

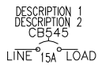

CIRCUIT BREAKER

FUSE SWITCH TERMINAL

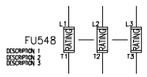

THREE POLE POWER FUSE

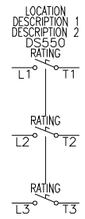

THREE POLE DISCONNECT SWITCH

MISC ACCESSORY

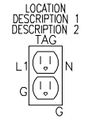

120VAC OUTLET

LED LIGHT

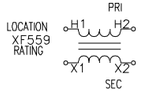

CONTROL TRANSFORMER

COIL RELAY OR CONTACTOR

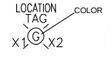

PILOT LIGHT

CONTROL CONTACT

NORMALLY OPEN LEVEL SWITCH

NORMALLY CLOSED TEMPERATURE SWITCH

NORMALLY OPEN CONTACT RELAY

NORMALLY CLOSED CONTACT RELAY

WIRE COLOR

24 VDC (+) = BLUE
24 VDC (-) = WHITE/BLUE
120 VAC = BLACK
240VAC = RED
NEUTRAL = WHITE
GROUND = GREEN
ANALOG SIGNAL = +WHITE / -BLACK

NOTE:

THE INFORMATION, SPECIFICATIONS AND DATA SHOWN ON THIS PRINT ARE FURNISHED BY AND ARE TO REMAIN THE PROPERTY OF H_2O INNOVATION.

THE PURPOSE OF THIS DOCUMENT IS TO FACILITATE THE INSTALLATION, MAINTENANCE AND OPERATION OF THE EQUIPMENT REPRESENTED BY SAID PRINT. NO OTHER USE OF THIS DOCUMENT SHALL BE MADE WITHOUT EXPRESS WRITTEN CONSENT FROM H_2O INNOVATION.

NO.	DATE	REVISION	DWN BY	ENGINEER	CHK'D BY
.00	22/07/2020	AS-BUILT	P.L.D.		

h2o innovation
knowledge to the world sauvons l'eau

DWG TITLE
MELIADINE STP EXPANSION CONTAINERIZED SEWAGE TREATMENT PLANT ELECTRICAL DRAWINGS

LEGEND

JOB NO
20C1131

DWG NO
20C1131-C03-LEGEND

SHEET NO
3 OF 19

REVISION
.00

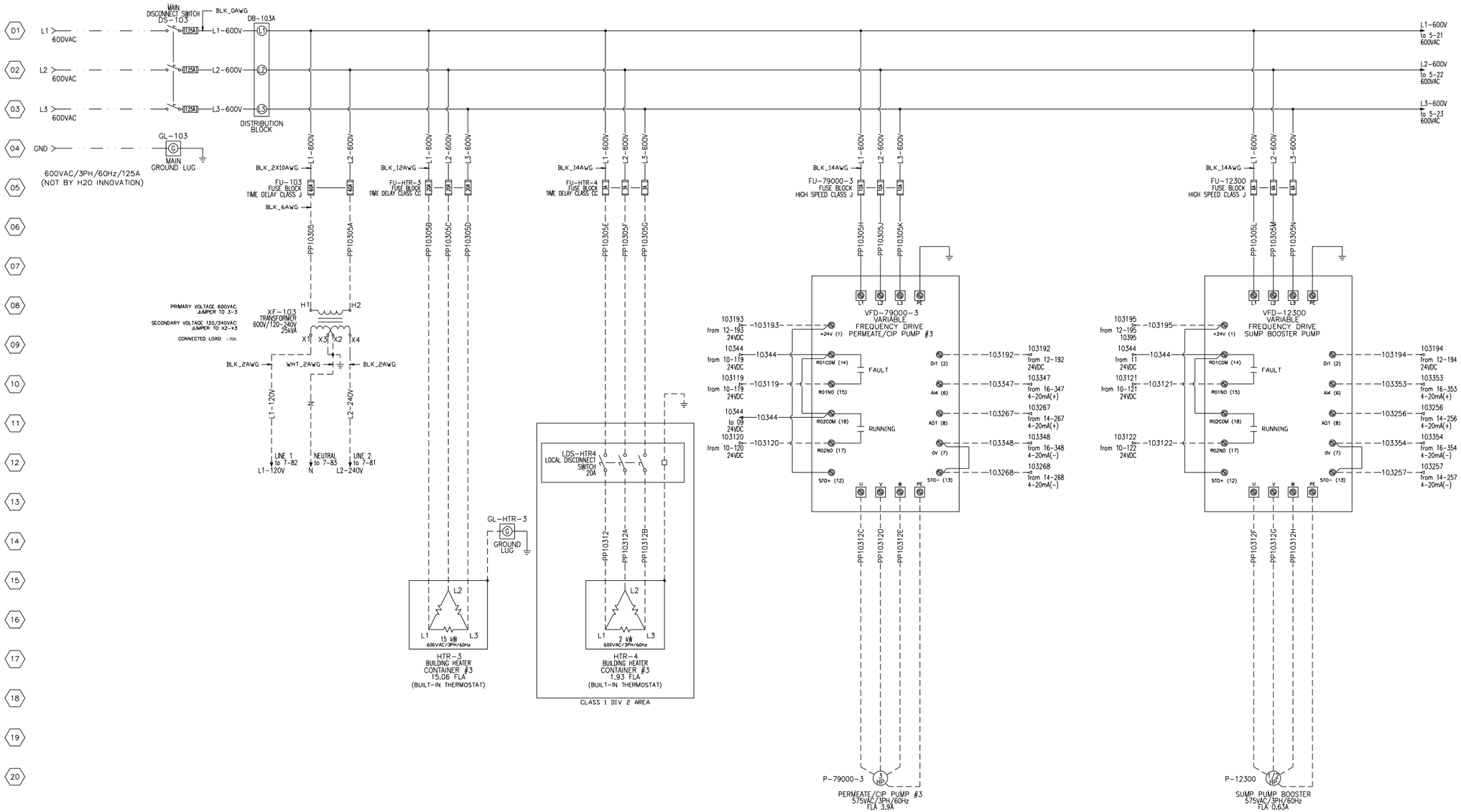

NOTE:

THE INFORMATION, SPECIFICATIONS AND DATA SHOWN ON THIS PRINT ARE FURNISHED BY AND ARE TO REMAIN THE PROPERTY OF H_2O INNOVATION.

THE PURPOSE OF THIS DOCUMENT IS TO FACILITATE THE INSTALLATION, MAINTENANCE AND OPERATION OF THE EQUIPMENT REPRESENTED BY SAID PRINT. NO OTHER USE OF THIS DOCUMENT SHALL BE MADE WITHOUT EXPRESS WRITTEN CONSENT FROM H_2O INNOVATION.

NO.	DATE	REVISION	DWN BY	P.L.D.	ENGINEER	CHK'D BY
.00	22/07/2020	AS-BUILT				

h2o innovation
knowledge to share all around the globe

DWG TITLE

MELIADINE STP EXPANSION
CONTAINERIZED SEWAGE
TREATMENT PLANT
ELECTRICAL DRAWINGS

PP-103
POWER PANEL
600VAC DISTRIBUTION

JOB NO	
20C1131	
DWG NO	
20C1131-C03-PP103-600V-01	
SHEET NO	REVISION
4 OF 19	.00

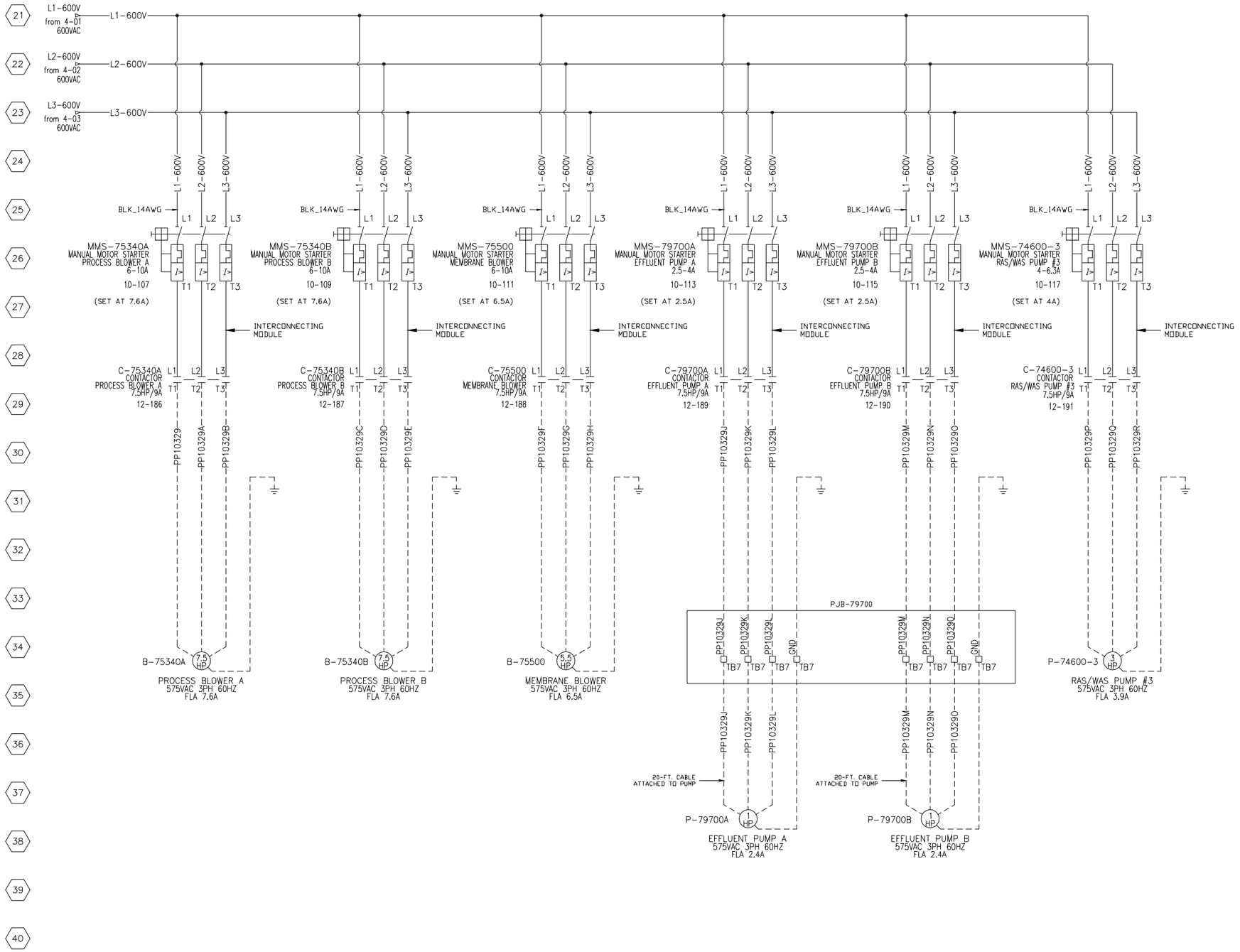

NOTE:

THE INFORMATION, SPECIFICATIONS AND DATA SHOWN ON THIS PRINT ARE FURNISHED BY AND ARE TO REMAIN THE PROPERTY OF H_2O INNOVATION.

THE PURPOSE OF THIS DOCUMENT IS TO FACILITATE THE INSTALLATION, MAINTENANCE AND OPERATION OF THE EQUIPMENT REPRESENTED BY SAID PRINT. NO OTHER USE OF THIS DOCUMENT SHALL BE MADE WITHOUT EXPRESS WRITTEN CONSENT FROM H_2O INNOVATION.

NO.	DATE	REVISION	DWN BY	ENGINEER	CHK'D BY
.00	22/07/2020	AS-BUILT	P.L.D.		

h2o innovation
knowledge to share and sound partner

DWG TITLE
MELIADINE STP EXPANSION
CONTAINERIZED SEWAGE
TREATMENT PLANT
ELECTRICAL DRAWINGS

PP-103
POWER PANEL
600VAC DISTRIBUTION

JOB NO
20C1131

DWG NO
20C1131-C03-PP103-600V-02

SHEET NO
5 OF 19

REVISION
.00

INTENTIONALLY LEFT BLANK

INTENTIONALLY LEFT BLANK

NOTE:

THE INFORMATION, SPECIFICATIONS AND DATA SHOWN ON THIS PRINT ARE FURNISHED BY AND ARE TO REMAIN THE PROPERTY OF H_2O INNOVATION.

THE PURPOSE OF THIS DOCUMENT IS TO FACILITATE THE INSTALLATION, MAINTENANCE AND OPERATION OF THE EQUIPMENT REPRESENTED BY SAID PRINT. NO OTHER USE OF THIS DOCUMENT SHALL BE MADE WITHOUT EXPRESS WRITTEN CONSENT FROM H_2O INNOVATION.

NO.	DATE	REVISION	DWN BY	ENGINEER	CHK'D BY
.00	22/07/2020	AS-BUILT	P.L.D.		

DWG TITLE

MELIADINE STP EXPANSION
CONTAINERIZED SEWAGE
TREATMENT PLANT
ELECTRICAL DRAWINGS

PP-103
POWER PANEL
BLANK PAGE

JOB NO
20C1131

DWG NO
20C1131-C03-PP103-BLANK

SHEET NO
6 OF 19

REVISION
.00

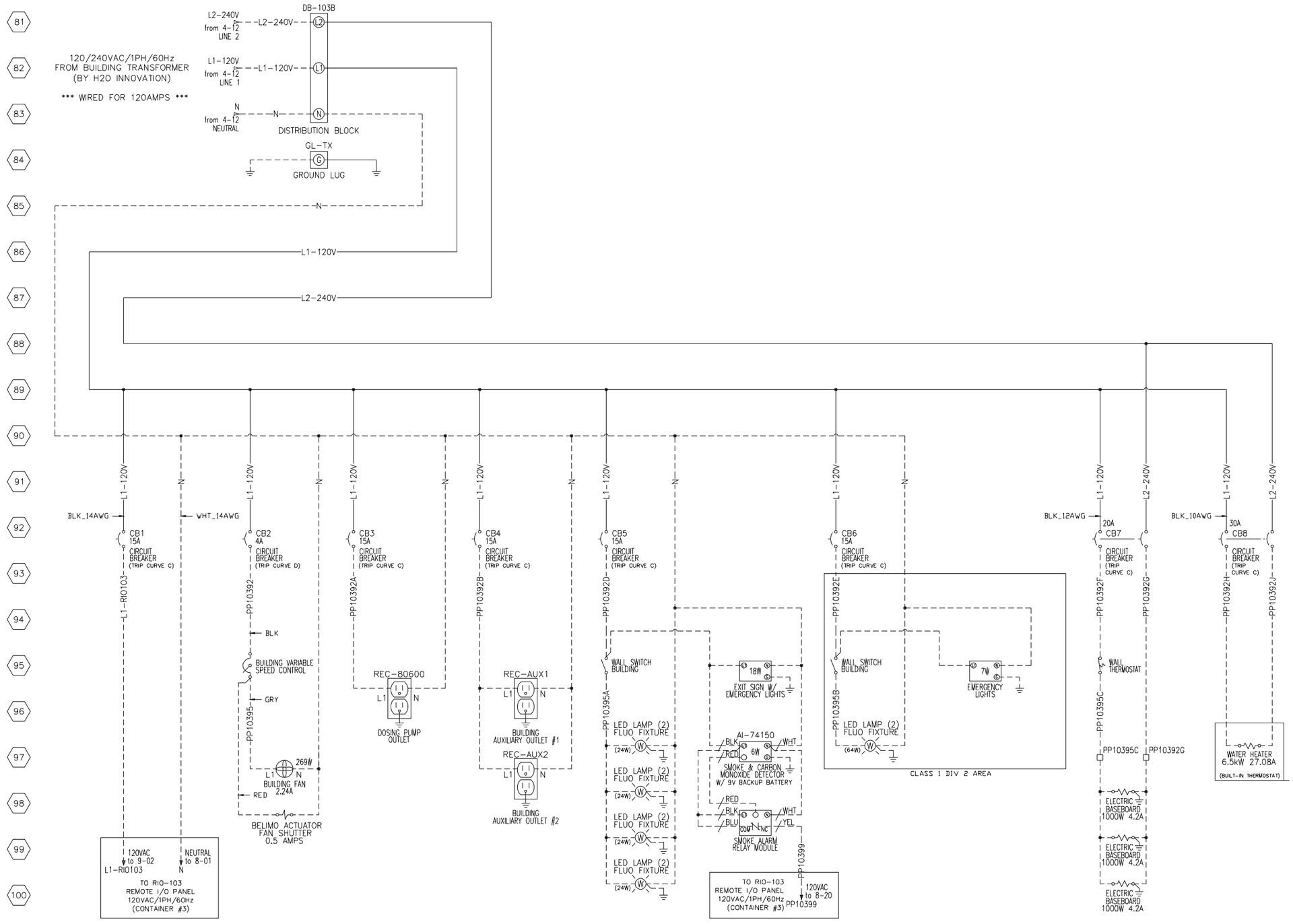

NOTE:

THE INFORMATION, SPECIFICATIONS AND DATA SHOWN ON THIS PRINT ARE FURNISHED BY AND ARE TO REMAIN THE PROPERTY OF H_2O INNOVATION.

THE PURPOSE OF THIS DOCUMENT IS TO FACILITATE THE INSTALLATION, MAINTENANCE AND OPERATION OF THE EQUIPMENT REPRESENTED BY SAID PRINT. NO OTHER USE OF THIS DOCUMENT SHALL BE MADE WITHOUT EXPRESS WRITTEN CONSENT FROM H_2O INNOVATION.

NO.	DATE	REVISION
.00	22/07/2020	AS-BUILT

DWN BY: P.L.D.
ENGINEER
CHK'D BY

h2o innovation
knowledge to share all around the globe

DWG TITLE
MELIADINE STP EXPANSION
CONTAINERIZED SEWAGE
TREATMENT PLANT
ELECTRICAL DRAWINGS

PP-103
POWER PANEL
120/240V DISTRIBUTION

JOB NO
20C1131

DWG NO
20C1131-C03-PP103-120V-01

SHEET NO
7 OF 19

REVISION
.00

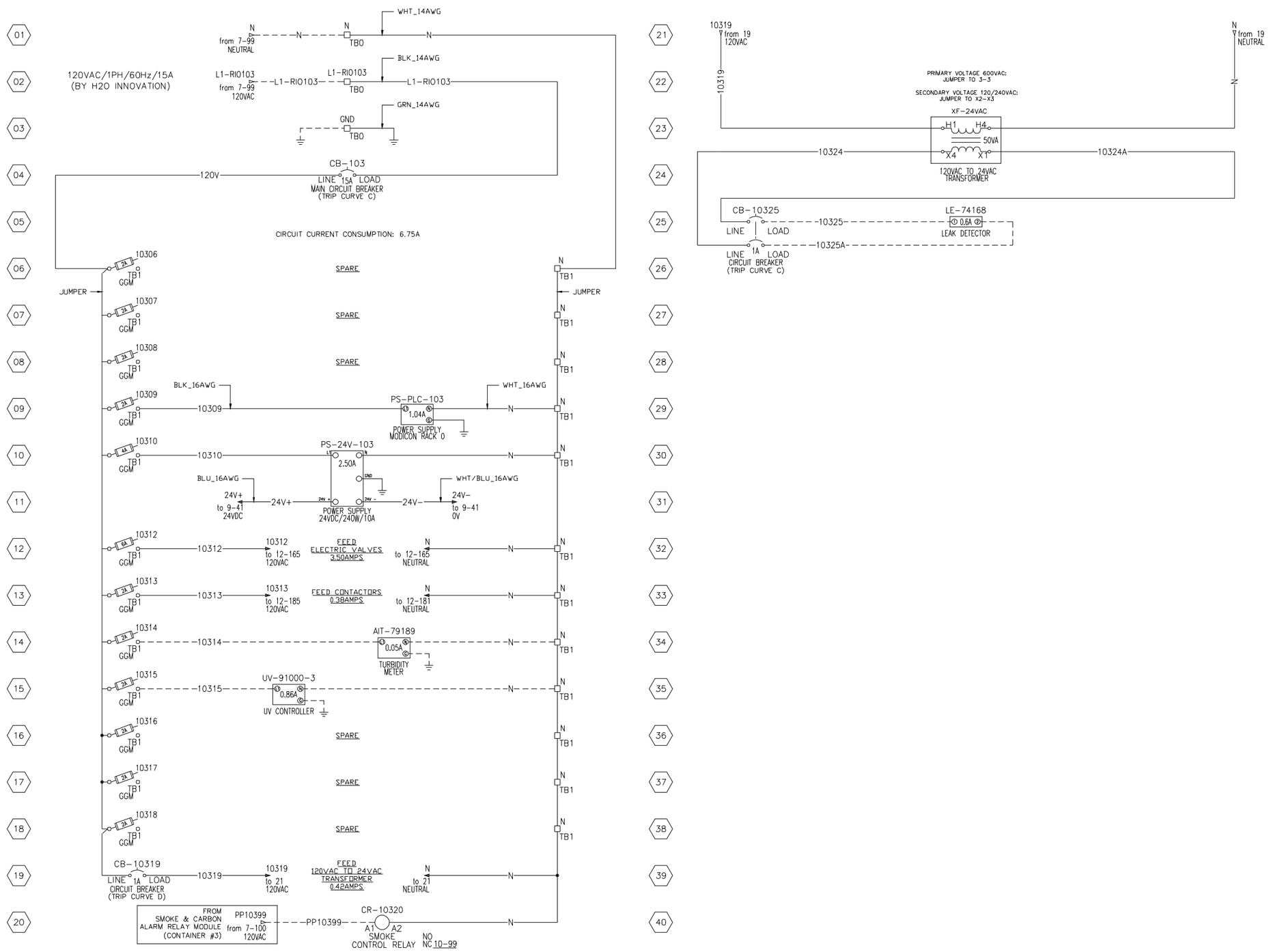

NOTE:

THE INFORMATION, SPECIFICATIONS AND DATA SHOWN ON THIS PRINT ARE FURNISHED BY AND ARE TO REMAIN THE PROPERTY OF H_2O INNOVATION.

THE PURPOSE OF THIS DOCUMENT IS TO FACILITATE THE INSTALLATION, MAINTENANCE AND OPERATION OF THE EQUIPMENT REPRESENTED BY SAID PRINT. NO OTHER USE OF THIS DOCUMENT SHALL BE MADE WITHOUT EXPRESS WRITTEN CONSENT FROM H_2O INNOVATION.

NO.	DATE	REVISION	DWN BY	ENGINEER	CHK'D BY
.00	22/07/2020	AS-BUILT	P.L.D.		

h2o innovation
knowledge to share.du sevoir à partager

DWG TITLE
MELIADINE STP EXPANSION
CONTAINERIZED SEWAGE
TREATMENT PLANT
ELECTRICAL DRAWINGS

RIO-103
REMOTE I/O PANEL
120/24VAC DISTRIBUTION

JOB NO
20C1131

DWG NO
20C1131-C03-RIO103-120V

SHEET NO
8 OF 19

REVISION
.00

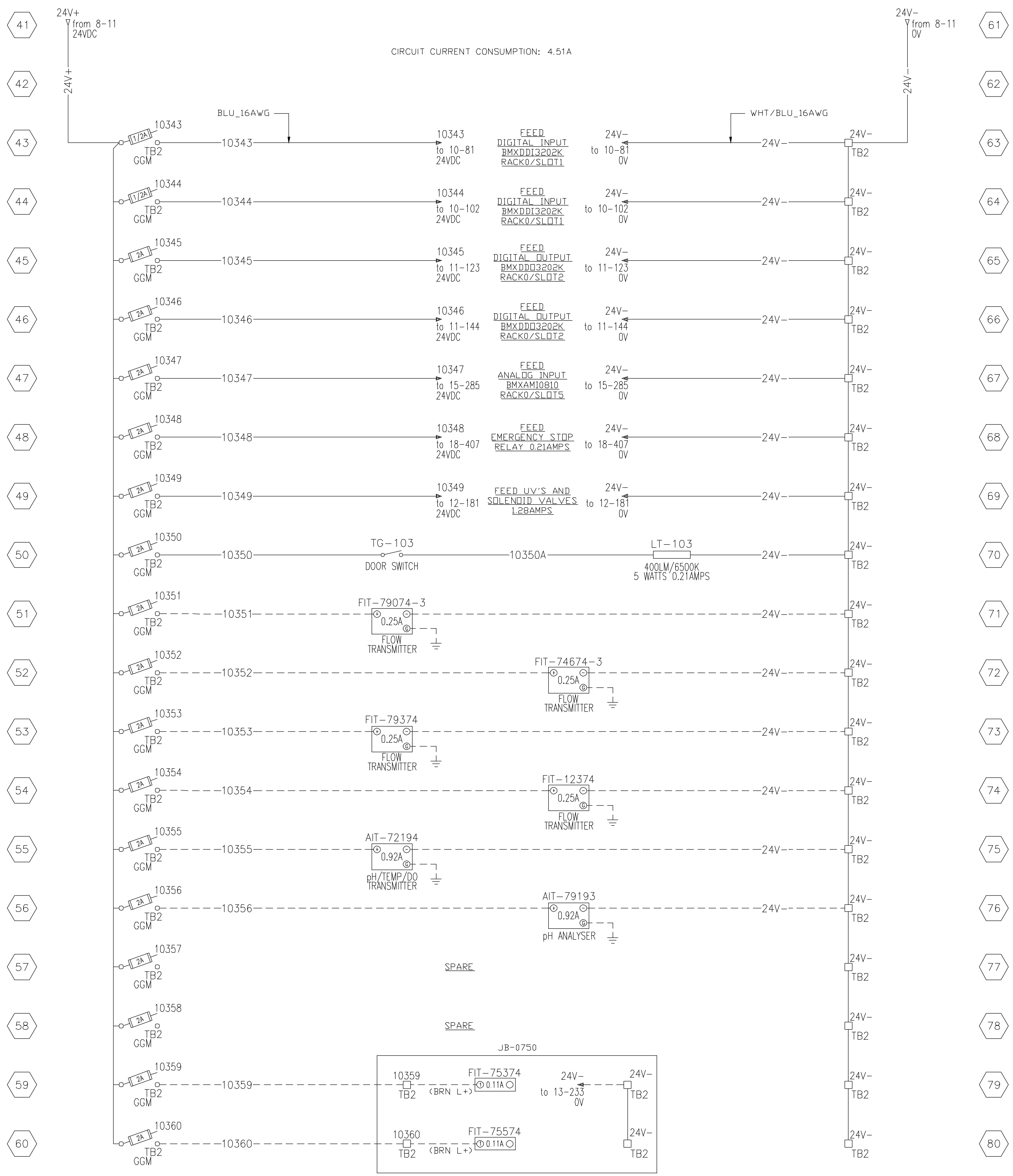

NOTE:

THE INFORMATION, SPECIFICATIONS AND DATA SHOWN ON THIS PRINT ARE FURNISHED BY AND ARE TO REMAIN THE PROPERTY OF H_2O INNOVATION.

THE PURPOSE OF THIS DOCUMENT IS TO FACILITATE THE INSTALLATION, MAINTENANCE AND OPERATION OF THE EQUIPMENT REPRESENTED BY SAID PRINT. NO OTHER USE OF THIS DOCUMENT SHALL BE MADE WITHOUT EXPRESS WRITTEN CONSENT FROM H_2O INNOVATION.

NO.	DATE	REVISION	DWN BY	ENGINEER	CHK'D BY
.00	22/07/2020	AS-BUILT	P.L.D.		

h2o innovation — knowledge to share.du savoir à partager

DWG TITLE

MELIADINE STP EXPANSION
CONTAINERIZED SEWAGE TREATMENT PLANT
ELECTRICAL DRAWINGS

RIO-103
REMOTE I/O PANEL
24VDC DISTRIBUTION

JOB NO: 20C1131

DWG NO: 20C1131-C03-RIO103-24V

SHEET NO: 9 OF 19 | REVISION: .00

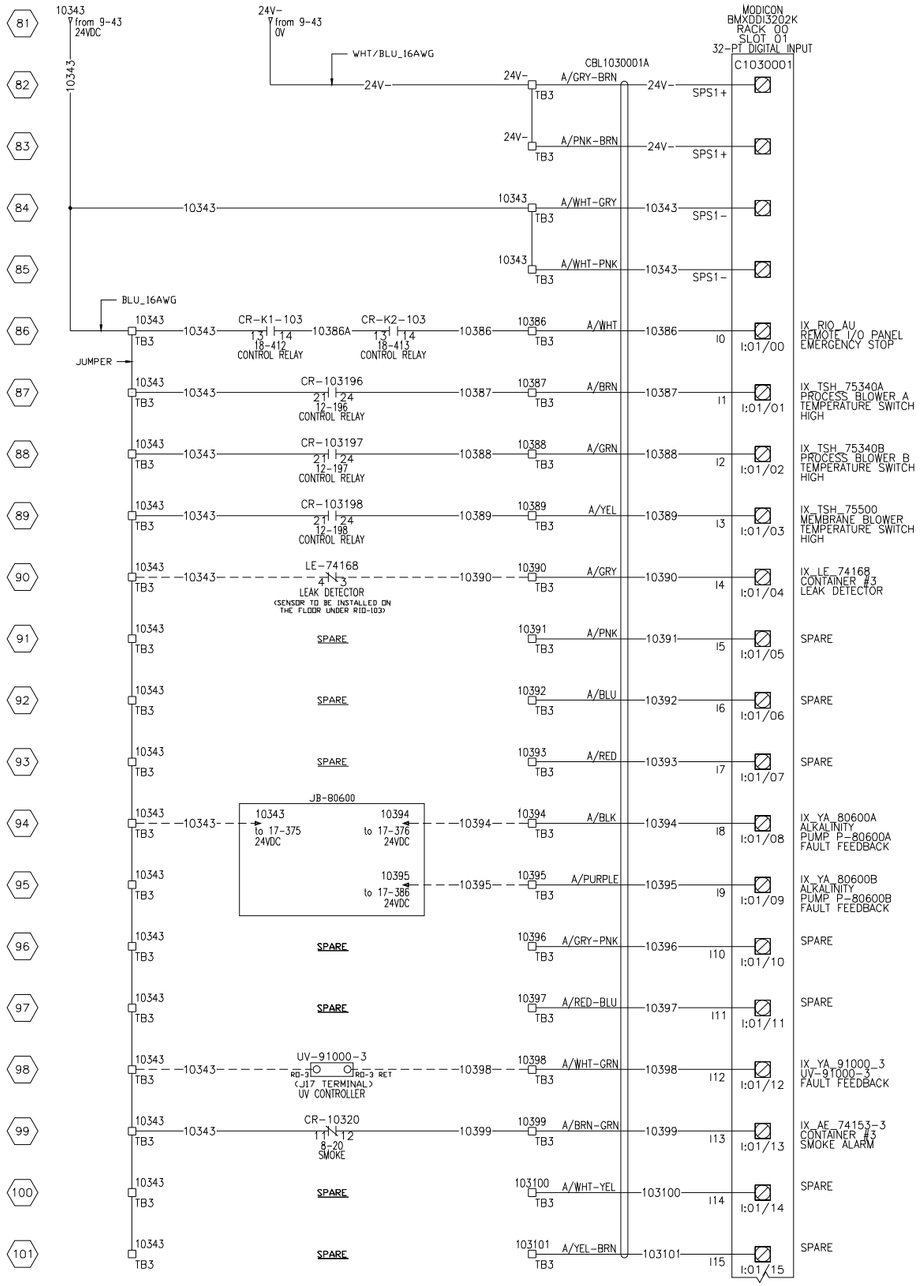

NOTE:

THE INFORMATION, SPECIFICATIONS AND DATA SHOWN ON THIS PRINT ARE FURNISHED BY AND ARE TO REMAIN THE PROPERTY OF H_2O INNOVATION.

THE PURPOSE OF THIS DOCUMENT IS TO FACILITATE THE INSTALLATION, MAINTENANCE AND OPERATION OF THE EQUIPMENT REPRESENTED BY SAID PRINT. NO OTHER USE OF THIS DOCUMENT SHALL BE MADE WITHOUT EXPRESS WRITTEN CONSENT FROM H_2O INNOVATION.

NO.	DATE	REVISION	DWN BY	P.L.D.	ENGINEER	CHK'D BY
.00	22/07/2020	AS-BUILT				

h2o innovation
knowledge to share all around the globe

DWG TITLE
MELIADINE STP EXPANSION
CONTAINERIZED SEWAGE
TREATMENT PLANT
ELECTRICAL DRAWINGS

RIO-103
REMOTE I/O PANEL
DIGITAL INPUT

JOB NO
20C1131

DWG NO
20C1131-C03-RIO103-DI-01

SHEET NO
10 OF 19

REVISION
.00

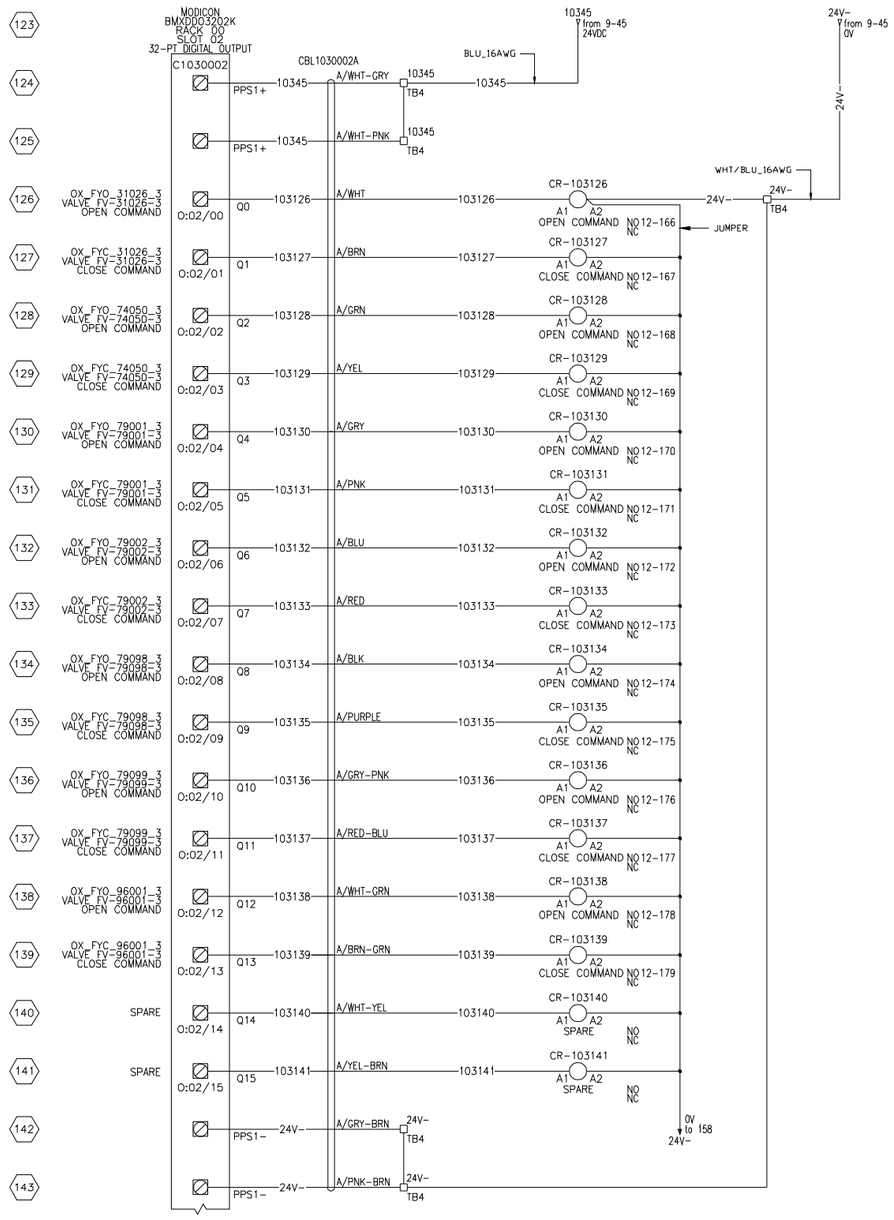

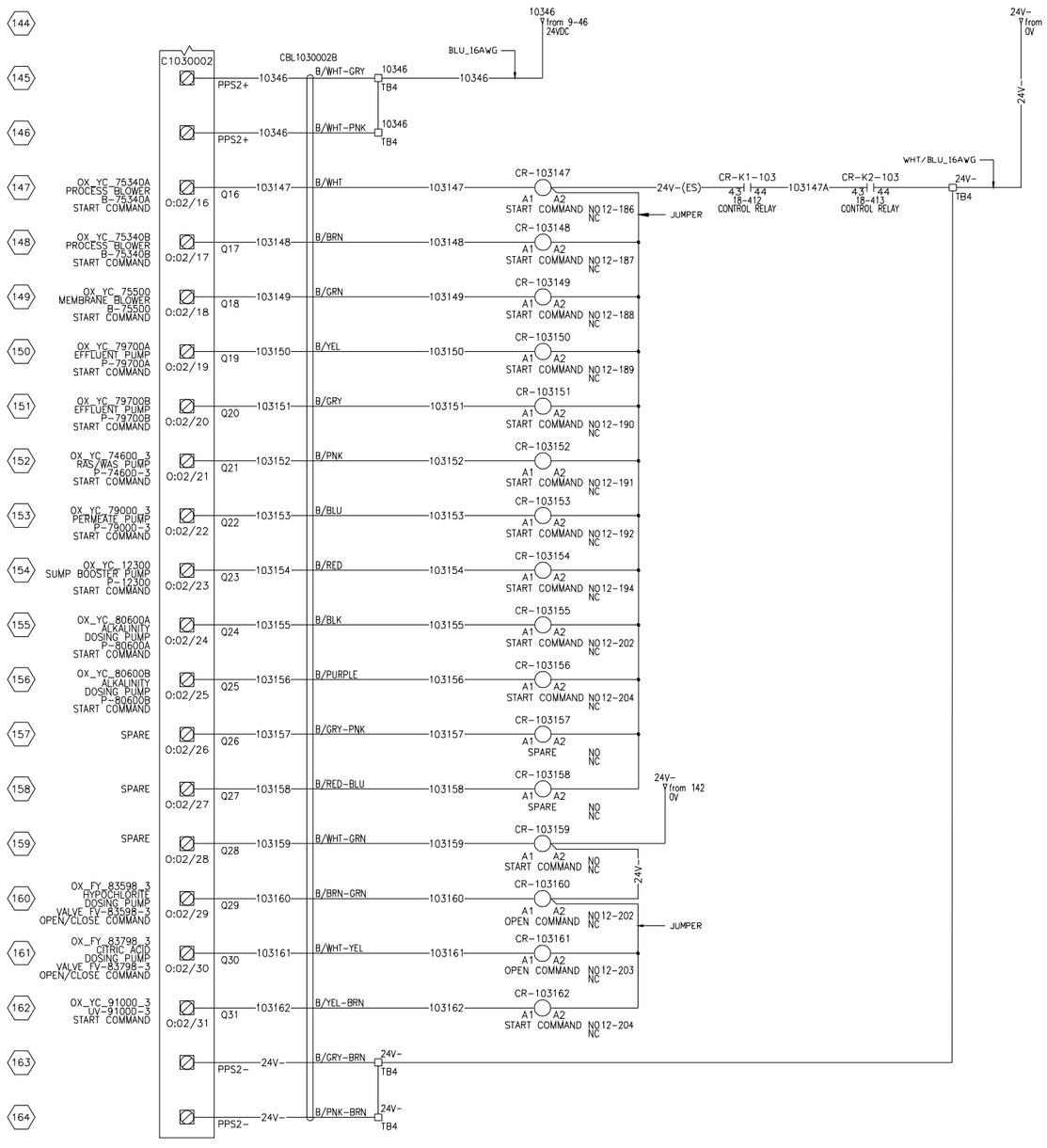

NOTE:

THE INFORMATION, SPECIFICATIONS AND DATA SHOWN ON THIS PRINT ARE FURNISHED BY AND ARE TO REMAIN THE PROPERTY OF H_2O INNOVATION.

THE PURPOSE OF THIS DOCUMENT IS TO FACILITATE THE INSTALLATION, MAINTENANCE AND OPERATION OF THE EQUIPMENT REPRESENTED BY SAID PRINT. NO OTHER USE OF THIS DOCUMENT SHALL BE MADE WITHOUT EXPRESS WRITTEN CONSENT FROM H_2O INNOVATION.

NO.	DATE	REVISION	DWN BY	P.L.D.	ENGINEER	CHK'D BY
.00	22/07/2020	AS-BUILT				

h2o innovation
knowledge to share as sound as perfect

DWG TITLE
MELIADINE STP EXPANSION
CONTAINERIZED SEWAGE TREATMENT PLANT
ELECTRICAL DRAWINGS

RIO-103
REMOTE I/O PANEL
DIGITAL OUTPUT

JOB NO
20C1131

DWG NO
20C1131-C03-RIO103-DO-01

SHEET NO
11 OF 19

REVISION
.00

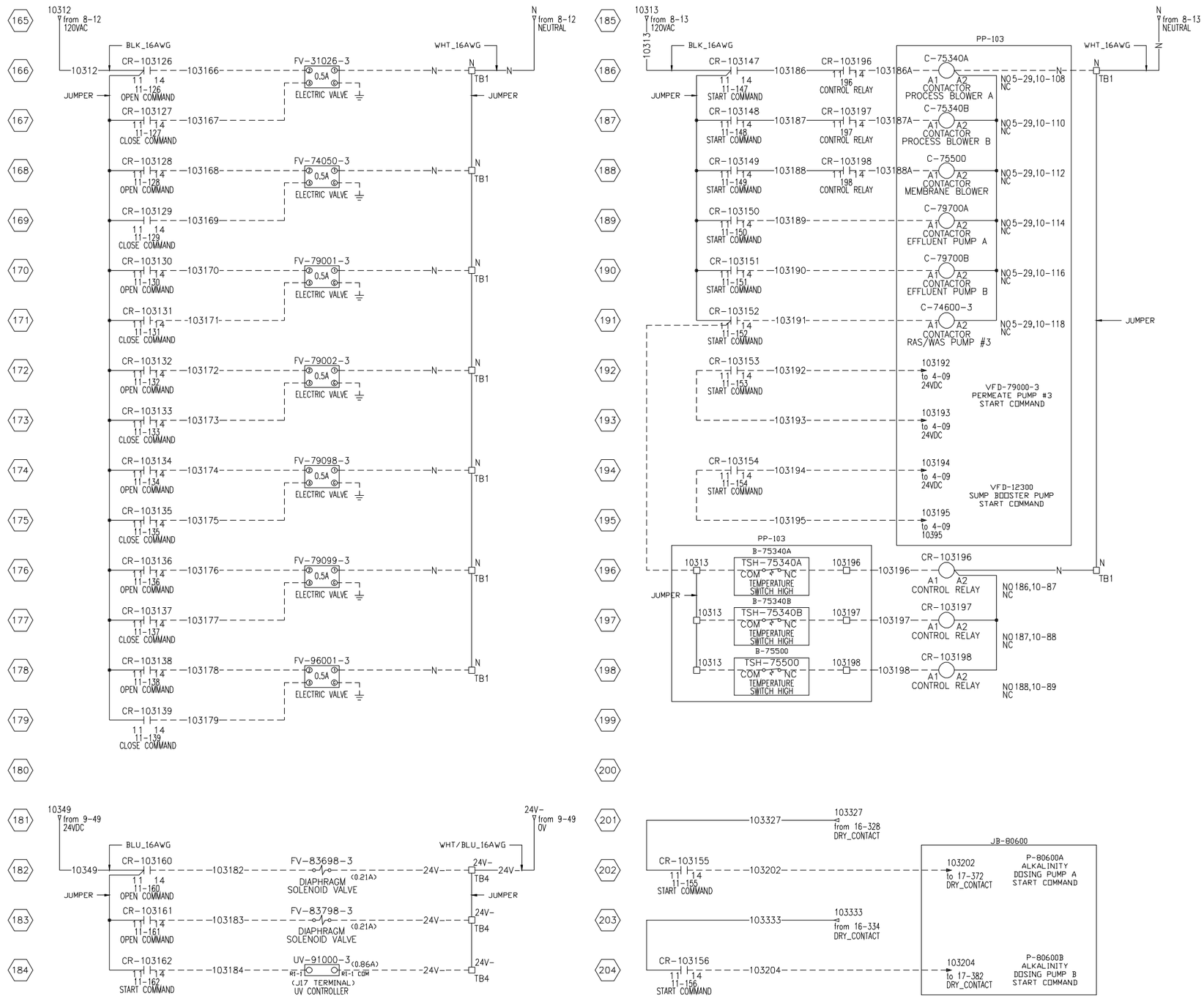

NOTE:

THE INFORMATION, SPECIFICATIONS AND DATA SHOWN ON THIS PRINT ARE FURNISHED BY AND ARE TO REMAIN THE PROPERTY OF H_2O INNOVATION.

THE PURPOSE OF THIS DOCUMENT IS TO FACILITATE THE INSTALLATION, MAINTENANCE AND OPERATION OF THE EQUIPMENT REPRESENTED BY SAID PRINT. NO OTHER USE OF THIS DOCUMENT SHALL BE MADE WITHOUT EXPRESS WRITTEN CONSENT FROM H_2O INNOVATION.

NO.	DATE	REVISION	DWN BY	ENGINEER	CHK'D BY
.00	22/07/2020	AS-BUILT	P.L.D.		

h2o innovation

DWG TITLE
MELIADINE STP EXPANSION
CONTAINERIZED SEWAGE TREATMENT PLANT
ELECTRICAL DRAWINGS

RIO-103
REMOTE I/O PANEL
DIGITAL OUTPUT

JOB NO 20C1131

DWG NO 20C1131-C03-RIO103-DO-02

SHEET NO 12 OF 19

REVISION .00

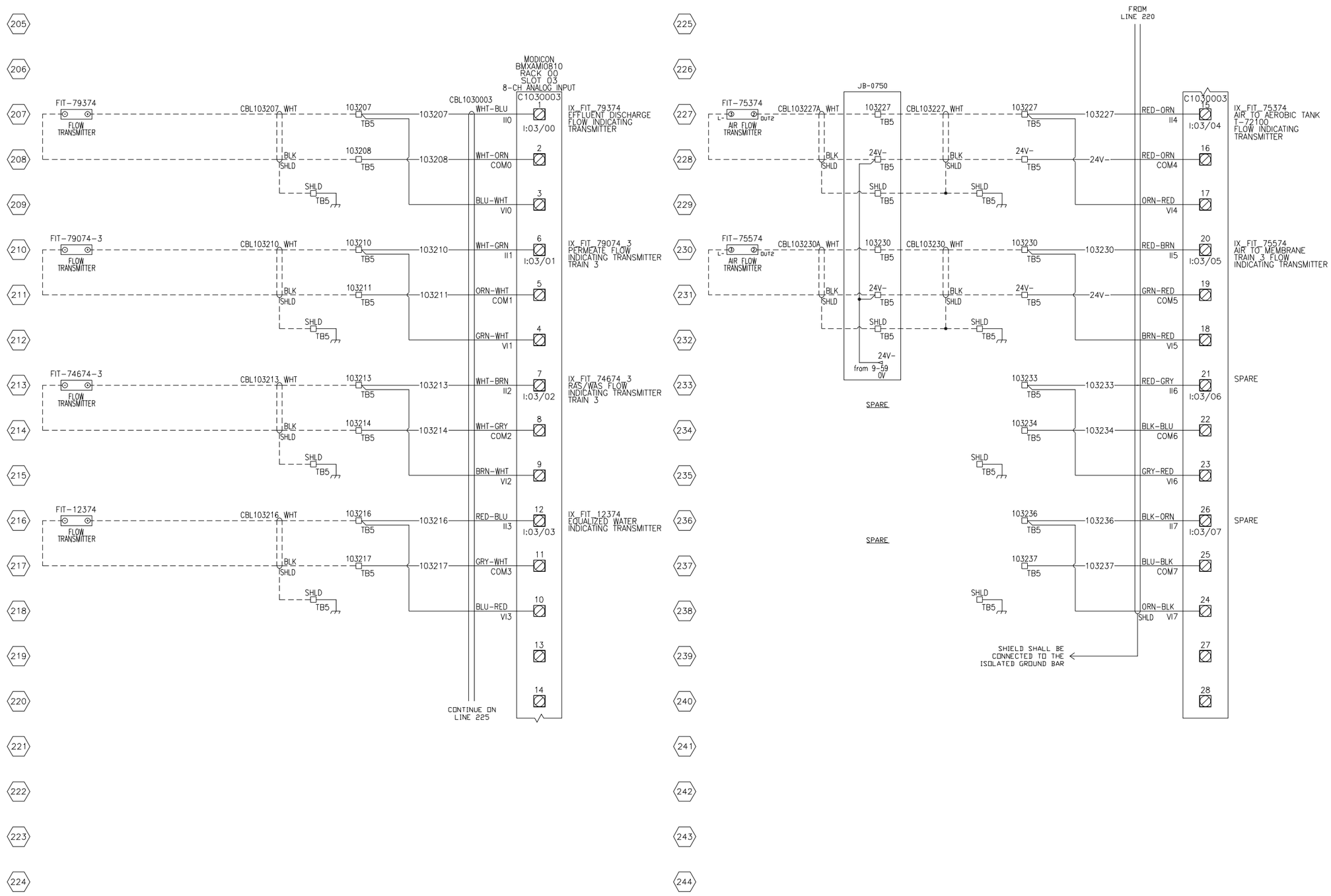

NOTE:

THE INFORMATION, SPECIFICATIONS AND DATA SHOWN ON THIS PRINT ARE FURNISHED BY AND ARE TO REMAIN THE PROPERTY OF H_2O INNOVATION.

THE PURPOSE OF THIS DOCUMENT IS TO FACILITATE THE INSTALLATION, MAINTENANCE AND OPERATION OF THE EQUIPMENT REPRESENTED BY SAID PRINT. NO OTHER USE OF THIS DOCUMENT SHALL BE MADE WITHOUT EXPRESS WRITTEN CONSENT FROM H_2O INNOVATION.

NO.	DATE	REVISION	DWN BY	ENGINEER	CHK'D BY
.00	22/07/2020	AS-BUILT	P.L.D.		

h2o innovation
knowledge to share du savoir à partager

DWG TITLE
MELIADINE STP EXPANSION
CONTAINERIZED SEWAGE
TREATMENT PLANT
ELECTRICAL DRAWINGS

RIO-103
REMOTE I/O PANEL
ANALOG INPUT

JOB NO
20C1131

DWG NO
20C1131-C03-RIO103-AI-01

SHEET NO
13 OF 19

REVISION
.00

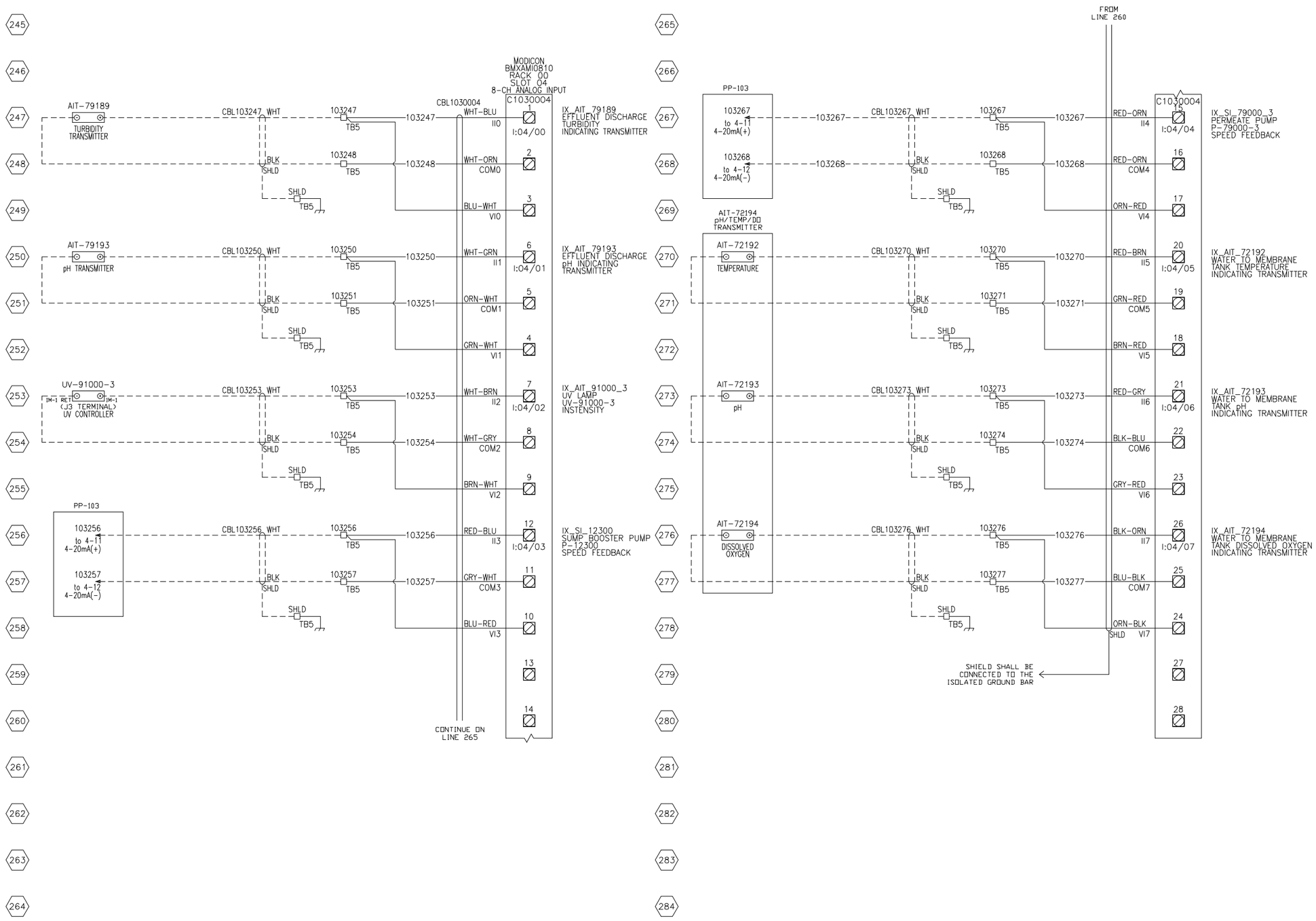

NOTE:

THE INFORMATION, SPECIFICATIONS AND DATA SHOWN ON THIS PRINT ARE FURNISHED BY AND ARE TO REMAIN THE PROPERTY OF H_2O INNOVATION.

THE PURPOSE OF THIS DOCUMENT IS TO FACILITATE THE INSTALLATION, MAINTENANCE AND OPERATION OF THE EQUIPMENT REPRESENTED BY SAID PRINT. NO OTHER USE OF THIS DOCUMENT SHALL BE MADE WITHOUT EXPRESS WRITTEN CONSENT FROM H_2O INNOVATION.

NO.	DATE	REVISION	DWN BY	ENGINEER	CHK'D BY
.00	22/07/2020	AS-BUILT	P.L.D.		

h2o innovation
knowledge to share du savoir à partager

DWG TITLE
MELIADINE STP EXPANSION
CONTAINERIZED SEWAGE
TREATMENT PLANT
ELECTRICAL DRAWINGS

RIO-103
REMOTE I/O PANEL
ANALOG INPUT

JOB NO
20C1131

DWG NO
20C1131-C03-RIO103-AI-02

SHEET NO
14 OF 19

REVISION
.00

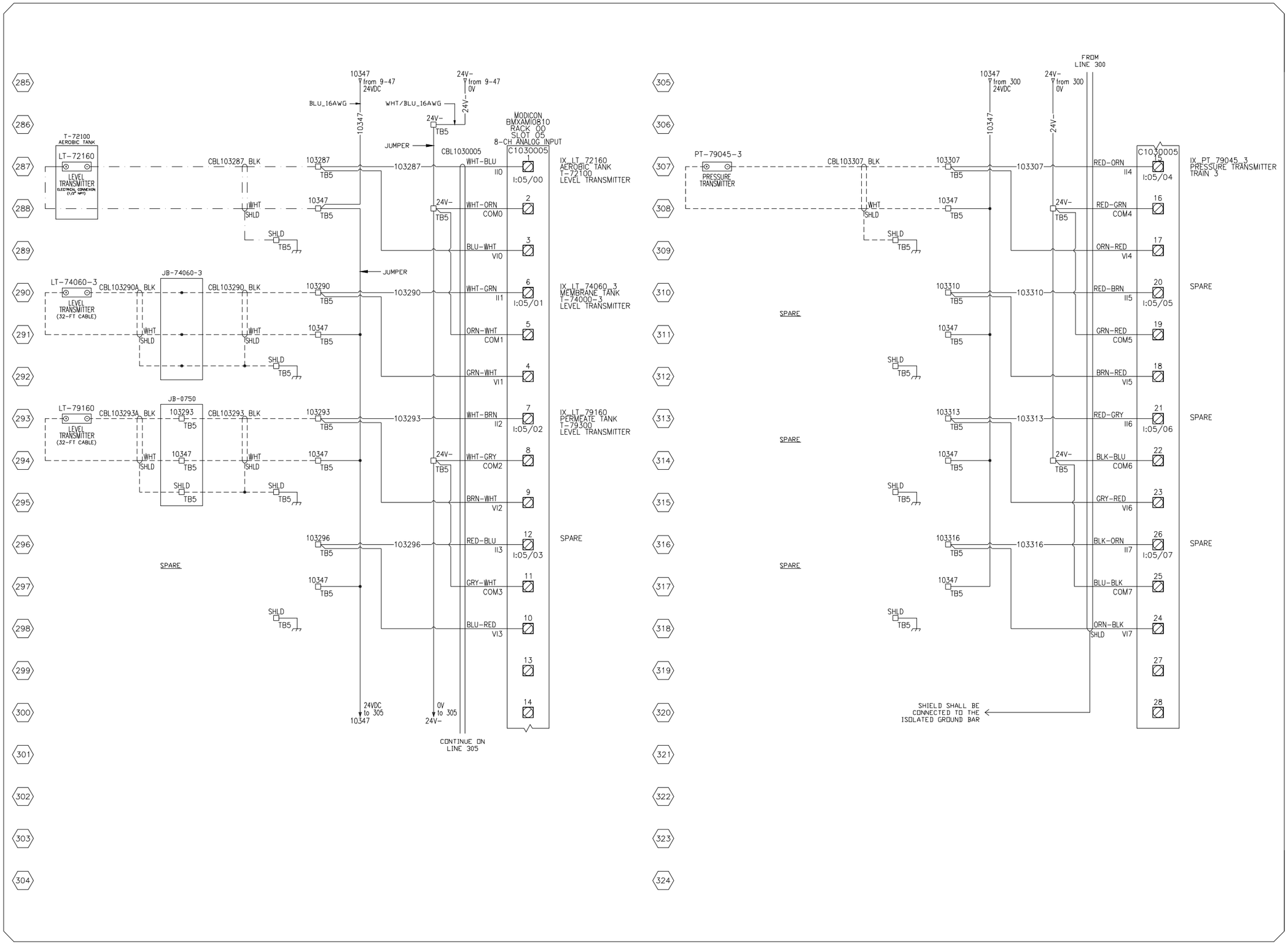

NOTE:

THE INFORMATION, SPECIFICATIONS AND DATA SHOWN ON THIS PRINT ARE FURNISHED BY AND ARE TO REMAIN THE PROPERTY OF H_2O INNOVATION.

THE PURPOSE OF THIS DOCUMENT IS TO FACILITATE THE INSTALLATION, MAINTENANCE AND OPERATION OF THE EQUIPMENT REPRESENTED BY SAID PRINT. NO OTHER USE OF THIS DOCUMENT SHALL BE MADE WITHOUT EXPRESS WRITTEN CONSENT FROM H_2O INNOVATION.

NO.	DATE	REVISION	DWN BY	ENGINEER	CHK'D BY
.00	22/07/2020	AS-BUILT	P.L.D.		

h2o innovation
knowledge to share.vu savoir à partager

DWG TITLE
MELIADINE STP EXPANSION
CONTAINERIZED SEWAGE TREATMENT PLANT
ELECTRICAL DRAWINGS

RIO-103
REMOTE I/O PANEL
ANALOG INPUT

JOB NO
20C1131

DWG NO
20C1131-C03-RIO103-AI-03

SHEET NO
15 OF 19

REVISION
.00

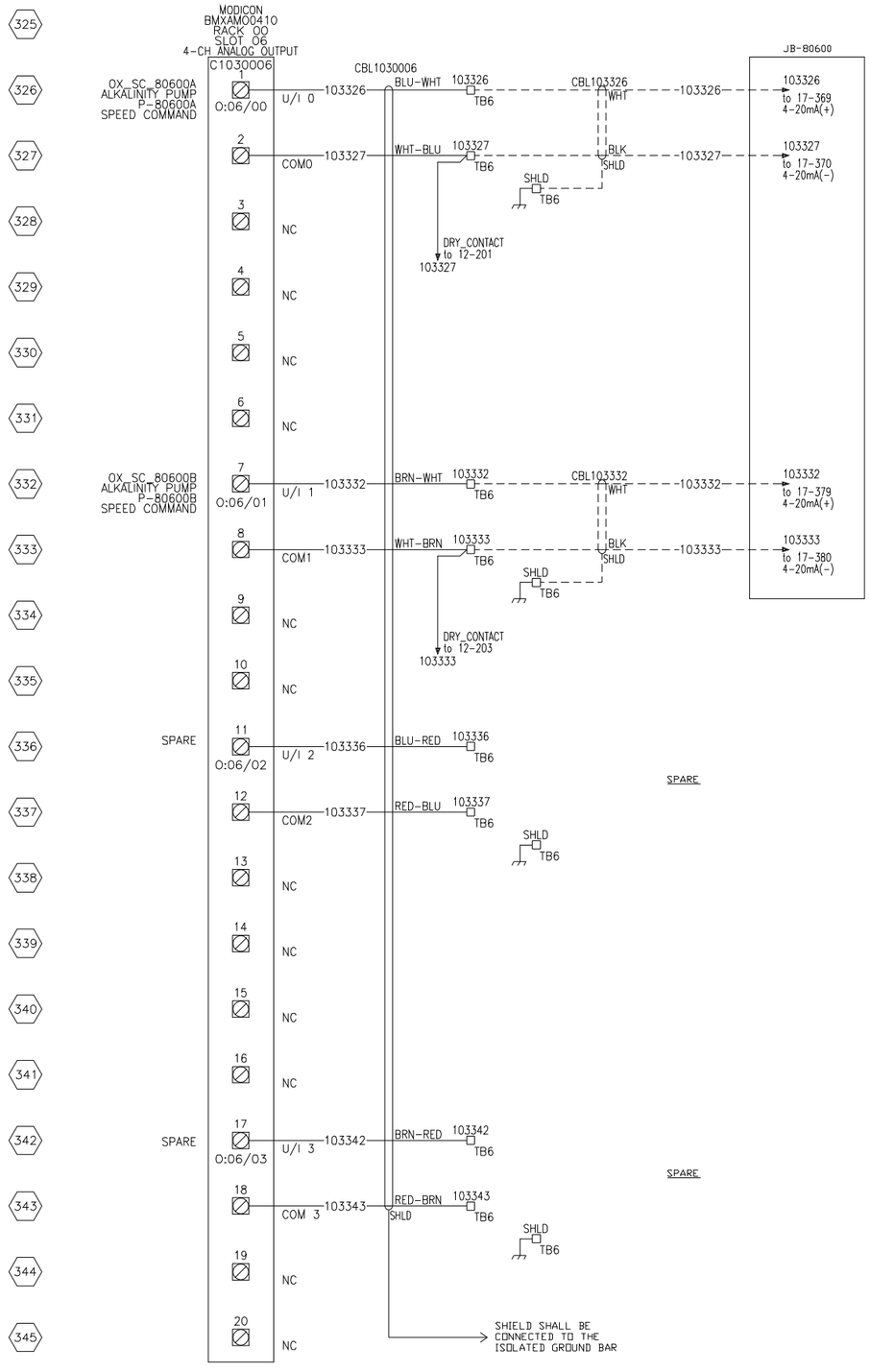

SPARE

SPARE

SPARE

SPARE

SPARE

SPARE

NOTE:

THE INFORMATION, SPECIFICATIONS AND DATA SHOWN ON THIS PRINT ARE FURNISHED BY AND ARE TO REMAIN THE PROPERTY OF H_2O INNOVATION.

THE PURPOSE OF THIS DOCUMENT IS TO FACILITATE THE INSTALLATION, MAINTENANCE AND OPERATION OF THE EQUIPMENT REPRESENTED BY SAID PRINT. NO OTHER USE OF THIS DOCUMENT SHALL BE MADE WITHOUT EXPRESS WRITTEN CONSENT FROM H_2O INNOVATION.

NO.	DATE	REVISION	DWN BY	P.L.D.	ENGINEER	CHK'D BY
.00	22/07/2020	AS-BUILT				

DWG TITLE

MELIADINE STP EXPANSION
CONTAINERIZED SEWAGE
TREATMENT PLANT
ELECTRICAL DRAWINGS

RIO-103
REMOTE I/O PANEL
ANALOG OUTPUT

JOB NO: 20C1131

DWG NO: 20C1131-C03-RIO103-AO-01

SHEET NO: 16 OF 19

REVISION: .00

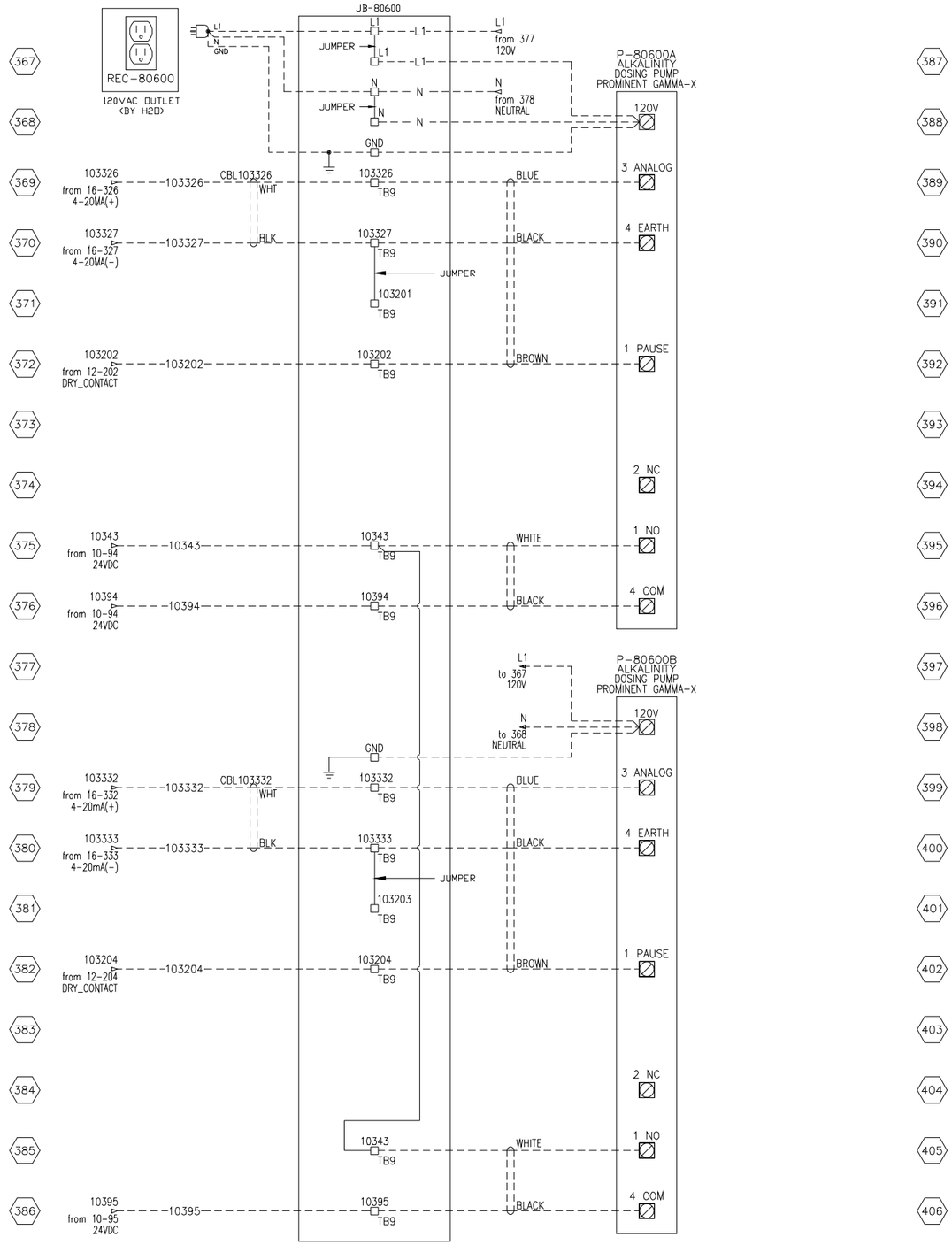

NOTE:

THE INFORMATION, SPECIFICATIONS AND DATA SHOWN ON THIS PRINT ARE FURNISHED BY AND ARE TO REMAIN THE PROPERTY OF H_2O INNOVATION.

THE PURPOSE OF THIS DOCUMENT IS TO FACILITATE THE INSTALLATION, MAINTENANCE AND OPERATION OF THE EQUIPMENT REPRESENTED BY SAID PRINT. NO OTHER USE OF THIS DOCUMENT SHALL BE MADE WITHOUT EXPRESS WRITTEN CONSENT FROM H_2O INNOVATION.

NO.	DATE	REVISION	DWN BY	ENGINEER	CHK'D BY
.00	22/07/2020	AS-BUILT	P.L.D.		

h2o innovation
knowledge to share.ou savoir-à partager

DWG TITLE
MELIADINE STP EXPANSION
CONTAINERIZED SEWAGE
TREATMENT PLANT
ELECTRICAL DRAWINGS

JB-0800
DOSING PUMPS
JUNCTION BOX

JOB NO
20C1131

DWG NO
20C1131-C03-RIO103-DOSING

SHEET NO
17 OF 19

REVISION
.00

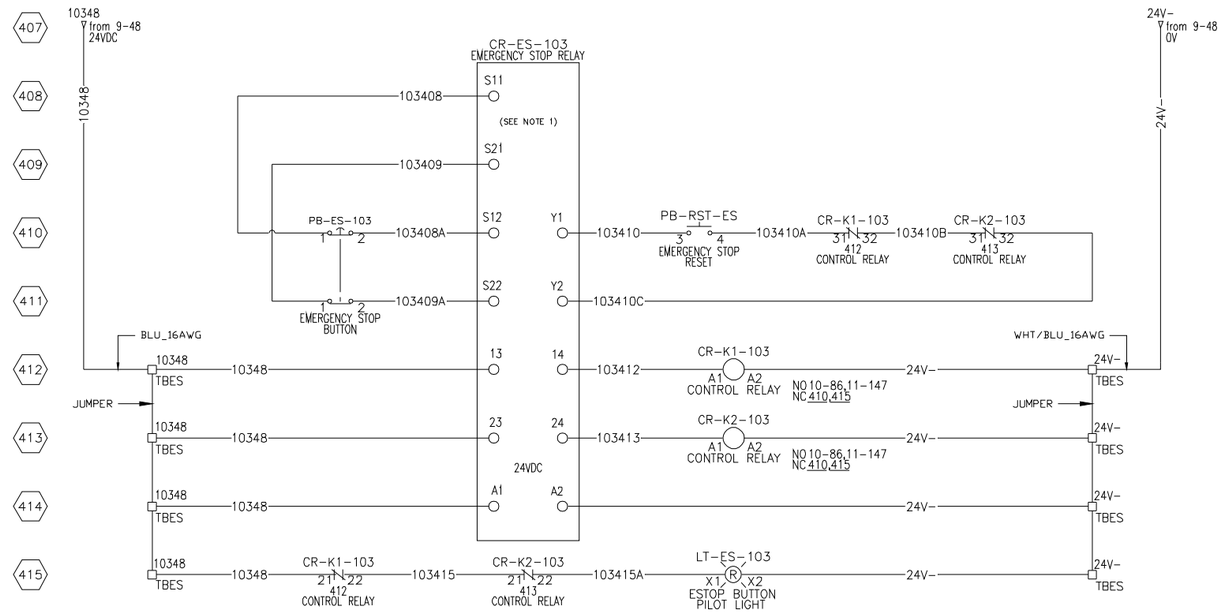

NOTES:

1. SET "START" AT "1" / SET "FUNCTION" AT "1"

NOTE:

THE INFORMATION, SPECIFICATIONS AND DATA SHOWN ON THIS PRINT ARE FURNISHED BY AND ARE TO REMAIN THE PROPERTY OF H_2O INNOVATION.

THE PURPOSE OF THIS DOCUMENT IS TO FACILITATE THE INSTALLATION, MAINTENANCE AND OPERATION OF THE EQUIPMENT REPRESENTED BY SAID PRINT. NO OTHER USE OF THIS DOCUMENT SHALL BE MADE WITHOUT EXPRESS WRITTEN CONSENT FROM H_2O INNOVATION.

NO.	DATE	REVISION	DWN BY	ENGINEER	CHK'D BY
.00	22/07/2020	AS-BUILT	P.L.D.		

h2o innovation
knowledge to share du savoir à partager

DWG TITLE
MELIADINE STP EXPANSION
CONTAINERIZED SEWAGE
TREATMENT PLANT
ELECTRICAL DRAWINGS

RIO-103
REMOTE I/O PANEL
EMERGENCY STOP

JOB NO
20C1131

DWG NO
20C1131-C03-RIO103-ES

SHEET NO	REVISION
18 OF 19	.00

427
428
429
430
431
432
433
434
435
436
437
438
439
440
441
442
443
444
445
446

INTENTIONALLY
LEFT BLANK

447
448
449
450
451
452
453
454
455
456
457
458
459
460
461
462
463
464
465
466

INTENTIONALLY
LEFT BLANK

NOTE:

THE INFORMATION, SPECIFICATIONS AND DATA SHOWN ON THIS PRINT ARE FURNISHED BY AND ARE TO REMAIN THE PROPERTY OF H_2O INNOVATION.

THE PURPOSE OF THIS DOCUMENT IS TO FACILITATE THE INSTALLATION, MAINTENANCE AND OPERATION OF THE EQUIPMENT REPRESENTED BY SAID PRINT. NO OTHER USE OF THIS DOCUMENT SHALL BE MADE WITHOUT EXPRESS WRITTEN CONSENT FROM H_2O INNOVATION.

NO.	DATE	REVISION	DWN BY	ENGINEER	CHK'D BY
.00	22/07/2020	AS-BUILT	P.L.D.		

h2o innovation
knowledge to share du savoir à partager

DWG TITLE
MELIADINE STP EXPANSION
CONTAINERIZED SEWAGE
TREATMENT PLANT
ELECTRICAL DRAWINGS

RIO-103
REMOTE I/O PANEL
BLANK PAGE

JOB NO
20C1131

DWG NO
20C1131-C03-RIO103-BLANK

SHEET NO
19 OF 19

REVISION
.00

9.9 - SINGLE LINE DIAGRAM

MELIADINE STP EXPANSION

CONTAINERIZED SEWAGE TREATMENT PLANT

C02 SINGLE LINE DIAGRAM

NOTE:

THE INFORMATION, SPECIFICATIONS AND DATA SHOWN ON THIS PRINT ARE FURNISHED BY AND ARE TO REMAIN THE PROPERTY OF H_2O INNOVATION.

THE PURPOSE OF THIS DOCUMENT IS TO FACILITATE THE INSTALLATION, MAINTENANCE AND OPERATION OF THE EQUIPMENT REPRESENTED BY SAID PRINT. NO OTHER USE OF THIS DOCUMENT SHALL BE MADE WITHOUT EXPRESS WRITTEN CONSENT FROM H_2O INNOVATION.

NO.	DATE	REVISION	DWN BY	ENGINEER	CHK'D BY
.00	22/07/2020	AS-BUILT	P.L.D		

h2o innovation

knowledge to elevate environment

DWG TITLE

MELIADINE STP EXPANSION
CONTAINERIZED SEWAGE
TREATMENT PLANT
SINGLE LINE DIAGRAM

TITLE

JOB NO: 20C1131

DWG NO: 20C1131-C02-TITLE

SHEET NO: 1 OF 4

REVISION: .00

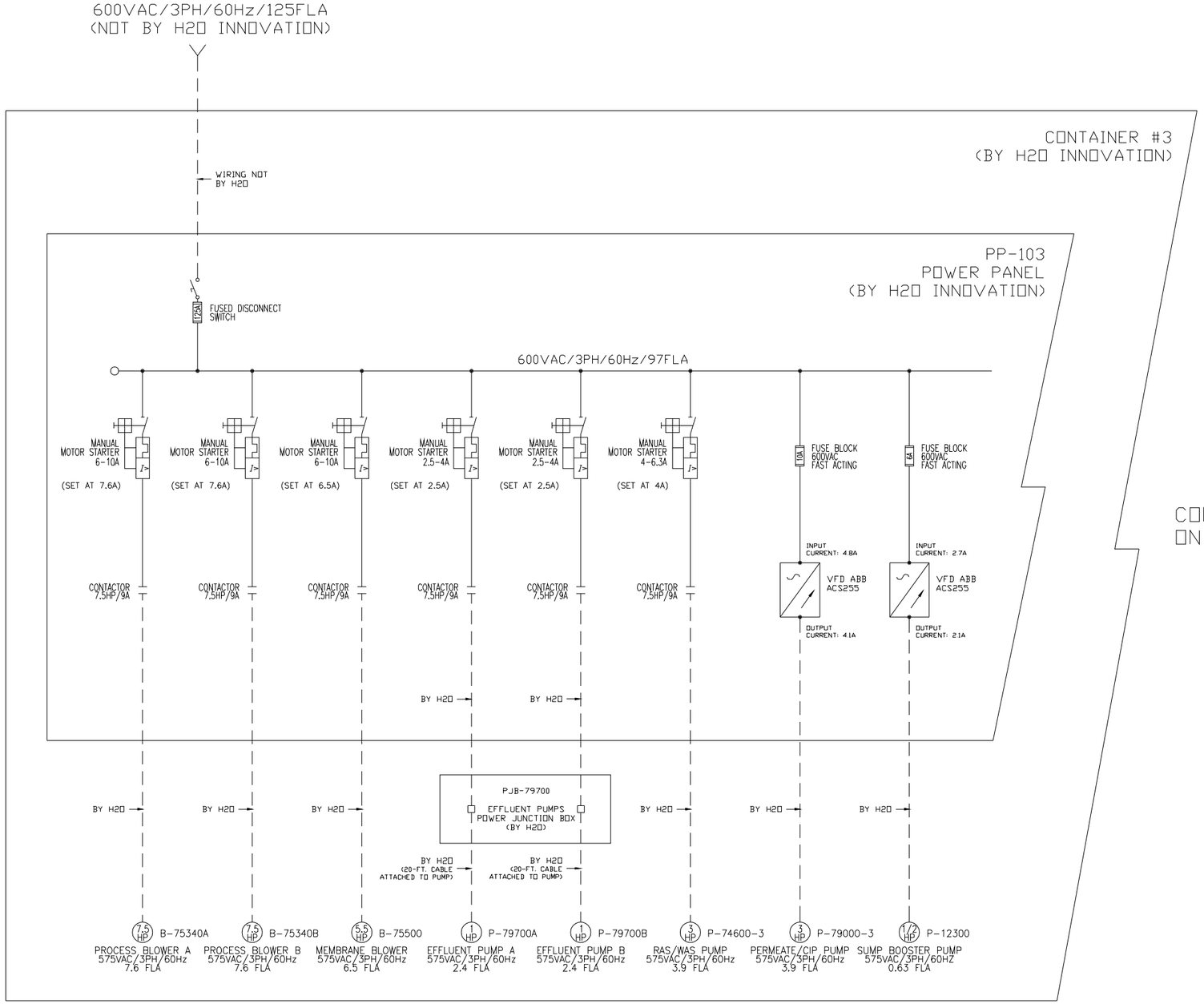

CONTINUE ON PAGE 3

LEGEND

- FUSED DISCONNECT SWITCH
- FUSE
- MANUAL MOTOR STARTER
- CONTACTOR
- VARIABLE FREQUENCY DRIVE
- ELECTRICAL MOTOR

NOTE:

THE INFORMATION, SPECIFICATIONS AND DATA SHOWN ON THIS PRINT ARE FURNISHED BY AND ARE TO REMAIN THE PROPERTY OF H_2O INNOVATION.

THE PURPOSE OF THIS DOCUMENT IS TO FACILITATE THE INSTALLATION, MAINTENANCE AND OPERATION OF THE EQUIPMENT REPRESENTED BY SAID PRINT. NO OTHER USE OF THIS DOCUMENT SHALL BE MADE WITHOUT EXPRESS WRITTEN CONSENT FROM H_2O INNOVATION.

NO.	DATE	REVISION	DWN BY	ENGINEER	CHK'D BY
.00	22/07/2020	AS-BUILT	P.L.D.		

DWG TITLE
MELIADINE STP EXPANSION
CONTAINERIZED SEWAGE TREATMENT PLANT
SINGLE LINE DIAGRAM

PP-102
POWER PANEL
POWER DISTRIBUTION

JOB NO 20C1131

DWG NO U65875-C02-01-01

SHEET NO 2 OF 4

REVISION .00

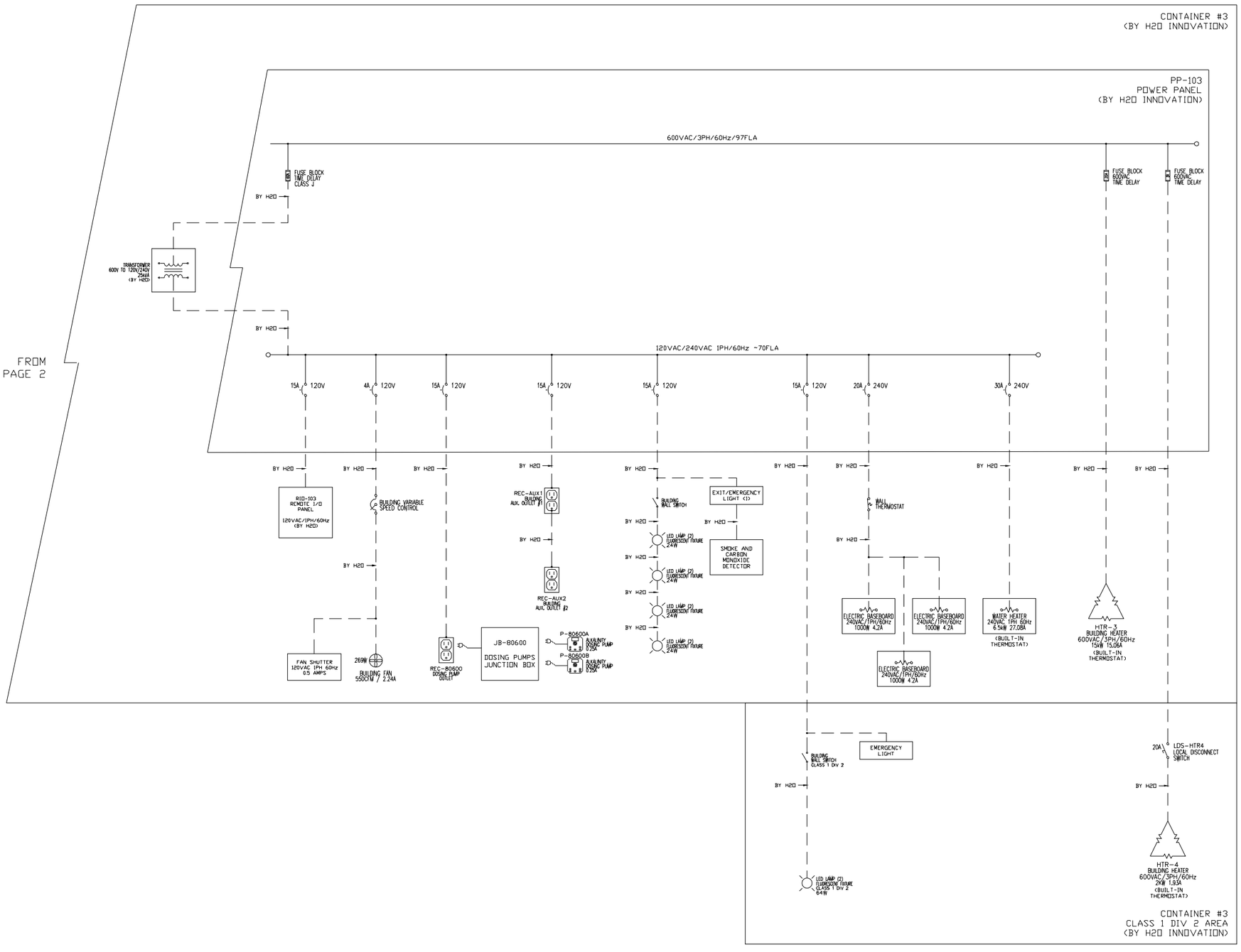

LEGEND

- TRANSFORMER
- FUSE
- CIRCUIT BREAKER
- 1PH HEATER
- RECEPTACLE
- 3PH HEATER
- FAN
- DOSING PUMP
- LIGHT

NOTE:

THE INFORMATION, SPECIFICATIONS AND DATA SHOWN ON THIS PRINT ARE FURNISHED BY AND ARE TO REMAIN THE PROPERTY OF H_2O INNOVATION.

THE PURPOSE OF THIS DOCUMENT IS TO FACILITATE THE INSTALLATION, MAINTENANCE AND OPERATION OF THE EQUIPMENT REPRESENTED BY SAID PRINT. NO OTHER USE OF THIS DOCUMENT SHALL BE MADE WITHOUT EXPRESS WRITTEN CONSENT FROM H_2O INNOVATION.

NO.	DATE	REVISION	DWN BY	ENGINEER	CHK'D BY
.00	22/07/2020	AS-BUILT	P.L.D.		

h2o innovation

DWG TITLE

MELIADINE STP EXPANSION
CONTAINERIZED SEWAGE
TREATMENT PLANT
SINGLE LINE DIAGRAM

PP-102
POWER PANEL
POWER DISTRIBUTION

JOB NO
20C1131

DWG NO
20C1131-C02-01-02

SHEET NO
3 OF 4

REVISION
.00

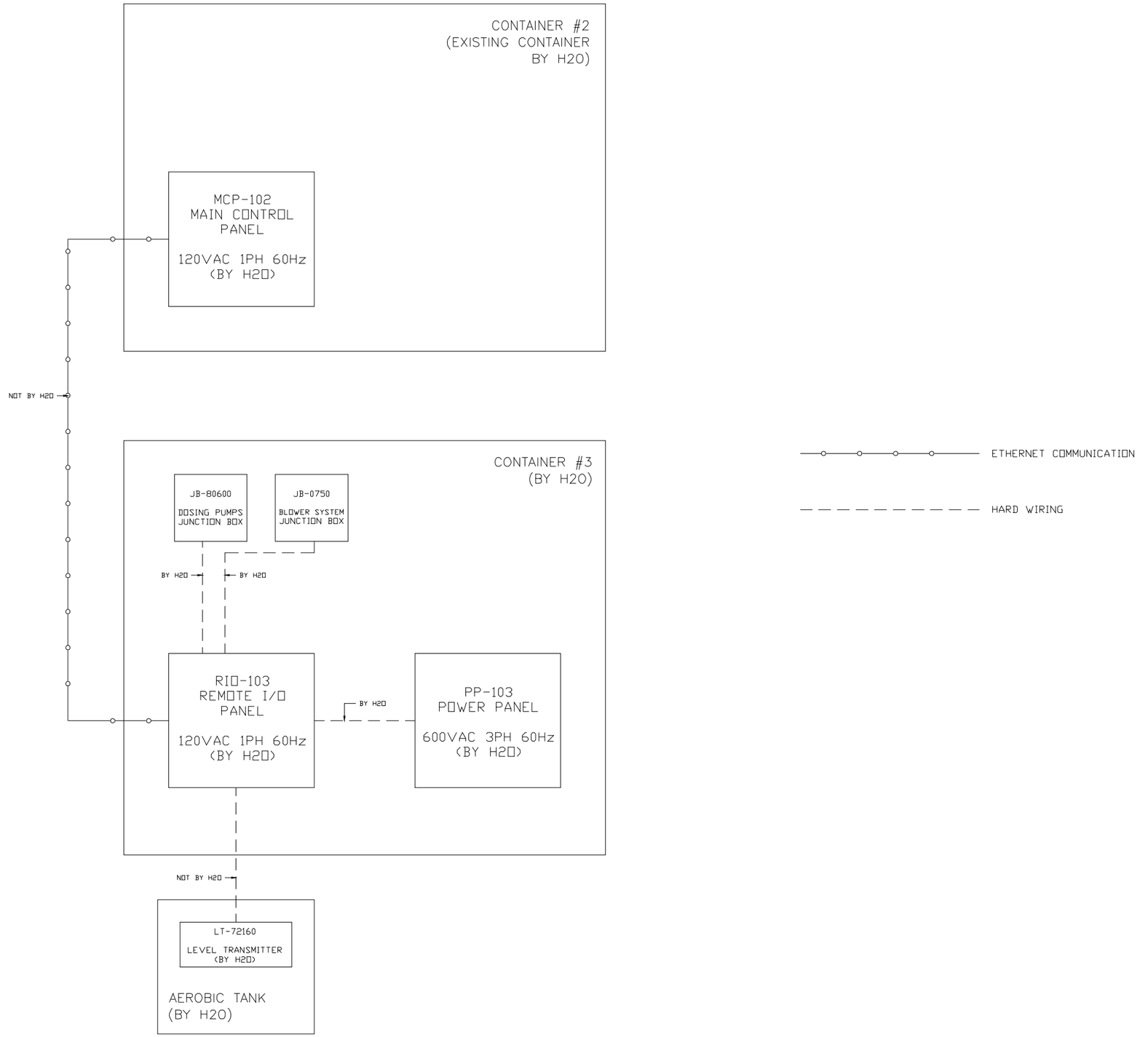

NOTE:

THE INFORMATION, SPECIFICATIONS AND DATA SHOWN ON THIS PRINT ARE FURNISHED BY AND ARE TO REMAIN THE PROPERTY OF H_2O INNOVATION.

THE PURPOSE OF THIS DOCUMENT IS TO FACILITATE THE INSTALLATION, MAINTENANCE AND OPERATION OF THE EQUIPMENT REPRESENTED BY SAID PRINT. NO OTHER USE OF THIS DOCUMENT SHALL BE MADE WITHOUT EXPRESS WRITTEN CONSENT FROM H_2O INNOVATION.

NO.	DATE	REVISION	DWN BY	ENGINEER	CHK'D BY
.00	22/07/2020	AS-BUILT	P.L.D.		

DWG TITLE

MELIADINE STP EXPANSION
CONTAINERIZED SEWAGE
TREATMENT PLANT
SINGLE LINE DIAGRAM

INTERCONNECTION
WIRING

JOB NO 20C1131

DWG NO 20C1131-C02-01-03

SHEET NO 4 OF 4

REVISION .00

9.10 - CONTROL PANEL DRAWINGS

MELIADINE STP EXPANSION

CONTAINERIZED SEWAGE TREATMENT PLANT

E02 ELECTRICAL PANEL DRAWINGS

NOTE:

THE INFORMATION, SPECIFICATIONS AND DATA SHOWN ON THIS PRINT ARE FURNISHED BY AND ARE TO REMAIN THE PROPERTY OF H_2O INNOVATION.

THE PURPOSE OF THIS DOCUMENT IS TO FACILITATE THE INSTALLATION, MAINTENANCE AND OPERATION OF THE EQUIPMENT REPRESENTED BY SAID PRINT. NO OTHER USE OF THIS DOCUMENT SHALL BE MADE WITHOUT EXPRESS WRITTEN CONSENT FROM H_2O INNOVATION.

NO.	DATE	REVISION	DWN BY	ENGINEER	CHK'D BY
.00	22/07/2020	AS-BUILT	P.L.D.		

DWG TITLE

MELIADINE STP EXPANSION
CONTAINERIZED SEWAGE
TREATMENT PLANT
ELECTRICAL DRAWINGS

TITLE

JOB NO: 20C1131

DWG NO: 20C1131-E02-TITLE

SHEET NO: 1 OF 11

REVISION: .00

DRAWING #	DESCRIPTION 1	DESCRIPTION 2	DESCRIPTION 3	PAGE
20C1131-E02-TITLE		TITLE		1
20C1131-E02-INDEX		INDEX		2
20C1131-E02-PP103-PL	PP-103	POWER PANEL	PANEL LAYOUT	3
20C1131-E02-PP103-BOM	PP-103	POWER PANEL	BILL OF MATERIAL	4
20C1131-E02-RIO103-PL	RIO-103	REMOTE I/O PANEL	PANEL LAYOUT	5
20C1131-E02-RIO103-BOM	RIO-103	REMOTE I/O PANEL	BILL OF MATERIAL	6
20C1131-E02-PJB79700-PL	PJB-79700	POWER JUNCTION BOX	PANEL LAYOUT	7
20C1131-E02-JB0750-PL	JB-0750	JUNCTION BOX	PANEL LAYOUT	8
20C1131-E02-JB0800-PL	JB-80600	JUNCTION BOX	PANEL LAYOUT	9
20C1131-E02-XF103-PL	XF-103	BUILDING TRANSFORMER	PANEL LAYOUT	10
20C1131-E02-LDSHTR4-PL	LDS-HTR4	LOCAL DISCONNECT SWITCH	PANEL LAYOUT	11

NOTE:

THE INFORMATION, SPECIFICATIONS AND DATA SHOWN ON THIS PRINT ARE FURNISHED BY AND ARE TO REMAIN THE PROPERTY OF H_2O INNOVATION.

THE PURPOSE OF THIS DOCUMENT IS TO FACILITATE THE INSTALLATION, MAINTENANCE AND OPERATION OF THE EQUIPMENT REPRESENTED BY SAID PRINT. NO OTHER USE OF THIS DOCUMENT SHALL BE MADE WITHOUT EXPRESS WRITTEN CONSENT FROM H_2O INNOVATION.

NO.	DATE	REVISION	DWN BY	ENGINEER	CHK'D BY
.00	22/07/2020	AS-BUILT	P.L.D.		

h2o innovation
knowledge to share.ou sevoir-à partager

DWG TITLE
MELIADINE STP EXPANSION
CONTAINERIZED SEWAGE
TREATMENT PLANT
ELECTRICAL DRAWINGS

INDEX

JOB NO
20C1131

DWG NO
20C1131-E02-INDEX

SHEET NO
2 OF 11

REVISION
.00

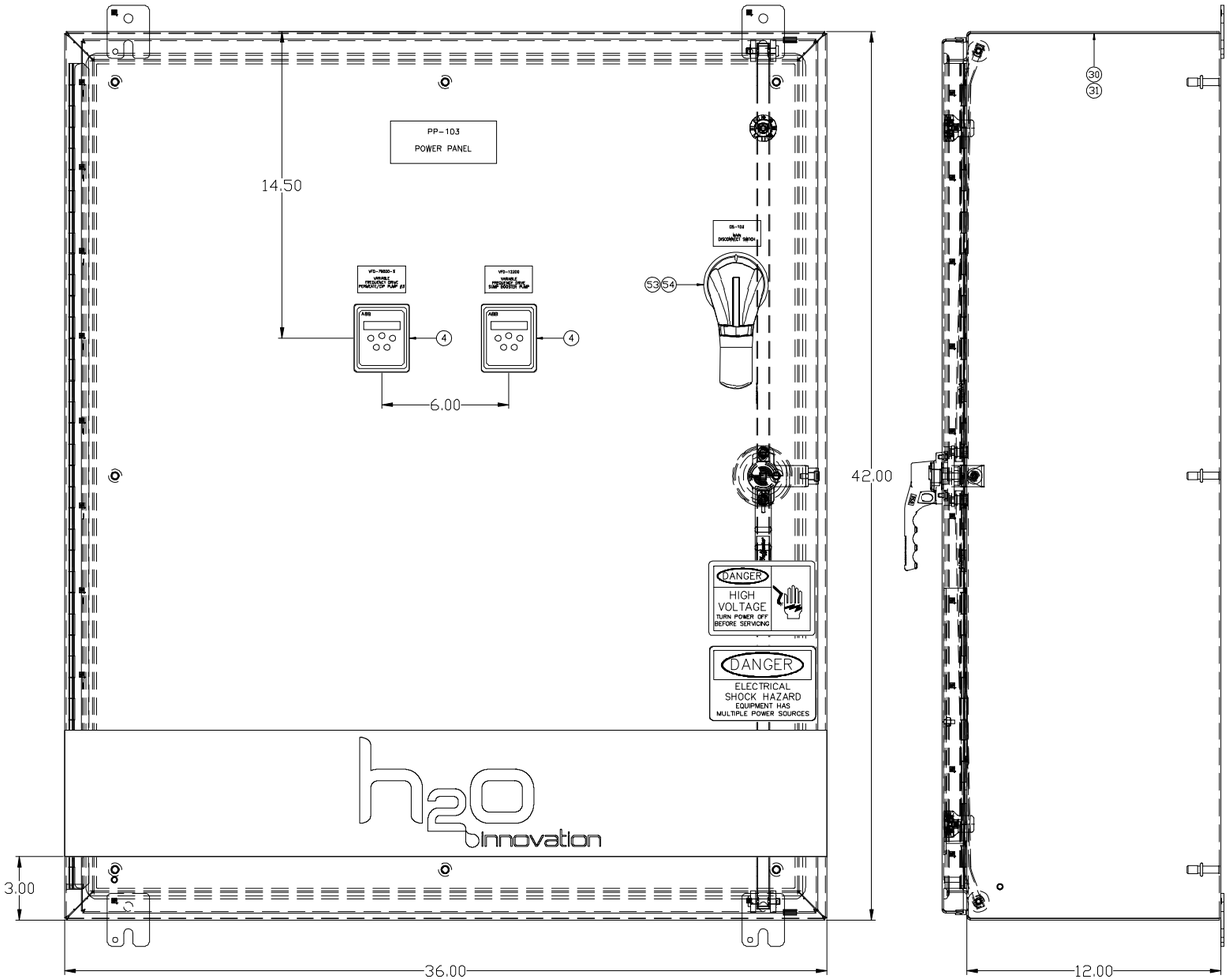

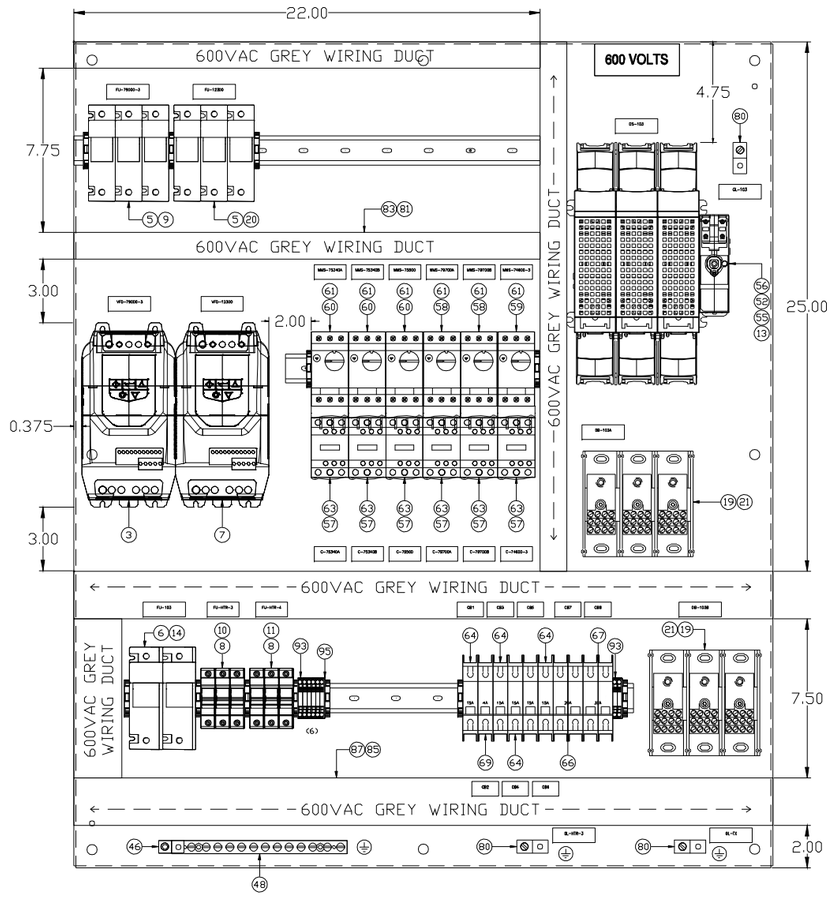

HEAT DISSIPATION LIST

MAX TEMP OUTSIDE THE ENCLOSURE: 25 °C
MAX DESIRED TEMP INSIDE THE ENCLOSURE: 50 °C
ENCLOSURE INTERNAL TEMP WITHOUT COOLING: 43 °C

QTY	PART NUMBER	HEAT DISSIPATION UNIT	HEAT DISSIPATION SUBTOTAL	DEVICE MAX TEMP
1	ACS255-03U-02A1-6	22.0 W	22.0 W	50 °C
1	ACS255-03U-04A1-6	66.0 W	66.0 W	50 °C
2	GV2P08	7.5 W	15.0 W	60 °C
1	GV2P10	7.5 W	7.5 W	60 °C
3	GV2P14	7.5 W	22.5 W	60 °C
6	LC1D09G7	3.0 W	18.0 W	60 °C
5	M9F42115	2.3 W	11.5 W	70 °C
1	M9F42220	4.4 W	4.4 W	70 °C
1	M9F42230	4.4 W	4.4 W	70 °C
1	M9F43104	2.2 W	2.2 W	70 °C
		TOTAL:	173.5 W	

NOTE 1: THIS PANEL WILL BE INSTALLED ON WALL (CONTAINER #3)

NOTE 2: ALL CONNECTIONS WILL BE THROUGH THE BOTTOM

NOTE 3: THIS PANEL APPROX. WEIGHT 200 LBS

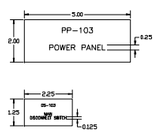

- ADHESIVE BACKED LAMINATED PLASTIC
- BLACK LETTERING ON WHITE BACKGROUND
- THICKNESS 1/16"

NOTE:

THE INFORMATION, SPECIFICATIONS AND DATA SHOWN ON THIS PRINT ARE FURNISHED BY AND ARE TO REMAIN THE PROPERTY OF H_2O INNOVATION.

THE PURPOSE OF THIS DOCUMENT IS TO FACILITATE THE INSTALLATION, MAINTENANCE AND OPERATION OF THE EQUIPMENT REPRESENTED BY SAID PRINT. NO OTHER USE OF THIS DOCUMENT SHALL BE MADE WITHOUT EXPRESS WRITTEN CONSENT FROM H_2O INNOVATION.

NO.	DATE	REVISION	DWN BY	ENGINEER	CHK'D BY
.00	22/07/2020	AS-BUILT	P.L.D.		

DWG TITLE
MELIADINE STP EXPANSION
CONTAINERIZED SEWAGE
TREATMENT PLANT
ELECTRICAL DRAWINGS

PP-103
POWER PANEL
PANEL LAYOUT

JOB NO
20C1131

DWG NO
20C1131-E02-PP103-PL

SHEET NO
3 OF 11

REVISION
.00

ITEM	QTY	SUB	CATALOG	MFG	DESCRIPTION
3	1	*1	ACS255-03U-04A1-6	ABB	AJUSTABLE FREQUENCY AC DRIVE, 600VAC, 3HP, IP20
4		*1	RCRP-02	ABB	PANEL MOUNT REMOTE KEYPAD FOR ACS255 DRIVES
7	1	*1	ACS255-03U-02A1-6	ABB	AJUSTABLE FREQUENCY AC DRIVE, 600VAC, 1HP, IP20
4		*1	RCRP-02	ABB	PANEL MOUNT REMOTE KEYPAD FOR ACS255 DRIVES
5	1	*1	CH30J3	BUSSMANN	3 POLE FUSE BLOCK - CLASS J - 30A
9		*6	DFJ10	BUSSMANN	FUSE HIGH SPEED/CLASS J, 10AMPS
5	1	*1	CH30J3	BUSSMANN	3 POLE FUSE BLOCK - CLASS J - 30A
20		*6	DFJ6	BUSSMANN	FUSE HIGH SPEED/CLASS J, 6AMPS
6	1	*1	CH60J2	BUSSMANN	2 POLE FUSE BLOCK - CLASS J - 60A
14		*4	JDL60	EDISON	TIME DELAY FUSE - CLASS J - 60A
8	1	*1	CHCC3DU	BUSSMANN	3 POLE FUSE BLOCK - CLASS CC - 30A
11		*6	LP-CC-3	BUSSMANN	TIME DELAY FUSE - CLASS CC - 3A
8	1	*1	CHCC3DU	BUSSMANN	3 POLE FUSE BLOCK - CLASS CC - 30A
10		*6	LP-CC-20	BUSSMANN	TIME DELAY FUSE - CLASS CC - 20A
19	2	*1	MPDB67113	FERRAZ	ALUMINIUM DISTRIBUTION BLOCK, 3POLE, 12 OPENINGS PER POLE, 135AMPS
21		*3	MPDBC6667	FERRAZ	PLASTIC HINGED SAFETY COVER FOR MPDB67 SERIES
29	1		A42P36	HOFFMAN	BACK PLATE 42X36
30	1	*1	A42H3612SSLP3PT	HOFFMAN	CONTINUOUS HINGE WITH 3-POINT LATCH HANDLE, WALL MOUNT ENCLOSURE, 42X36X12, TYPE 4X, SS304
31		*1	AGS808	HOFFMAN	GROUND STRAP
46	1		CLMAR2/0-14-Q	PANDUIT	COPPER GROUND LUG, 14AWG-2/0AWG
48	1		UGB2/0-414-12	PANDUIT	COPPER GROUND BAR, 12-PORT, 14AWG-4AWG
56	1	*1	GS2MU3N	SCHNEIDER	TESYS GS, FUSED DISCONNECT SWITCH 3POLE, 200AMPS, FUSE CLASS J
52		*1	GS1AW403	SCHNEIDER	TERMINAL LUGS KIT (6), 6-300KCMIL, 200A
55		*2	GS2AP43	SCHNEIDER	TESYS GS, TERMINAL SHROUDS, 200A, 3 POLE
13		*6	JDL125	EDISON	TIME DELAY FUSE - CLASS J - 125A
54		*1	GS2AH440	SCHNEIDER	TESYS GS, RED EXTERNAL FRONTAL ROTARY HANDLE FOR USE WITH DISCONNECT SWITCH 100-400A, NEMA4/4X
53		*1	GS2AE2	SCHNEIDER	TESYS GS, SHAFT EXTENSION, 100-400A, 12-INCH
58	2	*1	GV2P08	SCHNEIDER	TESYS GV2, MOTOR PROTECTION CIRCUIT BREAKER, THERMAL-MAGNETIC, ADJUSTMENT RANGE: 2.5-4A
61		*1	GVAE11	SCHNEIDER	FRONT-MOUNTED AUXILIARY CONTACTS, 1NO-1NC
59	1	*1	GV2P10	SCHNEIDER	TESYS GV2, MOTOR PROTECTION CIRCUIT BREAKER, THERMAL-MAGNETIC, ADJUSTMENT RANGE: 4-6.3A
61		*1	GVAE11	SCHNEIDER	FRONT-MOUNTED AUXILIARY CONTACTS, 1NO-1NC
60	3	*1	GV2P14	SCHNEIDER	TESYS GV2, MOTOR PROTECTION CIRCUIT BREAKER, THERMAL-MAGNETIC, ADJUSTMENT RANGE: 6-10A
61		*1	GVAE11	SCHNEIDER	FRONT-MOUNTED AUXILIARY CONTACTS, 1NO-1NC
63	6	*1	LC1D09G7	SCHNEIDER	TESYS D CONTACTOR, 3-POLE, 9A, COIL 120VAC, 1NO/1NC CONTACT
57		*1	GV2AF3	SCHNEIDER	TESYS GV2, COMBINATION BLOCK, 32A
64	5		M9F42115	SCHNEIDER	1 POLE THERMAL MAGNETIC CIRCUIT BREAKER, 15A, TRIP CURVE C
66	1		M9F42220	SCHNEIDER	2 POLE THERMAL MAGNETIC CIRCUIT BREAKER, 20A, TRIP CURVE C
67	1		M9F42230	SCHNEIDER	2 POLE THERMAL MAGNETIC CIRCUIT BREAKER, 30A, TRIP CURVE C
69	1		M9F43104	SCHNEIDER	1 POLE THERMAL MAGNETIC CIRCUIT BREAKER, 4A, TRIP CURVE D
79	3		DRS35X7.5S	TECHSPAN	TRACK 35mmX7.5mmX1219mm
80	3		ADR21	THOMAS & BETTS	ALUMINUM GROUND LUG, 14-2/0AWG
83	1	*1	TYD1X4NPG6	THOMAS & BETTS	WIRING DUCT 1X4" GRAY
81		*1	TYD1CPG6	THOMAS & BETTS	WIRING DUCT COVER 1" GRAY
87	1	*1	TYD2X4NPG6	THOMAS & BETTS	WIRING DUCT 2X4" GRAY
85		*1	TYD2CPG6	THOMAS & BETTS	WIRING DUCT COVER 2" GRAY
93	8		2002-1201	WAGO	SINGLE DECK TERMINAL BLOCK, SPRING CLAMP, 24A, 22-12AWG, GRAY
95	2		2002-1292	WAGO	FEED-TROUGH END BARRIER FOR 2002-1201 TERMINAL BLOCK
102	11		249-116	WAGO	SCREWLESS END RETAINER

NOTE:

THE INFORMATION, SPECIFICATIONS AND DATA SHOWN ON THIS PRINT ARE FURNISHED BY AND ARE TO REMAIN THE PROPERTY OF H_2O INNOVATION.

THE PURPOSE OF THIS DOCUMENT IS TO FACILITATE THE INSTALLATION, MAINTENANCE AND OPERATION OF THE EQUIPMENT REPRESENTED BY SAID PRINT. NO OTHER USE OF THIS DOCUMENT SHALL BE MADE WITHOUT EXPRESS WRITTEN CONSENT FROM H_2O INNOVATION.

NO.	DATE	REVISION	DWN BY	ENGINEER	CHK'D BY
.00	22/07/2020	AS-BUILT	P.L.D.		

h2o innovation
knowledge to share all around the globe

DWG TITLE
MELIADINE STP EXPANSION
CONTAINERIZED SEWAGE
TREATMENT PLANT
ELECTRICAL DRAWINGS

PP-103
POWER PANEL
BILL OF MATERIAL

JOB NO: 20C1131

DWG NO: 20C1131-E02-PP103-BOM

SHEET NO: 4 OF 11

REVISION: .00

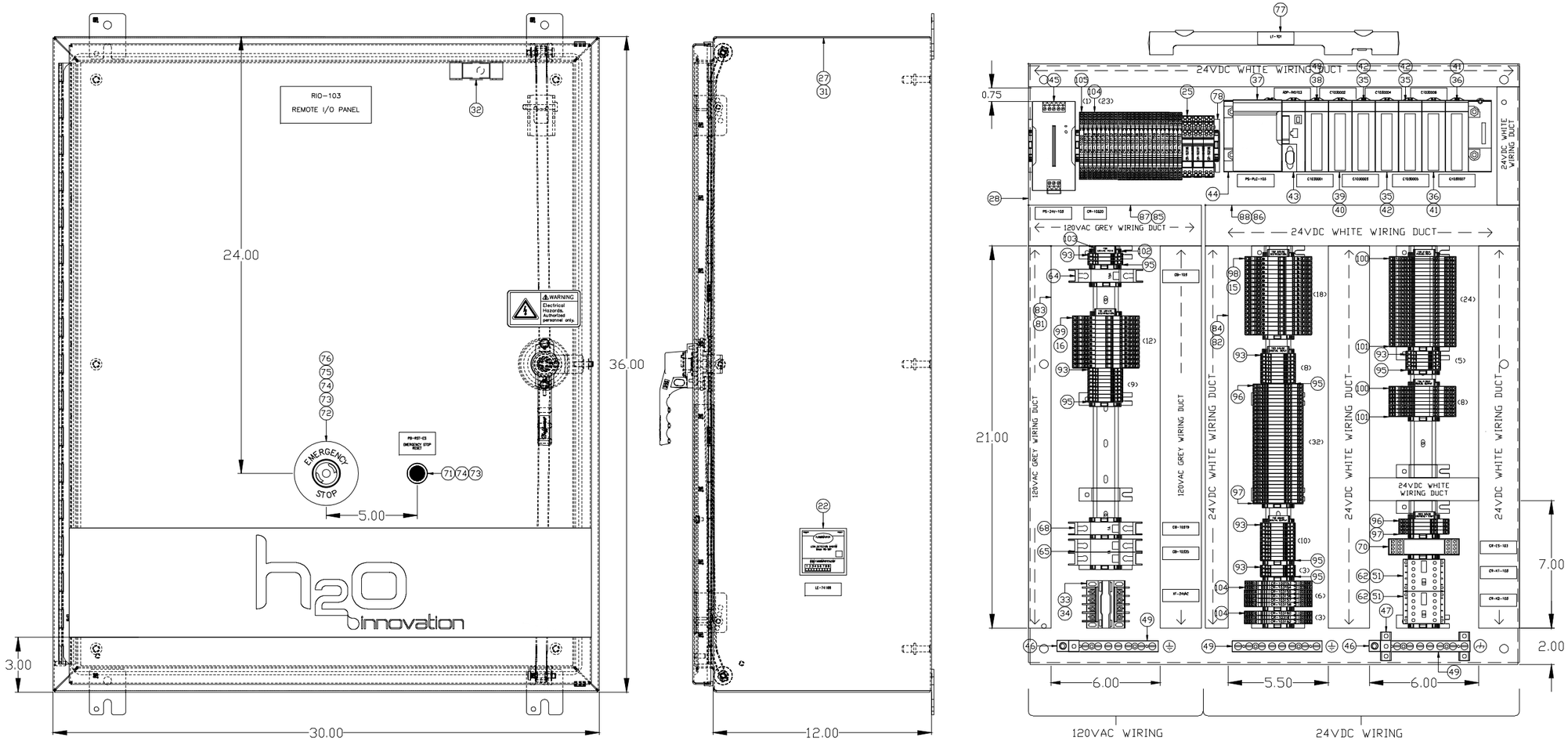

NOTE 1: THIS PANEL WILL BE INSTALLED ON WALL (CONTAINER #3)

NOTE 2: ALL CONNECTIONS WILL BE THROUGH THE BOTTOM

NOTE 3: THIS PANEL APPROX. WEIGHT 150 LBS

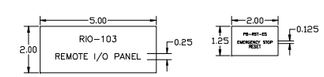

- ADHESIVE BACKED LAMINATED PLASTIC
- BLACK LETTERING ON WHITE BACKGROUND
- THICKNESS 1/16"

NOTE:

THE INFORMATION, SPECIFICATIONS AND DATA SHOWN ON THIS PRINT ARE FURNISHED BY AND ARE TO REMAIN THE PROPERTY OF H_2O INNOVATION.

THE PURPOSE OF THIS DOCUMENT IS TO FACILITATE THE INSTALLATION, MAINTENANCE AND OPERATION OF THE EQUIPMENT REPRESENTED BY SAID PRINT. NO OTHER USE OF THIS DOCUMENT SHALL BE MADE WITHOUT EXPRESS WRITTEN CONSENT FROM H_2O INNOVATION.

NO.	DATE	REVISION	DWN BY	ENGINEER	CHK'D BY
.00	22/07/2020	AS-BUILT	P.L.D.		

h2O innovation
knowledge to share.du savoir-à partager

DWG TITLE
MELIADINE STP EXPANSION
CONTAINERIZED SEWAGE TREATMENT PLANT
ELECTRICAL DRAWINGS

RIO-103
REMOTE I/O PANEL
PANEL LAYOUT

JOB NO
20C1131

DWG NO
20C1131-E02-RIO103-PL

SHEET NO
5 OF 11

REVISION
.00

ITEM	QTY	SUB	CATALOG	MFG	DESCRIPTION
1	1		1492-REC15	AB	RAIL MOUNTED RECEPTACLE 125V 15A #18-14AWG
22	1		RS-097	FLOODMASTER	LEAK DETECTION ALARM SYSTEM, 120VAC
27	1	*1	A36H3012SS6LP3PT	HOFFMAN	CONTINUOUS HINGE WITH 3-POINT LATCH HANDLE, WALL MOUNT ENCLOSURE, 36X30X12, TYPE 4X, SS316
31		*1	AGS808	HOFFMAN	GROUND STRAP
28	1		A36P30	HOFFMAN	BACK PLATE 36X30
32	1		ALFSWD	HOFFMAN	DOOR ACTIVATED SWITCH
33	1	*1	SP50PR	HPS	TRANSFORMER 120-240VAC TO 12-24VAC, 50VA
34		*2	SPFG1	HPS	FINGER GUARD FOR TRANSFORMER
35	3	*1	BMXAMI0810	MODICON	M340 8 CHANNEL ISOLATED ANALOG INPUT MODULE
42		*1	BMXFTW308S	MODICON	FTB 28-WIRE 3METER SHIELDED CABLE
36	2	*1	BMXAMO0410	MODICON	M340 4 CHANNEL ANALOG OUTPUT MODULE
41		*1	BMXFTW301S	MODICON	FTB 20-WIRE 3METER SHIELDED CABLE
37	1		BMXCPS3500	MODICON	PLC MODICON M340 POWER SUPPLY MODULE, 100-240 VAC
38	1	*1	BMXDDI3202K	MODICON	M340 DISCRETE INPUT MODULE, 32 INPUTS, 24VDC
40		*1	BMXFCW303	MODICON	FCN 2 X 20-WIRE 3METER CABLE
39	1	*1	BMXDDO3202K	MODICON	M340 DISCRETE OUTPUT MODULE, 32 OUTPUTS, 24VDC
40		*1	BMXFCW303	MODICON	FCN 2 X 20-WIRE 3METER CABLE
43	1		BMXPRA0100	MODICON	PERIPHERAL REMOTE IO ADAPTER, CONTROLLER, ETHERNET
44	1		BMXXBP0800	MODICON	M340 PLC RACK, 8 SLOTS
45	1		S8VK-C24024	OMRON	POWER SUPPLY 100-240VAC/24VDC, 240W, 10A
46	2		CLMAR2/0-14-Q	PANDUIT	COPPER GROUND LUG, 14AWG-2/0AWG
47	1		UGB-IN-SO	PANDUIT	GROUND BAR INSULATION STAND-OFFS (2)
49	3		UGB2/0-414-6	PANDUIT	COPPER GROUND BAR, 6-PORT, 14AWG-4AWG
51	2	*1	CA3KN22BD	SCHNEIDER	TESYS K CONTROL RELAY, 2 NO/2 NC CONTACTS, 24VDC
62		*1	LA1KN40	SCHNEIDER	TESYS K FRONT-MOUNTED AUXILIARY CONTACTS BLOCK, 4 NO
64	1		M9F42115	SCHNEIDER	1 POLE THERMAL MAGNETIC CIRCUIT BREAKER, 15A, TRIP CURVE C
65	3		M9F42201	SCHNEIDER	2 POLE THERMAL MAGNETIC CIRCUIT BREAKER, 1A, TRIP CURVE C
68	1		M9F43101	SCHNEIDER	1 POLE THERMAL MAGNETIC CIRCUIT BREAKER, 1A, TRIP CURVE D
70	1		XPSUAF13AP	SCHNEIDER	SAFETY MONITORING RELAY, DUAL CHANNEL, 24VAC/DC
71	1	*1	ZB5AA9	SCHNEIDER	PLASTIC PUSH BUTTON 22MM, 6 COLOURED CAPS
74		*1	ZBE101	SCHNEIDER	CONTACT BLOCK N.O. , 22MM
73		*1	ZB5AZ009	SCHNEIDER	ZB5 PLASTIC MOUNTING LATCH
72	1	*1	ZB5AW743	SCHNEIDER	E-STOP ILLUMINATED PLASTIC PUSH BUTTON - MUSHROOM (TWIST-TO-RELEASE)
73		*1	ZB5AZ009	SCHNEIDER	ZB5 PLASTIC MOUNTING LATCH
74		*2	ZBE101	SCHNEIDER	CONTACT BLOCK N.O. , 22MM
75		*1	ZBVB1	SCHNEIDER	WHITE LED MODULE, 24VAC/DC
76		*1	ZBY9320	SCHNEIDER	EMERGENCY STOP LEGEND PLATE, YELLOW, 22.5MM (ENGLISH DESCRIPTION)
77	1		02540.1-11	STEGO	LED LIGHT BAR 14 INCHES, 24VDC, 5 WATTS, 400 LUMENS
78	16		CA803	TECHSPAN	DIN RAIL ELEVATION MOUNTING BRACKET - 2"
79	5		DRS35X7.5S	TECHSPAN	TRACK 35mmX7.5mmX1219mm
83	1	*12	TYD1X4NPG6	THOMAS & BETTS	WIRING DUCT 1X4" GRAY
81		*1	TYD1CPG6	THOMAS & BETTS	WIRING DUCT COVER 1" GRAY
84	1	*6	TYD1X4NPW6	THOMAS & BETTS	WIRING DUCT 1X4" WHITE
82		*1	TYD1CPW6	THOMAS & BETTS	WIRING DUCT COVER 1" WHITE
87	1	*12	TYD2X4NPG6	THOMAS & BETTS	WIRING DUCT 2X4" GRAY
85		*1	TYD2CPG6	THOMAS & BETTS	WIRING DUCT COVER 2" GRAY
88	1	*12	TYD2X4NPW6	THOMAS & BETTS	WIRING DUCT 2X4" WHITE
86		*1	TYD2CPW6	THOMAS & BETTS	WIRING DUCT COVER 2" WHITE
25	3		788-515	WAGO	PLUG-IN TYPE RELAY, DPDT, 120VAC
93	36		2002-1201	WAGO	SINGLE DECK TERMINAL BLOCK, SPRING CLAMP, 24A, 22-12AWG, GRAY
94	1		2002-1207	WAGO	SPRING CLAMP GROUND TERMINAL BLOCK, 24A, GREEN/YELLOW
95	6		2002-1292	WAGO	FEED-TROUGH END BARRIER FOR 2002-1201 TERMINAL BLOCK
96	36		2002-2201	WAGO	DOUBLE DECK SPRING CLAMP TERMINAL BLOCK, GRAY
97	2		2002-2292	WAGO	FEED-TROUGH END BARRIER FOR 2002-2201 TERMINAL BLOCK
98	16	*1	2002-2611/1000-541	WAGO	DOUBLE DECK FUSE DISCONNECT TERMINAL BLOCK, BLOWN FUSE INDICATION, 12-30VDC
16		*2	GGM2	FERRAZ	FUSE - CLASS GGM, 2AMPS
98	2	*1	2002-2611/1000-541	WAGO	DOUBLE DECK FUSE DISCONNECT TERMINAL BLOCK, BLOWN FUSE INDICATION, 12-30VDC
15		*2	GGM1/2	FERRAZ	FUSE - CLASS GGM, 0.5AMPS
99	1	*1	2002-2611/1000-867	WAGO	DOUBLE DECK FUSE DISCONNECT TERMINAL BLOCK, BLOWN FUSE INDICATION, 120VAC
18		*2	GGM6	FERRAZ	FUSE - CLASS GGM, 6AMPS
99	1	*1	2002-2611/1000-867	WAGO	DOUBLE DECK FUSE DISCONNECT TERMINAL BLOCK, BLOWN FUSE INDICATION, 120VAC
17		*2	GGM4	FERRAZ	FUSE - CLASS GGM, 4AMPS
99	10	*1	2002-2611/1000-867	WAGO	DOUBLE DECK FUSE DISCONNECT TERMINAL BLOCK, BLOWN FUSE INDICATION, 120VAC
16		*2	GGM2	FERRAZ	FUSE - CLASS GGM, 2AMPS
100	32		2002-3201	WAGO	TRIPLE DECK SPRING CLAMP TERMINAL BLOCK, GRAY
101	2		2002-3292	WAGO	FEED-TROUGH END BARRIER FOR 2002-3201 TERMINAL BLOCK
102	33		249-116	WAGO	SCREWLESS END RETAINER
103	8		249-119	WAGO	GROUP MARKING CARRIER
104	32		857-304	WAGO	TERMINAL BLOCK RELAY, SPRING CLAMP, SPDT, 24VDC
105	1		857-357	WAGO	TERMINAL BLOCK RELAY, SPRING CLAMP, SPDT, 120VAC

NOTE:

THE INFORMATION, SPECIFICATIONS AND DATA SHOWN ON THIS PRINT ARE FURNISHED BY AND ARE TO REMAIN THE PROPERTY OF H_2O INNOVATION.

THE PURPOSE OF THIS DOCUMENT IS TO FACILITATE THE INSTALLATION, MAINTENANCE AND OPERATION OF THE EQUIPMENT REPRESENTED BY SAID PRINT. NO OTHER USE OF THIS DOCUMENT SHALL BE MADE WITHOUT EXPRESS WRITTEN CONSENT FROM H_2O INNOVATION.

NO.	DATE	REVISION	DWN BY	ENGINEER	CHK'D BY
.00	22/07/2020	AS-BUILT	P.L.D.		

h2o innovation
knowledge to share all around the globe

DWG TITLE
MELIADINE STP EXPANSION
CONTAINERIZED SEWAGE
TREATMENT PLANT
ELECTRICAL DRAWINGS

RIO-103
REMOTE I/O PANEL
BILL OF MATERIAL

JOB NO
20C1131

DWG NO
20C1131-E02-RIO103-BOM

SHEET NO
6 OF 11

REVISION
.00

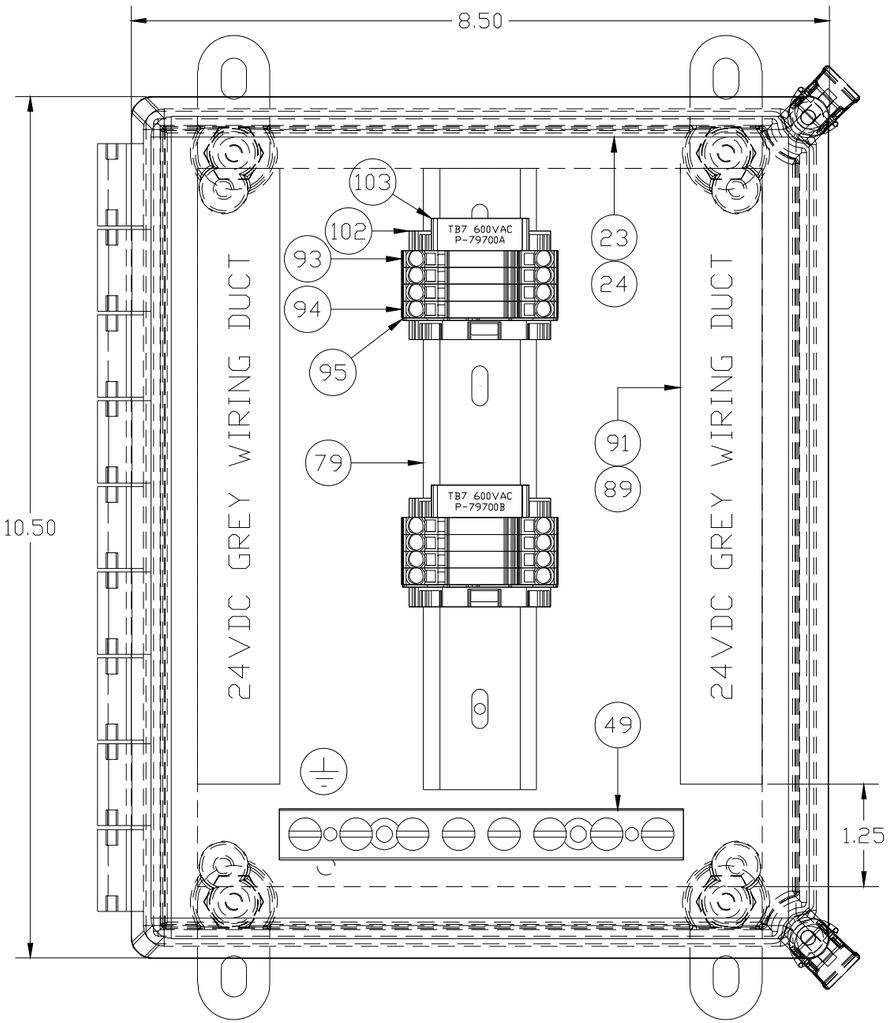

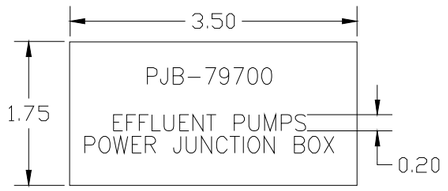

- ADHESIVE BACKED LAMINATED PLASTIC
- BLACK LETTERING ON WHITE BACKGROUND
- THICKNESS 1/16"

NOTE 1: THIS JUNCTION BOX WILL BE INSTALLED ON WALL (CONTAINER #3) CLOSE TO PERMEATE TANK

NOTE 2: ALL CONNECTIONS WILL BE THROUGH THE BOTTOM

NOTE 3: THIS JUNCTION BOX APPROX. WEIGHT 10 LBS

ITEM	QTY	SUB	CATALOG	MFG	DESCRIPTION
23	1	*1	A1086CHQRFG	HOFFMAN	FIBERGLASS CONTINUOUS HINGE TYPE 4X 10X8X6
24		*1	A10P8	HOFFMAN	BACK PLATE 10X8
49	1		UGB2/0-414-6	PANDUIT	COPPER GROUND BAR, 6-PORT, 14AWG-4AWG
79	1		DRS35X7.5S	TECHSPAN	TRACK 35mmX7.5mmX1219mm
91	1	*1	TYD75X15NPG6	THOMAS & BETTS	WIRING DUCT 0.75X1.50" GRAY
89		*1	TYD75CPG6	THOMAS & BETTS	WIRING DUCT COVER 0.75" GRAY
93	6		2002-1201	WAGO	SINGLE DECK TERMINAL BLOCK, SPRING CLAMP, 24A, 22-12AWG, GRAY
94	2		2002-1207	WAGO	SPRING CLAMP GROUND TERMINAL BLOCK, 24A, GREEN/YELLOW
95	2		2002-1292	WAGO	FEED-THROUGH END BARRIER FOR 2002-1201 TERMINAL BLOCK
102	3		249-116	WAGO	SCREWLESS END RETAINER
103	2		249-119	WAGO	GROUP MARKING CARRIER

NOTE:

THE INFORMATION, SPECIFICATIONS AND DATA SHOWN ON THIS PRINT ARE FURNISHED BY AND ARE TO REMAIN THE PROPERTY OF H_2O INNOVATION.

THE PURPOSE OF THIS DOCUMENT IS TO FACILITATE THE INSTALLATION, MAINTENANCE AND OPERATION OF THE EQUIPMENT REPRESENTED BY SAID PRINT. NO OTHER USE OF THIS DOCUMENT SHALL BE MADE WITHOUT EXPRESS WRITTEN CONSENT FROM H_2O INNOVATION.

NO.	DATE	REVISION	DWN BY	ENGINEER	CHK'D BY
.00	22/07/2020	AS-BUILT	P.L.D.		

h2o innovation
knowledge to share all around the globe

DWG TITLE
MELIADINE STP EXPANSION
CONTAINERIZED SEWAGE TREATMENT PLANT
ELECTRICAL DRAWINGS

PJB-79700
POWER JUNCTION BOX
PANEL LAYOUT

JOB NO: 20C1131

DWG NO: 20C1131-E02-PJB79700-PL

SHEET NO: 7 OF 11

REVISION: .00

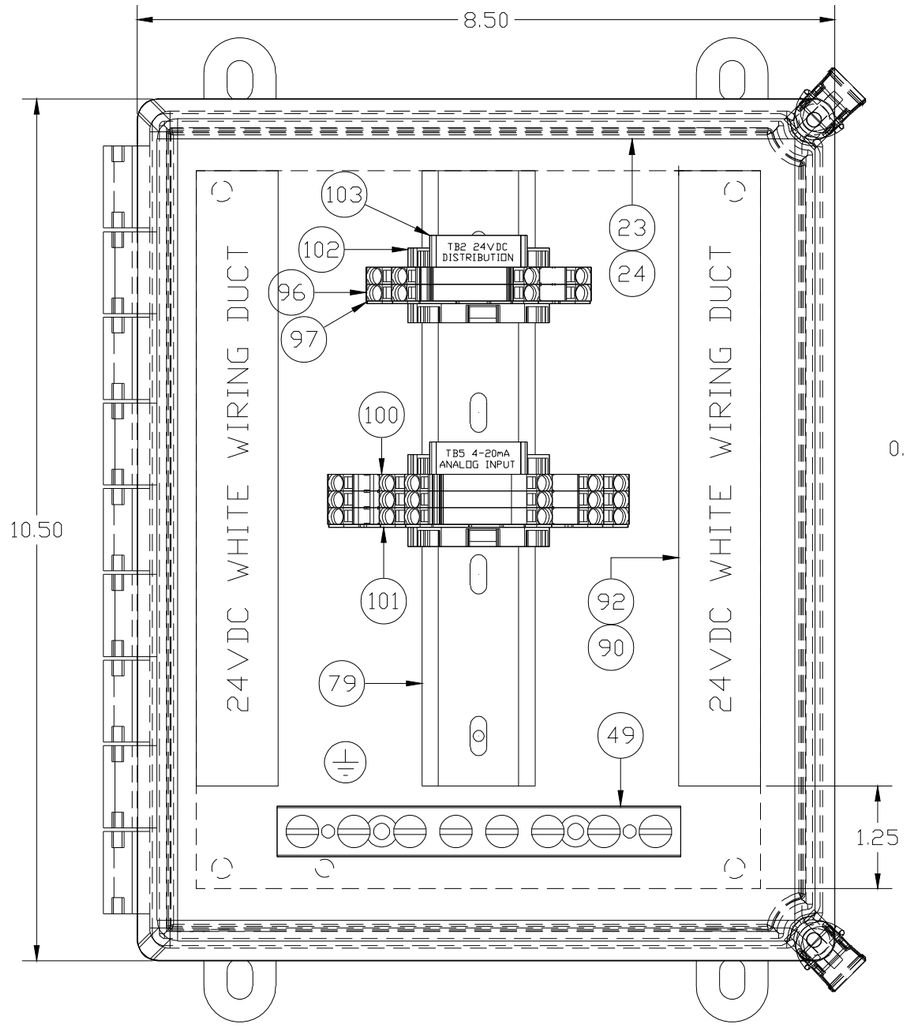

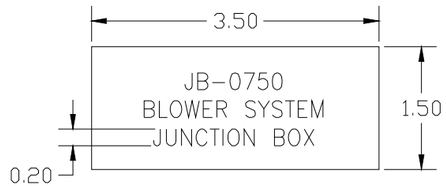

- ADHESIVE BACKED LAMINATED PLASTIC
- BLACK LETTERING ON WHITE BACKGROUND
- THICKNESS 1/16"

NOTE 1: THIS JUNCTION BOX WILL BE INSTALLED ON WALL (CONTAINER #3) CLOSED TO AIR FLOW TRANSMITTER

NOTE 2: ALL CONNECTIONS WILL BE THROUGH THE BOTTOM

NOTE 3: THIS JUNCTION BOX APPROX. WEIGHT 10 LBS

ITEM	QTY	SUB	CATALOG	MFG	DESCRIPTION
23	1	*1	A1086CHQRFG	HOFFMAN	FIBERGLASS CONTINUOUS HINGE TYPE 4X 10X8X6
24		*1	A10P8	HOFFMAN	BACK PLATE 10X8
49	1		UGB2/0-414-6	PANDUIT	COPPER GROUND BAR, 6-PORT, 14AWG-4AWG
79	1		DRS35X7.5S	TECHSPAN	TRACK 35mmX7.5mmX1219mm
92	1	*1	TYD75X15NPW6	THOMAS & BETTS	WIRING DUCT 0.75X1.50" WHITE
90		*1	TYD75CPW6	THOMAS & BETTS	WIRING DUCT COVER 0.75" WHITE
96	2		2002-2201	WAGO	DOUBLE DECK SPRING CLAMP TERMINAL BLOCK, GRAY
97	1		2002-2292	WAGO	FEED-TROUGH END BARRIER FOR 2002-2201 TERMINAL BLOCK
100	3		2002-3201	WAGO	TRIPLE DECK SPRING CLAMP TERMINAL BLOCK, GRAY
101	1		2002-3292	WAGO	FEED-TROUGH END BARRIER FOR 2002-3201 TERMINAL BLOCK
102	4		249-116	WAGO	SCREWLESS END RETAINER
103	2		249-119	WAGO	GROUP MARKING CARRIER

NOTE:

THE INFORMATION, SPECIFICATIONS AND DATA SHOWN ON THIS PRINT ARE FURNISHED BY AND ARE TO REMAIN THE PROPERTY OF H_2O INNOVATION.

THE PURPOSE OF THIS DOCUMENT IS TO FACILITATE THE INSTALLATION, MAINTENANCE AND OPERATION OF THE EQUIPMENT REPRESENTED BY SAID PRINT. NO OTHER USE OF THIS DOCUMENT SHALL BE MADE WITHOUT EXPRESS WRITTEN CONSENT FROM H_2O INNOVATION.

NO.	DATE	REVISION	DWN BY	ENGINEER	CHK'D BY
.00	22/07/2020	AS-BUILT	P.L.D.		

h2o innovation
knowledge to share.all sewer+partage

DWG TITLE
MELIADINE STP EXPANSION
CONTAINERIZED SEWAGE
TREATMENT PLANT
ELECTRICAL DRAWINGS

JB-0750
JUNCTION BOX
PANEL LAYOUT

JOB NO
20C1131

DWG NO
20C1131-E02-JB0750-PL

SHEET NO
8 OF 11

REVISION
.00

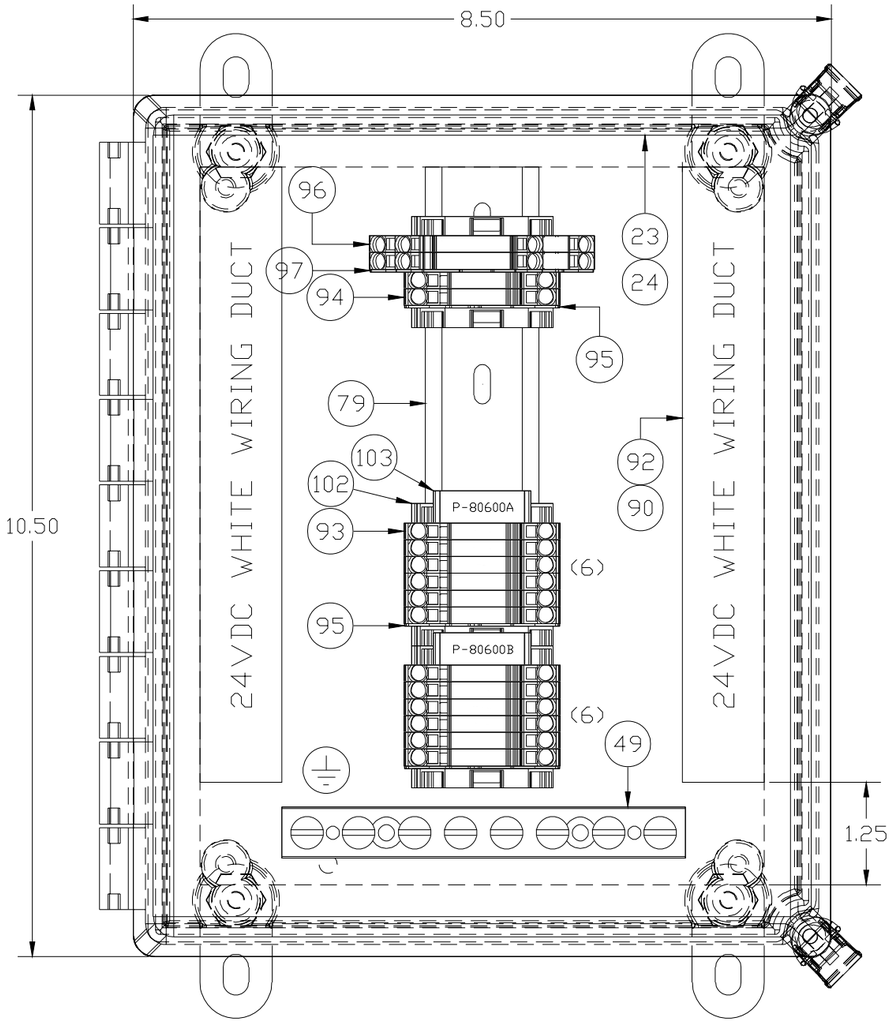

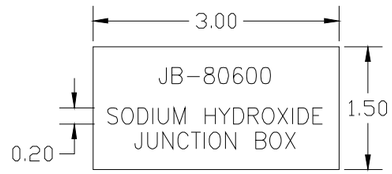

- ADHESIVE BACKED LAMINATED PLASTIC
- BLACK LETTERING ON WHITE BACKGROUND
- THICKNESS 1/16"

NOTE 1: THIS JUNCTION BOX WILL BE INSTALLED ON SODIUM HYDROXIDE DOSING SKID (CONTAINER #3)

NOTE 2: ALL CONNECTIONS WILL BE THROUGH THE BOTTOM

NOTE 3: THIS JUNCTION BOX APPROX. WEIGHT 10 LBS

ITEM	QTY	SUB	CATALOG	MFG	DESCRIPTION
23	1	*1	A1086CHQRFG	HOFFMAN	FIBERGLASS CONTINUOUS HINGE TYPE 4X 10X8X6
24		*1	A10P8	HOFFMAN	BACK PLATE 10X8
49	1		UGB2/0-414-6	PANDUIT	COPPER GROUND BAR, 6-PORT, 14AWG-4AWG
79	1		DRS35X7.5S	TECHSPAN	TRACK 35mmX7.5mmX1219mm
92	1	*1	TYD75X15NPW6	THOMAS & BETTS	WIRING DUCT 0.75X1.50" WHITE
90		*1	TYD75CPW6	THOMAS & BETTS	WIRING DUCT COVER 0.75" WHITE
93	14		2002-1201	WAGO	SINGLE DECK TERMINAL BLOCK, SPRING CLAMP, 24A, 22-12AWG, GRAY
95	2		2002-1292	WAGO	FEED-TROUGH END BARRIER FOR 2002-1201 TERMINAL BLOCK
96	2		2002-2201	WAGO	DOUBLE DECK SPRING CLAMP TERMINAL BLOCK, GRAY
97	1		2002-2292	WAGO	FEED-TROUGH END BARRIER FOR 2002-2201 TERMINAL BLOCK
102	6		249-116	WAGO	SCREWLESS END RETAINER
103	3		249-119	WAGO	GROUP MARKING CARRIER

NOTE:

THE INFORMATION, SPECIFICATIONS AND DATA SHOWN ON THIS PRINT ARE FURNISHED BY AND ARE TO REMAIN THE PROPERTY OF H_2O INNOVATION.

THE PURPOSE OF THIS DOCUMENT IS TO FACILITATE THE INSTALLATION, MAINTENANCE AND OPERATION OF THE EQUIPMENT REPRESENTED BY SAID PRINT. NO OTHER USE OF THIS DOCUMENT SHALL BE MADE WITHOUT EXPRESS WRITTEN CONSENT FROM H_2O INNOVATION.

NO.	DATE	REVISION	DWN BY	ENGINEER	CHK'D BY
.00	22/07/2020	AS-BUILT	P.L.D.		

DWG TITLE
MELIADINE STP EXPANSION
CONTAINERIZED SEWAGE TREATMENT PLANT
ELECTRICAL DRAWINGS

JB-80600
JUNCTION BOX
PANEL LAYOUT

JOB NO: 20C1131

DWG NO: 20C1131-E02-JB80600-PL

SHEET NO: 9 OF 11

REVISION: .00

① - REMOVABLE PANELS FOR EASY ACCESS TO TERMINALS

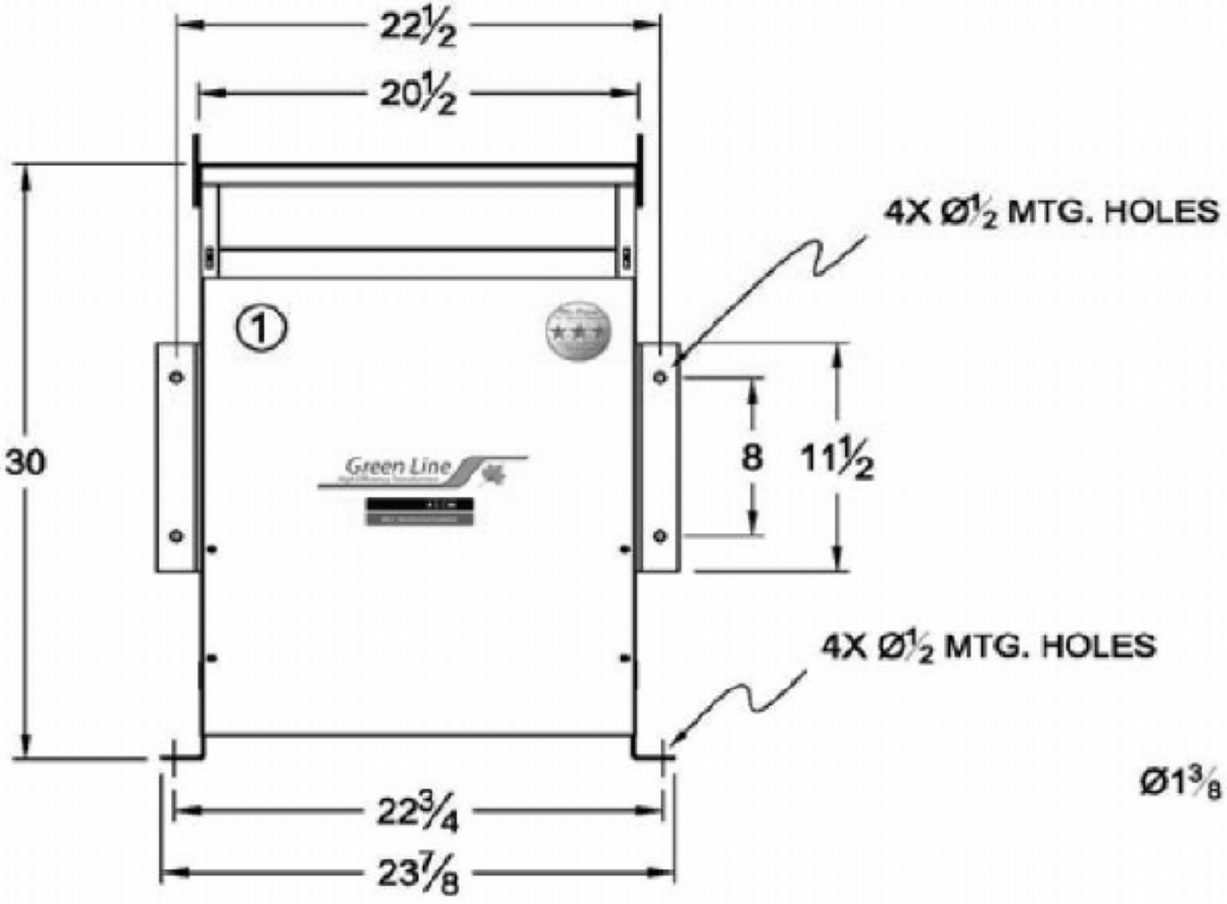

FRONT VIEW

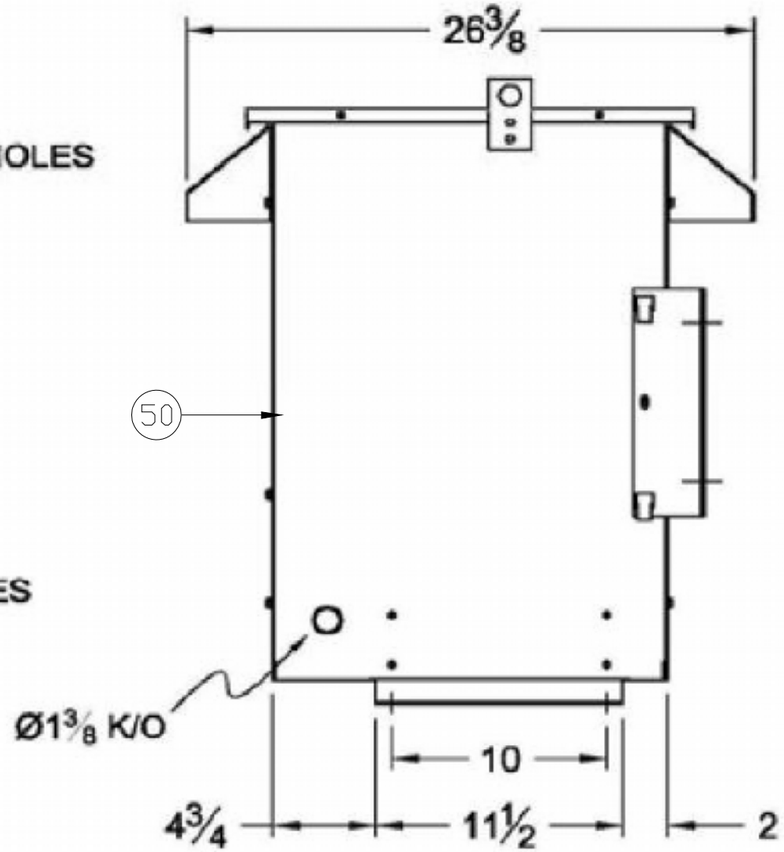

SIDE VIEW

NOTE 1: THIS TRANSFORMER WILL BE INSTALLED ON WALL (CONTAINER #3)

NOTE 2: THIS JUNCTION BOX APPROX. WEIGHT 205 LBS

ITEM	QTY	SUB	CATALOG	MFG	DESCRIPTION
50	1		SA25JKE3RZ3	REX	TRANSFORMER 600/120-240VAC, 1PH, TYPE 3R, 25KVA

NOTE:

THE INFORMATION, SPECIFICATIONS AND DATA SHOWN ON THIS PRINT ARE FURNISHED BY AND ARE TO REMAIN THE PROPERTY OF H_2O INNOVATION.

THE PURPOSE OF THIS DOCUMENT IS TO FACILITATE THE INSTALLATION, MAINTENANCE AND OPERATION OF THE EQUIPMENT REPRESENTED BY SAID PRINT. NO OTHER USE OF THIS DOCUMENT SHALL BE MADE WITHOUT EXPRESS WRITTEN CONSENT FROM H_2O INNOVATION.

NO.	DATE	REVISION	DWN BY	ENGINEER	CHK'D BY
.00	22/07/2020	AS-BUILT	P.L.D.		

h2o innovation

DWG TITLE

MELIADINE STP EXPANSION
CONTAINERIZED SEWAGE TREATMENT PLANT
ELECTRICAL DRAWINGS

XF-103
BUILDING TRANSFORMER PANEL LAYOUT

JOB NO: 20C1131

DWG NO: 20C1131-E02-XF103-PL

SHEET NO: 10 OF 11

REVISION: .00

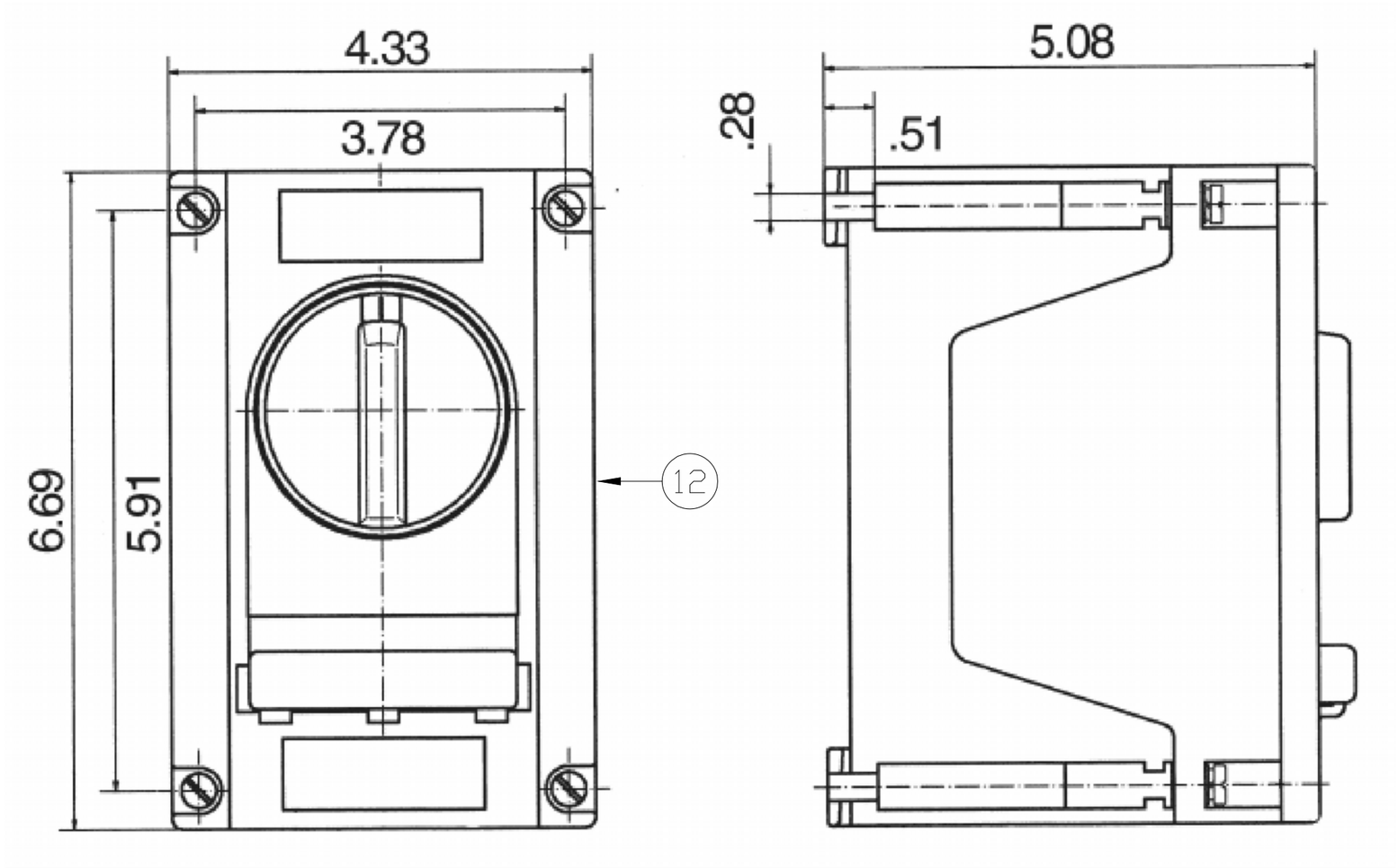

NOTE 1: THIS LOCAL DISCONNECT SWITCH WILL BE INSTALLED IN THE CLASSIFIED AREA

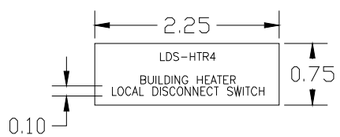

- ADHESIVE BACKED LAMINATED PLASTIC
- BLACK ENGRAVED LETTERING ON WHITE BACKGROUND
- THICKNESS 1/16"

ITEM	QTY	SUB	CATALOG	MFG	DESCRIPTION
12	1		GHG 262 2301 L0003	CROUSE-HINDS	FIBERGLASS EXPLOSION PROOF NON-FUSED DISCONNECT SWITCH, 20A, 3 POLE, CLASS 1 DIVISION 1

NOTE:

THE INFORMATION, SPECIFICATIONS AND DATA SHOWN ON THIS PRINT ARE FURNISHED BY AND ARE TO REMAIN THE PROPERTY OF H_2O INNOVATION.

THE PURPOSE OF THIS DOCUMENT IS TO FACILITATE THE INSTALLATION, MAINTENANCE AND OPERATION OF THE EQUIPMENT REPRESENTED BY SAID PRINT. NO OTHER USE OF THIS DOCUMENT SHALL BE MADE WITHOUT EXPRESS WRITTEN CONSENT FROM H_2O INNOVATION.

NO.	DATE	REVISION	DWN BY	ENGINEER	CHK'D BY
.00	22/07/2020	AS-BUILT	P.L.D.		

DWG TITLE
MELIADINE STP EXPANSION
CONTAINERIZED SEWAGE TREATMENT PLANT
ELECTRICAL DRAWINGS

LDS-HTR4
LOCAL DISCONNECT SWITCH
PANEL LAYOUT

JOB NO: 20C1131

DWG NO: 20C1131-E02-LDSHTR4-PL

SHEET NO: 11 OF 11

REVISION: .00

SECTION 10 - APPENDICES

10.1 - EQUIPMENT MAINTENANCE LOG

GENERAL MAINTENANCE LOG – EQUIPMENT TAG :					
Date	**Time**	**Problem[1]**	**Task Performed**	**Remarks**	**Initials**

Notes: 1. Was this repair planned or unscheduled? Is it a recurring event?

J04

MELIADINE STP EXPANSION

Manufacturers' Operation and Maintenance Manuals

20C1131-J04-0002,00

Pierre-Carl Pépin
05/12/2020

TABLE OF CONTENTS

ABB – Pressure Transmitters ..... TAB A-1
ABB – Turbidity Analysers ..... TAB A-2
Advantage – Tankless Heaters ..... TAB A-3
AMT Gorman Rupp – Sewage Pumps ..... TAB A-4
Burkert – Solenoid Valves ..... TAB B-1
Chemline – Backpressure Relief Valves ..... TAB C-1
Chemline – Ball Valves ..... TAB C-2
Chemline – Gate Valves ..... TAB C-3
Chemline – Electric Actuators ..... TAB C-4
Chemline – Needle Valves ..... TAB C-5
Chemline – Gauge Isolators ..... TAB C-6
Chemline – Sample Valves ..... TAB C-7
Endress + Hauser – Transmitters ..... TAB E-1
Endress + Hauser – pH and ORP Sensors ..... TAB E-2
Endress + Hauser – Memosens Cables ..... TAB E-3
Endress + Hauser – Level Transmitters ..... TAB E-4
Endress + Hauser – Dissolved Oxygen Sensors ..... TAB E-5
Endress + Hauser – Pressure Transmitters ..... TAB E-6
Endress + Hauser – Flowmeters ..... TAB E-7
EDI – Bubble Diffusers ..... TAB E-8
FPZ – Check Valves ..... TAB F-1
FPZ – Regenerative Blowers ..... TAB F-2
FPZ – Safety Valves ..... TAB F-3
Georg Fischer – Ball Valves ..... TAB G-1
Hebdraulique – Hoses ..... TAB H-1
Hydranautics – Membranes ..... TAB H-2
IFM – Cables ..... TAB I-1
IFM – Compressed Air Flowmeters ..... TAB I-2
LVC – Gate Valves ..... TAB L-1

Neotech Acqua – UV Treatment Systems ..... TAB N-1
Opera – Gas Detectors ..... TAB O-1
Praher – Check Valves ..... TAB P-1
Pratt – Knife Gate Valves ..... TAB P-2
Sharpe – Ball Valves ..... TAB S-1
Wika – Pressure Gauges ..... TAB W-1

ABB – PRESSURE TRANSMITTERS

ABB MEASUREMENT & ANALYTICS | OPERATING INSTRUCTION

Pressure transmitter

Models 261GS/GC/GG/GJ/GM/GN/GR
Models 261AS/AC/AG/AJ/AM/AN/AR

Measurement made easy

—
261Gx, 261Ax

Additional Information

Additional documentation on 261Gx, 261Ax is available for download free of charge at www.abb.com/pressure.
Alternatively simply scan this code:

Models 261GS/GC/GG/GJ/GM/GN/GR
Models 261AS/AC/AG/AJ/AM/AN/AR
Pressure transmitter

Operating Instruction
IM/261Gx/Ax-EN

Rev. 08
Issue date: 11.2018

Original instruction

Manufacturer
ABB Automation Products GmbH
Measurement & Analytics
Schillerstr. 72
32425 Minden
Germany
Tel: +49 571 830-0
Fax: +49 571 830-1806

Customer service center
Tel.: +49 180 5 222 580
Fax: +49 621 381 931-29031
automation.service@de.abb.com

Contents

1 Safety 5
1.1 General information and notes for the reader 5
1.2 Intended use 5
1.3 Improper use 5
1.4 Target groups and qualifications 5
1.5 Warranty provisions 5
1.6 Plates and symbols 6
1.6.1 Safety / warning symbols, note symbols 6
1.7 Name plate 6
1.8 Compliance with Pressure Equipment Directive (2014/68/EU) 7
1.9 Transport safety instructions 7
1.10 Storage conditions 7
1.11 Safety instructions for electrical installation 7
1.12 Safety instructions for operation 7
1.13 Returning devices 7
1.14 Integrated management system 8
1.15 Disposal 8
1.15.1 Notice on WEEE Directive 2012/19/EU (Waste Electrical and Electronic Equipment) 8
1.15.2 ROHS Directive 2011/65/EU 8

2 Use in potentially explosive atmospheres 9
2.1 Explosion protection 9
2.2 Type-examination certificate/Declaration of conformity 9
2.3 Type of protection "intrinsic safety Ex i" 9
2.4 Use in areas with combustible dust 9
2.5 Category 3 (EPL Gc) with type of protection "nA" . 9
2.6 Use of handheld terminal / PC 9

3 Function and system design 10
3.1 Operation and system setup 10

4 Mounting 12
4.1 Pressure transmitter 12
4.2 Sealing and screw connections 13
4.3 Moisture 13
4.4 Measuring pipe 14

5 Electrical connections 15
5.1 Cable connection 15
5.2 Electrical connection in the cable connection area 16
5.3 Electrical connection with plug 17
5.3.1 Assembly and connection of Han 8D (8U) socket connector 18
5.4 Protective conductor/Grounding (optional) 18
5.5 Communication setup 18
5.6 Connecting cable 19

6 Commissioning 20
6.1 General remarks 20
6.2 Output signal 20
6.3 Write protection 20
6.4 Adjusting lower range value / oblique sensor 21
6.5 Installing/Removing the LCD indicator 22
6.6 Pressure sensor ventilation 23

7 Configuration, parameterization 24
7.1.1 Standard configuration 24
7.2 Configuration types 24
7.3 Configuration using pushbutton on pressure transmitter 24
7.3.1 General remarks 24
7.3.2 Configuration 24
7.4 Configuration with the LCD indicator 25
7.4.1 Menu navigation 25
7.4.2 Process display 26
7.4.3 Switching to the configuration level (parameterization) 26
7.4.4 Menu structure 27
7.4.5 Parameter descriptions 28
7.5 Configuration with the graphical user interface (DTM) 31
7.5.1 System requirements 31
7.6 Parameter descriptions 31
7.7 Configuration with the PC / laptop or handheld terminal 33
7.8 Configuration with the graphical user interface (DTM) 34
7.8.1 System requirements 34
7.9 Parameter descriptions 34

8 Ex relevant specifications 36
8.1 Hazardous atmospheres 36
8.1.1 ATEX transmitter with ‘intrinsic safety Ex ia/ib’ type of protection in accordance with Directive 2014/34/EU 36
8.1.2 IECEx transmitter with the following types of protection: ‘Intrinsic Safety ia’, ‘non sparking nA’ and ‘dust ignition protection by enclosure tb’ 36
8.1.3 Factory Mutual (FM) 37
8.1.4 Canadian Standards Association (CSA) 37

9 Specification 38
9.1 Functional specifications 38
9.1.1 Measuring range limits and span limits 38
9.1.2 Span limits 38
9.1.3 Zero suppression and elevation 38
9.1.4 Damping 38
9.1.5 Warm-up time 38
9.1.6 Insulation resistance 38
9.2 Operating limits 39
9.2.1 Pressure limits 39
9.2.2 Temperature limits °C (°F) 39
9.2.3 Limits for environmental effects 39
9.3 Measuring accuracy 40
9.3.1 Reference conditions according to IEC 60770 40
9.3.2 Dynamic response (according to IEC 61298-1) .. 40
9.3.3 Measuring error for setting cut-off point 40
9.3.4 Ambient temperature 40
9.3.5 Temperature coefficient (T_K) 40
9.3.6 Power supply 40
9.3.7 Load 40
9.3.8 Electromagnetic fields 40
9.3.9 Mounting position 40
9.3.10 Long-term stability 40
9.3.11 Vibration effect 40

9.3.12 Total performance 41
9.4 Technical specification 41
9.4.1 Materials 41
9.4.2 Calibration 41
9.4.3 Optional extras 41
9.4.4 Process connections 41
9.4.5 Electrical connections 42
9.4.6 Weight 42
9.4.7 Packaging 42
9.5 Mounting dimensions 43
9.5.1 Standard version 43
9.5.2 Version with the options “LCD indicator” and “Harting Han plug” 44
9.5.3 Transmitter with flush diaphragm 45
9.5.4 Version with ball valve connection 46
9.5.5 Mounting with angle bracket (optional) 47

10 Maintenance / Repair 48
10.1 Removal 48

11 Appendix 49
11.1 Approvals and certifications 49

1 Safety

1.1 General information and notes for the reader

These instructions are an important part of the product and must be retained for future reference.
Installation, commissioning, and maintenance of the product may only be performed by trained specialist personnel who have been authorized by the plant operator accordingly. The specialist personnel must have read and understood the manual and must comply with its instructions.
For additional information or if specific problems occur that are not discussed in these instructions, contact the manufacturer.
The content of these instructions is neither part of nor an amendment to any previous or existing agreement, promise or legal relationship.
Modifications and repairs to the product may only be performed if expressly permitted by these instructions.
Information and symbols on the product must be observed. These may not be removed and must be fully legible at all times.
The operating company must strictly observe the applicable national regulations relating to the installation, function testing, repair and maintenance of electrical products.

1.2 Intended use

261A pressure transmitters measure absolute pressure and 261G pressure transmitters gauge pressure or the level of gases, vapors and liquids.
For information on measuring ranges and permissible overload, refer to the section "Specifications".

Using these products as intended includes compliance with the following points:

- Read and follow the instructions in this manual
- The technical limit values must be complied with (refer to the section “Technical data").

1.3 Improper use

The following are considered to be instances of improper use of the device:

- For operating as a flexible adapter in piping, e.g. for compensating pipe offsets, pipe vibrations, pipe expansions, etc.
- For use as a climbing aid, e.g. for mounting purposes
- For use as a support for external loads, e.g. as a support for piping, etc.
- Material application, e.g. by painting over the housing, name plate or welding/soldering on parts.
- Material removal, e.g. by spot drilling the housing.

1.4 Target groups and qualifications

Installation, commissioning and maintenance of the product may only be performed by trained specialist personnel who have been authorized by the plant operator to do so. The specialist personnel must have read and understood the manual and comply with its instructions.
The operators must strictly observe the applicable national regulations with regards to installation, function tests, repairs, and maintenance of electrical products.

1.5 Warranty provisions

Using the device in a manner that does not fall within the scope of its intended use, disregarding this manual, using underqualified personnel, or making unauthorized alterations releases the manufacturer from liability for any resulting damage. This renders the manufacturer's warranty null and void.

1.6 Plates and symbols

1.6.1 Safety / warning symbols, note symbols

The warnings in these instructions are structured as follows:

⚠ DANGER

The signal word "DANGER" indicates an imminent danger. Failure to observe this information will result in death or severe injury.

⚠ WARNING

The signal word "WARNING" indicates an imminent danger. Failure to observe this information may result in death or severe injury.

⚠ CAUTION

The signal word "CAUTION" indicates an imminent danger. Failure to observe this information may result in minor or moderate injury.

i NOTICE

The signal word "NOTICE" indicates useful or important information about the product.
The signal word "NOTICE" is not a signal word indicating a danger to personnel. The signal word "NOTICE" can also refer to material damage.

1.7 Name plate

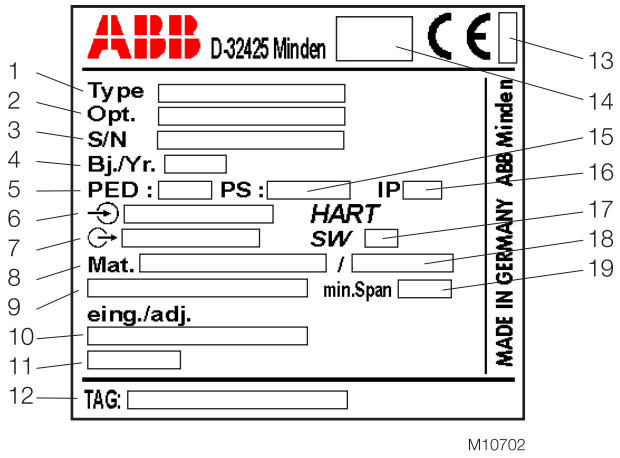

Fig. 1: Name plate for pressure transmitter model 261xx
1 Device type / Order code | 2 Options – additional information on the order code | 3 Device serial number (factory no.) | 4 Year of manufacture | 5 Identification code with reference to the Pressure Equipment Directive (SEP or 1 G) | 6 Power supply | 7 Output signal | 8 Materials that come into contact with the medium | 9 Measuring range lower limit to measuring range upper limit (LRL to URL) | 10 Measuring range, set to ... | 11 HART output (process variable) | 12 Measuring point tag (max. 32 characters) | 13 "SIL2" identification code (optional) | 14 Permissible pressure | 15 Degree of protection | 16 Software version | 17 Filling fluid, if present | 18 Minimum measuring span

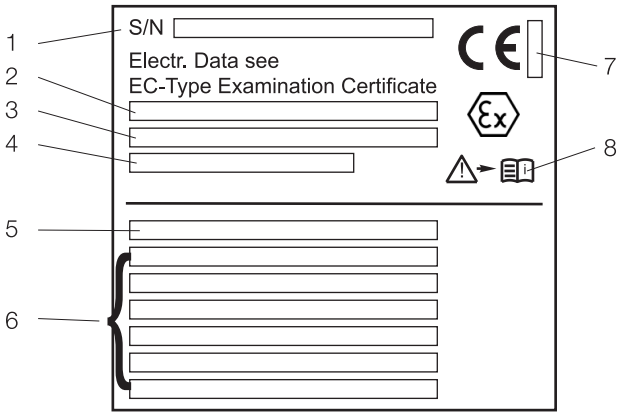

Fig. 2: Additional name plate for devices intended for use in explosion risk areas or for devices with direct mount or remote seals (optional)
1 Serial number (factory no.) | 2 Type of protection | 3 Type of protection (continued) | 4 Number of the EC-type-examination certificate | 5 Order code for direct mount seal | 6 Type of seal, nominal diameter, max. pressure, temperature limits, sealing surface, material, filling fluid | 7 Identification number of the notified body according to ATEX (optional) | 8 Symbol: "Notice". Observe the specifications in the operating instructions and type-examination certificate.

i IMPORTANT (NOTICE)

For information on the individual letters/numbers that make up the order code, please refer to the order confirmation or associated data sheet.
For information about labeling in accordance with the Pressure Equipment Directive, please observe the information in "Compliance with Pressure Equipment Directive".

1.8 Compliance with Pressure Equipment Directive (2014/68/EU)

Devices with PS > 200 bar (20 MPa)

Devices with a permissible pressure of PS > 200 bar (20 MPa) have been tested for conformity by the Technical Supervisory Association TÜV NORD (0045) in accordance with module H and can be used for fluids of group 1 (PED: 1G).
The name plate bears the following identification codes:

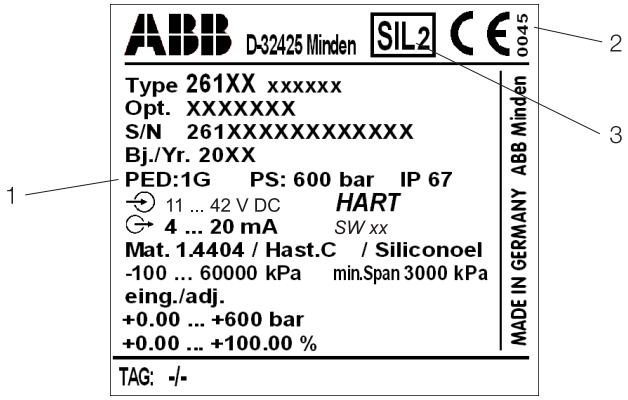

M10704

Fig. 3: Identification codes according to Pressure Equipment Directive (example)

1 PED: 1G | 2 Identification number of the notified body according to the Pressure Equipment Directive | 3 "SIL 2" identification code (optional)

Devices with PS ≤ 200 bar (20 MPa)

Devices with a permissible pressure PS ≤ 200 bar (20 MPa) conform to sec. 3 para. (3) and have not been tested for conformity. The devices have been constructed and manufactured according to sound engineering practice (SEP). The CE marking on the device does not refer to the Pressure Equipment Directive.
The name plate then contains the following identification codes: PED: SEP.

1.9 Transport safety instructions

Observe the following instructions:

- Do not expose the device to humidity during transport. Pack the device accordingly.
- Pack the device so that it is protected against vibrations during transport, e.g., by using air-cushioned packaging.

Prior to installation, check the devices for possible damage that may have occurred as a result of improper transport. Details of any damage that has occurred in transit must be recorded on the transport documents. All claims for damages must be submitted to the shipper without delay and before installation.

1.10 Storage conditions

- The device must be stored in dry and dust-free conditions. Always keep the device in its original package during storage / transport.
- Observe the permissible ambient conditions for transport and storage according to the chapter “Technical Data”.
- In principle, the devices may be stored for an unlimited period. However, the warranty conditions stipulated in the order confirmation of the supplier apply.

1.11 Safety instructions for electrical installation

The electrical connection may only be established by authorized specialist personnel and in accordance with the connection diagrams.
The electrical connection information in this manual must be observed; otherwise, the IP rating may be adversely affected.
Ground the measurement system according to requirements.

1.12 Safety instructions for operation

Before switching on the device, make sure that your installation complies with the environmental conditions listed in the chapter “Technical Data” or on the data sheet.
If there is a chance that safe operation is no longer possible, take the device out of operation and secure it against unintended startup.

1.13 Returning devices

Use the original packaging or a secure transport container of an appropriate type if you need to return the device for repair or recalibration purposes. Fill out the return form (see the Appendix) and include this with the device.
According to the EU Directive governing hazardous materials, the owner of hazardous waste is responsible for its disposal or must observe the following regulations for shipping purposes: All devices delivered to ABB must be free from any hazardous materials (acids, alkalis, solvents, etc.).

Please contact Customer Center Service acc. to page 2 for nearest service location.

1.14 Integrated management system

ABB Automation Products GmbH operates an integrated management system, consisting of:

- ISO 9001 Quality management system,
- ISO 14001 Environmental management system,
- BS OHSAS 18001 Occupational health and safety management system and
- Data and information protection management system.

Environmental awareness is an important part of our company policy.
Our products and solutions are intended to have minimum impact on the environment and on people during manufacturing, storage, transport, use, and disposal.
This includes the environmentally-friendly use of natural resources. We conduct an open dialog with the public through our publications.

1.15 Disposal

This product is manufactured from materials that can be recycled by specialist recycling companies.

1.15.1 Notice on WEEE Directive 2012/19/EU (Waste Electrical and Electronic Equipment)

This product and its packaging are manufactured from materials that can be recycled by specialist recycling companies.

Bear the following points in mind when disposing of them:

- As of 8/15/2018, this product falls under the open scope of application of the WEEE Directive 2012/19/EU and relevant national laws (for example, ElektroG - Electrical Equipment Act - in Germany).
- The product must be surrendered to a specialist recycling company. Do not use municipal waste collection points. According to WEEE Directive 2012/19/EU, these may be used for products used in private applications only.
- If it is not possible to dispose of old equipment properly, ABB Service can take receipt of and dispose of returns for a fee.

NOTICE

Products which are marked with the adjacent symbol may not be disposed of as unsorted municipal waste (household waste). They should be taken to a separate collection facility for electric and electronic devices.

1.15.2 ROHS Directive 2011/65/EU

With the Electrical and Electronic Equipment Act (ElektroG) in Germany, the European Directives 2012/19/EU (WEEE) and 2011/65/EU (RoHS) have been implemented into national law. ElektroG defines the products that are subject to regulated collection and disposal or reuse in the event of disposal or at the end of their service life. ElektroG also prohibits the marketing of electrical and electronic equipment that contains certain amounts of lead, cadmium, mercury, hexavalent chromium, polybrominated biphenyls (PBB), and polybrominated diphenyl ethers (PBDE) (also known as hazardous substances with restricted uses).

2 Use in potentially explosive atmospheres

2.1 Explosion protection

Explosion-protection should be conducted in accordance with Directive 2014/34/EU (ATEX).
When installing explosion-proof transmitters (electrical connection, grounding / potential equalization, etc.), observe national regulations, DIN / VDE regulations and explosion-protection directives.
The certified explosion-proof designation for the transmitter is provided on the name plate.

2.2 Type-examination certificate/Declaration of conformity

For transmitters with explosion-proof designs, the EU declaration of conformity and this operating instruction should be complied with. The EC type examination certificates to be applied are available for download online on the ABB website.

2.3 Type of protection "intrinsic safety Ex i"

Only intrinsically safe devices may be installed in the transmitter signal circuit. The signal circuit can be interrupted while the transmitter is in operation (e.g., clamping/unclamping signal lines).
The housing may be opened during operation.
Transmitters with and without remote seals and featuring type of protection "intrinsic safety Ex i" may be directly integrated into the partition separating Zone 0 and Zone 1 (sensor diaphragm in Zone 0, transmitter in Zone1), provided that the power is supplied via an intrinsically safe circuit with type of protection "Ex ia".

2.4 Use in areas with combustible dust

Installation should be performed in accordance with the EN 60079-14 installation regulations.
The transmitter should only be connected using cable glands certified in accordance with Directive 2014/34/EU (ATEX). The cable gland must conform to IP rating IP 67.
The smoldering temperature of the dust must be at least 75 K above the maximum surface temperature of the transmitter.
The maximum surface temperature is 95 °C (203 °F) and is obtained by adding together the maximum ambient temperature (85 °C (185 °F)) and the maximum self-heating (10 K).

WARNING! Risk of explosion!
When using remote seals with an anti-stick coating, be aware of the risk of electrostatic discharge (with consideration given to the filling material and transport speed).

2.5 Category 3 (EPL Gc) with type of protection "nA"

The transmitter must be connected using a certified cable gland (not included in scope of delivery). The cable gland must satisfy the requirements of the 'Increased safety Ex e' type of protection in accordance with Directive 2014/34/EU (ATEX). Additionally, the conditions stipulated in the type-examination certificate for the cable gland must be observed.

WARNING! Risk of explosion!
Opening the housing during operation (with the supply voltage switched on) is not permitted.
Opening the cover presents a risk of spark formation and, therefore, explosion.
Only open the housing when the supply voltage is switched off.

2.6 Use of handheld terminal / PC

If a handheld terminal or a PC is being used for communication / configuration / parameterization in a potentially explosive atmosphere with type of protection "intrinsic safety", the devices used must be certified accordingly.
This applies even if the device is only connected for a short period of time. This proof of "intrinsic safety" must be supplied in addition to the transmitter.

WARNING! Risk of explosion!
The handheld terminal battery must not be replaced in a potentially explosive atmosphere.
Replacing the battery presents a risk of spark formation and, therefore, explosion.
The battery may only be replaced outside of the potentially explosive atmosphere.

3 Function and system design

Digital pressure transmitters are communication-ready field devices with microprocessor-controlled electronics.
For bidirectional communication, an FSK signal is superimposed on the 4 to 20 mA output signal in accordance with the HART protocol.
The graphic user interface (DTM) can be used to configure, poll, and test the pressure transmitter on a PC. Handheld terminals also support communication.
For 'local' operation, a button is available on the device electronics to set initial value and final value. In combination with an optionally installed LCD indicator, a complete external configuration and parameter setting of the transmitter can be performed via the four local pushbutton controls.
The sturdy electronics housing is made of stainless steel and is resistant to aggressive atmospheres. The process connection is also made of stainless steel or Hastelloy C.
The name plate contains information about the specific pressure transmitter design (see 'Safety / Name plates' chapter).

IMPORTANT (NOTICE)
For explosion-proof designs, the Ex design, or in case of attached diaphragm seals, the corresponding diaphragm seal type, is specified on a separate plate.

In addition, a tag indicating the measuring points may be attached (as an option).

3.1 Operation and system setup

The transmitter has a compact design and comprises the pressure measuring cell and electronic unit with pushbutton control. Depending on the measuring range and measured variable, a silicon pressure sensor is used.

Silicon pressure sensor

In case of silicon pressure sensors, the pressure is transferred via the separation diaphragm and the filling fluid to the measuring diaphragm. The resistance values of the four piezo resistors doped in the measuring diaphragm will change.

This pressure-proportional, internal output voltage is converted via the electronic unit into a scaled electrical signal. Depending on the model, the transmitter is connected to the process by means of a spigot G ½ B (DIN EN 837-1), ½-14 NPT male or female thread, flush diaphragm with special thread G ½" for, e.g., ball valve connection or different pressure sensors.
The pressure transmitter operates on the basis of two-wire technology. The same lines are used for the operating voltage (device-specific, see 'Specification' chapter) and the standardized output signal. The electrical connection is established via a cable entry or plug.

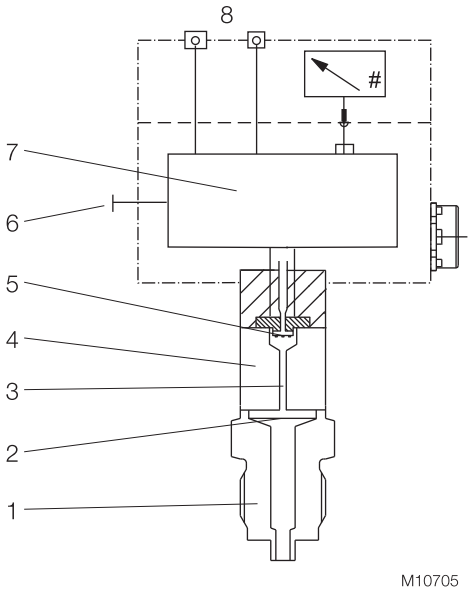

Fig. 4: 261G transmitter for pressure and level (example)
1 Process connection | 2 Separation diaphragm | 3 Filling fluid | 4 Measuring cell | 5 Pressure sensor | 6 Pushbutton for lower / upper range values | 7 Microprocessor-controlled electronics | 8 Output / Power supply

To measure the output signal and configure / calibrate the pressure transmitter, an ampere meter must be connected directly to the output circuit.
The lower and upper range values can be set via a pushbutton on the electronic unit.
An optional fastener is available for attaching a stainless steel tag so that the measuring points can be indicated.
The transmitter may also be equipped with an LCD indicator that can be read from above (optional, can be retrofitted). With the aid of this LCD indicator, the transmitter and its most important functions / data can be fully configured using the 'local' control unit (four operating buttons on the indicator -see 'Configuration' chapter).

4 Mounting

Before installing the transmitter, check whether the device design meets the requirements of the measuring point from a measurement technology and safety specifications point of view. This applies in respect of the:

— Measuring range
— Overload resistance
— Temperature
— Explosion protection
— Operating voltage

The suitability of the materials must be checked as regards their resistance to the media. This applies in respect of the:

— Process connection, separating diaphragm, etc.

In addition, the relevant directives, regulations, standards, and accident prevention regulations must be observed (e. g., VDE/VDI 3512, DIN 19210, VBG, Elex V, etc.).
Measurement accuracy is largely dependent on correct installation of the transmitter and, if applicable, the associated impulse line(s).
As far as possible, the measuring setup should be free from critical ambient conditions such as large variations in temperature, vibrations, or shocks.

IMPORTANT (NOTICE)
If unfavorable ambient conditions cannot be avoided for reasons relating to building structure, measurement technology, or other issues, the measurement quality may be affected.
(See ‘Specifications’ chapter).

If a remote seal with capillary tube is installed on the transmitter, the additional operating instructions for remote seals and the related data sheets must be observed.

4.1 Pressure transmitter

The pressure transmitter can be connected directly to the shut-off valve. An angle bracket for wall or pipe mounting (2" pipe) is also available as an accessory.
The pressure transmitter should be installed so that the display and control unit are accessible during installation and connection, as well as retrofitting.
Ideally, the pressure transmitter should be mounted in a vertical position with the process connection pointing downward to prevent subsequent zero position shifts.

IMPORTANT (NOTICE)
If the pressure transmitter is installed at an angle, depending on the measuring range the filling fluid exerts hydrostatic pressure on the measuring diaphragm, resulting in a zero position shift.
The zero point must then be adjusted.

However, in principle the pressure transmitter can be used in any mounting position. It is mounted by following the same guidelines as for a manometer.
For mounting options with an angle bracket, see the section "Specifications".

4.2 Sealing and screw connections

Connecting G ½ B spigot:
For sealing, a flat gasket must be used in accordance with DIN EN 837-1.

NPT threaded connection:
Seal the threads with PTFE or another approved resistant sealant.

Process connection with flush diaphragm:
Prior to mounting the device, install a welded connection or tapped hole according to relevant soldering standards (for process connection and welded connection dimensions, see “Specifications”).

Process connection for ball valve:
An appropriate ball valve connection or weld-in sleeve is required for mounting purposes. In this case, the seal is formed by a cone at the outer end of the process connection (metal/metal). For information on the weld-in sleeve, see “Specifications”.

4.3 Moisture

Use suitable cables and tighten cable glands securely. The transmitter can also be protected against the ingress of moisture by routing the connecting cable downward before securing it. This allows rain and condensation to drip down. This is especially important for installation in outdoor areas and rooms that are exposed to moisture (e.g., due to cleaning processes) or on cooled or heated tanks.

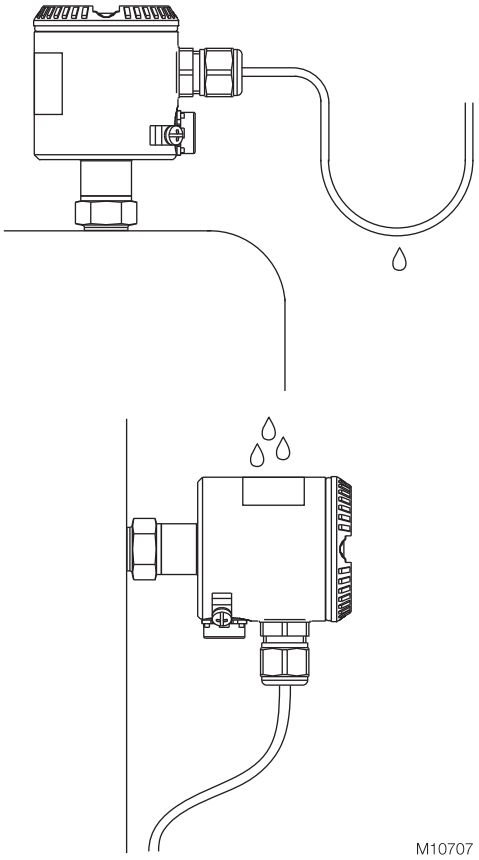

Fig. 5: Steps for preventing the ingress of moisture

4.4 Measuring pipe

In order for the pipes to be laid correctly, the following points must be observed:

— Keep the measuring pipe as short as possible and avoid sharp bends.
— Lay the measuring pipe in such a way that no deposits can accumulate in it. Gradients should not be less than approx. 8 % (ascending or descending).
— The measuring pipe should be blown through with compressed air or, better yet, flushed through with the measuring medium before connection.
— Completely depressurize the measuring pipe if the medium is a fluid.
— Lay the measuring pipe in such a way that gas bubbles (when measuring fluids) or condensate (when measuring gases) can flow back into the process line.
— When measuring steam, lay the measuring pipe in such a way that hot steam cannot flow back into the process connection (water trap, e.g., a water trap pipe that is filled with water before installation).
— Check the tightness of the connection.

5 Electrical connections

WARNING – Electrical dangers!
Observe the applicable regulations governing electrical installation. Connections must only be established in a dead-voltage state. The transmitter has no switch-off elements. Therefore, overcurrent protective devices, lightning protection, or voltage disconnection options must be provided at the plant.
Check that the existing operating voltage corresponds to the voltage indicated on the name plate.
The same lines are used for both the power supply and output signal.

5.1 Cable connection

Depending on the model supplied, the electrical connection is established via cable gland M16x1.5 (for diameters of 5 to 10 mm) or M20x1.5 (for diameters of 6 to 11 mm), a threaded bore for cable gland 1/2-14 NPT, or via the Han 8U plug, i.e., via the miniature plug connector M12 x 1 (see also "Technical specification / Electrical connections").
The screw terminals are suitable for wiring cross-sections up to 1.5 mm^2.
It is recommended that you strip approx. 30 … 35 mm (1.18 … 1.38 inch) off the cable jacket.

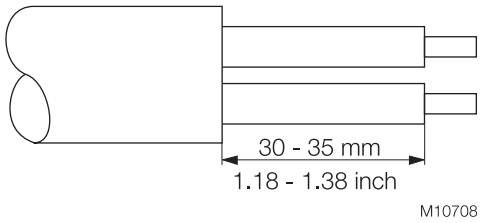

Fig. 6: Stripped connecting cable

IMPORTANT (NOTICE)
After a period of several weeks, removing the screws in the housing cover requires increased force. This is not caused by the threads, but instead is due solely to the type of seal.

5.2 Electrical connection in the cable connection area

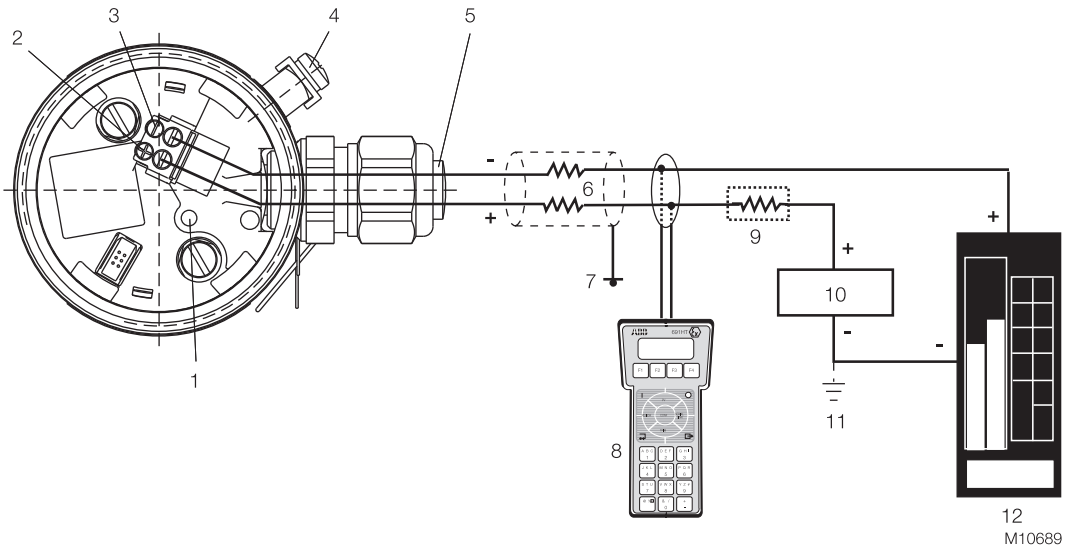

Fig. 7
1 Pushbutton for lower/upper range values | 2 + Signal screw terminals for leads with cross-section of 0.5 ... 1.5 mm² | 3 - Signal screw terminals for leads with a cross-section of 0.5 ... 1.5 mm² | 4 Grounding / equipotential bonding terminal (optional) | 5 Cable entry | 6 Line load | 7 Grounding | 8 Handheld terminal | 9 Resistor (min. 250 Ω) | 10 Power supply / power supply unit | 11 Optional ground | 12 Receiver

application	Permissible voltage range of power supply
Transmitter operated outside the potentially explosive atmosphere.	11 … 42 V
Transmitter operated inside the potentially explosive atmosphere.	11 … max. 30 V (intrinsically safe)

WARNING! Risk of explosion!
If, when using transmitters with type of protection "intrinsic safety", an ammeter is connected to the output circuit or a modem is connected in parallel while there is a risk of explosion, the sums of the capacitances and inductances of all circuits, including the transmitter (see EC-type-examination certificate) must be equal to or less than the permissible capacitances and inductances of the intrinsically safe signal circuit (see EC-type-examination certificate for the power supply unit).
Only passive or explosion-proof devices or indicators may be connected.

5.3 Electrical connection with plug

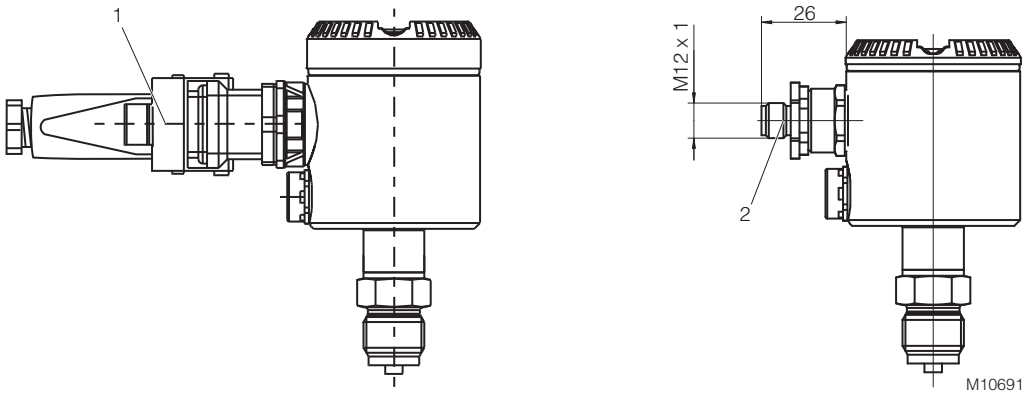

Fig. 8: Connection via plug connection
1 Harting Han 8D (8U) plug connection | 2 M12 x 1 miniature plug connector

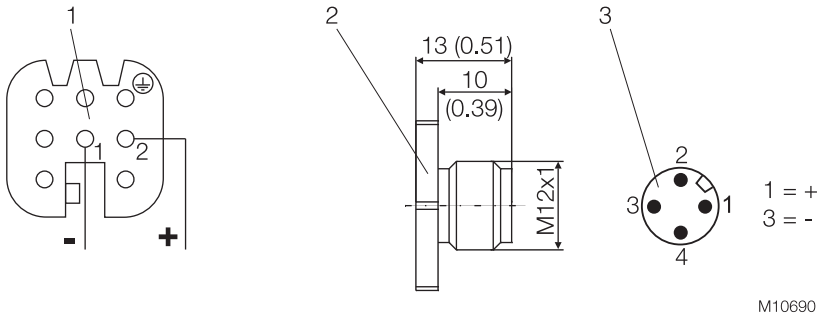

Fig. 9: Pin assignment
1 Harting Han 8D (8U) socket insert for mating plug supplied (view of sockets) |
2 Mating plug (socket); not supplied | 3 M12 x 1 miniature plug (pins)

5.3.1 Assembly and connection of Han 8D (8U) socket connector

The socket connector for connecting the cable is supplied unassembled as an accessory for the transmitter.

IMPORTANT (NOTICE)
Please observe the specifications for the electrical connection that have been supplied with the connector.

Assembly is depicted in the figure below.

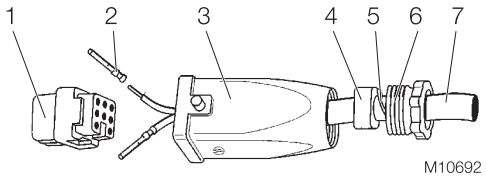

Fig. 10: Assembling the socket connector
1 Socket | 2 Contact | 3 Socket shell | 4 Gasket (can be cut) | 5 Thrust collar | 6 PG 11 pressure screw | 7 Cable (diameter 5 ... 11 mm (0.20 ... 0.43 inch))

1. The contacts are crimped or soldered onto the cable ends (wire cross-section of 0.75 … 1 mm^2 (AWG 18 … AWG 17)), from which approx. 1.5 … 2 cm (0.59 … 0.79 inch) of the sleeve and approx. 8 mm (0.32 inch) of the insulation have been stripped; they are then inserted into the socket from the rear.
2. Slide the pressure screw, thrust collar, gasket, and socket shell onto the cable in the order indicated before assembly (you may have to adjust the gasket to fit the cable diameter).

5.4 Protective conductor/Grounding (optional)

A terminal is available on the outside of the housing for grounding (PE) the transmitter.

5.5 Communication setup

The transmitter can be operated via a modem, using a PC or laptop. The modem can be connected to the transmitter in parallel at any point in the signal circuit. Communication between transmitter and modem occurs via AC signals that are superimposed on the analog 4 ... 20 mA output signal. This modulation occurs without averaging and does not, therefore, affect the measuring signal.
Communication between transmitter and PC or laptop is only possible if the signal circuit is set up as shown in the following figure, “Communication mode: Point-to-point”. The resistance between the connecting point for the FSK modem and the power supply must be at least 250 Ω (including internal resistance of the power supply unit). If this value is not achieved within the context of normal installation, an additional resistor must be used.
The ABB Contrans I supply modules with HART communication already have a factory-installed, additional resistor. Some of these modules offer the option of communicating directly over the supply module in the operating mode "FSK bus".
Power can be supplied by power supply units, batteries, or power supplies; these must be designed to ensure that the operating voltage UB of the transmitter always remains between DC 11 V and 42 V (30 V for "Ex i").
In addition, the maximum current of 20 … 23.6 mA resulting from overranging must be considered, depending on the corresponding parameterization. This yields the minimum value for US.
If additional signal receivers (e.g., indicators) are looped into the signal circuit, their resistance must also be considered.

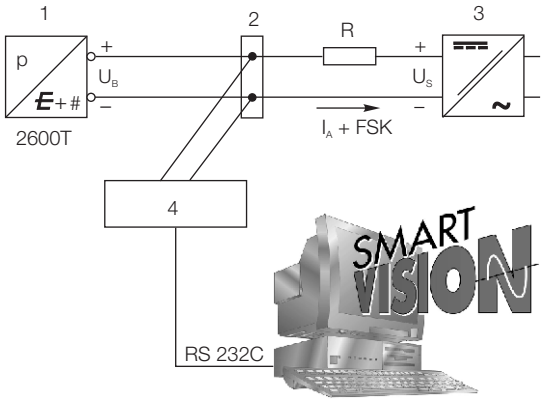

M10693

Fig. 11: "Point-to-point" communication mode
1 Pressure transmitter | 2 Possible connecting points for a modem between A and B | 3 Power supply unit | 4 FSK modem

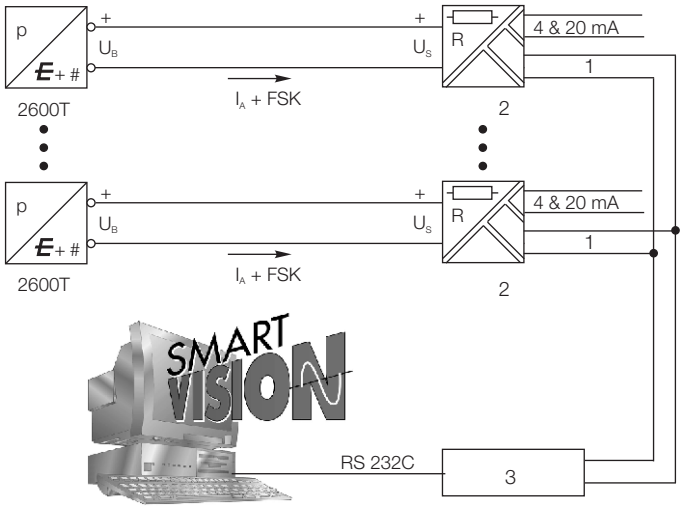

M10694

Fig. 12: "FSK bus" communication mode
1 FSK bus | 2 Supply module with HART isolation | 3 FSK modem

5.6 Connecting cable

Communication between the transmitter and PC or laptop is only possible if the cabling meets the following requirements:
The minimum wire diameter depends on the line length.
Line lengths up to 1,500 m: 0.51 mm
Line lengths above 1,500 m: 0.81 mm

The maximum line length is limited.
Dual-core cable: 3,000 m
Multi-core cable: 1,500 m

The actual possible line length of the electrical circuit depends on the total capacitance and total line resistance, and can be estimated using the following formula:

$$L = \frac{65 \times 10^6}{RxC} - \frac{C_f + 1000}{C}$$

L = Line length in m
R = Total line resistance in Ω (ohms)
C = Line capacitance in pF/m
C_f = Capacitance of the devices located in the circuit in pF
Avoid routing cables with other electrical cables (with inductive load, etc.) or near large electrical equipment.

6 Commissioning

6.1 General remarks

Once the pressure transmitter has been installed, it is put into operation by switching on the operating voltage.
Check the following before switching on the operating voltage:

- Process connections
- Electrical connection
- Fill the impulse line and measuring chamber of the measuring cell completely with measuring medium.

The transmitter can then be put into operation.
To do this, the shut-off valves must be actuated in the following order (in the default setting, all valves are closed):

1. Open the discharge shut-off valve, if present.
2. Open the shut-off valve.

To put the transmitter out of operation, carry out the steps in reverse order.

IMPORTANT (NOTICE)
In the case of pressure transmitters for absolute pressure and measuring ranges of
≤ 40 kPa absolute, please note that the pressure measuring cell has been overloaded over a long period by the atmospheric pressure during transport and storage. For this reason, you will need to allow a starting time of approx. 3 hours after commissioning until the sensor has stabilized to such an extent that the specified accuracy can be maintained.

When using transmitters with ‘intrinsic safety’ type of protection, if an ampere meter is connected to the output circuit or a modem is connected in parallel while an explosion hazard is present, the sums of the capacitances and inductances of all circuits, including the transmitter (see EC type examination certificate) must be equal to or less than the permissible capacitances and inductances of the intrinsically safe signal circuit (see EC type examination certificate for the power supply unit).
Only passive or explosion-proof test devices or display instruments may be connected.

If the output signal stabilizes only slowly, it is likely that a large damping time constant has been set on the transmitter.

6.2 Output signal

If the applied pressure is within the values indicated on the name plate, the output current ranges between 4 und 20 mA. If the pressure applied falls outside the set range, the output current will be between 3.5 mA and 4 mA if the range is undershot or between 20 mA and 23.6 mA if the range is overshot (depending on the respective configuration).

Standard setting for normal operation
3.8 mA / 20.5 mA

A current that is < 4 mA or > 20 mA may also indicate that the microprocessor has detected an internal error.

Standard setting for error detection
21 mA

The graphical user interface (DTM) can be used to diagnose the error.

IMPORTANT (NOTICE)
A brief interruption in the power supply results in initialization of the electronics (program restarts).

6.3 Write protection

Write protection prevents the configuration data from being overwritten by unauthorized users. If write protection is enabled, the "Lower Range Value / Upper Range Value” pushbutton will be disabled.
It is still possible to read out the configuration data via optional LCD indicator, handheld terminal or the graphical user interface (DTM).
Write protection can be disabled via the graphical user interface (DTM), a HART handheld terminal, or an optional LCD indicator (see “Write protection” under “Configuration”).

6.4 Adjusting lower range value / oblique sensor

During installation of the transmitter, zero position shifts may occur due to the mounting position; these must be corrected. Possible causes include:

— Transmitter mounting position is different from recommended vertical mounting position
— Fluids in differential pressure lines or remote seal capillary tubes can generate additional hydrostatic pressure

IMPORTANT (NOTICE)
The transmitter must have reached its operating temperature (approx. 5 min. after startup, if the transmitter has already reached the ambient temperature) in order to perform the zero shift correction.

There are two options (variant A or B) for correcting the 4 … 20 mA output signal directly on the transmitter.

Fig. 13:
1 Pushbutton (in hole)

Variant A, with pushbutton in device.

1. Make sure that the measured variable corresponds to the start value for the measurement process, i.e., that the pressure that the process exerts on the transmitter is the level of pressure required to generate a 4 mA output signal. The pressure must be stable (observe set damping level).
2. Unscrew the housing cover and press the pushbutton in the bore hole on the electronic unit (see the following figure) using a pin with diameter of ≤ 2.5 mm. Hold the pushbutton down for a maximum of 1 s. The output signal is set to 4 mA. The span remains unchanged.
3. Screw the housing cover back on.

IMPORTANT (NOTICE)
The lower range value is stored to a failsafe memory approx. 25 s after you activate the pushbutton.

Correction procedure "A" described above does not affect the physical pressure shown; it only corrects the analog output signal. For this reason, the analog output signal may differ from the physical pressure shown on the digital display or the communication tool.
To avoid this discrepancy, you need to correct the zero position shift (zero shift) as described under variant "B".

IMPORTANT (NOTICE)
The procedure described in "A" above does not affect the physical pressure shown; it only corrects the analog output signal. For this reason, the analog output signal may differ from the physical pressure shown on the digital display or the communication tool.
To avoid this discrepancy, you need to correct the zero position shift (zero shift) as described under variant "B".

Variant B, with pushbuttons on the optional LCD indicator.

1. Make sure that the process pressure corresponds to the atmospheric pressure Pe = 0 (with 261Gx) or a complete vacuum Pabs = 0 abs (with 261Ax). The pressure must be stable (observe set damping level).
2. Unscrew the housing cover and select the "Calibrate_Zero Trim" menu item on the LCD indicator.
3. The correction is made by pressing the button (for details of menu control, see "Configuration with the LCD indicator").
4. Where the transmitter mounting position differs from the nominal position, we recommend that you also compensate for the temperature-dependent effect of this mounting position. To do this, select the "Device Setup_Installation angle" menu item (software version 1.5.0 or higher). This shows the angle at which the transmitter has been installed.
5. Screw the housing cover back on.

6.5 Installing/Removing the LCD indicator

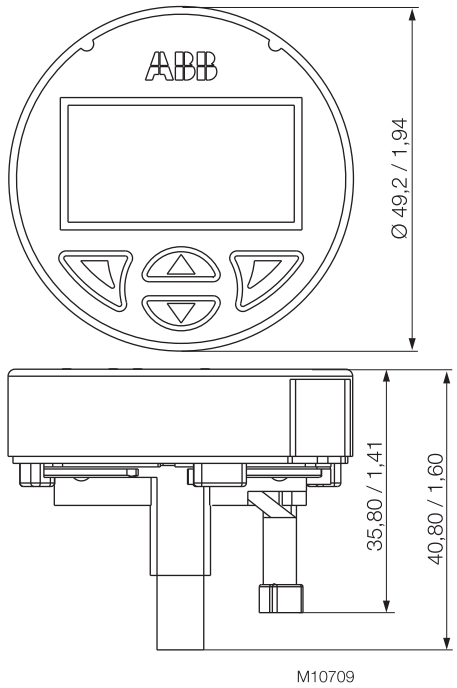

Fig. 14:

The LCD indicator is attached to the housing of the pressure transmitter. The LCD indicator can be replaced, e.g., if defective.

WARNING – Risk of burns!
The connection head can be become very hot as a result of the process. There is a danger of burns.
Switch off the LCD indicator before replacing the LCD indicator.
The transmitter atmosphere may be explosive. Risk of explosion!

1 Unscrew the housing cover for the transmitter.
2. Carefully remove the LCD indicator from the inset for the transmitter. The LCD indicator is held firmly in place, meaning that you may have to use the tip of a screwdriver to pry it loose. Take care to avoid any mechanical damage.
3. No tools are required to insert the LCD indicator. Carefully insert both guide pins for the LCD indicator in the guide holes of the transmitter inset. Make sure the black connection socket fits into the terminal on the transmitter inset. The red outer flat ribbon cable marking is on the inside facing the middle of the device. Then press it in as far as it will go. Make sure that the guide pins and connection socket are fully inserted.

IMPORTANT (NOTICE)
The LCD indicator is designed with type of protection "intrinsic safety" and is covered by the transmitter's EC type-examination certificate.

Following this, the position of the LCD indicator can be adjusted to suit the installation position of the transmitter, to ensure that the display is legible.
The LCD indicator has twelve positions that can be set in 30° increments.

NOTICE – Potential damage to parts!
Make sure the flat ribbon cable does not get twisted or torn when rotating the LCD indicator.

4. The LCD indicator consists of an upper and a lower part. Both parts are connected to each other via a bayonet lock. Carefully rotate the top part of the LCD indicator approx. 45° to the left, in order to detach it from the bottom part of the indicator.
5. Carefully lift the LCD indicator into the desired position in the bottom part and rotate to the right until it snaps into place.

NOTICE – Potential damage to parts!
Take care not to pinch the flat ribbon cable when rotating the LCD indicator.

6 Screw on the housing cover for the transmitter.

6.6 Pressure sensor ventilation

Fig. 15: Ventilation unit

For technical reasons, you must apply atmospheric pressure to the reference side of the pressure sensor.
A special ventilation unit (1) is screwed into the electronic housing from the outside and is equipped with a PTFE filter on the inside. Make sure that the ventilation opening is not covered (e.g., do not paint over).

7 Configuration, parameterization

NOTICE – Potential damage to device as a result of electrostatic charging!
When the housing is open, EMC protection is impaired and there is no longer any protection against accidental contact.
Do not touch conductive parts of the device.

7.1.1 Standard configuration

Transmitters are set to the customer's specified span at the factory. The set range and measuring point number are provided on the name plate. If this data has not been specified, the transmitter will be delivered with the following configuration:

Parameter	Factory setting
4 mA	Zero
20 mA	Upper measuring range limit (URL)
Output	Linear
Damping	0.1 s
Transmitter failure mode	21 mA
Opitional LCD display	0 … 100 %

Any or all of the configurable parameters listed above, including initial value and final value, can easily be changed using the optional LCD indicator, a portable HART handheld terminal communicator, or the SMART VISION or ASSET VISION BASIC configuration software with DTM for 2600T which can be run on a PC.

7.2 Configuration types

Pressure transmitters can be configured as follows:
- Configuration using pushbutton on pressure transmitter.
- Configuration with the LCD indicator.
- Configuration with the PC / laptop or handheld terminal.
- Configuration via graphical user interface (DTM).

7.3 Configuration using pushbutton on pressure transmitter

7.3.1 General remarks

The pushbutton is located on the electronics unit (without mounted LCD indicator).
The pushbutton is used to set the "Lower Range Value" (0 %) and "Upper Range Value" (100 %) parameters.
To access the pushbutton, you must remove the housing cover for the electronics unit.
The pushbutton (1) is located in the bore hole and can be pressed with a pin or screwdriver with a diameter of ≤ 2.5 mm.

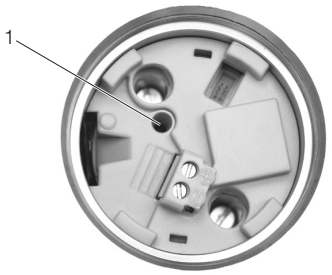

Fig. 16: Pushbutton position

7.3.2 Configuration

The "Lower Range Value" and "Upper Range Value" parameters can be set directly on the transmitter using a button. The transmitter has been set by the manufacturer based on the order information.
The name plate contains information on the "Lower Range Value" and "Upper Range Value" that have been set.

In general, the following applies:
For a setting, e.g., of 0 … 40 kPa, the first pressure value (0 kPa) is always assigned to the 4 mA signal and the second pressure value (40 kPa) is always assigned to the 20 mA signal.
To reset the transmitter, apply the pressure for the "Lower Range Value" and "Upper Range Value" to the measuring equipment. Make sure that the measuring limits are not exceeded.
Reducing stations can be used as transducers with adjustable pressure and reference displays.

IMPORTANT (NOTICE)
When making the connection, please ensure that there are no residual fluids (for gaseous measured media) or air bubbles (for fluid measured media) in the connection lines, since these can lead to errors during inspection.

Any potential measuring error for the pressure generator should be at least three times smaller than the desired measuring error for the transmitter.
It is recommended that, if time constant is known, you set the damping to zero (via LCD indicator or graphical user interface).

IMPORTANT (NOTICE)
In the case of 261A pressure transmitters for absolute pressure that feature measuring ranges of ≤ 40 kPa absolute, please be aware that the pressure measuring cell will have been overloaded by the atmospheric pressure due to the long periods of transport and storage involved. For this reason, you will need to allow a starting time of approx. 3 hours after commissioning, until the sensor has stabilized to such an extent that the specified accuracy can be maintained.

Adjusting the "Lower Range Value" and "Upper Range Value" parameters

1. Apply the pressure for the "Lower Range Value" and wait approx. 30 s until it has stabilized.
2. Setting for "Lower Range Value": Press the pushbutton for 1 s. The output current is set to 4 mA.
3. Apply the pressure for the "Upper Range Value" and wait approx. 30 s until it has stabilized.
4. Setting for “Upper Range Value”: Press and hold the pushbutton for approx. 5 s. The output current is set to 20 mA.
5. If required, reset the damping to its original value.
6. Record the new settings. Approx. 25 s after the pushbutton for the 0 % or 100 % setting is pressed, the respective parameter is stored in the non-volatile memory.

IMPORTANT (NOTICE)
This configuration procedure only changes the 4 … 20 mA current signal. The physical process pressure shown on the digital display or user interface is not affected. To avoid potential discrepancies, you can make corrections by following the menu path "Calibrate_Pressure Measurement_Balance Points" in the user interface.
After performing a correction, you must check the settings for the device.

7.4 Configuration with the LCD indicator

IMPORTANT (NOTICE)
To access the control buttons for the LCD indicator, you must unscrew the housing cover with the inspection glass.

7.4.1 Menu navigation

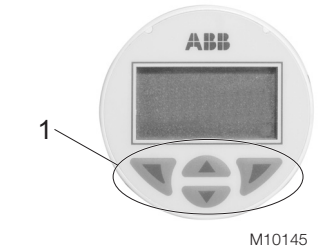

Fig. 17: LCD display

1 Operating buttons for menu navigation | 2 Menu name display | 3 Menu number display | 4 Marker for indicating the relative position within the menu | 5 Display showing the current functions of the and operating buttons

You can use the or operating buttons to browse through the menu or select a number or character within a parameter value.
Different functions can be assigned to the and operating buttons. The function that is currently assigned to them (5) is shown on the LCD display.

Control button functions

	Meaning
Exit	Exit menu
Back	Go back one submenu
Abort	Cancel a parameter entry
Next	Select the next position for entering numerical and alphanumeric values

	Meaning
Select	Select submenu / parameter
Edit	Edit parameter
OK	Save parameter entered

7.4.2 Process display

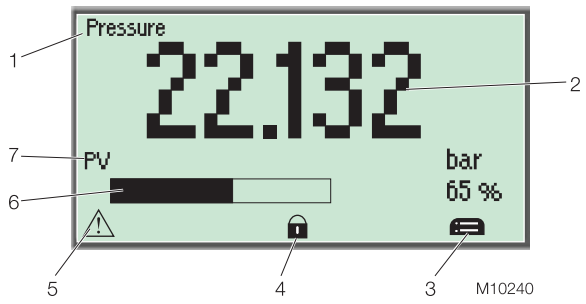

Fig. 18: Process display (example)

1 Line 1: Measuring point identifier |
2 Line 2: Current process values |
3 Symbol indicating button function |
4 "Write protection" symbol | 5 Diagnostic message |
6 Bargraph + numerical % value |
7 Line 3: Displays the variable / unit shown in line 2

The process display appears on the LCD display when the device is switched on. It shows information about the device and current process values.
The way in which the current process values (2) are shown can be adjusted on the configuration level.
The decimal point is positioned automatically so that the maximum value can be displayed as a six-figure value. If the value is exceeded, “Overflow” is shown as six upward or downward pointing arrows. A decimal point counts as a place and is no longer displayed after the sixth place.

Symbol description

Symbol	Description
	Call up configuration level.
	Write protection is enabled. The device is protected against changes to the parameter settings.

Example of positioning the decimal point:

Setting 0 … 1000.0 – in this case, even smaller values are only displayed with one decimal place.

Decimal places for variables

The following variables are displayed with a fixed decimal place:

Variable	Decimal places
Temperature (sensor temperature)	1
Output (%)	1
Current (output current)	2

Error messages on the LCD display

In the event of an error, a flashing message consisting of an icon and text (e.g., device defective) appears at the bottom of the process display. If you press the left LCD indicator button while a message is flashing, the text becomes permanent. A write protection icon will be covered by one of the above messages.

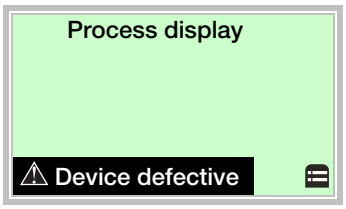

Symbol	Priority	Description
	1	Error message Device defective, refers to a serious device error (the device must be replaced).
	2 3	Warning message Refers to specific operating conditions or events (e.g., simulation active, maintenance required).
	4a 4b 4c	Process message Indicates that a parameter has fallen below or exceeded a process alarm condition.

7.4.3 Switching to the configuration level (parameterization)

The device parameters can be displayed and changed on the configuration level.

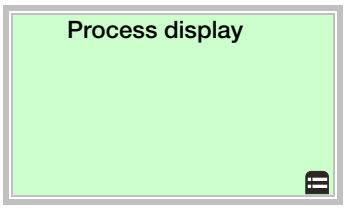

8. Use to switch to the configuration level.

7.4.4 Menu structure

The parameters are structured in the form of a menu. The menu consists of a maximum of three levels. Menu items with an asterisk (*) have additional parameters that are described in the next section.

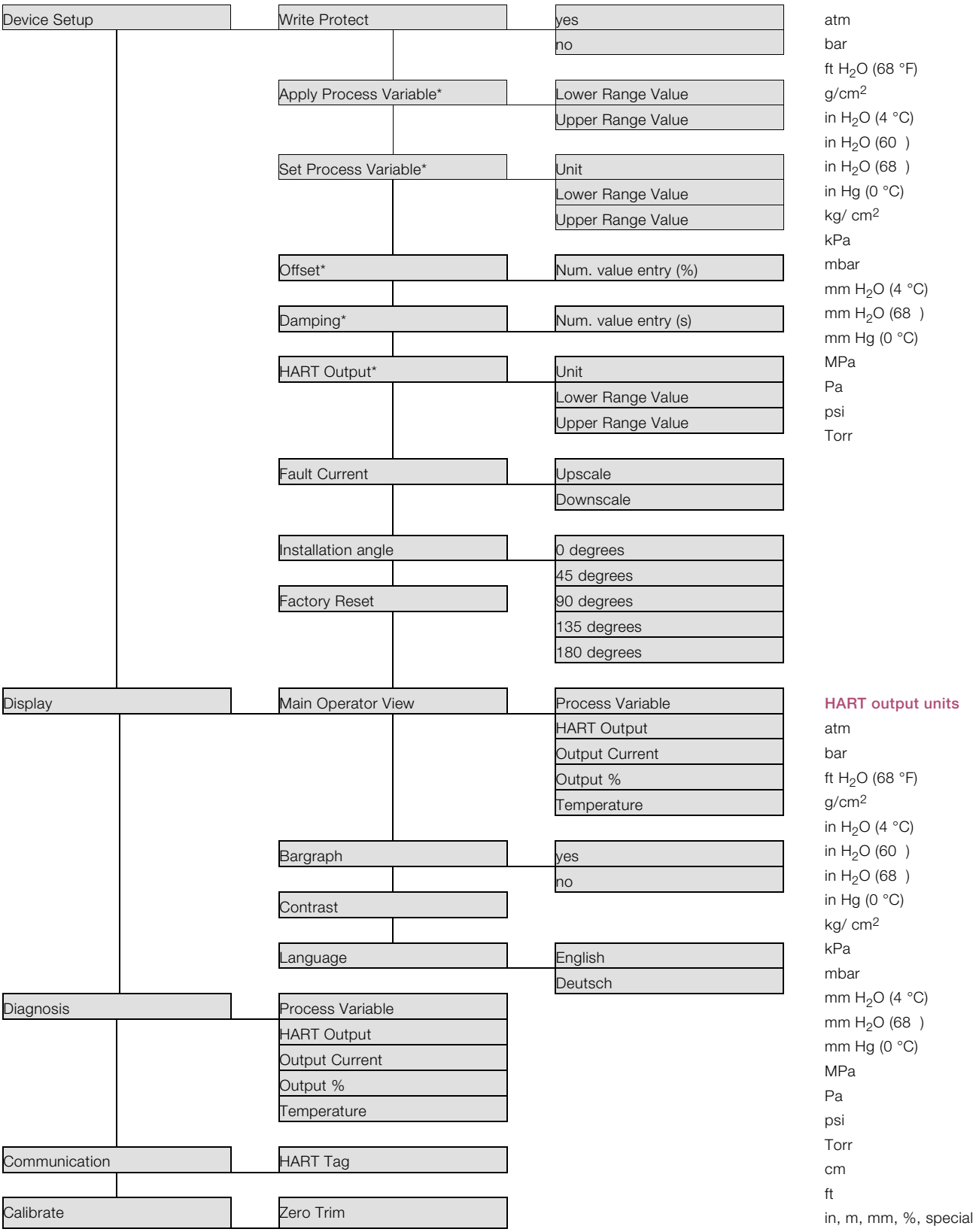

7.4.5 Parameter descriptions

Enabling / disabling (Write Protect)

Via LCD indicator, DTM or handheld terminal.

If “Write Protect” is enabled, it is not possible to configure the 261G/A pressure transmitter. All editing functions on the indicator are hidden, except for write protection. It is, however, possible to read out data. Write protection is applied for the entire device.

IMPORTANT (NOTICE)

In addition, the “Local operation” option can be disabled via the graphical user interface (DTM) or a handheld terminal (HHT).

Editing functions are also hidden when the “Local operation” option is disabled, i.e., the 261G/A pressure transmitter is no longer configurable via the LCD indicator.

The “Local operation” option can only be enabled via the graphical user interface (DTM) or a handheld terminal.

Apply Process Variable

Set "Lower Range Value" and "Upper Range Value" with applied pressure on the device via the process or a pressure generator.

1. Apply the pressure for the "Lower Range Value" and wait approx. 30 s until it has stabilized.
2. Setting for "Lower Range Value": Click the right pushbutton for "OK” – The output current is set to 4 mA.
3. Apply the pressure for the "Upper Range Value" and wait approx. 30 s until it has stabilized.
4. Setting for "Upper Range Value": Click the right pushbutton for "OK” – The output current is set to 20 mA.

Set Process Variable

Set “Lower Range Value” and “Upper Range Value” without applied pressure by entering the corresponding pressure values via keypad.

Offset

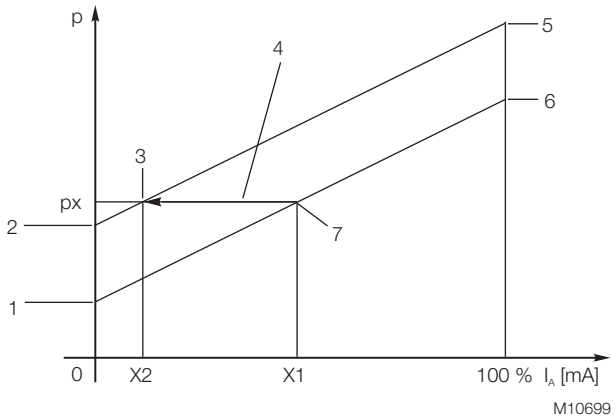

Fig. 19: Offset shift

1 Old zero | **2** New zero | **3** New balance point | **4** Offset shift | **5** New end value | **6** Old end value | **7** Old balance point

This function performs an offset shift of the characteristic so that it travels through a point specified by the user. This makes it possible to set the output signal of several measuring devices that measure the same process variable to the same value, without the need to perform calibration with applied pressure.

This function can be performed at any point on the characteristic under the following circumstances:

- Process variable is within the configured measuring range. The transmitter has a linear transmission characteristic.
- Enter the desired output current as a percentage to perform an offset shift for the measuring range.
- When a pressure px is applied, the transmitter displays the standardized output value x1 as a percentage. Based on the current application, however, the value x2 should be displayed. The value x2 in % is set via the LCD indicator. The transmitter calculates the new zero and the new end value, and adopts these new settings (see the figure “Offset shift”).

Damping
When the output signal for the transmitter is noisy as a result of the process, the signal can be smoothed (damped) electrically.
The additional time constant can be set between 0 s and 60 s in increments of 0.0001 s.
Damping does not affect the measured value shown in the digital display as a physical unit. It only affects the quantities derived from it such as the analog output current, HART output (freely assigned start value, end value and unit).

HART Output
HART output refers to freely assigned start value, end value and unit for the pressure measured. If the values are configured so that the 0 % and 100 % points correspond to 5 m and 20 m respectively, the HART output will indicate a value of 12.5 m at a pressure of 50 %.

Fault current
If a serious error is detected during the internal monitoring routines run by the transmitter, the transmitter switches the output signal to a specified minimum or maximum value as a message.
Use the menu item “Fault Current” to select the alarm response and the modulation direction of the output current in the event of a malfunction.
“Upscale” (High alarm) means that the output current is switched to the configured high alarm current.
“Downscale” (Low alarm) switches the output current to the configured low alarm current. The level of the low or high alarm current can only be changed using the graphical user interface (DTM) or handheld terminal with loaded DD (device description) of the 261 transmitter.
Setting limits:
— Min. alarm current: 3.5 … 4 mA
— Max. alarm current: 20 … 23.6 mA

Default setting from factory:
— Max. alarm current: 21 mA

Installation angle
You can specify the extent to which the transmitter deviates from the recommended nominal position (vertical, process connection pointing downward) by selecting one of the angular degree settings displayed. This compensates for the temperature-dependent effect of the mounting position.

Factory Reset
Restores the transmitter settings to the factory default.

Display – Main Operator View
The parameters listed can be displayed permanently in this view (failsafe memory).

Contrast
If the lighting conditions are unfavorable, making it difficult to read the LCD indicator, you can adjust the background by making it darker or lighter (or buttons).
The default setting is 50 %. If the menu cannot be read because the contrast has been adjusted too much or because of unfavorable conditions, e.g., change in temperature, pressing both outer buttons together for > 5 s will restore the default contrast settings.

Diagnosis

The parameters listed can be displayed temporarily in this view (not failsafe memory). The value configured under “Main operator view” remains unchanged.

IMPORTANT (NOTICE)
The LCD indicator automatically returns to the process display approximately three minutes after the last button was pressed.

HART Tag

Each transmitter requires a unique bus ID in order to communicate within a bus structure. The bus ID (tag) can be entered via the “Communication” function and is subject to a maximum length of 8 characters. Characters can include uppercase letters, numbers, spaces and a few special characters.

Editing the "HART Tag":
Access menu via “Communication” according to the menu structure (see "Menu structure").
The Edit mode can be accessed via "Select" or "Edit" (see "Alphanumeric entry").

1. Select the required characters one by one and character by character from the character selection bar in the centre using the two buttons (character block moves to the left) and (character block moves to the right).
   A character is selected when the cursor is positioned on the character and the background is dark. The selected character is added to the upper area where the Tag Name is displayed.
2. Use the left button (Next) to move to the next editing area for the tag name.
3. Once the tag name has been entered fully (max. 8 characters), confirm by pressing the right button (OK). Press the button (Next) repeatedly to move the cursor to the right. Once the cursor reaches the ninth position, "Cancel" is displayed bottom right.
4. Cancel terminates and exits the Edit mode. To return to the start, press the left button (Next).

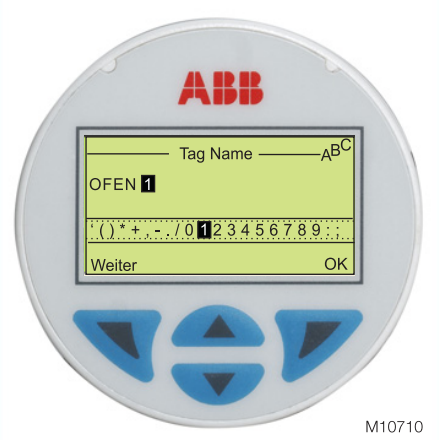

Fig. 20:

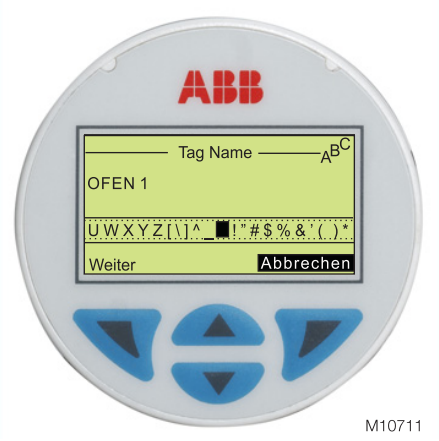

Fig. 21:

Zero Trim

This function allows a zero shift of the process pressure read in from the measuring cell.
If, for example, the transmitter displays a small pressure value at a "0 Pa" process pressure (transmitter was not installed precisely in vertical position), this pressure can be adjusted to "0 Pa".

7.5 Configuration with the graphical user interface (DTM)

7.5.1 System requirements

— Operating control program (e.g. SMART VISION version 4.01 or higher)
— DTM or Asset Vision Basic (Device Type Manager, graphic user interface)
— Operating system (depending on the respective control program)

1. The DTM is started in 3 steps, either using the right mouse button or via the ‘Device’ menu item, with 1. ‘More’ and 2. ‘Process’.
2. After a ‘Connection set-up’ (Step 3), the data from the 261Gx / Ax transmitter should be fully loaded first.

Modified data will be underlined in blue.

IMPORTANT (NOTICE)
If modified data is not displayed underlined in blue, click in another window before the data is transferred to the device. The modified value is then displayed underlined in blue.

3. This data is sent to the device by selecting ‘Save data to device’.

IMPORTANT (NOTICE)
Saving the data in the transmitter automatically saves it to the non-volatile memory.
For this purpose, the transmitter must be supplied with power for two minutes.
Failure to observe this will cause the transmitter to revert to the previous data the next time it is used.

The communication name updates automatically when the data is loaded from the device.
The most important configuration / parameterization options in the user interface are briefly listed below. For further information on the menu commands, refer to the context-sensitive help.

IMPORTANT (NOTICE)
Before beginning with device setup, make sure that write protection is disabled in the DTM as well as in the LCD indicator.

Menu Path
‘Configure_Basic_Parameters_General’

7.6 Parameter descriptions

Write protection
Enabling/Disabling is performed via the DTM, handheld terminal or LCD indicator.
When “Write Protect” is enabled for the device, HART write protection is set, i.e., it is not possible to configure the device locally or via external tools such as a handheld terminal (HHT). It is, however, possible to read out data.
Write protection can be cancelled by selecting “User data write enabled”.

Local operation
Enabling/Disabling is performed via DTM or HHT.
Setup with indicator "Disabled" means that the transmitter cannot be configured using the pushbutton for the lower and upper range values or, if there is an LCD indicator present (optional), that it cannot be configured via the display menu.
Once “Local operation” is disabled, it cannot be enabled again on the LCD indicator.

Correcting the zero shift
Menu path
“Configure_Configure Pressure Measurement_Pressure”

Press the “Adjust” button in the “Zero Shift” field.
Calibration is performed immediately and saved to the failsafe memory.

Setting the “Lower Range Value” and “Upper Range Value”
Menu path:
“Configure_Configure Pressure Measurement_Pressure”

The “Scaling” field offers two setting options.

1. Enter value:
Enter the desired values in the input fields "Lower Range Value" and "Upper Range Value".

2. “Apply Process Variable”:
For settings, apply the pressure for the “Lower Range Value” and “Upper Range Value” to the measuring cell.
After the desired stabilized pressure is reached, press either "Set lower Range value" or "Set Upper Range Value". Make sure that the measuring limits are not exceeded.
Reducing stations with adjustable pressure and reference displays can be used as pressure generators. When making the connection, please ensure that there are no residual fluids (for gaseous testing materials) or air bubbles (for fluid testing materials) in the connection lines, since these can lead to errors during inspection.
The possible measuring error of the pressure generator should be at least three times smaller than the desired measuring error of the transmitter.

Adjust damping
Menu path:
“Configure_Configure Pressure Measurement_Pressure”

Enter the desired damping value in the field “Output parameter” in the line “Damping”.
The additional time constant can be set between 0 s and 60 s in increments of 0.0001 s.

Offset
Menu path:
“Configure_Configure Pressure Measurement_Pressure”

This function performs a parallel shift of the characteristic curve so that it travels through a point specified by the user. This makes it possible to set the output signal of several measuring devices that measure the same process variable to the same value without having to perform a calibration with applied pressure.
For further information, see “Offset shift”. Enter the respective new X2 value (in %) in the window “The current measurement value corresponds to”.

Description
Menu path:
"Device_Identification_Device"

A measuring point tag with a maximum length of 16 characters can be entered here. Characters can include uppercase letters, numbers and a few special characters.

Factory reset
Menu path:
“Device_Reset_Reset to factory default”

Restores the transmitter settings to the factory default.

Warm start
Menu path:
“Device_Reset_Warm Start”

The transmitter is restarted with its basic settings. Temporary settings such as “Simulating the current output” or “Diagnostic messages” are reset.

IMPORTANT (NOTICE)
This action will briefly interrupt the connection.

7.7 Configuration with the PC / laptop or handheld terminal

A graphical user interface (DTM) is required for configuration of the transmitter via PC or laptop. For operating instructions, please refer to the software description.

Further information:
Data sheet on DTM / SMART VISION or ASSET VISION BASIC

Communications protocol:
HART®
Hardware:
FSK modem for PC / notebook
HART handheld terminal (HHT):
e. g. 691 HT, HHT275/375, DHH800-MFC, DHH805

You can use a handheld terminal to read out or configure / calibrate the transmitter. If a communication resistor is already installed in the connected power supply unit, you can connect the handheld terminal directly at any point along the 4 to 20 mA line.
If no communication resistor (min. 250 Ω) is present, you will absolutely need to install one in the line. The handheld terminal is connected between the resistor and transmitter, not between the resistor and power supply unit.

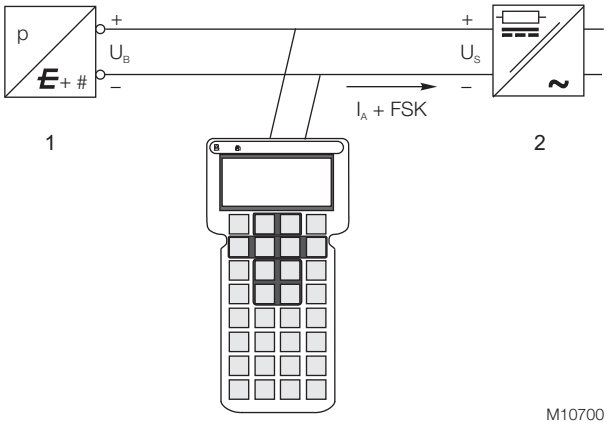

Fig. 22: Communication resistor in power supply unit
1 Transmitter | 2 Power supply unit

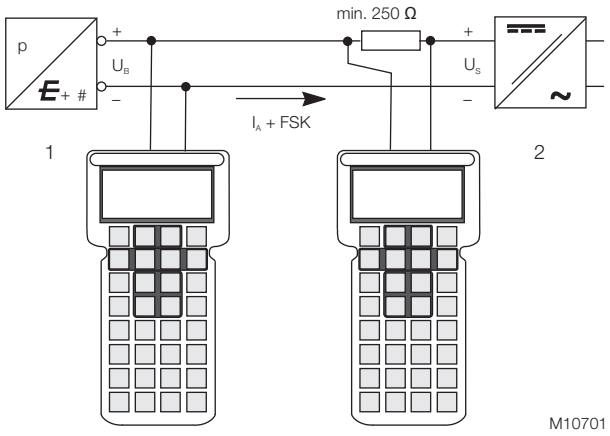

Fig. 23: Communication resistor in the connection lead)
1 Transmitter | 2 Power supply unit

If a handheld terminal or a PC is being used for communication / configuration / parameterization in a potentially explosive atmosphere with type of protection "intrinsic safety", the devices used must be certified accordingly.
This applies even if the device is only connected for a short period of time. This proof of "intrinsic safety" must be supplied in addition to the transmitter.

For additional information, refer to the operating instructions included with the handheld terminal.
If the transmitter has been configured in the factory according to customer specifications for the measuring point, all you have to do is mount the transmitter as prescribed (to correct potential zero shifts, refer to the section "Correcting the zero shift"), and switch it on. The measuring point will now be ready for use.
If the transmitter is equipped with an LCD indicator, the current pressure/absolute pressure is displayed in % (factory setting, unless otherwise specified).
If, however, you wish to make changes to the configuration, a handheld terminal or - preferably - a graphical user interface (DTM) is required.
This DTM tool can be used to configure the device fully. It supports the HART protocol and runs on a PC or laptop, i.e., on an automated system.
Refer to the installation manual provided with the software for the steps required to install the operating tool. The most important parameters can be set under the path “Configure_Pressure Measurement”.
The program offers the option of configuring, polling, and testing the transmitter. In addition, offline configuration can be performed by means of an internal database. Each configuration step is subject to a plausibility check. You can call up context-sensitive help at any time by pressing the "F1" key.
We recommend that you save the existing configuration data on a separate data storage medium as soon as you receive the transmitter or before you change the configuration. To do this, select:
"File_Save".

7.8 Configuration with the graphical user interface (DTM)

7.8.1 System requirements

— Operating control program (e.g. SMART VISION version 4.01 or higher)
— DTM or Asset Vision Basic (Device Type Manager, graphic user interface)
— Operating system (depending on the respective control program)

1. The DTM is started in 3 steps, either using the right mouse button or via the ‘Device’ menu item, with 1. ‘More’ and 2. ‘Process’.
2. After a ‘Connection set-up’ (Step 3), the data from the 261Gx / Ax transmitter should be fully loaded first.

Modified data will be underlined in blue.

IMPORTANT (NOTICE)
If modified data is not displayed underlined in blue, click in another window before the data is transferred to the device. The modified value is then displayed underlined in blue.

3. This data is sent to the device by selecting ‘Save data to device’.

IMPORTANT (NOTICE)
Saving the data in the transmitter automatically saves it to the non-volatile memory.
For this purpose, the transmitter must be supplied with power for two minutes.
Failure to observe this will cause the transmitter to revert to the previous data the next time it is used.

The communication name updates automatically when the data is loaded from the device.
The most important configuration / parameterization options in the user interface are briefly listed below. For further information on the menu commands, refer to the context-sensitive help.

IMPORTANT (NOTICE)
Before beginning with device setup, make sure that write protection is disabled in the DTM as well as in the LCD indicator.

Menu Path
‘Configure_Basic_Parameters_General’

7.9 Parameter descriptions

Write protection
Enabling/Disabling is performed via the DTM, handheld terminal or LCD indicator.
When “Write Protect” is enabled for the device, HART write protection is set, i.e., it is not possible to configure the device locally or via external tools such as a handheld terminal (HHT). It is, however, possible to read out data.
Write protection can be cancelled by selecting “User data write enabled”.

Local operation
Enabling/Disabling is performed via DTM or HHT.
Setup with indicator "Disabled" means that the transmitter cannot be configured using the pushbutton for the lower and upper range values or, if there is an LCD indicator present (optional), that it cannot be configured via the display menu.
Once “Local operation” is disabled, it cannot be enabled again on the LCD indicator.

Correcting the zero shift
Menu path
“Configure_Configure Pressure Measurement_Pressure”

Press the “Adjust” button in the “Zero Shift” field.
Calibration is performed immediately and saved to the failsafe memory.

Setting the “Lower Range Value” and “Upper Range Value”
Menu path:
“Configure_Configure Pressure Measurement_Pressure”

The “Scaling” field offers two setting options.

1. Enter value:
Enter the desired values in the input fields "Lower Range Value" and "Upper Range Value".

2. “Apply Process Variable”:
For settings, apply the pressure for the “Lower Range Value” and “Upper Range Value” to the measuring cell.
After the desired stabilized pressure is reached, press either "Set lower Range value" or "Set Upper Range Value". Make sure that the measuring limits are not exceeded.
Reducing stations with adjustable pressure and reference displays can be used as pressure generators. When making the connection, please ensure that there are no residual fluids (for gaseous testing materials) or air bubbles (for fluid testing materials) in the connection lines, since these can lead to errors during inspection.
The possible measuring error of the pressure generator should be at least three times smaller than the desired measuring error of the transmitter.

Adjust damping
Menu path:
“Configure_Configure Pressure Measurement_Pressure”

Enter the desired damping value in the field “Output parameter” in the line “Damping”.
The additional time constant can be set between 0 s and 60 s in increments of 0.0001 s.

Offset
Menu path:
“Configure_Configure Pressure Measurement_Pressure”

This function performs a parallel shift of the characteristic curve so that it travels through a point specified by the user. This makes it possible to set the output signal of several measuring devices that measure the same process variable to the same value without having to perform a calibration with applied pressure.
For further information, see “Offset shift”. Enter the respective new X2 value (in %) in the window “The current measurement value corresponds to”.

Description
Menu path:
"Device_Identification_Device"

A measuring point tag with a maximum length of 16 characters can be entered here. Characters can include uppercase letters, numbers and a few special characters.

Factory reset
Menu path:
“Device_Reset_Reset to factory default”

Restores the transmitter settings to the factory default.

Warm start
Menu path:
“Device_Reset_Warm Start”

The transmitter is restarted with its basic settings. Temporary settings such as “Simulating the current output” or “Diagnostic messages” are reset.

IMPORTANT (NOTICE)
This action will briefly interrupt the connection.

8 Ex relevant specifications

8.1 Hazardous atmospheres

8.1.1 ATEX transmitter with 'intrinsic safety Ex ia/ib' type of protection in accordance with Directive 2014/34/EU

Transmitter with 4 ... 20 mA output signal and HART communication	
Certificate no.	PTB 05 ATEX 2032
Marking	II 1/2 G Ex ia IIC T4 bzw. T6 Ga/Gb II 2 G Ex ib IIC T4 bzw. T6 Gb

Permissible ambient temperature range according to temperature class:	
Ambient temperature	**Temperature class**
-40 … 85 °C (-40 … 185 °F)	T1 … T4
-40 … 71 °C (-40 … 159 °F)	T5
-40 … 56 °C (-40 … 132 °F)	T6

or

Marking	II 1/2 D Ex ia IIIC T66°C bzw. T95°C Da/Db II 2 D Ex ib IIIC T66°C bzw. T95°C Db

Permissible ambient temperature range:
-40 … 85 °C (-40 … 185 °F)

Supply and signal circuit with 'Intrinsically safe Ex ia/ib IIB/IIC type of protection', with the following maximum values	
	U_i = 30 V
	I_i = 130 mA
	P_i = 0.8 W
Effective internal capacitance	C_i = 10 nF
Effective internal inductance	L_i = 0.5 mH

8.1.2 IECEx transmitter with the following types of protection: 'Intrinsic Safety ia', 'non sparking nA' and 'dust ignition protection by enclosure tb'

Transmitter with 4 ... 20 mA output signal and HART communication	
Certificate no.	IECEx ZLM 10.0002
Marking	Ex ia IIC T6 bzw. T4 Ga/Gb Ex ia IIIC T66°C bzw. T95°C Da/Db Ex nA IIC T6 bzw. T4 Gc Ex tb IIIC T66°C bzw. T95°C Db

Maximum permissible ambient temperature range according to temperature class		
Ambient temperature	**Temperature class**	**Surface temperature**
-40 … 85 °C (-40 … 185 °F)	T4	95 °C (203 °F)
-40 … 56 °C (-40 … 133 °F)	T6	66 °C (151 °F)

Electrical data according to designation Ex ia IIC T6 or T4 Ga/Gb and Ex ia IIIC T66°C or T95°C IP6X Da/Db

Power supply and signal circuit with 'intrinsic safety' Ex ia or Ex ib type of protection, for connection to power supply units with the following maximum values (terminal signal ±)	
	U_i = 30 V
	I_i = 130 mA
	P_i = 0.8 W
Effective internal capacitance	C_i = 10 nF
Effective internal inductance	L_i = 0.5 mH

If the transmitter is being integrated into a partition between equipment protection level Ga or Da and a lower protection level, the transmitter must be supplied with power by an Ex ia intrinsically safe circuit.

Electrical data according to designation Ex nA IIC T6 or T4 Gc and Ex tb IIIC T66°C or T95°C IP6X Db

	$I_N \leq 22{,}5$ mA
	$U_N \leq 45$ V

8.1.3 Factory Mutual (FM)

Transmitter with 4 ... 20 mA output signal and HART communication	
Intrinsic Safety	Class I; II and III; Division 1; Groups A, B, C, D; E, F, G Class I; Zone 0; AEx ia Group IIC T6; T4
Non-incendive	Class I, II, III, Division 2; Groups A, B, C, D, F, G
Degree of protection	NEMA type 4X (indoor and outdoor installation)

8.1.4 Canadian Standards Association (CSA)

Transmitter with 4 ... 20 mA output signal and HART communication	
Intrinsic Safety	Class I; II and III; Division 1; Groups A, B, C, D; E, F, G Class I; Zone 0; Group IIC T6; T4
Non-incendive	Class I, II, III; Division 2; Groups A, B, C, D; F, G
Degree of protection	NEMA type 4X (indoor and outdoor installation)

Permissible ambient temperature range according to temperature class:			
	U_i max. = 30 V; I_i max = 130 mA; P_i = 0,8 W; C_i = 10 nF; L_i = 0,5 µH		
Ex ia II CT1 ... T6	T6	T5	T1 ... T4
	-40 ... 56 °C	-40 ... 71 °C	-40 ... 85 °C

Intrinsic Safety	Gas and dust, order code X4
Degree of protection	Ex ia II CT1~T6; DIP A20 T_A 95 °C

9 Specification

9.1 Functional specifications

9.1.1 Measuring range limits and span limits

Sensor code	Measuring range upper limit (URL)	Measuring range lower limit (LRL) Model 261GS	Minimum measuring span	
			Model 261GS Gauge pressure	Model 261AS Absolute pressure
C	6 kPa 60 mbar 24 inH_2O	-6 kPa -60 mbar 24 inH_2O	0,3 kPa 3 mbar 1,2 inH_2O	0,3 kPa 3 mbar 2,25 mm Hg
F	40 kPa 400 mbar 160 inH_2O	-40 kPa -400 mbar -160 inH_2O	2 kPa 20 mbar 8 inH_2O	2 kPa 20 mbar 15 mm Hg
L	250 kPa 2500 mbar 1000 inH_2O	0 abs	12,5 kPa 125 mbar 50 inH_2O	12,5 kPa 125 mbar 93,8 mm Hg
D	1000 kPa 10 bar 145 psi	0 abs	50 kPa 500 mbar 7,25 psi	50 kPa 500 mbar 375 mm Hg
U	3000 kPa 30 bar 435 psi	0 abs	150 kPa 1,5 bar 21,7 psi	150 kPa 1,5 bar 21,7 psi
R	10000 kPa 100 bar 1450 psi	0 abs	500 kPa 5 bar 72,5 psi	500 kPa 5 bar 72,5 psi
V	60000 kPa 600 bar 8700 psi	0 abs	3000 kPa 30 bar 435 psi	-

IMPORTANT (NOTICE)

The measuring range lower limit (LRL) for model 261AS is absolute 0 for all measuring ranges.

9.1.2 Span limits

Maximum span = measuring range upper limit (URL)

To optimize performance characteristics, it is recommended that you select the transmitter sensor code with the lowest turn down ratio.

TURNDOWN = Upper range limit / set span

9.1.3 Zero suppression and elevation

The zero position and span can be set to any value within the measuring range limits listed in the table if:

— Set span ≥ minimum span

9.1.4 Damping

Configurable time constant between 0 and 60 s.

This is in addition to the sensor response time, and can be adjusted via the optional LCD indicator, handheld terminal, or PC user interface.

9.1.5 Warm-up time

Ready for operation as per specifications in less than 10 s with minimum damping.

9.1.6 Insulation resistance

>100 MΩ at 500 V DC (between terminals and ground).

9.2 Operating limits

9.2.1 Pressure limits

Overpressure limits

No damage will occur during transmitter operation, if they are used within the specifications and subject to the following limits:

Sensor code	Overpressure limits, 0 abs to:
C, F	1 MPa, 10 bar, 145 psi
L	0.5 MPa, 5 bar, 72.5 psi
D	2 MPa, 20 bar, 290 psi
U	6 MPa, 60 bar, 870 psi
R	20 MPa, 200 bar, 2900 psi
V	90 MPa, 900 bar, 13050 psi

Test pressure

When carrying out the transmitter pressure test, it is essential to observe the overpressure limits!

9.2.2 Temperature limits °C (°F)

Environment

Model 261GS, 261AS	Ambient temperature limits
Operating temperature range	-40 … 85 °C (-40 … 185 °F)
White oil filling	-6 to 85 °C (21 to 185 °F)
LCD display	-20 to 70 °C (-4 to 158 °F)

IMPORTANT (NOTICE)

For applications in potentially explosive atmospheres, the temperature range specified on the relevant certificate/approval must be observed.

Process

Model 261GS, 261AS	Process temperature limits
Process temperature range	-50 to 120 °C (-58 to 248 °F)
White oil filling	-6 … 120 °C (21 … 248 °F)[1]

1 ≤ 85 °C (185 °F) for operating pressures below the atmospheric pressure

Storage

Model 261GS, 261AS	Storage temperature range
Storage temperature range	-50 to 85 °C (-58 to 185 °F)
LCD display	-40 … 85 °C (-40 … 185 °F)
White oil filling	-6 to 85 °C (21 to 185 °F)

Model 261GS, 261AS	Humidity during storage
Relative humidity	Up to 75 %

9.2.3 Limits for environmental effects

Electromagnetic compatibility (EMC)

The devices conform to the requirements and tests for EMC Directive 2014/30/EU, as well as EN 61000-6-3 concerning emitted interference and EN 61000-6-1, EN 61000-6-2 concerning interference immunity.
The devices fulfill NAMUR recommendations.

Pressure Equipment Directive (PED)

The devices meet the requirements of Directive 2014/68/EU, Category III, module H.

Humidity

Relative humidity: up to 100 %.
Condensation, icing: permitted.

Vibration resistance

Acceleration up to 2 g at frequencies of up to 1000 Hz (in accordance with IEC 60068-2-6).

Shock resistance

Acceleration: 50 g
Duration: 11 ms
(according to 60068-2-27)

Humid and dusty atmospheres (IP rating)

The transmitter is dust and sand-tight, and is protected against immersion effects as defined by the following standards:

- EN60529 with IP 67 (with IP 68, IP 69K upon request)
- NEMA 4X
- JIS C0920

IP65 degree of protection with plug connection

9.3 Measuring accuracy

9.3.1 Reference conditions according to IEC 60770

- Ambient temperature TU = constant in the range 18 ... 30 °C (64 ... 86 °F)
- Humidity r.F = constant, in the range 30 ... 80 %
- Ambient pressure PU = constant in the range 950 ... 1,060 mbar.
- Measuring span based on zero point
- Transmitter with separating diaphragm or Hastelloy
- Filling fluid: silicone oil
- Supply voltage: 24 V DC
- Load with HART: 250 Ω
- Transmitter not grounded
- Characteristic curve setting: linear, 4 ... 20 mA.

Unless otherwise stated, errors are specified as a % of the measuring span value.
The accuracy of the measurement in relation to the upper range limit (URL) is affected by the turndown (TD); i.e., the ratio of the upper range limit (URL) to the set span (URL/span).

FOR OPTIMUM MEASURING ACCURACY, IT IS RECOMMENDED THAT YOU SELECT THE SENSOR CODE WHICH WILL PROVIDE THE LOWEST TD VALUE.

9.3.2 Dynamic response (according to IEC 61298-1)

Reaction time	100 ms
Time constant (63.2 % of total step response)	150 ms

9.3.3 Measuring error for setting cut-off point

Turndown	Measuring error
1:1 ... 10:1	±0.1 %
>10:1	± (0.1 + 0.005 x TD - 0.05) %

9.3.4 Ambient temperature

Thermal change in ambient temperature as regards the zero signal and span (turndown up to 6:1), in relation to the set span

Temperature range	Maximum effect on zero signal and span
-10 ... 60 °C (14 ... 140 °F)	All measuring ranges ± (0.2 % x TD + 0.2 %)
-40 ... -10 °C (-40 ... 14 °F) 60 ... 85 °C (140 ... 185 °F)	All measuring ranges ±((0.1 % / 10 K) x TD + (0.1 / 10K))

9.3.5 Temperature coefficient (T_K)

Effect of the ambient temperature per 10 K (but limited to the maximum effect of the temperature change, see previous information). The information refers to the set measuring span.

Temperature range	Effect on zero signal and span
-10 ... 60 °C (14 ... 140 °F)	Sensor code C, F: ± (0.15 % x TD + 0.15 %)
	Sensor code L, D, U, R, V: ± (0.05 % x TD + 0.05 %)

9.3.6 Power supply

Within the specified limits for the voltage / load, the total influence is less than 0.001 % of the upper measuring range limit per volt.

9.3.7 Load

Within the specified load / voltage limits, the total influence is negligible.

9.3.8 Electromagnetic fields

Total influence is less than 0.3 % of measuring span from 80 … 1,000 MHz and for field strengths up to 10 V/m when tested with unshielded conduit, with or without meter.

9.3.9 Mounting position

Nominal position: vertical; process connection at bottom. Mounting position deviant from the standard position influence the output due to the filling liquid. With a deviation of 90° from standard position the effect is 1.12 mbar + 0.01 mbar/10K. This effect can be compensated by carrying out zero signal adjustment and configuring the mounting angle with the LCD indicator or DTM.

9.3.10 Long-term stability

±(0.10 x TD) % / year

9.3.11 Vibration effect

±(0.10 x TD) % acc. to IEC 61298-3

9.3.12 Total performance

Similar to DIN 16086
In the range -10 … 60 °C (14 … 140 °F):
0.42% of the set span (TD 1:1)
The total performance accuracy includes the measuring error (non-linearity including hysteresis and non-reproducibility), as well as the thermal change in the ambient temperature as regards the zero signal and span.

$$E_{perf} = \sqrt{(E_{\Delta TS1} + E_{\Delta TS2})^2 + E_{lin}{}^2}$$

E_{perf} = Base accuracy
$E_{\Delta TS1}$ = Effect of the ambient temperature on the URL
$E_{\Delta TS2}$ = Effect of the ambient temperature on the measuring span
E_{lin} = Measuring error (for setting cut-off point)

9.4 Technical specification

(Please refer to the order information to check the availability of different versions of the relevant model)

9.4.1 Materials

Process separation diaphragms[1]
Hastelloy C276, Hastelloy C276 gold plated,
Stainless steel (1.4435 / 316L)

Process connection[1]
Stainless steel (1.4404 / 316L)

Sensor filling fluid
Silicone oil, inert fill (fluorocarbon), white oil (FDA)

Mounting bracket
Stainless steel

Sensor housing, electronics housing and cover
Stainless steel (1.4404 / 316L)

Filter for atmospheric ventilation
Filter housing: plastic (standard), stainless steel (code EA, AB)
Filter material: polyamide (PA)

Viewing window in cover (LCD display)
Polycarbonate, Makrolon 6557

Cover O-ring
EPDM

Plates
Plastic data plate attached to the electronics housing

1 Wetted parts of the transmitter.

9.4.2 Calibration

Standard:
— 0 to upper range limit (URL)
Optional:
— To specified measuring span

9.4.3 Optional extras

Mounting bracket
For vertical and horizontal 60 mm (2 in.) pipes or wall mounting

LCD display
Can be rotated in 90° increments into 4 positions

Additional tag plates
Code I2: For measuring point tag (up to 30 characters) and calibration specifications (up to 30 characters: lower and upper value plus unit), attached to transmitter housing.
Code I1: For customer data (4 lines with 30 characters each), attached to transmitter housing with wire.

Cleaning stage for oxygen applications (O2)

Certificates (test, design, characteristics, material traceability)

Name plate and operating instruction language

Communication plug connectors

9.4.4 Process connections

1/2-14 NPT female or male thread, DIN EN 837-1 G 1/2 B or G 1/2 B (HP) for convex seal, flush diaphragm, for installation in ball valve.

9.4.5 Electrical connections

M16 x 1.5 tap hole with cable gland (cable diameter approx. 5 … 10 mm), directly on housing
or
M20 x 1.5 (via adapter) with cable gland (cable diameter approx. 6 … 11 mm)
or
1/2-14 NPT (via adapter) without cable gland
or
Harting Han plug connector (with mating plug (socket outlet, for wire diameters of 0.75 … 1 mm^2 and cable diameters of 5 … 11 mm))
or
Miniature plug connector (without mating plug (socket outlet))

Terminals

HART version:
Two connections for signal / auxiliary power, for wire cross-sections from 0.5 … 1.5 mm^2 (16 AWG)

Grounding (optional)

External ground terminals for wire cross-sections up to 4 mm^2 (12 AWG).

9.4.6 Weight

(without options)

— Approx. 0.7 kg (1.54 lb)
— Additional 650 G (1.5 lb)

9.4.7 Packaging

Carton with dimensions of approx. 240 x 140 x 190 mm (9.45 x 5.51 x 7.48 in.)

9.5 Mounting dimensions

(not design data) - dimensions in mm (inch)

9.5.1 Standard version

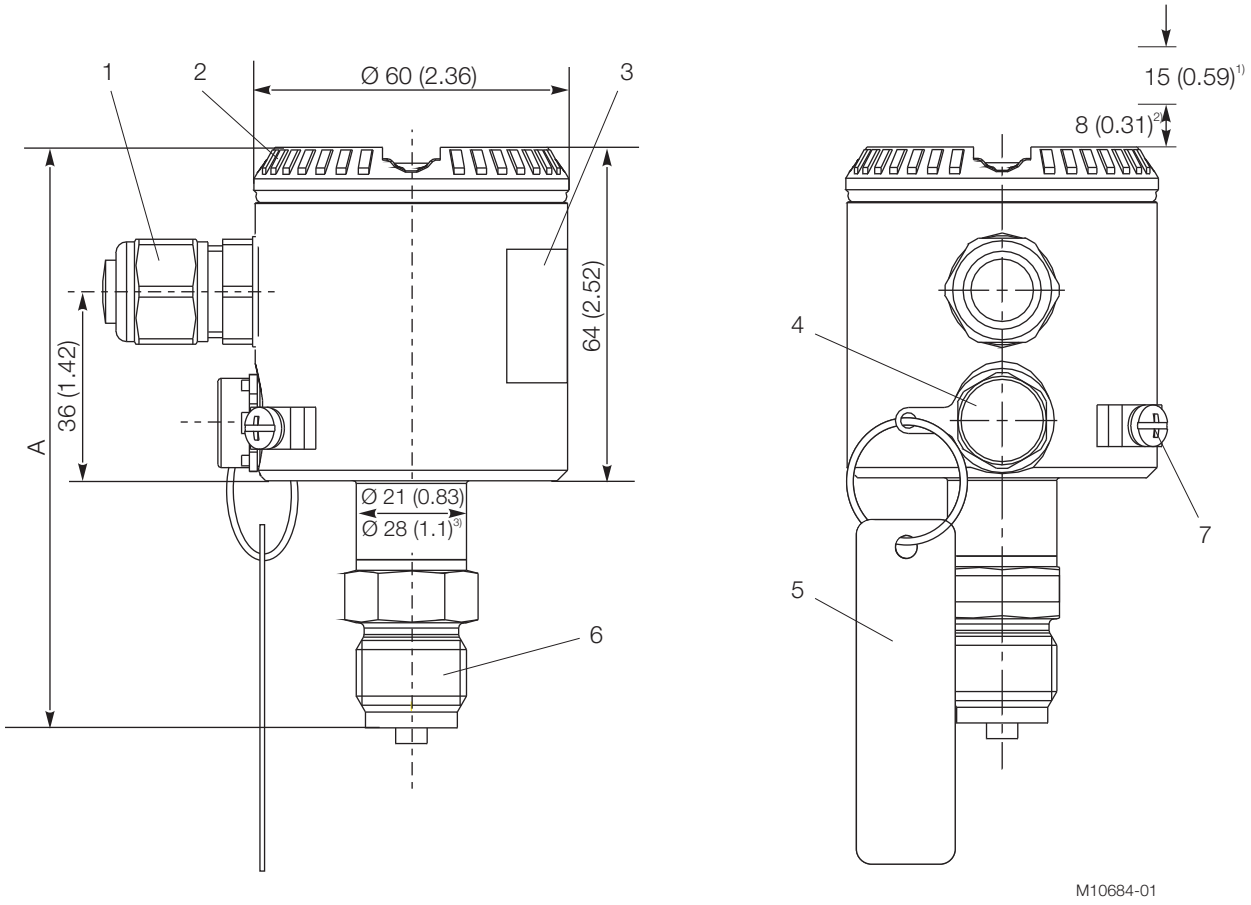

Fig. 24: Dimensions — standard design
1 Electrical connection | 2 Housing cover | 3 Name plate | 4 Filter for atmospheric compensation | 5 Tag (optional) | 6 Process connection | 7 Grounding/equipotential bonding terminal (optional)

1) Clearance for cover removal required
2) With LCD indicator
3) Dimensions for sensor code C, F

Dimension "A" is dependent on the process connection as per the following table:

Process connection	Dimension "A" in mm (inch)
1/2-14 NPT male thread	111 (4.37)
1/2-14 NPT female thread	106 (4.17) / (110 (4.33) sensor V)
DIN EN 837-1 G 1/2 B	111 (4.37)
DIN EN 837-1 G 1/2 B (HP) for connections with convex seal	121 (4.76)

9.5.2 Version with the options “LCD indicator” and “Harting Han plug”

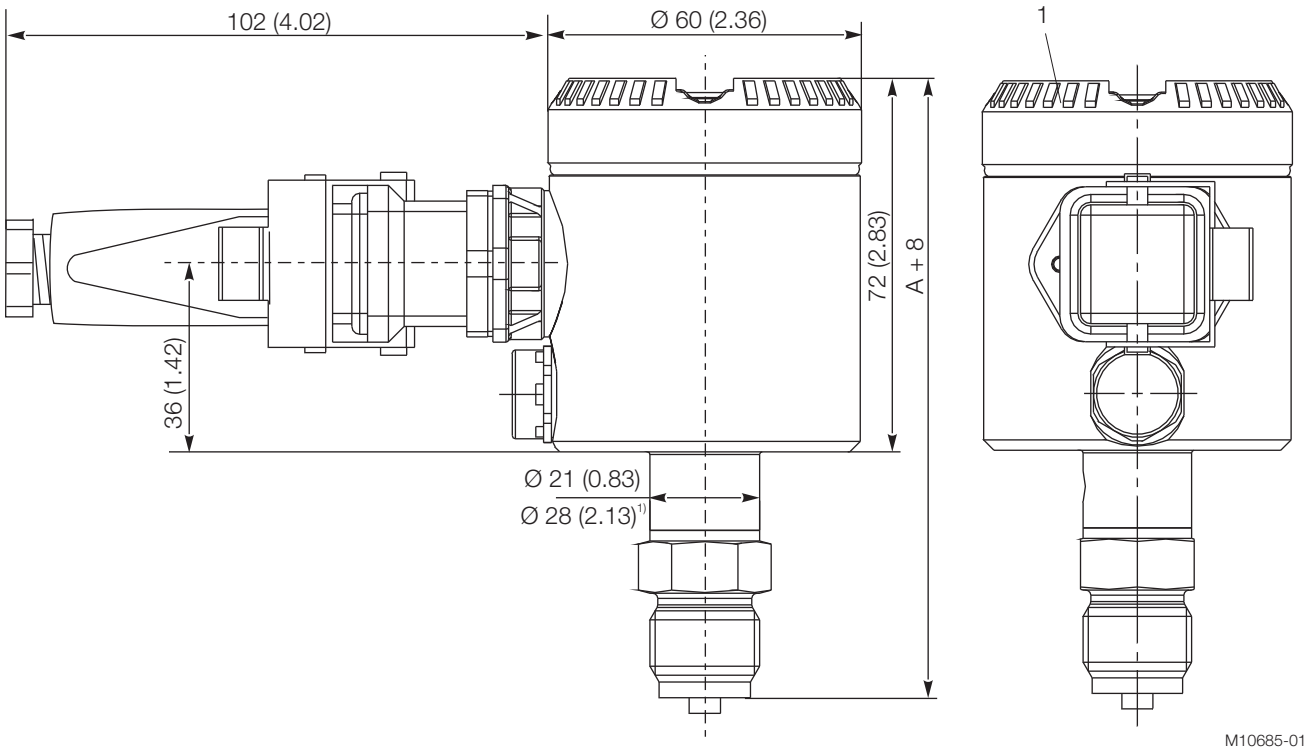

Fig. 25: Dimensions — with options
1 Housing cover for LCD indicator option

1 Dimensions for sensor code C, F

Dimension "A" is dependent on the process connection as per the following table:

Process connection	Dimension "A" in mm (inch)
1/2-14 NPT male thread	111 (4.37)
1/2-14 NPT female thread	106 (4.17) / (110 (4.33) sensor V)
DIN EN 837-1 G 1/2 B	111 (4.37)
DIN EN 837-1 G 1/2 B (HP) for connections with convex seal	121 (4.76)

9.5.3 Transmitter with flush diaphragm

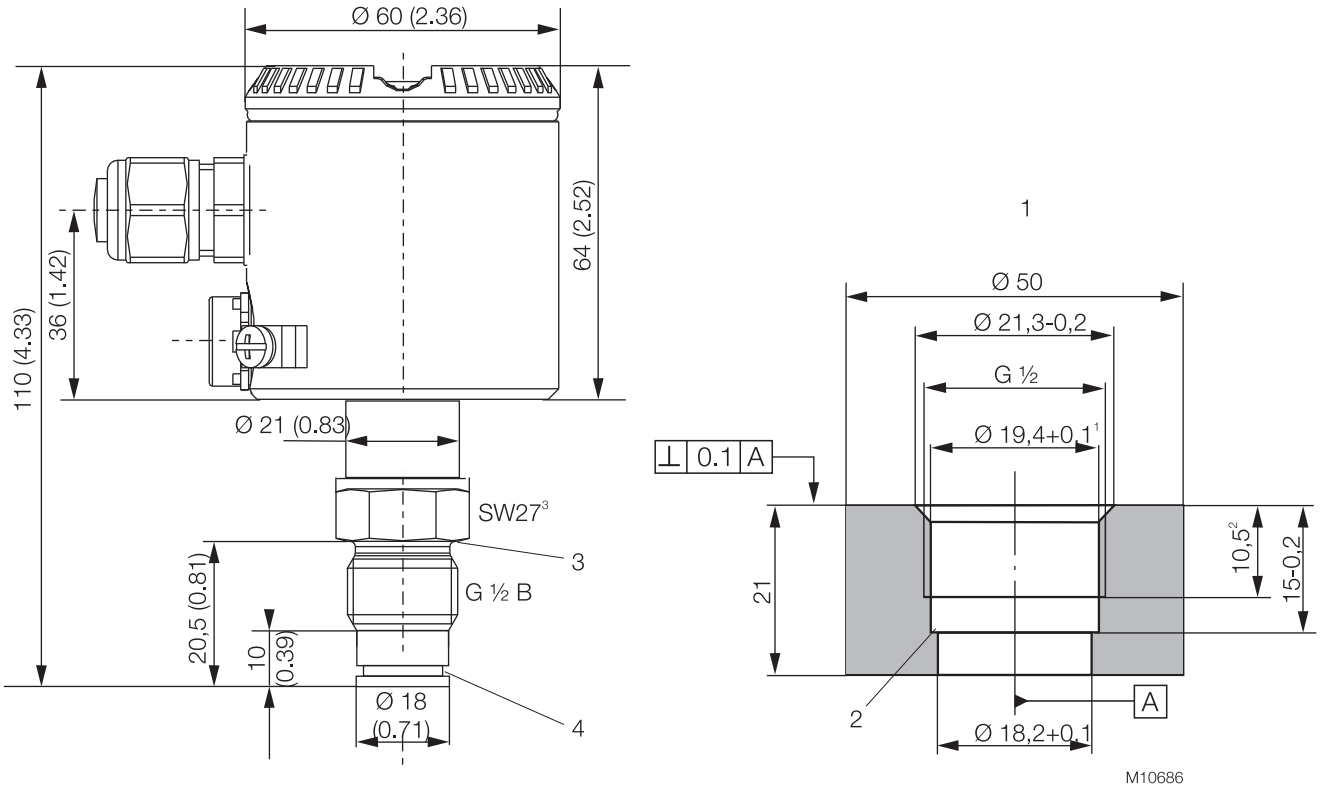

Fig. 26: Dimensions - With flush diaphragm
1 Welded connections / tapped hole for flush diaphragm, part no. 284903 | 2 No burrs | 3 Groove for gasket DIN 3869 - 21 18.5 x 23.9 x 1.5 | 4 Groove for O-ring 15 x 2

1 Bevel after cutting threads
2 Minimum dimension
3 Wrench size 27

9.5.4 Version with ball valve connection

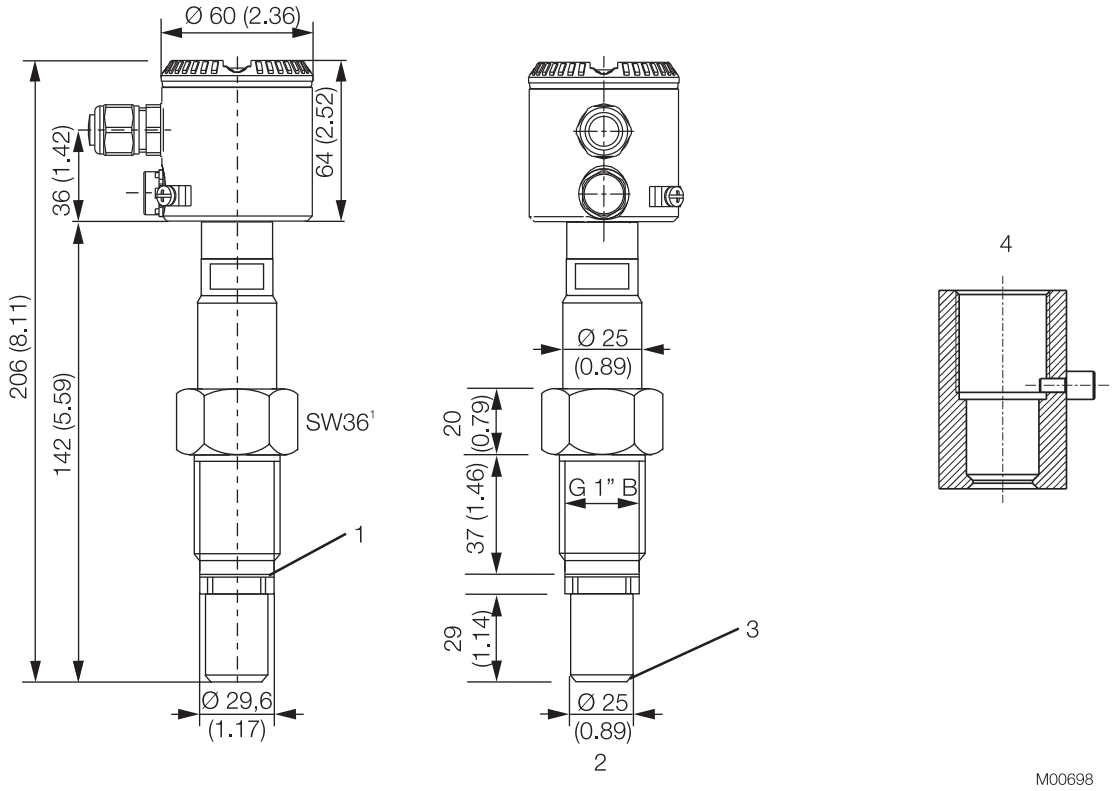

Fig. 27: Dimensions - With ball valve connection
1 Shim | 2 Diaphragm diameter: ~ 20 mm (0.79 inch) | 3 metal / metal conical seal, diaphragm is process-bonded | 4 Weld-in sleeve G 1", part no.: 789516

1 Wrench size 36

9.5.5 Mounting with angle bracket (optional)

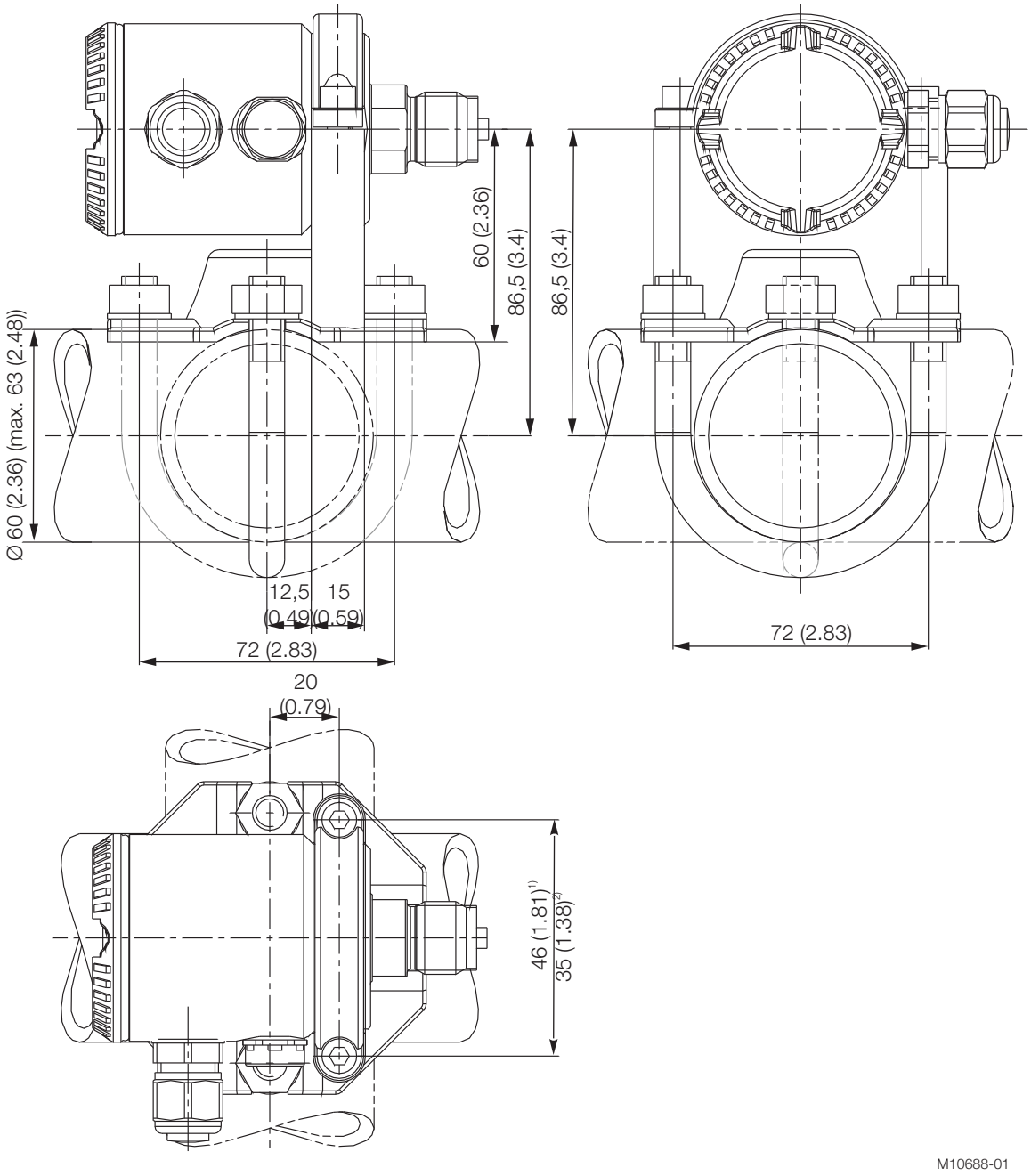

Fig. 28: Dimensions — pipe mounting/wall mounting

1) Dimensions for sensor code C, F
2) Sensor code L, D, U, 1, R, V

IMPORTANT (NOTICE)

The bracket for wall or pipe mounting has four holes with a Ø of 10.5 mm. The holes are arranged in a square and spaced 72 mm away from one another.

10 Maintenance / Repair

⚠ WARNING

Bodily injury!

The device can be operated at high pressure and with aggressive media. Any medium that squirts out can cause severe injuries.

Depressurize the pipeline/tank before opening the transmitter connection.

NOTICE – Potential damage to device as a result of electrostatic charging!

When the housing is open, EMC protection is impaired and there is no longer any protection against accidental contact.

Do not touch conductive parts of the device.

Corrective maintenance work may only be performed by trained personnel.

Before removing the device, depressurize it and any adjacent lines or containers.

Check whether hazardous materials have been used as materials to be measured before opening the device. Residual amounts of hazardous material may still be present in the device and could escape when it is opened.

Within the scope of operator responsibility, check the following as part of a regular inspection:

— the pressure-carrying walls / lining of the pressure device
— the measurement-related function
— the leak tightness
— the wear (corrosion)

If pressure transmitters are used as intended under normal operating conditions, no maintenance is required.

It is sufficient to check the output signal at regular intervals (in accordance with the operating conditions), as described in the instructions in the section "Operation". If deposits are expected to accumulate, the measuring equipment should be cleaned on a regular basis, in accordance with the operating conditions.

Cleaning should ideally be carried out in a workshop.

10.1 Removal

WARNING – Potential danger if device is disassembled incorrectly!

Before removing or disassembling the device, check for hazardous process conditions such as pressure on the device, high temperatures, aggressive or toxic media, and so on.

Carefully read the instructions in the ‘Safety’, ‘Mounting’, and ‘Electrical connections’ chapters, and perform the specified steps in reverse order.

11 Appendix

11.1 Approvals and certifications

CE mark

The version of the device as provided by us meets the requirements of the following EU directives:

- EMC Directive 2014/30/EU
- Pressure Equipment Directive (PED) 2014/68/EU

Explosion protection

Designation relating to intended use in potentially explosive atmospheres in compliance with:

- ATEX Directive (additional identification with CE mark)

NOTICE

All documentation, declarations of conformity, and certificates are available in ABB's download area.
www.abb.com/pressure

Statement on the contamination of devices and components

Repair and / or maintenance work will only be performed on devices and components if a statement form has been completed and submitted.
Otherwise, the device / component returned may be rejected. This statement form may only be completed and signed by authorized specialist personnel employed by the operator.

Customer details:

Company:	
Address:	
Contact person:	Telephone:
Fax:	E-Mail:

Device details:

Typ:	Serial no.:
Reason for the return/description of the defect:	

Was this device used in conjunction with substances which pose a threat or risk to health?

☐ Yes ☐ No

If yes, which type of contamination (please place an X next to the applicable items)?

Biological	☐	Corrosive / irritating	☐	Combustible (highly / extremely combustible)	☐
Toxic	☐	Explosiv	☐	Other toxic substances	☐
Radioactive	☐				

Which substances have come into contact with the device?

1.
2.
3.

We hereby state that the devices / components shipped have been cleaned and are free from any dangerous or poisonous substances.

Town/city, date	Signature and company stamp

Notizen

ABB Limited
Measurement & Analytics
Howard Road, St. Neots
Cambridgeshire, PE19 8EU
UK
Tel: +44 (0)870 600 6122
Fax: +44 (0)1480 213 339
Email: enquiries.mp.uk@gb.abb.com

ABB Inc.
Measurement & Analytics
125 E. County Line Road
Warminster, PA 18974
USA
Tel: +1 215 674 6000
Fax: +1 215 674 7183

ABB Automation Products GmbH
Measurement & Analytics
Schillerstr. 72
32425 Minden
Germany
Tel: +49 571 830-0
Fax: +49 571 830-1806

ABB S.p.A.
Measurement & Analytics
Via Luigi Vaccani 4
22016 Tremezzina (CO)
Italy
Tel: +39 0344 58111
Email: abb.instrumentation@it.abb.com

abb.com/pressure

We reserve the right to make technical changes or modify the contents of this document without prior notice. With regard to purchase orders, the agreed particulars shall prevail.
ABB does not accept any responsibility whatsoever for potential errors or possible lack of information in this document.
We reserve all rights in this document and in the subject matter and illustrations contained therein. Any reproduction, disclosure to third parties or utilization of its contents – in whole or in parts – is forbidden without prior written consent of ABB.
Copyright© 2018 ABB
All rights reserved

3KXP200001R4201

IM/261Gx/261Ax-EN Rev. 08 11.2018

ABB – TURBIDITY ANALYSERS

ABB MEASUREMENT & ANALYTICS | OPERATING INSTRUCTION

4690 Series
Turbidity systems

Accurate, reliable turbidity measurement

Measurement made easy

4690 / 4695 analyzer and a 7998 turbidity sensor

Introduction

An ABB Turbidity system comprises a 4690 / 4695 analyzer and a 7998 turbidity sensor.

The analyzer provides the operator interface and communications to other devices.

The signal from the turbidity sensor is converted by the analyzer and the information is presented on a large, custom-designed, easy-to-read, backlit liquid crystal display (LCD).

The analyzer can be programmed to work with any of the 7998 series sensors and the operating range can also be configured to meet users' requirements.

Available in wall- / pipe-mount or ¼ DIN panel-mount versions, the analyzer is protected to IP66, ensuring reliable operation in the most demanding situations. The same level of protection is maintained during programming and calibration.

For more information

Further publications for 4690 turbidity systems are available for free download from: http://new.abb.com/products/measurement-products

The Company

We are an established world force in the design and manufacture of measurement products for industrial process control, flow measurement, gas and liquid analysis and environmental applications.

As a part of ABB, a world leader in process automation technology, we offer customers application expertise, service and support worldwide.

We are committed to teamwork, high quality manufacturing, advanced technology and unrivalled service and support.

The quality, accuracy and performance of the Company's products result from over 100 years experience, combined with a continuous program of innovative design and development to incorporate the latest technology.

Contents

1 Safety 2
1.1 Electrical Safety 2
1.2 Symbols 2
1.3 Health & Safety 2
1.4 Product Disposal 2

2 Turbidity Systems 3
2.1 7998 Sensors 3
2.2 Turbidity Measurement Systems 3

3 Installation 5
3.1 Siting Requirements 5
3.1.1 Analyzer 5
3.1.2 Turbidity Sensor 5
3.2 Mounting the Analyzer 6
3.2.1 Wall-mounting 6
3.2.2 Pipe-mounting 6
3.2.3 Panel-mounting 7
3.3 Mounting the Turbidity Sensor 8
3.3.1 Sample Flowrate 9
3.4 Installing the Optional De-bubbler 10
3.4.1 Mounting the De-bubbler 10
3.4.2 Set Up Procedure for De-bubbler 11

4 Electrical Connections 12
4.1 Access to Terminals 12
4.1.1 Wall- / Pipe-mount Analyzer 12
4.1.2 Panel-mount Analyzer 12
4.2 Safety Information 13
4.2.1 Relay Contact Protection and Interference Suppression 13
4.3 Connections 14
4.3.1 Wall- / Pipe-mount Analyzer Connections 14
4.3.2 Panel-mount Analyzer Connections 15
4.3.3 Power Supply Connections 15
4.4 Selecting the Mains Voltage 16
4.4.1 Wall- / Pipe-mount Analyzer 16
4.4.2 Panel-mount Analyzer 16
4.5 Turbidity Sensor Connections 17

5 Controls and Display 18
5.1 Display 18
5.2 Control Familiarization 18

6 Operation 19
6.1 Analyzer Start-up 19
6.2 Operation – Turbidity Measurement Mode 19
6.2.1 Operating Page 19

7 Calibration 20
7.1 Care and Maintenance of Secondary Standards 20
7.2 Performing a Calibration Verification with a Secondary Standard 21
7.3 Performing a Calibration with a Primary Standard 22

8 Configuration and Electrical Calibration 26
8.1 Access to Configuration Pages 26
8.2 Language Page 26
8.3 Set Up Parameter Page 27
8.4 Set Up Outputs Page 29
8.5 Set Up Serial Interface Page 31
8.6 Electrical Calibration 32
8.6.1 Equipment Required 32
8.6.2 Preparation 32
8.6.3 Electrical Calibration Page 33

9 Maintenance 34
9.1 Sensor Cleaning 34
9.1.1 Sensors Without Wiper Unit 34
9.1.2 Sensors With Wiper Unit 34

10 Fault Finding 35
10.1 Error Messages 35
10.2 Unstable or Erratic Readings 36
10.3 Intermittent Short Term Spikes in Turbidity Readings 36

11 Specification 37

12 Spares and Consumables 39
12.1 Maintenance Kits 39
12.2 Accessories 39
12.3 Upgrade Kits 39
12.4 Strategic Spares 39
12.5 Software 40
12.6 De-bubbler 40

1 Safety

Information in this manual is intended only to assist our customers in the efficient operation of our equipment. Use of this manual for any other purpose is specifically prohibited and its contents are not to be reproduced in full or part without prior approval of the Technical Publications Department.

1.1 Electrical Safety

This equipment complies with the requirements of CEI/IEC 61010-1 Edition 3.1 2017-01 'Safety Requirements for Electrical Equipment for Measurement, Control and Laboratory Use' and complies with US NEC 500, NIST and OSHA.

If the equipment is used in a manner NOT specified by the Company, the protection provided by the equipment may be impaired.

1.2 Symbols

One or more of the following symbols may appear on the equipment labelling:

	Warning – Refer to the manual for instructions
	Caution – Risk of electric shock
	Functional earth (ground) terminal
	Protective earth (ground) terminal

	Direct current supply only
	Alternating current supply only
	Both direct and alternating current supply
	The equipment is protected through double insulation

1.3 Health & Safety

Health and Safety

To ensure that our products are safe and without risk to health, the following points must be noted:

- The relevant sections of these instructions must be read carefully before proceeding.
- Warning labels on containers and packages must be observed.
- Installation, operation, maintenance and servicing must be carried out only by suitably trained personnel and in accordance with the information given.
- Normal safety precautions must be taken to avoid the possibility of an accident occurring when operating in conditions of high pressure and / or temperature.

Safety advice concerning the use of the equipment described in this manual or any relevant hazard data sheets (where applicable) may be obtained from the Company address, together with servicing and spares information.

1.4 Product Disposal

Note. The following only applies to European customers.

ABB is committed to ensuring that the risk of any environmental damage or pollution caused by any of its products is minimized as far as possible. The European Waste Electrical and Electronic Equipment (WEEE) Directive (2002/96/EC) that came into force on August 13 2005 aims to reduce the waste arising from electrical and electronic equipment; and improve the environmental performance of all those involved in the life cycle of electrical and electronic equipment.

In conformity with European local and national regulations (EU Directive 2002/96/EC stated above), electrical equipment marked with the above symbol may not be disposed of in European public disposal systems after 12 August 2005.

2 Turbidity Systems

2.1 7998 Sensors

Details of the individual sensors are shown in Table 2.1.

Sensor No.	Principle of Sensor	Type of Sensor	Minimum Range	Maximum Range
7998 011 (ISO 7027)	Infrared LED Nephelometric	Flow-through (with wiper unit)	0 to 1 NTU	0 to 40 NTU
7998 012 (ISO 7027)	Infrared LED Nephelometric	Flow-through (with wiper unit)	0 to 40 NTU	0 to 400 NTU
7998 016 (ISO 7027)	Infrared LED Nephelometric	Flow-through (without wiper unit)	0 to 1 NTU	0 to 40 NTU
7998 017 (ISO 7027)	Infrared LED Nephelometric	Flow-through (without wiper unit)	0 to 40 NTU	0 to 400 NTU

Table 2.1 7998 Sensor Range

2.2 Turbidity Measurement Systems

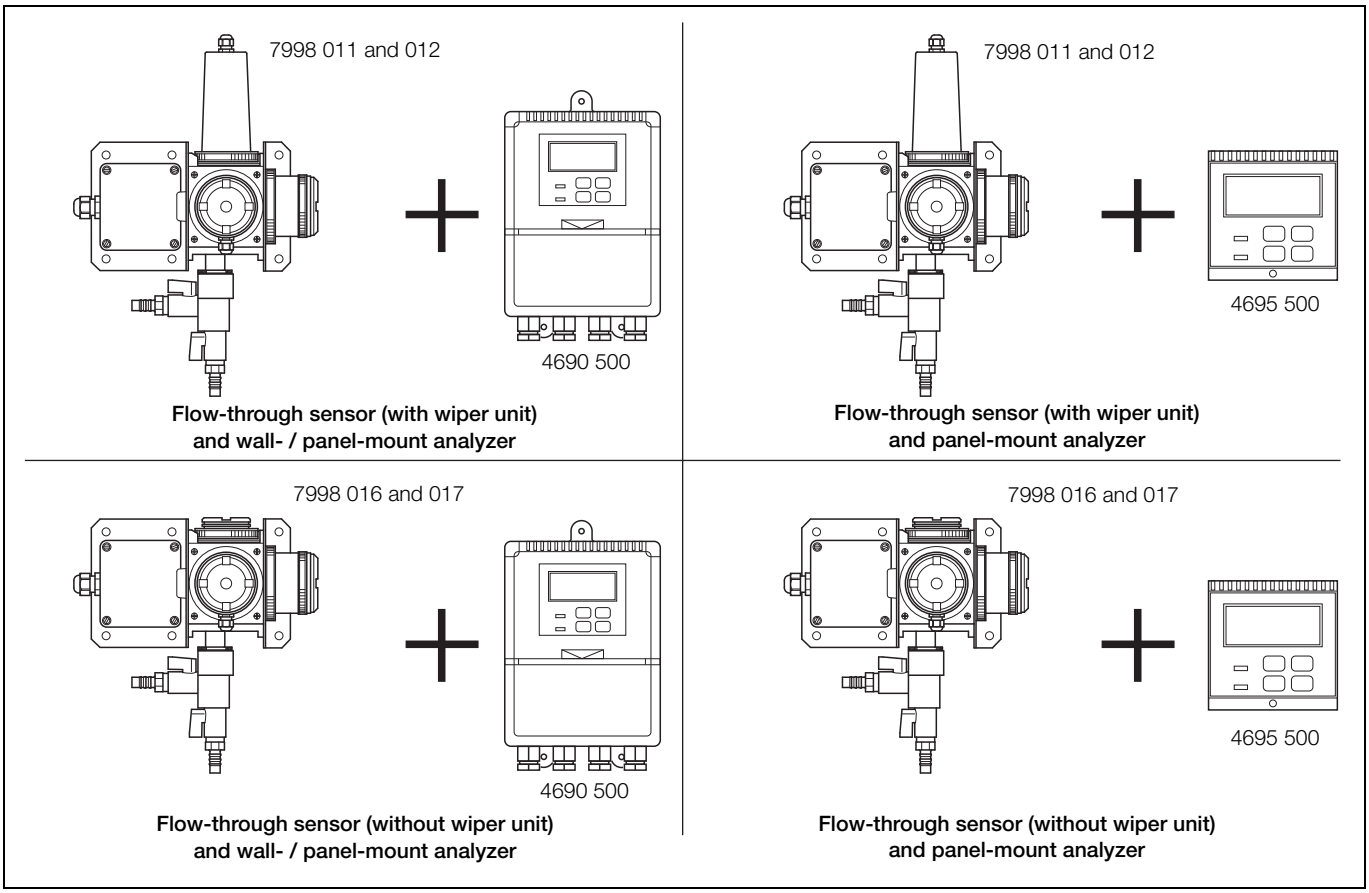

Fig. 2.1 System Arrangements

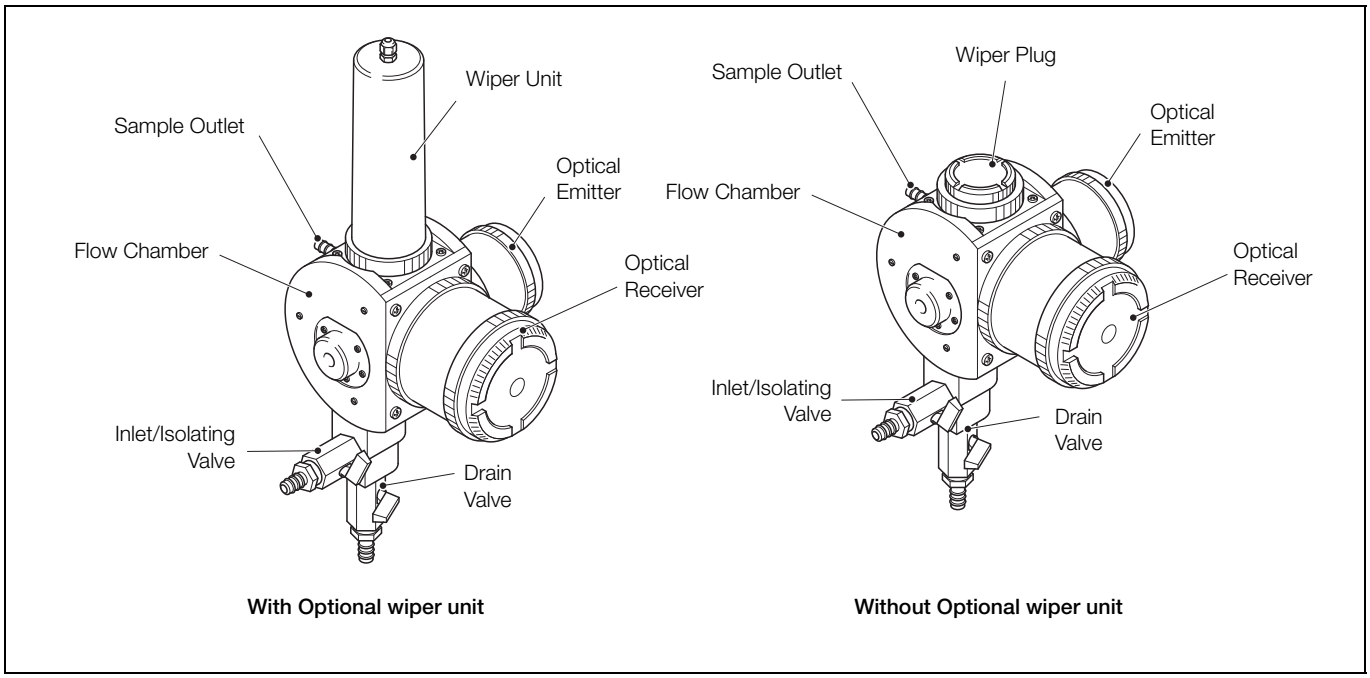

Fig. 2.2 Turbidity Sensors – Main Components

3 Installation

3.1 Siting Requirements

3.1.1 Analyzer

Caution.

- Mount in a location free from excessive vibration.
- Mount away from harmful vapors and dripping fluids.

Note. Mount the analyzer at eye level to enable an unrestricted view of the front panel displays and controls.

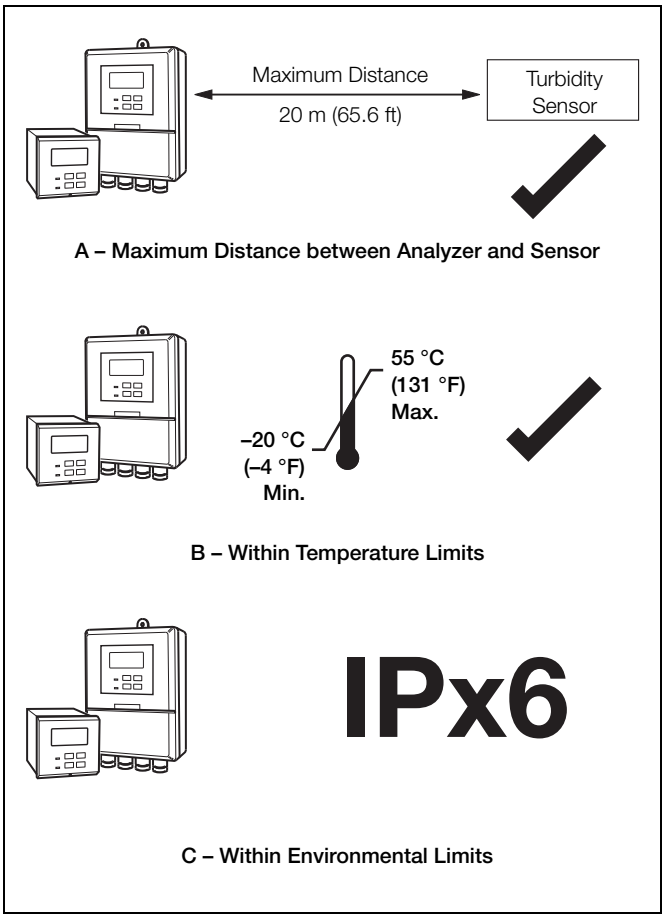

Fig. 3.1 Siting Requirements – Analyzer

3.1.2 Turbidity Sensor

To enable the turbidity sensor to be removed easily for maintenance, ensure an all-round clearance of 200 mm (7.9 in) – see Section 3.3, page 8 for the overall dimensions of the sensor.

Note. Ensure the sensor is located at an appropriate height to ensure ease of access during calibration and cleaning.

Caution. Mount the sensor in a location away from direct sunlight.

3.2 Mounting the Analyzer

3.2.1 Wall-mounting

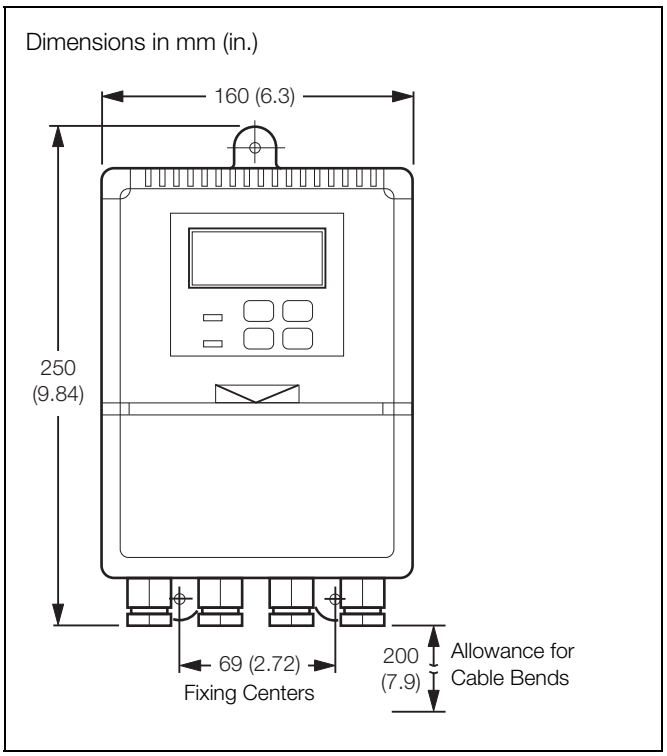

Fig. 3.2 Overall Dimensions

Referring to Fig. 3.3:

1. Mark fixing centers (see Fig. 3.2).
2. Drill suitable holes.
3. Secure analyzer to wall using suitable fixings.

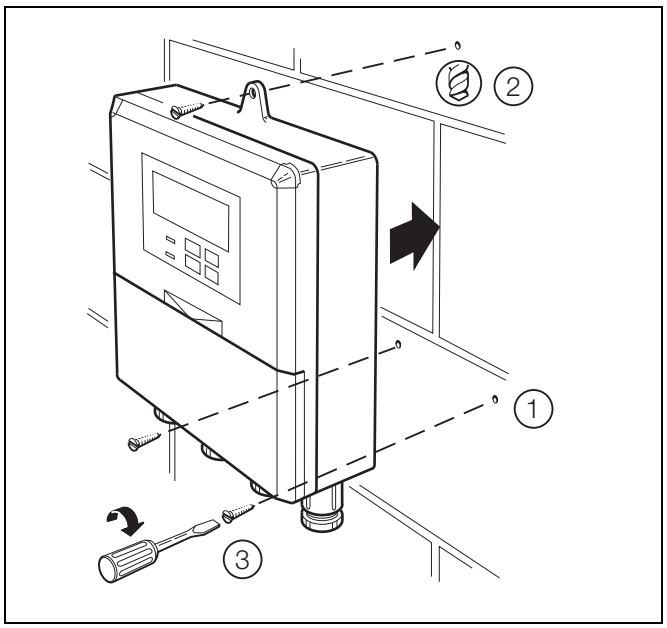

Fig. 3.3 Wall-mounting

3.2.2 Pipe-mounting

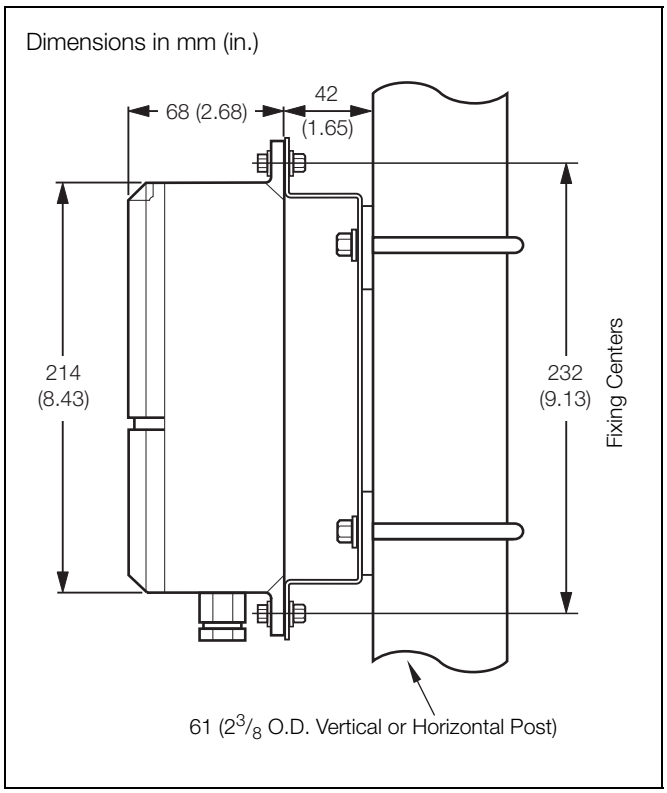

Fig. 3.4 Overall Dimensions

Referring to Fig. 3.5:

1. Position 'U' bolts on pipe.
2. Position plates over 'U' bolts.
3. Secure plates.
4. Secure analyzer to mounting plate.

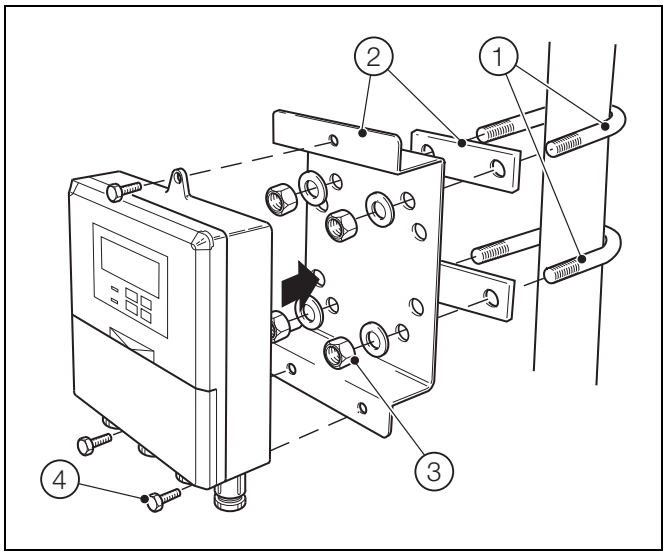

Fig. 3.5 Pipe-mounting

3.2.3 Panel-mounting

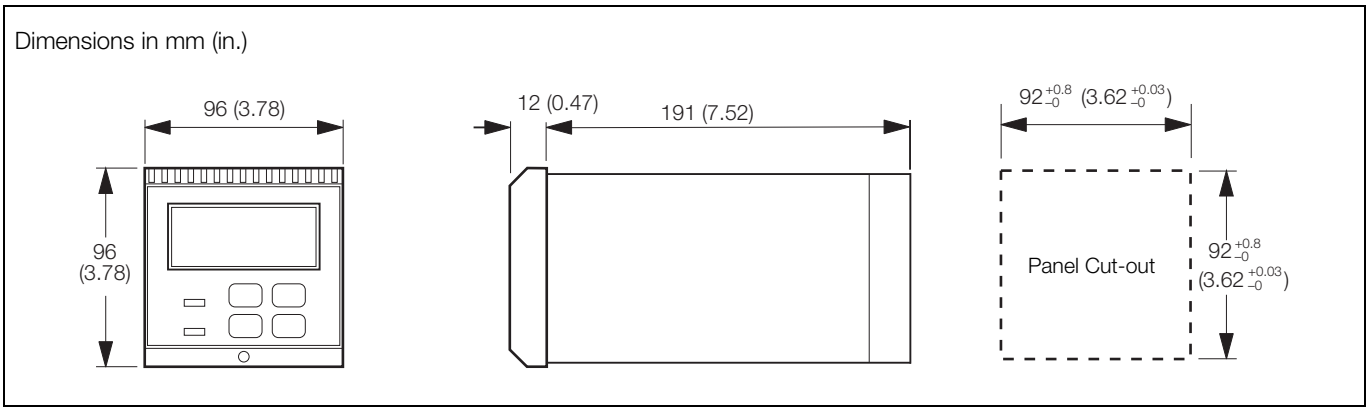

Fig. 3.6 Overall Dimensions

Referring to Fig. 3.5:

1. Cut a hole in the panel (see Fig. 3.6 for dimensions). Analyzers may be close stacked to DIN 43835.
2. Loosen the retaining screw on each panel clamp.
3. Remove the panel clamp and anchors from the analyzer case.
4. Insert the analyzer into the panel cut-out.
5. Refit the panel clamps to the case, ensuring that the panel clamp anchors are located correctly in their slot.
6. Secure the analyzer by tightening the panel clamp retaining screws.

Caution. The clamp must fit flat on the analyzer casing. If the clamp is bowed, the securing screw is overtight and sealing problems may occur.

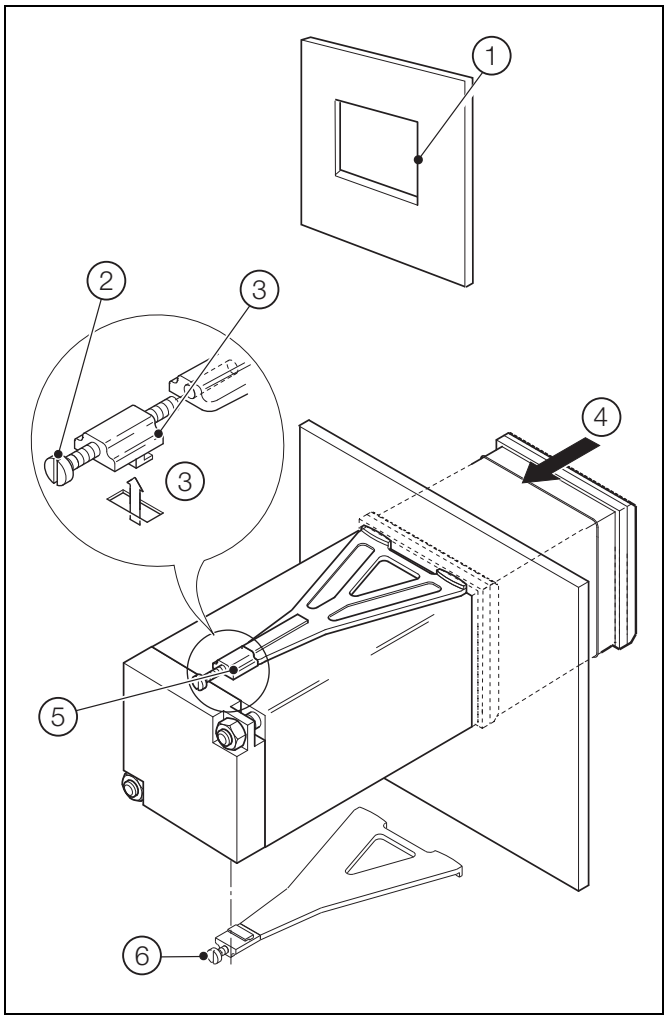

Fig. 3.7 Panel-mounting

3.3 Mounting the Turbidity Sensor

Systems and sensors are shown in Table 2.1 on page 3. The main components of each sensor are identified in Fig. 2.2 on page 4.

Referring to Figs 3.8 or 3.9:

1. Mount the sensor in the orientation shown using the bracket(s) provided, ensuring it is mounted within 5° of its vertical axis.
2. Connect the sample inlet and sample drain tubes.
3. Referring to Fig. 3.10, connect the sample outlet tube.

Dimensions in mm (in)

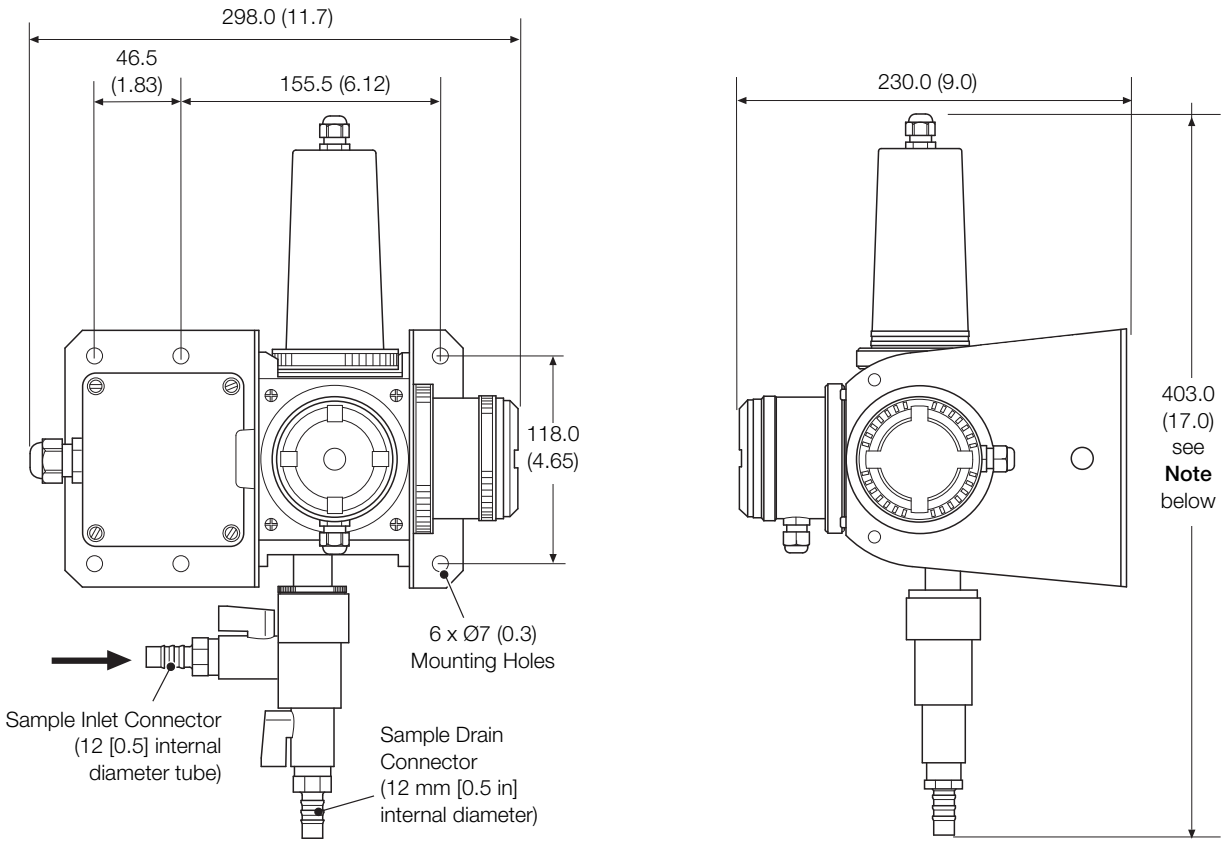

Fig. 3.8 Sensor Dimensions (With Optional Wiper Unit)

Note. Allow a further 30 mm (1.2 in) (approximately) clearance above the wiper unit for the bend in the wiper unit cable.

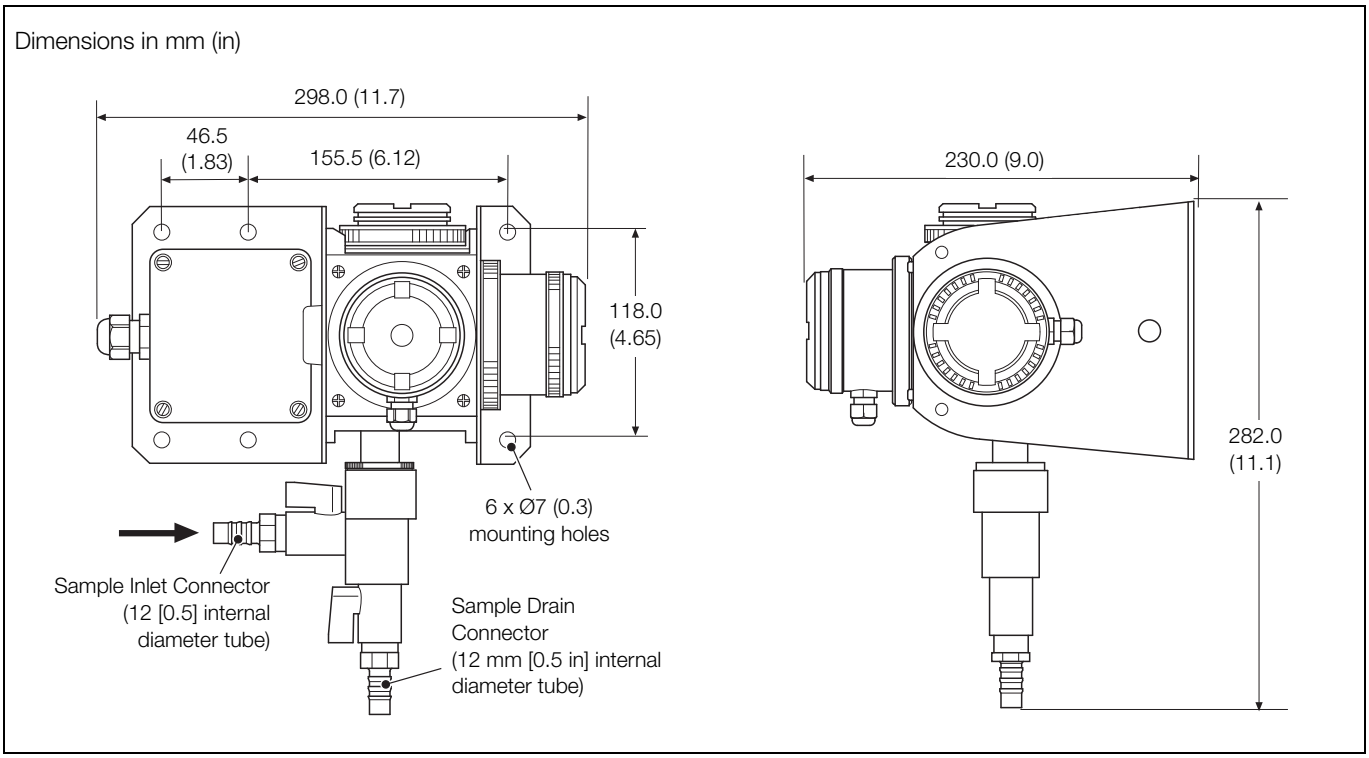

Fig. 3.9 Sensor Dimensions (Without Optional Wiper Unit)

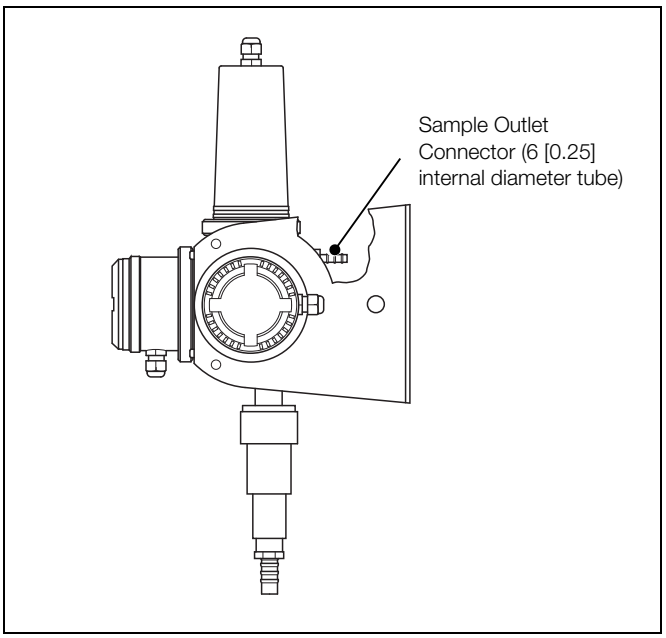

Fig. 3.10 7998 Series – Sample Outlet Connector Location

3.3.1 Sample Flowrate

Set a minimum flowrate of 0.5 l min^{-1} to prevent solids settling in the pipework. Increase the flowrate if necessary but **do not** exceed the maximum flow rate of 1.5 l min^{-1}.

When measuring turbidity, it is important that additional sources of light scattering, such as gas bubbles in the sample, are eliminated. An optional debubbler (part number 7997 500) is available to eliminate gas bubbles – refer to Section 3.4, page 10.

3.4 Installing the Optional De-bubbler

3.4.1 Mounting the De-bubbler

Note. The de-bubbler **MUST** be mounted vertically with the flow upwards.

Dimensions in mm (in)

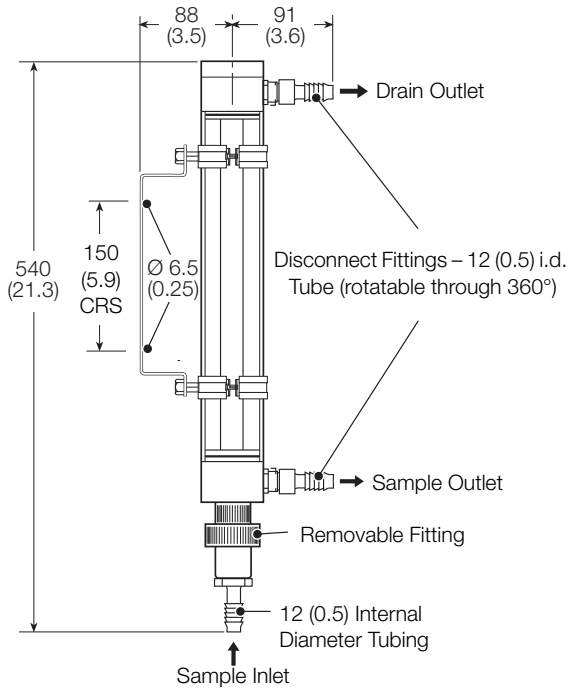

Fig. 3.11 De-Bubbler Mounting Information (Debubbler Part Number 7997 500)

3.4.2 Set Up Procedure for De-bubbler

With a system that includes a de-bubbler, referring to Fig. 3.12:

1. Open the 'sample in' isolating valve (A) such that the overflow from the de-bubbler is at a minimum.
2. Adjust the sample flow through the turbidity system using flow regulating valve (B).

Note. Sample regulating valves together with a flow indicator are recommended to ensure easy maintenance and consistent performance. These devices are not supplied with the 7998 Turbidity systems.

Dimensions in mm (in)

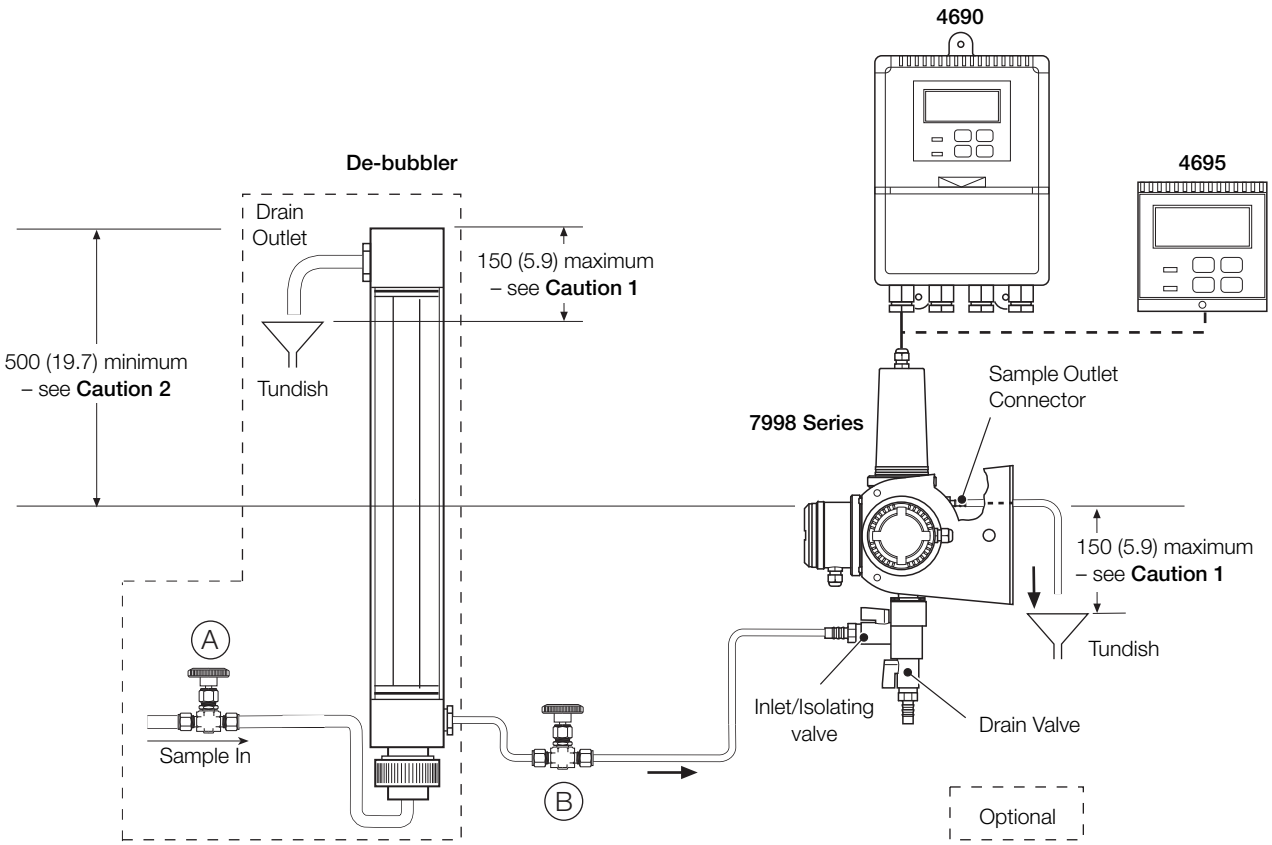

Fig. 3.12 Typical System Installation for 7998 Series Turbidity Systems

Caution.

1. To prevent degassing of the sample and very erratic readings, do not exceed this measurement.
2. This is the minimum installation distance that ensures adequate flowrate through the sensor. Increase this distance as necessary if using long or small-bore tubing.

4 Electrical Connections

Warning.

- The analyzer is not fitted with a switch – an isolation device such as a switch or circuit breaker conforming to local safety standards must be fitted to the final installation. It must be fitted in close proximity to the analyzer, within easy reach of the operator and marked clearly as the isolation device for the analyzer.
- Remove all power from supply and relays before accessing or making any connections. Use cable appropriate for the load currents: 3-core cable rated 3 A and 75 °C (167 °F) minimum, and voltage: 100 / 240V that conform to either IEC 60227 or IEC 60245, or to the National Electrical Code (NEC) for the US, or the Canadian Electrical Code for Canada.
- Use cable appropriate to the load currents.
  The 4690 (wall mounted) and 4695 (panel mounted) terminals accept cables AWG 24 to 14 (0.2 to 2 mm^2). All connections to secondary circuits must have insulation to required local safety standards. After installation, there must be no access to live parts, for example, terminals. Use screened cable for signal inputs and relay connections. Route signal leads and power cables separately, preferably in an earthed (grounded) flexible metal conduit.

USA and Canada only

- The supplied cable glands and use of cable / flexible cord for connection of the mains power source to the mains input and relay contact output terminals is not permitted in the USA or Canada.
- For connection to mains (the mains input and relay contact outputs), use only suitably rated field wiring insulated copper conductors rated min. 300 V, 16 AWG, 90 °C. Route wires through suitably rated flexible conduits and fittings.

Warning – Bodily injury

- If the analyzer is used in a manner not specified by the Company, the protection provided by the equipment may be impaired.
- The analyzer conforms to CEI/IEC 61010-1 Edition 3.1 2017-01 Installation Category II.
- All equipment connected to the analyzer's terminals must comply with local safety standards (IEC 60950, IEC 61010-1).

4.1 Access to Terminals

4.1.1 Wall- / Pipe-mount Analyzer

Referring to Fig. 4.1:

(1) Slide cover down, pull out slightly and slide it off.
(2) Release captive screws.
(3) Remove protection cover.

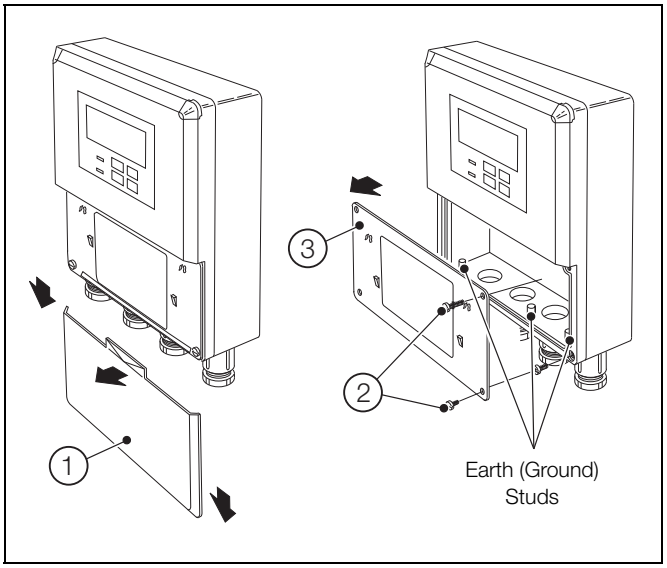

Fig. 4.1 Access to Terminals – Wall- / Pipe-mount Analyzer

4.1.2 Panel-mount Analyzer

Referring to Fig. 4.2:

(1) Remove securing nuts.
(2) Remove cover.
(3) Remove mains terminals protection cover.

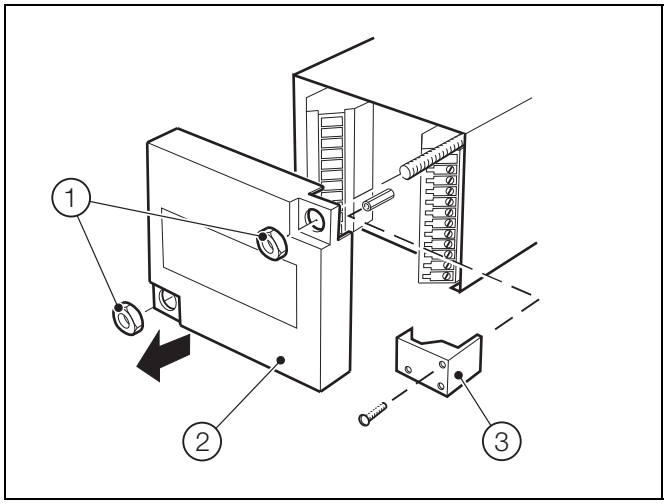

Fig. 4.2 Access to Terminals – Panel-mount Analyzer

4.2 Safety Information

Warning. The power supply earth (ground) **must** be connected to ensure safety to personnel, reduction of the effects of RFI and correct operation of the power supply interference filter.

Note.

- Stud terminal(s) is (are) fitted to the analyzer case for bus-bar earth (ground) connection – see Figs. 4.1, 4.4 and 4.5.
- The cable length between the turbidity sensor and the 4690 / 4695 analyzer is provided as ordered and terminated at the sensor. Shorten or lengthen the cable as required for the installation.
- Always route the signal cable and mains-carrying/relay cables separately, ideally in earthed (grounded) metal conduit.

  Ensure that the cables enter the analyzer through the glands nearest the appropriate screw terminals and are short and direct. Do not tuck excess cable into the terminal compartment.
- Ensure a moisture-tight fit when using cable glands, conduit fittings and blanking plugs/bungs (M20 holes). The M16 glands ready-fitted to wall-mount analyzers accept cable of between 4 and 7 mm diameter.
- The relay contacts are voltage-free and must be connected appropriately in series with the power supply and the alarm/control device that they are to actuate. Ensure that the contact rating is not exceeded. Refer also to Section 4.2.1 for relay contact protection details when the relays are to be used for switching loads.
- Do not exceed the maximum load specification for the selected current retransmission range – refer to Section 11, page 37.

  The retransmission output is isolated therefore the –ve terminal **must** be connected to earth (ground) if connecting to the isolated input of another device.

4.2.1 Relay Contact Protection and Interference Suppression

If the relays are used to switch loads on and off, the relay contacts can become eroded due to arcing. Arcing also generates radio frequency interference (RFI) that can cause analyzer malfunction and incorrect readings. To minimize the effects of RFI, arc suppression components are required; resistor/capacitor networks for AC applications or diodes for DC applications. These components can be connected either across the load or directly across the relay contacts. On 4690 / 4695 analyzers, fit the RFI components to the relay terminal block together with the supply and load wires – see Fig. 4.3.

For AC applications, the value of the resistor/capacitor network depends on the load current and inductance that is switched. Initially, fit a 100R/0.022 µF RC suppressor (part no. B9303) as shown in Fig. 4.3A. If the analyzer malfunctions (incorrect readings) or resets (display shows *88888*) the value of the RC network is too low for suppression – use an alternative value. If the correct value cannot be obtained, contact the manufacturer of the switched device for details on the RC unit required.

For DC applications, fit a diode as shown in Fig. 4.3B. For general applications use an IN5406 type (600 V peak inverse voltage at 3A – part no. B7363).

Note. For reliable switching, the minimum voltage must be greater than 12 V and the minimum current greater than 100 mA.

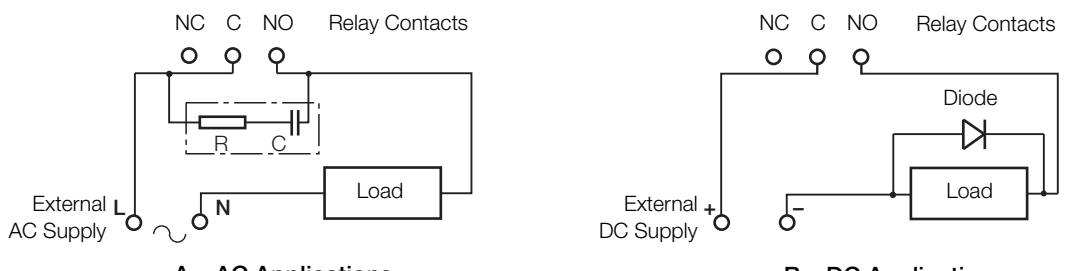

Fig. 4.3 Relay Contact Protection

4.3 Connections

Mounting	Terminal Number						
Wall	1	2	3	4	5	6	7
Panel	12	11	10	9	8	7	6
	Cleaner initiate pulse	+12 V Switched emitter supply	+12 V Cleaner / Receiver supply	Signal input	Cleaner detect signal		0 V common
							Link

Table 4.1 Analyzer Input Connections

4.3.1 Wall- / Pipe-mount Analyzer Connections

Note.

- Refer to Fig. 4.1, page 12 for access to terminals.
- Slacken terminal screws fully before making connections.

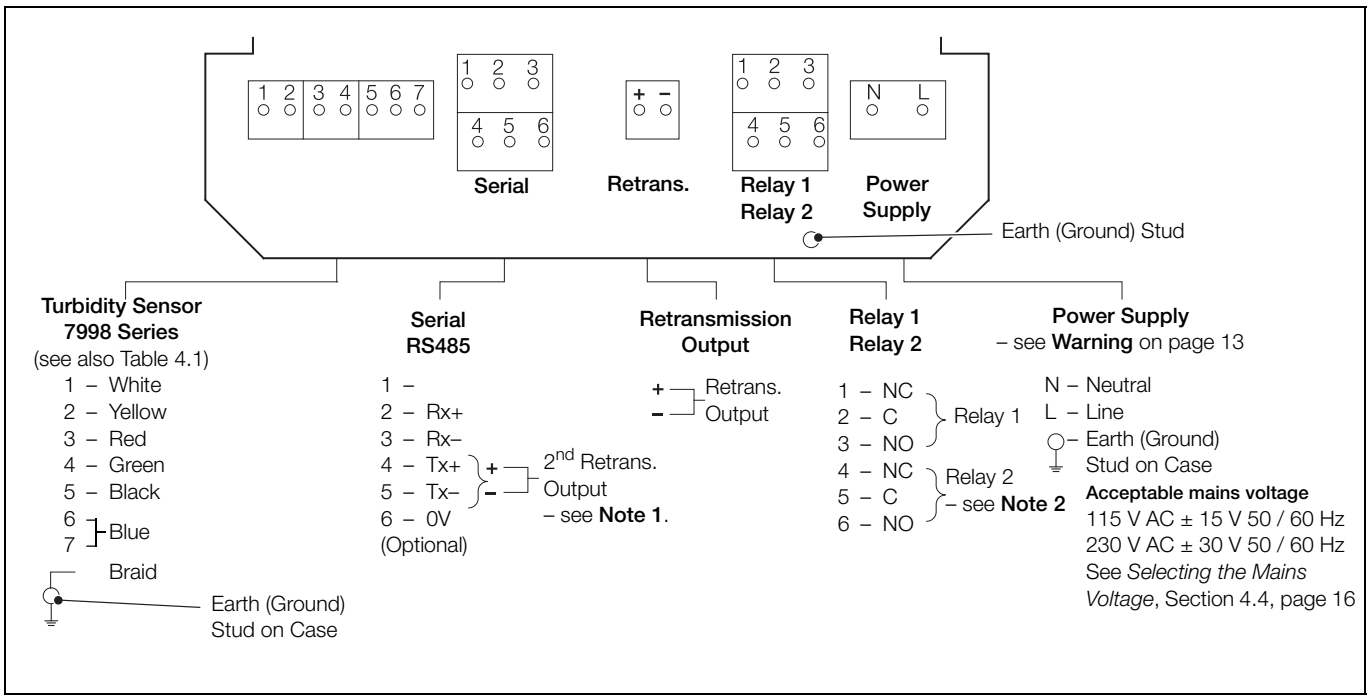

Fig. 4.4 Wall- / Pipe-mount Analyzer Connections

Note.

1. A second retransmission output is available if the RS485 serial communications facility is not used.
2. If **Test Cleaner** is set to YES (see page 28), Relay 2 becomes 'Failed Wiper Alarm' relay.

4.3.2 Panel-mount Analyzer Connections

Note.

- Refer to Fig. 4.2, page 12 for access to terminals.
- Slacken terminal screws fully before making connections.

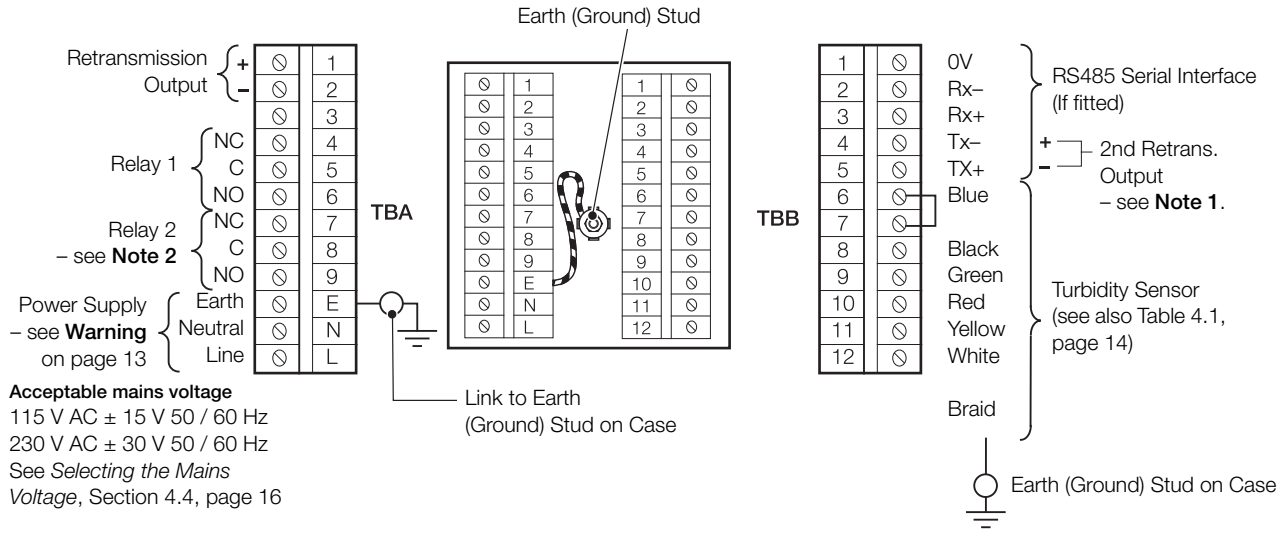

Fig. 4.5 Panel-mount Analyzer Connections

Note.

1. A second retransmission output is available if the RS485 serial communications facility is not used.
2. If **Test Cleaner** is set to YES (see page 28), Relay 2 becomes 'Failed Wiper Alarm' relay.

4.3.3 Power Supply Connections

Referring to Figures 4.4, page 15 and 4.5:

Make connections to the power supply terminals as follows:

- L (line), N (neutral), Stud on case (ground)

Note. Tighten terminal screws to a torque of 0.1 Nm (0.9 lbf.in).

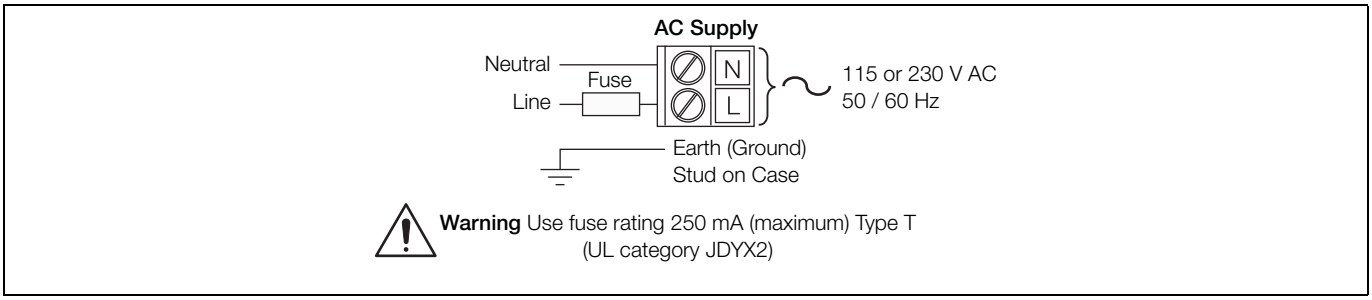

Fig. 4.6 AC Power Supply Connections

4.4 Selecting the Mains Voltage

4.4.1 Wall- / Pipe-mount Analyzer

Referring to Fig. 4.7:

1. Slide cover down, pull out slightly and slide it off.
2. Release 4 captive screws.
3. Remove protection cover.
4. Remove 2 screw caps (if fitted).
5. Remove 6 front panel screws.
6. Remove front panel.
7. Set voltage selector switch as required.

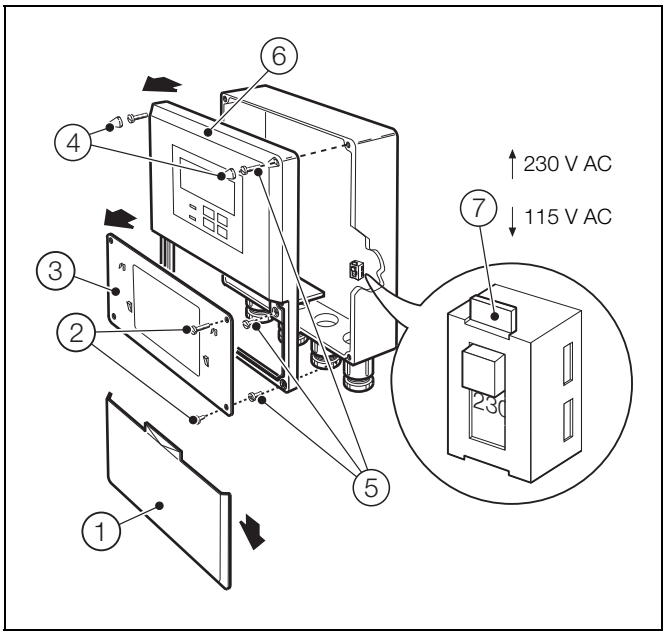

Fig. 4.7 Selecting Mains Voltage – Wall- / Pipe-mount Analyzer

4.4.2 Panel-mount Analyzer

Referring to Fig. 4.8:

1. Release captive screw.
2. Remove analyzer from its case.
3. Set voltage selector switch as required.

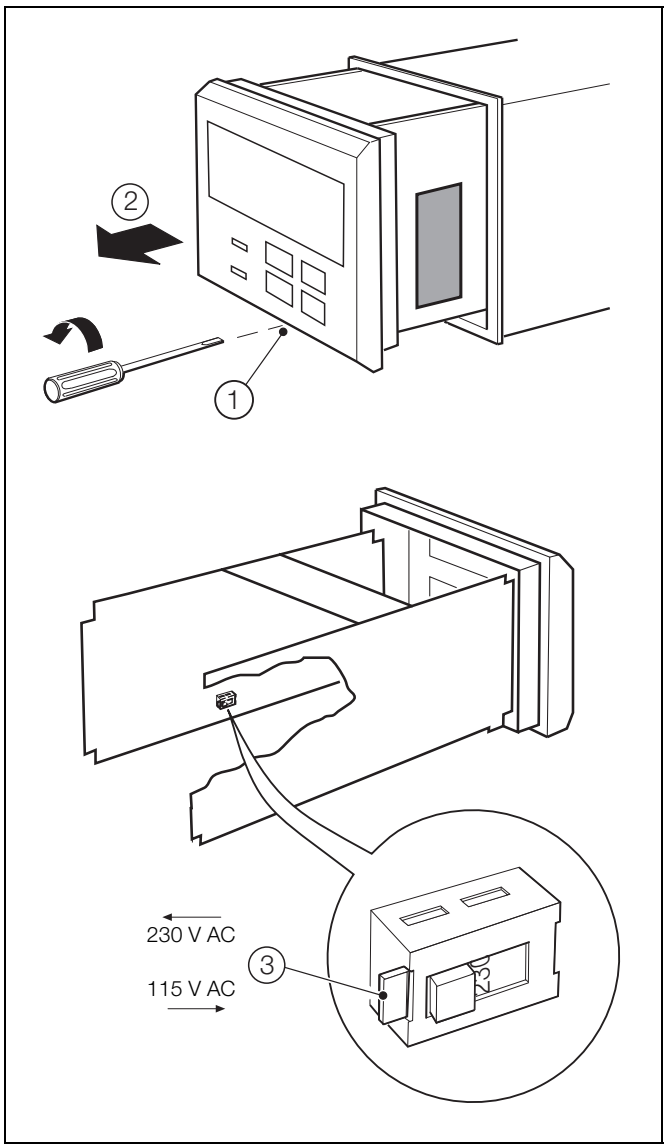

Fig. 4.8 Selecting Mains Voltage – Panel-mount Analyzer

4.5 Turbidity Sensor Connections

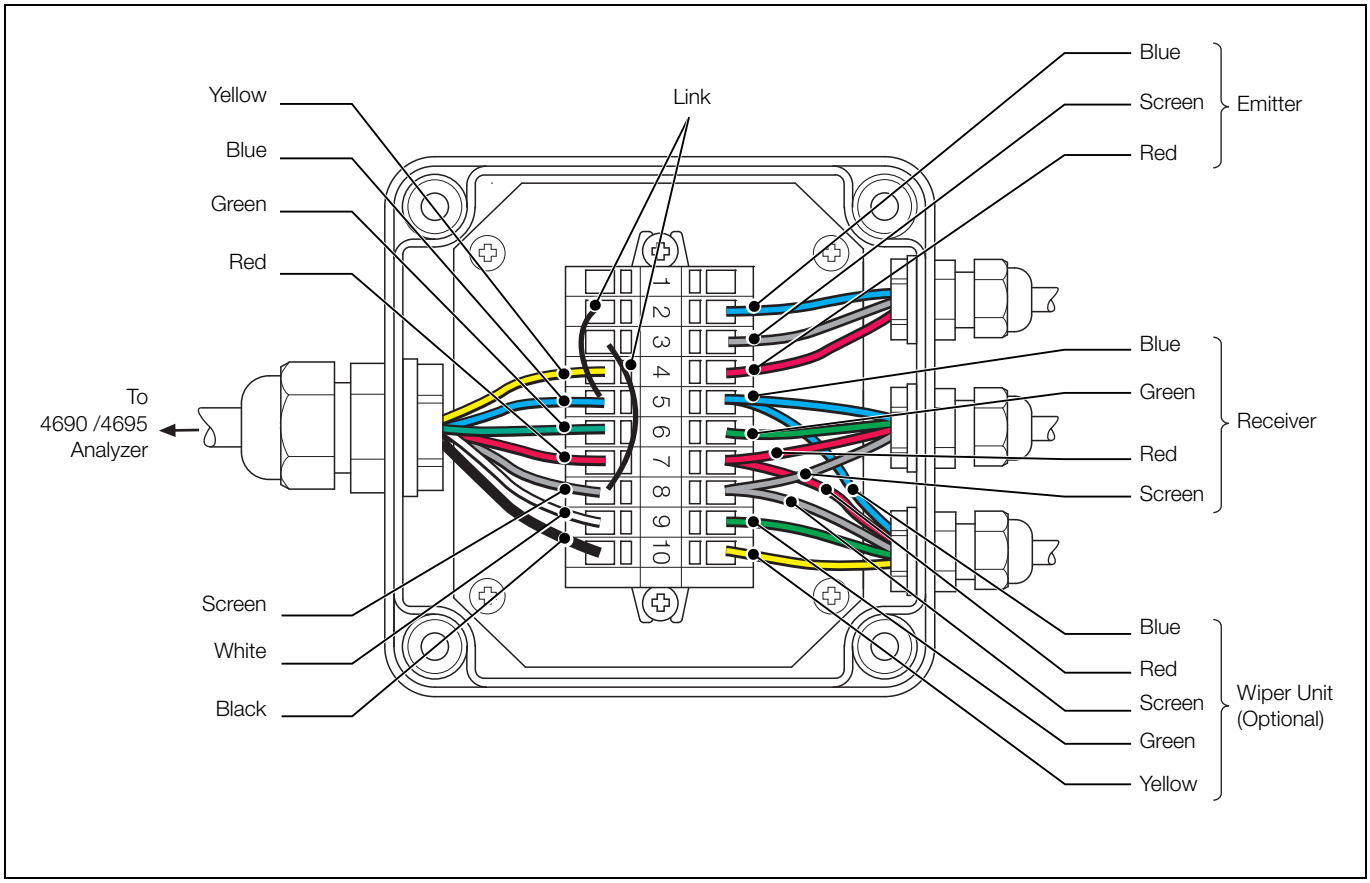

Fig. 4.9 Turbidity Sensor Junction Box Connections

5 Controls and Display

5.1 Display

The display comprises a 5-digit, 7-segment digital upper display line and a 16-character dot-matrix lower display line. The upper display line shows actual values of turbidity, temperature, alarm set points or programmable parameters. The lower display line shows the associated units or programming information.

5.2 Control Familiarization

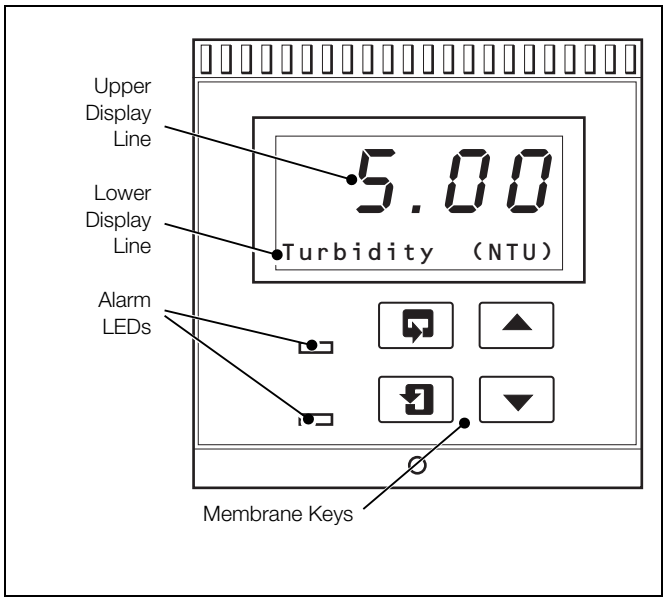

Fig. 5.1 Controls and Display

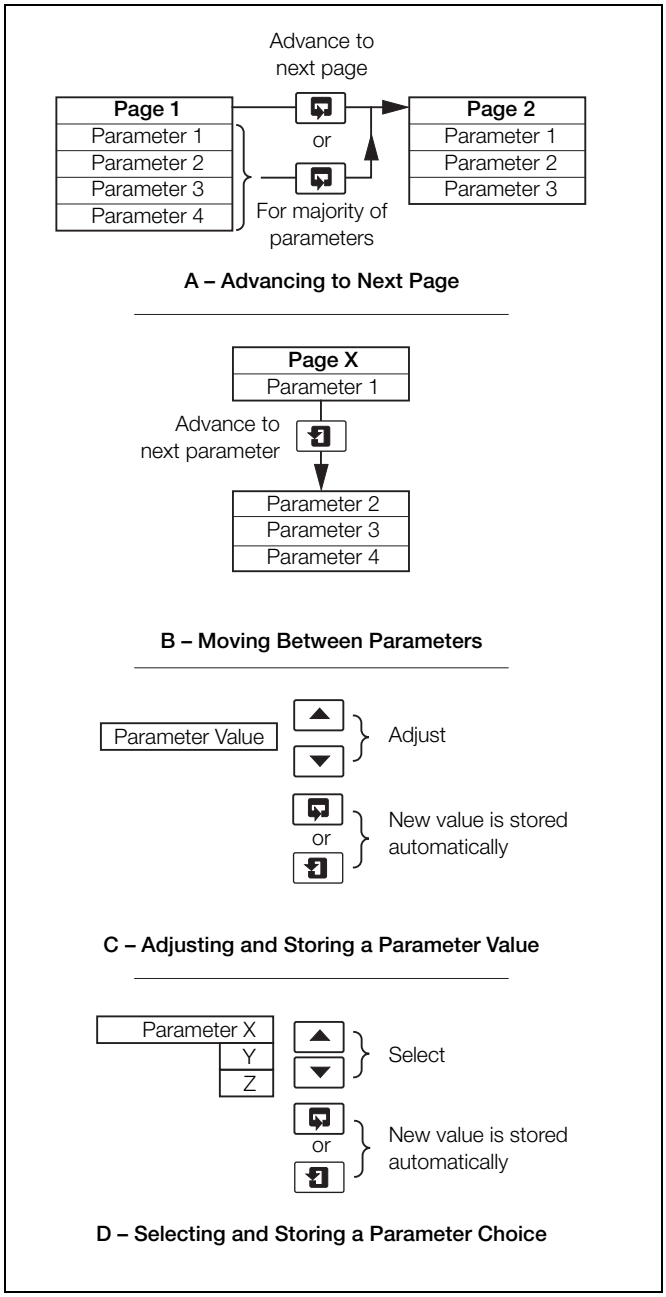

Fig. 5.2 Membrane Key Functions

6 Operation

6.1 Analyzer Start-up

Ensure all electrical connections have been made and switch on the power supply. If the system is being commissioned for the first time, calibration (refer to Section 7, page 20) and parameter programming (refer to Section 8.3, page 27) are required.

6.2 Operation – Turbidity Measurement Mode

Operation in the Turbidity measurement mode comprises an **Operating** page and a **Turbidity Calibration** page. The **Operating** page is a general use page in which parameters are viewed only and cannot be altered. To alter or program a parameter, refer to the programming pages in Section 8. The **Turbidity Calibration** page enables a calibration to be carried out. A 5-digit calibration code is used to prevent unauthorized access to the **Turbidity Calibration** page. The value is preset at 00000 to allow access during commissioning, but should be changed to a unique value, known only to authorized operators, in the **Set Up Outputs** page – see page 30.

6.2.1 Operating Page

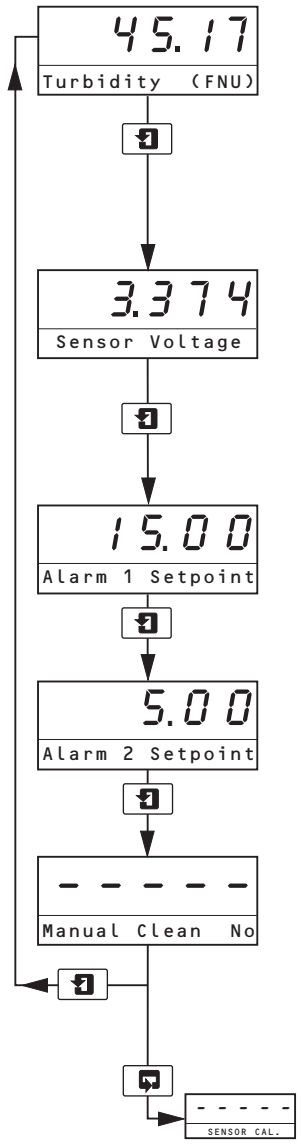

Measured Turbidity (Units)

The measured turbidity value is displayed in the units selected in the **Set Up Parameter** page – see Section 8.3, page 27.

Press ↵ to advance to next page

or

Press ▶ to advance to next parameter.

Sensor Voltage

The sensor voltage displayed is the output from the optical receiver. The optical system (the emitter and the receiver) are configured to produce the 0 to 3 V outputs from zero to full scale, providing an indication of the performance of the optical system.

Alarm 1 Set Point

The set point value and relay / LED action are programmable – refer to Section 8.4, page 29.

Alarm 2 Set Point

The set point value and relay / LED action are programmable – see refer to Section 8.4, page 29.

Manual Clean

Note. Displayed only if the turbidity sensor is fitted with a wiper unit – see Table 2.1, page 3.

Press the ▲ key to initiate a manual clean. `Manual Clean Yes` is displayed for one minute. The automatic clean sequence is then reset and `Manual Clean No` displayed.

Advance to **Calibration** page – see Section 7, page 20.

7 Calibration

A key feature of the 4690 Series Turbidity system is the dry secondary calibration standard. This is designed to simplify routine calibration verification and minimizes the need for chemical standards.

Each dry calibration standard is verified against a primary formazine standard before delivery and the nominal turbidity value is indicated on the label.

For regulatory monitoring, use the secondary calibration standard for monthly calibration verification and monitor it for deterioration periodically using a primary standard.

Definitions

- **Primary Standards**

  Turbidity standards that are traceable and equivalent to the reference turbidity standard, within statistical errors. Formazine is the most commonly acceptable form of primary standard. The other is a commercially manufactured liquid suspension of Styrene divinylbenzene polymer beads (SDB). Primary standards are used to calibrate a turbidity analyzer directly or to calibrate a secondary standard.

- **Secondary Standards**

  Standards that the manufacturer (or an independent testing organization) has certified give analyzer calibration results equivalent (within certain limits) to the results obtained when the analyzer is calibrated with a primary standard.

- **Calibration**

  A procedure that checks or adjusts an analyzer's accuracy by comparison with a defined standard or reference.

- **Calibration Verification**

  A procedure used to check whether or not the calibration of the analyzer is within certain limits.

7.1 Care and Maintenance of Secondary Standards

ABB's secondary standards may be used repeatedly but must be monitored for deterioration.

All secondary standards can change gradually with time. Deterioration can be detected by measuring the turbidity value of the secondary standard after calibration of the analyzer with a primary calibration standard.

It is recommended that secondary standards are rechecked against a primary standard on the analyzer they are intended to be used with every 3 months.

If comparison with a primary standard shows that the turbidity value of the secondary standard has changed the secondary standard can be assigned a new turbidity value for use in future calibration verification.

Included with each sensor is a calibration record card kit for recording the value of the secondary standard compared to the primary calibration data for each individual analyzer with which the secondary standard is used.

Additional calibration record card kits can be purchased from ABB (part no. 7998190 for pack of 3).

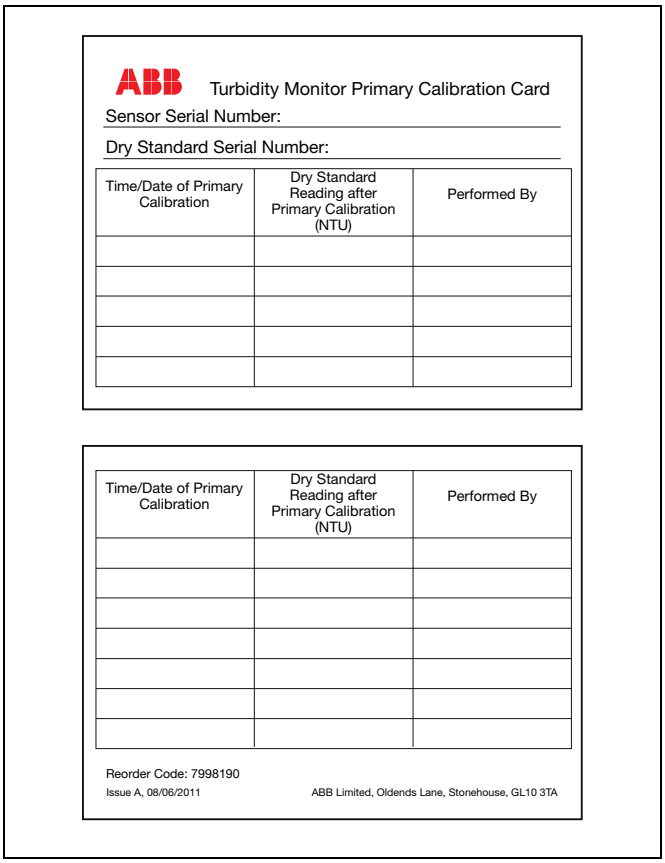
ABB Turbidity Monitor Primary Calibration Card

Sensor Serial Number:

Dry Standard Serial Number:

Time/Date of Primary Calibration	Dry Standard Reading after Primary Calibration (NTU)	Performed By

Time/Date of Primary Calibration	Dry Standard Reading after Primary Calibration (NTU)	Performed By

Reorder Code: 7998190

Issue A, 08/06/2011

ABB Limited, Oldends Lane, Stonehouse, GL10 3TA

Fig. 7.1 Example of Calibration Record Card

To minimize deterioration of the secondary standard:

- Carefully wipe off any residual moisture after use.
- Clean the prism with lint-free cloth.
- Avoid direct contact with the dry standard rod – fingerprints on the surface may alter its stated value.
- Store in the container provided when not in use and keep in a dry place.

7.2 Performing a Calibration Verification with a Secondary Standard

To check the calibration:

1. Close the isolating valve installed upstream of the sensor.
2. Close the sensor inlet valve and open the drain valve. Allow the sensor to drain.
3. Carefully remove the wiper unit (7998 011 and 012) or the wiper plug (7998 016 and 017) to aid complete drainage of the system. When the system is empty, close the drain valve.

   Caution. When removing the wiper unit **do not** put excessive leverage on the wiper as there is a risk of bending the wiper arm out of 90 °. On removal of wiper, check wiper arm has not been bent.

4. Thoroughly dry the flow chamber internally using clean tissue.
5. Thoroughly clean and dry the emitter and receiver lenses using clean tissue.

   Note. If condensation forms on the emitter and receiver lenses, leave the sensor open to enable the lenses to reach ambient temperature before attempting calibration.

6. Insert the dry calibration standard with the zero NTU indication (see Figs 7.2 or 7.3) facing the optical receiver, ensuring the locating lug engages correctly – see Fig. 7.4.

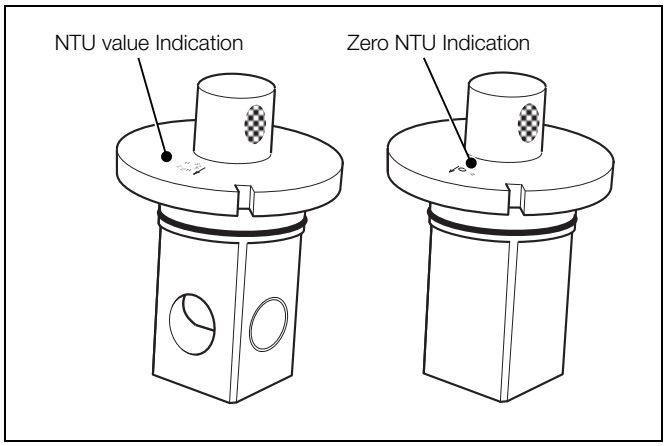

Fig. 7.2 Dry Calibration Standard for Low Range Sensors

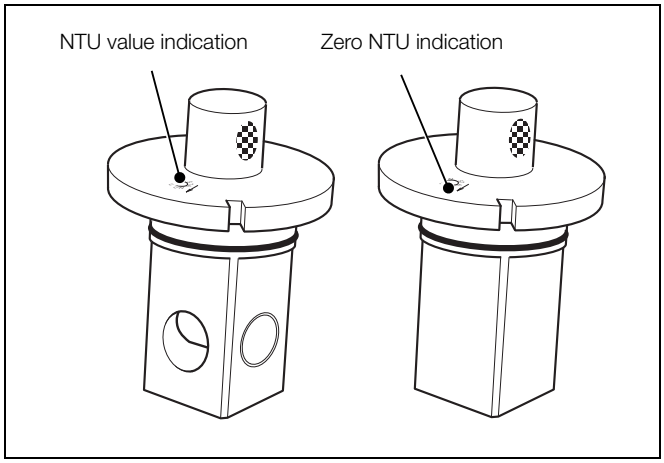

Fig. 7.3 Dry Calibration Standard for High Range Sensors

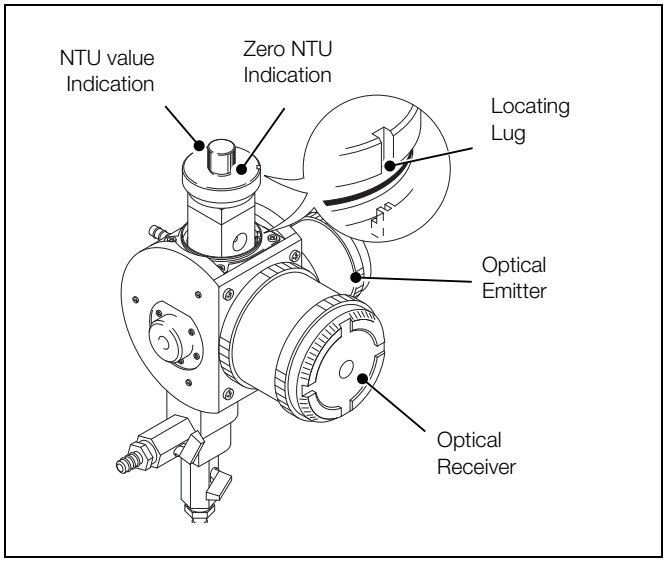

Fig. 7.4 Inserting Dry Standard

7. Note the reading on the display.

8. Remove the dry standard, rotate it through 180° and refit it, ensuring that the NTU value indication (see Figs 7.2 or 7.3) faces the receiver and the locating lug engages correctly – see Fig. 7.4.
9. Note the reading on the display.
10. If the readings noted at steps 7 and 9 exceed ±5 % of dry standard value, repeat the procedure from step 4. If readings are still outside this range, calibrate the sensor.
11. Remove the dry standard and place it in its storage container.
12. Refit the wiper unit (7998 011 and 012) or wiper plug (7998 016 and 017).
13. Open the inlet valve and ensure that the flow through the sensor is 0.5 to 1.5 l min^{-1}

7.3 Performing a Calibration with a Primary Standard

Note. Before performing a wet standard calibration, ensure a stock formazine solution is available. If a stock solution is not available, 24 hours must elapse before a freshly-prepared solution can be used.

To prepare the sensor assembly for wet (Formazine) calibration:

1. Close the isolating valve installed upstream of the sensor.
2. Close the sensor inlet valve and open the drain valve. Allow the sensor to drain.
3. Carefully remove the wiper unit (7998 011 and 012) or the wiper plug (7998 016 and 017) to aid complete drainage of the system. When the system is empty, close the drain valve.

   Caution. When removing the wiper unit **do not** put excessive leverage on the wiper as there is a risk of bending the wiper arm out of 90 °. On removal of wiper, check wiper arm has not been bent.

4. Thoroughly dry the flow chamber internally using clean tissue.
5. Thoroughly clean and dry the emitter and receiver lenses using clean tissue.

   Note. If condensation forms on the emitter and receiver lenses, leave the sensor open to enable the lenses to reach ambient temperature before attempting calibration.

6. Insert the dry calibration standard with the zero NTU indication (see Figs 7.5 or 7.6, page 23) facing the optical receiver, ensuring the locating lug engages correctly – see Fig. 7.7.

   Note. Do not touch the light reflecting parts of the standard.

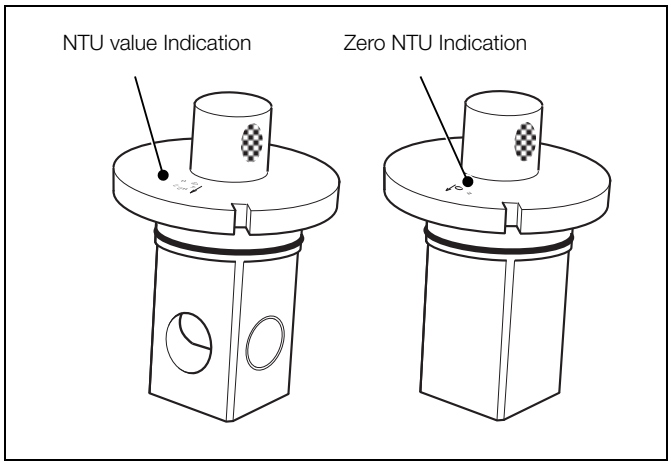

Fig. 7.5 Dry Calibration Standard for Low Range Sensors

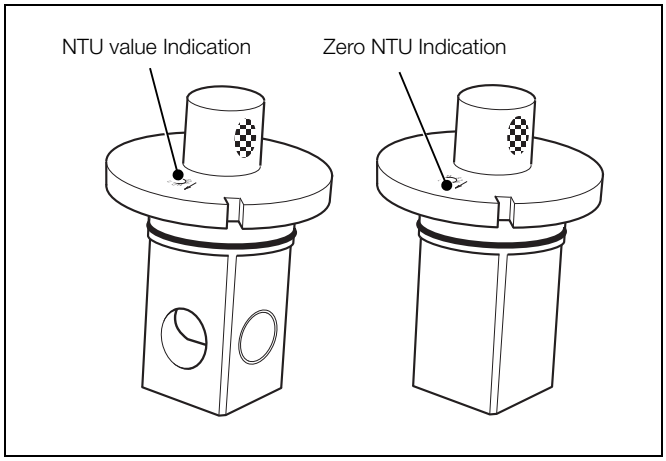

Fig. 7.6 Dry Calibration Standard for High Range Sensors

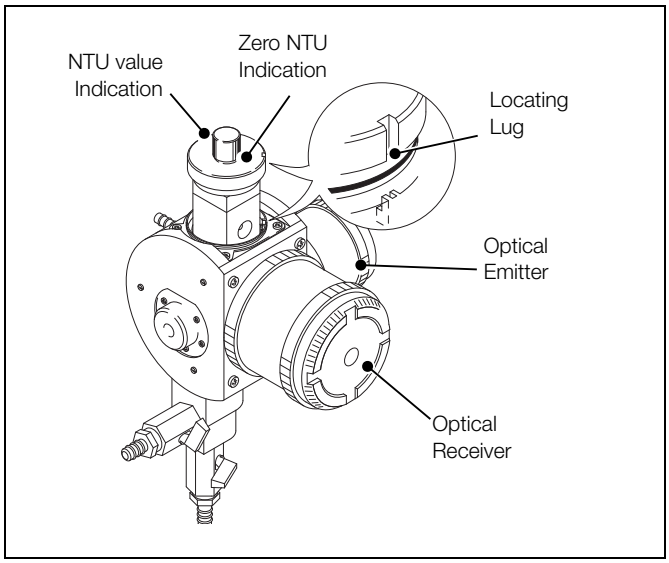

Fig. 7.7 Inserting Dry Standard

7. Calibrate the sensor as follows:

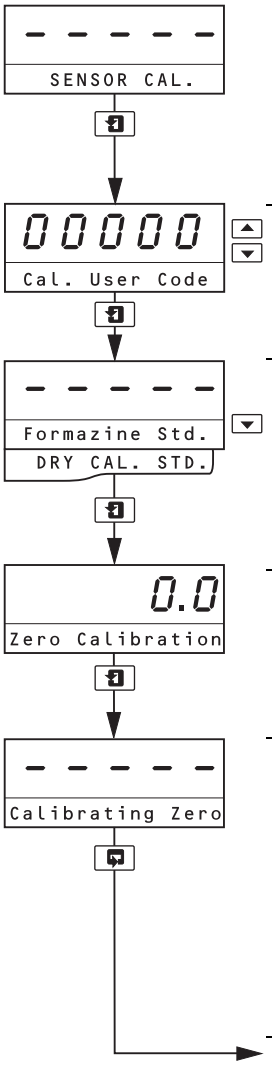

Sensor Calibration

Press ↵ to advance to next page

or

Press ↵ to advance to next parameter.

Calibration Security Code

Enter the required calibration code number, between 00000 and 19999. If an incorrect value is entered, access to calibration is prevented and the `SENSOR CAL.` page is displayed.

Dry Standard Calibration

Press the ▼ key to select `Formazine Std.`

Zero Calibration

Press the ↵ key. The display changes to `Calibrating Zero`.

Calibrating Zero

After approximately one minute, the display changes to `Fill Span Sol.` if zero calibration is successful.

If `Cal Fail` is displayed, remove the dry standard and ensure the emitter and receiver lenses are clean and dry. Refit the dry standard, ensuring it is fitted correctly (see step 6, page 22) and repeat the procedure.

Note. Do not touch the light reflecting parts of the standard.

Continued on next page.

Continued from previous page

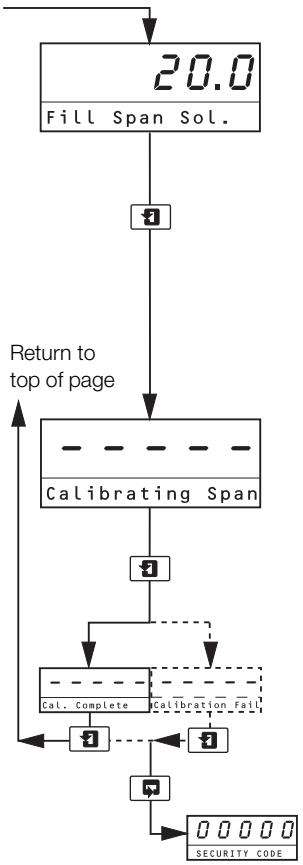

Fill Span Solution

1. Remove the dry standard and place it in its storage container.

   Note. Do not touch the light reflecting parts of the standard.

2. Fill the flow chamber with the formazine span solution and refit the wiper unit or wiper plug.
3. Using the ▲ and ▼ keys, set the display to the NTU value of the formazine span solution.
4. Press the ↵ key. The display changes to `Calibrating Span`.

   Note. If span calibration is not required, press the ↵ key again to advance to `Cal. Complete`.

Calibrating Span

After approximately one minute, the display changes to `Cal. Complete` if calibration is successful.

1. Remove the wiper unit or wiper plug.
2. Drain the flow chamber, ensuring all the formazine span solution is removed.
3. Refit the wiper unit or wiper plug and open the inlet valve.

If `Cal Fail` is displayed, drain the flow chamber, remove the wiper unit or wiper plug and clean the emitter and receiver lenses. Repeat the calibration procedure ensuring that an in-date or fresh formazine solution is used and that the **Fill Span Solution** parameter is set to the NTU value of the formazine span solution.

Advance to **Access to Configuration** pages – see Section 8.1, page 26.

8 Configuration and Electrical Calibration

8.1 Access to Configuration Pages

A 5-digit security code is used to prevent unauthorized access to the configuration pages.

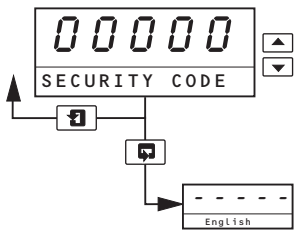

Security Code

Enter the required code number, between 00000 and 19999, to gain access to the configuration pages. If an incorrect value is entered, access to subsequent configuration pages is prevented and the Operating Page is displayed.

Advance to **Language** page – see Section 8.2 below.

8.2 Language Page

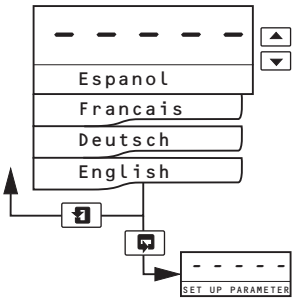

Language

Using the ▲ and ▼ keys, select the required language.

Advance to **Set Up Parameter** page – see Section 8.3, page 27.

8.3 Set Up Parameter Page

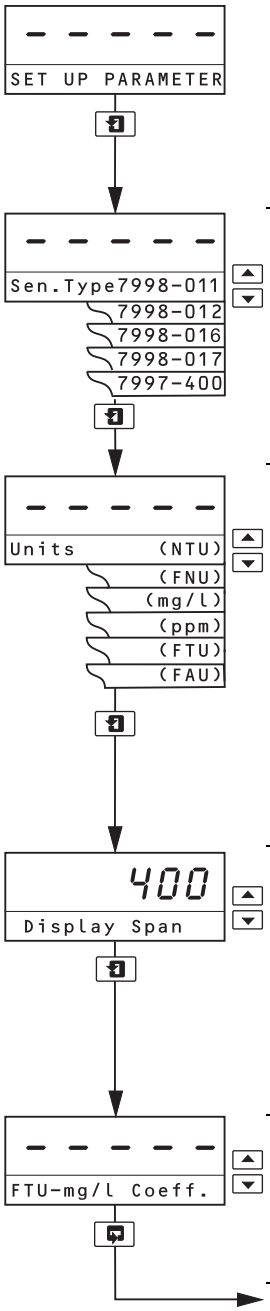

Set Up Parameter

Press ↵ to advance to next page

or

Press ↵ to advance to next parameter.

Sensor Type

Using the ▲ and ▼ keys, select the required sensor:

7998–011
7998–012
7998–016
7998–017

7998–400 (Refer to separate manual IM/4670)

Units

Using the ▲ and ▼ keys, select the required measurement units:

NTU (Nephelometry Units)

FNU (Formazine Nephelometry Units)

mg/l (milligrams suspended solids per litre) – 7998-012/017 sensors only

ppm (parts per million suspended solids) – 7998-012/017 sensors only

Note. FTU and FAU units are applicable only to 7997–400 series sensors – refer to IM/4670

Display Span

Using the ▲ and ▼ keys, select the required span value.

The minimum and maximum values that can be selected are determined by the **Sensor Type** selected above. The display flashes at turbidity values higher than the selected span value but indicates correctly up to the range of the sensor – see Table 2.1 on page 3.

The display span also sets the correct output span. Alarm values cannot be set outside this range.

Correction Factor

Note. Displayed only if **Units** is set to mg/l or ppm

Using the ▲ and ▼ keys, select the required correction factor to between 0.2 and 5.0.

Continued on next page.

Continued from previous page

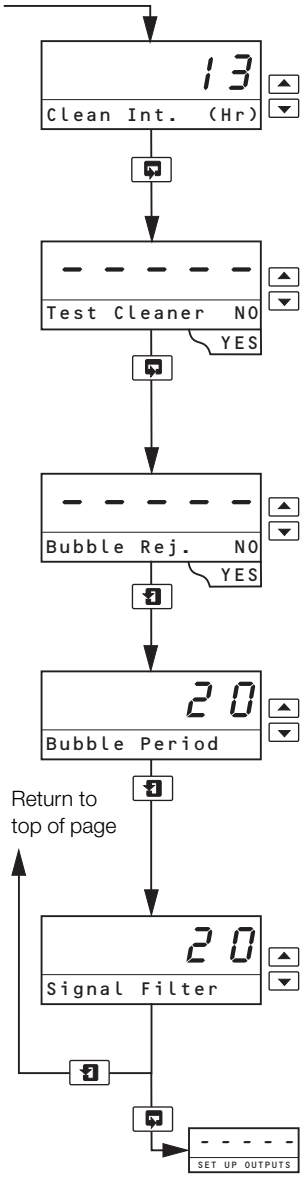

Cleaning Interval

Note. Displayed only if **Sensor Type** is set to 7998-011 or 7998-012.

Using the ▲ and ▼ keys, select the cleaning interval required. Values available are: 15 mins, 30 mins, 45 mins, 1 hr, then 1 hour increments to a maximum of 24 hours.

Test Cleaner

Note. Displayed only if **Sensor Type** is set to 7998-011 or 7998-012.

Select YES to activate the wiper unit diagnostics function and enable visual indication of wiper unit function.

Select No to deactivate the wiper unit diagnostics function.

Bubble Rejection

Use in applications where degassing of the sample takes place.

When set to YES, the analyzer ignores short duration spikes in the turbidity reading caused by the formation of small bubbles in the flowcell due to degassing.

Bubble Period

Note. Displayed only if **Bubble Rej.** is set to YES

Using the ▲ and ▼ keys, adjust the value to between 2 and 60 seconds until short duration spikes are no longer seen on the display.

Note. A value of 20 seconds is normally sufficient for most applications.

Signal Filter

Use in applications where the turbidity readings are noisy.

Using the ▲ and ▼ keys, adjust the value to between 4 and 180 seconds.

Note. If **Bubble Rej.** is set to YES, set a value of 4 seconds for optimum performance.

Advance to **Set Up Outputs** page – see Section 8.4, page 29.

8.4 Set Up Outputs Page

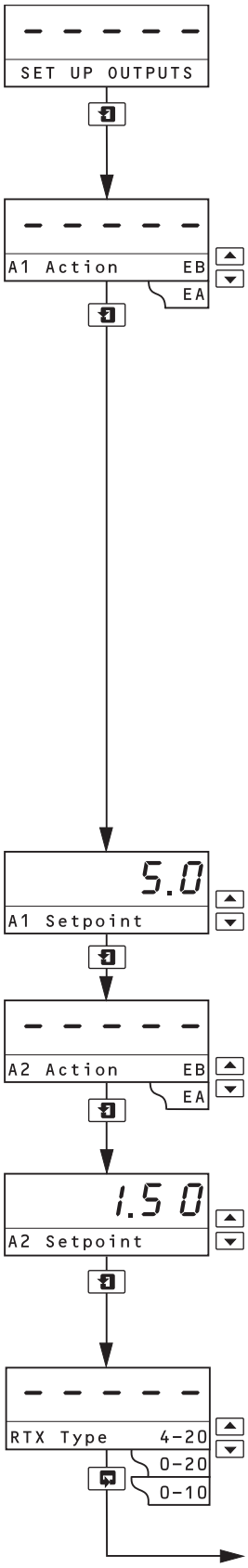

Set Up Outputs

Press ↵ to advance to next page

or

Press ▶ to advance to next parameter.

Alarm 1 Action

For 'Fail-safe' alarm operation the relay's alarm state must be the same as the power-down state, (the relay is de-energized).

For high alarm operation the relay must be Energized Below (EB) the alarm set point.

For low alarm operation the relay must be Energized Above (EA) the alarm set point.

The alarm LEDs are lit in the alarm condition.

Select the required alarm 1 action from the following table:

Alarm Action	LED Condition for Input Above Set Point	LED Condition for Input Below Set Point	Relay Condition for Input Above Set Point	Relay Condition for Input Below Set Point
EB	ON	OFF	De-energized	Energized
EA	OFF	ON	Energized	De-energized

The set point band is defined as the actual value of the set point plus or minus the hysteresis value. The hysteresis value is ±1 % of the set points. Alarm action occurs if the input value is above or below the set point band. If the input moves within the set point band the last alarm action is maintained.

Alarm 1 Set Point

Using the ▲ and ▼ keys, set the alarm 1 set point to any value within the selected display span – see **Display Span** on page 27. The set point value is subject to hysteresis as detailed above.

Alarm 2 Action

Note. Displayed only if **Test Cleaner** is not set to YES – see **Test Cleaner** on page 28 (set automatically to Wiper Unit Failed Alarm if **Test Cleaner** is set to YES).

Repeat as for **Alarm 1 Action** above.

Alarm 2 Set Point

Note. Displayed only if **Test Cleaner** is not set to YES – see **Test Cleaner** on page 28 (set automatically to Wiper Unit Failed Alarm if **Test Cleaner** is set to YES).

Repeat as for **Alarm 1 Set Point** above.

Retransmission Type

Using the ▲ and ▼ keys, select the retransmission current output range required, from 0 to 10, 0 to 20 or 4 to 20 mA.

The current output range is assigned to the selected display span – see **Display Span** on page 27.

Continued on next page.

Continued from previous page

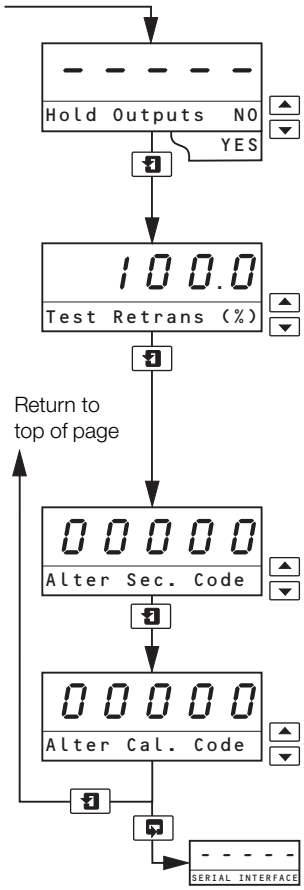

Hold Outputs during Calibration

Select YES to hold the retransmission and alarm outputs to prevent inadvertent operation during calibration.

Test Retransmission Output

The analyzer transmits automatically a test signal of 0, 25, 50, 75 or 100 % of the retransmission range selected on page 29. The % test signal selected is shown on the upper display.

Example – for a selected range of 0 to 20 mA and 50 % retransmission test signal, 10 mA is transmitted.

Select the required retransmission test signal.

Alter Configuration Security Code

Set the security code to a value between 00000 and 19999.

Alter Calibration Security Code

Set the security code to a value between 00000 and 19999.

Advance to **Set Up Serial Interface** page.

8.5 Set Up Serial Interface Page

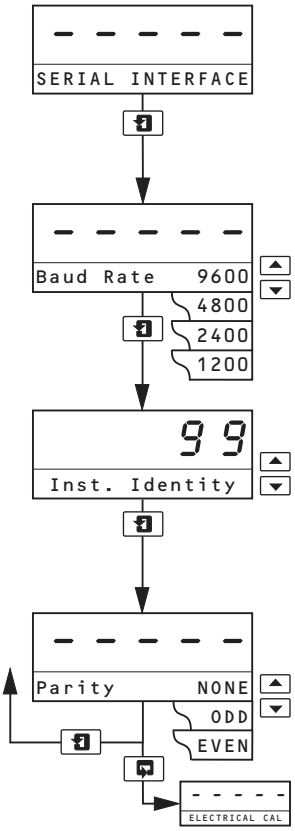

Serial Interface

Press ↵ to advance to next page

or

Press ↵ to advance to next parameter.

Baud Rate

Using the ▲ and ▼ keys, select the baud rate required from 1200, 2400, 4800 or 9600 baud.

Instrument Identity

Using the ▲ and ▼ keys, select a value between 1 and 99 to identify the analyzer on the network.

Parity

Using the ▲ and ▼ keys, select the parity required, None, Odd or Even.

Advance to **Electrical Calibration** page – see Section 8.6.3, page 33.

8.6 Electrical Calibration

Caution. The analyzer is calibrated by the Company prior to despatch and an electrical calibration should not be necessary. If an electrical calibration is carried out, suitably calibrated and verifiable test equipment must be used.

8.6.1 Equipment Required

1. Millivolt source: 0 to 4000 mV.
2. Digital milliammeter (current output measurement): 0 to 20 mA.

8.6.2 Preparation

1. Isolate the analyzer and turbidity sensor from the power supply and disconnect the sensor and current output from the analyzer's terminal block – see Fig. 4.4, page 14 (wall-/pipe-mount analyzer) or Fig. 4.5, page 15 (panel-mount analyzer).
2. **Wall- / Pipe-mount Analyzer**
   a. Connect the millivolt source '+' and '–' to terminals 4 and 7 respectively.
   b. Connect the milliammeter to the retransmission output terminals.
   c. Ensure the earth on the millivolt source is connected to the earth stud.

   Panel-mount Analyzer
   a. Connect the millivolt source '+' and '-' to terminals 9 and 6 respectively.
   b. Connect the milliammeter to the retransmission output terminals.
   c. Ensure the earth on the millivolt source is connected to the earth stud.
3. Switch on the supply and allow ten minutes for the circuits to stabilize.
4. Select **ELECTRICAL CAL** page and proceed as in Section 8.6.3, following.

8.6.3 Electrical Calibration Page

In this section the actual values denoted by '**xxxxx**' are unimportant and are used only to determine display reading stability when carrying out the electrical calibration procedure.

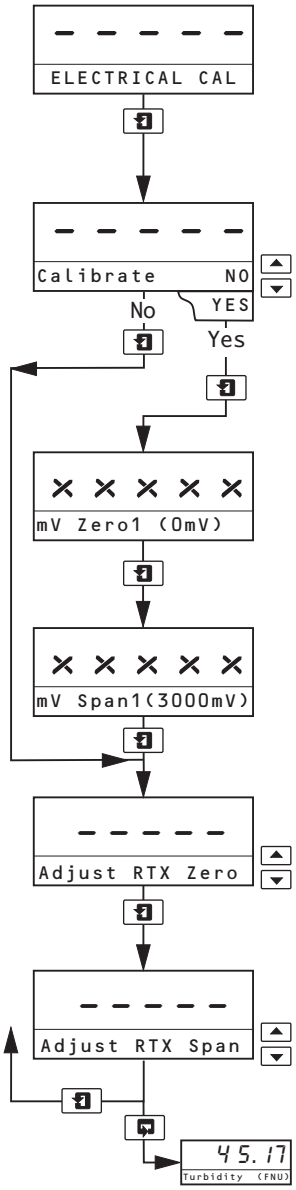

Electrical Calibration

Press ↵ to advance to next page

or

Press ↵ to return to the **Operating** page – see Section 6.2.1, page 19.

Calibrate

Select **YES** to access the electrical calibration sequence.

Select **NO** to advance to **Adjust RTX Zero**.

mV Zero1 (0mV)

Set the millivolt source to 0 mV and allow the analyzer display to stabilize.

mV Span1 (3000mV)

Set the millivolt source to 3000 mV and allow the analyzer display to stabilize.

Adjust Retransmission Zero

Set the milliammeter reading to 4 mA.

Adjust Retransmission Span

Set the milliammeter reading to 20 mA.

Note. The retransmission range selected in the **Set Up Outputs** page does not affect the reading.

Return to the **Operating** page – see Section 6.2.1, page 19.

9 Maintenance

The servicing schedule in Table 9.1 is a guide only. Because the turbidity systems are designed for a wide range of applications, where the nature of the sample can vary considerably, it may be necessary to amend the schedule to suit the particular installation and sample conditions.

Task	Recommended Frequency
Wiper blade replacement	Quarterly
LED light source (ISO 7027) replacement kit	Every 5 years

Table 9.1 Suggested Maintenance Schedule

9.1 Sensor Cleaning

9.1.1 Sensors Without Wiper Unit

These sensors are normally used on clean water samples and, under normal conditions, may require only manual monthly cleaning of the flow chamber. However, if a high turbidity breakthrough occurs, clean the flow chamber immediately to ensure accurate readings.

9.1.2 Sensors With Wiper Unit

The required automatic cleaning frequency of the flow chamber and optical windows of the sensors can be determined only by plant experience. It is recommended that checks are made at appropriate intervals.

10 Fault Finding

10.1 Error Messages

If erroneous or unexpected results are obtained, the fault may be indicated by an error message – see Table 10.1. The majority of problems are overcome by thorough cleaning of the flowcell optical windows and / or a sensor calibration.

Error Message	Description and Remedy
`Cal Fail`	Indicates that the expected step change between a zero and span calibration was not produced by the sensor (zero response from the sensor). 1. Repeat calibration. 2. If using a dry calibration standard, ensure that the optical windows on the dry standard are clean and dry. 3. If using solutions: Check that the flowcell has been thoroughly cleaned and rinse well between solutions Check both zero and formazine solutions 4. Check electrical connections to sensor. 5. Using a suitable voltmeter, check the sensor 12 V supplies, both at the analyzer terminals and sensor junction box – see Table 4.1 on page 14 for details. 6. Check the analyzer's response to an electrical input by injecting 0 and 3 V into the following terminals and noting the reading displayed in **Sensor Voltage** in the **Operating** page (see Section 6.2.1, page 19): Wall- / pipe-mount–ve to terminal 7 +ve to terminal 4 Panel-mount –ve to terminal 6 +ve to terminal 9 Small errors in displayed voltage can be removed by electrical calibration. Large errors indicate an electronic fault.
`Cleaner Fail`	Indicates that the analyzer was unable to detect the correct operation of the wiper unit; either the wiper unit did not rotate or failed to park in the correct position. 1. Check the electrical connections to the sensor. 2. Using a suitable voltmeter, check the sensor 12 V supplies, both at the analyzer terminals and sensor junction box – see Figs 4.4, 4.5 and 4.9 on pages 14, 15 and 17 for connection details. 3. Check operation of the wiper unit by disconnecting the white lead from the analyzer terminal block (Cleaner Initiate signal) and touching it briefly to the 0 V terminal – see Table 4.1 on page 14 for details. This initiates a cleaning cycle, that can be observed when the wiper unit is removed from the flowcell.
`NV Memory Error`	Indicates that the contents of the nonvolatile memory has not been read correctly during power up. To rectify the problem, switch off the power, wait 10 seconds and switch on again. If the problem persists contact the Company.

Table 10.1 Error Messages

10.2 Unstable or Erratic Readings

There are a number of possible causes of unstable or erratic readings. Check for air bubbles in the sample. This may be due to degassing of the sample, caused by either a drop in sample pressure or a rise in temperature. Frequent cleaning of the optical windows helps to prevent the build-up of bubbles. If bubbles are observed it is recommended that the optional de-bubbler unit is installed – see Section 3.4, page 10.

Where the noise level gradually gets worse over a period of time, this usually indicates that solids are building up in the flowcell. Increasing the flowrate through the flowcell may reduce this build up. Ultimately the flowcell needs to be cleaned manually.

10.3 Intermittent Short Term Spikes in Turbidity Readings

This is usually caused by bubbles passing through the light path within the flowcell. The bubbles are a result of degassing. Degassing is not an instantaneous process and it is possible that it is taking place after the sample has gone through the de-bubbler. The bubbles start to form in the sample pipework and the flowcell. As they grow gradually, the bubbles finally release and flow through the light path, causing a spike in the turbidity reading.

The analyzer can be programmed for Bubble Rejection to remove short-term spikes from the readings – see page 28. For optimum operation, operate the wiper unit frequently to prevent bubbles building up on the windows.

11 Specification

Sensor

Range

Low range 0 to 40 NTU
High range 0 to 400 NTU

Measurement principle

90 ° scattered light measurement.
Compliant to ISO 7027

Maximum linearity

Typically <1.0 %

Accuracy[1, 2]

Low range version ±2 % of reading

High range version ±5 % of reading or 0.3 NTU

Repeatability[3]

0 to 200 NTU <1 %

200 to 400 NTU 2 %

Limit of Detection[4]

Low range version: 0.003 NTU

High range version: 0.3 NTU

Response time

T90 < 1 min at 1 l/min^{-1}

Flow rate

0.5 to 1.5 l/min (0.13 to 0.39 gall [US]/min)

Integral wiper cleaning system

Programmable operational frequency every 0.25 hour, 0.5 hour, 0.75 hour or multiples of 1 hour up to 24 hours

Sample operating temperature

0 to 50 °C (32 to 122 °F)

Sample pressure

Up to 3 bar (43.5 psi)

Ambient operating temperature

0 to 50 °C (32 to 122 °F)

Ambient operating humidity

Up to 95 % RH

[1]Maximum measured error across full measurement range (limited by uncertainty in Formazine standards).

[2]Tested in accordance with IEC 61298 Parts 1-4: Edition 2.0 2008-10.

[3]Tested in accordance with MCERTS: Performance Standards and Test Procedures for Continuous Water Monitoring Equipment. Version 3.1: Environment Agency 2010.

[4]Tested in accordance with BS ISO 15839: 2003.

Wetted parts – materials used

Cell body unit

- Black POM (Polyoxymethylene) Copolymer
- Spectrosil 2000 fused silica
- Nitrile (O-ring)
- Epoxy preform (cured) – Uni-forms 5034-00
- Polyamide 6
- Nickel plated brass
- PTFE

Wiper unit

- Black Polycarbonate, 10% Glass Fibre filled – Lexan 500R
- Stainless Steel (SS 316 S13/S11) w/ Chemical Black – MIL-C13924 class 4
- Silicone grease (WRC Approved) – Unisilkon L 250 L
- 2-part Epoxy Adhesive (cured) – Robnor PX800F/NC
- EPDM (ethylene propylene diene Monomer) black

Analyzer

Measured value
5-digit x 7-segment backlit LCD

Information
16-character, single line, dot matrix, backlit LCD

Units of measurement
All models: NTU and FNU
mg/l and ppm for models high range models

Accuracy
±0.2 % of reading, ±1 digit

Linearity
±0.1 % FSD

Auto-clean timing (7998011, 7998012)
Programmable 15 min, 30 min, 45 min or 1 hour up to 24 hours in 1 hour increments

Environmental Data

Operating temperature limits
–20...55 °C (–4...131 °F)

Storage temperature limits
–25...55 °C (–13...131 °F)

Operating humidity limits
Up to 95 % RH non-condensing

Power Supply

Voltage requirements
100 to 130 V, 200 to 260 V, 50 / 60 Hz*

Power consumption
< 12 VA

Error due to power supply variation
Less than 0.1 % for +6 % –20 % variation from nominal supply

Insulation
Mains to earth (line to ground) 2 kV RMS

*See *Selecting the Mains Voltage*, Section 4.4, page 16

Relay Outputs and Set Points

No. of relays
2

Relay contacts
Single pole changeover
Rating 250 V AC 250 V DC max.
3 A AC, 3 A DC max.
Loading (non-inductive) 750 VA 30 W max.
(inductive) 750 VA 3 W max.

Insulation
2 kV RMS contacts to earth (ground)

No. of set points
2

Set point adjustment
Programmable

Set point hysteresis
±1 % fixed

Local set point annunciation
Red LED

Retransmission

No. of retransmission signals
One fully isolated programmable 0 to 10 mA, 0 to 20 mA or 4 to 20 mA Optional second current output

Accuracy
±0.25 % FSD ±0.5 % reading

Resolution
0.1 % at 10 mA, 0.05 % at 20 mA

Max. load resistance
750 Ω (20 A max.)

Mechanical Data

Model 4690/500

Wall-mounting	
Protection	IPx6/NEMA4X
Dimensions	160 mm (6.30 in.) wide x 214 mm (8.43 in.) high x 68 mm (2.68 in.) deep
Weight	2 kg (4½ lb)

Model 4695/500

Panel-mounting	(¼ DIN)
Protection	IP66/NEMA4X front
Dimensions	96 mm (3.78 in.) wide x 96 mm (3.78 in.) high x 191 mm (7.52 in.) deep
Weight	1.5 kg (3¼ lb)
Panel cut-out:	$92^{+0.8}_{-0}$ mm x $92^{+0.8}_{-0}$ mm ($3.62^{+0.03}_{-0}$ in. x $3.62^{+0.03}_{-0}$ in.)

Approvals, Certification and Safety

CE Mark
Covers EMC & LV Directives (including latest version EN 61010)

General safety
EN61010-1
Pollution Degree 2
Insulation Category II

EMC

Emissions and Immunity
Meets requirements of IEC 61326 for an industrial environment and domestic emissions

DS/4690–EN Rev. C

12 Spares and Consumables

12.1 Maintenance Kits

Part Number	Description	Kit Contents
7998023	Wiper blade pack	4 x 7997203
7998044	Replacement LED kit (ISO infrared LED version)	1 x 7998126, 1 x 7998021

12.2 Accessories

Part Number	Description	Kit Contents
7998047	Dry standard LOW for use with ISO infrared LED version	7998181 dry standard + calibration certificate
7998048	Dry standard HIGH for use with ISO infrared LED version	7998183 dry standard + calibration certificate

12.3 Upgrade Kits

Part Number	Description	Kit Contents
7998022	Wiper unit upgrade kit	1 each of: 7998140 0216580 – cable gland and locknut 7998023 – wiper blade pack 7998317 – wiper cap

12.4 Strategic Spares

Part Number	Description	Kit Contents
7998024	Feed/drain kit	1 x 7998149, 2 x 0216509, 2 x 0216510
7998026	Emitter unit (ISO infrared LED version)	1 x 7998101
7998029	Receiver unit (infrared LED 0 to 40 NTU)	1 x 7998107
7998030	Receiver unit (infrared LED 0 to 400 NTU)	1 x 7998108
7998037	Replacement ball valves	2 x 0216509
7998038	Replacement hose connectors	2 x 0216510
7998039	Replacement wiper O-ring	2 x 0211346
7998031	O-ring spares kit	1 each of: 0211051, 0211317, 0211346 2 each of: 0211223, 0211314,
7998021	Replacement endcaps	2 x 7998130
7998020	Wiper plug assembly	1 x 7998148
7998190	Cal record card kit	3 x 7998385 – cal record card kit 1 x 0219319 – Vispass bespoke 1 x STT3367 – 250 mm (10 in.) cable tie
7998049	Wiper unit replacement	1 x 7998140 – wiper unit 1 x 7998023 – wiper blade pack

12.5 Software

Part Number	Description	Kit Contents
7998040	7998 Turbidity EPROM (basic)	1 x 46803000 BASIC
7998041	7998 Turbidity EPROM (second retransmission)	1 x 46803001 2ND RETRANS
7998042	7998 Turbidity EPROM (Modbus)	1 x 46803002 MODBUS
7998043	7998 Turbidity EPROM (PROFIBUS)	1 x 46803003 PROFIBUS

12.6 De-bubbler

Item	Description	Part Number
1	O-ring large (3 off)	0211 322
2	O-ring small (2 off)	0211 138
3	Quick-fit connector (2 off)	7997 511

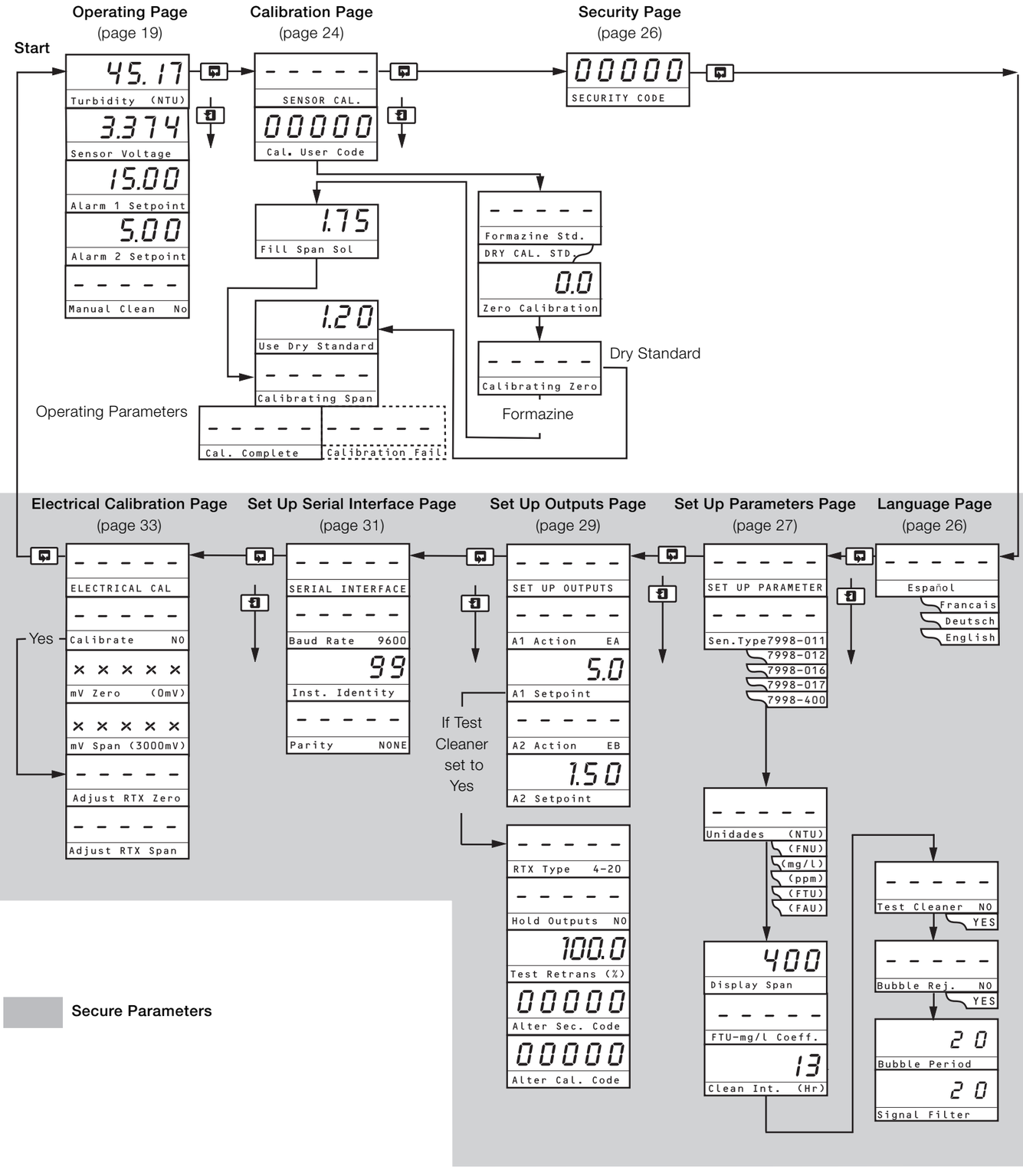
Start
Operating Page
(page 19)
45.17
Turbidity (NTU)
3.374
Sensor Voltage
15.00
Alarm 1 Setpoint
5.00
Alarm 2 Setpoint
- - - - -
Manual Clean No
Calibration Page
(page 24)
- - - - -
SENSOR CAL.
00000
Cal. User Code
Security Page
(page 26)
00000
SECURITY CODE
1.75
Fill Span Sol
1.20
Use Dry Standard
- - - - -
Calibrating Span
- - - - -
Formazine Std.
DRY CAL. STD
0.0
Zero Calibration
- - - - -
Calibrating Zero
Dry Standard
Formazine
Operating Parameters
- - - - -
Cal. Complete
- - - - -
Calibration Fail
Electrical Calibration Page
(page 33)
Set Up Serial Interface Page
(page 31)
Set Up Outputs Page
(page 29)
Set Up Parameters Page
(page 27)
Language Page
(page 26)
ELECTRICAL CAL
Calibrate NO
Yes
mV Zero (0mV)
mV Span (3000mV)
Adjust RTX Zero
Adjust RTX Span
SERIAL INTERFACE
Baud Rate 9600
99
Inst. Identity
Parity NONE
SET UP OUTPUTS
A1 Action EA
5.0
A1 Setpoint
A2 Action EB
1.50
A2 Setpoint
If Test Cleaner set to Yes
RTX Type 4-20
Hold Outputs NO
100.0
Test Retrans (%)
00000
Alter Sec. Code
00000
Alter Cal. Code
SET UP PARAMETER
Sen.Type 7998-011
7998-012
7998-016
7998-017
7998-400
Unidades (NTU)
(FNU)
(mg/l)
(ppm)
(FTU)
(FAU)
400
Display Span
FTU-mg/l Coeff.
13
Clean Int. (Hr)
Español
Francais
Deutsch
English
Test Cleaner NO
YES
Bubble Rej. NO
YES
20
Bubble Period
20
Signal Filter
Secure Parameters

Products and customer support

Automation Systems
For the following industries:
- Chemical & Pharmaceutical
- Food & Beverage
- Manufacturing
- Metals and Minerals
- Oil, Gas & Petrochemical
- Pulp and Paper

Drives and Motors
- AC and DC Drives, AC and DC Machines, AC Motors to 1kV
- Drive Systems
- Force Measurement
- Servo Drives

Controllers & Recorders
- Single and Multi-loop Controllers
- Circular Chart and Strip Chart Recorders
- Paperless Recorders
- Process Indicators

Flexible Automation
- Industrial Robots and Robot Systems

Flow Measurement
- Electromagnetic Flowmeters
- Mass Flowmeters
- Turbine Flowmeters
- Wedge Flow Elements

Marine Systems & Turbochargers
- Electrical Systems
- Marine Equipment
- Offshore Retrofit and Refurbishment

Process Analytics
- Process Gas Analysis
- Systems Integration

Transmitters
- Pressure
- Temperature
- Level
- Interface Modules

Valves, Actuators and Positioners
- Control Valves
- Actuators
- Positioners

Water, Gas & Industrial Analytics Instrumentation
- pH, Conductivity and Dissolved Oxygen Transmitters and Sensors
- Ammonia, Nitrate, Phosphate, Silica, Sodium, Chloride, Fluoride, Dissolved Oxygen and Hydrazine Analyzers
- Zirconia Oxygen Analyzers, Katharometers, Hydrogen Purity and Purge-gas Monitors, Thermal Conductivity

Customer support
We provide a comprehensive after sales service via a Worldwide Service Organization. Contact one of the following offices for details on your nearest Service and Repair Centre.

UK
ABB Limited
Tel: +44 (0)1453 826661
Fax: +44 (0)1453 829671

USA
ABB Inc.
Tel: +1 215 674 6000
Fax: +1 215 674 7183

Client Warranty
Prior to installation, the equipment referred to in this manual must be stored in a clean, dry environment, in accordance with the Company's published specification. Periodic checks must be made on the equipment's condition. In the event of a failure under warranty, the following documentation must be provided as substantiation:
- A listing evidencing process operation and alarm logs at time of failure.
- Copies of all storage, installation, operating and maintenance records relating to the alleged faulty unit.

ABB Limited
Measurement & Analytics
Oldends Lane, Stonehouse
Gloucestershire, GL10 3TA
UK
Tel: +44 (0)1453 826661
Fax: +44 (0)1453 829671
Mail: instrumentation@gb.abb.com

ABB Inc.
Measurement & Analytics
125 E. County Line Road
Warminster, PA 18974
USA
Tel: +1 215 674 6000
Fax: +1 215 674 7183

abb.com/measurement

We reserve the right to make technical changes or modify the contents of this document without prior notice. With regard to purchase orders, the agreed particulars shall prevail. ABB does not accept any responsibility whatsoever for potential errors or possible lack of information in this document.
We reserve all rights in this document and in the subject matter and illustrations contained therein. Any reproduction, disclosure to third parties or utilization of its contents – in whole or in parts – is forbidden without prior written consent of ABB.
© ABB 2018

IM/4690-EN REV. F 06.2018

ADVANTAGE – TANKLESS HEATERS

Please read and follow the installation and operation instructions carefully, to ensure the long life and reliable operation of this appliance.

CONTENTS

Important Safety Instructions ---------- page 2

Electrical Diagram---------- page 3

Technical Data and Product Structure----------page 4

Installation Guideline----------page 5

Operation Instructions ----------page 9

Trouble-Shooting----------page 9

Normal Maintenance----------page 10

CANADA

UV Corp
Markham, Ontario
1-866-833-2247

USA

NPV group LLC
Akron, Ohio
1-800-561-6838

■Important Safety Instructions

1. **The installation must be in compliance with the National Electrical Code, and your local electrical and plumbing codes.**
2. **This appliance must be GROUNDED /EARTHED.** (If the model is equipped with plug, it is a electric leakage protection plug).
3. Install or locate this water heater only in accordance with the provided installation instructions.
4. Use this water heater only for its intended use as described in this manual.
5. For models that come without a plug, please contact a qualified electrician to have unit properly installed.
6. This appliance is not intended for use by persons (including children) with reduced physical sensory or mental capabilities, or lack of experience and knowledge, unless they have been given supervision or instruction concerning use of the appliance by a person responsible for their safety. Children should be supervised to ensure that they do not play with the appliance.
5. This appliance **MUST** be permanently connected to the fixed circuit breaker and it must be installed vertically (excluding the models which are equipped with plug). **DO NOT** install this appliance near to flammable materials or a strong magnetic field.
6. This appliance is **forbidden** to be switch on if you think it may be frozen, as this could result in serious damage to the unit. Wait until you are sure that it has completely thawed out before you switch it on.
7. Please feel the outlet hot water temperature with hand to make sure it is suitable for use before taking a shower to avoid getting scalded.
8. Before connecting pipes to the water heater hoses, it is extremely important to FLUSH the pipes to wash away all plumbing paste or residue in the pipes.
9. If there is damage to the wire, you must contact a qualified electrician to replace it with dedicated wire from authorized dealers or electrical supply store.
10. Check valve is required to be installed at the water inlet.
11. The water relief valve should be used periodically in order to remove calcium carbonate deposits.
12. The drain-pipe which is connected to the water relief valve should be installed continuous downward position and in a frost free environment.
13. The spray head must be descaled regularly.

WARNING: Do not switch on if there is a possibility that the water in the heater is frozen.

■Product Features

This Mini tankless electric water heater differs from a conventional storage type mini water heaters. It doesn't store hot water. Instead, water is heated instantaneously as it flows through the unit. The powerful heating elements are activated by a flow switch as water is drawn from a hot water faucet connected to the appliance. The advantage mini tankless water heater has greater energy efficiency than storage type water heaters as it only heats the water when you demand it. The units are incorporated with multi-safety devices and will continuously supply hot water as long as the faucet is open.

The Advantage mini tankless water heater has the following features.

1. Tankless, instantaneous heating for on demand hot water, No pre-heating. No stand-by heating loss. energy-saving.
2. High strength ABS splash proof casing, stainless steel heating element.
3. Compact appearance and unlimited supply of hot water.
4. Easy installation, heater can be installed above or under sink.
5. Easy operation, the heater provides hot water with constant temperature.
6. Micro-computer control, using patented heating technology. Water is completely separated from electricity by multi-layers of composite nano insulation material.
7. Over temperature protection: when the outlet water temp. reaches or over 60°C, the appliance will shut down, it will re-start automatically while temp. drops to operating temperature range.
8. There is a built-in pressure relief valve at the water outlet to prevent explosion.

■Electrical Diagram

ADV-KH series

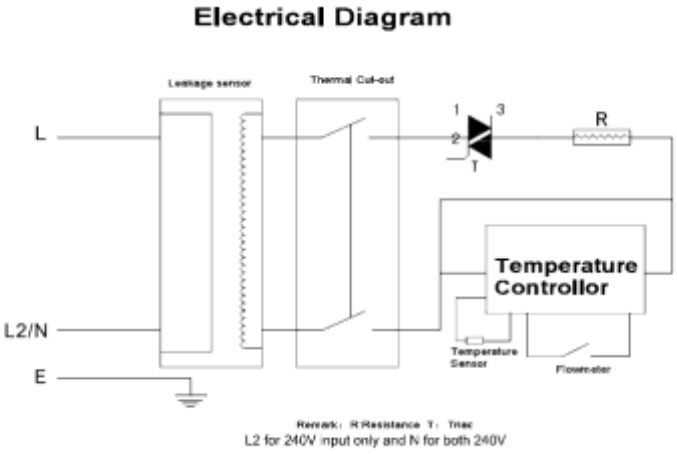

■Technical Data

Model	ADV135KH	ADV65KH
Voltage	120V	240V
Wattage W	3500	6000
Rated Current A	29.2	25
Specification of Plug AWG	10	12
Min. required circuit breaker A	40	30
Min. water flow to activate unit L/min/GPM	1.8/0.48	
Weight kg	1.5	
Product Dimensions mm	198x160x98	
Water connections	1/2”	

Note: suitable recognized strain relief must be used when the product is installed.

■Product Inner Structure

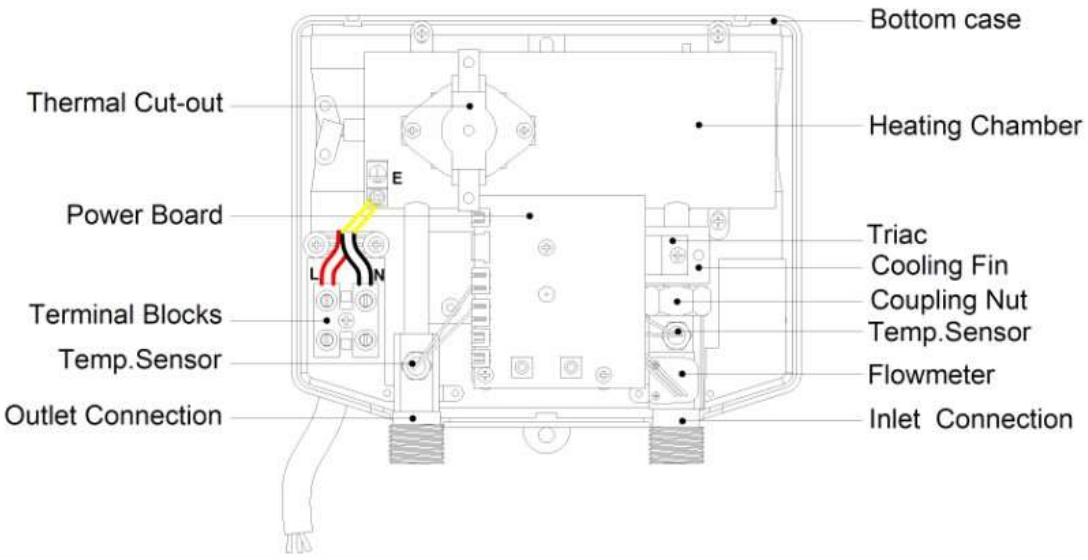

■Installation Guideline

The installation must be in compliance with the National Electrical Code, your local electrical and plumbing codes.

1. Make sure the appliance is intact, and the fittings are complete.
2. Please make sure the main power supply, water pressure, grounding condition, amperage and wire meet the required codes before installation of appliance.
3. The appliance must be connected to properly grounded dedicated branch circuits of proper voltage rating. Ground must be brought to the “ground” at the circuit breaker panel.
4. This appliance **MUST** be permanently connected to the fixed circuit breaker. If you don’t use the heater, please switch off the circuit breaker.
5. **DO NOT** install this appliance near to flammable materials or a strong magnetic field. The appliance can be installed above or under the sink, and unit must only be mounted in a VERTICAL position near by the water fittings. Please allow water to flow through the unit before turning power on.

■ Installation Method

●General

The Advantage Mini tankless electric water heater can be used for hand washing, in washrooms or in the kitchen it can be installed above or under the sink.

●Mounting the unit

Locate an appropriate place on a section of wall as above mentioned.

Fig 1 ——→ Front and back of the appliance

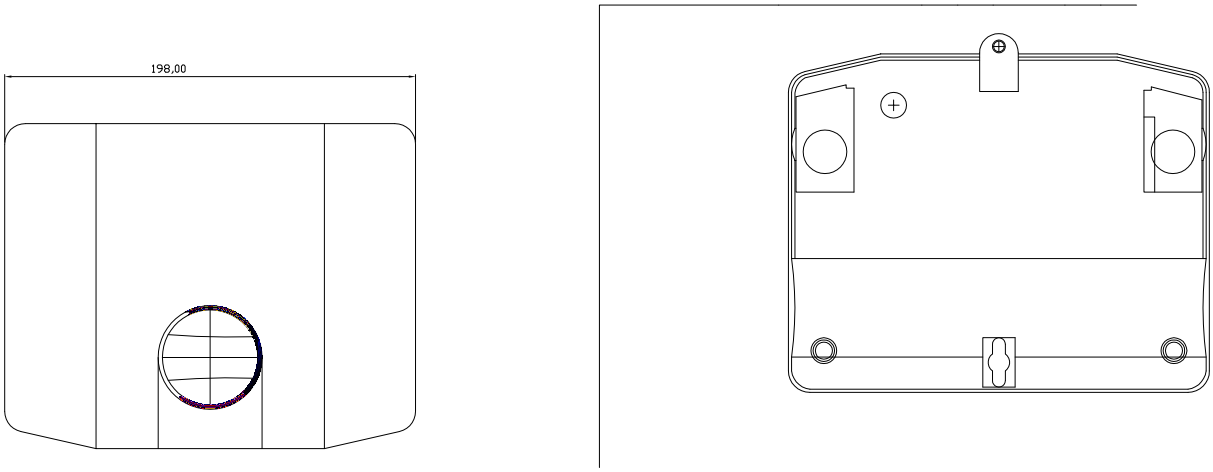

Fig 2 ——→ Undo the screw which holds the cover in place, please use hand to pull out the knob/the screen row line plug carefully before removing the front cover. Remove the front cover from the appliance

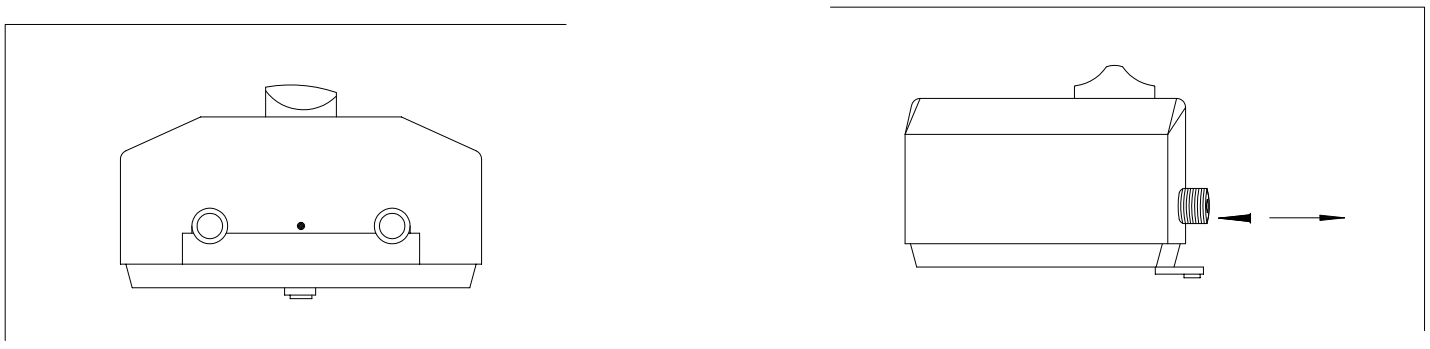

Fig 4 ——→ Drill two holes of 6.00mm diameter: if you install the heater upright above the sink, the distance between every two holes is 156mm; if you install the heater downward under the sink, the distance between every two

holes is 139mm. Put plastic anchor in the holes

Fig4-A: Upward Installation

Fig4-B: Downward Installation

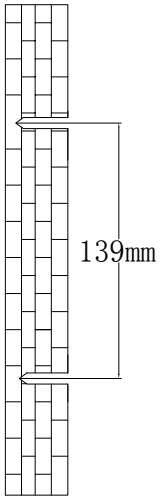

Fig 5 ⟶ For Upright Installation, nail in the floor in the above hole (Fig5-A), fix the appliance on the wall with the above nail; For Downward Installation, nail in the floor in the below hole (Fig5-B), fix the appliance on the wall with the below nail.

Fig5-A: Upward Installation

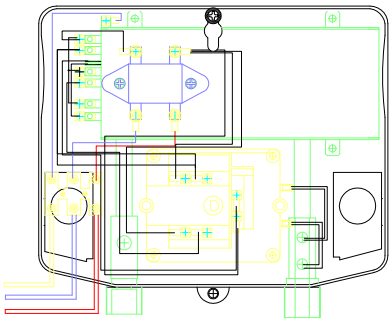

Fig5-B: Downward Installation

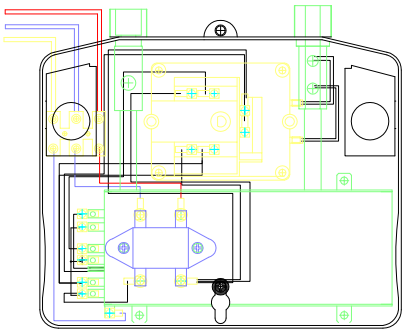

Fig 5 ⟶ Then fix the appliance with nail in another hole, to make sure the whole appliance is installed on firm.

Fig 5-A: Upward Installation

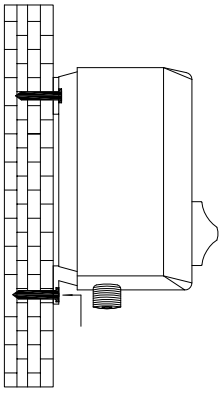

FIG 5-B: Downward Installation

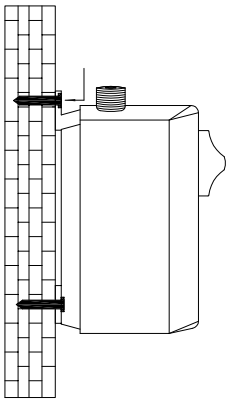

Fig 6 ⟶ Please plug in the knob/screen row line plug. Then tighten the screws to affix the front cover.

Fig 6-A: Upward Installation

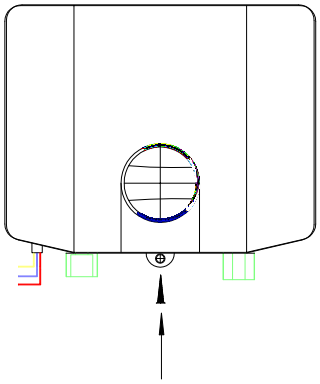

FIG 6-B: Downward Installation

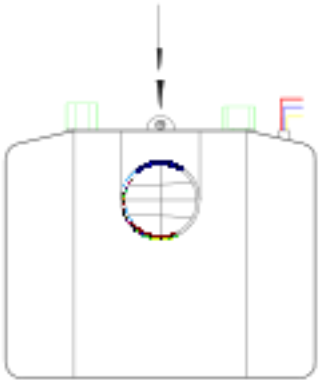

- **If the appliance is equipped with a cable or plug, it is no need to uninstall the case during the installation.**

●Water Connections

1--- All water pipe must comply with national and applicable state and local water pipe codes.

2--- The appliance can be installed right side up or upside down. It needs to be in a vertical position. Please connect the inlet connection (blue arrow points to) to the cold water inlet pipe; connect the outlet connection (red arrow points to) to the hot water outlet pipe .

3---The unit should be connected directly to the main water supply. Flush pipe with water to remove any debris or loose particles. Following pictures are for your reference.

4, It is required that 1/2”NPT water connections be used to install the appliance. Please connect the inlet and outlet pipe in perspective. Following pictures are for your reference.

2, Please remember to install rubber seal rings at the connections. When all water connections are completed, check for leaks and take corrective action before proceeding.

Fig 7-A: Upward Installation

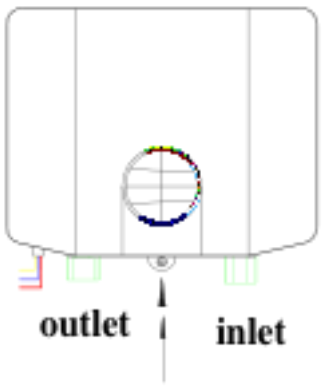

FIG 7-B: Downward Installation

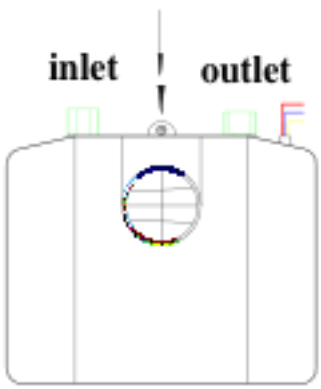

●Electrical connection

1. All electrical work must comply with national and applicable state and local electrical codes
2. Before beginning any work on the electric installation, be sure that main breaker panel switch is OFF to avoid any danger of electric shock, all mounting and plumbing must be completed before proceeding with electrical hook-up.
3. All unit must be connected to a properly grounded dedicated branch circuit of proper voltage rating.
4. For units that come without a power cord, when feeding the cable to terminal blocks/Circuit Breaker, please make sure the metal wire ends and the terminal blocks to touch completely. Then tighten the screws up to make sure good contact is made.

■Operation Instructions

ADV-KH Series (ADV135KH, ADV65KH)

1--- Turn on the circuit breaker to bring electrical power to the unit. The display in the appliance will display red.
2--- Turn on the water faucet for a few minutes until water flow is continuous and all air is purged from water pipes. The unit must be operated after the breakers are turned on. Do not let the unit operate without water when powered on.
3--- After the unit is supplied with power, please turn on the water and then the appliance will start work. The min water flow required to activate the unit is 1.8L/min.
4--- Turn off the water flow, the appliance will stop working. It is not necessary to turn off the heater by the knob switch every time.

5--- Press to adjust the setting temperature, every time press the key,

the setting temperature will be up 1C/1F. When up to 55c/131F, it will begin from 30C/86F recycled after next press. The default temperature is 55°C/131F.

Press continued 3 seconds, the setting temperature will be setup among 100F （38C）， 107F（42C）， 131F（55C）recycled.

6--- Press to convert the temperature display between fahrenheit degree and degree celsius.

Press continued 3 seconds to convert the temperature display (numerals) between upside mounting and upside down mounting.

7--- There is overheat production function for the appliance, if the outlet temperature reaches 60°C, the appliance will automatically decrease the power level, only after the hot water temp. drops to 55°C, the unit will start to work again. In this state, you should reduce the setting temperature.
8--- There is real-time leakage detection function, if there is a leak, the appliance will stop working automatically.
9--- There is a built-in pressure relief valve at the water outlet. When the pressure in the heating element is over 1.2Mpa, the pressure relief valve will open and relieve the pressure.
10--- Please check hot water with hand before you taking a operation to avoid scalding.

- If the unit is not being used in winter, drain out water completely so that the heater will not freeze.
- Please periodically clean inlet strainer and the outlet taps or shower head to keep water flowing freely.

■Trouble-shooting

Problems	Possible Causes	Corrective Actions
1. Inlet and outlet fittings leaking	A. Fittings not tight B. Rubber washer worn-out	A. Tighten fittings. B. Change rubber washer.
2. LED no signal	A. Power not connected. B. LED damaged.	A. Connect power to the unit. B. Change LED.
3. Functional keys not working	A. No water out from shower. B. Water pressure too low. C. Key or PCB damaged.	A. Open valve to get water. B. Open valve to get pressure. C. Change key or PCB.
4. Water too hot	A. Too high temperature set. B. Water flow too small.	A. Set a lower temperature. B. Increase inlet water flow.
5. Water too cold	A. Low temperature set. B. Water flow too much.	A. Set a higher temperature. B. Reduce water flow.
6. Outlet water gets smaller and smaller.	Inlet strainer or shower clogged.	Clean strainer and shower.

■Normal Maintenance

Note: Do not attempt to repair this water heater yourself, call a service person for assistance. Always turn off all POWER to the unit at breaker panel before attempting to repair unit.

NO regular maintenance is required, However, to ensure consistent water flow, it is following maintenance recommended.

1, Periodically remove scale and dirt that may build up at the aerator of the faucet or in the shower head.

2, There is a built in filter screen at inlet connection which should be cleaned from time to time. Please turn off the water flow before doing this.

■Packing List

Item	Unit	Quantity
Electric Water Heater	Unit	1
bracket	Piece	1
Rubber plug and screw	Piece	1
Operation and Installation instructions	copy	1
Cable Clamp and Screw Sets	Set	1

AMT GORMAN RUPP – SEWAGE PUMPS

Please read and save this Repair Parts Manual. Read this manual and the General Operating Instructions carefully before attempting to assemble, install, operate or maintain the product described. Protect yourself and others by observing all safety information. The Safety Instructions are contained in the General Operating Instructions. Failure to comply with the safety instructions accompanying this product could result in personal injury and/or property damage! Retain instructions for future reference. AMT reserves the right to discontinue any model or change specifications at any time without incurring any obligation.

©2013 American Machine & Tool Co., Inc. of PA, A Subsidiary of The Gorman-Rupp Company, All Rights Reserved.

Periodic maintenance and inspection is required on all pumps to ensure proper operation. Unit must be clear of debris and sediment. Inspect for leaks and loose bolts. Failure to do so voids warranty.

Electric Motor-Driven Pumps

Refer to Specific Information and Repair Parts Manual for product specific information.

A Gorman-Rupp Company

SAFETY GUIDELINES

This manual contains information that is very important to know and understand. This information is provided for SAFETY and to PREVENT EQUIPMENT PROBLEMS. To help recognize this information, observe the following symbols:

⚠ DANGER

Danger indicates an imminently hazardous situation which, if not avoided, WILL result in death or serious injury.

⚠WARNING

Warning indicates a potentially hazardous situation which, if not avoided, COULD result in death or serious injury.

⚠ CAUTION

Caution Indicates a potentially hazardous situation which, if not avoided, MAY result in minor or moderate injury.

NOTE: ***Indicates important information that, if not followed, may cause damage to equipment.***

UNPACKING

When unpacking the unit, inspect carefully for any damage that may have occurred during transit. Check for loose, missing or damaged parts. (See pump exploded view and Repair Parts List.) **Do not attempt to assemble or operate pump if any parts are missing or damaged. Determine that all parts are properly installed.**

GENERAL SAFETY INFORMATION

1. Know the pump application, limitations, and potential hazards. Read all manuals included with this product carefully. Be thoroughly familiar with the pump and the proper use of the equipment.

⚠WARNING

Pump should only be used with liquids compatible with pump component materials.

⚠ DANGER

Do not use to pump flammable or explosive fluids such as gasoline, fuel oil, kerosene, etc. Do not use in flammable and/or explosive atmospheres.

When pumping hazardous or dangerous materials, use only in room or area designated for that purpose. For your protection, always wear proper clothing, eye protection, etc. in case of any malfunction. For proper handling techniques and cautions, contact your chemical supplier, insurance company and local agencies (fire dept., etc.). Failure to comply with this warning could result in personal injury and/or property damage.

2. Make certain that the power source (engine) conforms to the requirements of your equipment.
3. Provide adequate protection and guarding around moving parts.
4. Disconnect power before servicing. If the power disconnect is out of sight, lock in the open position and tag it to prevent unexpected application of power. Failure to do so could result in fatal electric shock!
5. Release all pressure within the system before servicing any component.
6. Drain all liquids from the system before servicing.
7. Secure the discharge line before starting the pump. An unsecured discharge line will whip, possibly causing personal injury and/or property damage.
8. Check hoses for weak or worn condition before each use, making certain that all connections are secure.
9. Periodically inspect pump and system components. Perform routine maintenance as required (See Maintenance section).
10. Provide a means of pressure relief for pumps whose discharge line can be shut-off or obstructed.
11. **Personal Safety:**
    a. Wear safety glasses at all times when working with pumps.
    b. Wear a face shield and proper apparel when pumping hazardous chemicals.
    c. Keep work area clean, uncluttered and properly lighted; replace all unused tools and equipment.
    d. Keep visitors at a safe distance from the work area.
    e. Make workshop childproof – with padlocks, master switches, and by removing starter keys.
12. This unit is not waterproof and is not intended to be used in showers, saunas or other potentially wet locations. The motor is designed to be used in a clean dry location with access to an adequate supply of cooling air. Ambient temperature around the motor should not exceed 104°F (40°C). For outdoor installations, motor must be protected by a cover that does not block airflow to and around the motor. This unit is not weatherproof nor is it able to be submersed in water.
13. When wiring an electrically driven pump, follow all electrical and safety codes, as well as the most recent United States National Electrical Code (NEC) and the Occupational Safety and Health Act (OSHA).

⚠WARNING

Risk of Electric shock!

Electric Motor-Driven Pumps

14. **THREE-PHASE MOTORS:** These units are for permanent installation using a power supply with a ground. To reduce the risk of electric shock, electric motor must have one of the following:
    a. Adequately grounded to a metal raceway system.
    b. Use of a separate grounding wire connected to bare metal on the motor frame or to the grounding screw located inside motor terminal box.
    c. By other suitable means.

    Refer to the most recent National Electrical Code (NEC) Article 250 (Grounding) for additional information. ALL WIRING SHOULD BE DONE BY A QUALIFIED ELECTRICIAN.

    On three-phase power, voltages on all three lines should be balanced within 1%. Unbalanced voltages cause motor overheating and poor performance.

⚠WARNING

Risk of Electric Shock! Never connect the green (or green and yellow) wire to a live terminal!

15. **SINGLE PHASE MOTORS:** These units can be wired for either portability with flexible 3-wire cord, or permanent installation using a supply with a ground. To reduce the risk of electric shock, the motor must be securely and adequately grounded! This can be accomplished by either (1) inserting plug (portable) directly into a properly installed and grounded 3-prong grounding type receptacle (as shown in Figure A for 110-120 volt, or Figure B for 220-240 volt) (2) permanently wiring the unit with a grounded, metal raceway system (3) using a separate ground wire connected to the bare metal of the motor frame or (4) other suitable means. The green (or green and yellow) conductor in the cord is the grounding wire.

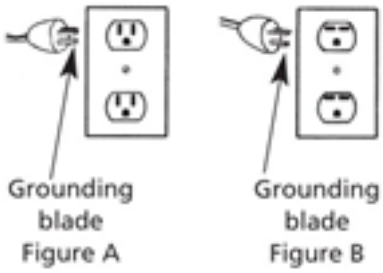

Figure 1 - Grounding Methods

    Where a 2-prong wall receptacle is encountered, it must be replaced with a properly grounded 3-prong receptacle installed in accordance with the National Electrical Code, local codes and ordinances. To ensure a proper ground, the grounding means must be tested by a qualified electrician.
16. Use only 3-wire extension cords that have 3-prong grounding type plugs and 3-pole receptacles that accept the equipment plug.
17. All wiring should be performed by a qualified electrician.
18. Protect electrical cord from sharp objects, hot surfaces, oil and chemicals. Avoid kinking the cord. Replace or repair damaged or worn cords immediately.
19. Keep fingers and foreign objects away from ventilation and other openings. Do not insert any objects into the motor.
20. Use wire of adequate size to minimize voltage drop at the motor.
21. Disconnect power before servicing a motor or its load. If the power disconnect is out of sight, lock it in the open position and tag it to prevent unexpected application of power.
22. Do not touch an operating motor. Modern motors are designed to operate at high temperatures.

⚠WARNING

Do not handle a pump or pump motor with wet hands, when standing on a wet or damp surface or in water.

⚠WARNING

Specific single phase pump motors are equipped with an automatic resetting thermal protector and may restart unexpectedly. Protector tripping is an indication of motor overloading as a result of operating the pump at low heads (low discharge restriction), excessively high or low voltage, inadequate wiring, incorrect motor connections or a defective motor or pump. A motor equiped with a automatic thermal protection will be inidicated on the motor nameplate

INSTALLATION

⚠WARNING

The pumps should not be used in flammable or explosive atmospheres. In order to safely use this product, familiarize yourself with this pump and also with the liquid (chemical, etc.) that is going to be pumped through the unit. This pump is not suitable for many liquids.

For installations where property damage might result from an inoperative or leaking pump due to power outages, discharge line blockage or any other reason, a backup system(s) should be used.
Failure to follow any warning can result in personal injury and/or property damage.

LOCATION

a. **Open Drip Proof Motor** - Clean dry locations with access to an adequate supply of cooling air.
b. **Totally Enclosed Motor** - Harsher environments where damp and dirty conditions may exist. Totally enclosed motors are not water proof.
c. Use only UL listed **Hazardous Location** motors for service in **Hazardous Locations** as defined in Article 500 of the NEC.
d. Temperature around the motor should not exceed 104°F (40°C). Minimum temperature is -20°F (29°C).
e. If the motor nameplate indicates “Air-Over, Cont. A.O.,” etc., the motor must be mounted in the air stream of an air moving device.

1. Locate pump as close to the fluid source as possible, thus making the suction line short and direct as possible.

⚠ CAUTION

The unit should be placed where the motor and electrical components are protected from the weather and extremes of heat, cold and humidity.

2. Attach piping suction line to suction inlet and piping discharge line to discharge outlet. Avoid using looped section of pipe or fittings, which might permit air to ensure airtight pipe connections.

IMPORTANT: If plastic or fabric hose is used for the suction piping, it should be of a reinforced type so as not to collapse under suction. The suction piping should be one size larger than the discharge piping.

Electric Motor-Driven Pumps

3. Support the piping independently of the pump to avoid universal or excessive stresses on the pump casing, which would cause impeller misalignment and possible pump failure.
4. Install both a union and a gate valve (not furnished) on the discharge side of the pump for service convenience.

⚠ CAUTION

Do not use a globe or other restricting type of valve at the discharge. Globe valves seriously restrict the capacity of the pump; however, restricting the discharge of a centrifugal pump will not overload the drive motor.

5. **SELF-PRIMING PUMPS:** It is recommended that a foot valve be used on the suction line to assure quick priming and that a suitable suction strainer be attached to the suction line so that large pieces of foreign material are not drawn into the pump.
    a. Locate pump as close to the fluid source as possible making the suction line as short and direct as possible.

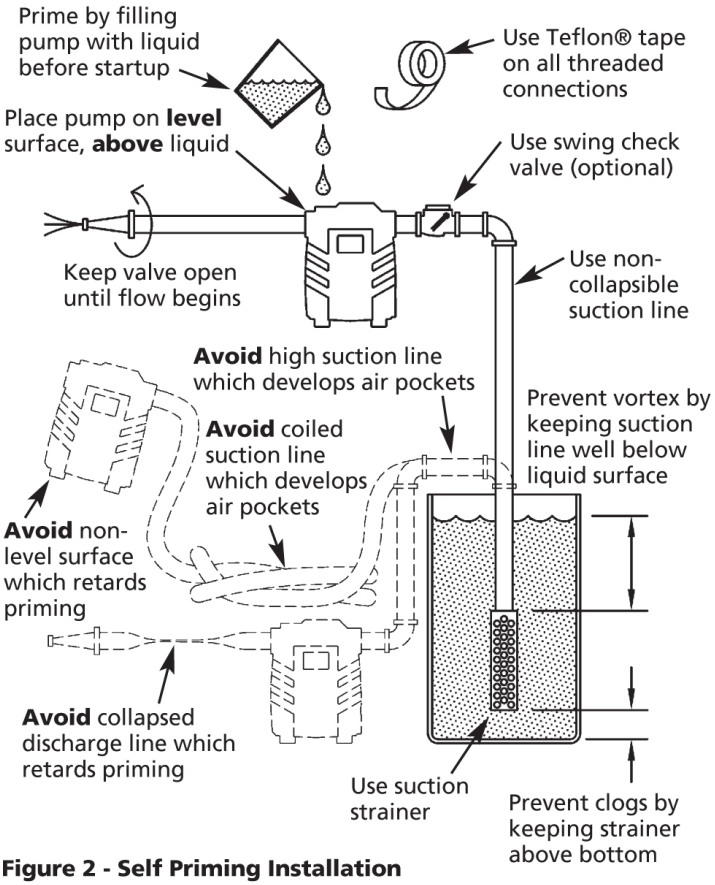

Figure 2 - Self Priming Installation

    b. The suction line should be positioned such that there is a continual upward slope from the fluid source to the pump. Avoid using loops or sections of pipe or fittings which might permit air to become trapped.
    c. Suction piping should be the same size as the discharge piping.

6. **WIRING:** For proper electrical connections, refer to the diagram located on the nameplate or inside the terminal of the motor. Make sure the connections are correct for the voltage being supplied to the motor. Connections should be made with flexible conduit to minimize vibration transmission.

    Whenever possible, the pump should be powered from a separate branch circuit of adequate capacity to keep voltage drop to a minimum during starting and running.

    Select the voltage to be used, either
    a. Single phase - 115V or 230V
    b. Three phase - 230V or 460V

    Check motor wiring to verify which voltage the motor is currently wired for. If the wiring must be changed to conform to a specific voltage requirement, then the motor should be wired according to recommendations of wiring diagrams located on motor nameplate or wiring compartment cover. Make sure unit is properly grounded. A motor to be used with single phase power cannot be used with three phase power and vice versa. If unsure about the above information or the wiring diagrams, consult an electrician familiar with motor wiring.

⚠WARNING

A wrong connection can burn out the pump motor, cause an electrical short or produce an electrical shock. Failure to follow the above warning can result in property damage and/or personal injury. Always wire the motor with a three-wire system, ensuring that a ground wire runs to a good electrical ground such as a grounded water system or conduit. Also, ensure that a good electrical ground is provided at the supply end of the line. Connections should be made with flexible conduit to minimize vibration transmission.

7. Do not operate pump dry. Mechanical seal damage will result.
8. Install any auxiliary components (e.g. pressure switch, time).

OPERATION

SELF-PRIMING PUMPS

It is necessary to prime the pump before initial startup. Prime the pump by filling the casing with liquid through the top fill plug, the discharge port, or by installing a pipe tee at the discharge of the pump. (When installing a tee, use the horizontal leg of the tee as the pump discharge and place a pipe plug in the vertical leg. This procedure will help facilitate priming later.)

NON-PRIMING PUMPS

1. The casing and suction piping must be filled with liquid before the unit can begin pumping. In order to completely fill casing with liquid, entrapped air in casing must be vented. This is accomplished by momentarily loosening or removing the top drain plug located on the casing.

⚠ CAUTION

Do not run pump dry as permanent damage to the mechanical seal will result.

2. Activate the unit.

IMPORTANT: Proper Rotation- Power supply should be applied momentarily to the pump at first and the direction of rotation checked. When viewing the front of the pump, the motor shaft (impeller) should be rotating counterclockwise. If it is not, disconnect power and re-check wiring to motor. (See “Installation” section.) To change rotation on three phase models, interchange any two incoming line (power) leads. Other models, consult driver information that came with driver.

NOTE: Never shut off discharge or restrict suction flow while the pump is operating. It may take up to 5 minutes for a **SELF-PRIMING** pump to prime if

Electric Motor-Driven Pumps

long horizontal/ vertical lines are used. If pump has not picked up prime in 2 minutes, re-prime piping and casing after letting unit cool down for 5 minutes. Re-check all suction connections making sure pipe compound has sealed all connections. Initial priming may take 2 to 3 tries to prime successfully.

⚠ CAUTION

The proper Impeller (motor) rotation is CCW (counter clockwise) facing the front of the pump. Wrong rotation will give low performance, low head and could damage unit and/or injure personnel.

3. On initial start-up (after 15 minutes running time), check power consumption to be sure motor is not overloaded.
4. If motor is overloaded, install a valve on discharge to increase back pressure. Close the valve until pump motor is below full nameplate or within Service Factor (SF) amps.

MAINTENANCE

⚠WARNING

Make certain that the unit is disconnected from the power source before attempting to service or remove any components!

NOTE: Always flush pump thoroughly after use or if unit is not going to be used for any prolonged length of time to prevent crystallization and/or damage to seal and pump.

ROUTINE

1. Pump should be drained when subjected to freezing temperatures. A drain plug is provided on the pump casing.
2. Clean the suction line strainer at regular intervals.
3. Properly selected and installed electric motors are capable of operating for years with minimal maintenance. Periodically clean dirt accumulations from open-type motors, especially in and around vent openings, preferably by vacuuming (avoids imbedding dirt in windings).
4. Periodically check to see if electrical connections are tight.
5. Pump should be checked daily, weekly, monthly, etc. for proper operation. If anything has changed since unit was new, unit should be removed and repaired or replaced. Only qualified electricians or service personnel should attempt to repair this unit. Improper repair and/or assembly can cause an electrical shock hazard.

TROUBLESHOOTING CHART

Problem	Possible Cause(s)	Corrective Action
Motor will not start or run	1 Improperly wired.	1 Check wiring diagram on motor.
	2 Blown fuse or open circuit breaker.	2 Replace fuse or close circuit breaker after reason for overload has been determined and corrected.
	3 Loose or broken wiring.	3 Tighten connections, replace broken wiring.
	4 Stone or foreign object lodged in impeller.	4 Disassemble pump and remove foreign object.
	5 Motor shorted out.	5 Replace.
	6 Thermal overload has opened circuit.	6 Allow unit to cool. Restart after reason for overload has been determined.
	7 Voltage too low at motor terminals due to line drop.	7 Consult local power company. Increase wire size. Check for poor connections.
Motor runs slowly; will not get up to speed	1 Motor wired improperly.	1 Check and recheck wiring diagram on motor. Make internal wiring changes in wiring compartment.
	2 Capacitor burned out (single phase units only).	2 Replace capacitor.
	3 Voltage too low at motor terminals.	3 Increase wire size. Check for poor connections. Check for voltage unbalance (3 phase).
Motor overheats while running under load	1 Dirt blocking ventilation openings.	1 Clean Motor.
	2 Unbalanced supply voltage.	2 Check for faulty connections. Voltage on all three lines should be balanced within 1%. Excessive single phase loads.
	3 Faulty connection.	3 Clean, tighten, or replace.
	4 High or low voltage.	4 Check voltage at motor, should not be more than 10% above or below rated.
Pump will not prime	1 No priming water in casing.	1 Fill pump casing.
	2 Mechanical seal is leaking.	2 Replace (See Maintenance).
	3 Leak in suction line.	3 Use threaded sealant on piping, tighten, repair or replace.
	4 Discharge line is closed and priming air has nowhere to go.	4 Open.
	5 Suction line (or valve) is closed.	5 Open.
	6 Pipe union was used on suction side instead of discharge.	6 Remove union from suction side. Replace with single section of pipe.
	7 Pump is worn.	7 Replace worn parts.

TROUBLESHOOTING CHART (continued)

Problem	Possible Cause(s)	Corrective Action
Little or no discharge	1 Casing not filled with water.	1 Fill pump casing with liquid.
	2 Total head too high.	2 Shorten suction lift and/or discharge head.
	3 Suction head too high.	3 Lower suction head, install foot valve and prime.
	4 Impeller plugged.	4 Disassemble pump and clean impeller.
	5 Rotation incorrect.	5 Correct (See wiring diagram on motor)
	6 Hole or air leak in suction line.	6 Repair or replace suction line.
	7 Foot valve was too small.	7 Match foot valve to piping or install one size larger foot valve.
	8 Impeller damaged.	8 Replace.
	9 Foot valve or suction line not submerged deep enough in water.	9 Submerge lower in water.
	10 Suction piping too small.	10 Increase to pump inlet size or one size larger.
	11 Discharge piping too small.	11 Match to discharge outlet size on pump.
	12 Motor wired incorrectly.	12 Check wiring diagram.
	13 Casing gasket leaking.	13 Replace.
	14 Suction or discharge line valve closed.	14 Open.
	15 Single phase, new installation. Motor wired for 230V, etc. but supply is 115V, etc.	15 Check voltage of incoming power supply. Rewire as necessary.
	16 Mechanical seal is leaking.	16 Replace (See Maintenance).
Loss of suction	1 Air leak in suction line.	1 Use threaded sealant on piping, tighten, repair or replace.
	2 Suction lift too high.	2 Lower suction lift, install foot valve and prime.
	3 Clogged foot valve or strainer.	3 Clean.
Pump vibrates and/or makes excessive noise	1 Mounting plate or foundation not rigid enough.	1 Reinforce.
	2 Foreign material in pump.	2 Disassemble pump and clean.
	3 Impeller damaged.	3 Replace.
	4 Worn motor bearings.	4 Replace.
	5 Suction lift too high.	5 Decrease suction lift.
	6 Cavitation present.	6 Check suction line for proper size and be sure valve is open. Remove excessive lops in suction line. Install gate valve on discharge side of pump and reduce flow as necessary to match suction conditions available.
Pump leaks at shaft	1 Damaged or worn mechanical seal.	1 Replace (See Maintenance).
	2 Corrosion due to character of liquid pumped.	2 Discontinue pumping liquid and consult factory.
	3 Abrasive material in liquid causing an accumulation around the rotating assembly which results in faces opening up and allowing grit between them.	3 Pump not designed for abrasives. Discontinue use
	4 Liquid not compatible with seal.	4 Consult factory. Operational seal may be available.
	5 Temperature too high.	5 Lower liquid temperature below temperature rating of pump, See Specifications.
Pinholes in casting, drips around seal area	1 Cavitation caused by insufficient inlet pressure or suction head (NPSH).	1 Increase inlet pressure by adding a higher liquid level of fluid to source, increasing inlet pressure, or remove piping restrictions(valves, lops, etc.) in suction line.

American Machine & Tool Co., Inc. of PA
(herein "AMT")
400 Spring Street
Royersford, PA 19468
Phone: (610) 948-3800
Fax: (610) 948-5300
www.amtpump.com

General Information

SALES POLICY: AMT products are sold through our established Distributors. We do not sell direct to the consumer or organization not entitled to trade recognition. Therefore, possession of our catalogs and/or price list(s) does not infer an offer to sell.

MINIMUM ORDER: We appreciate your order, however, all orders are subject to a minimum $35.00 net invoice charge (excluding freight). This applies to all pump and parts purchase orders.

PRICES: Prices are subject to change without notice. All orders accepted are subject to prices in effect at time of shipment.

PAYMENT TERMS: Terms, upon establishment of credit, are Net 30 days. Past due accounts may be subject to a service charge of 1.5% per month. Domestic or assignable letter of credit is required for all export trade.

PAST DUE ACCOUNTS: AMT reserves the right to withhold open account shipments on any past due account. Invoices are considered past due after thirty (30) days. In the interest of sound business, all orders are subject to approval of the Credit Department.

SHIPPING INSTRUCTIONS: All shipments will be made F.O.B. the factory. Where instructions for shipment do not appear on the order, the shipment will be made according to our best judgment. Full risk of loss (including transportation delays and losses) shall pass to the customer upon delivery of the products to the carrier at the F.O.B. point. When loss or delay occurs, primary responsibility for tracing rests with the customer. When there is LOSS or APPARENT VISIBLE DAMAGE to a shipment, when tendered for delivery, *DO NOT* give the carrier a clear receipt. Note such damage on the carrier's delivery receipt and *HAVE THE DRIVER SIGN THE RECEIPT.*

PRODUCT REVISIONS: AMT reserves the right to discontinue, change or improve its products or any portions thereof without being obligated to provide such a change or improvement for units sold and/or shipped prior to such a change or improvement.

LEAD TIME: Products designated "Quick Ship Product", also referred to as "QSP" will normally be shipped within 24 hours of receipt of a non-cancellable purchase order. Only limited quantities of "QSP" pumps are available.

STANDARD LEAD TIME: Lead time is two weeks for all non "QSP" product. AMT reserves the right to revise lead times as required due to availability of materials and all other causes beyond our control.

VIP SHIPMENT: Select AMT and IPT branded pumps are available for next day shipment for non-QSP (Quick Ship Products) items and subjected to a specific model surcharge per unit noted in the respective price book. Requires calling for availability, confirmation and a non-cancellable purchase order or credit card payment prior to shipment. The expedited shipping charges are an additional cost added separately from the VIP charges per item. AMT reserves the right to revise lead times as required due to availability of materials and all other causes beyond our control. QSP quantities are limited as determined by AMT.

ALL purchase orders must be submitted via hard copy sent to AMT customer service department by fax, EDI or e-mail.

RETURN GOODS POLICY: Goods shall not be returned without a return goods authorization number (RGA) issued by AMT customer service. The RGA number must be listed on the packing list. Only current model and part numbers with a valid date code may be returned (within one year from date of purchase). **A 20% restocking and packaging charge will apply to all returns. All shipping charges must be pre-paid. No exceptions.**

ORDER CHANGES BY CUSTOMER: Orders in process may not be changed except with written consent and may be subject to special charges.

12 Month Limited Warranty

EXTENT AND DURATION OF LIMITED WARRANTY

Coverage: American Machine & Tool Company (herein "AMT") or IPT Pumps by Gorman-Rupp (herein "IPT") or Gorman-Rupp Industries Division of The Gorman-Rupp Company, Patterson, or the Gorman-Rupp Company (herein referred to as "G-R Unit") each individually warrants that its products and parts shall be free from defects in material ad workmanship for twelve (12) months from the date of purchase by the original end user when installation is made and maintenance is performed in accordance with G-R Unit's recommendations. Wear and tear resulting from use and items normally consumed in use are not covered.

EXCEPTIONS

(A) This Limited Warranty shall not apply to mechanical seals in AMT or IPT pumps and the following products and parts: engines, motors, trade accessories and all other products, components, parts and materials not manufactured by the G-R Units. These items may, however, be covered by the warranties of their respective manufacturers. (B) This warranty does not extend to or apply to any unit which has been repaired or altered at any place other than by a G-R Unit, or by persons not expressly approved by a G-R Unit to make repairs or alterations, nor to any unit the serial number, model number or identification of which has been removed, defaced or altered. (C) This warranty does not extend to any product manufactured by a G-R Unit, which has been subjected to mis-use, neglect, accident, improper installation, or use in violation of instructions furnished by a G-R Unit. (D) Pump Kits: This warranty does not extend to any product sold by a G-R Unit unassembled as a Pump Kit. Pump Kits are warranted against defects in material and workmanship for 60 days from the date of shipment from a G-R Unit. Any Pump Kit parts deemed defective by a G-R Unit will be replaced free of charge within 60 days of shipment. Pump Kits are not returnable for credit.

LIMITATIONS

THE G-R UNITS' SOLE AND EXCLUSIVE WARRANTY WITH RESPECT TO THEIR PRODUCTS AND PARTS IS THIS LIMITED WARRANTY. THIS LIMITED WARRANTY IS IN LIEU OF ALL OTHER EXPRESS AND/OR IMPLIED WARRANTIES, INCLUDING IMPLIED WARRANTIES OF MERCHANTABILITY AND FITNESS FOR PARTICULAR PURPOSE.

EXCLUSIVE REMEDY AND DAMAGES

The sole and exclusive remedy for breach of this Warranty by a G-R Unit and the entire extent of its liability for such breach or for damages arising from the use of the products and parts covered under this Limited Warranty, shall be as follows:

1. **Repair or Replacement:** If inspection shows that any G-R Unit product or part covered under this Limited Warranty is defective in materials or workmanship, the G-R Unit shall repair or replace the defective or non-conforming product or part without charge, whichever the G-R Unit chooses. You must have properly maintained and used the product or part claimed to be defective in accordance with the maintenance schedule or manual, which comes with the product. No allowance will be made for labor, installation, removal, transportation or other charges incurred by you in connection with such repair or replacement.
2. To obtain the above remedy:
    A. Immediately notify the G-R Unit upon discovery of the claimed defect in materials or workmanship and provide the serial number or date code of the product and/or part(s) or provide the G-R Unit with the invoice or bill of sale referencing the product by no later than the expiration date of the warranty period.
    B. The G-R Unit will advise whether inspection will be necessary and how whether repair or replacement will be made. If inspection by the G-R Unit is necessary, the pump or defective part must be sent freight pre-paid to the G-R Unit. Return shipment will be F.O.B. the G-R Unit's plant.
    C. **Return Goods Authorization Requirement:** No product will be accepted for return or replacement without the prior written authorization of the G-R Unit. Upon such authorization, and in accordance with instructions from the G-R Unit, the product will be returned to the G-R Unit, shipping charges prepaid by the Buyer.

3. **Damages:** The G-R Unit's liability for damages for breach of this Limited Warranty shall not exceed the amount of the purchase price of the product or part(s) in respect to which Such damages are claimed. **IN NO EVENT SHALL THE G-R UNITS BE LIABLE FOR INCIDENTAL, CONSEQUENTIAL OR SPECIAL DAMAGES FOR BREACH OF THIS LIMITED WARRANTY.**

Some states do not allow the exclusion or limitation of incidental or consequential damages, so the above limitation or exclusion may not apply to you. This Limited Warranty gives you specific legal rights, and you may also have other rights, which vary from state to state.

A Gorman-Rupp Company

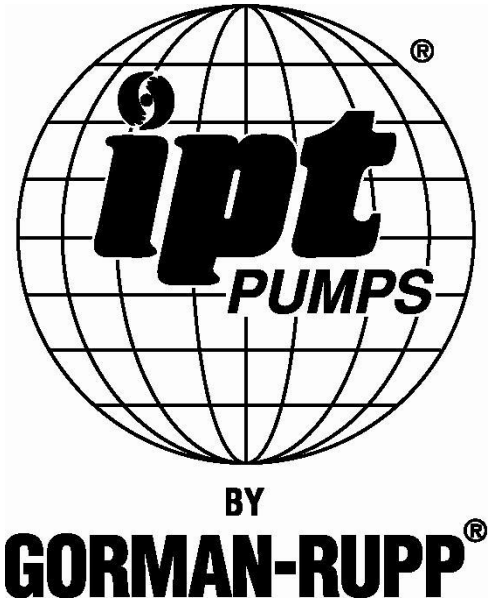

www.amtpump.com

Please read and save this Repair Parts Manual. Read this manual and the General Operating Instructions carefully before attempting to assemble, install, operate or maintain the product described. Protect yourself and others by observing all safety information. The Safety Instructions are contained in the General Operating Instructions. Failure to comply with the safety instructions accompanying this product could result in personal injury and/or property damage! Retain instructions for future reference. AMT reserves the right to discontinue any model or change specifications at any time without incurring any obligation.

©2013 American Machine & Tool Co., Inc. of PA, A Subsidiary of The Gorman-Rupp Company, All Rights Reserved.

Periodic maintenance and inspection is required on all pumps to ensure proper operation. Unit must be clear of debris and sediment. Inspect for leaks and loose bolts. Failure to do so voids warranty.

Sewage/Trash Pumps

Refer to pump manual 1808-634-00 for General Operating and Safety Instructions.

AMT A Gorman-Rupp Company

DESCRIPTION

This sewage/trash pump is a heavy duty, centrifugal, motor driven, self-priming (to 20 ft. lift) unit, after initially filling casing with liquid. Pump is equipped with a silicon carbide mechanical seal, cast iron wear surfaces and a stainless steel clog-resistant impeller. Units are used to handle water containing sewage, stones, sticks, mud and other solids: maximum diameter ½ the discharge NPT size. Handle liquids from 40º to 180º F (4º to 82º C) for use with nonflammable fluids compatible with pump component materials. All units come with built-in suction check valve to aid priming efficiency and easily removable casing/clean out cover and volute for quick debris clean out. An NPT threaded seal wash port is provided on Models 393A-95, 393B-95, 394A-95, 394B-95, 394C-95, 394D-95 and 399A-95. Units are powered by totally enclosed fan cooled (TEFC) motors, single or three phase power. Motor includes stainless steel shaft or stainless steel shaft sleeve.

⚠WARNING

Pumps must be operated in specific ranges as noted on respective curves on page 3 (Figure 3). Failure to adhere to curve will result in damage and cavitation to pump thus voiding warranty.

UNPACKING

Refer to Repair Parts Illustration and Repair Parts List to aid in identifying parts. Unpack and separate all pump components from container making sure all parts are accounted for.

Package should contain:

1. Pump and motor completely assembled.
2. Suction strainer.
3. Specifications Information & Repair Parts Manual.
4. General Operating Instructions & Maintenance Manual.

MAINTENANCE

Note: For information pertaining to the motor and motor parts, consult the motor manual or contact the nearest authorized service representative or the manufacturer.

⚠WARNING

Make certain that the unit is disconnected from the power source before attempting to service or remove any component.

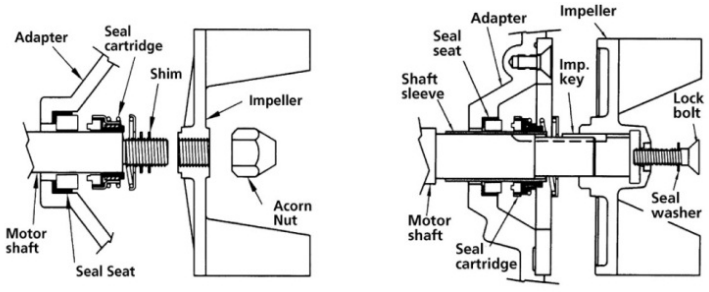

Figure 1 & 2 - Mechanical Seal Replacement

MECHANICAL SEAL REPLACEMENT

Should the mechanical seal, which consists of seal seat (Ref. No. 6), seal cartridge (Ref. No. 5), and shaft sleeve (Ref. No. 19, if applicable) require replacement, proceed as follows and refer to Figures 1 and 2. The seal should also be replaced if the adapter (Ref. No. 8) is to be replaced.

NOTE: Always replace the seal seat, seal cartridge, and shaft sleeve to ensure proper mating of mechanical seal components!

1. Unthread bolts (Ref. No. 9) and remove casing (Ref. No. 1) from adapter.
2. Unthread screw(s) (Ref. No. 11) and remove volute from adapter.
3. 316A-95 and 316B-95 (Figure 1): Remove impeller lock nut (Ref. No. 18). Unscrew impeller (Ref. No. 3) from the motor shaft. Use a rubber mallet or soft block of wood to loosen impeller. Turn it counterclockwise. Remove the impeller shim (Ref. No. 4) and seal cartridge (Ref. No. 5).
4. 393A-95, 393B-95, 394A-95, 394B-95, 394C-95, 394D-95, and 399A-95 (Figure 2): Using an Allen wrench, remove the impeller lock bolt (Ref. No. 18) and o-ring (Ref. No. 25). Slide impeller off motor shaft. Remove the impeller shim (Ref. No. 4), shaft sleeve (Ref. No. 19) and seal cartridge (Ref. No. 5).

IMPORTANT: Care should be taken to ensure that the same number of impeller shims (Ref. No. 4) are replaced behind the impeller as were removed. These impeller shims are located directly behind impeller. These shims as well as the impeller key (Ref. No. 21) become loose as the impeller is removed.

5. Unthread cap screws (Ref. No. 13) and remove adapter from motor.
6. Push seal seat (Ref. No. 6) from the adapter recess with a screwdriver.
7. Clean adapter recess before inserting a new seal seat.

⚠ CAUTION

The precision lapped faces on the mechanical seal are easily damaged. Handle your replacement seal carefully.

8. Carefully wipe the polished surface of the new seal seat with a clean cloth.
9. Wet rubber portion of the seal seat with a light coating of soapy water.
10. While wearing clean gloves or using a clean rag, press seal seat squarely into adapter recess. Avoid scratching the polished surface. If seal seat will not position properly, place a cardboard washer over the polished surface and use a piece of pipe to press in, firmly but gently.
11. After seal seat is in place, dispose of cardboard washer. Check that seat is clean and has not been marred.
12. Using a clean cloth, wipe the shaft and make certain that it is perfectly clean.
13. Secure the adapter on the motor mounting surface with fasteners.

Sewage/Trash Pumps

14. Wet the inside rubber portion of the new seal cartridge with a light coating of soapy water. 316A-95 and 316B-95: Slide cartridge onto motor shaft until cartridge meets seal seat. 393A-95, 393B-95, 394A-95, 394B-95, 394C-95, 394D-95 and 399A-95: Slide cartridge onto shaft sleeve. Slide shaft sleeve with seal cartridge onto motor shaft until cartridge meets seal seat. Reinstall impeller key.

I**MPORTANT:** Before installing new shaft sleeve, apply a bead of non-hardening, pliable sealant (such as Permatex® Form-A-Gasket® No. 2) to motor shaft shoulder.

15. Reinstall any impeller shims that have been removed. (See "Shim Adjustment" section).
16. 316A-95 and 316B-95: Screw impeller back in place, tightening until it is seated against shims and shaft shoulder. 393A-95, 393B-95, 394A-95, 394B-95, 394C-95, 394D-95 and 399A-95: Replace impeller key, impeller, o-ring and impeller lock bolt. Tighten lock bolt until impeller is seated against shims and shaft sleeve.
17. Remount volute with fasteners.
18. Refer to section entitled Shim Adjustment at this time if shaft sleeve or any other parts listed have been replaced.
19. Inspect position of flapper valve to ensure proper movement and sealing.
20. Replace o-ring seal on volute rabbet.

NOTE: Always inspect o-ring seals. Replace when cracked or worn. Wet o-ring with soapy water for ease of assembly.

21. Remount casing.
22. Remount any other parts and reconnect power.

SHIM ADJUSTMENT

When installing a replacement impeller, motor, shaft sleeve, adapter or volute, it may be necessary to adjust the number of impeller shims (Ref. No. 4) to ensure proper running clearance between impeller and the volute wear surface. Proceed as follows:

NOTE: Proper running clearance is 0.010".

1. For impeller replacement, add one (1) shim in addition to those removed originally.
2. For motor replacement, add one (1) shim in addition to the shims removed during disassembly.
3. Reassemble the pump as described in steps 15, 16, and 17. (See "Mechanical Seal Replacement" section).

IMPORTANT: Check the shaft to make sure it is turning freely (rotate the impeller by the impeller lock bolt with an Allen wrench or by the acorn nut with a socket wrench). If it turns freely, check to ensure that the volute and adapter are fitted metal-to-metal where they meet on the outside. If they are not metal-to-metal, tighten fasteners and recheck the shaft for free turning. Tighten carefully, turning the shaft while tightening so that the motor bearings are not damaged in the event that too many shims were installed. If shaft seizes before fasteners are completely tight, disassemble the pump and remove one (1) shim and repeat reassembly.

NOTE: When adding or removing shims, it is best to proceed with a 0.010" increment each time. If motor shaft does turn freely, add shims until it does strike, then remove a 0.010" shim. This will ensure maximum performance.

IMPELLER, WEARPLATE, AND VOLUTE REPLACEMENT

Impeller (Ref. No. 3), wear plate (Ref. No. 23) and volute (Ref. No. 2) are subject to wear only by abrasive sand or sediment laden liquids. If badly worn, all these parts can be replaced easily and the pump thus restored to full efficiency.

NOTE: When the clearance between the impeller and the volute exceeds 1/16" at the face of the impeller or 1/8" on the outside diameter of the impeller, it may be necessary to take corrective action. The increased clearance can cause lengthened priming times and reduce pumping capacity. If both the priming and capacity of your unit are satisfactory for your application, it is recommended that no corrective maintenance be performed regardless of what clearances on your unit may have developed, since the increased clearances in themselves are not generally harmful to your pump.

Normally, new pump clearances can be restored by simply shimming behind the impeller. (Add impeller shims (Ref. No. 4). If the impeller is badly worn, it is recommended that the impeller be replaced. This is usually all that is required since only on unusually abrasive service does the cast iron wear plate and volute show deterioration. Occasionally a stone or hard object might get caught in the impeller and cause damage to the volute. In these cases, follow the instructions below for replacement and refer to the associated Repair Parts Illustration.

1. Disassemble pump for access as described in MECHANICAL SEAL REPLACEMENT, steps 1, 2, 3 and 4.
2. Replace parts as necessary.

NOTE: When replacing volute, attach flapper valve to new volute.

To replace rear wear plate (Ref. No. 23), remove impeller (Ref. No. 3) and fasteners (Ref. No. 24).

NOTE: Before installing new parts, clean all mating surfaces thoroughly.

CLEANING

These units are designed with a removable volute and suction cleanout cover (394A-95, 394B-95, 394C-95, 394D-95 and 399A-95) enabling the pump to be cleaned or unclogged with ease. Remove the suction clean out cover plate (Ref. No. 26) and gasket and/or remove the casing and volute. Remove any debris found inside the unit, reassemble as described in MECHANICAL SEAL REPLACEMENT steps 17 to 22.

NOTE: When replacing clean out cover plate, carefully wipe clean all surfaces on which the gasket has contact. Also, make sure the gasket is in position.

FLAPPER VALVE CLEANING

If debris clogging the flapper valve becomes a constant problem, the flapper area can be cut from the perimeter gasket area and removed from the pump. It is important that the perimeter of the flapper valve remains to seal the inlet area of the casing/volute from the discharge area.

NOTE: Priming efficiency will be reduced if flapper portion is removed.

NOTE: Do not remove entire flapper valve. Perimeter of valve must remain; remove only the flapper area. The pump will not prime and performance will be affected if entire flapper valve is removed.

Sewage/Trash Pumps

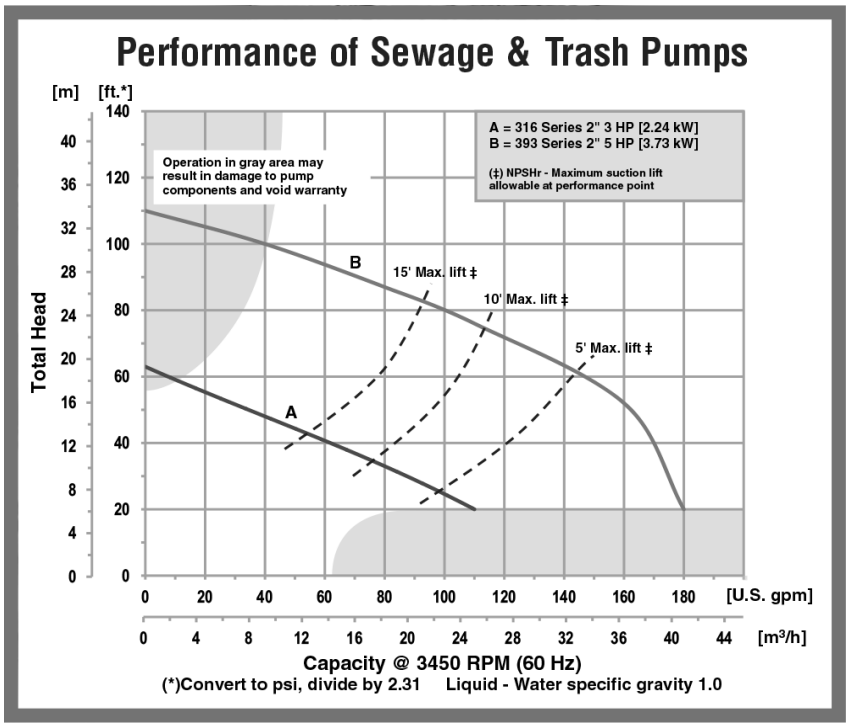

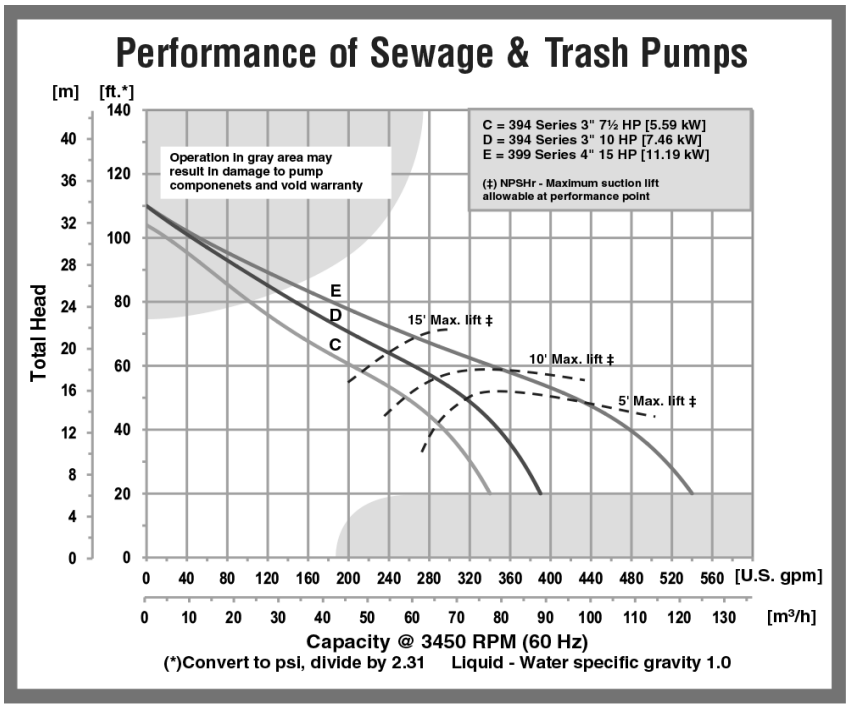

Figure 3 - Performance Curve

Sewage/Trash Pumps

For Repair Parts contact dealer where pump was purchased.

Please provide following information:
-Model Number
-Serial Number (if any)

Part description and number as shown in parts list

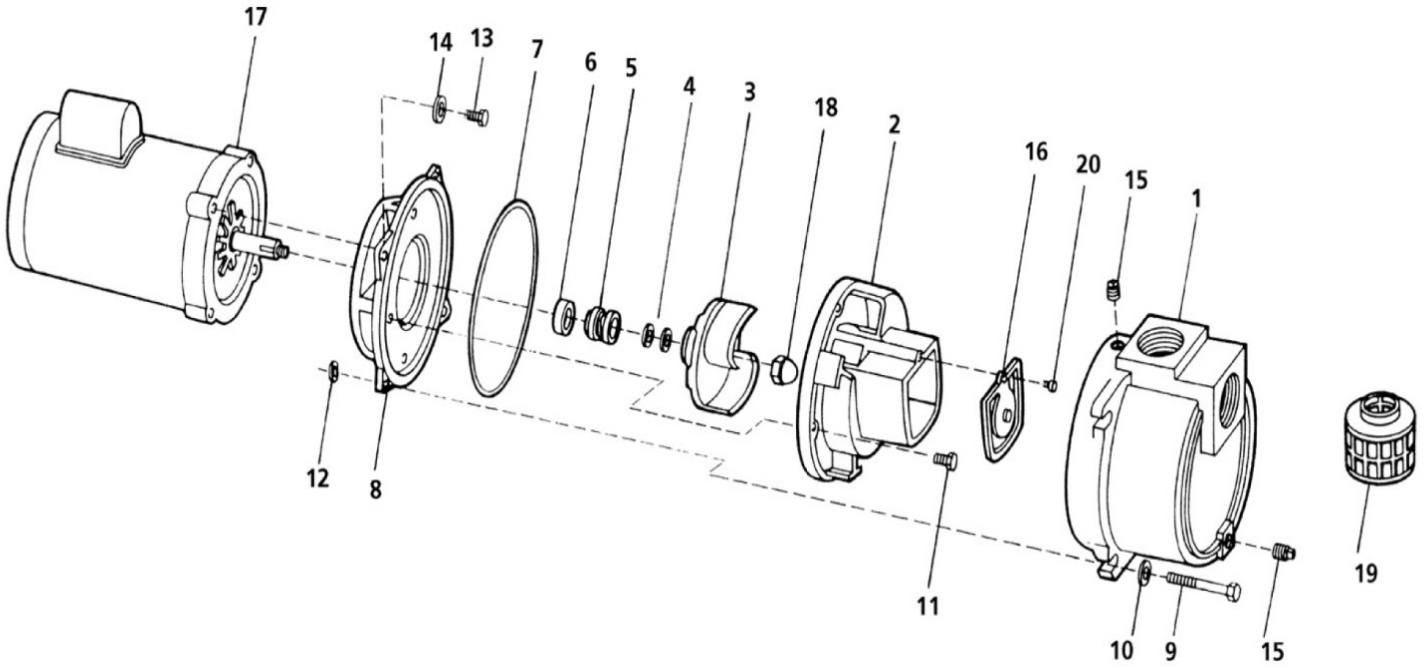

Figure 4 - Repair Parts Illustrations

Repair Parts List

Ref No.	Description	Part Number for Models 316A-95	316B-95	Qty
1	Casing	2111-001-02	2111-001-02	1
2	Volute	3163-150-09	3163-150-09	1
3	Impeller	3163-011-01	3163-011-01	1
4	Impeller Shim Set	1806-044-90	1806-044-90	1
5 & 6	Seal Assembly – Viton and Silicon Carbide	1640-165-90	1640-165-90	1
7	O-Ring – Buna-N	Incl. w/Ref. 21	Incl. w/Ref. 21	1
8	Adapter	1608-011-00	1608-011-00	1
9	3/8"-16 UNC x 2-3/4" Hex Head Bolt	*	*	4
10	3/8" Flat Washer	*	*	4
11	#10-24 UNC x 7/8" S.S. Socket Head Cap Screw	*	*	1
12	3/8"-16 UNC Hex Nut	*	*	4
13	3/8"-16 UNC x 1" Hex Head Cap Screw	*	*	4
14	3/8" Split Lock Washer	*	*	4
15	½" NPT Pipe Plug	*	*	2
16	Flapper Valve Assembly – Buna-N	Incl. w/Ref. 21	Incl. w/Ref. 21	1
17	△ Motor	1626-312-00	1626-306-00	1
18	Impeller Lock Nut	1784-001-00	1784-001-00	1
19	Suction Strainer	1679-001-00	1679-001-00	1
20	#10-24 UNC x 3/8" Flat Head Machine Screw	*	*	1
21	Gasket Kit – Buna-N (Includes Ref. Nos. 7 & 16)	3163-300-90	3163-300-90	1

(△) Foot package 1626-040-00 required on these motors.

(*) Standard hardware item, available locally.

Sewage/Trash Pumps

For Repair Parts contact dealer where pump was purchased.

Please provide following information:
-Model Number
-Serial Number (if any)

Part description and number as shown in parts list

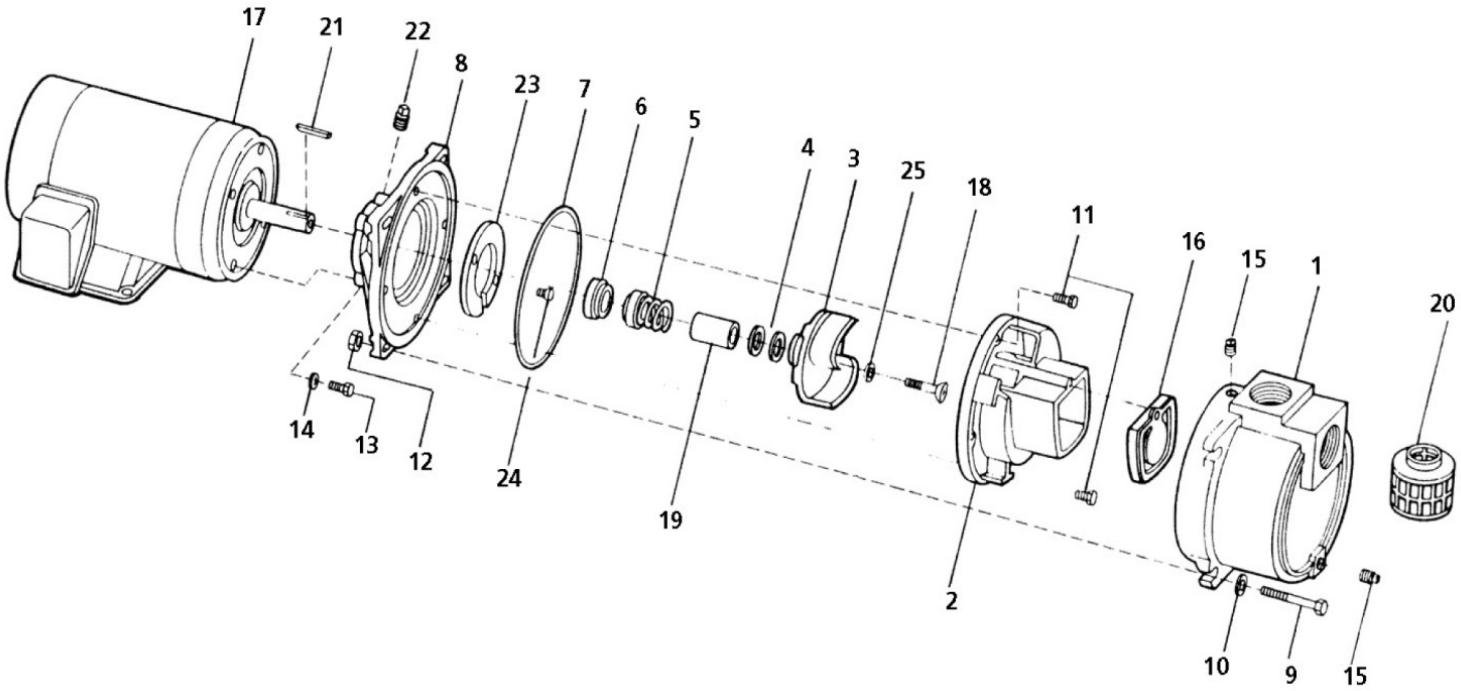

Figure 5 - Repair Parts Illustrations

Repair Parts List

Ref No.	Description	Part Number for Models 393A-95	393B-95	Qty
1	Casing	2112-001-02	2112-001-02	1
2	Volute	2182-002-01	2182-002-01	1
3	Impeller Kit	3935-011-98	3935-011-98	1
	(Includes Ref. Nos. 3, 4, 18, & 21)			
4	Impeller Shim Set	1664-000-90	1664-000-90	1
5 & 6	Seal Assembly – Viton and Silicon Carbide	1640-167-90	1640-167-90	1
7	O-Ring – Buna-N	Incl. w/Ref. 26	Incl. w/Ref. 26	1
8	Adapter	3655-030-01	3655-030-01	1
9	3/8"-16 UNC x 3-1/2" Hex Head Bolt	*	*	4
10	3/8" Flat Washer	*	*	4
11	#10-24 x 7/8" Machine Screw, SS	*	*	2
12	3/8"-16 Hex Nut	*	*	4
13	3/8"-16 x 1-1/4" Hex Head Cap Screw	*	*	4
14	3/8" Helical Split Lock Washer	*	*	4
15	½"-14 NPT Pipe Plug	*	*	2
16	Flapper Valve Assembly – Buna-N	1609-002-00 & Incl. w/Ref. 26	1609-002-00 & Incl. w/Ref. 26	1
17	Motor	1626-352-00	1626-078-00	1
18	Impeller Screw	Incl. w/Ref. 3	Incl. w/Ref. 3	1
19	Shaft Sleeve	1555-140-02	1555-140-02	1
20	Suction Strainer	1679-001-00	1679-001-00	1
21	Impeller Key	1471-030-00 & Incl. w/Ref. 3	1471-030-00 & Incl. w/Ref. 3	1
22	1/8” Pipe Plug	*	*	1
23	Wear Plate	3655-032-01	3655-032-01	1
24	5/16"-18 x ½" Flat Head Machine Screw	*	*	2
25	O-Ring – Buna-N	Incl. w/Ref. 26	Incl. w/Ref. 26	1
26	Gasket Kit – Buna-N	393A-300-90	393A-300-90	1
	(Includes Ref. Nos. 7, 16, & 25)			

NOTE: When replacing a seal assembly, a new O-ring (Ref. No. 25) should be also replaced.

(*) Standard hardware item, available locally.

Sewage/Trash Pumps

For Repair Parts contact dealer where pump was purchased.

Please provide following information:
-Model Number
-Serial Number (if any)

Part description and number as shown in parts list

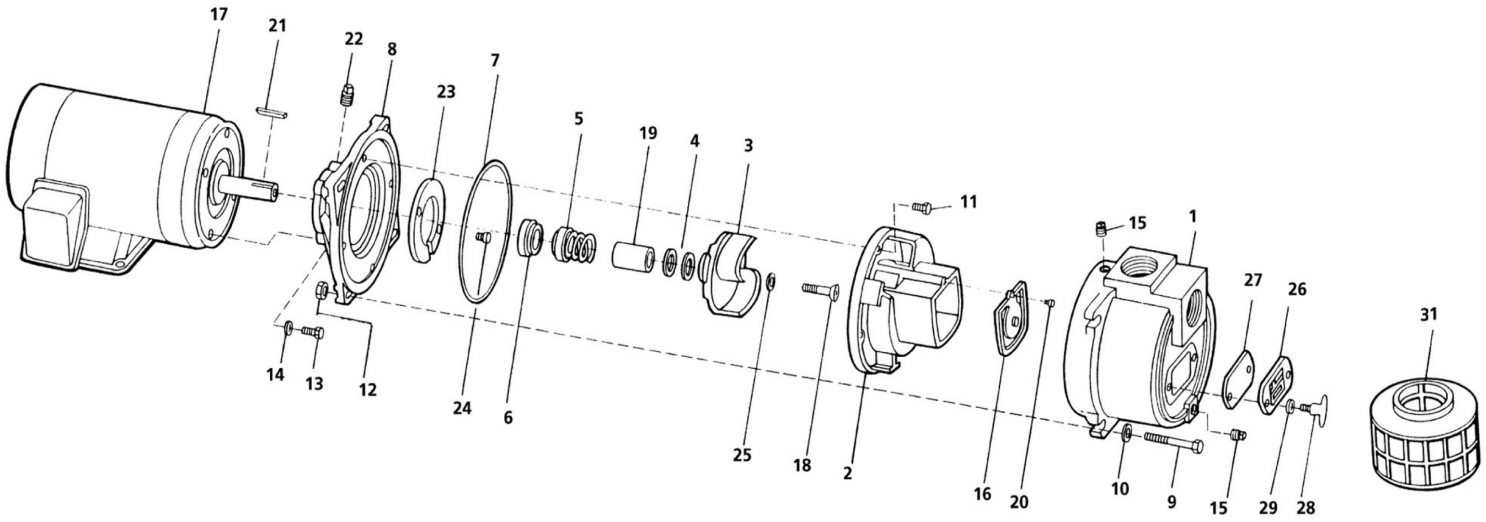

Figure 6 - Repair Parts Illustrations

Repair Parts List

Ref No.	Description	Part Number for Models 394A-95	394B-95	Qty
1	Casing	2113-003-01	2113-003-01	1
2	Volute	2184-002-01	2184-002-01	1
3	Impeller Kit	394A-010-98	394A-010-98	1
	(includes Ref. Nos. 3, 4, 18, & 21)			
4	Impeller Shim Set	1664-000-90	1664-000-90	1
5 & 6	Seal Assembly – Viton and Silicon Carbide	1640-167-90	1640-167-90	1
7	O-Ring – Buna-N	Incl. w/Ref. 30	Incl. w/Ref. 30	1
8	Adapter	1990-031-01	1990-031-01	1
9	1/2"-13 x 4-3/4" Hex Bolt	*	*	4
10	½" Flat Washer	*	*	4
11	1/4"-20 x 7/8" Hex Screw (stainless steel)	*	*	2
12	1/2"-13 Hex Nut	*	*	4
13	3/8"-16 x 1-1/4" Hex Screw	*	N/A	4
13	1/2"-13 x 1-1/2" Hex Screw	N/A	*	4
14	3/8" Helical Spring Lock Washer	*	N/A	4
14	½" Helical Spring Lock Washer	N/A	*	4
15	3/4"-14 NPT Pipe plug	*	*	2
16	Flapper Valve Assembly – Neoprene	3590-070-90	3590-070-90	1
17	Motor	1626-353-00	1626-079-00	1
18	Impeller Screw	Incl. w/Ref. 3	Incl. w/Ref. 3	1
19	Shaft Sleeve	1555-140-02	1555-140-02	1
20	#10-24 x 3/8" Flat Head Machine Screw	*	*	1
21	Impeller Key	1471-030-00	1471-030-00	1
22	1/8”-27 Pipe Plug	*	*	1
23	Wear Plate	2182-004-01	2182-004-01	1
24	5/16"-18 x ½" Flat Head Machine Screw	*	*	2
25	O-Ring – Buna-N	Incl. w/Ref. 30	Incl. w/Ref. 30	1
26	Clean Out Cover	2115-002-01	2115-002-01	1
27	Clean Our Gasket – Neoprene	2115-003-00	2115-003-00	1
28	Clean Out Handle	1601-000-00	1601-000-00	2
29	3/8” Flat Washer	*	*	2
30	Gasket Kit – Buna-N	394A-300-90	394A-300-90	1
	(Includes Ref. Nos. 7, 16, 25, & 27)			
31	Suction Strainer	1681-000-00	1681-000-00	1

NOTE: When replacing a seal assembly, a new O-ring (Ref. No. 25) should be also replaced.

(*) Standard hardware item, available locally.

Sewage/Trash Pumps

For Repair Parts contact dealer where pump was purchased.

Please provide following information:
-Model Number
-Serial Number (if any)

Part description and number as shown in parts list

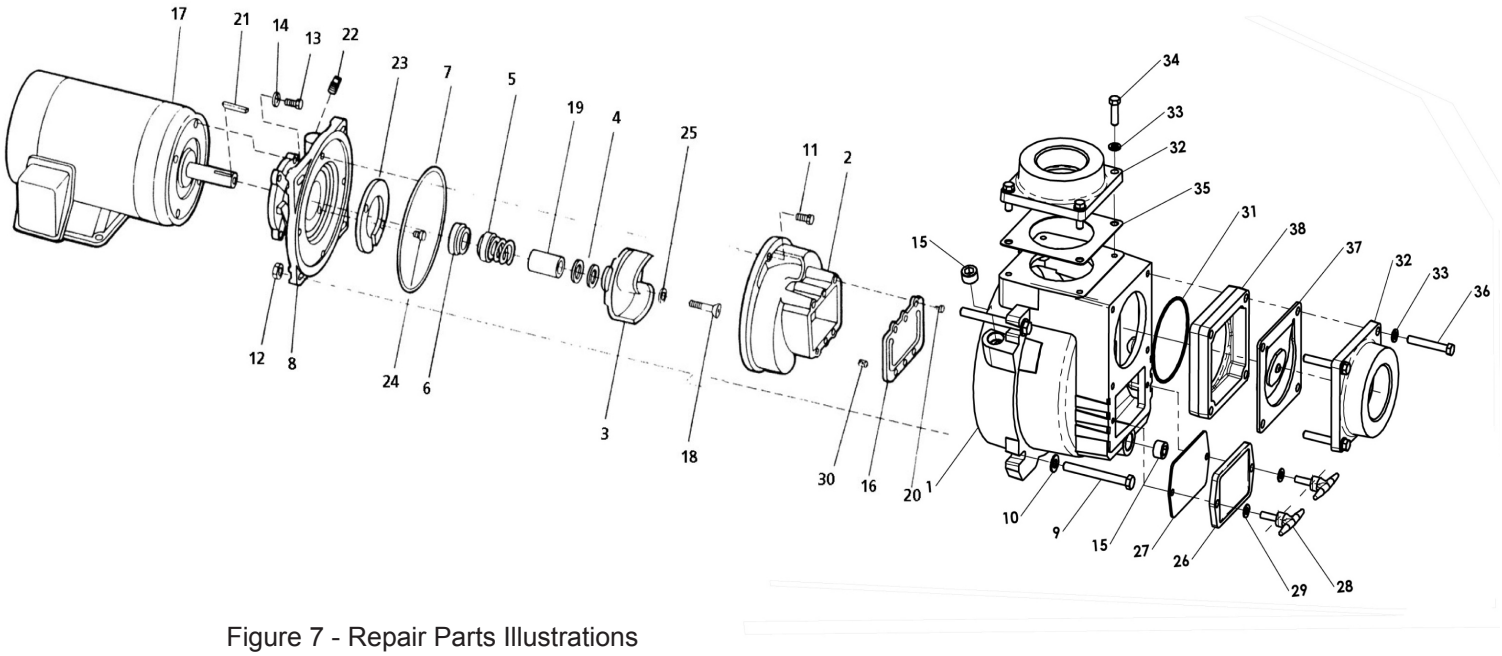

Figure 7 - Repair Parts Illustrations

Repair Parts List

Ref No.	Description	Part Number for Models 394E-95 394F-95	399C-95	Qty
1	Casing Kit	399C-002-95	399C-002-95	1
	(includes Ref. Nos. 1, 9, 10, 12, & 15)			
2	Volute Kit	399C-150-95	399C-150-95	1
	(includes Ref. Nos. 2 & 11)			
3	Impeller Kit	394C-010-98	399A-010-98	1
	(includes Ref. Nos. 3, 4, 18, & 21)			
4	Impeller Shim Set	1664-000-90	1664-000-90	1
5 & 6	Seal Assembly – Viton and Silicon Carbide	1640-167-90	1640-167-90	1
7	O-Ring – Buna-N	Incl. w/Ref. 39	Incl. w/Ref. 39	1
8	Adapter	394B-031-95	394B-031-95	1
	(includes Ref. Nos. 8, 13, 14, 19, 22, 23, & 24)			
9	1/2"-13 x 4-3/4" Hex Bolt	*	*	4
10	½" Flat Washer	*	*	4
11	1/4"-20 x 3/4" Hex Screw (stainless steel)	*	*	2
12	1/2"-13 Hex Nut	*	*	4
13	1/2"-13 x 1-1/2" Hex Screw	*	*	4
14	½" Lock Washer	*	*	4
15	3/4"-14 NPT Pipe plug	Incl. w/Ref. 39	Incl. w/Ref. 39	2
16	Volute Gasket – Buna-N	Incl. w/Ref. 39	Incl. w/Ref. 39	1
17	Motor – 1PH	1626-354-00	N/A	1
	Motor – 3PH	1626-355-00	1626-047-00	1
18	Impeller Screw	1756-004-00	1756-004-00	1
19	Shaft Sleeve	1555-140-02	1555-140-02	1
20	#10-24 x 3/8" Flat Head Machine Screw	*	*	1
21	Impeller Key	1471-030-00	1471-030-00	1
22	1/8” NPT Pipe Plug	*	*	1
23	Wear Plate	399C-060-95	399C-060-95	1
	(includes Ref. Nos. 23 & 24)			
24	5/16"-18 x ½" Flat Head Machine Screw	*	*	2
25	O-Ring – Buna-N	Incl. w/Ref. 39	Incl. w/Ref. 39	1
26	Clean Out Cover/Handle Kit	399C-040-95	399C-040-95	1
	(includes Ref. Nos. 26, 28, & 29)			
27	Clean Our Gasket – Neoprene	Incl. w/Ref. 39	Incl. w/Ref. 39	1
28	Clean Out Handle	Incl. w/Ref. 26	Incl. w/Ref. 26	2
29	3/8” Flat Washer	Incl. w/Ref. 26	Incl. w/Ref. 26	2
30	1/8" Diameter x 3/8" Long Pin	Incl. w/Ref. 26	Incl. w/Ref. 26	4
31	O-Ring – Buna-N	Incl. w/Ref. 39	Incl. w/Ref. 39	1
32	Discharge Flange Kit	394E-080-95	399C-08095	2
	(includes Ref. Nos. 32, 33, & 34)			
33	7/16" Lock Washer	*	*	8
34	7/16"-14 x 1-1/2" Hex Screw	*	*	4
35	Flange Gasket – Neoprene	Incl. w/Ref. 39	Incl. w/Ref. 39	
36	7/16"-14 x 3" Hex Screw	*	*	
37	Check Valve Assembly - Neoprene	399C-070-90	399C-070-90	1
38	Suction Flange Kit	394E-050-95	399C-050-95	1
	(includes Ref. Nos. 32, 33, 36, & 38)			
39	Gasket Kit – Buna-N	399C-300-90	399C-300-90	1
	Gasket Kit – Viton	399C-300-91	399C-300-91	
	(Includes Ref. Nos. 7, 16, 20, 25, 27, 30, 31, & 35)			
40	Suction Strainer (not shown)	1681-000-00	1681-000-00	1

NOTE: When replacing a seal assembly, a new O-ring (Ref. No. 25) should be also replaced.

(*) Standard hardware item, available locally.

BURKERT – SOLENOID VALVES

bürkert
FLUID CONTROL SYSTEMS

Type 0142
Magnetventil

2/2-Way Solenoid Valve
2/2-Wege-Magnetventil
Électrovanne à 2/2 voies

Operating Instructions
Bedienungsanleitung
Manuel d'utilisation

Address / Adresse
Germany / Deutschland / Allemagne
Bürkert Fluid Control Systems
Sales Center
Christian-Bürkert-Str. 13-17
D-74653 Ingelfingen
Tel. + 49 (0) 7940 - 10 91 111
Fax + 49 (0) 7940 - 10 91 448
E-mail: info@de.buerkert.com

International
www.burkert.com → Bürkert → Company → Locations

Manuals and data sheets on the Internet:
www.burkert.com
Bedienungsanleitungen und Datenblätter im Internet:
www.buerkert.de
Manuel d'utilisation et fiches techniques sur Internet :
www.buerkert.fr

© 2013 Bürkert Werke GmbH

Operating Instructions 1307/04_EU-ml_00893140 / Original DE

MAN 1000010221 ML Version: F Status: RL (released | freigegeben) printed: 11.05.2016

english

1. OPERATING INSTRUCTIONS

The operating instructions contain important information.
- Read the instructions carefully and follow the safety instructions in particular, and also observe the operating conditions.
- Instructions must be available to each user.
- The liability and warranty for Type 0142 are void if the operating instructions are not followed.

2. SYMBOLS

→ designates a procedure which you must carry out.

Warning of serious or fatal injuries:

DANGER!
In case of imminent danger.

WARNING!
In case of potential danger.

Warning of minor or moderately severe injuries:

CAUTION!

Warns of damage to property:

NOTE!

3. INTENDED USE

Non-authorized use of the solenoid valve type 0142 may be a hazard to people, nearby equipment and the environment.
- The device is designed to control, shut off and meter neutral and aggressive media up to a viscosity of 21 mm²/s.
- Provided the cable plug is connected and installed correctly, e.g. Bürkert type 2508, the device satisfies protection class IP65 in accordance with DIN EN 60528 / IEC 60529.
- Use according to the permitted data, operating conditions and conditions of use specified in the contract documents and operating instructions. These are described in the chapter entitled "Technical data".
- Correct transportation, correct storage and installation and careful use and maintenance are essential for reliable and problem-free operation.
- Use the device only as intended.

3.1. Restrictions

If exporting the system/device, observe any existing restrictions.

4. BASIC SAFETY INSTRUCTIONS

These safety instructions do not make allowance for any contingencies and events which may arise during installation, operation and maintenance.

Danger – high pressure!
- Before loosening the lines and valves, turn off the pressure and vent the lines.

Risk of electric shock!
- Before reaching into the system, switch off the power supply and secure to prevent reactivation!
- Observe applicable accident prevention and safety regulations for electrical equipment.

Risk of burns/Risk of fire if used continuously through hot device surface!
- Keep the device away from highly flammable substances and media and do not touch with bare hands.

Risk of injury due to malfunction of valves with alternating current (AC).

Sticking core causes coil to overheat, resulting in a malfunction.
- Monitor process to ensure function is in perfect working order.

Risk of short-circuit/escape of media through leaking screw joints.
- Ensure seals are seated correctly.
- Carefully screw valve and connection lines together.

To prevent injury, ensure that:
- Do not make any external modifications to the device bodies. The system cannot be activated unintentionally.
- Installation and repair work may be carried out by authorized technicians only and with the appropriate tools.
- After an interruption in the power supply or pneumatic supply, ensure that the process is restarted in a defined or controlled manner.
- Do not put any loads on the body.
- The device may be operated only when in perfect condition and in consideration of the operating instructions.

english

5. TECHNICAL DATA

5.1. Operating conditions

The following values are indicated on the type label:
- Voltage (Tolerance ± 10 %) / Current type
- Coil power consumption (active power in W - at operating temp.)
- Pressure range
- Body material
  PVC (PV) or PVDF (PD)
- Seal material
  FKM, EPDM

Protection class: IP65 with accordance with DIN EN 60529 / IEC 60529 with cable plug, e. g. Bürkert Type 2508

Operating principle:

A (NC) 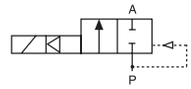

2/2-way valve, normally closed

B (NO) 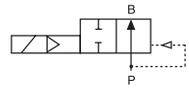

2/2-way valve, normally opened

5.2. Application conditions

Ambient temperature: PVC 0 - +40 °C
PVDF 0 - +55 °C

Permitted medium temperature depending on body material:

Body material	Medium temperature
PVC	0 °C ... +50 °C
PVDF	0 °C ... +70 °C

Pressure - Temperature Diaphragm for PVC and PVDF:

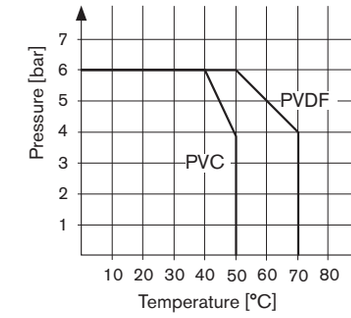

Permitted media depending on seal material:

Seal material	Permitted media
FKM	Oxidizing acids and substances, water
EPDM	Alkalis, alkaline washing and bleaching lyes, water, oil- and grease-free media

Operating duration

Unless otherwise indicated on the type label, the solenoid system is suitable for continuous operation.

Important information for functional reliability during continuous operation!
If standstill for a long period at least 1-2 activations per day are recommended.

Service life

High switching frequency and high pressures reduce the service life.

5.3. Conformity

In accordance with the EC Declaration of conformity, the solenoid valve Type 0142 is compliant with the EC Directives.

5.4. Standards

The applied standards, which verify conformity with the EC Directives, can be found on the EC Type Examination Certificate and / or the EC Declaration of Conformity.

5.5. Type label

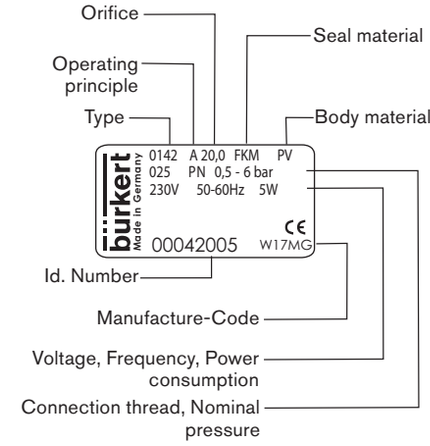

6. INSTALLATION

6.1. Safety instructions

DANGER!

Risk of injury from high pressure in the equipment!
- Before loosening the lines and valves, turn off the pressure and vent the lines.

Risk of injury due to electrical shock!
- Before reaching into the system, switch off the power supply and secure to prevent reactivation!
- Observe applicable accident prevention and safety regulations for electrical equipment!

WARNING!

Risk of injury from improper installation!
- Installation may be carried out by authorized technicians only and with the appropriate tools!

Risk of injury from unintentional activation of the system and an uncontrolled restart!
- Secure system from unintentional activation.
- Following installation, ensure a controlled restart.

6.2. Before installation

Installation position: any, actuator preferably upwards.

Procedure:

→ Check pipelines for dirt and clean.

→ Install a dirt filter before the valve inlet (≤ 500 µm).

6.3. Installation

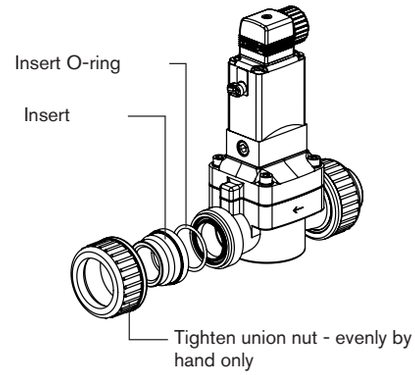

MAN 1000010221 ML Version: F Status: RL (released | freigegeben) printed: 11.05.2016

NOTE!

Caution risk of breakage!
- Do not use the coil as a lifting arm.

→ Body with welded sleeve: Use PVDF.

→ Body with bonded sleeves: Use Tangit special adhesive.

Valve body must not be installed under tension.

→ Observe direction of flow:
The arrow on the body indicates the direction of flow (no function in opposite flow direction).

6.4. Manual emergency actuation

CAUTION!

Discharge of medium due to loss of the O-rings!
- If the O-rings are lost, the valve will leak. Medium may be discharged.

NOTE!

Caution!
- When the manual emergency actuation is locked, the valve can no longer be actuated electrically.

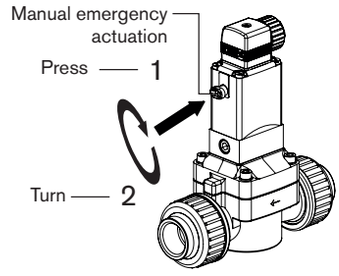

6.5. Electrical connection of the cable plug

WARNING!

Risk of injury due to electrical shock!
- Before reaching into the device / equipment switch off the power supply and secure to prevent reactivation!
- Observe applicable accident prevention and safety regulations for electrical equipment!

If the protective conductor contact between the coil and body is missing, there is danger of electrical shock!
- Always connect protective conductor.
- Check electrical continuity between coil and body.

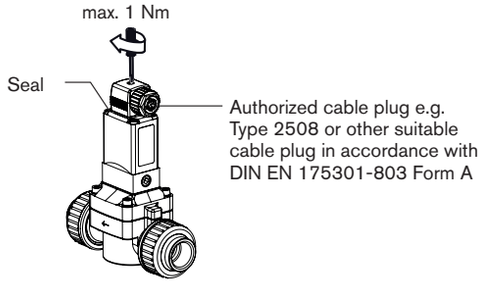

Note the voltage and current type as specified on the type label.

Procedure:

→ Tighten cable plug (for permitted types see data sheet), observing max. torque 1 Nm.

→ Check that seal is fitted correctly.

→ Connect protective conductor and check electrical continuity between coil and body.

6.5.1. Electrical connection - Pulse

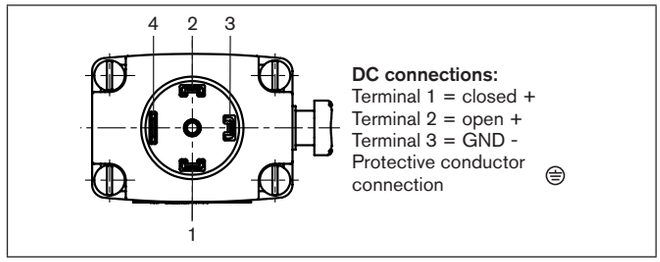

The connection terminals in the cable plug are identified with the numbers 1 to 3 according to the terminals on the valve.

Procedure:

→ Connect the pulse valves (variable code CF 02).

→ For direct current versions connect negative terminal to terminal 3.

NOTE!

Important information:
- Avoid emitting pulses simultaneously to both coil windings.
- Do not switch any other consumers (relays, etc.) at the same time as the terminals.
- The coil connection, to which voltage is not applied, must be galvanically isolated (open).
- If two or more valves are switched in parallel, ensure that this requirement is met by using 2-pole or multi-pole switches.

7. MAINTENANCE, TROUBLESHOOTING

7.1. Safety instructions

WARNING!

Risk of injury from improper maintenance!
- Maintenance may be carried out by authorized technicians only and with the appropriate tools!

Risk of injury from unintentional activation of the system and an uncontrolled restart!
- Secure system from unintentional activation.
- Following maintenance, ensure a controlled restart.

7.2. Malfunctions

If malfunctions occur, check:

→ the device has been installed according to the instructions,

→ the electrical and fluid connections are correct,

→ the device is not damaged,

→ all screws have been tightened,

→ the voltage and pressure have been switched on,

→ the pipelines are clean.

MAN 1000010221 ML Version: F Status: RL (released | freigegeben) printed: 11.05.2016

Valve does not switch

Possible cause:

- Short-circuit or coil interrupted.
- Medium pressure outside the permitted pressure range.
- Manual emergency actuation locked.

Valve does not close

Possible cause:

- Internal space of the valve is dirty.
- Manual emergency actuation locked.
- Flow restrictor (valve inlet) or pilot holes (valve inlet / outlet) dirty.

8. SPARE PARTS

CAUTION!

Risk of injury and/or damage by the use of incorrect parts!

Incorrect accessories and unsuitable spare parts may cause injuries and damage the device and the surrounding area.

- Use only original accessories and original spare parts from Bürkert.

8.1. Ordering spare parts

Order the spare-part sets specifying the positions (Pos. 1: Pilot control set, Pos. 2: Wearing part set) and the identification number of the device.

8.2. Overview of spare parts

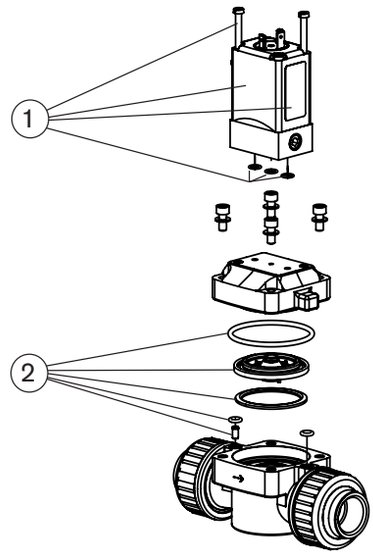

9. TRANSPORT, STORAGE, DISPOSAL

NOTE!

Transport damages!

Inadequately protected equipment may be damaged during transport.

- During transportation protect the device against wet and dirt in shock-resistant packaging.
- Avoid exceeding or dropping below the allowable storage temperature.
- Protect electrical interfaces of the coil and the pneumatic connections from damage with protective caps.

Incorrect storage may damage the device.

- Store the device in a dry and dust-free location!
- Storage temperature: -10 °C ... +50 °C (PVC)
  -10 °C ... +70 °C (PVDF).

Damage to the environment caused by device components contaminated with media.

- Observe applicable regulations on disposal and the environment.

english

MAN 1000010221 ML Version: F Status: RL (released | freigegeben) printed: 11.05.2016

1. DIE BEDIENUNGSANLEITUNG

Die Bedienungsanleitung enthält wichtige Informationen.

- Die Bedienungsanleitung sorgfältig lesen und Hinweise zur Sicherheit beachten.
- Anleitung muss jedem Benutzer zur Verfügung stehen.
- Die Haftung und Gewährleistung für Typ 0142 entfällt, wenn die Anweisungen der Bedienungsanleitung nicht beachtet werden.

2. DARSTELLUNGSMITTEL

→ markiert einen Arbeitsschritt den Sie ausführen müssen.

Warnung vor schweren oder tödlichen Verletzungen:

GEFAHR!
Bei unmittelbarer Gefahr.

WARNUNG!
Bei möglicher Gefahr.

Warnung vor leichten oder mittelschweren Verletzungen:

VORSICHT!

Warnung vor Sachschäden:

HINWEIS!

3. BESTIMMUNGSGEMÄSSER GEBRAUCH

Bei nicht bestimmungsgemäßem Einsatz des Magnetventils Typ 0142 können Gefahren für Personen, Anlagen in der Umgebung und die Umwelt entstehen.

- Das Gerät ist zum Steuern, Absperren und Dosieren von neutralen und aggressiven Medien bis zu einer Viskosität von 21 mm²/s konzipiert.
- Mit einer sachgemäß angeschlossenen und montierten Gerätesteckdose, z. B. Bürkert Typ 2508 erfüllt das Gerät die Schutzart IP65 nach DIN EN 60529 / IEC 60529.
- Für den Einsatz die in den Vertragsdokumenten und der Bedienungsanleitung spezifizierten zulässigen Daten, Betriebs- und Einsatzbedingungen beachten. Diese sind im Kapitel „Technische Daten“ beschrieben.
- Voraussetzungen für den sicheren und einwandfreien Betrieb sind sachgemäßer Transport, sachgemäße Lagerung und Installation sowie sorgfältige Bedienung und Instandhaltung.
- Das Gerät nur bestimmungsgemäß einsetzen.

3.1. Beschränkungen

Beachten Sie bei der Ausfuhr des Systems/Geräts gegebenenfalls bestehende Beschränkungen.

4. GRUNDLEGENDE SICHERHEITSHINWEISE

Diese Sicherheitshinweise berücksichtigen keine Zufälligkeiten und Ereignisse, die bei Montage, Betrieb und Wartung auftreten können.

Gefahr durch hohen Druck!

- Vor dem Lösen von Leitungen oder Ventilen den Druck abschalten und Leitungen entlüften.

Gefahr durch elektrische Spannung!

- Vor Eingriffen in das Gerät oder die Anlage, Spannung abschalten und vor Wiedereinschalten sichern!
- Die geltenden Unfallverhütungs- und Sicherheitsbestimmungen für elektrische Geräte beachten!

Verbrennungsgefahr/Brandgefahr bei Dauerbetrieb durch heiße Geräteoberfläche!

- Das Gerät von leicht brennbaren Stoffen und Medien fernhalten und nicht mit bloßen Händen berühren.

Verletzungsgefahr durch Funktionsausfall bei Ventilen mit Wechselspannung (AC)!

Festsitzender Kern bewirkt Spulenüberhitzung, die zu Funktionsausfall führt.

- Arbeitsprozess auf einwandfreie Funktion prüfen.

Kurzschlussgefahr/Austritt von Medium durch undichte Verschraubungen!

- Auf einwandfreien Sitz der Dichtung achten.
- Ventil und Anschlussleitungen sorgfältig verschrauben.

Zum Schutz vor Verletzungen/Sachschaden beachten:

- An Typ 0142 keine inneren oder äußeren Veränderungen vornehmen. Anlage/Gerät vor unbeabsichtigter Betätigung sichern.
- Installations- und Instandhaltungsarbeiten dürfen nur von autorisiertem Fachpersonal mit geeignetem Werkzeug ausgeführt werden.
- Nach einer Unterbrechung der elektrischen oder pneumatischen Versorgung ist ein definierter oder kontrollierter Wiederanlauf des Prozesses zu gewährleisten.
- Gehäuse nicht mechanisch belasten.
- Die allgemeinen Regeln der Technik einhalten.

5. TECHNISCHE DATEN

5.1. Betriebsbedingungen

Folgende Werte sind auf dem Typschild angegeben:

- Spannung (Toleranz ± 10 %) / Stromart
- Spulenleistung (Wirkleistung in W - betriebswarm)
- Druckbereich
- Gehäusewerkstoff
  PVC (PV) oder PVDF (PD)
- Dichtwerkstoff
  FKM, EPDM

Schutzart: IP65 nach DIN EN 60529 / IEC 60529 mit sachgemäß angeschlossener und montierter Gerätesteckdose, z. B. Bürkert Typ 2508

Wirkungsweise:

A (NC) 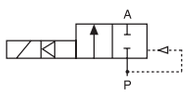

2/2-Wege Ventil, stromlos geschlossen

B (NO) 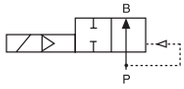

2/2-Wege Ventil, stromlos geöffnet

5.2. Einsatzbedingungen

Umgebungstemperatur: PVC 0 bis +40 °C
PVDF 0 bis +55 °C

Zulässige Mediumstemperatur in Abhängigkeit von Gehäusewerkstoff:

Gehäusewerkstoff	Mediumstemperatur
PVC	0 °C ... +50 °C
PVDF	0 °C ... +70 °C

Druck - Temperatur Diagramm für PVC und PVDF:

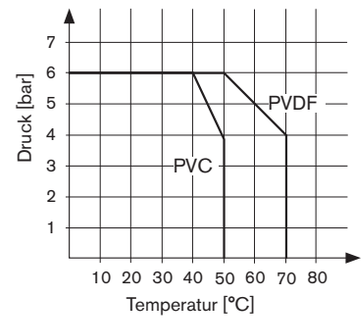

MAN 1000010221 ML Version: F Status: RL (released | freigegeben) printed: 11.05.2016

Zulässige Medien in Abhängigkeit von Dichtwerkstoff:

Dichtwerkstoff	Zulässige Medien
FKM	Oxidierende Säuren und Substanzen, Wasser
EPDM	Alkalien, alkalische Wasch- und Bleichlaugen, Wasser, öl- und fettfreie Medien

Betriebsdauer

Wenn auf dem Typschild nicht anders angegeben, ist das Magnetsystem für Dauerbetrieb geeignet.

Wichtiger Hinweis für die Funktionssicherheit bei Dauerbetrieb!
Bei langem Stillstand wird eine Mindestbetätigung von 1-2 Schaltungen pro Tag empfohlen.

Lebensdauer

Hohe Schaltfrequenz und hohe Drücke verringern die Lebensdauer.

5.3. Konformität

Das Magnetventil, Typ 0142 ist konform zu den EG-Richtlinien entsprechend der EG-Konformitätserklärung.

5.4. Normen

Die angewandten Normen, mit denen die Konformität mit den EG-Richtlinien nachgewiesen wird, sind in der EG-Baumusterprüfbescheinigung und/oder der EG-Konformitätserklärung nachzulesen.

5.5. Typschild

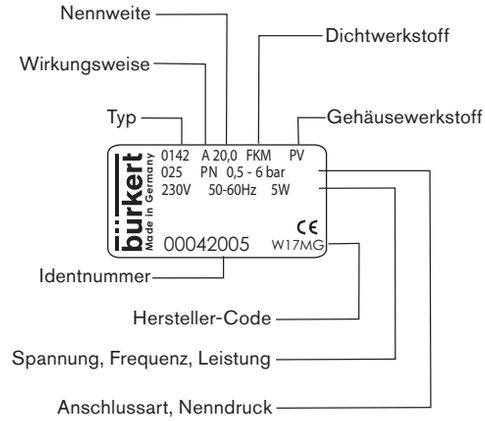

deutsch

6. MONTAGE

6.1. Sicherheitshinweise

GEFAHR!

Verletzungsgefahr durch hohen Druck in der Anlage!
- Vor dem Lösen von Leitungen oder Ventilen den Druck abschalten und Leitungen entlüften.

Verletzungsgefahr durch Stromschlag!
- Vor Eingriffen in das Gerät oder die Anlage, Spannung abschalten und vor Wiedereinschalten sichern!
- Die geltenden Unfallverhütungs- und Sicherheitsbestimmungen für elektrische Geräte beachten!

WARNUNG!

Verletzungsgefahr bei unsachgemäßer Montage!
- Die Montage darf nur autorisiertes Fachpersonal mit geeignetem Werkzeug durchführen!

Verletzungsgefahr durch ungewolltes Einschalten der Anlage und unkontrollierten Wiederanlauf!
- Anlage vor unbeabsichtigtem Betätigen sichern.
- Nach der Montage einen kontrollierten Wiederanlauf gewährleisten.

6.2. Vor dem Einbau

Einbaulage: beliebig, vorzugsweise Antrieb oben.

Vorgehensweise:

→ Rohrleitungen von eventuellen Verschmutzungen säubern.

→ Vor dem Ventileingang einen Schmutzfilter einbauen (≤ 500 µm).

6.3. Einbau

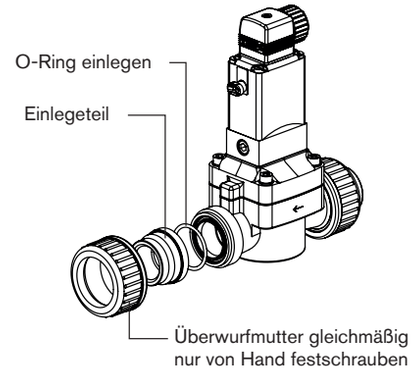

HINWEIS!

Vorsicht Bruchgefahr!
- Spule nicht als Hebelarm benutzen.

→ Gehäuse mit Schweißmuffe: PVDF verwenden.

→ Gehäuse mit Klebemuffen: Tangit Spezialkleber verwenden.

Ventilgehäuse darf nicht verspannt eingebaut werden.

→ Durchflussrichtung beachten:
Der Pfeil auf dem Gehäuse kennzeichnet die Durchflussrichtung (keine Funktion in entgegengesetzter Durchflussrichtung).

6.4. Handnotbetätigung

VORSICHT!

Mediumsaustritt durch Verlust der O-Ringe!
- Verlust der O-Ringe führt zur Undichtheit des Ventils. Medium kann austreten!

HINWEIS!

Vorsicht!
- Bei arretierter Handnotbetätigung kann das Ventil elektrisch nicht mehr betätigt werden.

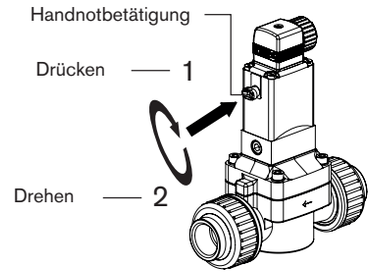

6.5. Elektrischer Anschluss der Gerätesteckdose

WARNUNG

Verletzungsgefahr durch Stromschlag!
- Vor Eingriffen in das System die elektrische Spannung abschalten und vor Wiedereinschalten sichern!
- Die geltenden Unfallverhütungs- und Sicherheitsbestimmungen für elektrische Geräte beachten!

Bei fehlendem Schutzleiterkontakt zwischen Spule und Gehäuse besteht die Gefahr des Stromschlags!
- Schutzleiter immer anschließen.
- Elektrischer Durchgang zwischen Spule und Gehäuse prüfen.

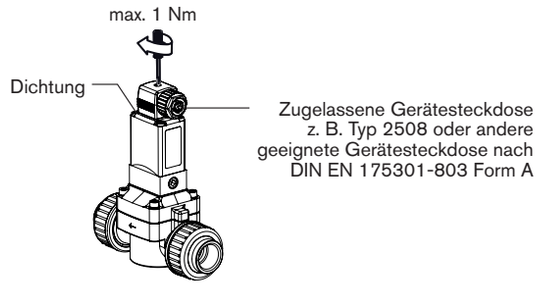

Spannung und Stromart laut Typschild beachten.

Vorgehensweise:

→ Gerätesteckdose (zugelassene Typen siehe Datenblatt) festschrauben, dabei maximalen Drehmoment 1 Nm beachten.

→ Korrekten Sitz der Dichtung überprüfen.

→ Schutzleiter anschließen und elektrischer Durchgang zwischen Spule und Gehäuse prüfen.

6.5.1. Elektrischer Anschluss - Impuls

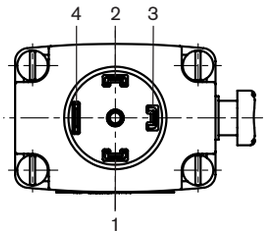

Anschlüsse bei DC:
Klemme 1 = zu +
Klemme 2 = auf +
Klemme 3 = GND -
Schutzleiteranschluss

Die Anschlussklemmen in der Gerätesteckdose sind entsprechend den Klemmen am Ventil mit den Ziffern 1 bis 3 gekennzeichnet.

Vorgehensweise:

→ Impulsventile (variable code CF 02) anschließen.

→ Bei Gleichspannungsausführungen Minuspol an Klemme 3 anschließen.

HINWEIS!

Wichtige Hinweise:
- Gleichzeitige Impulsgabe auf beide Spulenwicklungen vermeiden.
- Parallel zu den Klemmen dürfen keine weiteren Verbraucher (Relais und dergl.) geschaltet werden.
- Der jeweils nicht spannungsbeaufschlagte Spulenanschluss muss galvanisch getrennt (offen) sein.
- Sollten zwei oder mehr Ventile parallel geschaltet werden, ist durch Verwendung von 2- oder mehrpoligen Schaltern sicherzustellen, dass diese Forderung erfüllt ist.

7. WARTUNG, FEHLERBEHEBUNG

7.1. Sicherheitshinweise

WARNUNG!

Verletzungsgefahr bei unsachgemäßen Wartungsarbeiten!
- Die Wartung darf nur autorisiertes Fachpersonal mit geeignetem Werkzeug durchführen!

Verletzungsgefahr durch ungewolltes Einschalten der Anlage und unkontrollierten Wiederanlauf!
- Anlage vor unbeabsichtigtem Betätigen sichern.
- Nach der Wartung einen kontrollierten Wiederanlauf gewährleisten.

deutsch

7.2. Störungen

Bei Störungen überprüfen ob:

→ das Gerät vorschriftsmäßig installiert ist,

→ der elektrische und fluidische Anschluss ordnungsgemäß ausgeführt ist,

→ das Gerät nicht beschädigt ist,

→ alle Schrauben fest angezogen sind,

→ Spannung und Druck anliegen,

→ die Rohrleitungen schmutzfrei sind.

Ventil schaltet nicht

Mögliche Ursache:
- Kurzschluss oder Spulenunterbrechung,
- Mediumsdruck außerhalb das zulässigen Druckbereichs,
- Handnotbetätigung arretiert.

Ventil schließt nicht

Mögliche Ursache:
- Innenraum des Ventils verschmutzt,
- Handnotbetätigung arretiert,
- Drossel (Ventileingang) bzw. Vorsteuerbohrungen (Ventil- Eingang / Ausgang) verschmutzt.

deutsch

8. ERSATZTEILE

VORSICHT!

Verletzungsgefahr, Sachschäden durch falsche Teile!

Falsches Zubehör und ungeeignete Ersatzteile können Verletzungen und Schäden am Gerät und dessen Umgebung verursachen.
- Nur Originalzubehör sowie Originalersatzteile der Firma Bürkert verwenden.

8.1. Ersatzteile bestellen

Bestellen Sie die Ersatzteilsätze unter Angabe der Positionen (Pos. 1: Vorsteuersatz, Pos. 2: Verschleißteilsatz) und der Identnummer des Geräts.

MAN 1000010221 ML Version: F Status: RL (released | freigegeben) printed: 11.05.2016

8.2. Übersicht Ersatzteile

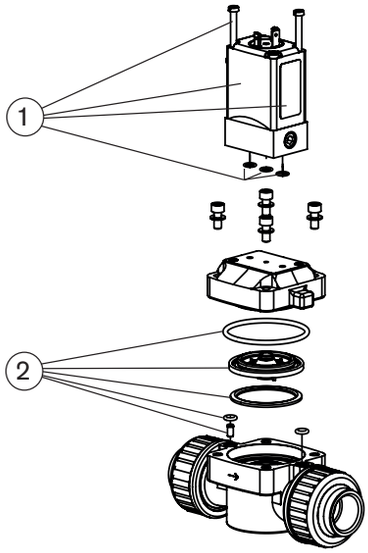

9. TRANSPORT, LAGERUNG, ENTSORGUNG

HINWEIS!

Transportschäden!

Unzureichend geschützte Geräte können durch den Transport beschädigt werden.

- Gerät vor Nässe und Schmutz geschützt in einer stoßfesten Verpackung transportieren.
- Eine Über- bzw. Unterschreitung der zulässigen Lagertemperatur vermeiden.
- Elektrische Schnittstellen der Spule und die pneumatischen Anschlüsse mit Schutzkappen vor Beschädigungen schützen.

Falsche Lagerung kann Schäden am Gerät verursachen.

- Gerät trocken und staubfrei lagern!
- Lagertemperatur. -10 °C ... +50 °C (PVC)
  -10 °C ... +70 °C (PVDF).

Umweltschäden durch von Medien kontaminierte Geräteteile.

- Gerät und Verpackung umweltgerecht entsorgen!
- Geltende Entsorgungsvorschriften und Umweltbestimmungen einhalten.

MAN 1000010221 ML Version: F Status: RL (released | freigegeben) printed: 11.05.2016

1. MANUEL D'UTILISATION

Manuel d'utilisation contiennent des informations importantes.

- Lire attentivement ce manuel et respecter les consignes de sécurité.
- Le manuel doit être à disposition de chaque utilisateur.
- Nous déclinons toute responsabilité et n'accordons aucune garantie légale pour le type 0142 en cas de non-respect des instructions figurant dans ce manuel d'utilisation.

2. SYMBOLES

→ identifie une opération que vous effectuer.

Mise en garde contre les blessures graves ou mortelles :

DANGER !
En cas de danger imminent.

AVERTISSEMENT !
En cas de danger possible.

Mise en garde contre les blessures légères ou moyennement graves :

PRUDENCE !

Met en garde contre des dommages matériels :

REMARQUE !

3. UTILISATION CONFORME

L'utilisation non-conforme du type 0142 peut présenter des dangers pour les personnes, les installations avoisinantes et l'environnement.

- L'appareil est conçu pour commander, arrêter et doser des fluides neutres et agressive jusqu'à une viscosité de 21 mm²/s.
- Avec une un connecteur adéquat, par ex. le type 2508 de Bürkert, connectée et montée de manière conforme, l'appareil est conforme au type de protection IP65 selon DIN EN 60529 / IEC 60529.
- Lors de l'utilisation, il convient de respecter les données et conditions d'utilisation et d'exploitation admissibles spécifiées dans les instructions de service et dans les documents contractuels. Celles-ci sont décrites au chapitre « Caractéristiques techniques ».
- Les conditions pour l'utilisation sûre et parfaite sont un transport, un stockage et une installation dans les règles ainsi qu'une parfaite utilisation et maintenance.
- Veillez à ce que l'utilisation de l'appareil soit toujours conforme.

3.1. Limitations

Lors de l'exportation du système/de l'appareil, veuillez respecter les limitations éventuelles existantes.

4. CONSIGNES DE SÉCURITÉ FONDAMENTALES

Ces consignes de sécurité ne tiennent pas compte des hasards et des événements pouvant survenir lors du montage, de l'exploitation et de l'entretien.

Danger dû à la haute pression.

- Avant de desserrer les conduites et les vannes, coupez la pression et purgez l'air des conduites.

Danger présenté par la tension électrique.

- Avant d'intervenir dans le système, coupez la tension et empêchez toute remise sous tension par inadvertance.
- Veuillez respecter les réglementations en vigueur pour les appareils électriques en matière de prévention des accidents ainsi qu'en matière de sécurité.

Risque de brûlures/d'incendie en fonctionnement continu dû à des surfaces d'appareils brûlantes.

- Tenez les substances et les fluides facilement inflammables à l'écart de l'appareil et ne touchez pas ce dernier à mains nues.

Risque de blessure dû à une panne pour les vannes avec tension alternative (AC).

Un noyau bloqué provoque la surchauffe de la bobine et donc une panne.

- Surveiller le bon fonctionnement du processus de travail.

Risque de court-circuit / de sortie du fluide en présence de vissages non étanches.

- Veiller à l'installation correcte des joints.
- Visser soigneusement la vanne et les raccords de la tuyauterie.

Pour prévenir les blessures, respectez ce qui suit :

- N'apportez pas de modifications à l'extérieur du corps de l'appareil. L'installation ne peut pas être actionnée par inadvertance.
- Les travaux d'installation et de maintenance doivent être effectués uniquement par des techniciens qualifiés et habilités disposant de l'outillage approprié.
- Après une interruption de l'alimentation électrique ou pneumatique, un redémarrage défini ou contrôlé du processus doit être garanti.
- L'appareil doit être utilisé uniquement en parfait état et en respectant les instructions de service.
- Ne soumettez pas le corps à des contraintes mécaniques.
- Les règles générales de la technique sont d'application pour planifier l'utilisation et utiliser l'appareil.

français

5. CARACTÉRISTIQUES TECHNIQUES

5.1. Conditions d'exploitation

Les valeurs sont indiquées sur la plaque signalétique :

- Tension (Tolérance ± 10 %) / Type de courant
- Puissance de bobine (puissance active en W - à l'état chaud)
- Plaque de pression
- Matériau du corps
  PVC (PV) ou PVDF (PD)
- Matériau du joint
  FKM, EPDM

Type de protection : IP65 selon DIN EN 60529 / IEC 60529 avec une connecteur, par le type 2508 de Bürkert

Fonction vanne :

français

A (NC)

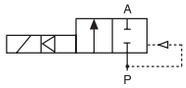

Électrovanne 2/2, normalement fermée

B (NO)

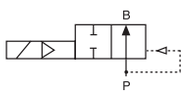

Électrovanne 2/2, normalement ouverte

5.2. Conditions d'utilisation

Température ambiante : PVC 0 - +40 °C
PVDF 0 - +55 °C

Température admissible du fluide en fonction de la matériau du corps :

Matériau du corps	Température du fluide
PVC	0 °C ... +50 °C
PVDF	0 °C ... +70 °C

Pression - Température Diagramme pour PVC et PVDF:

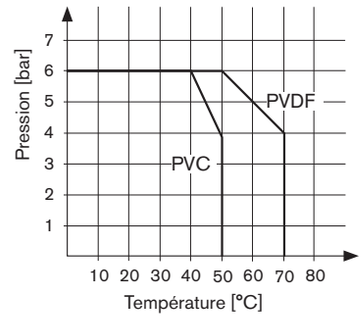

MAN 1000010221 ML Version: F Status: RL (released | freigegeben) printed: 11.05.2016

Fluides utilisables en fonction du matériau du joint :

Matériau du joint	Fluides admissibles
FKM	Acides et autres substances oxydantes, eau
EPDM	Alcalis, lessives alcalines et de blanchiment, eau, fluides d'huile et de graisse

Durée de fonctionnement

Si aucune information contraire ne figure sur la plaque signalétique, le système magnétique est adapté à un fonctionnement continu.

Remarque importante pour la sécurité de fonctionnement lors d'un fonctionnement continu !
Dans le cas d'un fonctionnement de longue durée, il est recommandé de procéder à 1 - 2 commutations minimum par jour.

Durée de vie

Une fréquence élevée de commutation ainsi que des pressions élevées réduisent la durée de vie.

5.3. Conformité

L'électrovanne type 0142 est conforme aux directives CE sur la base de la déclaration de conformité CE.

5.4. Normes

Les normes appliquées justifiant la conformité aux directives CE peuvent être consultées dans le certificat d'essai de modelé type CE et / ou la déclaration de Conformité CE.

5.5. Plaque signalétique

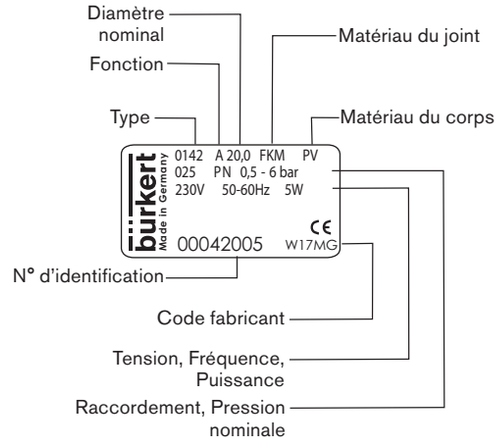

français

6. INSTALLATION

6.1. Consignes de sécurité

DANGER !

Risque de blessures dû à la présence de haute pression dans l'installation.
- Avant de desserrer les conduites et les vannes, coupez la pression et purgez l'air des conduites.

Risque de choc électrique.
- Avant d'intervenir dans le système, coupez la tension et empêchez toute remise sous tension par inadvertance !
- Veuillez respecter les réglementations en vigueur pour les appareils électriques en matière de prévention des accidents ainsi qu'en matière de sécurité !

AVERTISSEMENT !

Risque de blessures dû à un montage non conforme.
- Le montage doit être effectué uniquement par un personnel qualifié et habilité disposant de l'outillage approprié.

Risque de blessures dû à la mise en marche involontaire de l'installation et le redémarrage non contrôlé.
- Empêchez tout actionnement involontaire de l'installation.
- Garantissez un redémarrage contrôlé après le montage.

6.2. Avant le montage

Position de montage : au choix, de préférence avec l'actionneur vers le haut.

Procédure:

→ Contrôler les tuyauteries pour encrassements et les nettoyer.

→ Installer un filtre à saleté devant l'entrée de vanne (≤ 500 µm).

6.3. Installation

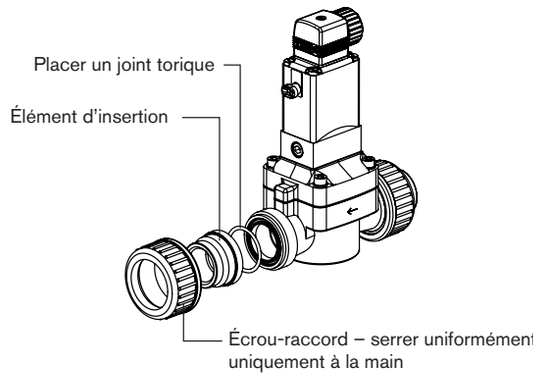

REMARQUE !

Attention risque de rupture.
- La bobine ne doit pas être utilisée comme levier.

→ Corps avec manchon de soudage : utiliser du PVDF.

→ Corps avec manchons à coller : Utiliser la colle spéciale Tangit.

Le corps de vanne ne doit pas être monté sous tension.

→ Respectez le sens du débit :
La flèche sur le corps indique le sens du débit (Aucun fonctionnement dans le sens de débit inverse).

6.4. Actionnement manuel d'urgence

ATTENTION !

Sortie de fluide due à la perte des joints toriques.
- La perte des joints toriques rend la vanne non étanche. Risque de sortie de fluide !

REMARQUE !

Attention.
- Lorsque l'actionnement manuel d'urgence est bloqué, l'actionnement électrique de la vanne n'est plus possible.

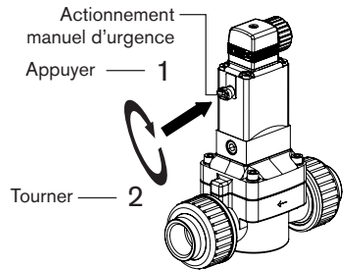

MAN 1000010221 ML Version: F Status: RL (released | freigegeben) printed: 11.05.2016

6.5. Raccordement électrique de la connecteur

AVERTISSEMENT !

Risque de choc électrique.

- Avant d'intervenir dans le système, coupez la tension et empêchez toute remise sous tension par inadvertance.
- Veuillez respecter les réglementations en vigueur pour les appareils électriques en matière de prévention des accidents ainsi qu'en matière de sécurité.

Il y a risque de choc électrique en l'absence d'un contact du conducteur de protection entre la bobine et le corps.

- Raccordez toujours la prise de terre et contrôlez le passage du courant entre la bobine et le corps.

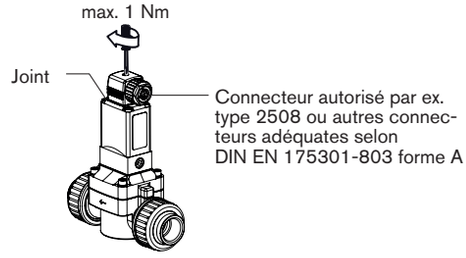

Respectez la tension et le type de courant selon la plaque signalétique.

Procédure :

→ Visser le connecteur (types admissibles, voir fiche technique) en respectant le couple max. de 1 Nm.

→ Vérifier le bon positionnement du joint.

→ Raccorder la prise de terre de protection et vérifier le passage électrique entre la bobine et le corps.

6.5.1. Raccordement électrique - impulsion

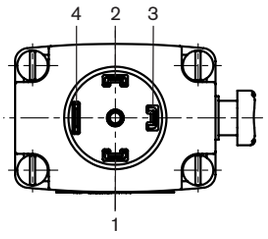

Raccords pour DC :
Borne 1 = fermé +
Borne 2 = ouvert +
Borne 3 = GND -
Raccord du conducteur de protection

Les bornes de raccordement dans la connecteur sont identifiées par les chiffres 1 à 3 conformément aux bornes de la vanne.

Procédure :

→ Raccorder les vannes à impulsions (code variable CF 02).

→ Pour les versions à tension continue, raccorder le pôle négatif à la borne 3.

REMARQUE !

Remarques importantes :

- Éviter de donner des impulsions simultanément sur les deux enroulements de bobine.
- Aucun autre consommateur ne doit être activé en parallèle avec les bornes (relais et semblables).
- Le raccord de bobine auquel aucune tension n'est appliquée doit être isolé électriquement (ouvert).
- En cas de montage en parallèle de deux ou plusieurs vannes, il convient de garantir le respect de cette exigence par l'utilisation d'interrupteurs bipolaires ou multipolaires.

7. MAINTENANCE, DÉPANNAGE

7.1. Consignes de sécurité

AVERTISSEMENT !

Risque de blessures dû à des travaux de maintenance non conformes.

- La maintenance doit être effectué uniquement par un personnel qualifié et habilité disposant de l'outillage approprié.

Risque de blessures dû à la mise en marche involontaire de l'installation et le redémarrage non contrôlé.

- Empêchez tout actionnement involontaire de l'installation.
- Garantissez un redémarrage contrôlé après la maintenance.

7.2. Pannes

En présence de pannes, vérifiez :

→ si l'appareil est installé dans les règles,

→ si le raccord électrique et fluide est correct,

→ si l'appareil n'est pas endommagé,

→ si toutes les vis sont bien serrées,

→ si la tension et la pression sont disponibles,

→ si les tuyauteries sont propres.

français

La vanne ne s'enclenche pas

Cause possible :

- Court-circuit ou coupure de la bobine.
- Pression du fluide hors de la plage de pression autorisée.
- Actionnement manuel d'urgence bloqué.

La vanne ne se ferme pas

Cause possible :

- Intérieur de la vanne encrassé.
- Actionnement manuel d'urgence bloqué.
- Étranglement (entrée de vanne) ou orifices de pilotage (entrée / sortie de vanne) encrassés.

8. PIÈCES DE RECHANGE

PRUDENCE !

Risque de blessures, de dommages matériels dus à de mauvaises pièces.

De mauvais accessoires ou des pièces de rechange inadaptées peuvent provoquer des blessures et endommager l'appareil ou son environnement.

- Utilisez uniquement des accessoires ainsi que des pièces de rechange d'origine de la société Bürkert.

8.1. Commander des pièces de rechange

Commandez les jeux de pièces de rechange avec mention des postes (pos. 1 : jeu pilote, pos. 2 : jeu de pièces d'usure) et le numéro d'identification de l'appareil.

français

MAN 1000010221 ML Version: F Status: RL (released | freigegeben) printed: 11.05.2016

8.2. Vue d'ensemble des pièces de rechange

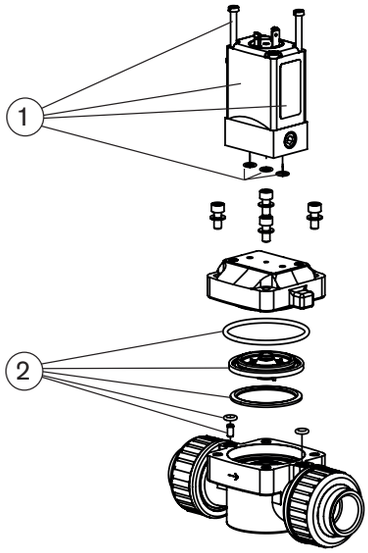

9. TRANSPORT, STOCKAGE, ÉLIMINATION

REMARQUE !

Dommages dus au transport.

Les appareils insuffisamment protégés peuvent être endommagés pendant le transport.

- Transportez l'appareil à l'abri de l'humidité et des impuretés et dans un emballage résistant aux chocs.
- Évitez le dépassement vers le haut ou le bas de la température de stockage admissible.
- Protéger les interfaces électriques de la bobine et les raccordements pneumatiques des détériorations à l'aide des capuchons de protection.

Un mauvais stockage peut endommager l'appareil.

- Stockez l'appareil au sec et à l'abri des poussières !
- Température de stockage : -10 °C ... +50 °C (PVC)
  -10 °C ... +70 °C (PVDF).

Dommages à l'environnement causés par des pièces d'appareil contaminées par des fluides.

- Respectez les prescriptions en matière d'élimination des déchets et de protection de l'environnement en vigueur.

MAN 1000010221 ML Version: F Status: RL (released | freigegeben) printed: 11.05.2016

CHEMLINE – BACKPRESSURE RELIEF VALVES

CHEMLINE Plastics Limited

Your Pipeline To Quality Valves, Strainers, Flowmeters and Controls

55 Guardsman Road
Thornhill, Ontario
L3T 6L2
Canada
Tel: 905-889-7890
Fax: 905-889-8553

MAINTENANCE INSTRUCTIONS
For Chemline 3/8" - 1-1/2" SB Series Pressure Relief Valves

Installation:

1. Always mount a filter or strainer in the line immediately before the valve to avoid damage to the valve from dirt or particles. Valve is spring operated, therefore can be installed in any orientation.

2. **To adjust pressure use the adjustment screw (8) and a pressure gauge**.
   - the valve will be closed at the set pressure and will start to open when the operating pressure rises above the set pressure.
   - connect the compressed air supply to the inlet of the valve. Adjust the flow of the air to the desired set pressure by turning clockwise to increase the set pressure, counterclockwise to decrease it.
   - with the valve being closed, adjust the screw (8) until the valve starts to open. Fix the adjusting screw in place with the locking nut (9).

3. For installation in an application where the temperature is 0° C or less. Check with Chemline Engineering
   Technical staff prior to installation.

Maintenance

Refer to **ASSEMBLY DRAWING SB10/11 rev 0.** And proceed as follows.

1. Loosen and remove cap (10).

2. Loosen counter nut (9) and remove adjustment screw (8).

3. Remove body cap (12a), body bolt (12b), body nut (12c) and washer (12d).

4. Lift up and remove bonnet (2).

5. Remove pressure plate (7a) and ball bearing (7b) to reach relief spring (3).

6. Loosen piston screw (11), remove spring plate (6) and draw piston assembly (5) downward and out of body (1).
   Note: Piston assembly (5) is all parts (5a) outer piston assembly
   (5b) inner piston assembly
   (5c) seat
   (5d) piston o-ring

CHEMLINE Plastics Limited

Your Pipeline To Quality Valves, Strainers, Flowmeters and Controls

55 Guardsman Road
Thornhill, Ontario
L3T 6L2
Canada
Tel: 905-889-7890
Fax: 905-889-8553

MAINTENANCE & INSTALLATION INSTRUCTIONS
For Chemline 2" – 4" SB Series Pressure Relief Valves

Installation:

1. Always mount a filter or strainer in the line immediately before the valve to avoid damage to the valve from dirt or particles. Valve is spring operated, therefore can be installed in any orientation.

2. **To adjust pressure use the adjustment screw (8) and a pressure gauge**.
   - the valve will be closed at the set pressure and will start to open when the operating pressure rises above the set pressure.
   - connect the compressed air supply to the inlet of the valve. Adjust the flow of the air to the desired set pressure by turning clockwise to increase the set pressure, counterclockwise to decrease it.
   - with the valve being closed, adjust the screw (8) until the valve starts to open. Fix the adjusting screw in place with the locking nut (9).

3. For installation in an application where the temperature is 0° C or less. Check with Chemline Engineering
   Technical staff prior to installation.

Maintenance:

Refer to **ASEMBLY DRAWING SB1201 rev 0.** And proceed as follows:

1. Loosen and remove cap (10).

2. Loosen counter nut (9) and remove adjustment screw (8).

3. Remove body cap (12c), body nut and bolt (12a) and washer (12b).

4. Lift up and remove bonnet (2).

5. Remove pressure plate (7a) and ball bearing (7b) to reach relief spring (3).

6. Draw piston assembly (5) downward and out of body (1).
   Note: Piston assembly (5) is all parts (5a) outer piston assembly
   (5b) plug
   (5c) seat
   Piston assembly is removed from the body as a unit. It can then be further disassembled into the component parts listed above.

7. Remove diaphragm (4).

8. Remove seal (14) at intermediate flange (13).

9. Inspect all parts for wear and abrasion, replace seals, diaphragms etc. if necessary.

10. To re-assemble valve follow steps 1 through 10 in reverse order.

TROUBLESHOOTING

FAILURE		REASON	REPAIR
VALVE LEAKS AT DIAPHGRAM (4)		CLAMPING PRESSURE FOR DIAPHRAGM (4) TOO LOW.	TIGHTEN SCREWS (12)
PRESSURE RISES ABOVE SET PRESSURE	{A)	VALVE SEAT (5c) & SEALS (14) ARE	CHECK SEALS OF PISTON (5) BODY (14) - REPLACE
	(B)	DEFECTIVE DIAPHRAGM (4) LEAKING	REPLACE.
	(C)	PISTON (5) BORE AT BODY (1) DIRTY	DISMANTLE PISTON (5) AND CLEAN BORE
VALVE CLOSED (DOES NOT OPEN)		VALVE MOUNTED IN WRONG DIRECTION.	TURN VALVE IN DIRECTION OF ARROWS
FLUIDS PENETRATE ADJUSTING SCREW (8)		DIAPHRAGM (4) DEFECTIVE.	REPLACE DIAPHRAGM (4)
LEAKING AT PLUG AT VALVE BODY		O-RING SEAL LEAKING	DISMANTLE PLUG AND REPLACE SEAL

PART	DESCRIPTION	PCS
1	BODY	1
2	BONNET	1
3	RELIEF SPRING	1
4	DIAPHRAGM	1
5 (a)	OUTER PISTON	1
5 (b)	PLUG	1
5 (c)	SEAT	2
6	SPRING PLATE	1
7 (a)	PRESSURE PLATE	1
7 (b)	BALL BEARING	1
8	ADJUSTING SCREW	1
9	COUNTER NUT	1
10	CAP	1
12 (a)	BODY NUT & BOLT	4/6
12 (b)	BODY WASHER	4/6
12 (c)	BODY CAP	4/6
13	INTERMED. FLANGE	2
14	SEAL	2

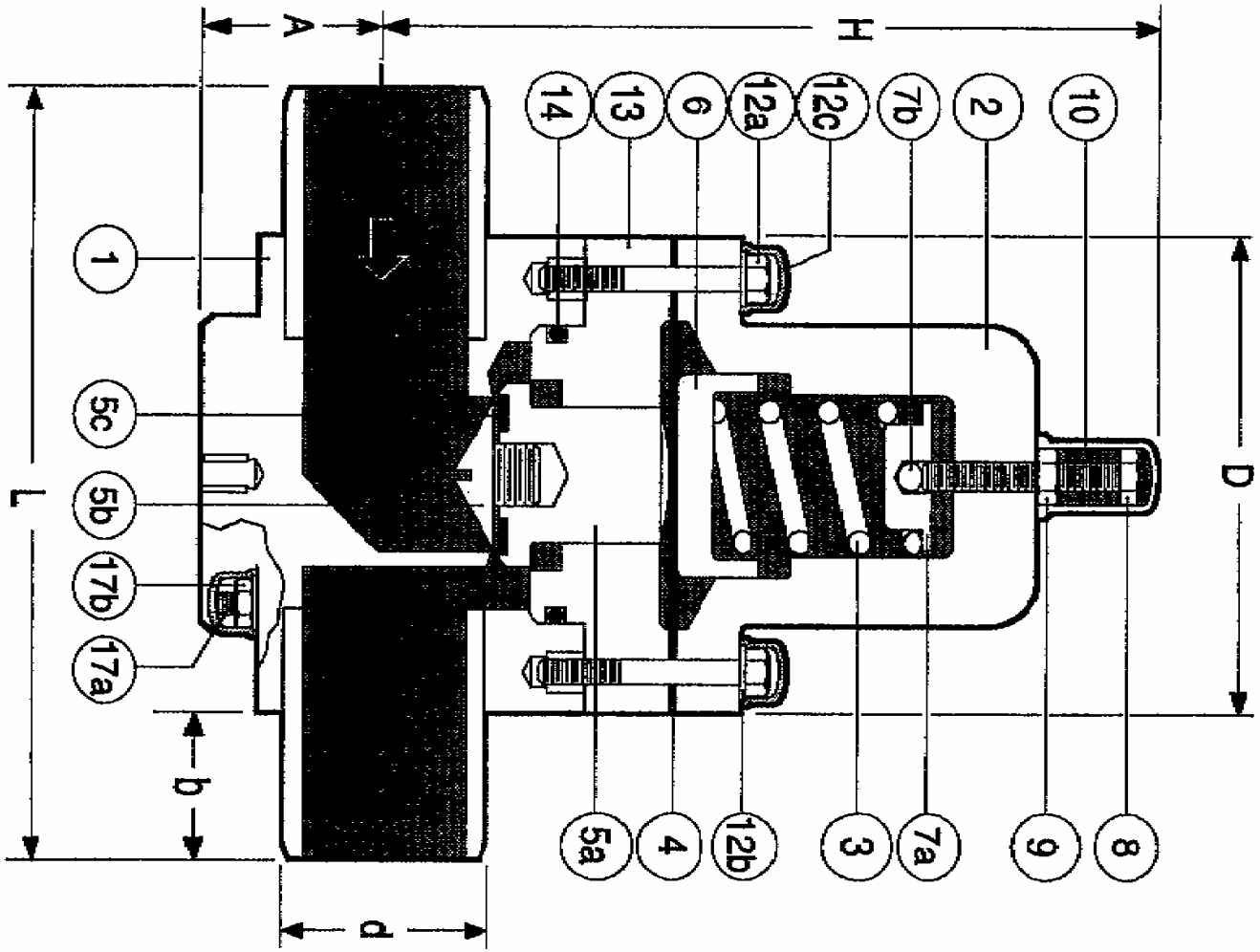

TITLE: CHEMLINE SB/12 SERIES	SCALE		DATE	CHEMLINE PLASTICS	
	DR. BY				
REFERENCE: PRESSURE RELIEF VALVES 2-4"	CHKD. BY			DWG. NO. SB1201	REV. 0
	APP. BY				

Piston assembly is removed from body as a unit. It can then be further disassembled into the component parts listed above.

7 Remove diaphragm (4).

8. Remove seal (14) at intermediate flange (13).

9. Inspect all parts for wear and abrasion, replace seals, diaphragm etc. if necessary.

10. To re-assemble valve follow steps 1 through 9 in reverse order.

TROUBLESHOOTING

FAILURE		REASON	REPAIR
VALVE LEAKS AT DIAPHGRAM (4)		CLAMPING PRESSURE FOR DIAPHRAGM (4) TOO LOW.	TIGHTEN SCREWS (12)
PRESSURE RISES ABOVE SET PRESSURE	{A)	VALVE SEAT (5c) & SEALS (14) & (5d) ARE	CHECK SEALS OF PISTON (5) BODY (14) - REPLACE
	(B)	DEFECTIVE DIAPHRAGM (4) LEAKING	REPLACE.
	(C)	PISTON (5) BORE AT BODY (1) DIRTY	DISMANTLE PISTON (5) AND CLEAN BORE
VALVE CLOSED (DOES NOT OPEN)		VALVE MOUNTED IN WRONG DIRECTION.	TURN VALVE IN DIRECTION OF ARROWS
FLUIDS PENETRATE ADJUSTING SCREW (8)		DIAPHRAGM (4) DEFECTIVE.	REPLACE DIAPHRAGM (4)
LEAKING AT PLUG AT VALVE BODY		O-RING SEAL LEAKING	DISMANTLE PLUG AND REPLACE SEAL

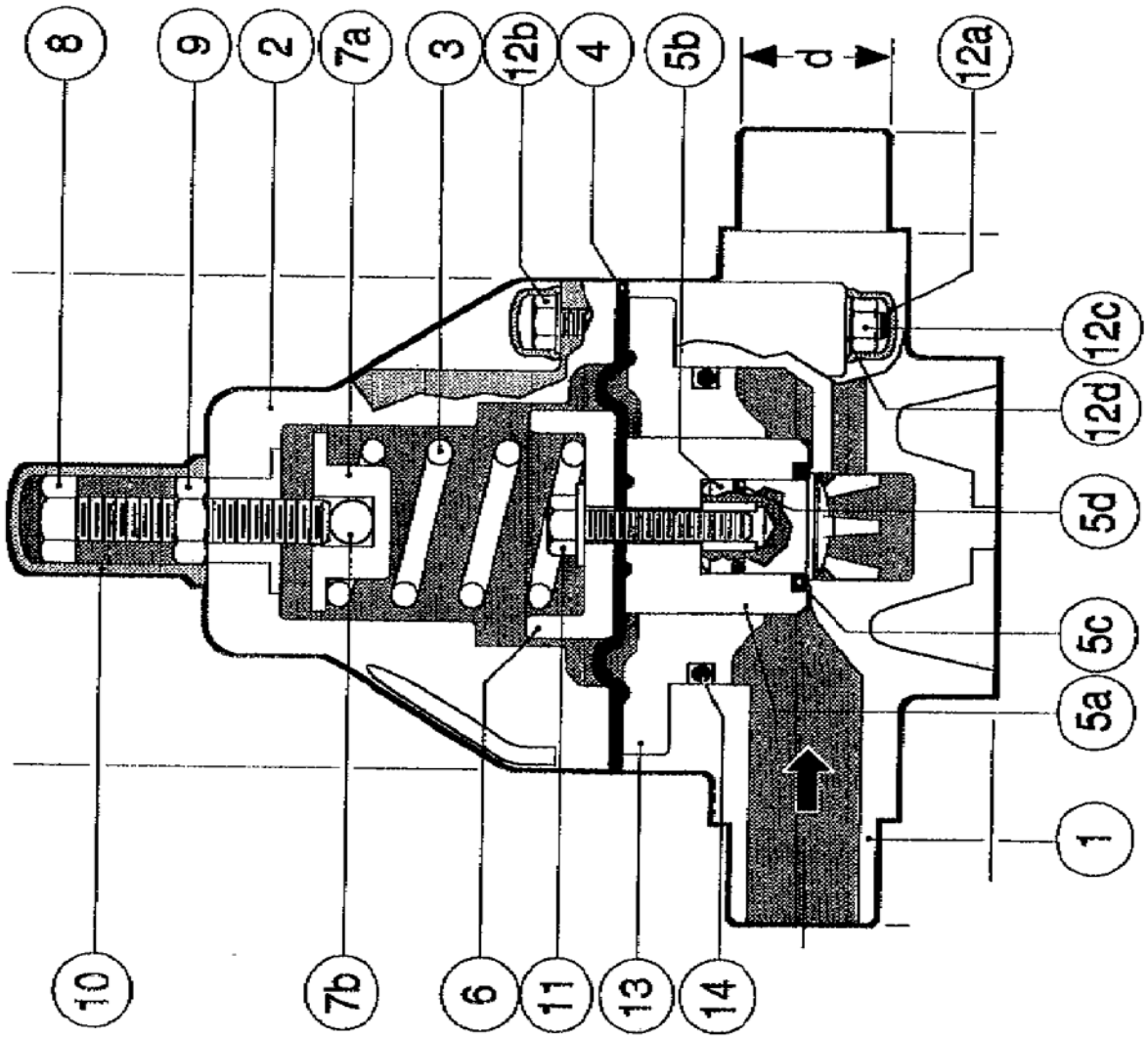

Part	Description	Pcs
1	BODY	1
2	BONNET	1
3	RELIEF SPRING	1
4	DIAPHRAGM	1
5(a)	OUTER PISTON	1
	(PART OF ASSY)	
5(b)	INNER PISTON	1
	(PART OF ASSY)	
5(c)	SEAT	2
	(PART OF ASSY)	
5(d)	PISTON O-RING	2
	(PART OF ASSY)	
6	SPRING PLATE	1
7(a)	PRESS. PLATE	1
7(b)	BALL BEARING	1
8	ADJ. SCREW	1
9	COUNTER NUT	1
10	CAP	1
11	PISTON SCREW	1
12 (a)	BODY CAP	4/6
12 (b)	BODY BOLT	4/6
12 (c)	BODY NUT	4/6
12 (d)	BODY WASHER	4/6
13	INT. FLANGE	2
14	SEAL	2

TITLE: CHEMLINE SB PRESSURE RELIEF VALVES	SCALE		DATE	CHEMLINE PLASTICS
	DR. BY			
REFERENCE: 3/8" - 1-1/2"	CHKD. BY			DWG. NO. SB1011
	APP. BY			REV. 0

CHEMLINE – BALL VALVES

CHEMLINE Plastics Limited

Your Pipeline To Quality Valves, Strainers, Flowmeters and Controls

55 Guardsman Road
Thornhill, Ontario
L3T 6L2
Canada
Tel: 905-889-7890
Fax: 905-889-8553

MAINTENANCE & INSTALLATION INSTRUCTIONS
For Chemline Type 21 True Union Ball Valve Size 1/2"- 4"

Installation:

1. Make sure all surfaces are clear and free of debris prior to installing valve in pipeline. Pipeline should be empty at connection site.

2. Valve should be set to the closed position.

3. When installing valves with socket connections, ensure that only PVC solvent cement is used. Excessive use of cement can cause sticking in the valve interior, therefore use caution when applying cement, especially on vertical piping.

4. For threaded connections we recommend the use of sealing tape and, with the use of a strap wrench, to tighten no more than 2 full turns past finger-tight. Use of a pipe wrench can deform the pipe or union nut and cause damage to the valve and/or connection(s).

5. Flanged connections should be torqued evenly and in a symmetrical pattern with a torque wrench and as per the figure and chart below:

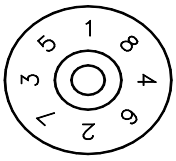

RECOMMENDED FLANGE BOLT TORQUES

VALVE SIZE	FLANGE	BOLT TORQUE	IN FT-LB	AXIAL MISALIGNMENT	PARALLELISM (INCH)
	PSI - 50	PSI - 100	PSI – 150		
1½	11	13	14	0.04	0.03
2	13	14	16	0.04	0.03
2½	13	14	16	0.04	0.03
3	18	20	22	0.04	0.03
4	20	20	22	0.04	0.04
5	22	15	29	0.04	0.04
6	25	15	32	0.04	0.04
8	25	32	40	0.06	0.04
10	25	32	40	0.06	0.04
12	29	36	43	0.06	0.04
14	32	36	43	0.06	0.04
16	36	[58-85 PSI]	58	0.06	0.04
18	36	[58-85 PSI]	-		
20	72	-	-		
24	72	-	-		

Maintenance Instructions Type 21 Ball Valve cont.

Maintenance:

Refer to **ASSEMBLY DRAWING T21V Rev. 0.** And proceed as follows:

1. Turn valve to the closed position.
2. Unscrew union nut (5) from both ends of valve.
3. Remove end connectors (4).
4. On solid mold end, remove face o-ring (9). This completely disassembles this end of valve.
5. Pull upward on handle (7) to remove.
6. On opposite end of valve, remove face o-ring (9) and use handle (7) as a spanner wrench to remove carrier (3).
7. Remove carrier o-ring (10).
8. Remove seat (6) and seat cushion (12) to expose ball (2).
9. Remove ball (2) by pushing from solid molded end of body.
10. Remove stem (6) by pushing it down into body (1).
11. Remove stem o-rings 11(A) and 11(B) from groves in stem.
12. Remove other seat (6) and seat cushion (12).
13. Inspect all parts for wear and replace as necessary.
14. Before re-assembling valve, lubricate all o-rings with Dow Corning III silicone compound or equivalent.
15. To re-assemble valve follow steps 1 through 10 in reverse order.

NOTE: If mounting actuator on mounting flange (13), make sure handle (7) is removed and stem (6) and actuator are aligned.

After replacing carrier (3), the face of the carrier should remain slightly projected from the end of the body. Make sure the ball rotates smoothly with only a touch of resistance.

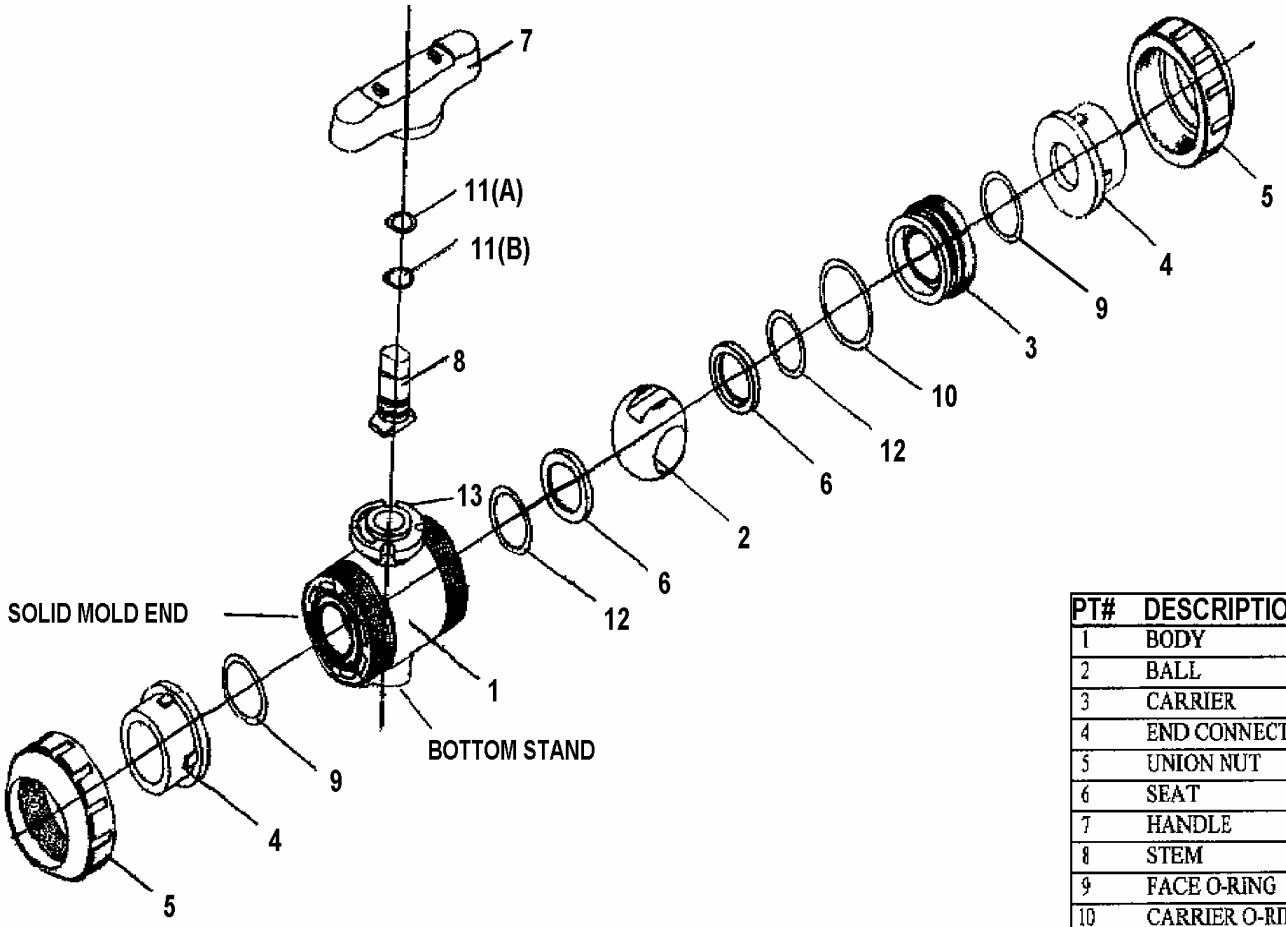

PT#	DESCRIPTION	QTY	MATERIALS
1	BODY	1	PVC/PP/PVDF/CPVC
2	BALL	1	PVC/PP/PVDF/CPVC
3	CARRIER	1	CPE/EPDM/VITON/HYP.
4	END CONNECTOR	2	PVC/PP/PVDF/CPVC
5	UNION NUT	2	PVC/PP/PVDF/CPVC
6	SEAT	1	CPE/EPDM/CITON/HYP.
7	HANDLE	1	PVC/PP/PVDF/CPVC
8	STEM	1	PVC/PP/PVDF/CPVC
9	FACE O-RING	2	CPE/EPDM/VITON/HYP.
10	CARRIER O-RING	1	CPE/EPDM/VITON/HYP.
11(A)	STEM O-RING (Upper)	1	CPE/EPDM/VITON/HYP.
11(B)	STEM O-RING (Lower)	1	CPE/EPDM/VITON/HYP.
12	SEAT CUSHION	2	CPE/EPDM/VITON/HYP
13	MOUNTING FLANGE	1	PVC/PP/PVDF/CPVC

TITLE CHEMLINE TYPE 21 TRUE UNION BALL VALVE	SCALE		DATE	CHEMLINE PLASTICS	
	DR. BY				
REFERENCE SIZES 1/2" - 4"	CHKD BY			DWG. NO. T21V	REV. 0
	APP. BY				

CHEMLINE – GATE VALVES

CHEMLINE Plastics Limited

Your Pipeline To Quality Valves, Strainers, Flowmeters and Controls

55 Guardsman Road
Thornhill, Ontario
L3T 6L2
Canada
Tel: 905-889-7890
Fax: 905-889-8553

MAINTENANCE INSTRUCTIONS
For Chemline Gate Valves Sizes 1-1/2" to 6" (Handwheel Style)

Maintenance

Refer to **ASSEMBLY DRAWING CGA-2 rev 0.** And proceed as follows:

1. To disassemble valve loosen the bolts, nuts (10) and washers (15) from the bonnet (4) and remove from stem (3).

   Important: The disc (2) fits very tightly into the body (1) making disassembly difficult in the closed position. Always have valve in OPEN position when performing maintenance.

2. Lift disc (2) out of body (1) and unscrew from stem support (5).

3. To remove the handwheel (6) loosen and remove the set nut (12) and washer (11).

4. After removing the indicator cover (17) and the indicator pin (18), the indicator ring (16) is removed by inserting the indicator pin (18) into the slot in the indicator ring (16) and turning.

5 To free the stem (3) from the stem support (5) remove the thrust ring (8) and O-Rings (7).

6. Inspect all parts for wear and abrasion and replace if necessary.

7. Lubricate the thrust ring (8) and O-Rings (7) with Dow Silicone Compound III or equivalent.

8. To re-assemble valve reverse steps 1 to 6 above.

9. Set the red line on the indicator ring (16) to the lowest line of the indicator cover (17) by using the indicator pin (18) as described in section 4.

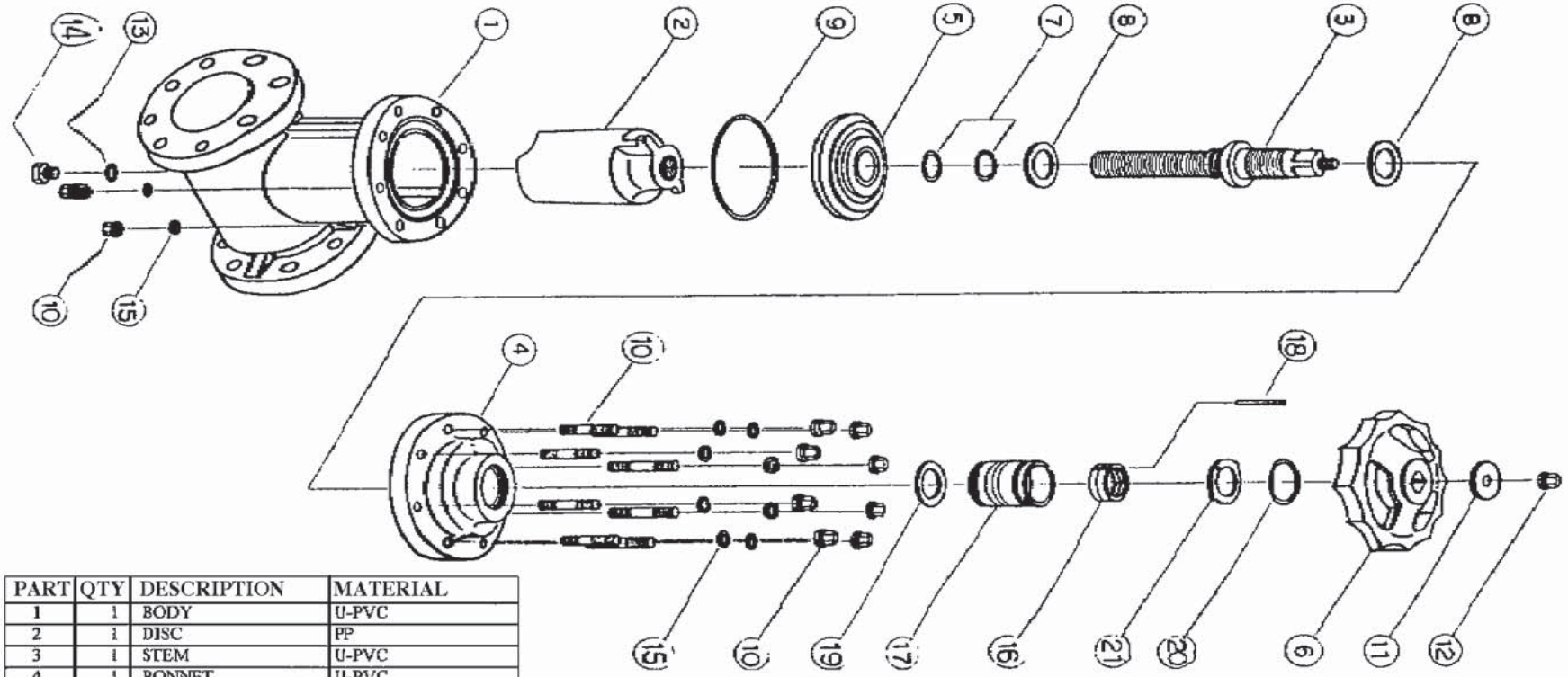

PART	QTY	DESCRIPTION	MATERIAL
1	1	BODY	U-PVC
2	1	DISC	PP
3	1	STEM	U-PVC
4	1	BONNET	U-PVC
5	1	STEM SUPPORT	U-PVC
6	1	HAND WHEEL	PP
7	2	O-RING	EPDM
8	2	THRUST RING	PTFE (teflon)
9	1	O-RING	EPDM
10		BOLTDS & NUTS	VARIOUS
11	1	WASHER	U-PVC
12	1	SET NUT	VARIOUS
13	1	GASKET	EPDM
14	1	DRAIN PLUG	U-PVC
15		WASHER	304 S.S.
16	1	INDICATOR RING	U-PVC
17	1	INDICATOR COVER	POLYCARBONATE
18	1	GUIDE PIN	304 S.S.
19	1	CUSHION	EPDM
20	1	O-RING	EPDM
21	1	GUIDE PIN HOLD	U-PVC

TITLE	CHEMLINE GATE VALVES	SCALE		DATE	CHEMLINE PLASTICS
		DR. BY			
REFERENCE	HANDWHEEL MODELS 1-1/2-6"	CHKD. BY			DWG. NO. OGA-2 / REV. 0
		APP. BY			

CHEMLINE – ELECTRIC ACTUATORS

CHEMLINE Plastics Limited

Your Pipeline To Quality Valves, Strainers, Flowmeters and Controls

55 Guardsman Road
Thornhill, Ontario
L3T 6L2
Canada
Tel: 905-889-7890
Fax: 905-889-8553

INSTALLATION AND MAINTENANCE INSTRUCTIONS
For Chemline Q-Series Electric Actuator

General:

Chemline Q-Series reversing electric actuators feature capacitor run motors and permanently lubricated gear train. Standard units can provide up to 300 in-lbs. of output torque.

Q-Series models feature Nema-4X enclosures as standard and are available in 12 & 24VDC; 12 & 24VAC; 115 & 220VAC voltages.

Standard models are equipped with integral thermal overload protection (AC models) with automatic reset, independently adjustable limit switches, declutchable manual override with position indicating beacon and Zytel FR-50 glass-reinforced housing with stainless steel trim and ISO bolt circle.

Installation:

Refer to **ASSEMBLY DRAWING QACT rev 0.** And proceed as follows:

1. Loosen handle set screw (#35).
2. Remove manual override handle (#34).
3. Loosen cover screws (#33).
4. Remove cover (#27) and cover seal (#28).
5. Install conduit fitting (1/2" NPT) to actuator base (#1).
6. Make electrical connections to terminal block (#8&9) as shown on wiring schematic located inside the cover. There is a green screw on the actuator base plate (#7) for grounding per various electrical codes. NO SCREWS SHOULD BE LOOSENED EXCEPT THOSE ON THE TERMINAL STRIP. Electrical requirements are as per the chart below:

SIZE	TORQUE	115VAC		220VAC		12VDC		24VDC		12VAC		24VAC		CYCLE TIME 90 º	WEIGHT
	IN-LBS	AMP	DUTY	AMP	DUTY	AMP	DUTY	AMP	DUTY	AMP	DUTY	AMP	DUTY	(SEC)	(LBS)
QA	150	.50	100%	.8	75%	2.0	75%	4.0	75%	2.0	75%	4.0	75%	5	3.5
QB	300	.75	75%	.8	75%	2.0	75%	4.0	75%	2.0	75%	4.0	75%	5	3.5

Installation & Maintenance Instructions Q-Series Actuators cont.

7. SEVERAL PARTS MAY GET MISALIGNED OR LOOSE DURING TRANSIT. If the motor doesn't turn upon power-up, loosen all 4 motor top cap screws, then manually rotate the top spindle (rotor) and move motor from side to side as power is applied. Once the motor is turning, maintain it in position and tighten screws completely while cycling motor open and closed. This will guarantee motor's free motion when the cover is replaced. The motor should not require any more adjustment.

8. Install cover screws (#33) and tighten securely.

9. Install the manual override handle (#34) and handle set screw (#35).

10. Unit is now ready for operation. All units are completely calibrated prior to shipment. No internal adjustment should be required.

Troubleshooting

Problem	Cause	Action
The actuator does not operate.	The power source is off.	Check/turn on the power source.
	Wrong or low supply voltage to the actuator.	Check voltage with a tester and set as specified.
	The wiring is incorrect.	Check wiring against the supplied diagram (inside actuator cover).
	The motor/brake may be seized. (See installation note #7.)	Remove brake and/or loosen motor cap bolts and power actuator. Tighten bolts when proper alignment is found.
	Internal bolts may be loose.	Check/tighten all visible internal bolts.
	Travel stop cams may be loose/misadjusted.	Check/tighten/adjust all travel stop cam setscrews (2 per cam).
	Not enough operating torque.	Consult with Chemline technical staff.
	An obstruction may be in the valve.	Remove/check the valve.
The actuator operates, but the valve doesn't open or close.	The drive coupling is broken or disconnected.	Check/replace the coupling.
	The manual override is engaged or backwards.	See manual override operation below.
	The stem of the valve is broken.	Remove/check the valve.
Option doesn't function or functions erratically.	Option is misadjusted.	Adjust as per the appropriate maintenance manual or option header below.

Installation & Maintenance Instructions Q-Series Actuators cont.

Manual Override Operation

Depress the override handle (#34) and rotate within labeled limits as indicated by arrows.
To re-engage simply rotate actuator shaft (#16) within arrows until handle moves up and re-engages.
If actuator still does not respond properly, depress override handle and turn 180 degrees to re-engage in the correct quadrant.

Setting Limit Switches

Open Travel Limit Switch - (Top Switch #14) Using-declutchable manual override, move the valve into a full open position, loosen cam set screws (#22) on top cam (#21) with a 5/64" allen key and rotate cam into limit switch (#14) arm until a click is heard. This designates that the switch circuit has opened and defines a full open position. Tighten cam set screws (#22) on cam (#21).

Closed Limit Switch - (Bottom Switch #14) Using declutchable manual override, move the valve to a full closed position, loosen cam set screws (#22) on bottom cam (#21) with a 5/64" allen key and rotate cam into limit switch (#14) arm until a click is heard. This designates that the switch circuit has opened and defines a full closed position. Tighten cam set screws (#22) on cam (#21).

Adjusting the Cycle Rate Regulator

There are 2 potentiometers for both "on" time and "off" time. With both pots in the extreme CCW position, the unit will operate "on" for 1 second and be "off" for 1 second, etc. until the unit is either fully open or fully closed. To lengthen the cycle time, adjust the CRR module pots clockwise until you have the desired cycle time. However, due to the standard cycle length the adjustment of the "on" pot is limited to the standard cycle time. The CRR module is capable of 1-100 second delays in either "on" or "off" positions.

Installing a Heater/Thermostat

Open cover. Install heater into threaded hole on base plate closest to motor module. If no hole is present, drill hole in base plate about 1" towards cams from terminal side and ½" from motor using #21 drill bit. Tap hole using 10/32 tap. Thread heater into hole. Install heater lead in terminal #12. Install thermostst lead (one with shrink tubing on it) in terminal #13. Wire tie loose wiring. Test by applying power.

Installing a Heater/Thermostat on 4-20 mA board

Open cover. Install heater into threaded hole on base plate closest to motor module. If no hole is present, Drill and tap as above. Thread heater into hole. Install heater leads to J1 on QM1-2 with thermostat going to # 2 and heater going to #3. Wire tie loose wiring. Test by applying power.

Installation & Maintenance Instructions Q-Series Actuators cont.

Installing/Adjusting Centre-Off

With unit in closed position, mount 2 centre-off switches directly on top of standard switches. Install negative lobe came on shaft on top of standard cams. Set cams so that the top cam trips the switch lever traveling counterclockwise and the botton cam trips the switch lever traveling clockwise. Wiring to the extra switches should be opposite to those of the regular switches.
Note: Bottom cam should "just trip" its switch and the top cam should "just miss tripping" its switch. Run unit 90 degrees clockwise and adjust bottom cam to allow 180 degree rotation. Wire unit per drawing # CENT-OFF.

Installing 2-Wire Control with a Relay

Note: all connections to the terminal strip are done on the back side, reference drawing 0018EL.
Connect #1 on relay to #3 on the terminal strip (blue wire).
Connect #3 on relay to #2 on the terminal strip (white wire).
Connect #5 and 7 on relay to #14 on the terminal strip (white wire).
Connect #8 on relay to #15 on the terminal strip (blue wire).
Jump #1 and 16 on the terminal strip (blue wire).
Apply/wire 115VAC to # 1 and 14 on the terminal strip.
Install a customer-supplied switch to #15 and 16 on the terminal strip.

Installing Feedback Potentiometer

Install potentiometer bracket. Install main gear face up on outer shaft. Install potentiometer and gear, engaging onto larger gear drive. Wire as follows: White w/black strip from #1 on pot. to #16 on the terminal strip. Brown w/white strip from #3 on pot. to #14 on the terminal strip. Using multimeter set at 2k ohms, calibrate potentiometer with leads from meter to #15 and 16 on the terminal strip with actuator in the closed position. Multimeter should read between 95 – 100 ohms. With actuator in the open position, multimeter should also read between 95 – 100 ohms.

Installing Mechanical Brake

Remove handle and cover.
Loosen 2 motor module screws diagonally across from each other.
Install bracket with tabs up to bring the face of the bracket to its lowest point.
Install coupling over motor shaft at its lowest point, but do not bottom out on top of the motor.
Tighten set screws with .050" allen key.
Install brake mechanism. It should sit flush on the bracket and show engagement with the coupling.
Remove motor leads A and B from capacitor (on wiring diagram inside cover).
Install silver piggyback connectors on capacitor.
Install motor leads and brake leads (motor leads should be installed on the same side from where they were removed).
Wire tie loose wiring. Cycle unit and make necessary adjustments.

Installation & Maintenance Instructions Q-Series Actuators cont.

Installing Extra Limit Switches

Remove cover.
Remove limit switch screws and add the extra limit switch(es) on top of the standard switches.
Install wiring harness. Harness runs from switches under motor and into terminal strips.
Wire 1 extra (bottom) switch as follows: Pink = common on switch to #6 on terminal strip.
Purple = normally closed on switch to #7 on terminal strip.
Blue = normally open on switch to #8 on terminal strip.
(Set with closed limit switch).
Wire 2nd extra (top) limit switch as follow: Brown = common on switch to #9 on terminal strip.
Green = normally closed on switch to #10 on terminal strip.
Orange = normally open on switch to #11 on terminal strip.
(Set with open limit switch).
Install and set extra cams to trip before the standard limit switches in both open and closed positions.
Wire tie loose wiring. Test by cycling unit.

Maintenance:

Q-Series actuators are manufactured with factory lubricated gear case and gear box. In most cases, this lubricant should never have to be replenished. Please consult the factory if deemed necessary.

The following spare parts should be kept on hand.
1 - Limit Switch (14) rated 15.1 Amps at 125/250/277 VAC; ½ amp at 125VDC; ¼ amp at 250VDC.
1 - Capacitor (13A) or (13B)

CAUTION: Before any maintenance is performed and to prevent ignition of hazardous atmospheres, and reduce the chance of electrical shock, NEVER remove actuator cover while circuits are live. If mounted unit is installed other than straight up, the actuator should be supported individually in order to prevent pipe/valve stresses and loosening up of fasteners.

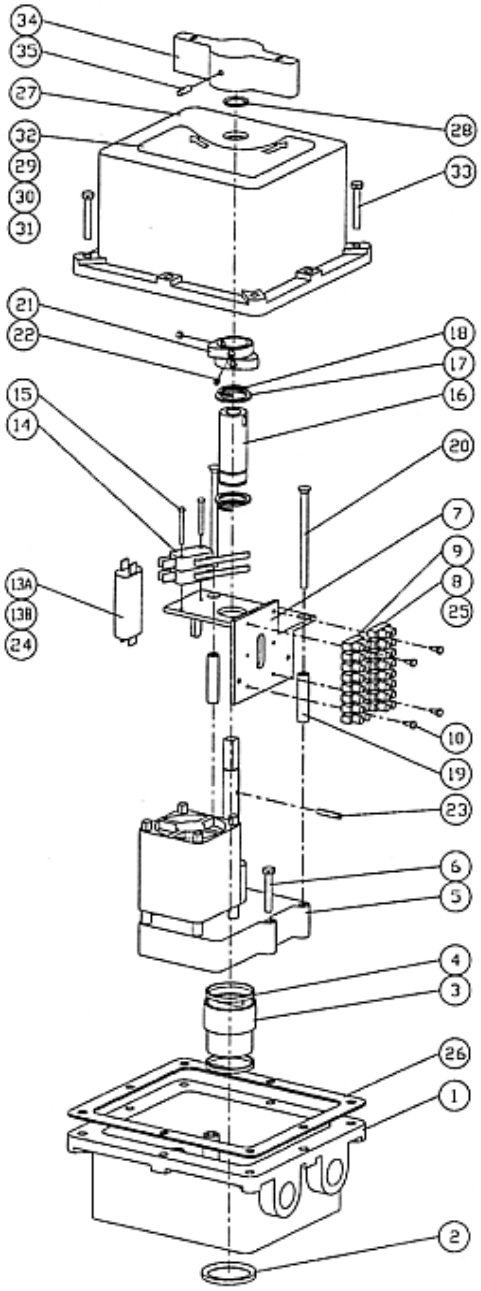

ITEM	QTY	DESCRIPTION
1	1	BASE
2	1	BASE SEAL
3	1	OUTPUT COUPLING
4	2	COUPLING GASKET
5	1	MOTOR
6	2	MOTOR SCREW
7	1	BASE PLATE
8	1	TERMINAL BLOCK 1-8
9	1	TERMINAL BLOCK 9-16
10	4	TERMINAL BLOCK SCREW
13A	1	4.2 MFD CAPACITOR - A94
13B	1	6.7 MFD CAPACITOR - B94
14	2	LIMIT SWITCH
15	2	LIMIT SWITCH SCREW
16	1	OUTER SHAFT
17	2	OUTER SHAFT GASKET
18	2	RETAINING RING
19	2	STANDOFF
20	2	BASE PLATE SCREW
21	2	CAM
22	4	CAM SCREW
23	1	PIN
24	1	2 PC HARNESS
25	1	4 PC HARNESS
26	1	BASE GASKET
27	1	COVER
28	1	COVER SEAL
29	1	WIRE DIAGRAM LABEL
30	1	OPTION LABEL
31	1	QM II LABEL
32	1	OVERRIDE LABEL
33	8	COVER SCREW
34	1	HANDLE
35	1	HANDLE SCREW
36	1	QM II BOX

NOTE:
1. LOCATE ITEM 29 & 30 ON INSIDE SURFACES OF COVER (ITEM 27).
2. LOCATE ITEM 31 ON OUTSIDE BACK SURFACE OF COVER (ITEM 27).

THIS DRAWING AND ALL INFORMATION HEREON IS THE PROPERTY OF ASAHI/AMERICA. ANY COPYING, REPRODUCTION OR UNAUTHORIZED USE IS FORBIDDEN WITHOUT WRITTEN CONSENT.

	NAME	DATE
DR	D CAMERON	9/13/01
APPD	DAVE HURLEY	9/13/01
PROD	LEO LESTER	9/13/01
WO#/SO#		
FILE	ACAD11/QM	

Chemline Plastics Inc.

Q-Series
Exploded View

SIZE	DWG. NO.	REV
A	QACT	0

SCALE NTS SHEET 1 OF 1

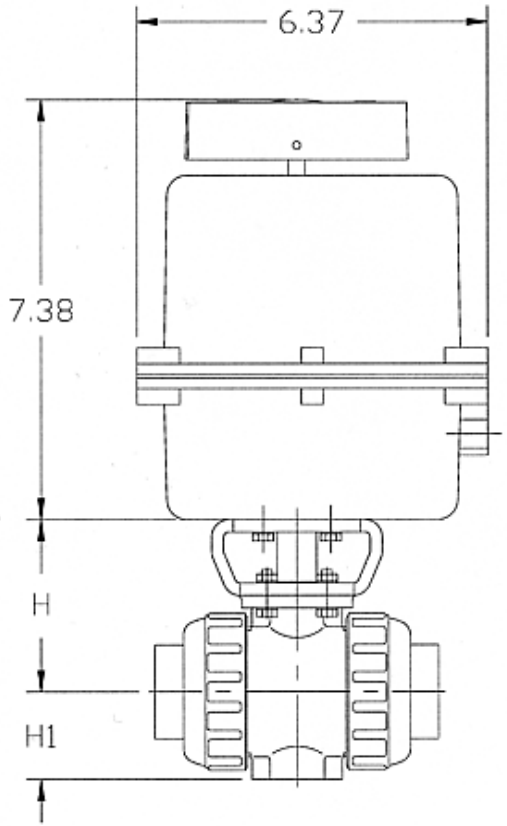

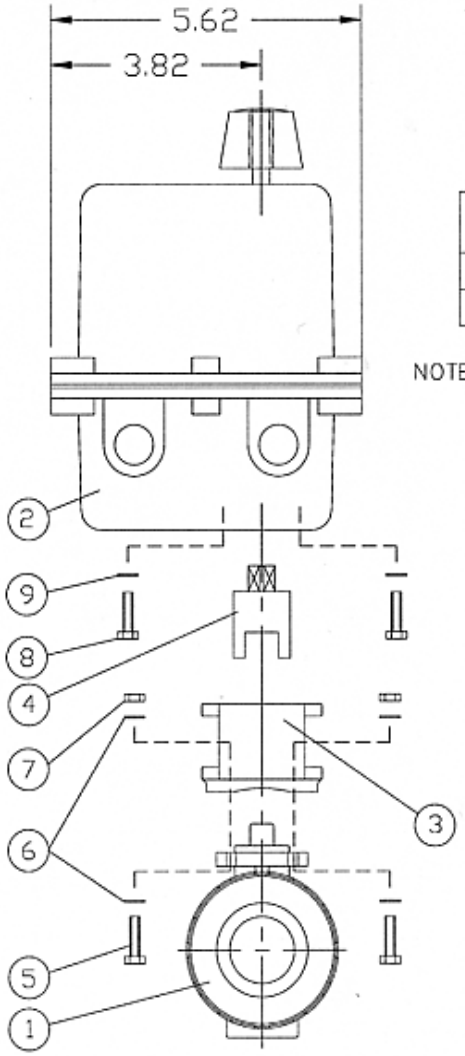

UNIT: INCH

VALVE SIZE	1/2"	3/4"	1"	1-1/4"	1-1/2"	2"
H	2.76	3.01	3.29	3.64	3.98	4.43
H1	1.14	1.38	1.54	1.85	2.17	2.60

NOTE. The shape and appearance of assembly differ a little with nominal size compared to this drawing.

ITEM	DESCRIPTION	MATERIAL	QTY
9	FLAT WASHER (M6.0)	STAINLESS STEEL	4
8	BOLT (M6.0x1-16LG)	STAINLESS STEEL	4
7	NUT (FOR 1/2" THRU 1-1/4" : M5.0x.8) (FOR 1-1/2" THRU 2" : M6.0x1)	STAINLESS STEEL	4
6	FLAT WASHER (FOR 1/2" THRU 1-1/4" : M5.0) (FOR 1-1/2" THRU 2" : M6.0)	STAINLESS STEEL	8
5	BOLT (FOR 1/2" THRU 1-1/4" : M5.0x.8-16LG) (FOR 1-1/2" THRU 2" : M6.0x1-20LG)	STAINLESS STEEL	4
4	COUPLING	STAINLESS STEEL 303	1
3	MOUNTING BRACKET	PPG	1
2	ACTUATOR SERIES 94	ZYTEL	1
1	BALL VALVE TYPE 21	PVC,CPVC,PP,PVDF	1

THIS DRAWING AND ALL INFORMATION HEREON IS THE PROPERTY OF ASAHI/AMERICA. ANY COPYING, REPRODUCTION OR UNAUTHORIZED USE IS FORBIDDEN WITHOUT WRITTEN CONSENT.

	NAME	DATE
DR	KENICHI MIYAZAKI	8/2/01
APPD	DAVE HURLEY	8/2/01
PROD	LEO LESTER	8/2/01
WO#/CO#		
FILE		

CHEMLINE PLASTICS

Q-SERIES ACTUATOR ON TYPE-21 BALL VALVE 1/2" TO 2"

SIZE	DWG. NO.	REV
A	0106BV	A

SCALE NTS SHEET 1 OF 1

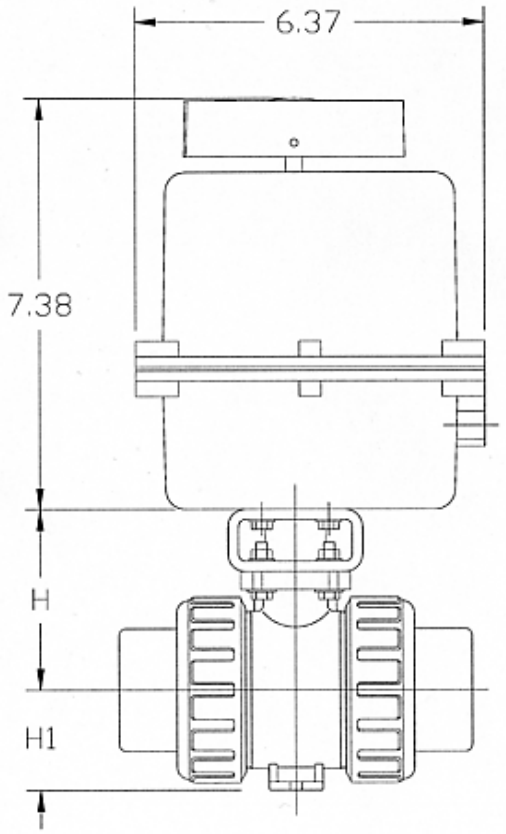

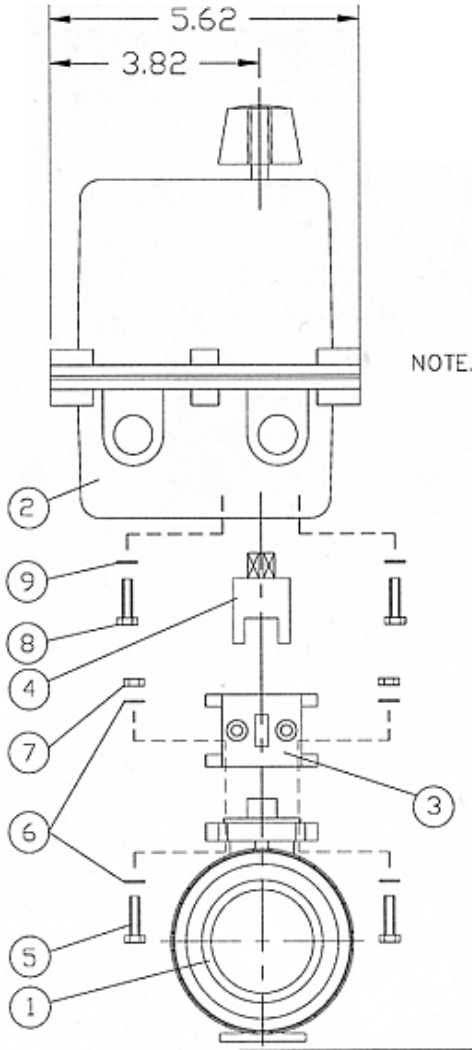

UNIT: INCH

VALVE SIZE	2-1/2"	3"
H	5.12	5.47
H1	2.83	3.35

NOTE. The shape and appearance of assembly differ a little with nominal size compared to this drawing.

ITEM	DESCRIPTION	MATERIAL	QTY
9	FLAT WASHER (M6.0)	STAINLESS STEEL	4
8	BOLT (M6.0x1-16LG)	STAINLESS STEEL	4
7	NUT (M8.0x1.25)	STAINLESS STEEL	4
6	FLAT WASHER (M8.0)	STAINLESS STEEL	8
5	BOLT (M8.0x1.25-35LG)	STAINLESS STEEL	4
4	COUPLING	STAINLESS STEEL 303	1
3	MOUNTING BRACKET	PPG	1
2	ACTUATOR SERIES 94	ZYTEL	1
1	BALL VALVE TYPE 21	PVC,CPVC,PP,PVDF	1

THIS DRAWING AND ALL INFORMATION HEREON IS THE PROPERTY OF ASAHI/AMERICA. ANY COPYING, REPRODUCTION OR UNAUTHORIZED USE IS FORBIDDEN WITHOUT WRITTEN CONSENT.

	NAME	DATE
DR	KENICHI MIYAZAKI	8/14/01
APPD	DAVE HURLEY	8/14/01
PROD	LEO LESTER	8/14/01
WO#/CO#		
FILE		

CHEMLINE PLASTICS

Q-SERIES ACTUATOR ON TYPE-21 VALVE 2-1/2" & 3"

SIZE	DWG. NO.	REV
A	0112BV	A

SCALE NTS SHEET 1 OF 1

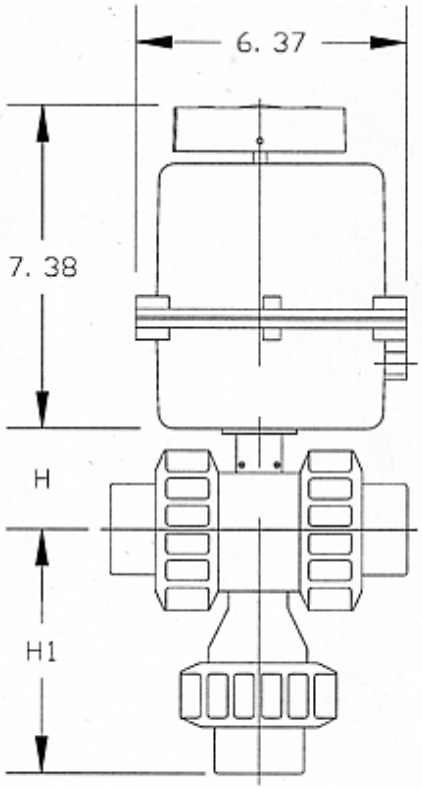

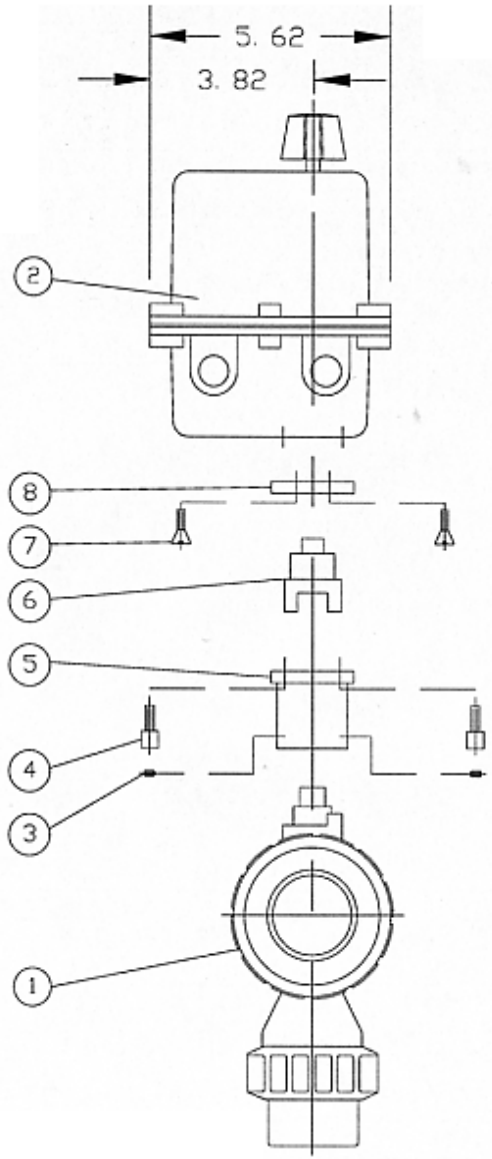

UNIT: INCH

VALVE SIZE	1/2"	3/4"	1"	1-1/4"	1-1/2"	2"
H	1.95	2.31	2.46	2.92	3.85	4.00
H1	3.33	3.88	4.81	6.61	6.61	7.57

NOTE. The shape and appearance of assembly differ a little with nominal size compared to this drawing.

ITEM	DESCRIPTION	MATERIAL	QTY
8	PLATE MOUNTING (FOR 1-1/2" AND 2" ONLY)	ANODIZED ALUM.	1
7	SCREW FLAT HD (FOR 1-1/2" AND 2" ONLY)	300 SS	4
6	COUPLING	ANODIZED ALUM.	1
5	SADDLE	ANODIZED ALUM.	1
4	SCREW SOC HD (FOR 1/2" THRU 1-1/4" : M6x 16) (FOR 1-1/2" THRU 2" : M8x 12)	300 SS	4
3	SET SCREW (10-32x1/4")	300 SS	2
2	ACTUATOR SERIES 94	ZYTEL	1
1	MULTI PORT BALL VALVE	PVC,CPVC,PP,PVDF	1

THIS DRAWING AND ALL INFORMATION HEREON IS THE PROPERTY OF ASAHI/AMERICA. ANY COPYING, REPRODUCTION OR UNAUTHORIZED USE IS FORBIDDEN WITHOUT WRITTEN CONSENT.

	NAME	DATE
DR	KENICHI MIYAZAKI	8/3/01
APPD	DAVE HURLEY	8/3/01
PROD	LEO LESTER	8/3/01
WO#/CO#		
FILE		

CHEMLINE PLASTICS

Q-SERIES ACTUATOR ON MULTI-PORT VALVE 1/2" TO 2"

SIZE	DWG. NO.	REV
A	0108BV	A

SCALE NTS

SHEET 1 OF 1

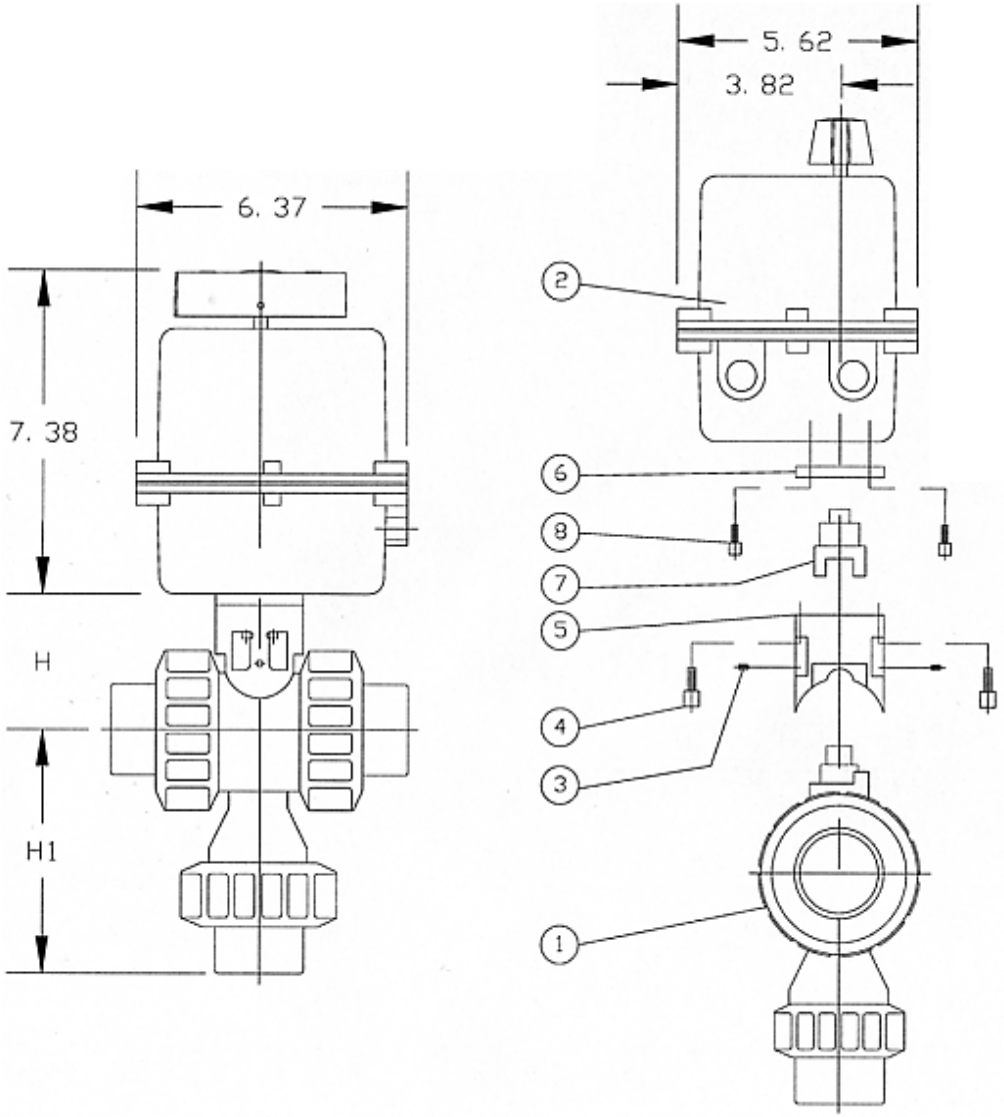

ITEM	DESCRIPTION	MATERIAL	QTY
8	SCREW SOC HD (M6.0x16)	300 SS	4
7	COUPLING	ANODIZED ALUM.	1
6	PLATE MOUNTING	ANODIZED ALUM.	1
5	SADDLE	PVC	1
4	SCREW SOC HD (1/4-20x11/4)	300 SS	4
3	SET SCREW (1/4-20x3/4)	300 SS	4
2	ACTUATOR SERIES 94	ZYTEL	1
1	MULTI PORT BALL VALVE	PVC,CPVC,PP,PVDF	1

UNIT: INCH

VALVE SIZE	2-1/2"	3"
H	5.12	5.50
H1	10.34	10.34

NOTE. The shape and appearance of assembly differ a little with nominal size compared to this drawing.

THIS DRAWING AND ALL INFORMATION HEREON IS THE PROPERTY OF ASAHI/AMERICA. ANY COPYING, REPRODUCTION OR UNAUTHORIZED USE IS FORBIDDEN WITHOUT WRITTEN CONSENT.

	NAME	DATE
DR	KENICHI MIYAZAKI	8/3/01
APPD	DAVE HURLEY	8/3/01
PROD	LEO LESTER	8/3/01
WO#/CO#		
FILE		

CHEMLINE PLASTICS

Q-SERIES ACTUATOR ON MULTI-PORT VALVE 2-1/2" & 3"

SIZE	DWG. NO.	REV
A	0109BV	A

SCALE NTS SHEET 1 OF 1

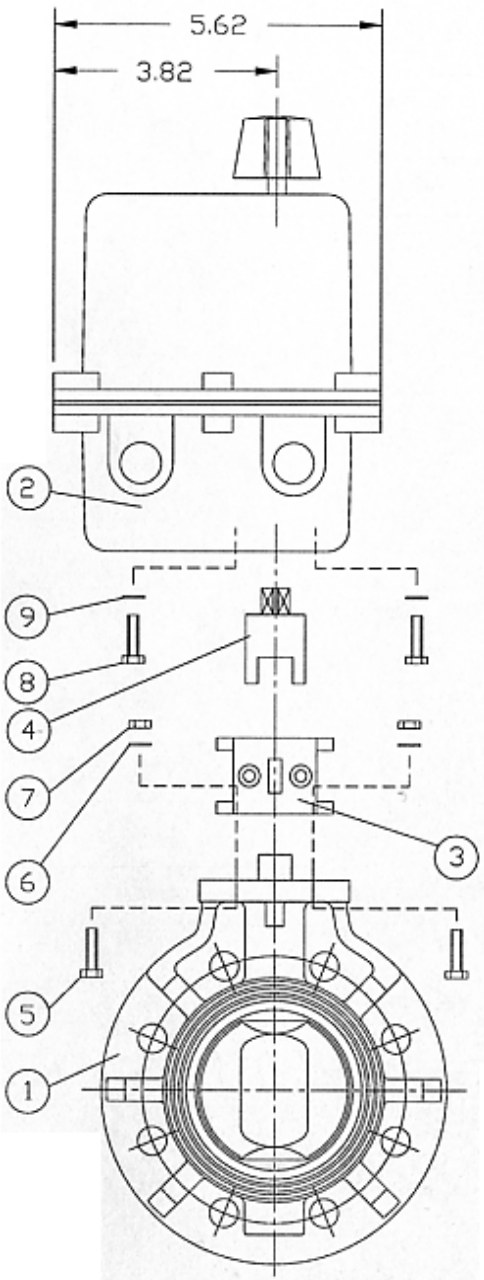

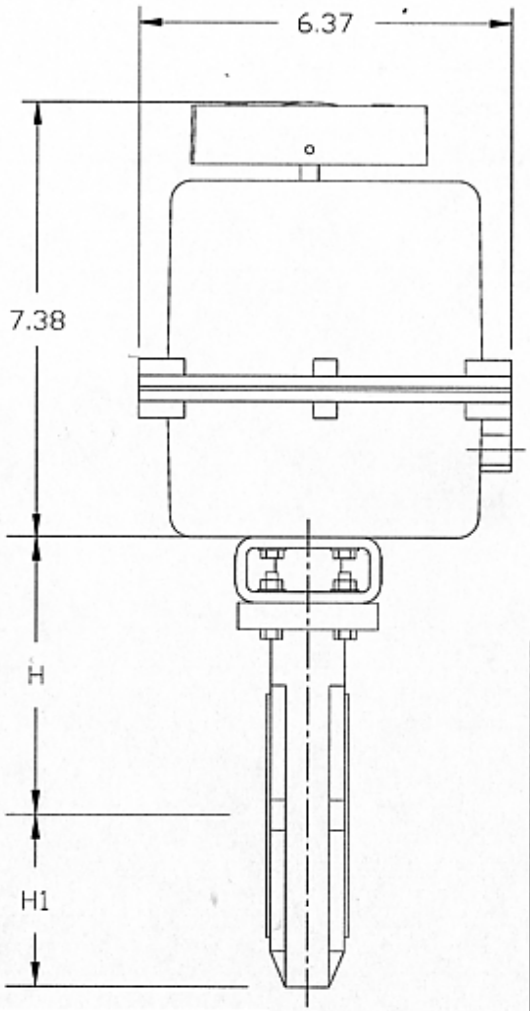

UNIT: INCH

VALVE SIZE	1-1/2"	2"	2-1/2"	3"	4"
H	5.51	5.75	6.18	6.46	7.16
H1	2.95	3.27	3.66	3.94	4.53

NOTE: 1. The shape and appearance of assembly differ a little with nominal size compared to this drawing.
2. For Mounting Bracket : F07xF05, F07

ITEM	DESCRIPTION	MATERIAL	QTY
9	FLAT WASHER (M6.0)	STAINLESS STEEL	4
8	BOLT (M6.0x1-16LG)	STAINLESS STEEL	4
7	NUT (FOR 1-1/2" THRU. 4" : M8.0x1.25)	STAINLESS STEEL	4
6	FLAT WASHER (FOR 1-1/2" THRU. 4" : M8.0)	STAINLESS STEEL	8
5	BOLT (FOR 1-1/2" THRU. 4" : M8.0x1.25-35LG)	STAINLESS STEEL	4
4	COUPLING	STAINLESS STEEL 303	1
3	MOUNTING BRACKET	PPG	1
2	ACTUATOR SERIES 94	ZYTEL	1
1	BUTTERFLY VALVE TYPE 56	PVC,PP,PVDF	1

THIS DRAWING AND ALL INFORMATION HEREON IS THE PROPERTY OF ASAHI/AMERICA. ANY COPYING, REPRODUCTION OR UNAUTHORIZED USE IS FORBIDDEN WITHOUT WRITTEN CONSENT.

	NAME	DATE
DR	KENICHI MIYAZAKI	9/31/01
APPD	DAVE HURLEY	9/31/01
PROD	LEO LESTER	9/31/01
WO#/CO#		
FILE		

CHEMLINE PLASTICS

Q-SERIES ACTUATOR ON TYPE-56 BUTTERFLY 1-1/2" - 4"

SIZE	DWG. NO.	REV
A	0203BF	A

SCALE NTS

SHEET 1 OF 1

WIRING DIAGRAM FOR 115 VAC AND 220 VAC ONLY

ACTUATOR SHOWN IN COUNTER-CLOCKWISE EXTREME OF TRAVEL, OR "OPEN" POSITION

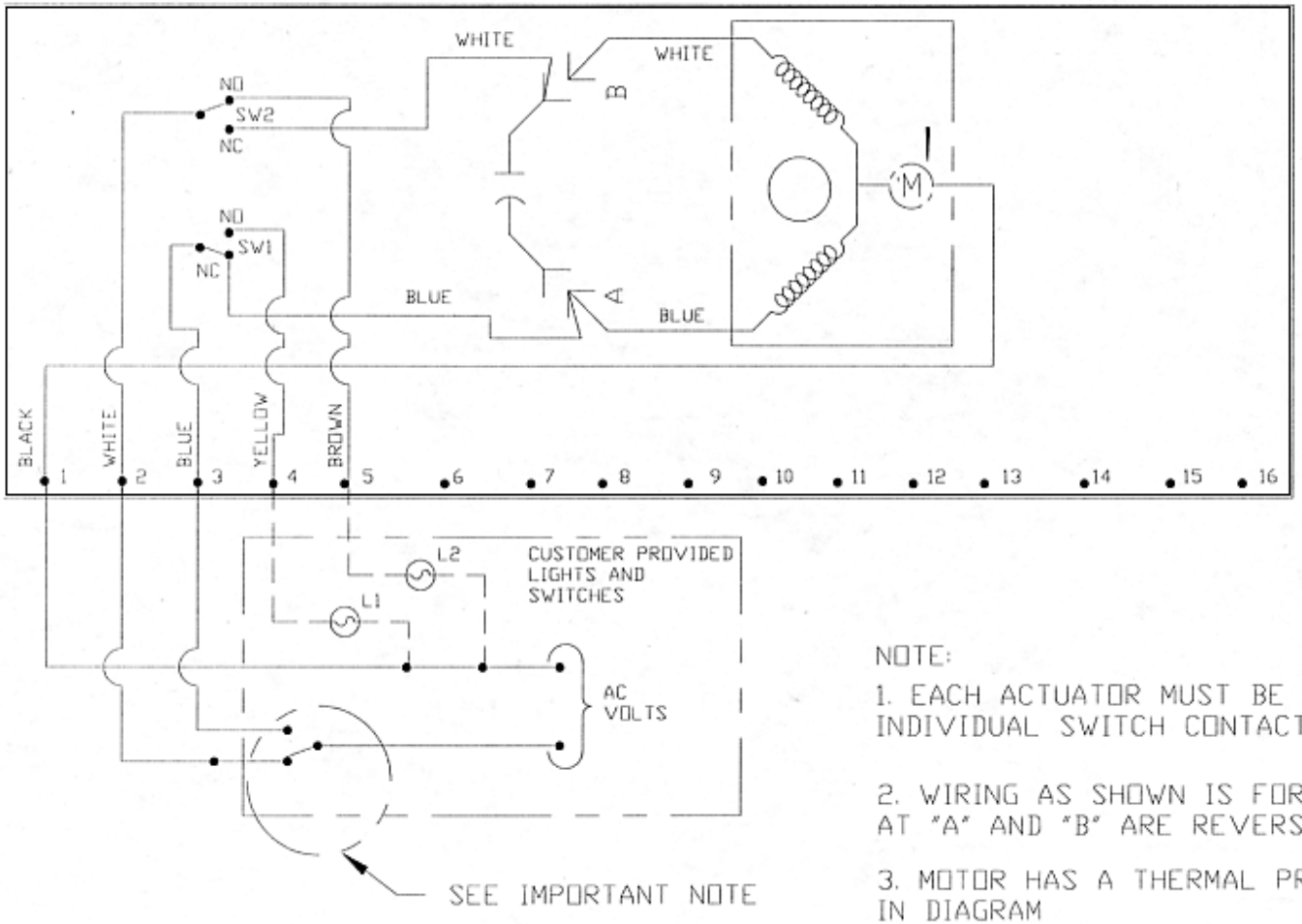

NOTE:

1. EACH ACTUATOR MUST BE POWERED THRU ITS OWN INDIVIDUAL SWITCH CONTACTS TO AVOID CROSS FEED

2. WIRING AS SHOWN IS FOR AA & AB MOTOR LEADS AT "A" AND "B" ARE REVERSABLE FOR AC AND AD

3. MOTOR HAS A THERMAL PROTECTOR AS SHOWN BY (M) IN DIAGRAM

THIS DRAWING AND ALL INFORMATION HEREON IS THE PROPERTY OF ASAHI/AMERICA. ANY COPYING, REPRODUCTION OR UNAUTHORIZED USE IS FORBIDDEN WITHOUT WRITTEN CONSENT.

	NAME	DATE
DR	KENICHI MIYAZAKI	8/3/01
APPD	DAVE HURLEY	8/3/01
PROD	LEO LESTER	8/3/01
WO#/CO#		
FILE		

CHEMLINE PLASTICS INC.

A- & Q-SERIES WIRING DIAGRAM - 120/220VAC

SIZE	DWG. NO.	REV
A	0043EL	A

SCALE NTS SHEET 1 OF 1

DC WIRING DIAGRAM

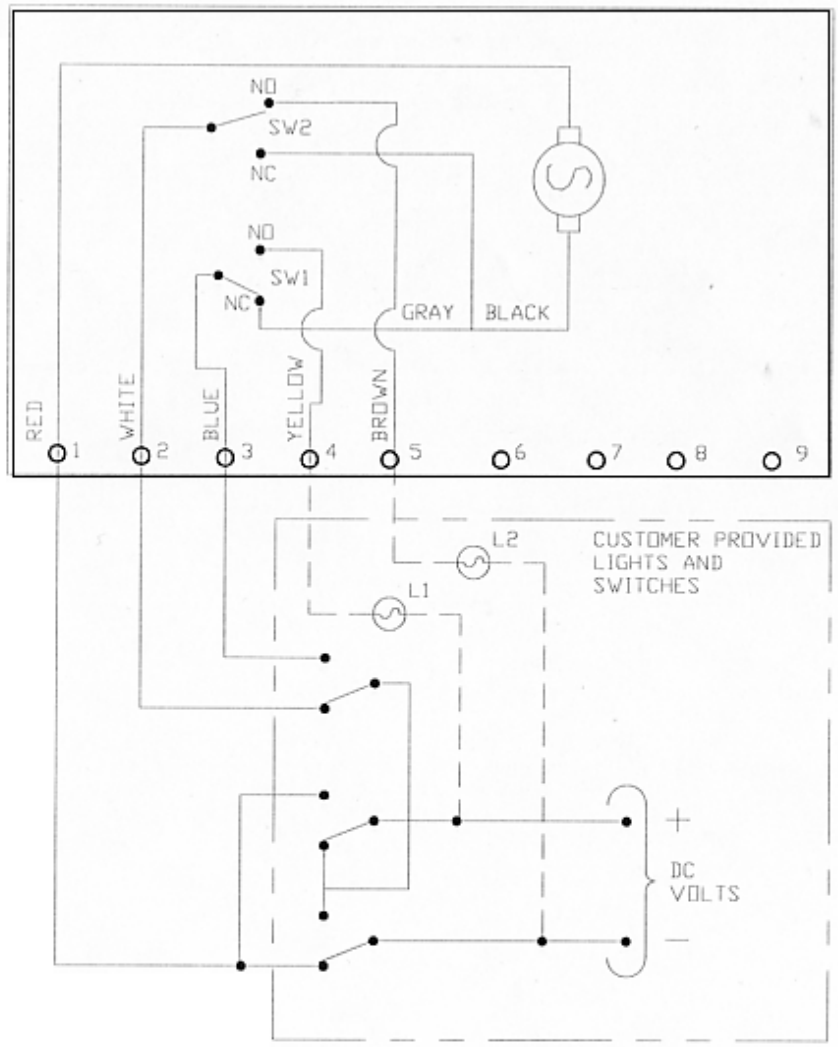

1. ACTUATOR SHOWN IN COUNTER CLOCKWISE EXTREME OF TRAVEL OR "OPEN" POSITON
2. MOTOR LEADS REVERSED FOR 1100 & 2000 IN*LBS.

1	2	3	
-	+		= OPEN
+		-	= CLOSE

THIS DRAWING AND ALL INFORMATION HEREON IS THE PROPERTY OF ASAHI/AMERICA. ANY COPYING, REPRODUCTION OR UNAUTHORIZED USE IS FORBIDDEN WITHOUT WRITTEN CONSENT.

	NAME	DATE
DR	KENICHI MIYAZAKI	8/3/01
APPD	DAVE HURLEY	8/3/01
PROD	LEO LESTER	8/3/01
WO#/CO#		
FILE		

CHEMLINE PLASTICS

A- & Q-SERIES WIRING DIAGRAM - 12/24VDC

SIZE	DWG. NO.	REV
A	0044EL	A

SCALE NTS SHEET 1 OF 1

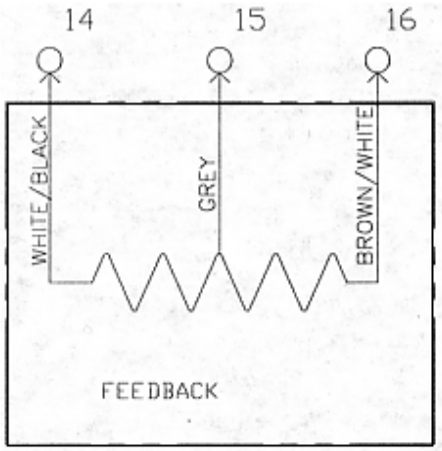

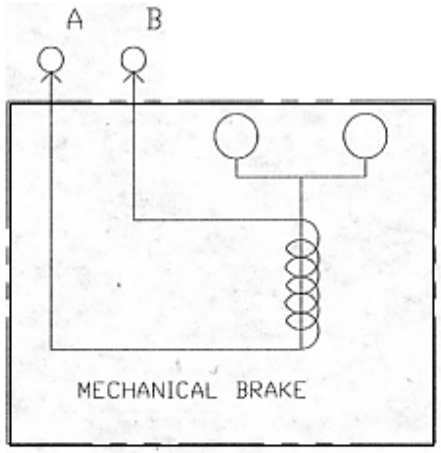

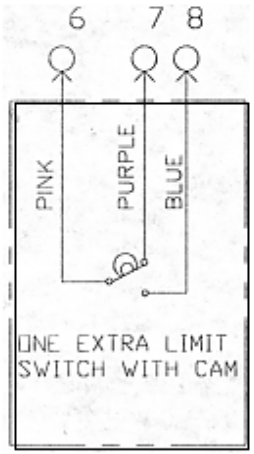

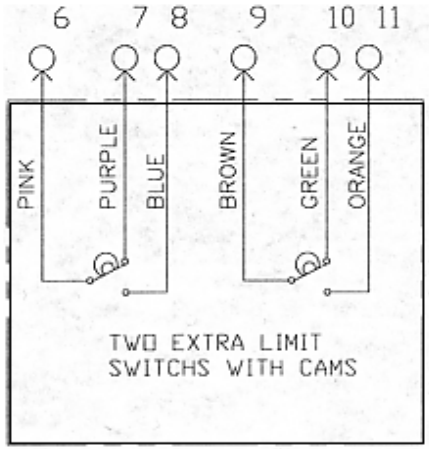

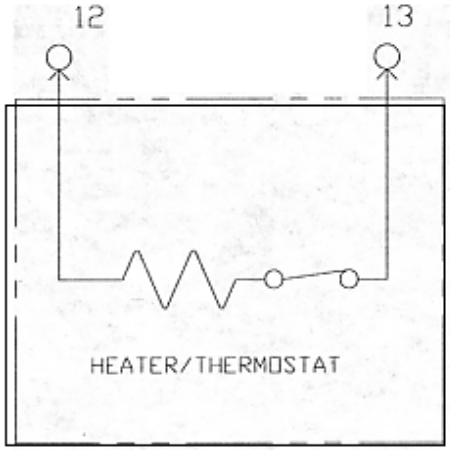

THIS DRAWING AND ALL INFORMATION HEREON IS THE PROPERTY OF ASAHI/AMERICA. ANY COPYING, REPRODUCTION OR UNAUTHORIZED USE IS FORBIDDEN WITHOUT WRITTEN CONSENT.

	NAME	DATE
DR	KENICHI MIYAZAKI	8/3/01
APPD	DAVE HURLEY	8/3/01
PROD	LEO LESTER	8/3/01
WO#/CO#		
FILE		

CHEMLINE PLASTICS

A- & Q-SERIES WIRING DIAGRAM - OPTIONS

SIZE	DWG. NO.	REV
A	0042EL	A
SCALE NTS	SHEET 1 OF 1	

WIRING DIAGRAM FOR 115 VAC AND 220 VAC ONLY

ACTUATOR SHOWN IN COUNTER-CLOCKWISE EXTREME OF TRAVEL, OR "OPEN" POSITION

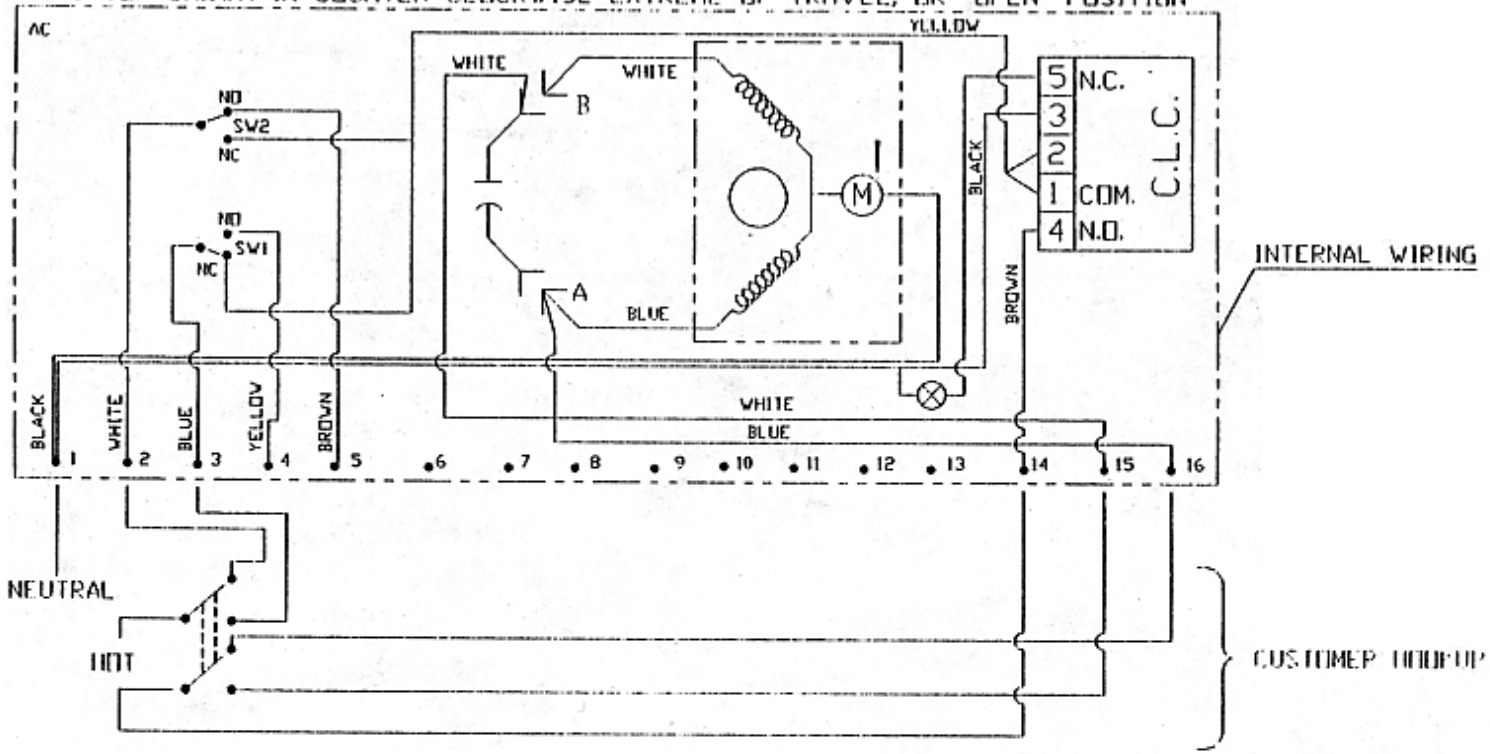

NOTE: 1. EACH ACTUATOR MUST BE POWERED THRU ITS OWN INDIVIDUAL SWITCH CONTACTS TO AVOID CROSS FEED

2. MOTOR HAS A THERMAL PROTECTOR AS SHOWN BY Ⓜ IN DIAGRAM

UNLESS OTHERWISE SPECIFIED
DIMENSIONS ARE IN INCHES TOLERANCES
2 PL DECIMALS ± .01
3 PL DECIMALS ± .005
ANGLES ± .5°
FRACTIONS ± 1/64

MATERIAL

FINISH

THIS DRAWING AND ALL INFORMATION HEREON IS THE PROPERTY OF ASAHI/AMERICA. ANY COPYING, REPRODUCTION OR UNAUTHORIZED USE IS FORBIDDEN WITHOUT WRITTEN CONSENT.

	NAME	DATE
DR	S. SELEZNEV	5/24/96
CHK	Jun Ohki	5/24/96
APPD		
PATH	D:\ELECTRIC	

CHEMLINE PLASTICS

A- & Q-SERIES ACTUATOR WITH CYCLE RATE REGULATOR

SIZE	DWG. NO.	REV
A	0001EL	1

SCALE NTS

SHEET 1 OF 1

WIRING DIAGRAM FOR 12 OR 24VDC ONLY
ACTUATOR SHOWN IN COUNTER-CLOCKWISE EXTREME OF TRAVEL, OR "OPEN" POSITION

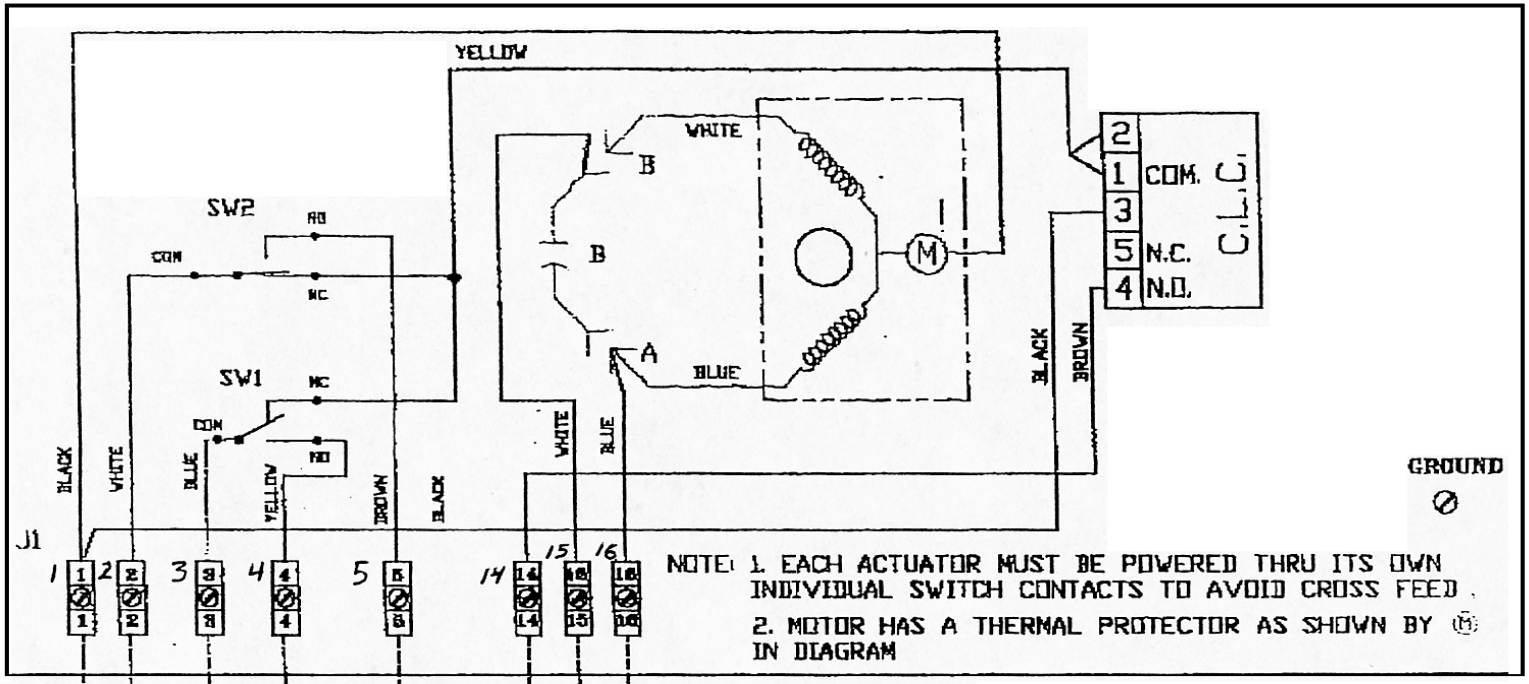

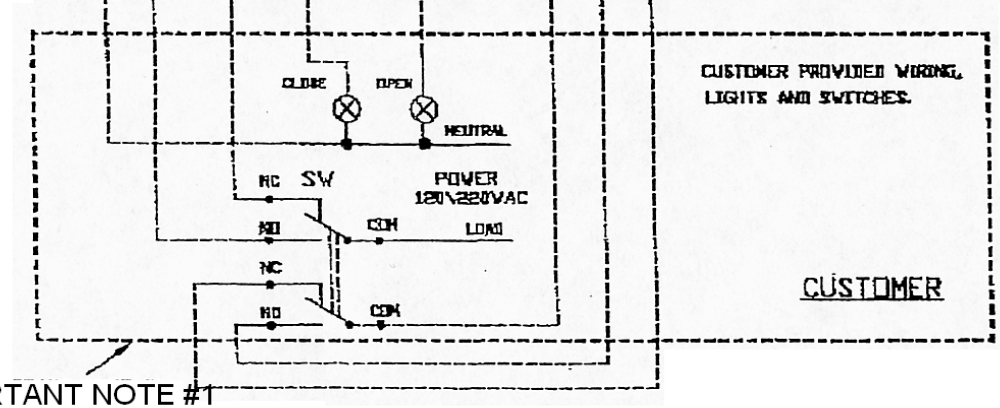

SEE IMPORTANT NOTE #1

SWITCH LOCATION VIEWED
FROM TERMINAL STRIP FRONT

SW-2 CHANNEL OPEN
SW-1 CHANNEL CLOSE

UNLESS OTHERWISE SPECIFIED				THIS DRAWING AND ALL INFORMATION HEREON IS THE PROPERTY OF ASAHI/AMERICA. ANY COPYING, REPRODUCTION OR UNAUTHORIZED USE IS FORBIDDEN WITHOUT WRITTEN CONSENT.			**CHEMLINE PLASTICS**		
DIMENSIONS ARE IN INCHES					NAME	DATE	Q and A-SERIES ACTUATOR WITH CYCLE RATE REGULATOR		
MACHINING TOLERANCES:	2 PL DECIMALS	± .01		DR	V.TCHERNIAEV	08.17.00			
	3 PL DECIMALS	± .005		APPD					
	ANGULAR	± 1/2°		PROD					
	FRACTIONAL	± 1/64					SIZE A	DWG. NO. 03ACWCLC.dwg	REV 0
FABRICATION TOLERANCES:	1/2" – 8"	± 1/4		PATH	AC\03ACWCLC				
	10" AND UP	± 1/2					SCALE	SHEET 1 OF 1	
	ANGULAR	± 1.0°		WO#/CO#					
MATERIAL									
FINISH									

WIRING DIAGRAM FOR 115 VAC

ACTUATOR SHOWN IN COUNTER-CLOCKWISE EXTREME OF TRAVEL, OR "OPEN" POSITION

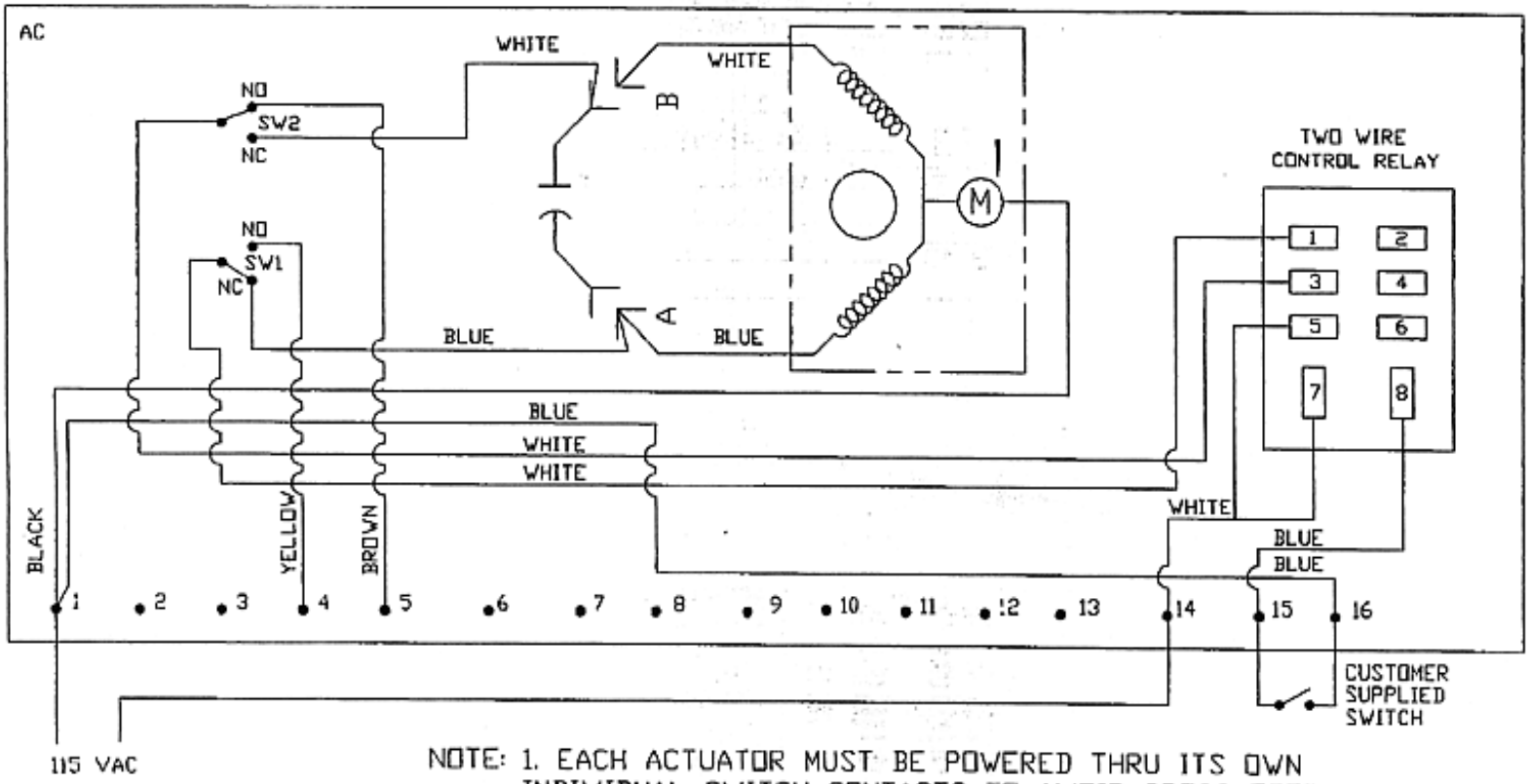

NOTE: 1. EACH ACTUATOR MUST BE POWERED THRU ITS OWN INDIVIDUAL SWITCH CONTACTS TO AVOID CROSS FEED

2. MOTOR HAS A THERMAL PROTECTOR AS SHOWN BY Ⓜ IN DIAGRAM

THIS DRAWING AND ALL INFORMATION HEREON IS THE PROPERTY OF ASAHI/AMERICA. ANY COPYING, REPRODUCTION OR UNAUTHORIZED USE IS FORBIDDEN WITHOUT WRITTEN CONSENT.

	NAME	DATE
DR	A.SELEZNEV	2/25/97
CHK	[signature]	2/28/97
APPD		
FILE	C:\ELECTRIC	

CHEMLINE PLASTICS

115 VAC WIRING DIAGRAM
A & Q SERIES W/ 2-WIRE CONTROL

SIZE	DWG. NO.	REV
A	0018EL	5

SCALE 1=1

SHEET 1 OF 1

(ACTUATOR SHOWN IN COUNTER-CLOCKWISE EXTREME OF TRAVEL, OR 'OPEN' POSITION)

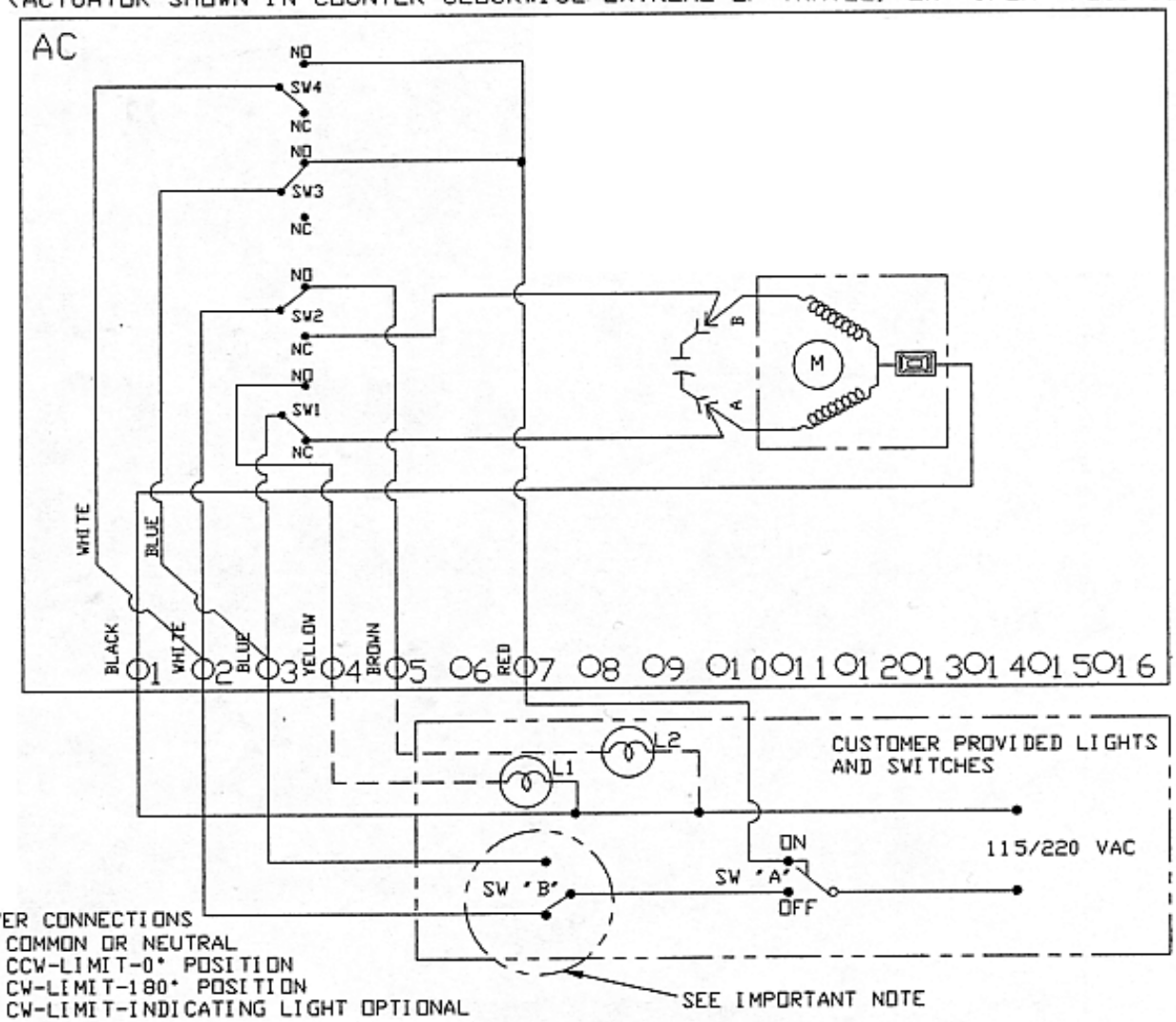

POWER CONNECTIONS
1. COMMON OR NEUTRAL
2. CCW-LIMIT-0° POSITION
3. CW-LIMIT-180° POSITION
4. CW-LIMIT-INDICATING LIGHT OPTIONAL
5. CCW-LIMIT-INDICATING LIGHT OPTIONAL
7. CENTER-OFF-90° POSITION, BOTH DIRECTIONS

IMPORTANT
EACH ACTUATOR MUST BE POWERED THRU ITS OWN INDIVIDUAL SWITCH CONTACTS TO AVOID CROSS FEED
MOTOR HAS A 'THERMAL PROTECTOR' AS SHOWN BY IN DIAGRAM.

SWITCH LOCATION VIEWED FROM TERMINAL STRIP FRONT

SW2	SW4
SW1	SW3

THIS DRAWING AND ALL INFORMATION HEREON IS THE PROPERTY OF ASAHI/AMERICA. ANY COPYING, REPRODUCTION OR UNAUTHORIZED USE IS FORBIDDEN WITHOUT WRITTEN CONSENT.

	NAME	DATE
DR	SS	6/7/96
CHK		
APPD		
FILE	C:\ELECTRIC	
	DO NOT SCALE DRAWING	

CHEMLINE PLASTICS

CENTER-OFF WIRING
A- & Q-SERIES ACTUATOR

SIZE	DWG. NO.	REV
A	CENT-OFF	1

SCALE NTS

SHEET 1 OF 1

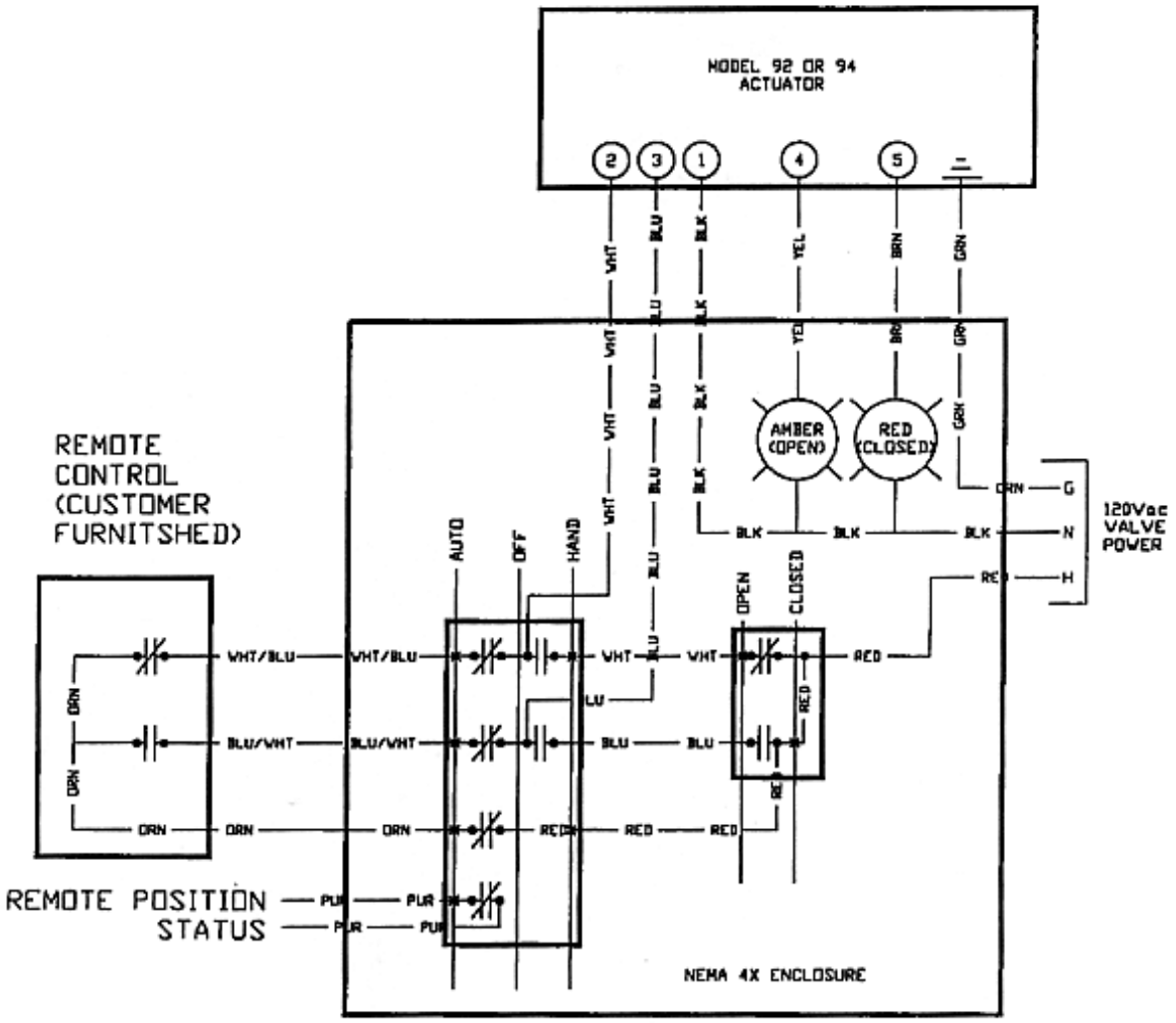

NOTES:
ALL COMPONENTS AND ENCLOSURE ARE NEMA 4X.

ENCLOSURE IS FURNISHED WITH 8 INCH PIG TAIL FOR WIRING CONNECTION.

MANUFACTURER RESERVES THE RIGHT TO CHANGE OR MODIFY PRODUCT DESIGN OR PRODUCT WITHOUT PRIOR NOTICE.

UNLESS OTHERWISE SPECIFIED		THIS DRAWING AND ALL INFORMATION HEREON IS THE PROPERTY OF ASAHI/AMERICA. ANY COPYING, REPRODUCTION OR UNAUTHORIZED USE IS FORBIDDEN WITHOUT WRITTEN CONSENT.			CHEMLINE PLASTICS	
DIMENSIONS ARE IN INCHES			NAME	DATE	MANUAL OVERRIDE STATION MODEL 11-100	
MACHINING TOLERANCES:	2 PL DECIMALS ± .01 3 PL DECIMALS ± .005 ANGULAR ± 1/2° FRACTIONAL ± 1/64	DR	RNH	2MAY2000	SIZE A	DWG. NO. / REV 0
FABRICATION TOLERANCES:	1/2" – 8" ± 1/4 10" AND UP ± 1/2 ANGULAR ± 1.0°	APPD				
MATERIAL		PROD				
FINISH	70 µ" (0.8 µm)	PATH	C:\R13\DRAWINGS		SCALE NONE	SHEET 1 OF 1
		WO#/CO#				

CHEMLINE – NEEDLE VALVES

CHEMLINE Plastics Limited

Your Pipeline To Quality Valves, Strainers, Flowmeters and Controls

55 Guardsman Road
Thornhill, Ontario
L3T 6L2
Canada
Tel: 905-889-7890
Fax: 905-889-8553

MAINTENANCE INSTRUCTIONS
For Chemline Needle Valves Sizes 1/4" - 3/8" - 1/2"

Maintenance (all sizes):

Refer to **ASSEMBLY DRAWING CNV1 rev 0.** And proceed as follows:

1. Valve can be serviced in line as unit' s complete topworks can be removed in one piece.
2. Remove panel nut (6) and lift off bonnet (4).
3. Handle (2) stem (3) and thread insert (5) will lift out in one piece.
4. Remove and inspect seal (7) for wear and abrasion.
5. Replace seal if necessary.
6. To reassemble valve follow steps 2 through 5 in reverse order.

Note: Seal wear can be compensated for by hand tightening the cap.

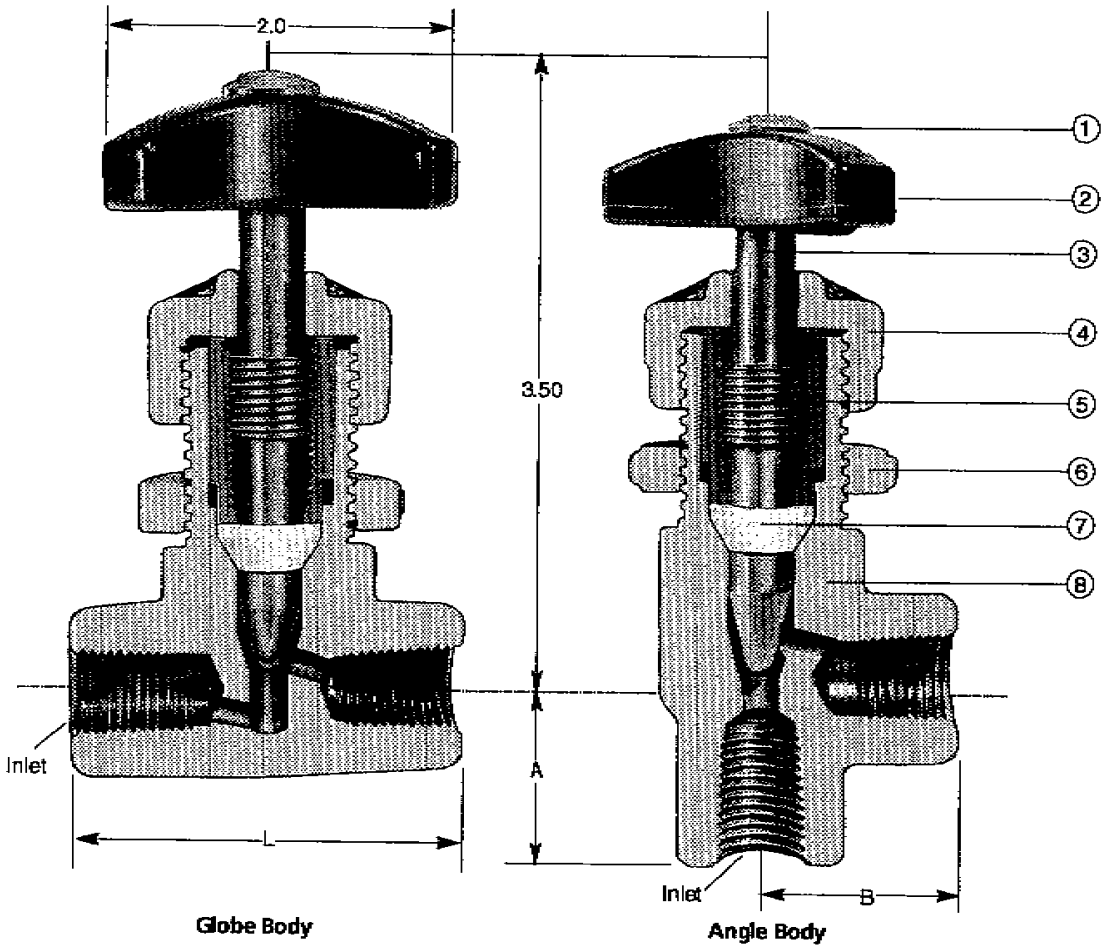

Globe Body

Angle Body

PARTS

No.	Part*	Pcs.	Materials
1	Coloured Button	1	PVC
2	Handle	1	PVC, CPVC, PPG
3	Stem/Needle	1	PVC, CPVC, PPG, PVDF
4	Bonnet	1	PVC, CPVC, PPG
5	Thread Insert	1	Nylon, PPG
6	Panel Nut	1	PVC, CPVC, PPG
7	Seal	1	PTFE
8	Body	1	PVC, CPVC, PPG, PVDF

*Threaded insert in reinforced Nylon for PVC and CPVC valves, PPG for PPG valves.

DIMENSIONS INCHES

Size	L	A	B	Globe	Angle	Outlet Orifice
1/4"	2.33	1.10	1.20	.187	.250	.187
3/8"	2.33	1.10	1.20	.187	.250	.187
1/2"	2.50	1.18	1.25	.218	.250	.218

CHEMLINE NEEDLE VALVES
Sizes 1/4" - 3/8" - 1/2"

CHEMLINE Plastics Limited

Dwg. No.: CNV1

CHEMLINE – GAUGE ISOLATORS

CHEMLINE Plastics Limited

Your Pipeline To Quality Valves, Strainers, Flowmeters and Controls

55 Guardsman Road
Thornhill, Ontario
L3T 6L2
Canada
Tel: 905-889-7890
Fax: 905-889-8553

MAINTENANCE INSTRUCTIONS
For Chemline S.I. Series Gauge Isolator 1/4" - 1/2"

Maintenance:

Refer to **ASSEMBLY DRAWING GISI Rev 0.** And proceed as follows:

1. Gauge isolators can be mounted and mounted and filled with glycerine at Chemline prior to delivery, or isolators can be mounted and filled on site.
2. Remove isolator from valve.
3. To disassemble isolator remove gauge (4) from upper chamber (3).
4. Remove bolts, nuts and washers (5) and separate upper chamber (3) from lower chamber (1).
5. Drain glycerin (or other fluid) from both chambers (1 & 3), prior to removing diaphragm (2).
6. Check PTFE diaphragm (2) for wear and replace if necessary.
7. Refill upper chamber (3) and replace diaphragm (2).
8. To reassemble diaphragm follow steps 1 through 4 in reverse, to hand-tight plus ¼ turn.

DIMENSIONS (Inches)

Inlet Size	1/2
Instrument Connection	1/4

A	B	C	D	E	F
3.0	4.10	2.64	2.50	3.43	3.19

Gauge Isolators S.I. Series cont.

WORKING PRESSURES

TEMPERATURE				
F	C	PVC	PP	PVDF
0	-17	40	-	200
25	-4	130	70	200
50	10	180	130	200
75	24	185	150	200
100	38	160	140	200
125	51	110	120	180
150	66	-	90	160
175	79	-	60	130
200	93	-	-	100
250	120	-	-	60

PART	DESCRIPTION	QTY	MATERIAL
1	LOWER CHAMBER	1	PVC/PP/PVDF
2	DIAPHRAGM	1	TEFLON/PTFE
3	UPPER CHAMBER	1	PVC/PP/PVDF
4	OPTIONAL GAUGE	1	S.S. CASE
5	HEX BOLT/NUT/WASHERS	9	304 SS/M5x30

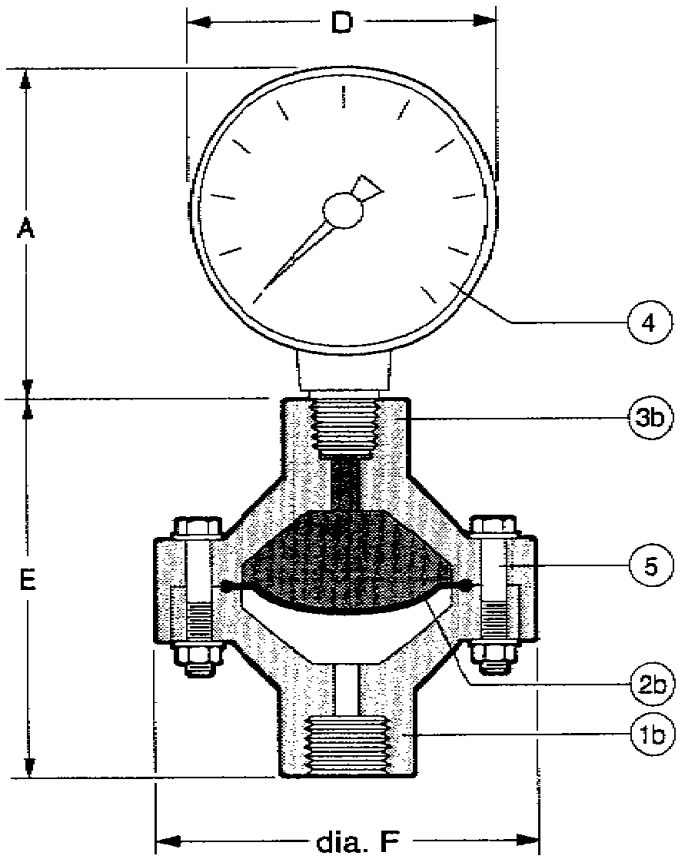

TITLE: CHEMLINE GAUGE ISOLATOR	SCALE		DATE	CHEMLINE PLASTICS	
	DR. BY				
REFERENCE: S.I. SERIES 1/4 AND 1/2	CHKD. BY			DWG. NO. GISI	REV. 0
	APP. BY				

CHEMLINE – SAMPLE VALVES

PDF Published February 7, 2020

LC Series Lab Cocks

CHEMLINE PLASTICS
SUPERIOR FLOW SOLUTIONS

Chemline **LC Series** Lab Cocks are rugged quarter turn mini ball valves. They are ideal for general use in instrumentation lines, available at a fraction of the cost of comparable stainless steel valves. Other applications include air lines for aquaculture, for venting gas in pipe lines, process sampling and laboratory use.

PVC

NSF[2] Certified to NSF/ANSI 61

SERIES: LC

SIZES: 1/4"

ENDS: Male Threaded, Female Threaded, Male Thread x Hose, Hose x Hose, Male Thread x Female Thread, Female Thread x Hose, Male Thread x 90° Elbow

SEALS: EPDM or FKM (Viton®) Seats & Stem O-Ring

features

- **Low Cost**
- **Heavy Stems** – Rugged construction
- **1/4" Full Bore** – Low pressure drop
- **Graduation Marks** – For flow control

DIMENSIONS INCHES

Item No.	Ends	L
LCTH**x**	1/4" Male Thread x 3/8" ID Hose	3.48
LCFT**x**	1/4" Female Threaded	2.80
LCMT**x**	1/4" Male Threaded	2.60
LCHH**x**	3/8" ID Hose x Hose	4.37
LCFH**x**	1/4" Female Thread x Hose	3.58
LCMF**x**	1/4" Male x Female Thread	2.70
LCME**x**	1/4" Male Thread x 90° Elbow	3.66

x Denotes either **E** for EPDM seals or **V** for FKM (Viton®) seals

Cv VALUE VS. OPENING

Graduation Mark	1	2	3	4
C_V Value	0.20	0.37	0.83	1.65

Male Threaded

Female Threaded

Male Thread x Hose

Hose x Hose

Male Thread x Female Thread

Female Thread x Hose

Male Thread x 90° Elbow

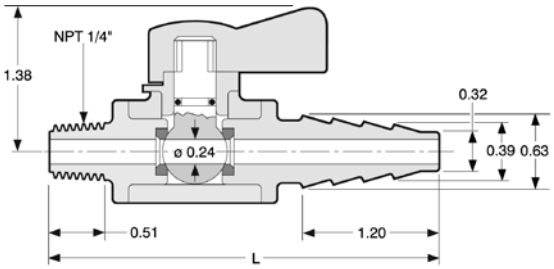

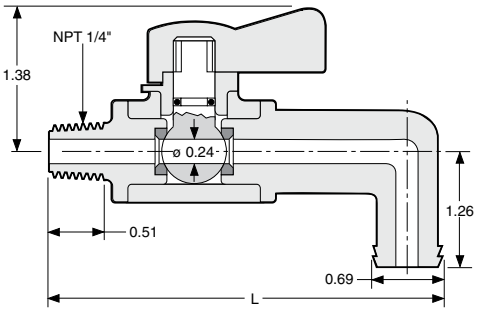

WORKING PRESSURES VS.TEMPERATURE

- 150 psi at 0 to 50°C (30 to 120°F)
- 15 psi at 60°C (140°F) maximum

VACUUM RATING

- 29.9 inches mercury

[1]ENDS AVAILABLE SPECIAL ORDER

- 1/4" or 3/8" Female Thread x Hose
- Male Thread x Female Thread – 1/4"x 1/4", 1/4"x 3/8", 1/2"x 1/4" or 1/2"x 3/8"
- 1/2" Male Thread x Hose
- Female Threaded – 1/4"x 3/8", 3/8"x 3/8"
- Male Threaded – 1/4"x 1/2", 1/2"x 1/2"

[2] PVC valves with EPDM or FKM (Viton®) seals are certified under NSF/ANSI Standard 61 for contact with drinking water.

02/20 ©Chemline Plastics Limited 2020
Chemline is a registered trade mark of Chemline Plastics Limited

CHEMLINE PLASTICS
SUPERIOR FLOW SOLUTIONS

55 Guardsman Road, Thornhill, ON, L3T 6L2, Canada | ISO 9001:2015 Certified
tel.905.889.7890 | fax.905.889.8553 | request@chemline.com | chemline.com

ENDRESS + HAUSER – TRANSMITTERS

BA00444C/07/EN/23.18
71401181

Valid as of version
01.06.06

Operating Instructions
Liquiline CM442/CM444/CM448

Universal four-wire multichannel controller
Field device

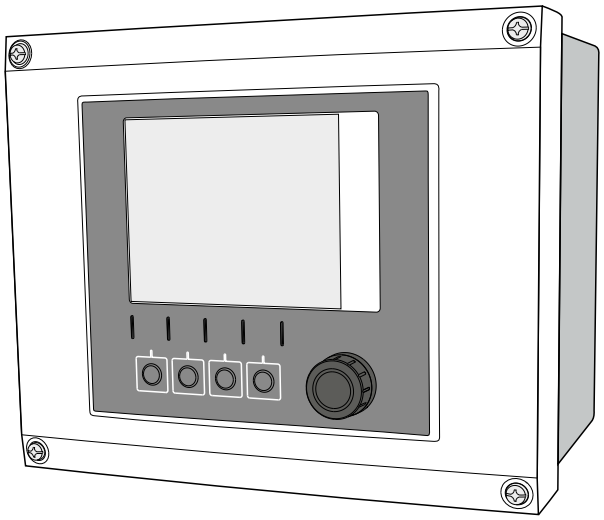

Endress+Hauser
People for Process Automation

Table of contents

1 About this document 5
1.1 Warnings 5
1.2 Symbols 5
1.3 Symbols at the device 5
1.4 Documentation 6

2 Basic safety instructions 7
2.1 Requirements for personnel 7
2.2 Designated use 7
2.3 Occupational safety 7
2.4 Operational safety 8
2.5 Product safety 8

3 Device description 9
3.1 Housing closed 9
3.2 Housing open 9
3.3 Slot and port assignment 10
3.4 Terminal diagram 11

4 Incoming acceptance and product identification 12
4.1 Incoming acceptance 12
4.2 Product identification 12
4.3 Scope of delivery 13
4.4 Certificates and approvals 13

5 Installation 15
5.1 Installation conditions 15
5.2 Mounting the measuring device 16
5.3 Post-installation check 19

6 Electrical connection 20
6.1 Connection conditions 20
6.2 Connecting the measuring device 21
6.3 Connecting the sensors 27
6.4 Connecting additional inputs, outputs or relays 30
6.5 Connecting digital communication 34
6.6 Hardware settings 38
6.7 Ensuring the degree of protection 39
6.8 Post-connection check 40

7 System integration 41
7.1 Web server 41
7.2 Service interface 42
7.3 Fieldbuses 43

8 Operation options 45
8.1 Overview 45
8.2 Access to the operating menu via the local display 46
8.3 Configuration options 47

9 Commissioning 50
9.1 Function check 50
9.2 Power up 50
9.3 **User definable screens** 51
9.4 Basic setup 52

10 Operation 53
10.1 Display 53
10.2 General settings 55
10.3 Current inputs 68
10.4 Outputs 69
10.5 Binary inputs and outputs 76
10.6 Additional functions 82

11 Calibration 110

12 Diagnostics and troubleshooting . . 111
12.1 General troubleshooting 111
12.2 Diagnostic information on the local display . . 112
12.3 Diagnostic information via web browser 112
12.4 Diagnostic information via fieldbus 112
12.5 Adapting the diagnostic information 112
12.6 Overview of diagnostic information 114
12.7 Pending diagnostic messages 118
12.8 **Diagnostics list** 118
12.9 Event logbook 118
12.10 **Simulation** 121
12.11 Device test 123
12.12 Resetting the measuring device 123
12.13 Device information 124
12.14 Firmware history 126

13 Maintenance 129
13.1 Cleaning 129

14 Repairs 131
14.1 Spare parts 131
14.2 Return 134
14.3 Disposal 134

15 Accessories 135
15.1 Protective cover 135
15.2 Post mounting kit 135
15.3 Measuring cable 135
15.4 Sensors 135
15.5 Additional functionality 140
15.6 Software 142

15.7 Other accessories 143

16 Technical data 145

16.1 Input 145
16.2 Digital inputs, passive 145
16.3 Current input, passive 145
16.4 Output 146
16.5 Digital outputs, passive 147
16.6 Current outputs, active 148
16.7 Relay outputs 149
16.8 Protocol-specific data 149
16.9 Power supply 151
16.10 Performance characteristics 153
16.11 Environment 153
16.12 Mechanical construction 155

17 Installation and operation in hazardous environment Class I Div. 2 157

Index 158

1 About this document

1.1 Warnings

Structure of information	Meaning
DANGER **Causes (/consequences)** If necessary, Consequences of non-compliance (if applicable) ▶ Corrective action	This symbol alerts you to a dangerous situation. Failure to avoid the dangerous situation **will** result in a fatal or serious injury.
WARNING **Causes (/consequences)** If necessary, Consequences of non-compliance (if applicable) ▶ Corrective action	This symbol alerts you to a dangerous situation. Failure to avoid the dangerous situation **can** result in a fatal or serious injury.
CAUTION **Causes (/consequences)** If necessary, Consequences of non-compliance (if applicable) ▶ Corrective action	This symbol alerts you to a dangerous situation. Failure to avoid this situation can result in minor or more serious injuries.
NOTICE **Cause/situation** If necessary, Consequences of non-compliance (if applicable) ▶ Action/note	This symbol alerts you to situations which may result in damage to property.

1.2 Symbols

Symbol	Meaning
	Additional information, tips
	Permitted or recommended
	Not permitted or not recommended
	Reference to device documentation
	Reference to page
	Reference to graphic
	Result of a step

1.3 Symbols at the device

Symbol	Meaning
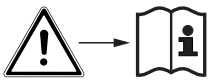	Reference to device documentation

1.4 Documentation

The following instructions complement these Operating Instructions and are available on the product pages on the internet:

- Brief Operating Instructions Liquiline CM44x, KA01159C
- Operating Instructions Memosens, BA01245C
  - Software description for Memosens inputs
  - Calibration of Memosens sensors
  - Sensor-specific diagnostics and troubleshooting
- Operating Instructions for HART communication, BA00486C
  - Onsite settings and installation instructions for HART
  - Description of HART driver
- Guidelines for communication via fieldbus and web server
  - HART, SD01187C
  - PROFIBUS, SD01188C
  - Modbus, SD01189C
  - Web server, SD01190C
  - EtherNet/IP, SD01293C

2 Basic safety instructions

2.1 Requirements for personnel

- Installation, commissioning, operation and maintenance of the measuring system may be carried out only by specially trained technical personnel.
- The technical personnel must be authorized by the plant operator to carry out the specified activities.
- The electrical connection may be performed only by an electrical technician.
- The technical personnel must have read and understood these Operating Instructions and must follow the instructions contained therein.
- Faults at the measuring point may only be rectified by authorized and specially trained personnel.

Repairs not described in the Operating Instructions provided must be carried out only directly at the manufacturer's site or by the service organization.

2.2 Designated use

2.2.1 Non-hazardous atmosphere

Liquiline CM44x is a multichannel controller for connecting digital sensors with Memosens technology in non-hazardous environments.

The device is designed for use in the following applications:
- Water and wastewater
- Power stations
- Chemical industry
- Other industrial applications

2.2.2 Hazardous environment in accordance with cCSAus Class I Div. 2

▶ Please pay attention to the control drawing and specified operating conditions in the appendix of this manual and follow the instructions.

2.2.3 Non-designated use

Use of the device for any purpose other than that described, poses a threat to the safety of people and of the entire measuring system and is therefore not permitted.

The manufacturer is not liable for damage caused by improper or non-designated use.

2.3 Occupational safety

As the user, you are responsible for complying with the following safety conditions:
- Installation guidelines
- Local standards and regulations
- Regulations for explosion protection

Electromagnetic compatibility
- The product has been tested for electromagnetic compatibility in accordance with the applicable European standards for industrial applications.
- The electromagnetic compatibility indicated applies only to a product that has been connected in accordance with these Operating Instructions.

2.4 Operational safety

Before commissioning the entire measuring point:

1. Verify that all connections are correct.
2. Ensure that electrical cables and hose connections are undamaged.
3. Do not operate damaged products, and protect them against unintentional operation.
4. Label damaged products as defective.

During operation:

- If faults cannot be rectified:
  products must be taken out of service and protected against unintentional operation.

⚠ CAUTION

Cleaning not switched off during calibration or maintenance activities
Risk of injury due to medium or cleaning agent!

- If a cleaning system is connected, switch it off before removing a sensor from the medium.
- If you wish to check the cleaning function and have therefore not switched off the cleaning system, wear protective clothing, goggles and gloves or take other appropriate measures.

2.5 Product safety

2.5.1 State of the art

The product is designed to meet state-of-the-art safety requirements, has been tested, and left the factory in a condition in which it is safe to operate. The relevant regulations and European standards have been observed.

2.5.2 IT security

We only provide a warranty if the device is installed and used as described in the Operating Instructions. The device is equipped with security mechanisms to protect it against any inadvertent changes to the device settings.

IT security measures in line with operators' security standards and designed to provide additional protection for the device and device data transfer must be implemented by the operators themselves.

3 Device description

3.1 Housing closed

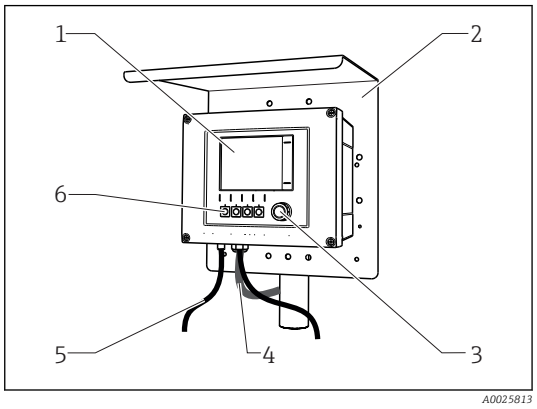

1 *Mounted on a post*

1 *Display*
2 *Weather protection cover (optional)*
3 *Navigator*
4 *Sensor cable or current output cable*
5 *Power supply cable*
6 *Soft keys, assignment depends on menu*

3.2 Housing open

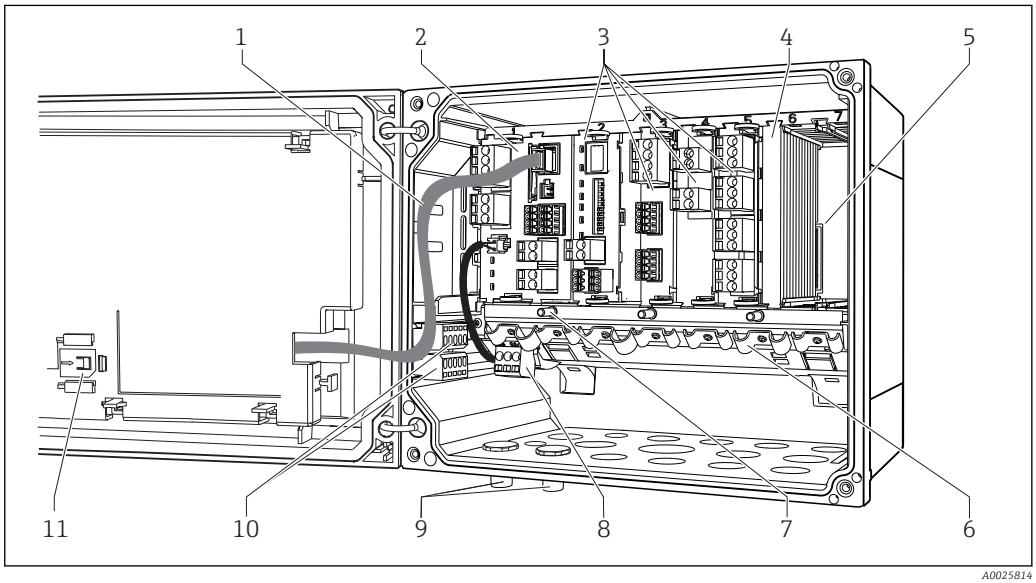

2 *Example of a four-channel device with an open display cover (without wiring)*

1	*Display cable*	7	*Threaded bolt for protective ground connection*
2	*Basic module*	8	*Extension power unit with internal cable*
3	*Extension modules (optional)*	9	*M12 connectors for sensor connection (optional)*
4	*Shock protection, dummy cover and end cover*	10	*Distributor terminals for user-defined use* [1)]
5	*Extension backplane*	11	*Storage slot for SD card*
6	*Cable mounting rail*		

1) Example: you want to loop the signal from the alarm relay to a siren and a lamp. The terminals on the alarm relay only accommodate one cable. Route the signal from the alarm relay to a terminal on the distributor block. The block's terminals are all interconnected. You therefore have 3 additional terminals on this block from where you can carry the signal forward to the consumer (siren, lamp etc.). The signal can be multiplied in this way.

3.3 Slot and port assignment

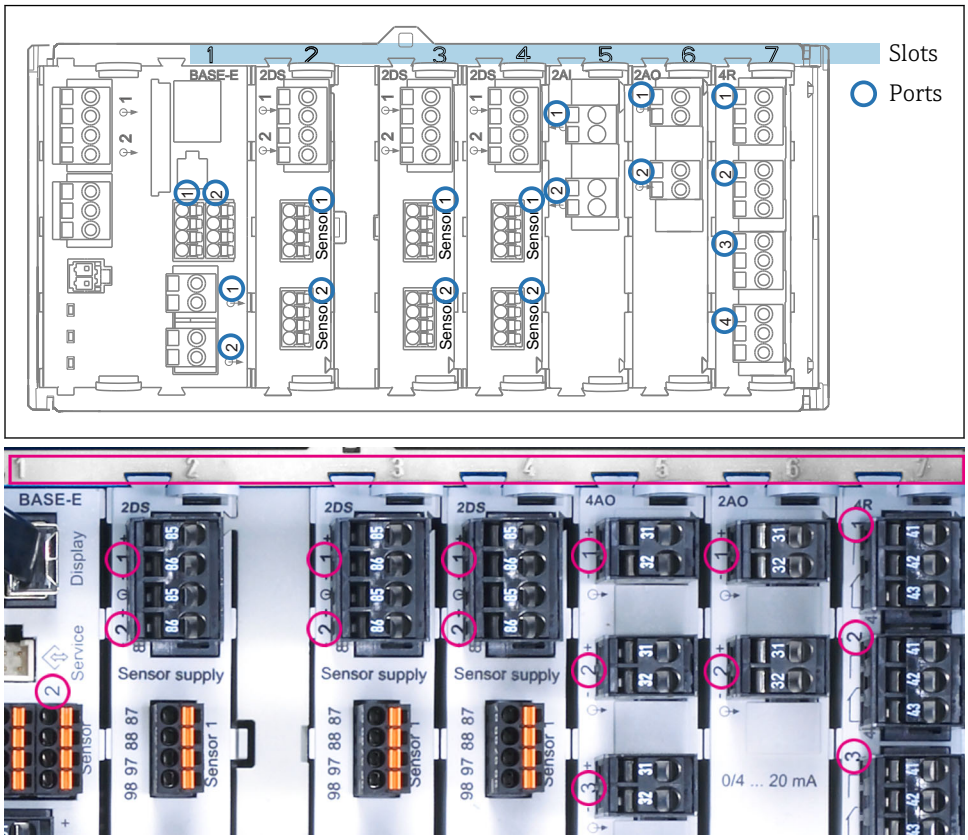

3 *Slot and port assignment of the hardware modules*

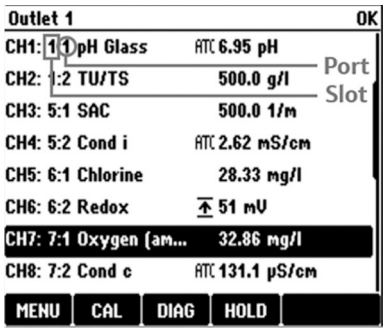

4 *Slot and port assignment on the display*

- Inputs are assigned to measuring channels in the ascending order of the slots and ports.
  Adjacent example:
  "CH1: 1:1 pH glass" means:
  Channel 1 (CH1) is slot 1 (basic module) : Port 1 (input 1), pH glass sensor
- Outputs and relays are named according to their function, e.g. "current output", and are displayed with the slot and port numbers in ascending order

3.4 Terminal diagram

The unique terminal name is derived from:

Slot no. : Port no. : Terminal

Example, NO contact of a relay

Device with 4 inputs for digital sensors, 4 current outputs and 4 relays

- Base module BASE-E (contains 2 sensor inputs, 2 current outputs)
- 2DS module (2 sensor inputs)
- 2AO module (2 current outputs)
- 4R module (4 relays)

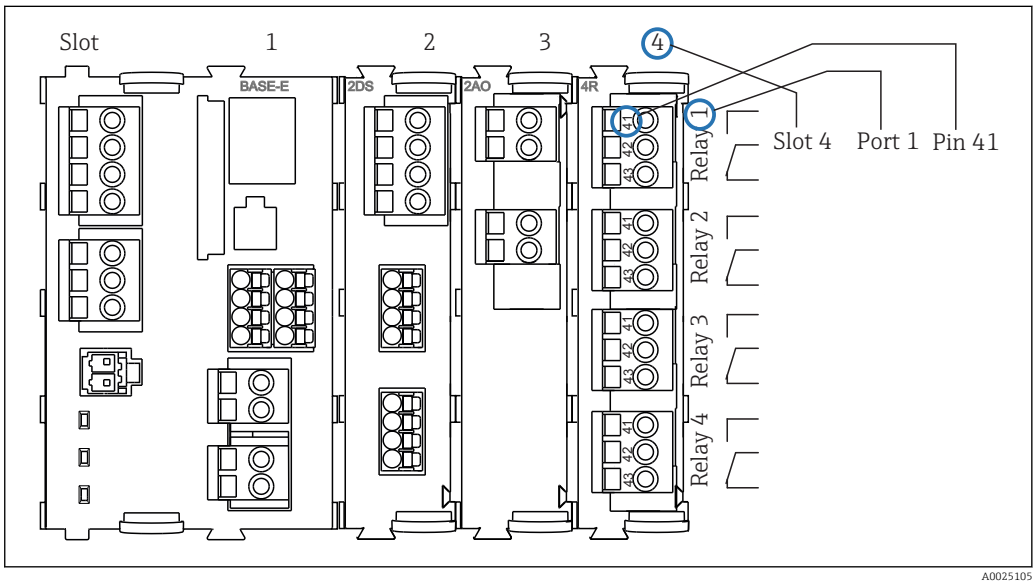

5 *Creating a terminal diagram using the example of the NO contact (terminal 41) of a relay*

4 Incoming acceptance and product identification

4.1 Incoming acceptance

1. Verify that the packaging is undamaged.
   ↳ Notify the supplier of any damage to the packaging.
   Keep the damaged packaging until the issue has been resolved.
2. Verify that the contents are undamaged.
   ↳ Notify the supplier of any damage to the delivery contents.
   Keep the damaged goods until the issue has been resolved.
3. Check that the delivery is complete and nothing is missing.
   ↳ Compare the shipping documents with your order.
4. Pack the product for storage and transportation in such a way that it is protected against impact and moisture.
   ↳ The original packaging offers the best protection.
   Make sure to comply with the permitted ambient conditions.

If you have any questions, please contact your supplier or your local Sales Center.

4.2 Product identification

4.2.1 Nameplate

The nameplate provides you with the following information on your device:
- Manufacturer identification
- Order code
- Extended order code
- Serial number
- Firmware version
- Ambient and process conditions
- Input and output values
- Activation codes
- Safety information and warnings

▶ Compare the information on the nameplate with the order.

4.2.2 Product identification

Product page

www.endress.com/cm442

www.endress.com/cm444

www.endress.com/cm448

Interpreting the order code

The order code and serial number of your product can be found in the following locations:
- On the nameplate
- In the delivery papers

Obtaining information on the product

1. Open the product website.

2. At the top of the page, select the link **Product tools**.
   ↳ An additional sidebar opens up.
3. Select **Online Tools** followed by **Access device specific information**.
   ↳ An additional window opens.
4. Enter the order code from the nameplate into the search field. Then select **Show details**.
   ↳ Details of each feature (selected option) of the order code are displayed.

Manufacturer's address

Endress+Hauser Conducta GmbH+Co. KG
Dieselstraße 24
D-70839 Gerlingen

4.3 Scope of delivery

The scope of delivery comprises:
- 1 multichannel controller in the version ordered
- 1 mounting plate
- 1 wiring label (attached at the factory to the inside of the display cover)
- 1 printed copy of the Brief Operating Instructions in the language ordered

▶ If you have any queries:
Please contact your supplier or local sales center.

4.4 Certificates and approvals

4.4.1 CE mark

The product meets the requirements of the harmonized European standards. As such, it complies with the legal specifications of the EU directives. The manufacturer confirms successful testing of the product by affixing to it the CE mark.

4.4.2 EAC

The product has been certified according to guidelines TP TC 004/2011 and TP TC 020/2011 which apply in the European Economic Area (EEA). The EAC conformity mark is affixed to the product.

4.4.3 cCSAus

The device complies with the requirements defined in:
- CLASS 2252 06 - Process Control Equipment
- CLASS 2252 86 - Process Control Equipment - Certified to US Standards
- CLASS 2258 03 - Process Control Equipment - Intrinsically Safe and Non-incendive Systems - For Hazardous Locations
- CLASS 2258 83 - Process Control Equipment - Intrinsically Safe and Non-incendive Systems - For Hazardous Locations - Certified to US Standards
- FM3600
- FM3611
- FM3810
- ANSI/ISA NEMA250
- IEC 60529
- CAN/CSA-C22.2 No. 0
- CAN/CSA C22.2 No. 94
- CSA Std. C22.2 No. 213

- CAN/CSA-C22.2 No. 61010-1
- CAN/CSA-C22.2 No. 60529
- UL/ANSI/ISA 61010-1
- ANSI - ISA 12 12 01

4.4.4 MCERTS

CM442 only
The device has been assessed by Sira Certification Service and complies with "MCERTS Performance Standards for Continuous Water Monitoring Equipment, Part 2: online analysers, Version 3.1, dated August 2010"; Certificate No.: Sira MC140246/01.

5 Installation

5.1 Installation conditions

5.1.1 Dimensions

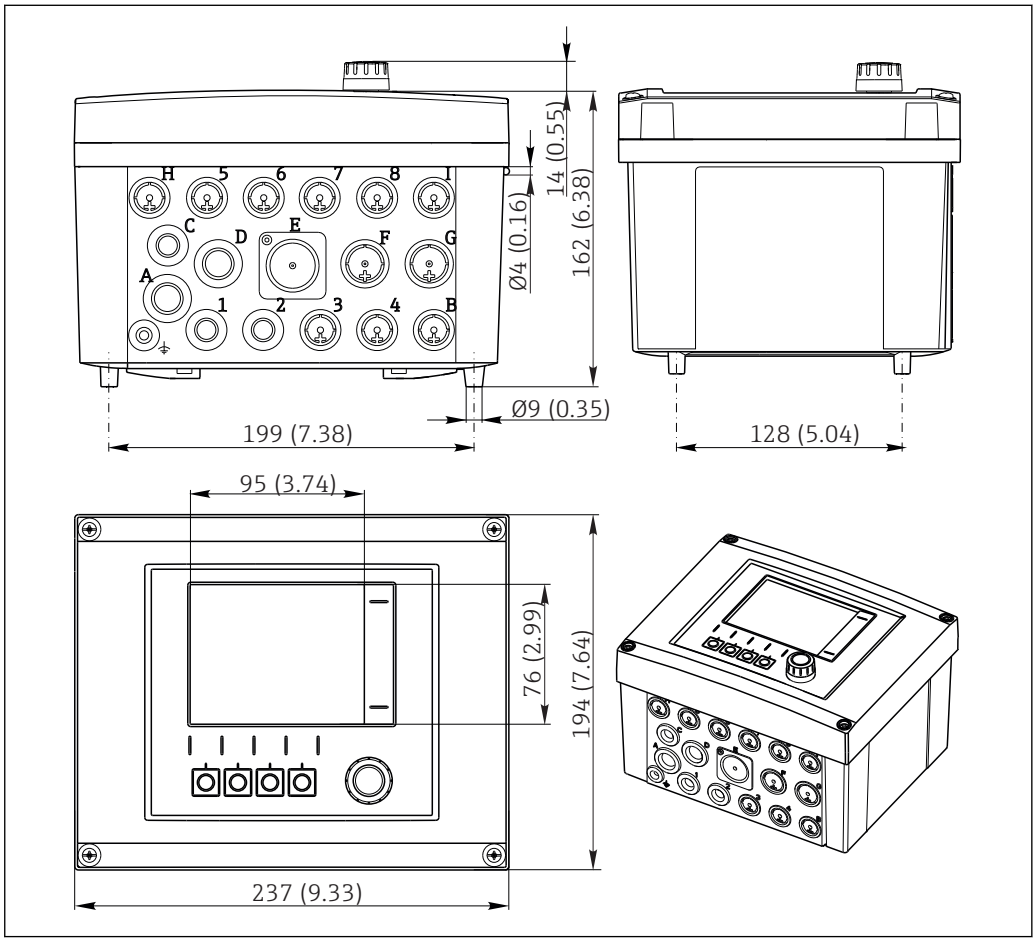

6 *Dimensions of field housing in mm (inch)*

5.1.2 Mounting plate

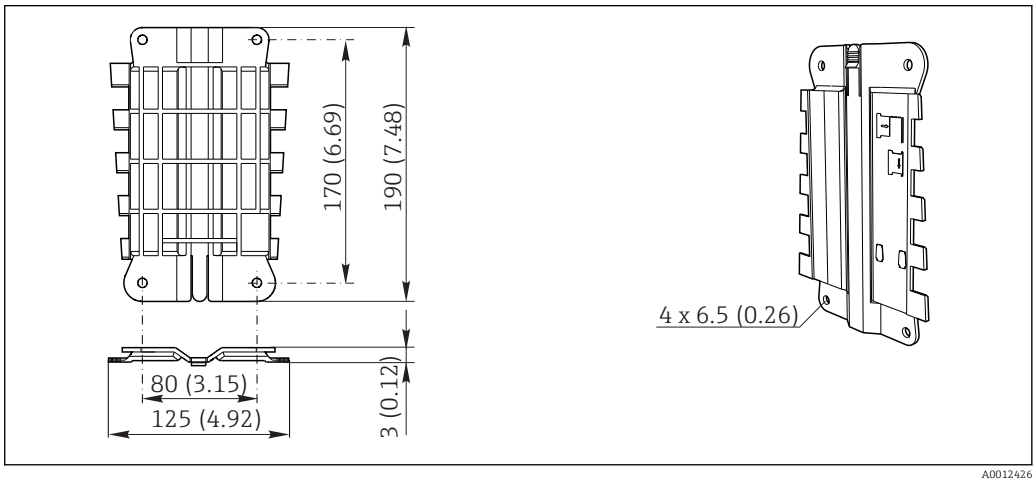

7 *Mounting plate, dimensions in mm (in)*

5.1.3 Protective cover

NOTICE

Effect of climatic conditions (rain, snow, direct sunlight etc.)
Impaired operation to complete transmitter failure are possible!
- ▶ Always use the weather protection cover (accessory) when installing the device outdoors.

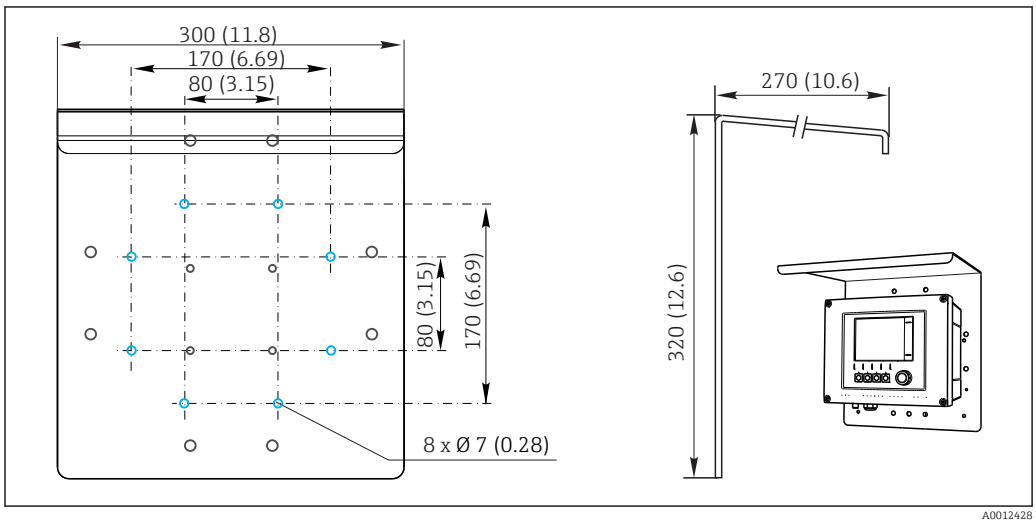

8 *Dimensions in mm (in)*

5.2 Mounting the measuring device

5.2.1 Post mounting

You require the post mounting kit (optional) to mount the unit on a pipe, post or railing (square or circular, clamping range 20 to 61 mm (0.79 to 2.40")).

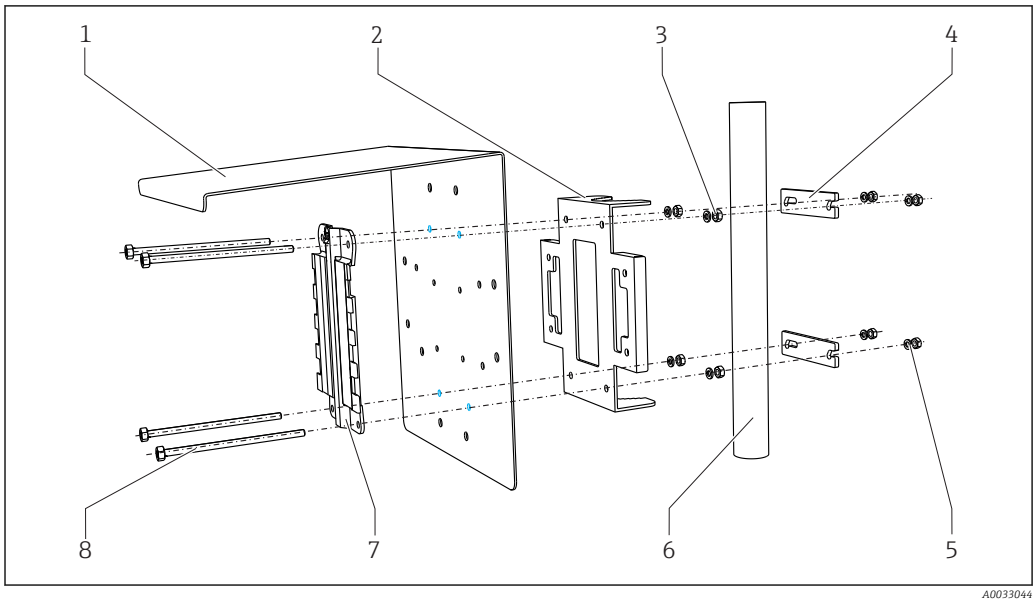

9 *Post mounting*

1	*Weather protection cover (optional)*	5	*Spring washers and nuts (post mounting kit)*
2	*Post mounting plate (post mounting kit)*	6	*Pipe or railing (circular/square)*
3	*Spring washers and nuts (post mounting kit)*	7	*Mounting plate*
4	*Pipe clamps (post mounting kit)*	8	*Threaded rods (post mounting kit)*

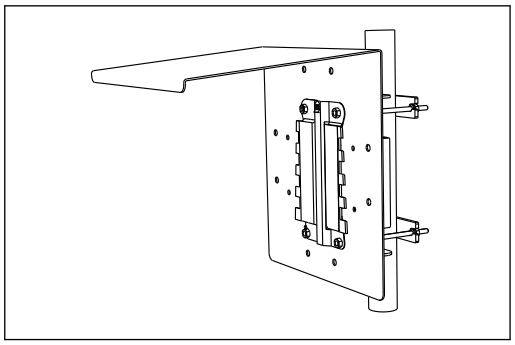

10 *Post mounting*

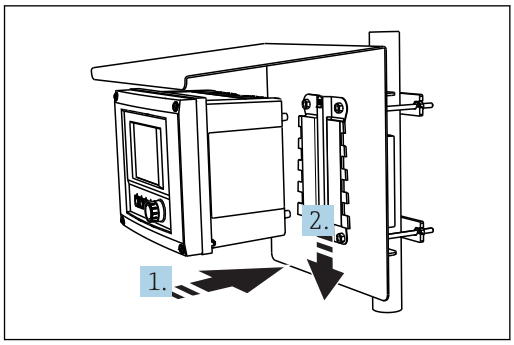

11 *Attach the device and click it into place*

1. Place the device on the mounting plate.
2. Slide the device downwards in the guide on the mounting rail until it clicks into place.

5.2.2 Rail mounting

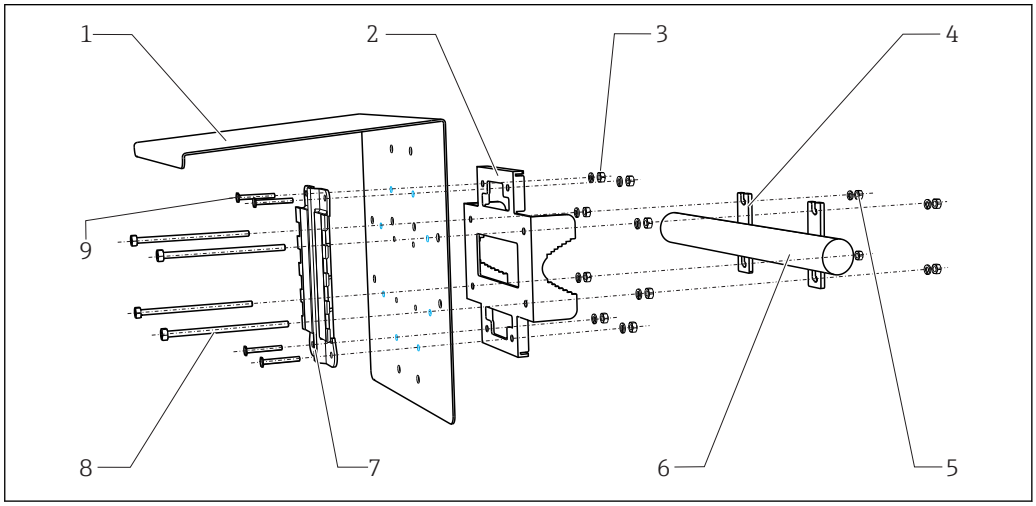

12 *Rail mounting*

1	*Weather protection cover (optional)*	6	*Pipe or railing (circular/square)*
2	*Post mounting plate (post mounting kit)*	7	*Mounting plate*
3	*Spring washers and nuts (post mounting kit)*	8	*Threaded rods (post mounting kit)*
4	*Pipe clamps (post mounting kit)*	9	*Screws (post mounting kit)*
5	*Spring washers and nuts (post mounting kit)*		

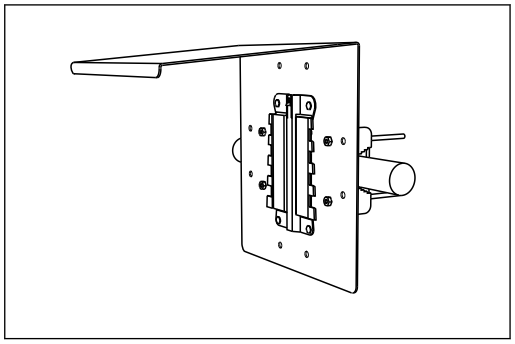

13 *Rail mounting*

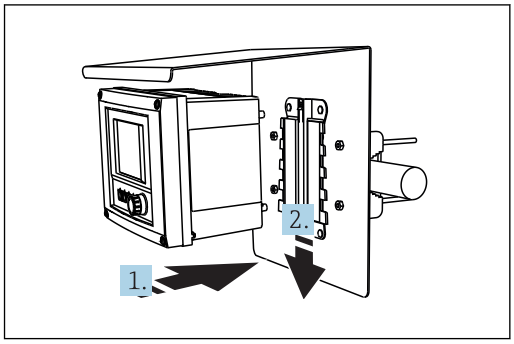

14 *Attach the device and click it into place*

1. Place the device on the mounting plate.
2. Slide the device downwards in the guide on the mounting rail until it clicks into place.

5.2.3 Wall mounting

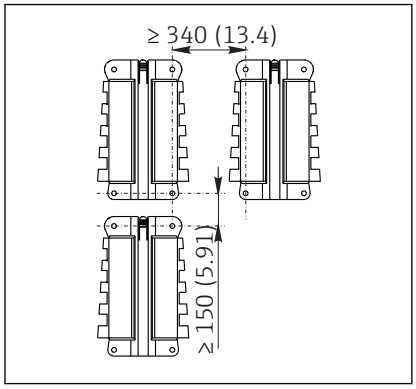

15 *Installation clearance in mm (in)*

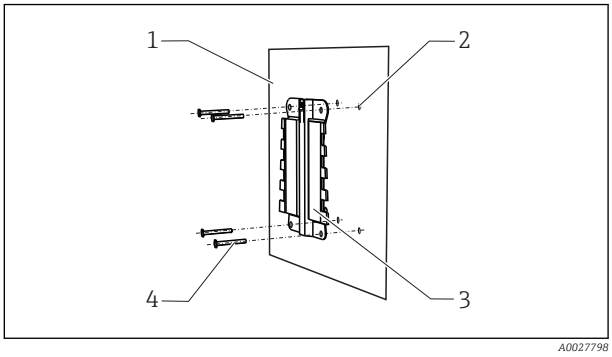

16 *Wall mounting*

1 *Wall*
2 *4 drill holes* [1]
3 *Mounting plate*
4 *Screws Ø 6 mm (not part of scope of supply)*

[1] *The size of the drill holes depends on the wall plugs used. The wall plugs and screws must be provided by the customer.*

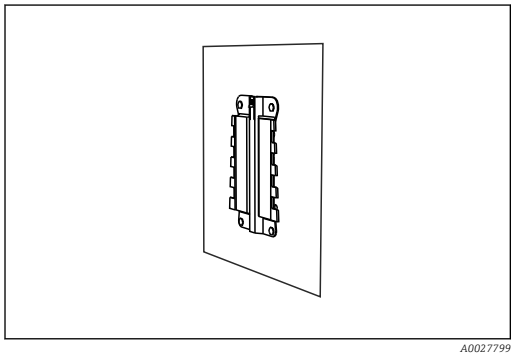

17 *Wall mounting*

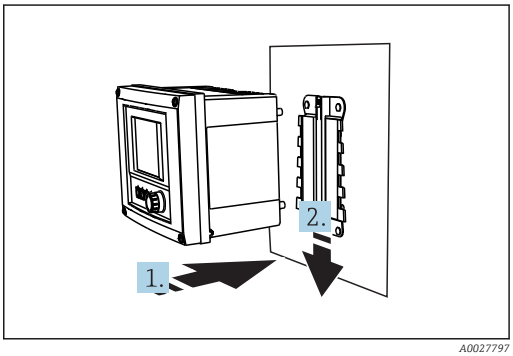

18 *Attach the device and click it into place*

1. Place the device on the mounting plate.
2. Slide the device downwards in the guide on the mounting rail until it clicks into place.

5.2.4 Disassembly (for conversion, cleaning etc.)

NOTICE

The device can be damaged if dropped

▶ When pushing the housing out of the holder, secure the housing to prevent it from falling. If possible, ask a second person to help you.

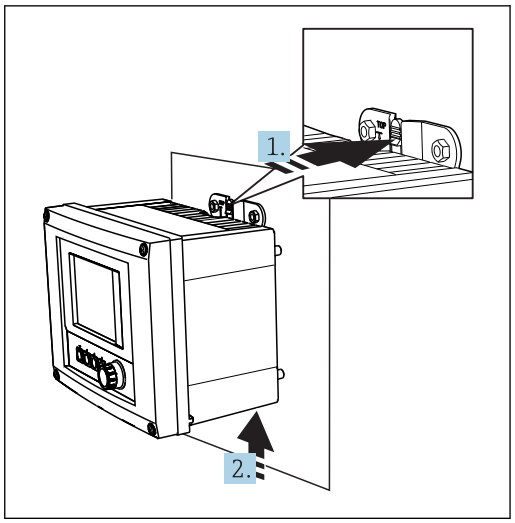

19 *Disassembling*

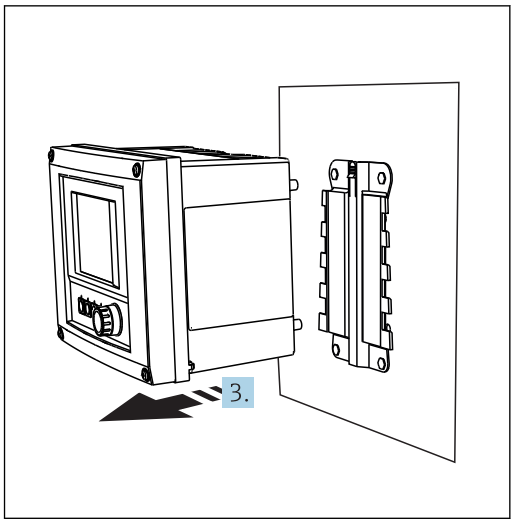

20 *Disassembling*

1. Hold down the latch.
2. Push up the device to remove it from the holder.
3. Remove the device towards the front.

5.3 Post-installation check

1. After installation, check the transmitter for damage.
2. Check whether the transmitter is protected against precipitation and direct sunlight (e.g. by the weather protection cover).

6 Electrical connection

6.1 Connection conditions

6.1.1 Via HART (e.g. using HART modem and FieldCare)

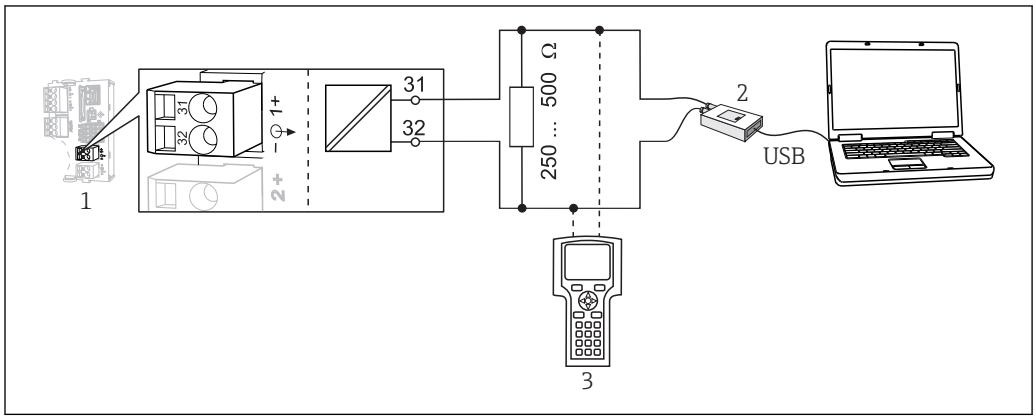

21 HART using modem

1 Device module Base L, H or E: current output 1 with HART
2 HART modem for connection to PC, e.g. Commubox FXA191 (RS232) or FXA195 [1] (USB)
3 HART handheld terminal

[1] Switch position "on" (substitutes the resistor)

6.1.2 Via PROFIBUS DP

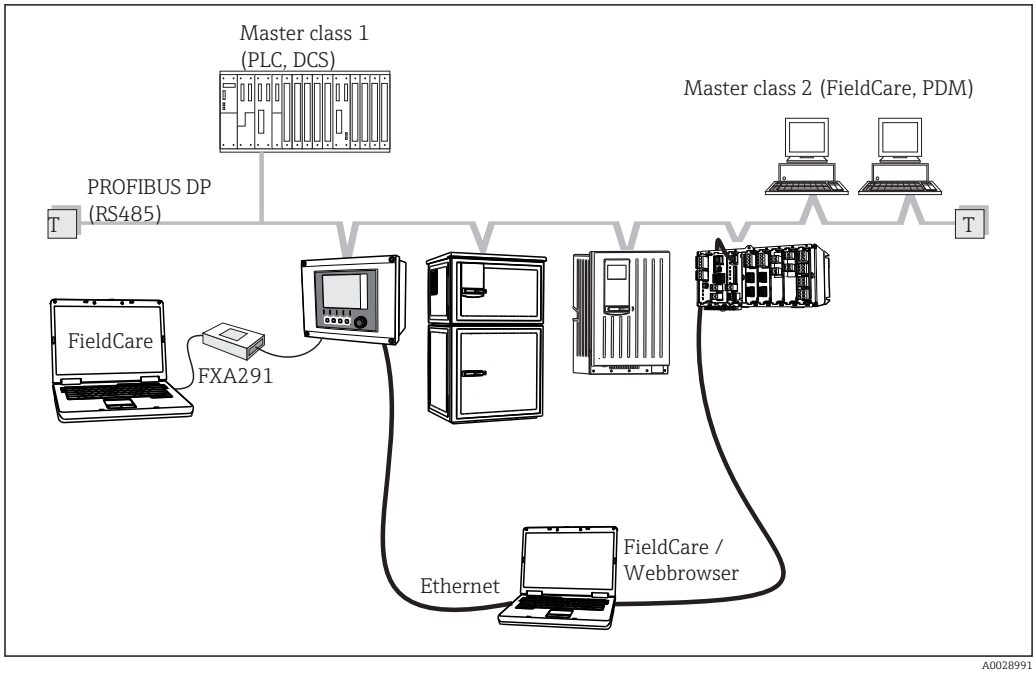

22 PROFIBUS DP

T Terminating resistor

6.1.3 Via Modbus RS485

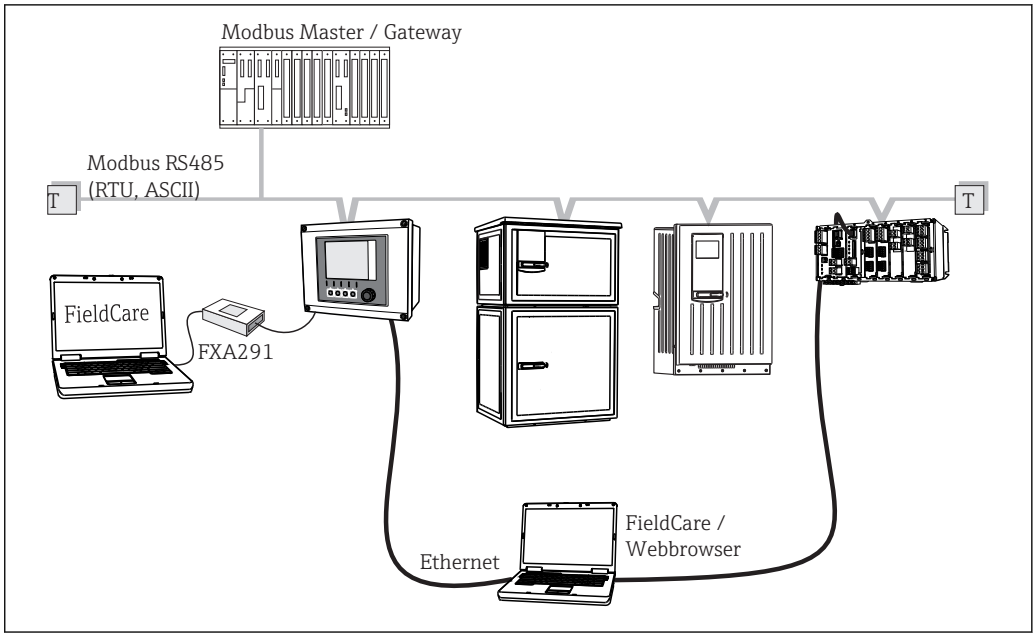

23 Modbus RS485

T Terminating resistor

6.1.4 Via Ethernet/Web server/Modbus TCP/EtherNet/IP

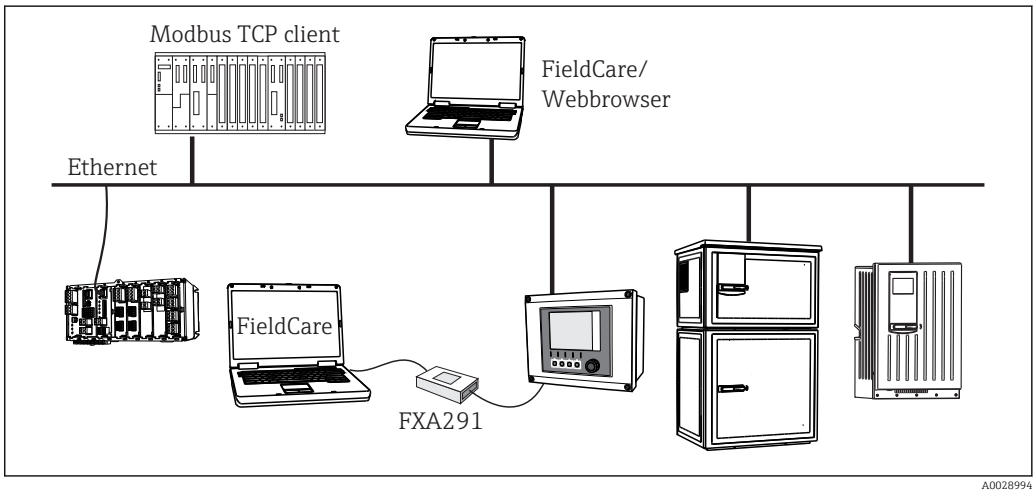

24 Modbus TCP and/or EtherNet/IP

6.2 Connecting the measuring device

WARNING

Device is live!

Incorrect connection may result in injury or death!

- The electrical connection may be performed only by an electrical technician.
- The electrical technician must have read and understood these Operating Instructions and must follow the instructions contained therein.
- **Prior** to commencing connection work, ensure that no voltage is present on any cable.

NOTICE

The device does not have a power switch!

- Provide a protected circuit breaker in the vicinity of the device at the place of installation.
- The circuit breaker must be a switch or power switch, and must be labeled as the circuit breaker for the device.
- At the supply point, the power supply must be isolated from dangerous live cables by double or reinforced insulation in the case of devices with a 24 V supply voltage.

6.2.1 Open the housing

NOTICE

Pointed or sharp tools

If unsuitable tools are used, they can scratch the housing or damage the seal, and thus have a negative impact on the leak-tightness of the housing!

- Do not use any sharp or pointed objects, such as a knife, to open the housing.
- Only use a suitable Phillips screwdriver.

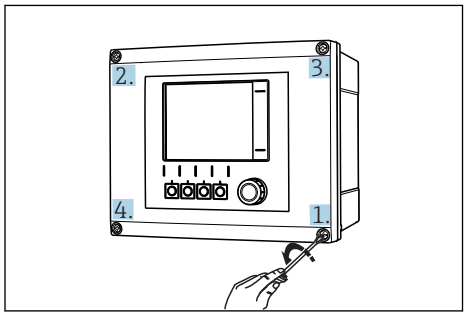

25 *Releasing housing screws in a diagonally opposite sequence with Phillips screwdriver*

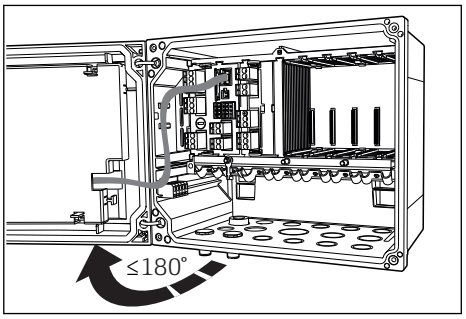

26 *Opening display cover, max. opening angle 180 ° (depends on installation position)*

1. Release the housing screws on a step-by-step basis. Start with any screw of your choice. Then release the screw diagonally opposite this screw etc.
2. To close the housing: tighten the screws in a similar step-by-step, diagonally opposite sequence.

6.2.2 Cable mounting rail

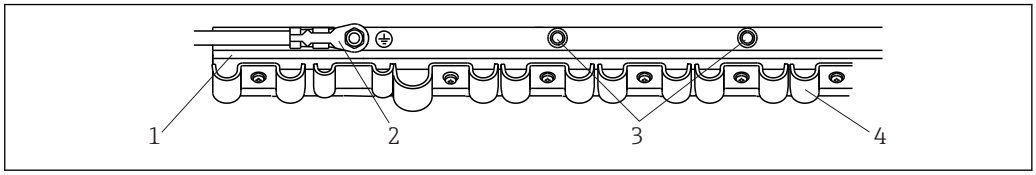

27 Cable mounting rail and associated function

1 Cable mounting rail
2 Threaded bolt (protective ground connection, central grounding point)
3 Additional threaded bolts for ground connections
4 Cable clamps (fixing and grounding the sensor cables)

6.2.3 Connecting the cable shield

If possible, only use terminated original cables. The sensor, fieldbus and ethernet cables must be shielded.

Cable sample (does not necessarily correspond to the original cable supplied)

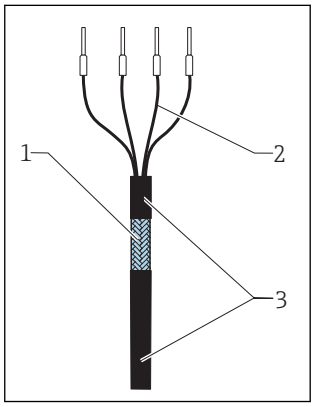

28 Terminated cable

1 Outer shield (exposed)
2 Cable cores with ferrules
3 Cable sheath (insulation)

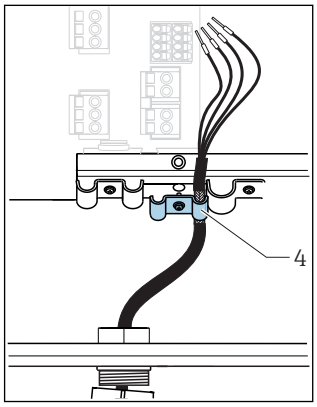

29 Inserting the cable

4 Grounding clip

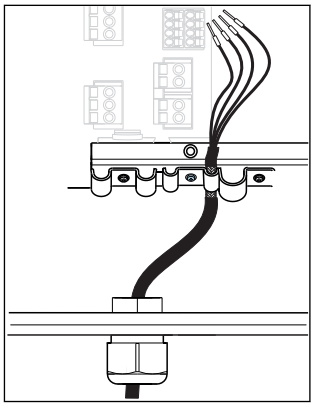

30 Tighten screw (2 Nm)

The cable shield is grounded using the grounding clamp. [1)]

1) Please note the instructions in the "Ensuring the degree of protection" section. (→ 39)

1. Release a suitable cable gland on the bottom of the housing and remove the dummy plug.
2. Making sure the gland is facing the right direction, thread the gland onto the cable end and pull the cable through the entry and into the housing.
3. Route the cable in the housing in such a way that the **exposed** cable shield fits into one of the cable clamps and the cable cores can be easily routed as far as the connection plug on the electronics module.
4. Open the cable clamp and clamp the cable in place. Then tighten the screw of the cable clamp again.
5. Connect cable cores as per the wiring diagram.
6. Tighten the cable gland from outside.

6.2.4 Cable terminals

Plug-in terminals for Memosens and PROFIBUS/RS485 connections

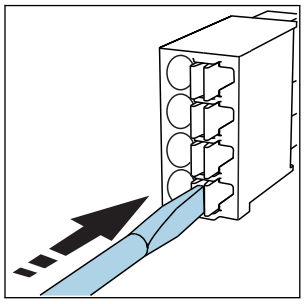

▶ Press the screwdriver against the clip (opens the terminal).

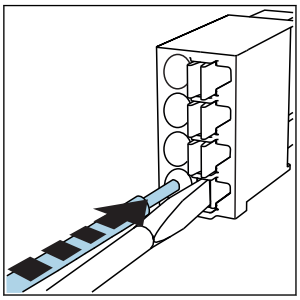

▶ Insert the cable until the limit stop.

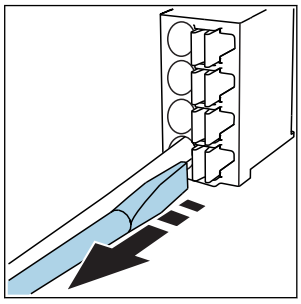

▶ Remove the screwdriver (closes the terminal).

After connection, make sure that every cable end is securely in place. Terminated cable ends, in particular, tend to come loose easily if they have not been correctly inserted as far as the limit stop.

All other plug-in terminals

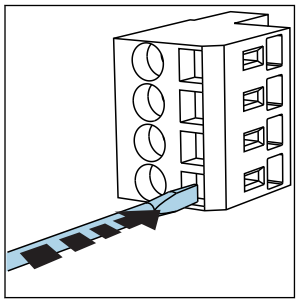

▶ Press the screwdriver against the clip (opens the terminal).

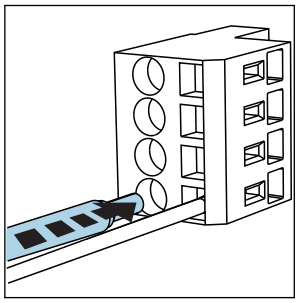

▶ Insert the cable until the limit stop.

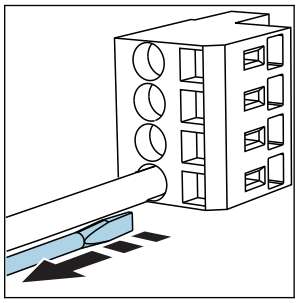

▶ Remove the screwdriver (closes the terminal).

6.2.5 Connecting the supply voltage for the CM442

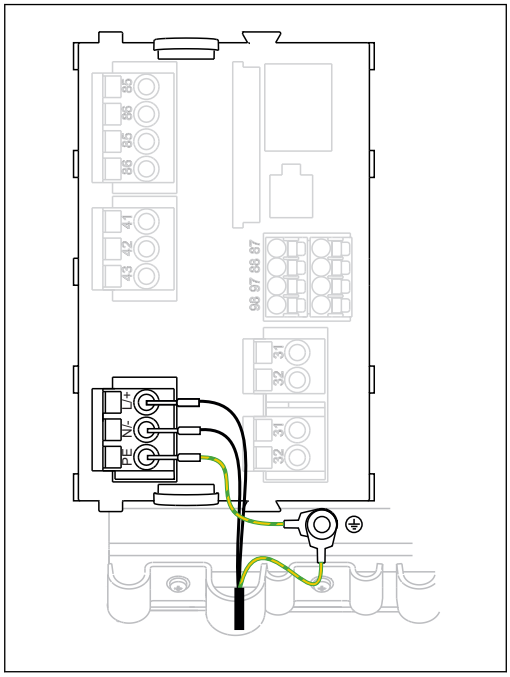

31 *Connecting power supply on the BASE-H or -L*

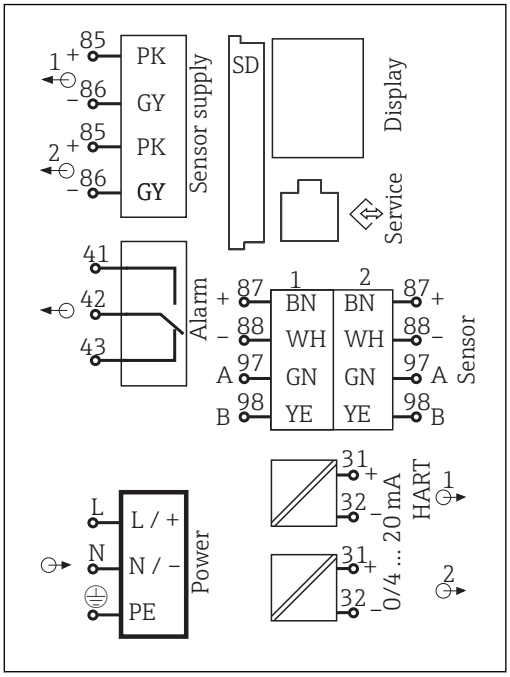

32 *Overall wiring diagram for BASE-H or -L*

H Power unit 100 to 230 VAC
L Power unit 24 VAC or 24 VDC

Connecting the supply voltage

1. Route the power supply cable into the housing through the suitable cable entry.
2. Step 2 applies **only to the 100 to 230 V AC power unit**.
   Connect the protective ground of the power unit to the threaded bolt specially provided on the cable mounting rail.
3. Protective ground or grounding provided by customer **(absolutely essential for 24 V power unit, additionally recommended for 100 to 230 V AC power unit)**: Provide a ground cable (min. 0.75 mm² (corresponding to 18 AWG))[1]! Guide the ground cable also through the cable entry and connect it to the threaded bolt on the cable mounting rail.
4. Connect the cable cores L and N (100 to 230 V AC) or + and - (24 V DC) to the plug-in terminals on the power unit in accordance with the wiring diagram.

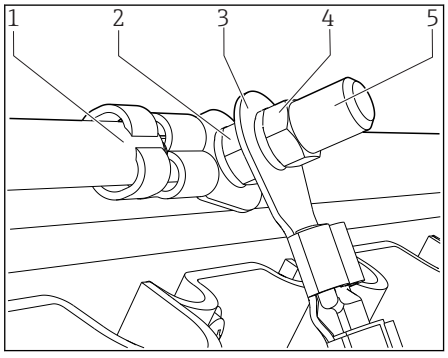

33 *Protective ground or grounding connection*

1 Protective ground of power unit
2 Serrated washer and nut
3 Protective ground / ground cable, provided by customer (min. 0.75 mm² (≙ 18 AWG)) 1)
4 Serrated washer and nut
5 Mounting bolts

1) For a fuse with a rating of 10 A. For a fuse with a rating of 16 A, the protective ground / ground cable must have a cross-sectional area of at least 1.5 mm² (≙ 14 AWG).

NOTICE

Protective ground/ground cable with end sleeve or open cable lug

The cable can become loose. Loss of the protective function!

- ▶ To connect the protective ground or ground cable to the threaded bolt, only use a cable with a closed cable lug as per DIN 46211, 46225, form A.
- ▶ Never connect the protective ground or ground cable to the threaded bolt with an end sleeve or an open cable lug!

6.2.6 Connecting the supply voltage for the CM444 and the CM448

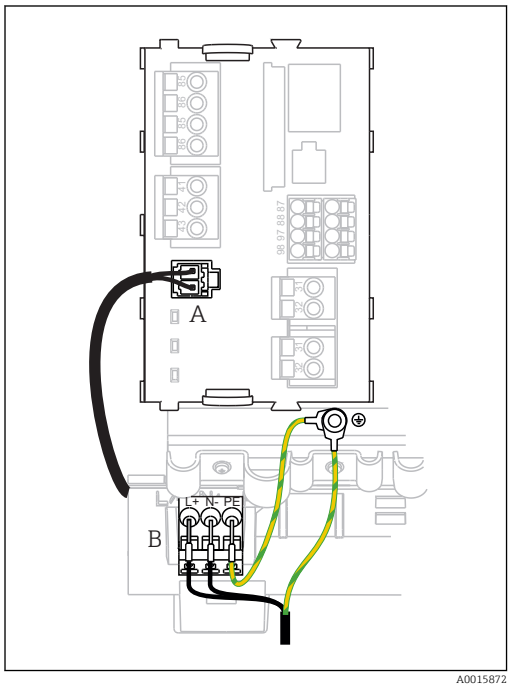

34 *Power supply connection on the BASE-E*

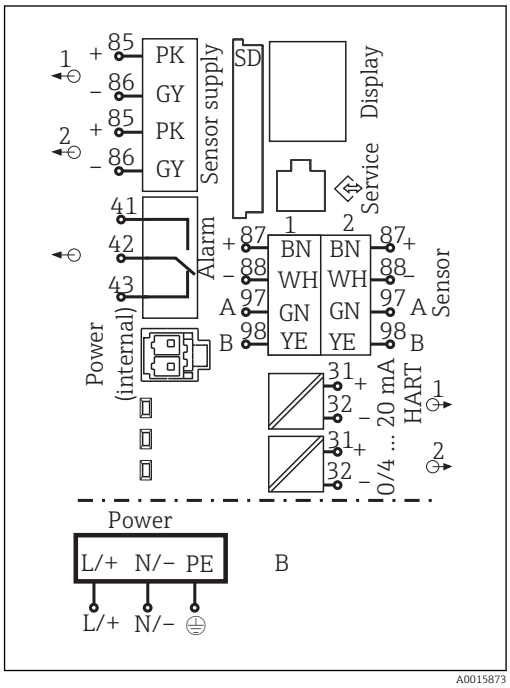

35 *Overall wiring diagram BASE-E and extension power unit (B)*

A Internal power supply cable
B Extension power unit

Connecting the supply voltage

1. Route the power supply cable into the housing through the suitable cable entry.
2. Step 2 applies **only to the 100 to 230 V AC power unit**.
   Connect the protective ground of the power unit to the threaded bolt specially provided on the cable mounting rail.
3. Protective ground or grounding provided by customer **(absolutely essential for 24 V power unit, additionally recommended for 100 to 230 V AC power unit)**: Provide a ground cable (min. 0.75 mm^2 (corresponding to 18 AWG))[1]! Guide the ground cable also through the cable entry and connect it to the threaded bolt on the cable mounting rail.
4. Connect the cable cores L and N (100 to 230 V AC) or + and - (24 V DC) to the plug-in terminals on the power unit in accordance with the wiring diagram.

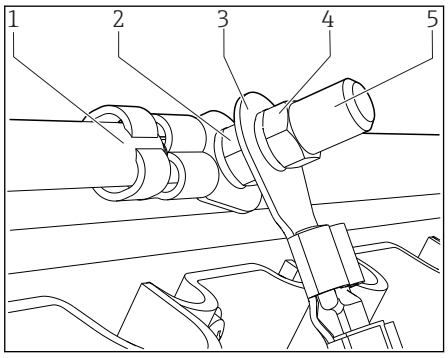

1 *Protective ground of power unit*
2 *Serrated washer and nut*
3 *Protective ground / ground cable, provided by customer (min. 0.75 mm² (≙ 18 AWG))* [1)]
4 *Serrated washer and nut*
5 *Mounting bolts*

36 Protective ground or grounding connection

1) For a fuse with a rating of 10 A. For a fuse with a rating of 16 A, the protective ground / ground cable must have a cross-sectional area of at least 1.5 mm² (≙ 14 AWG).

NOTICE

Protective ground/ground cable with end sleeve or open cable lug

The cable can become loose. Loss of the protective function!

- ▶ To connect the protective ground or ground cable to the threaded bolt, only use a cable with a closed cable lug as per DIN 46211, 46225, form A.
- ▶ Never connect the protective ground or ground cable to the threaded bolt with an end sleeve or an open cable lug!

6.3 Connecting the sensors

6.3.1 Sensor types with Memosens protocol

Sensors with Memosens protocol

Sensor types	Sensor cable	Sensors
Digital sensors **without** additional internal power supply	With plug-in connection and inductive signal transmission	▪ pH sensors ▪ ORP sensors ▪ Combined sensors ▪ Oxygen sensors (amperometric and optical) ▪ Conductivity sensors with conductive measurement of conductivity ▪ Chlorine sensors (disinfection)
	Fixed cable	Conductivity sensors with inductive measurement of conductivity
Digital sensors with additional internal power supply	Fixed cable	▪ Turbidity sensors ▪ Sensors for interface measurement ▪ Sensors for measuring the spectral absorption coefficient (SAC) ▪ Nitrate sensors ▪ Optical oxygen sensors ▪ Ion-sensitive sensors

The following rule applies if connecting CUS71D sensors:
- CM442
  - Only one CUS71D is possible; an additional sensor is not permitted.
  - The second sensor input may also not be used for another type of sensor.
- CM444
  No restrictions. All the sensor inputs can be used as required.
- CM448
  - If a CUS71D is connected, the number of sensor inputs that can be used is limited to a maximum of 4.
  - Of these, all 4 inputs can be used for CUS71D sensors.
  - Every combination of CUS71D and other sensors is possible, provided that the total number of connected sensors does not exceed 4.

6.3.2 Connecting the sensors

Types of connection
- Direct connection of sensor cable to terminal connector of the sensor module 2DS or of base module L, H or E (→ 37 ff.)
- Optional: Sensor cable plug connected to the M12 sensor socket on the underside of the device
  With this type of connection, the device is already wired at the factory (→ 40).

1. Sensor cable connected directly
   Connect the sensor cable to the Memosens terminal connector of the sensor module 2DS or of base module L, H or E.
2. When connecting via M12 connector
   Connect the sensor connector to an M12 sensor socket which has been previously installed or is supplied on delivery.

Sensor cable connected directly

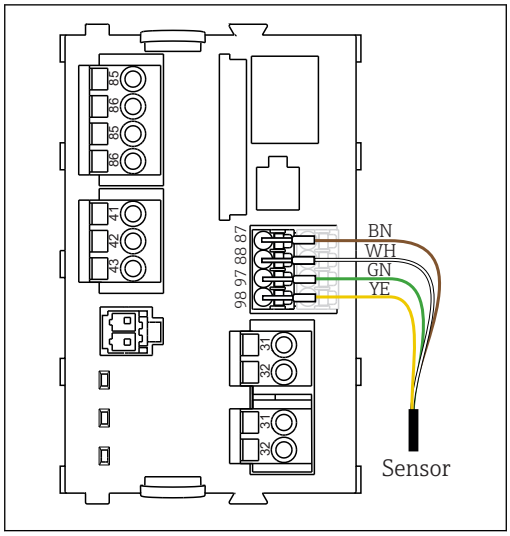

37 *sensors without additional supply voltage*

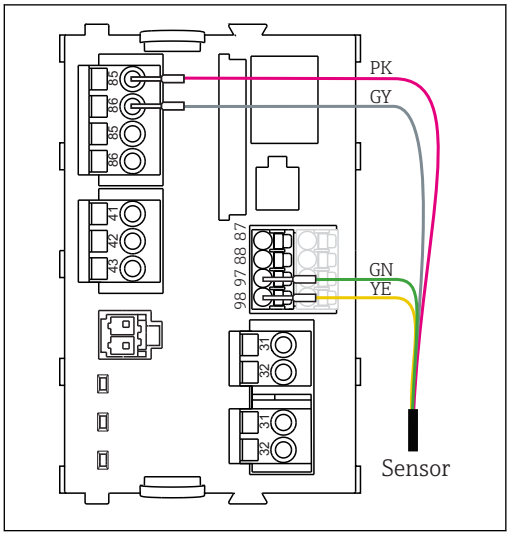

38 *sensors with additional supply voltage*

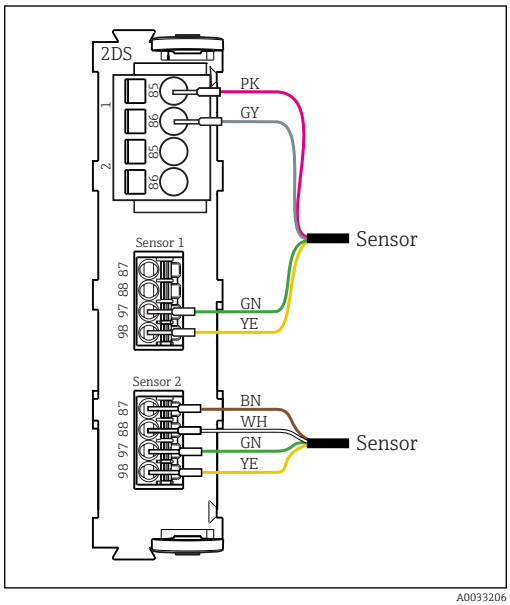

39 *sensors with and without additional supply voltage at sensor module 2DS*

connection via M12 plug-in connection

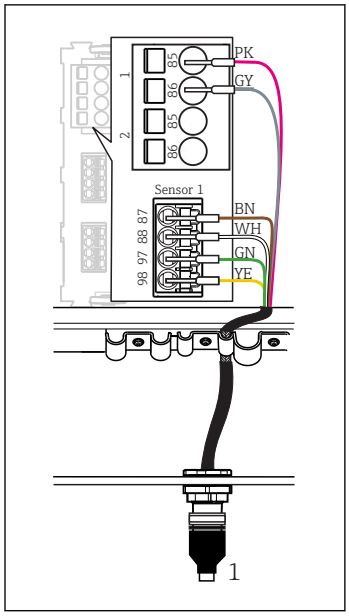

40 M12 plug-in connection (e.g. at sensor module)

1 Sensor cable with M12 connector

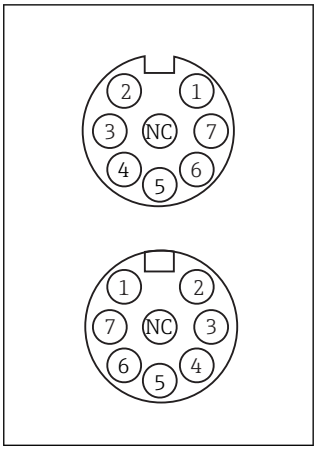

41 M12 assignment Top: socket Bottom: connector (top view in each case)

1 PK (24 V)
2 GY (Ground 24 V)
3 BN (3 V)
4 WH (Ground 3 V)
5 GN (Memosens)
6 YE (Memosens)
7, NC Not connected

Device versions with a pre-installed M12 socket are ready-wired upon delivery.

Version without a pre-installed M12 socket

1. Insert an M12 socket (accessory) into a suitable opening in the base of the housing.
2. Connect the cable to a Memosens terminal as per the wiring diagram.

Connecting the sensor

- Plug the connector of the sensor cable (→ 40item 1) directly into the M12 socket.

Please note the following:
- The internal device wiring is always the same regardless of what kind of sensor you connect to the M12 socket (plug&play).
- The signal or power supply cables are assigned in the sensor head in such a way that the PK and GY power supply cables are either used (e.g. optical sensors) or not (e.g. pH or ORP sensors).

6.4 Connecting additional inputs, outputs or relays

WARNING

Module not covered

No shock protection. Danger of electric shock!

- Change or extend the hardware: always fill the slots from left to right. Do not leave any gaps.
- If all of the slots are not occupied: always insert a dummy cover or end cover in the slot to the right of the last module(→ 2, 9). This ensures that the unit is shock-protected.
- Always ensure shock protection is guaranteed particularly in the case of relay modules (2R, 4R, AOR).

- If additional shields are required, connect them with PE centrally in the control cabinet via terminal blocks supplied by the customer.

6.4.1 Digital inputs and outputs

DIO module

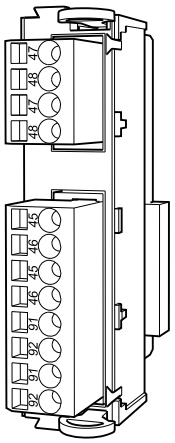

42 Module

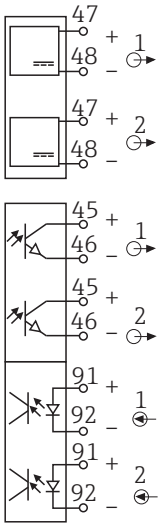

43 Wiring diagram

6.4.2 Current inputs

Module 2AI

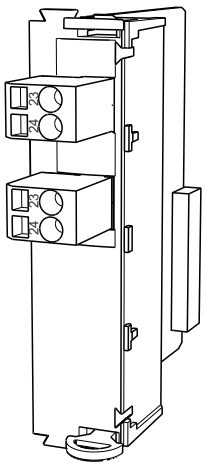

44 Module

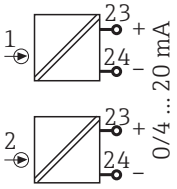

45 Wiring diagram

6.4.3 Current outputs

2AO		4AO	
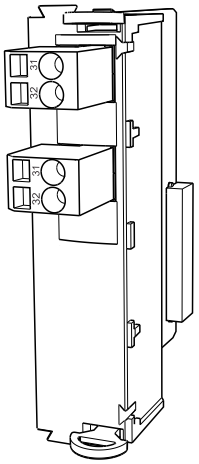	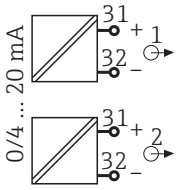	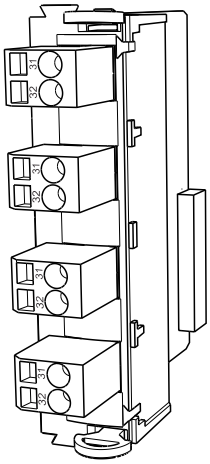	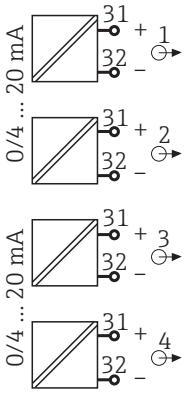
46 Module	47 Wiring diagram	48 Module	49 Wiring diagram

6.4.4 Relay

Module 2R		Module 4R	
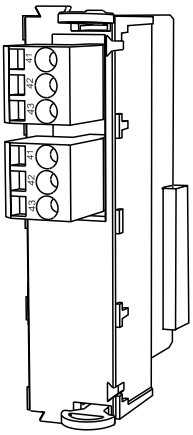	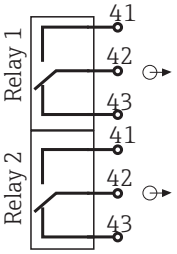	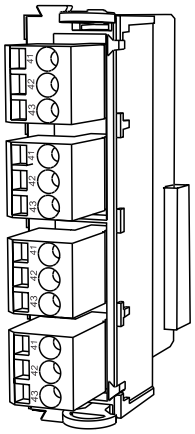	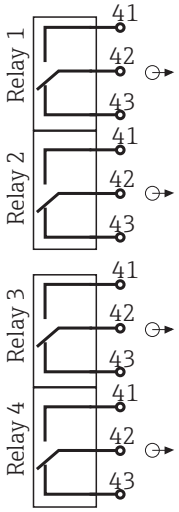
50 Module	51 Wiring diagram	52 Module	53 Wiring diagram

Example: Connecting the cleaning unit 71072583 for CAS40D

NOTICE

Power consumption too high for the Liquiline alarm relay!

Can cause irreparable damage to the base module

- Connect the cleaning unit only to terminals of an additional module (AOR, 2R or 4R), **not** to the alarm relay of the base module.

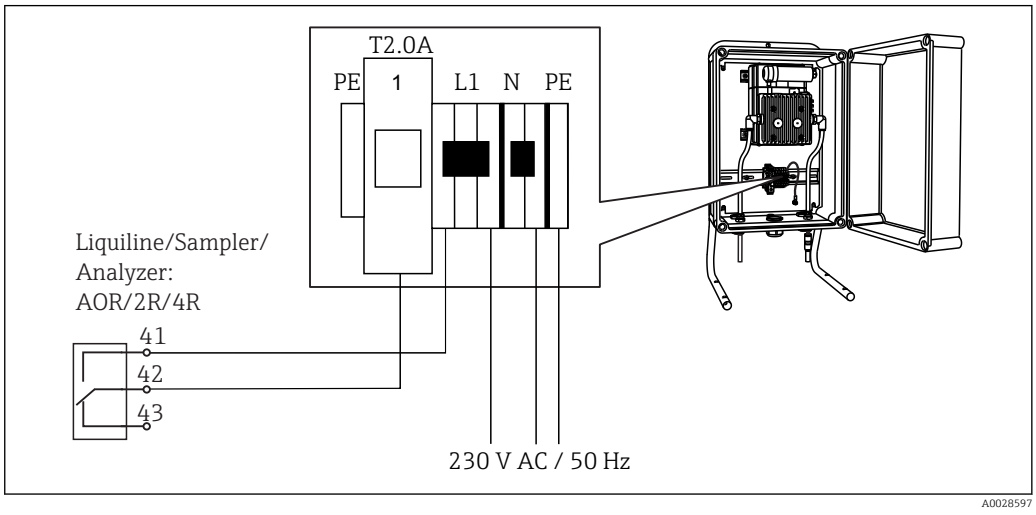

54 *Connecting the cleaning unit for CAS40D*

Example: Connecting the Chemoclean CYR10 injector cleaning unit

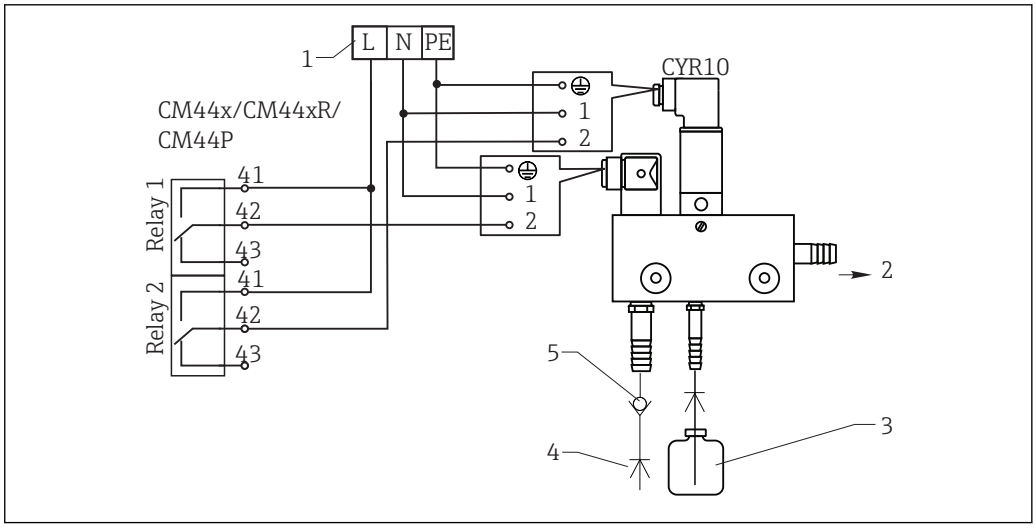

55 *Connecting the CYR10 injector cleaning unit*

1 *External power supply*
2 *Cleaner to spray head*
3 *Container with cleaner*
4 *Motive water 2 to 12 bar (30 to 180 psi)*
5 *Backflow valve (to be provided by the customer)*

6.5 Connecting digital communication

6.5.1 Module 485

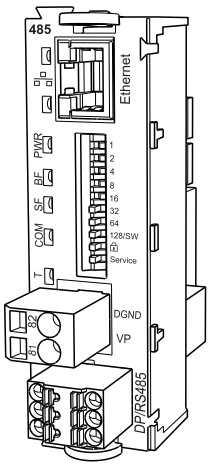

56 *Module*

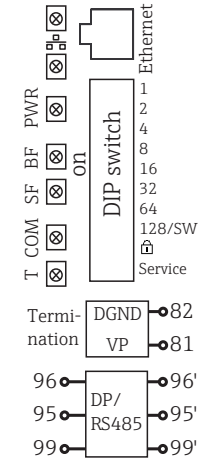

57 *Wiring diagram*

Terminal	PROFIBUS DP	Modbus RS485
95	A	B
96	B	A
99	Not connected	C
82	DGND	DGND
81	VP	VP

LEDs on front of module

LED	Designation	Color	Description
RJ45	LNK/ACT	GN	▪ Off = Connection is not active ▪ On = Connection is active ▪ Flashing = Data transmission
RJ45	10/100	YE	▪ Off = Transmission rate 10 MBit/s ▪ On = Transmission rate 100 MBit/s
PWR	Power	GN	Supply voltage is applied and module is initialized
BF	Bus failure	RD	Bus failure
SF	System failure	RD	Device error
COM	Communication	YE	Modbus message sent or received
T	Bus termination	YE	▪ Off = No termination ▪ On = Termination is used

DIP switches on front of module

DIP	Factory setting	Assignment
1-128	ON	Bus address (→ "Commissioning/communication")
🔓	OFF	Write protection: "ON" = configuration not possible via the bus, only via local operation
Service	OFF	If the switch is set to **"ON"** , the user settings for Ethernet addressing are saved and connection settings programmed into the device at the factory are activated: IP address=192.168.1.212, Subnet mask=255.255.255.0, Gateway=0.0.0.0, DHCP=Off. If the switch is set to **"OFF"** , the saved user settings are reactivated.

6.5.2 Connection via M12 connector

PROFIBUS DP

M12 Y-section	Wiring in M12 Y section	Pin assignment in connector and socket
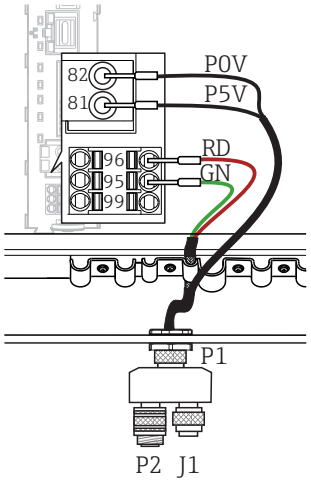	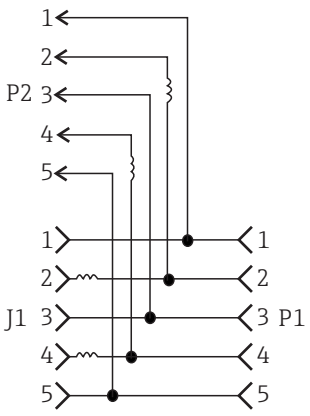	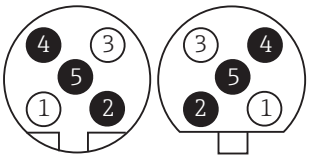
58 *M12 connection*	59 *Wiring*	60 *Connector (left) and socket (right)* *1 P5V, 5 V power supply for external terminating resistor* *2 A* *3 P0V, reference potential for P5V* *4 B* *5 n.c., not connected* * *Shielding*

When using the M12 Y-section, the maximum data transfer rate is limited to 1.5 MBit/s. For direct wiring, the maximum data transfer rate is 12 MBit/s.

Modbus RS485

M12 Y-section	Wiring in M12 Y section	Pin assignment in connector and socket
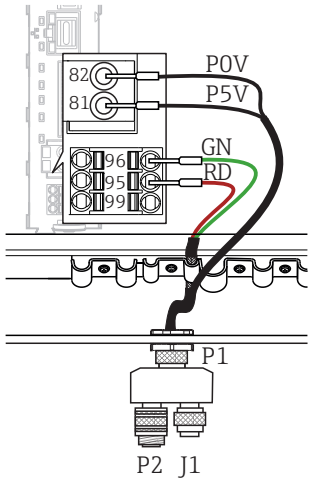 61 M12 connection	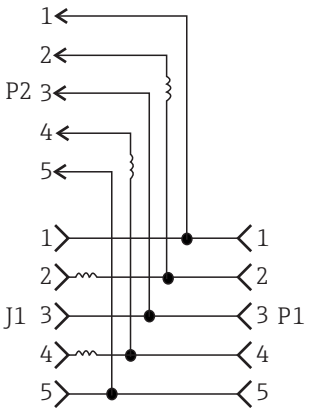 62 Wiring	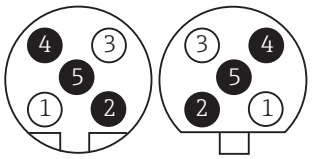 63 Connector (left) and socket (right) 1 P5V, 5 V power supply for external terminating resistor 2 A 3 P0V, reference potential for P5V 4 B 5 n.c., not connected * Shielding

Ethernet, Web server

Internal connection	Pin assignment in connector and socket
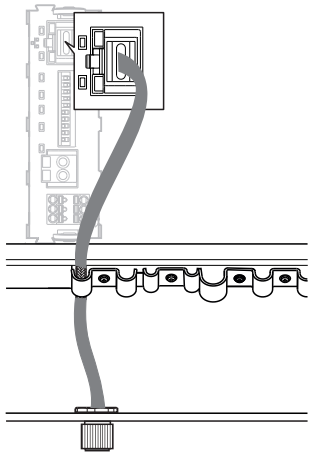 64 Ethernet socket	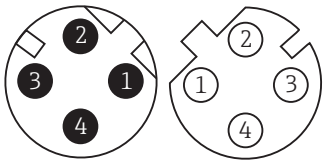 65 Connector (left) and socket (right) 1 Tx+ 2 Rx+ 3 Tx- 4 Rx- Shielding (thread)

6.5.3 Module ETH

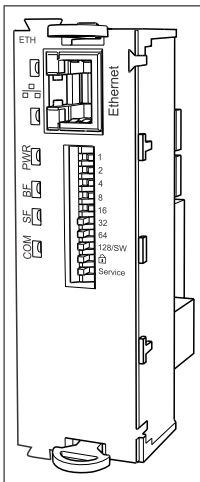

66 *Module*

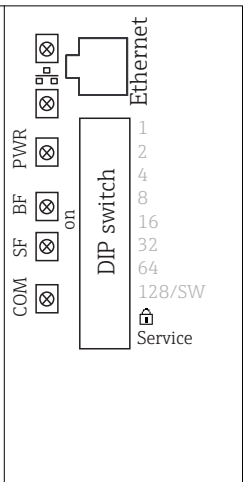

67 *Wiring diagram*

LEDs on front of module

LED	Designation	Color	Description
RJ45	LNK/ACT	GN	▪ Off = Connection is not active ▪ On = Connection is active ▪ Flashing = Data transmission
RJ45	10/100	YE	▪ Off = Transmission rate 10 MBit/s ▪ On = Transmission rate 100 MBit/s
PWR	Power	GN	Supply voltage is applied and module is initialized
BF	Bus failure	RD	Not used
SF	System failure	RD	Device error
COM	Communication	YE	Modbus message sent or received

DIP switches on front of module

DIP	Factory setting	Assignment
1-128	ON	Bus address (→ "Commissioning/communication")
🔓	OFF	Write protection: "ON" = configuration not possible via the bus, only via local operation
Service	OFF	If the switch is set to **"ON"** , the user settings for Ethernet addressing are saved and connection settings programmed into the device at the factory are activated: IP address=192.168.1.212, Subnet mask=255.255.255.0, Gateway=0.0.0.0, DHCP=Off. If the switch is set to **"OFF"** , the saved user settings are reactivated.

6.5.4 Bus termination

There are 2 ways to terminate the bus:

1. Internal termination (via DIP switch on module board)

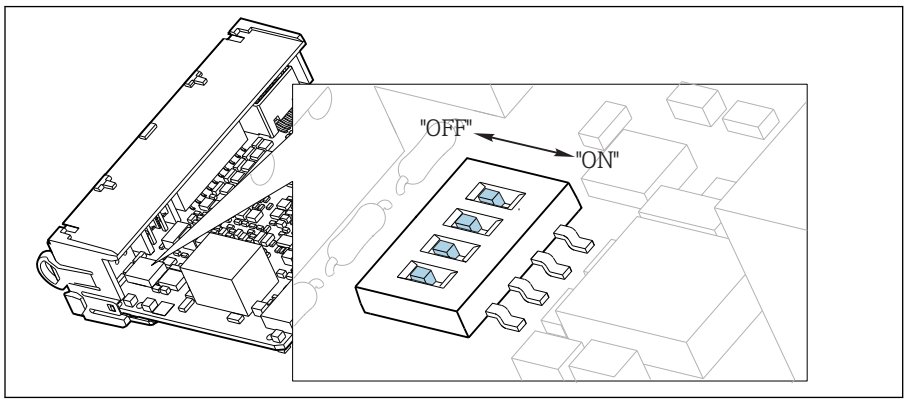

68 *DIP switch for internal termination*

- Using a suitable tool such as a tweezer, move all four DIP switches to the "ON" position.
  - The internal termination is used.

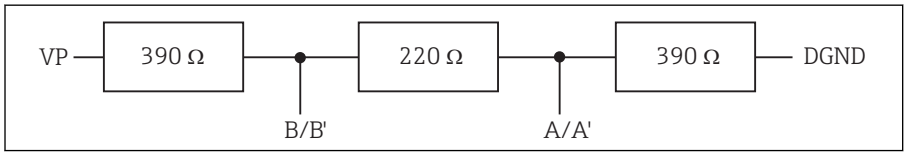

69 *Structure of internal termination*

2. External termination

Leave the DIP switches on the module board in the "OFF" position (factory setting).

- Connect the external termination to terminals 81 and 82 on the front of module 485 for 5-V power supply.
  - The external termination is used.

6.6 Hardware settings

Setting the bus address

1. Open the housing.
2. Set the desired bus address via the DIP switches of module 485.

For PROFIBUS DP, valid bus addresses are anything between 1 and 126, and anything between 1 and 247 for Modbus. If you configure an invalid address, software addressing is automatically enabled via the local configuration or via the fieldbus.

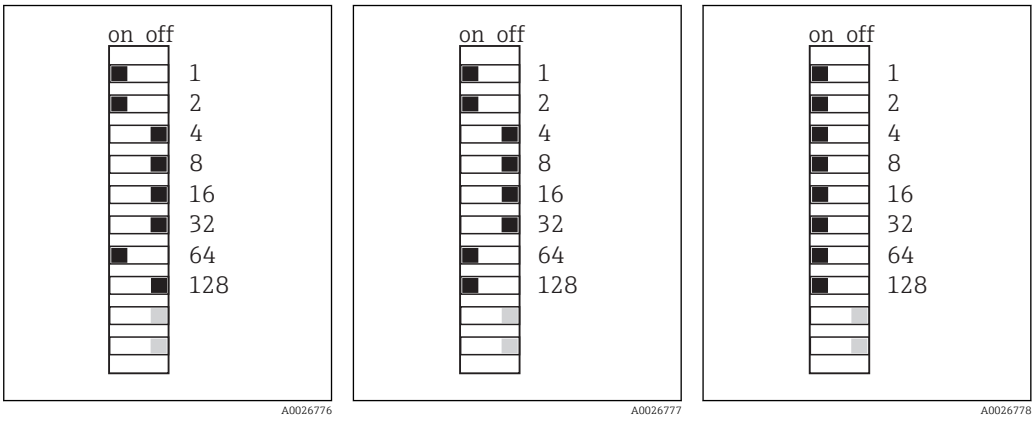

70 Valid PROFIBUS address 67 *71 Valid Modbus address 195* *72 Invalid address 255* [1]

[1] Order configuration, software addressing is active, software address configured at the factory: PROFIBUS 126, Modbus 247

6.7 Ensuring the degree of protection

Only the mechanical and electrical connections which are described in these instructions and which are necessary for the required, designated use, may be carried out on the device delivered.

▶ Exercise care when carrying out the work.

Individual types of protection permitted for this product (integrity (IP), electrical safety, EMC interference immunity, Ex protection) can no longer be guaranteed if, for example:
- Covers are left off
- Different power units to the ones supplied are used
- Cable glands are not sufficiently tightened (must be tightened with 2 Nm for the confirmed level of IP protection)
- Unsuitable cable diameters are used for the cable glands
- Modules are not fully secured
- The display is not fully secured (risk of moisture entering due to inadequate sealing)
- Loose or insufficiently tightened cables/cable ends
- Conductive cable strands are left in the device

6.8 Post-connection check

⚠ WARNING

Connection errors

The safety of people and of the measuring point is under threat. The manufacturer does not accept any responsibility for errors that result from failure to comply with the instructions in this manual.

- Put the device into operation only if you can answer **yes** to **all** the following questions.

Instrument status and specifications

- Is there any external damage to the device and cables?

Electrical connection

- Are the mounted cables strain-relieved?
- Are the cables routed without loops and cross-overs?
- Are the signal cables correctly connected as per the wiring diagram?
- Have all the other connections been established correctly?
- Have you connected unused connection wires to the protective ground connection?
- Are all plug-in terminals securely engaged?
- Are all the connection wires securely positioned in the cable terminals?
- Are all cable entries mounted, tightened and leak-tight?
- Does the supply voltage match the voltage indicated on the nameplate?

7 System integration

7.1 Web server

7.1.1 Connection

- Connect the computer's communication cable to the RJ45 port of module 485 or module ETH.

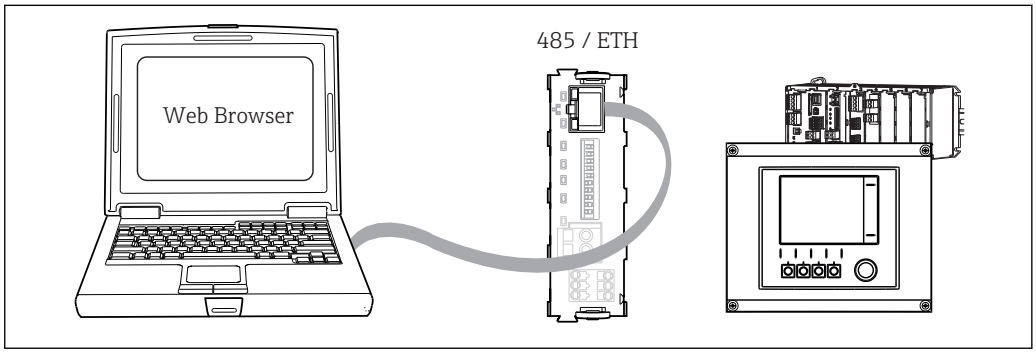

73 *Web server/Ethernet connection*

7.1.2 Establishing the data connection

To ensure that your device has a valid IP address, you must disable the **DHCP** parameter in the Ethernet settings. (**Menu/Setup/General settings/Extended setup/Ethernet/Settings**)

You can then set the IP address in the same menu.

1. Start your PC.
2. First, configure a manual IP address in the network connection settings of the operating system.

Example: Microsoft Windows 7

3. In the Control Panel, go to the Network and Sharing Center. You should see an active "Local Area Connection" link.
4. Select the "Local Area Connection" link.
5. In the pop-up window select the "Properties" button.
6. Double-click "Internet Protocol Version 4 (TCP/IPv4)".
7. Select "Use the following IP Address".
8. Enter the desired IP address. This address must be in the same subnetwork as the IP address of the device, e.g.:
   ↳ IP address for Liquiline: 192.168.1.212 (as configured previously)
   IP address for PC: 192.168.1.213.
9. Start the internet browser.
10. If you use a proxy server to connect to the Internet:
    Disable the proxy (browser settings under "Connections/LAN settings").
11. Enter the IP address of your device in the address bar (192.168.1.212 in the example).
    ↳ The system takes a few moments to establish the connection and then the CM44 web server starts. You might be asked for a password. The factory setting is "admin" for the user name and "admin" for the password.

12. Enter the following address(es) to download logbooks:
    ↳ 192.168.1.212/logbooks_csv.fhtml (for logbooks in CSV format)
    192.168.1.212/logbooks_fdm.fhtml (for logbooks in FDM format)

Downloads in FDM format can be securely transmitted, saved and visualized with Endress+Hauser's "Field Data Manager Software".

(→ www.endress.com/ms20)

7.1.3 Operation

The menu structure of the web server corresponds to the onsite operation.

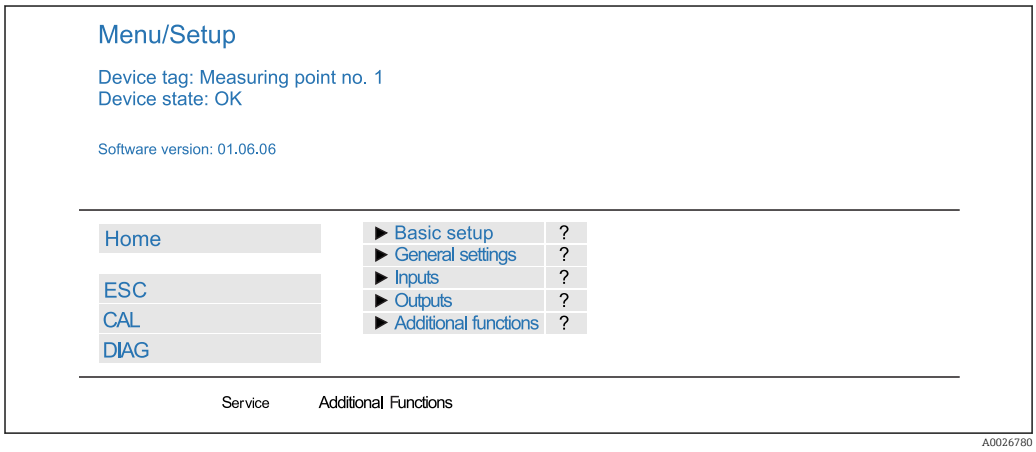

74 *Example of web server (menu/language=English)*

- Clicking a menu name or a function corresponds to pressing the navigator.
- You can make your settings conveniently via the computer keyboard.

Instead of using an Internet browser, you can also use FieldCare for configuration via ethernet. The ethernet DTM required for this is an integral part of the "Endress +Hauser Interface Device DTM Library".

Download: https://portal.endress.com/webdownload/FieldCareDownloadGUI/

7.1.4 Heartbeat verification

You can also start Heartbeat verification via the web server. This has the advantage that you can view the results directly in the browser and can avoid using an SD card.

1. Open the menu: **Diagnostics/Systemtest/Heartbeat**.
2. ▷**Perform verification**.
3. Either ▶**Verification results** (quick display and export to SD card) or **Additional Functions** (additional menu below the lower limit line → 74).
4. **Additional Functions/Heartbeat**: select the language of the pdf file.
   ↳ The verification report is displayed in the browser and can be printed out, saved as a pdf file, etc.

7.2 Service interface

You can connect the device to a computer via the service interface and configure it using "FieldCare". Furthermore, configurations can also be saved, transferred and documented.

7.2.1 Connection

1. Connect the service connector to the interface on the Liquiline base module and connect it to the Commubox.
2. Connect the Commubox via the USB connection to the computer on which FieldCare is installed.

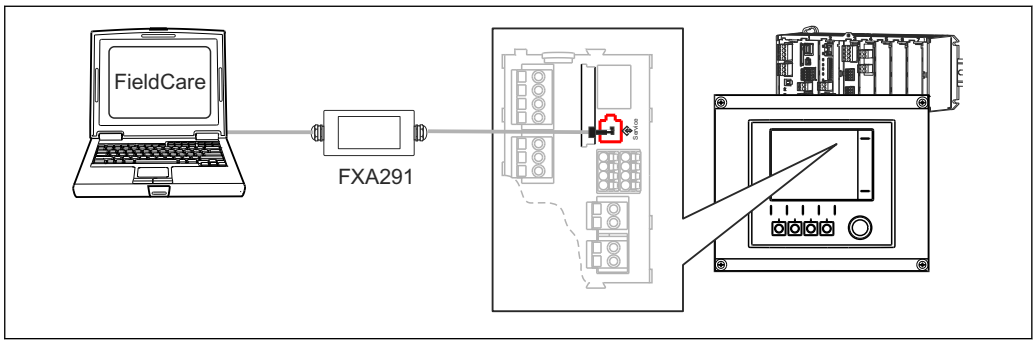

75 *Connection overview*

7.2.2 Establishing the data connection

1. Start FieldCare.
2. Establish a connection to the Commubox. To do so, select the "CDI Communication FXA291" ComDTM.
3. Then select the "Liquiline CM44x" DTM and start configuration.

You can now start online configuration via the DTM.

Online configuration competes with onsite operation, i. e. each of the two options blocks the other one. On both sides it is possible to take away access from the other side.

7.2.3 Operation

- In the DTM the menu structure corresponds to the onsite operation. The functions of the Liquiline soft keys are found in the main window on the left.
- Clicking a menu name or a function corresponds to pressing the navigator.
- You can make your settings conveniently via the computer keyboard.
- You can use FieldCare to save logbooks, make backups of configurations and transfer configurations to other devices.
- You can also print out configurations or save them as PDFs.

7.3 Fieldbuses

7.3.1 HART

You can communicate using the HART protocol via current output 1.

1. Connect the HART modem or HART handheld terminal to current output 1 (communication load 230 - 500 Ohm).
2. Establish a connection via your HART device.
3. Operate the Liquiline via the HART device. To do so, follow the instructions in the manual.

More detailed information on HART communication is provided on the product pages on the Internet (→ BA00486C).

7.3.2 PROFIBUS DP

With the fieldbus module 485 and the appropriate device version, you can communicate via PROFIBUS DP.

- Connect the PROFIBUS data cable to the terminals of the fieldbus module as described (→ 34).

For detailed information on "PROFIBUS communication", see product pages on the internet (→ SD01188C).

7.3.3 Modbus

With the fieldbus module 485 and the appropriate device version, you can communicate via Modbus RS485 or Modbus TCP.

For Modbus TCP, you can use the ETH module as an alternative to module 485.

The RTU and ASCII protocols are available when connecting via Modbus RS485. You can switch to ASCII on the device.

- Connect the Modbus data cable to the terminals of the fieldbus module (RS 485) or to the RJ45 (TCP) port as described.

For detailed information on "Modbus communication", see product pages on the internet (→ SD01189C).

7.3.4 EtherNet/IP

With the fieldbus module 485 or the ETH module and the appropriate device version, you can communicate via EtherNet/IP.

- Connect the EtherNet/IP data cable to the RJ45 socket of module 485 or ETH.

For detailed information on "EtherNet/IP communication", see product pages on the internet (→ SD01293C).

8 Operation options

8.1 Overview

8.1.1 Display and operating elements

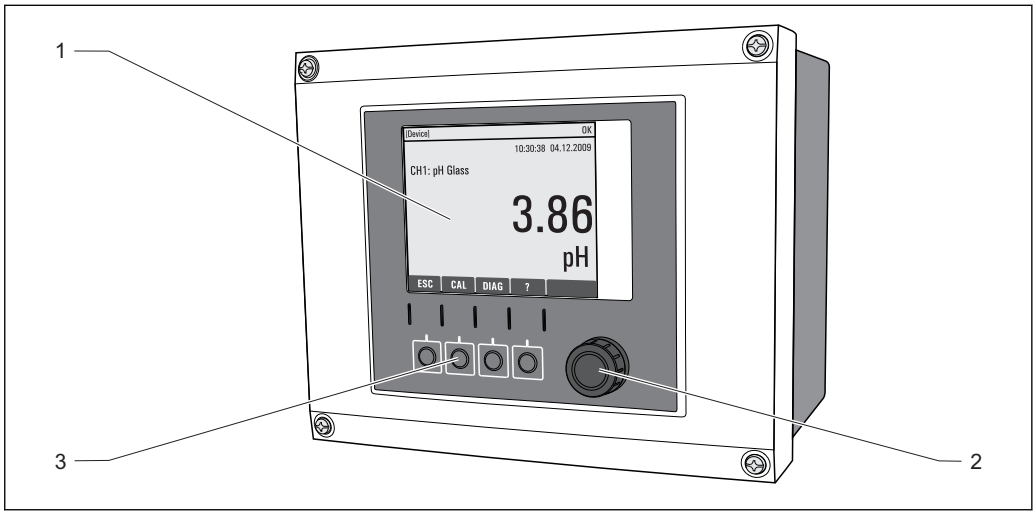

76 *Overview of operation*

1 *Display (with red display background in alarm condition)*
2 *Navigator (jog/shuttle and press/hold function)*
3 *Soft keys (function depends on menu)*

8.1.2 Display

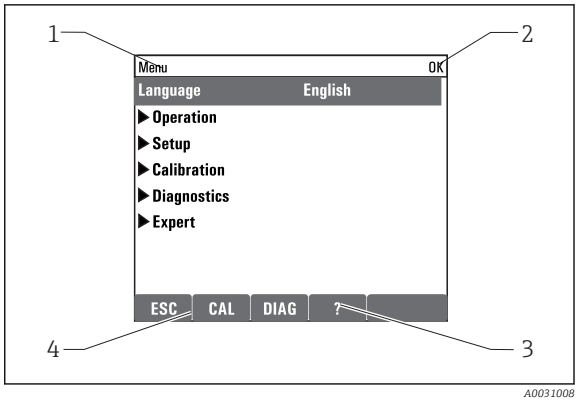

1 *Menu path and/or device designation*
2 *Status display*
3 *Help if available*
4 *Assignment of the soft keys*

8.2 Access to the operating menu via the local display

8.2.1 Operating concept

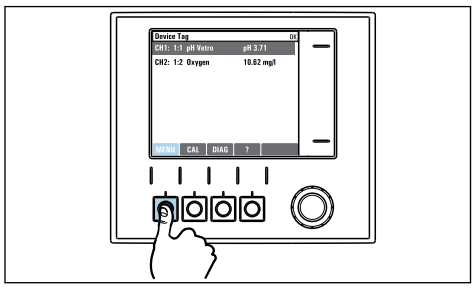

▶ Pressing the soft key: selecting the menu directly

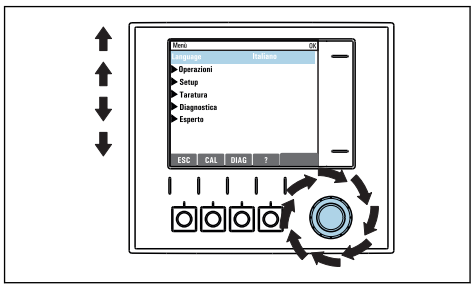

▶ Turning the navigator: moving the cursor in the menu

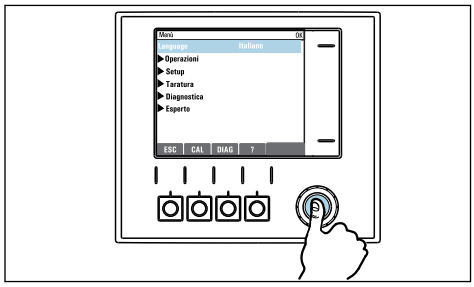

▶ Pressing the navigator: launching a function

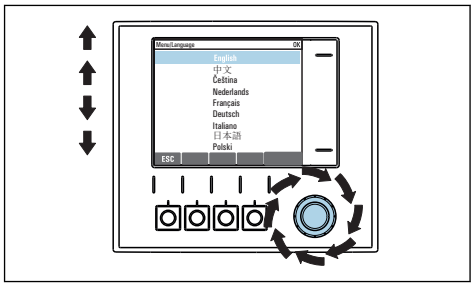

▶ Turning the navigator: selecting a value (e.g. from a list)

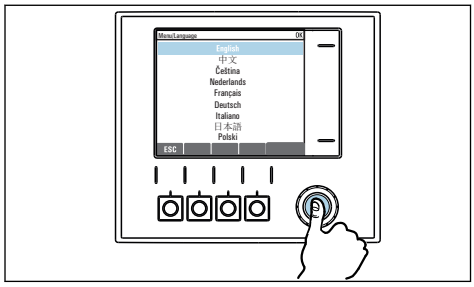

▶ Pressing the navigator: accepting the new value

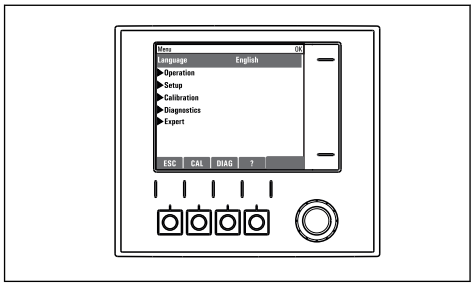

↳ New setting is accepted

8.2.2 Locking or unlocking operating keys

Locking operating keys

1. Press the navigator for longer than 2 s.
   ↳ A context menu for locking the operating keys is displayed.
   You have the choice of locking the keys with or without password protection. "With password" means that you can only unlock the keys again by entering the correct password. Set this password here: **Menu/Setup/General settings/Extended setup/Data management/Change lock password**.

2. Select whether to lock keys with or without a password.
   ↳ The keys are locked. No more entries can be made. In the soft key bar, you will see the symbol.

The password is 0000 when the device is delivered from the factory. **Make sure to note down any changes to the password,** as otherwise you will not be able to unlock the keypad yourself.

Unlocking operating keys

1. Press the navigator for longer than 2 s.
   ↳ A context menu for unlocking the operating keys is displayed.
2. **Key unlock** .
   ↳ The keys are unlocked immediately if you did not choose to lock with a password. Otherwise you are asked to enter your password.
3. Only if keypad is password-protected: enter the right password.
   ↳ The keys are unlocked. It is possible to access the entire onsite operation again. The symbol is no longer visible on the display.

8.3 Configuration options

8.3.1 Display only

- You can only read the values but cannot change them.
- Typical read-only values are: sensor data and system information
- Example: **Menu/Setup/Inputs/../Sensor type**

8.3.2 Picklists

- You receive a list of options. In a few cases, these also appear in the form of multiple choice boxes.
- Usually you just select one option; in rare instances you select one or more options.
- Example: **Menu/Setup/General settings/Temperature unit**

8.3.3 Numerical values

- You are changing a variable.
- The maximum and minimum values for this variable are shown on the display.
- Configure a value within these limits.
- Example: **Menu/Operation/Display/Contrast**

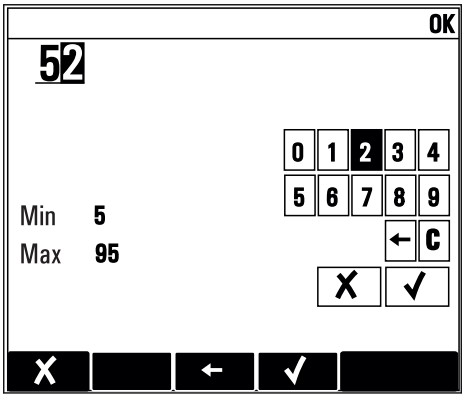

8.3.4 Actions

- You trigger an action with the appropriate function.
- You know that the item in question is an action if it is preceded by the following symbol: ▷
- Examples of typical actions include:
  - Deleting log entries
  - Saving or loading configurations
  - Triggering cleaning programs
- Example: **Diagnostics/Logbooks/Configuration logbook/Delete all entries**

8.3.5 Free text

- You are assigning an individual designation.
- Enter a text. You can use the characters in the editor for this purpose (upper-case and lower-case letters, numbers and special characters).
- Using the soft keys, you can:
  - Cancel your entries without saving the data (✗)
  - Delete the character in front of the cursor (✗)
  - Move the cursor back one position (←)
  - Finish your entries and save (✓)
- Example: **Menu/Setup/General settings/Device tag**

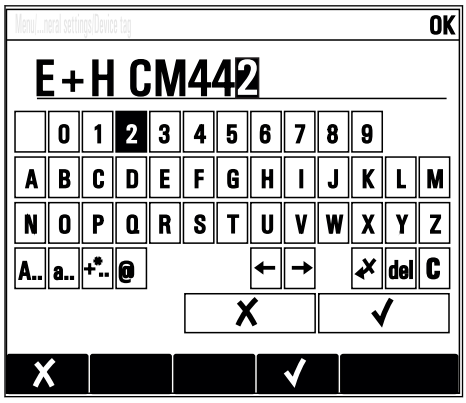

8.3.6 Tables

- Tables are needed to map mathematical functions .
- You edit a table by navigating through rows and columns with the navigator and changing the values of the cells.
- You only edit the numerical values. The controller automatically takes care of the engineering units.
- You can add lines to the table (**INSERT**) or delete lines from the table (**DEL**).
- Afterwards, you save the table (**SAVE**).
- You can also cancel your entries any time using the ✗ soft key.
- Example: **Menu**/**Setup**/**Inputs**/pH/**Medium comp.**

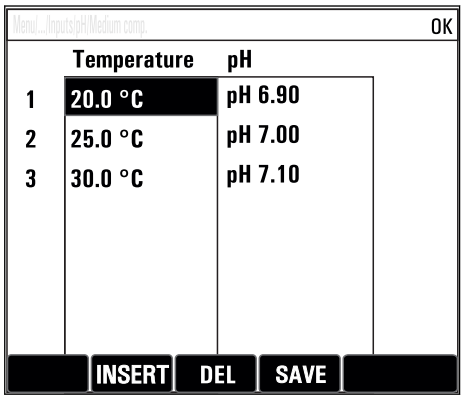

9 Commissioning

9.1 Function check

⚠ WARNING

Incorrect connection, incorrect supply voltage
Safety risks for staff and device malfunctions!
- ▶ Check that all connections have been established correctly in accordance with the wiring diagram.
- ▶ Ensure that the supply voltage matches the voltage indicated on the nameplate.

Saving the configuration settings as a screenshot

Via the local display , you can take screenshots at any time and save them to an SD card.

1. Insert an SD card into the SD card slot in the base module.
2. Press the navigator button for at least 3 seconds.
3. In the context menu, select the **Screenshot** item.
   ↳ The current screen is saved as a bitmap file to the SD card in the "Screenshots" folder.

9.2 Power up

During the device startup phase, the relays and current outputs have an undefined status for a few seconds prior to initialization. Watch out for possible effects on any actuators which may be connected.

9.2.1 Setting the operating language

Configuring the language

If you have not already done so, close the housing cover and screw the device closed.

1. Switch on the supply voltage.
   ↳ Wait for the initialization to finish.
2. Press the soft key **MENU** . Set your language in the top menu item.
   ↳ The device can now be operated in your chosen language.

9.2.2 Display behavior

Menu/Operation/Display		
Function	**Options**	**Info**
Contrast	5 to 95 % **Factory setting** 50 %	Adjust the screen settings to suit your working environment. **Backlight** = **Automatic** The backlighting is switched off automatically after a short time if a button is not pressed. It switches back on again as soon as you press the navigator button. **Backlight** = **On** The backlighting does not switch off automatically.
Backlight	**Selection** ▪ On ▪ Off ▪ Automatic **Factory setting** Automatic	
Screen rotation	**Selection** ▪ Manual ▪ Automatic **Factory setting** Manual	If **Automatic** is selected, the single-channel measured value display switches from one channel to the next every second.

9.3 User definable screens

Menu/Operation/User definable screens		
Function	**Options**	**Info**
▶ Meas. screen 1 … 6		You can create 6 measuring screens of your own and give them a name. The functions are identical for all 6 measuring screens.
Meas. screen	**Selection** ▪ On ▪ Off **Factory setting** Off	Once you have defined your own measuring screen, you can switch it on here. You can find the new screen under **User definable screens**in the measuring mode.
Label	Customized text, 20 characters	Name of the measuring screen Appears in the status bar of the display.
Number of lines	1 to 8 **Factory setting** 8	Specify the number of measured values displayed.
▶ Line 1 … 8	**Display Information** Label	Specify the content of **Label** in the submenu of each line.
Source of data	**Selection** ▪ None ▪ See list in "Info" column **Factory setting** None	▶ Select a source of data. You can choose from the following: ▪ Sensor inputs ▪ Heartbeat diagnostics of sensor inputs ▪ Controller ▪ Current inputs ▪ Fieldbus signals ▪ Mathematical functions ▪ Binary inputs and outputs ▪ Current outputs ▪ Relay ▪ Measuring range switching
Measured value **Source of data** *is an input*	**Selection** Depends on the input **Factory setting** None	You can display different main, secondary and raw measured values depending on the type of input. No options can be selected for outputs here.

Menu/Operation/User definable screens		
Function	**Options**	**Info**
Actuator type **Source of data** *is a controller*	**Selection** ▪ None ▪ Bipolar ▪ Unipolar- ▪ Unipolar+ **Factory setting** None	For more information on controllers and manipulated variables: → 🖹 71.
Label	Customized text, 20 characters	User-defined name for the parameter to be displayed
▷ Set label to "%0V" [1]	Action	If you perform this action you accept the parameter name that is automatically suggested. Your own parameter name (**Label**) is lost!

1) "%0V" here stands for text that depends on the context. This text is generated automatically by the software and inserted in place of %0V. In the simplest situations, the generated text could be the name of the measuring channel, for example.

9.4 Basic setup

Making basic settings

1. Switch to the **Setup/Basic setup** menu.
   ↳ Make the following settings.
2. **Device tag**: Give your device any name of your choice (max. 32 characters).
3. **Set date**: Correct the set date if necessary.
4. **Set time**: Correct the set time if necessary.
   ↳ For quick commissioning, you can ignore the additional settings for outputs, relays etc. You can make these settings later in the specific menus.
5. To return to the measuring mode: press the soft key for **ESC** for at least one second.
   ↳ Your controller now works with your basic settings. The sensors connected use the factory settings of the sensor type in question and the individual calibration settings that were last saved.

If you wish to configure your most important input and output parameters in the **Basic setup** :

► Configure the current outputs, relays, limit switches, controllers, device diagnostics and cleaning cycles with the submenus which follow the time setting.

10 Operation

10.1 Display

10.1.1 Soft keys in the measurement mode

On the bottom row of the display you can find four soft keys in the measuring screens:
- With **MENU**, **CAL** and **DIAG** take you directly to the specific software menu.
- With **HOLD** you can activate an immediate, general hold for sensors. This also sets all the linked outputs, controllers and cleaning cycles to HOLD. Any sensor cleaning programs that are currently running are interrupted. However, you can also start manual sensor cleaning when a hold is active.

10.1.2 Measuring mode

There are different display modes: (press the navigator button to change the mode)
- (1) Overview of all the inputs and outputs
- (2) Main measured value of an input or output or the status of a relay
- (3) Main and secondary measured value of a sensor input
- (4) All measured values of a sensor input
- (5) **Only for interface measurement:**
  Graphic display of the separation zone

There are also submenus:
- (6) User-defined screens
  Choice of previously configured screens (→ 51)
- (7) Heartbeat diagnostics
  Quick overview of the health of the device and of each connected sensor that supports Heartbeat technology

Changing to display modes (2) - (5)

▶ Turn the navigator.
  ↳ The display changes from channel to channel.

Sensor type	Main value	Main / secondary measured value	All values
pH, glass	pH value	pH value, temperature	**Main value**, **Raw value**, **Temperature**, **Glass Impedance**
Combined sensor pH and ORP	pH value or ORP or rH value	pH value or ORP or rH value, temperature	**Main value**, **Raw value**, **Temperature**, **Glass Impedance**
pH, ISFET	pH value	pH value, temperature	**Main value**, **Raw value**, **Temperature**
ORP	ORP	ORP, temperature	**Main value**, **Raw value**, **Offset**, **Temperature**
Conductivity, measured inductively	Conductivity, concentration	Conductivity, concentration, temperature	**Main value**, **Raw value**, **Temperature**
Conductivity, measured conductively	Conductivity, resistivity, concentration	Conductivity, resistivity, concentration, temperature	**Main value**, **Raw value**, **Temperature**
Oxygen, optical and amperometric	Oxygen	Oxygen, temperature	**Partial pressure**, **Saturation** , **Concentration**, **Temperature**
Disinfection	Chlorine or chlorine dioxide (depending on the sensor)	Chlorine or chlorine dioxide, temperature	**Main value**, **Raw value**, **Temperature**

Sensor type	Main value	Main / secondary measured value	All values
Nitrate	Nitrate	Nitrate, temperature	**Main value**, **Raw value**, **Temperature**
Turbidity	Turbidity	Turbidity, temperature	**Main value**, **Raw value**, **Temperature**
Spectral absorption coefficient (SAC)	SAC	SAC, temperature	**Main value**, **Raw value**, **Temperature**
Sludge level	Turbidity	Turbidity, temperature	**Main value**, **Raw value**, **Temperature**
Ammonium, ion-selective	Ammonium	Ammonium, temperature	**Main value**, **Raw value**, **Temperature**
Nitrate, ion-selective	Nitrate	Nitrate, temperature	**Main value**, **Raw value**, **Temperature**
Potassium, ion-selective	Potassium	Potassium, temperature	**Main value**, **Raw value**, **Temperature**
Interface measurement	UIS	UIS	**Main value**, **Raw value**, **Temperature** Separation zone (graphic)

Heartbeat diagnostics
(optional or with additional activation code)
- Heartbeat diagnostics screen with graphic indicators for the health of the device and sensor and with a maintenance or (sensor-dependent) calibration timer
- Heartbeat status information on the health of the device and the condition of the sensor → 🖹 55
  - ☺: Sensor/device condition or maintenance timer > 20 %; no action is required
  - 😐: Sensor/device condition or maintenance timer > 5 ≤ 20 %, maintenance not yet urgent but should be scheduled
  - ☹: Sensor/device condition or maintenance timer < 5 %, maintenance is recommended
- The Heartbeat sensor condition is the assessment of the calibration results and the sensor diagnostic functions.

An unhappy smiley can be due to the calibration result, the measured value status or to the operating hours limit having been exceeded. These limits can be configured in the sensor setup in a way that adapts the Heartbeat diagnostics to the application.

Heartbeat and NAMUR category
The Heartbeat status indicates the sensor or device condition while the NAMUR categories (F, C, M, S) assess the reliability of the measured value. The two conditions can correlate but do not have to.
- **Example 1**
  - The number of remaining cleaning cycles for the sensor reaches 20% of the defined maximum number. The Heartbeat symbol changes from ☺ to 😐. The measured value is still reliable so the NAMUR status signal does not change.
  - If the maximum number of cleaning cycles is exceeded, the Heartbeat symbol changes from 😐 to ☹. While the measured value can still be reliable, the NAMUR status signal changes to M (maintenance required).
- **Example 2**
  The sensor breaks. The Heartbeat status changes immediately from ☺ to ☹ and the NAMUR status signal also changes immediately to F (failure).

10.1.3 Device status

Icons on the display alert you to special device states.

Icon	Location	Description
F	Header bar	Diagnostic message "Failure"
M	Header bar	Diagnostic message "Maintenance request"
C	Header bar	Diagnostic message "Check"
S	Header bar	Diagnostic message "Out of specification"
⇆	Header bar	Fieldbus or TCP/IP communication active
⧗	Header bar	Hold active (for sensors)
⧗	At measured value	Hold for the actuator (current output, limit switch etc.) is active
⍐	At measured value [1]	An offset has been added to the measured value
⊗	At measured value	Measured value in "Bad" or "Alarm" state
ATC	At measured value	Automatic temperature compensation active (for sensors)
MTC	At measured value	Manual temperature compensation active (for sensors)
SIM	Header bar	Simulation mode active or Memocheck SIM connected
SIM	At measured value	The measured value is influenced by a simulated value
SIM	At measured value	The displayed measured value is simulated (for sensors)
☺	After the channel number	Heartbeat diagnostics: condition of sensor is good
☹	After the channel number	Heartbeat diagnostics: condition of sensor is bad
😐	After the channel number	Heartbeat diagnostics: condition of sensor is OK
◹	Header bar	Controller is active

1) Only pH or ORP measurement

If two or more diagnostic messages occur simultaneously, only the icon for the message with the highest priority is shown on the display (for the order of priority according to NAMUR, → 🖹 112).

10.1.4 Assignment views

Assignment views, e.g. **Channel assignment view**, appear as the last function in many sections of the menu. You can use this function to see which actuators or functions are connected to an input or output. The assignments appear in hierarchical order.

10.2 General settings

10.2.1 Basic settings

Menu/Setup/General settings		
Function	**Options**	**Info**
Device tag	Customized text, 32 characters	▶ Select any name for your controller, e.g. use the TAG name.
Temperature unit	**Selection** ▪ °C ▪ °F ▪ K **Factory setting** °C	

Menu/Setup/General settings		
Function	**Options**	**Info**
Current output range	**Selection** ▪ 0..20 mA ▪ 4..20 mA **Factory setting** 4..20 mA	In accordance with Namur NE43, the linear range is from 3.8 to 20.5 mA (**4..20 mA**) or from 0 to 20.5 mA (**0..20 mA**). If the range is exceeded or undershot, the current value stops at the range limit and a diagnostic message (460 or 461) is output.
Error current	0.0 to 23.0 mA **Factory setting** 22.5 mA	The function meets NAMUR NE43. ▶ Set the current value that should be output at the current outputs in the event of an error.
The value for **Error current** should be outside the measuring range. If you decided that your **Current output range** = **0..20 mA** you should set an error current between 20.1 and 23 mA. If the **Current output range** = **4..20 mA** you could also define a value < 4 mA as the error current. The device allows an error current within the measuring range. In such instances pay attention to any effects this may have on your process.		
Alarm delay	0 to 9999 s **Factory setting** 0 s	The software displays only the errors that are present longer than the set delay time. This makes it possible to suppress messages that only occur briefly and are caused by normal process-specific fluctuations.
Device hold	**Selection** ▪ Disabled ▪ Enabled **Factory setting** Disabled	You can enable an immediate, general hold (for sensors) here. The function acts in the same way as the **HOLD** soft key in the screens.

10.2.2 Date and time

Menu/Setup/General settings/Date/Time		
Function	**Options**	**Info**
Set date	Depends on the format	Editing mode: Day (two-digit): 01 to 31 Month (two-digit): 01 to 12 Year (four-digit): 1970 to 2106
Set time	Depends on the format	Editing mode: hh (hour): 00 to 23 / 0 am to 12 pm mm (minutes): 00 to 59 ss (seconds): 00 to 59

Menu/Setup/General settings/Date/Time		
Function	**Options**	**Info**
▶ Extended setup		
Date format	**Selection** ▪ DD.MM.YYYY ▪ YYYY-MM-DD ▪ MM-DD-YYYY **Factory setting** DD.MM.YYYY	▶ Select a date format.
Time format	**Selection** ▪ hh:mm am (12h) ▪ hh:mm (24h) ▪ hh:mm:ss (24h) **Factory setting** hh:mm:ss (24h)	▶ Choose between 12-hour display or 24-hour display. Seconds can also be displayed with the latter version.
Time zone	**Selection** ▪ None ▪ Choice of 35 time zones **Factory setting** None	**None** = Greenwich Mean Time (London).
DST	**Selection** ▪ Off ▪ Europe ▪ USA ▪ Manual **Factory setting** Off	The controller adapts the summertime/normal time changeover automatically if you choose European or American daylight saving time. Manual means that you can specify the start and end of daylight saving time yourself. Here, two additional submenus are displayed in which you specify the changeover date and time.

10.2.3 Hold settings

Menu/Setup/General settings/Hold settings		
Function	**Options**	**Info**
Settings automatic Hold		
Hold release time	0 to 600 s **Factory setting** 0 s	The hold status is maintained for the duration of the delay time when you switch to the measuring mode.
Setup menu	**Selection** ▪ Disabled ▪ Enabled **Factory setting** Disabled	▶ Decide whether the device outputs should switch to the defined hold state when the particular menu is opened.
Diagnostics menu		
Calibration active	**Factory setting** Enabled	

If a device-specific hold status is activated, any cleaning previously started is interrupted. When a hold is active you can only start manual cleaning.

10.2.4 Logbooks

Logbooks record the following events:
- Calibration/adjustment events
- Operator events
- Diagnostic events

You define how the logbooks should store the data.

In addition, you can also define individual data logbooks .

1. Assign the logbook name.
2. Select the measured value to be recorded.
3. Set the recording rate (**Scan time**).
   ↳ You can set the recording rate individually for every data logbook.

Further information on the logbooks: → 118.

Menu/Setup/General settings/Logbooks		
Function	**Options**	**Info**
Logbook ident	Customized text, 16 characters	Part of the file name when exporting a logbook
Event logbook	**Selection** ▪ Off ▪ Ring buffer ▪ Fill up buffer **Factory setting** Ring buffer	All diagnostic messages are recorded **Ring buffer** If the memory is full, the most recent entry automatically overwrites the oldest entry. **Fill up buffer** If the memory is full, there is an overflow,i. e. you cannot store any new values. The controller displays a corresponding diagnostic message. The memory then has to be cleared manually.
▶ Overflow warnings **Event logbook** = **Fill up buffer**		
Calibration logbook Diagnostic logbook Configuration logbook	**Selection** ▪ Off ▪ On **Factory setting** Off	▸ Decide whether you want to receive a diagnostic message if the fill buffer of the relevant logbook overflows.
▶ Data logbooks		
▶ New		You can create a maximum of 8 data logbooks.
Logbook name	Customized text, 20 characters	
Source of data	**Selection** ▪ Sensor inputs ▪ Heartbeat signals ▪ Controller ▪ Current inputs ▪ Fieldbus signals ▪ Binary inputs ▪ Mathematical functions **Factory setting** None	▸ Select a data source for the logbook entries. You can choose from the following: ▪ Connected sensors ▪ Available controllers ▪ Current inputs ▪ Fieldbus signals ▪ Binary input signals ▪ Mathematical functions
Measured value	**Selection** depend on **Source of data** **Factory setting** None	You can record different measured values depending on the data source.

Menu/Setup/General settings/Logbooks		
Function	**Options**	**Info**
Scan time	0:00:01 to 1:00:00 **Factory setting** 0:01:00	Minimum time interval between two entries Format: H:MM:SS
Data logbook	**Selection** ▪ Ring buffer ▪ Fill up buffer **Factory setting** Ring buffer	**Ring buffer** If the memory is full, the most recent entry automatically overwrites the oldest entry. **Fill up buffer** If the memory is full, there is an overflow,i. e. no new values can be saved. The controller displays a corresponding diagnostic message. The memory then has to be cleared manually.
Overflow warnings **Event logbook** = **Fill up buffer**	**Selection** ▪ Off ▪ On **Factory setting** Off	▶ Decide whether you want to receive a diagnostic message if the fill buffer of the relevant logbook overflows.
▷ Add another logbook	Action	Only if you want to create another data logbook immediately. You add a new data logbook at a later date using **New** .
▷ Finished	Action	This allows you to exit the menu **New**.
▷ Start/stop simultaneously	Action	Appears if you have created more than one data logbook. With one mouse click, you can start or stop recording all the data logbooks.
▶ Logbook name		The name of this submenu is based on the name of the logbook and only appears once you have created a logbook.
This menu appears several times if you have several data logbooks.		
Source of data	Read only	This is for information purposes only. If you want to record another value, delete this logbook and create a new data logbook.
Measured value		
Log time left **Event logbook** = **Fill up buffer**	Read only	Displays the days, hours and minutes remaining until the logbook is full.
Log size **Event logbook** = **Fill up buffer**	Read only	Displays the number of entries remaining until the logbook is full.
Logbook name	Customized text, 20 characters	You can change the name here again.
Scan time	0:00:01 to 1:00:00 **Factory setting** 0:01:00	As above Minimum time interval between two entries Format: H:MM:SS
Data logbook	**Selection** ▪ Ring buffer ▪ Fill up buffer **Factory setting** Ring buffer	**Ring buffer** If the memory is full, the most recent entry automatically overwrites the oldest entry. **Fill up buffer** If the memory is full, there is an overflow, i. e. no new values can be saved. The controller displays a corresponding diagnostic message. The memory then has to be cleared manually.
Overflow warnings **Event logbook** = **Fill up buffer**	**Selection** ▪ Off ▪ On **Factory setting** Off	▶ Decide whether you want to receive a diagnostic message if the fill buffer of the relevant logbook overflows.

Menu/Setup/General settings/Logbooks		
Function	**Options**	**Info**
▶ Line plotter		Menu to define the graphic display
Axes	**Selection** ▪ Off ▪ On **Factory setting** On	Should the axes (x, y) be displayed (**On**) or not (**Off**)?
Orientation	**Selection** ▪ Horizontal ▪ Vertical **Factory setting** Horizontal	You can choose whether the value curves should be displayed from left to right (**Horizontal**) or from top to bottom (**Vertical**). If you want to display two data logbooks simultaneously, make sure that both logbooks have the same settings here.
X-Description Y-Description Grids Pitches	**Selection** ▪ Off ▪ On **Factory setting** On	▶ Decide whether a description should be displayed for the axes and whether gridlines should be shown. In addition, you can also decide whether pitches should be displayed.
X Pitch/Grid distance Y Pitch/Grid distance	10 to 50% **Factory setting** 10 %	▶ Determine the pitch.
▷ Remove	Action	This action removes the data logbook. Any data that have not been saved are lost.

Example: New data logbook (Setup/General settings/Logbooks/Data logbooks/New)

1. Make the settings:

- Logbook name
  Assign a name. Example: "01".
- Source of data
  Select a data source. Example: Sensor connected to channel 1 (CH1).
- Measured value
  Select the measured value to be recorded. Example: pH value.
- Scan time
  Specify the time interval between two logbook entries.
- Data logbook
  Activate the logbook: specify the data storage method.

2. Run the .../**Finished**: action.
   ↳ The device shows the new logbook in the list of data logbooks.
3. Select data logbook "01".
   ↳ Additional display: **Log time left**.
4. Only for **Fill up buffer**:
   Choose **Overflow warning**: **On** or **Off**.
   ↳ **On**: The device displays a diagnostic message in the event of memory overflow.
5. Submenu **Line plotter**: Specify the type of graphic representation.

10.2.5 Advanced setup

Diagnostics settings

The list of diagnostic messages displayed depends on the path selected. There are device-specific messages, and messages that depend on what sensor is connected.

Menu/Setup/(General settings or Inputs<Sensor channel>)/Extended setup/Diagnostics settings/Diag. behavior		
Function	**Options**	**Info**
List of diagnostic messages		▶ Select the message to be changed. Only then can you make the settings for this message.
Diag. code	Read only	
Diagnostic message	**Selection** ▪ On ▪ Off **Factory setting** Depends on the message	You can deactivate or reactivate a diagnostic message here. Deactivating means: ▪ No error message in the measuring mode ▪ No error current at the current output
Error current	**Selection** ▪ On ▪ Off **Factory setting** Depends on the message	▶ Decide whether an error current should be output at the current output if the diagnostic message display is activated. In the event of general device errors, the error current is output at all the current outputs. In the event of channel-specific errors, the error current is only output at the assigned current output.
Status signal	**Selection** ▪ Maintenance (M) ▪ Out of specification (S) ▪ Function check (C) ▪ Failure (F) **Factory setting** Depends on the message	The messages are divided into different error categories in accordance with NAMUR NE 107. ▶ Decide whether you want to change a status signal assignment for your application.
Diag. output	**Selection** ▪ None ▪ Alarm relay ▪ Binary output ▪ Relay 1 to n (depends on the device version) **Factory setting** None	You can use this function to select an output to which the diagnostic message should be assigned. Before being able to assign the message to an output you must first configure a relay output to **Diagnostics** . (**Menu**/**Setup**/**Outputs**: Assign the **Diagnostics** function and set the **Operating mode** to **as assigned** .)
An alarm relay is always available, regardless of the device version. Other relays are optional.		
Cleaning program (for sensors)	**Selection** ▪ None ▪ Cleaning 1 ▪ Cleaning 2 ▪ Cleaning 3 ▪ Cleaning 4 **Factory setting** None	▶ Decide whether the diagnostic message should trigger a cleaning program. You can define the cleaning programs under: **Menu**/**Setup**/**Additional functions**/**Cleaning**.
Detail information	Read only	Here you can find more information on the diagnostic message and instructions on how to resolve the problem.

HART bus address

The list of diagnostic messages displayed depends on the path selected. There are device-specific messages, and messages that depend on what sensor is connected.

Menu/Setup/General settings/Extended setup/HART		
Function	**Options**	**Info**
Bus address	0 to 63 **Factory setting** 0	You can change the device address to integrate several HART devices in a single network (Multidrop mode).

If you reset the device to the factory settings (**Diagnostics/Reset/Factory default**), the bus address is not reset. Your setting is retained.

PROFIBUS DP

Menu/Setup/General settings/Extended setup/PROFIBUS		
Function	**Options**	**Info**
Enable	**Selection** ▪ Off ▪ On **Factory setting** On	You can switch off communication at this point. The software can then only be accessed via local operation.
Termination	Read only	If the device is the last in the bus, you can terminate via the hardware. → 🖹 38
Bus address	1 to 125	If you have addressed the bus via hardware (DIP switches on the module, → 🖹 38), you can only read the address here. If an invalid address is set via the hardware, you have to assign a valid address for your device either here or via the bus.
Ident number	**Selection** ▪ Automatic ▪ PA-Profile 3.02 (9760) ▪ Liquiline CM44x (155D) ▪ Manufacturer specific **Factory setting** Automatic	

Modbus

Menu/Setup/General settings/Extended setup/Modbus		
Function	**Options**	**Info**
Enable	**Selection** ▪ Off ▪ On **Factory setting** On	You can switch off communication at this point. The software can then only be accessed via local operation.
Termination	Read only	If the device is the last in the bus, you can terminate via the hardware. → 🖹 38

Menu/Setup/General settings/Extended setup/Modbus		
Function	**Options**	**Info**
Settings		
Transmission Mode	**Selection** ▪ TCP ▪ RTU ▪ ASCII **Factory setting** (Modbus-RS485 only) RTU	The transmission mode is displayed depending on the version ordered. In the case of RS485 transmission, you can choose between **RTU** and **ASCII** . There are no choices for Modbus-TCP.
Baudrate *Modbus-RS485 only*	**Selection** ▪ 1200 ▪ 2400 ▪ 4800 ▪ 9600 ▪ 19200 ▪ 38400 ▪ 57600 ▪ 115200 **Factory setting** 19200	
Parity *Modbus-RS485 only*	**Selection** ▪ Even (1 Stopbit) ▪ Odd (1 Stopbit) ▪ None (2 Stopbit) **Factory setting** Even (1 Stopbit)	
Byte order	**Selection** ▪ 1-0-3-2 ▪ 0-1-2-3 ▪ 2-3-0-1 ▪ 3-2-1-0 **Factory setting** 1-0-3-2	
Watchdog	0 to 999 s **Factory setting** 5 s	If no data transmission takes place for longer than the time set, this is an indicator that communication has been interrupted. After this time, input values received via the Modbus are considered to be invalid.

Web server

Menu/Setup/General settings/Extended setup/Webserver		
Function	**Options**	**Info**
Webserver	**Selection** ▪ Off ▪ On **Factory setting** On	You can switch off communication at this point. The software can then only be accessed via local operation.
Webserver TCP Port 80	Read only	The Transmission Control Protocol (TCP) is an arrangement (protocol) as to how data should be exchanged between computers. A port is a part of an address which assigns data segments to a network protocol.
Webserver login	**Selection** ▪ Off ▪ On **Factory setting** On	You can switch user administration on and off at this point. This makes it possible to create multiple users with password access.

Menu/Setup/General settings/Extended setup/Webserver		
Function	**Options**	**Info**
User administration		
List of users already created	View/edit	You can change user names or passwords or delete users. A user is already created at the factory: "admin" with password "admin".
New user:		
Name	Free text	**Create new user** 1. **INSERT** . 2. Assign any name to the new user. 3. Select a password for the user. 4. Confirm password. ↳ You can now change the password at any time.
Enter new user password	Free text	
Confirm new user password	Free text	
Change user password	Free text	

EtherNet/IP

Menu/Setup/General settings/Extended setup/Ethernet		
Function	**Options**	**Info**
Enable	**Selection** ▪ Off ▪ On **Factory setting** On	You can switch off communication at this point. The software can then only be accessed via local operation.
Settings		
Link settings	**Selection** ▪ Auto negotiation ▪ 10MBps Half duplex ▪ 10MBps Full duplex ▪ 100MBps Half duplex ▪ 100MBps Full duplex **Factory setting** Auto negotiation	Transmission methods of the communication channels ▪ Full duplex: Data can be transmitted and received simultaneously. ▪ Half-duplex: Data can be transmitted and received on an alternating basis only, i.e. not simultaneously.
DHCP	**Selection** ▪ Off ▪ On **Factory setting** On	The Dynamic Host Configuration Protocol (DHCP) makes it possible to assign the network configuration to clients via a server. With DHCP, it is possible to automatically integrate the device into an existing network without the need for manual configuration. Normally only the automatic assignment of the IP address must be configured at the client. During startup, the IP address, the netmask and the gateway are retrieved from a DHCP server. Do you want to assign the IP address of the device manually? If so, you must set **DHCP** = **Off** .
IP-Address	xxx.xxx.xxx.xxx	An IP address is an address in computer networks which are based on the Internet protocol (IP). You can only set the IP address if **DHCP** is switched off.

Menu/Setup/General settings/Extended setup/Ethernet		
Function	**Options**	**Info**
Netmask	xxx.xxx.xxx.xxx	On the basis of the IP address of a device, the netmask specifies which IP addresses this device searches for in its own network and which addresses it could access in other networks via a router. It therefore divides the IP address into a network part (network prefix) and a device part. The network part must be identical for all devices in the individual network, and the device part must be different for every device within the network.
Gateway	x.x.x.x	A gateway (protocol converter) enables communication between networks that are based on completely different protocols.
Service switch	Read only	
MAC-Address	Read only	The MAC address (Media Access Control address) is the hardware address of every individual network adapter which is used to uniquely identify the device in a computer network.
EtherNetIP Port 44818	Read only	A port is a part of an address which assigns data segments to a network protocol.

Accepting settings

Have you changed settings manually, such as the IP address?

- Before you leave the **Ethernet** menu:
  SAVE Select , to apply your settings.
  - In the **DIAG/System information** menu you can check whether the new settings are used.

Data management

Firmware update

Please contact your local sales office for information on firmware updates available for your controller and its compatibility with earlier versions.

The **current firmware version** can be found at: **Menu/Diagnostics/System information/**.

- Back up your current setup and your logbooks to an SD card.

To install a firmware update, you must have the update available on an SD card.

1. Insert the SD card into the controller card reader.
2. Go to **Menu/Setup/General settings/Extended setup/Data management/ Firmware update** .
   - The update files on the SD card are displayed.
3. Select the desired update and select yes when asked the following:

   The current firmware will be overwritten.
   After this the device will reboot.
   Do you want to proceed?

   - The firmware is loaded and the device is then started with the new firmware.

Saving the setup

Saving a setup offers the following advantages, among others :
- Copying settings for other devices
- Quick and easy switching between various setups, e. g. for different user groups or for recurring sensor type changes
- Restoring a tried-and-tested setup, e. g. if you have changed a lot of settings and no longer know what the original settings were

1. Insert the SD card into the controller card reader.
2. Go to **Menu/Setup/General settings/Extended setup/Data management/Save setup** .
3. **Name**: Assign a file name.
4. Then select **Save** .
   ↳ If you have already assigned the file name, you will be asked whether you want to overwrite the existing setup.
5. Use **OK** to confirm or cancel and assign a new file name.
   ↳ Your setup is stored on the SD card and you can upload it quickly to the device at a later date.

Loading the setup

When you load a setup, the current configuration is overwritten.

1. Insert the SD card into the controller card reader. A setup must have been saved to the SD card.
2. Go to **Menu/Setup/General settings/Extended setup/Data management/Load setup** .
   ↳ A list of all the setups on the SD card is displayed.
   An error message is displayed if there is no valid setup on the card.
3. Select the desired setup.
   ↳ A warning is displayed:

   The current parameters will be overwritten and the device will reboot.
   Warning: Please note that cleaning and controller programs can be active.
   Do you want to proceed?
4. Use **OK** to confirm or cancel.
   ↳ If you select **OK** to confirm, the device restarts with the desired setup.

Exporting the setup

Exporting a setup offers the following advantages, among others:
- Export in XML format with a stylesheet for formatted display in an XML-compatible application, such as . Microsoft Internet Explorer
- Importing the data (drag and drop the XML file into a browser window)

1. Insert the SD card into the controller card reader.
2. Go to **Menu/Setup/General settings/Extended setup/Data management/Export setup** .
3. **Name**: Assign a file name.
4. Then select **Export** .
   ↳ If you have already assigned the file name, you will be asked whether you want to overwrite the existing setup.

5. Use **OK** to confirm or cancel and assign a new file name.
   ↳ Your setup is saved on the SD card in the "Device" folder.

You cannot upload the exported setup to the device again. You must use the **Save setup** . This is the only way you can save a setup to an SD card and reload it later on or upload it to other devices.

Activation code

You require activation codes for:
- Additional functions, e. g. fieldbus communication
- Firmware upgrades
- Modifications, e. g. deactivation of fieldbus protocols

If your original device has activation codes, these can be found on the internal nameplate. The corresponding device functions are activated at the factory. You only require the codes if servicing the device or deactivating fieldbus protocols.

1. Enter activation code: **Menu/Setup/General settings/Extended setup/Data management/Activation code**.
2. Confirm your entry.
   ↳ The new hardware or software function is activated and can be configured.

Functions that are enabled by an activation code:

Function	Activation code beginning with
Second Memosens input (CM442 only)	062...
Deactivation of fieldbus when 485 or ETH module is removed [1]	0B0...
Two current outputs (BASE-E module only)	081...
HART	0B1...
PROFIBUS PA	0B2...
PROFIBUS DP	0B3...
Modbus TCP	0B4...
Modbus RS485	0B5...
EtherNet/IP	0B6...
Measuring range switching, set 1	211...
Measuring range switching, set 2 [2]	212...
Feedforward control	220...
Chemoclean Plus	25...
Configure the mathematical function **Cation exchanger capacity**	301...
Heartbeat monitoring	2D1...
Heartbeat verification	2E1...

1) The device displays an error message if you remove the 485 or ETH module with the fieldbus protocol activated. You must now enter the activation code on the inside nameplate. The fieldbus is only deactivated once you do this. Afterwards you must enter the appropriate activation code to activate current outputs of the base module. Additional current outputs (CM444R and CM448R only) are activated as soon as the corresponding module is used.
2) When you order the "Measuring range switching" option, you receive two activation codes. Enter both in order to have two sets for measuring range switching.

Change password

You can lock the operating keys with a password (access the context menu by pressing the navigator for longer). The keys can then only be enabled by entering the right password.

You can set the password to lock the keys here: **Menu/Setup/General settings/Extended setup/Data management/Change lock password**.

1. Enter the current password (factory setting 0000).
   ↳ Enter new lock password
2. Enter a new password.
   ↳ Confirm new lock password
3. Enter the new password again.
   ↳ The lock password has been changed successfully.

Press the navigator for longer to return to the measuring mode.

10.3 Current inputs

The input can be used as the data source for limit switches and logbooks, for example. Furthermore, external values can be made available as set points for controllers.

Menu/Setup/Inputs/Current input x:y [1]		
Function	**Options**	**Info**
Mode	**Selection** ▪ Off ▪ 0 - 20mA ▪ 4 - 20mA **Factory setting** 4 - 20mA	▶ Select the same current range as in the data source (connected device).
Input mode	**Selection** ▪ Flow rate ▪ Parameter ▪ Current **Factory setting** Current	▶ Select the input variable.
Meas. value format	**Selection** ▪ # ▪ #.# ▪ #.## ▪ #.### **Factory setting** #.#	▶ Specify the number of decimal places.
Parameter name **Input mode** = **Parameter**	Customized text, 16 characters	▶ Assign a useful name, e.g. the parameter name that the data source also uses.
Unit of measure **Input mode** = **Parameter**	Customized text, 16 characters	You cannot choose the unit from a list. If you want to use a unit, you must enter it here as customized text.
Lower range value **Input mode** = **Parameter**	-20.0 ... **Upper range value** <unit of measure> **Factory setting** 0.0 <engineering unit>	▶ Enter the measuring range. The lower and upper range values are assigned to the 0 or 4 mA value and the 20 mA value respectively. The system uses the engineering unit which you entered beforehand.
Upper range value **Input mode** = **Parameter**	**Lower range value** to 10000.0 <engineering unit> **Factory setting** 10.0 <engineering unit>	
Damping	0 to 60 s **Factory setting** 0 s	The damping causes a floating average curve of the measured values over the time specified.

1) x:y = slot no. : input number

10.4 Outputs

10.4.1 Current outputs

The basic version of the device always has two current outputs.

You can configure additional current outputs with extension modules.

Setting the current output range

▶ **Menu/Setup/General settings**: select **0..20 mA** or **4..20 mA**.

Menu/Setup/Outputs/Current output x:y [1]		
Function	**Options**	**Info**
Current output	**Selection** ▪ Off ▪ On **Factory setting** Off	Use this function to activate or deactivate a variable being output at the current output
Source of data	**Selection** ▪ None ▪ Connected inputs ▪ Controller **Factory setting** None	The sources of data on offer depend on your device version. The all the sensors and controllers connected to inputs are available for selection.
Measured value	**Selection** ▪ None ▪ Depends on the **Source of data** **Factory setting** None	The measured value you can select depends on the option selected under **Source of data** .
The list of the dependent measured values can be found in the **Measured value** *depending on the* **Source of data**→ 🖹 69. Apart from measured values from connected sensors, you can also select a controller as the data source. The best way to do so is by using the **Additional functions**menu. Here, you can select and configure the current output for outputting the controlled variable.		
Range lower value Range upper value	Range of adjustment and factory settings depending on the **Measured value**	You can output the entire measuring range or just some of it at the current output. To do so, specify the upper and lower range values in accordance with your requirements.
Hold behavior	**Selection** ▪ Freeze ▪ Fixed value ▪ None **Factory setting** Depends on the channel:output	**Freeze** The device freezes the last current value. **Fixed value** You define a fixed current value that is output at the output. **None** A hold does not affect this current output.
Hold current **Hold behavior** = **Fixed value**	0.0 to 23.0 mA **Factory setting** 22.0 mA	▶ Specify which current should be output at this current output in the hold state.

1) x:y = slot: output number

Measured value *depending on the* Source of data

Source of data	**Measured value**
pH Glass pH ISFET	**Selection** ▪ Raw value mV ▪ pH ▪ Temperature

Source of data	Measured value
ORP	**Selection** ▪ Temperature ▪ ORP mV ▪ ORP %
Oxygen (amp.) Oxygen (opt.)	**Selection** ▪ Temperature ▪ Partial pressure ▪ Concentration liquid ▪ Saturation ▪ Raw value nA *(only* **Oxygen (amp.)***)* ▪ Raw value µs *(only* **Oxygen (opt.)***)*
Cond i Cond c Cond c 4-pol	**Selection** ▪ Temperature ▪ Conductivity ▪ Resistance *(only* **Cond c***)* ▪ Concentration *(only* **Cond i** *and* **Cond c 4-pol***)*
Disinfection	**Selection** ▪ Temperature ▪ Sensor current ▪ Concentration
ISE	**Selection** ▪ Temperature ▪ pH ▪ Ammonium ▪ Nitrate ▪ Potassium ▪ Chloride
TU/TS TU	**Selection** ▪ Temperature ▪ Turbidity g/l *(only* **TU/TS***)* ▪ Turbidity FNU *(only* **TU/TS***)* ▪ Turbidity Formazine *(only* **TU***)* ▪ Turbidity solid *(only* **TU***)*
Nitrate	**Selection** ▪ Temperature ▪ NO3 ▪ NO3-N
Ultrasonic interface	**Selection** ▪ Temperature ▪ Interface ▪ Turbidity
SAC	**Selection** ▪ Temperature ▪ SAC ▪ Transm. ▪ Absorption ▪ COD ▪ BOD

Source of data	Measured value
Controller 1	**Selection** ▪ Bipolar *(only for current outputs)* ▪ Unipolar+ ▪ Unipolar-
Controller 2	
Mathematical functions	All the mathematical functions can also be used as a data source and the calculated value can be used as the measured value.

Outputting the controller manipulated variable via the current output
Unipolar+ Assign to the output to which an actuator that can increase the measured value is connected. **Unipolar-** Assign to the output to which an actuator that can decrease the measured value is connected.
To output the manipulated variable of a two-sided controller, positive manipulated variables and negative manipulated variables generally have to be output to different actuators, as most actuators are able to influence the process in one direction only (not in both). For this purpose, the instrument splits the bipolar manipulated variable y into two unipolar manipulated variables, y+ and y-.
Only the two unipolar manipulated variable parts are available for selection for outputting to modulated relays. If outputting the values via a current output, you also have the possibility of outputting the bipolar manipulated variable y to one current output only (split range).

10.4.2 Alarm relay and optional relays

The basic version of the device always has one alarm relay. Additional relays are also available depending on the version of the device.

The following functions can be output via a relay:
- Limit switch status
- Controller manipulated variable for controlling an actuator
- Diagnostic messages
- Status of a cleaning function in order to control a pump or a valve

You can assign a relay to multiple inputs in order to clean several sensors with just one cleaning unit, for example.

Menu/Setup/Outputs/Alarm relay or relay at channel no.		
Function	**Options**	**Info**
Function	**Selection** ▪ Off ▪ Limit switch ▪ Controller ▪ Diagnostics ▪ Cleaning (sensor) **Factory setting** ▪ Alarm relays: Diagnostics ▪ Other relays: Off	The following functions depend on the option selected. These versions are illustrated individually in the following sections to provide a clearer understanding of the options. **Function** = **Off** Switches off the relay function and means no further settings are required.

Outputting the status of a limit switch

Function = Limit switch		
Function	**Options**	**Info**
Source of data	**Selection** Limit switch 1 ... 8 **Factory setting** None	Select the limit switch via which the status of the relay is to be output. The limit switches are configured in the menu: **Setup/Additional functions/Limit switches**. Use the softkeys **ALL** and **NONE** to select or deselect all the limit switches in one go.

Outputting the manipulated variable of a controller

To output a controller manipulated variable via a relay, the relay is modulated. The relay is energized (pulse, t_1) and is then de-energized (interval, t_0).

Function = Controller		
Function	**Options**	**Info**
Source of data	**Selection** ▪ None ▪ Controller 1 ▪ Controller 2 **Factory setting** None	▶ Select the controller that should act as the data source.
Operating mode	**Selection** ▪ PWM ▪ PFM **Factory setting** PWM	PWM=pulse width modulation PFM=pulse frequency modulation

1. **PWM** (pulse width modulation):
   The duty cycle is varied within a period **T** ($T=t_1+t_0$). The cycle duration remains constant.

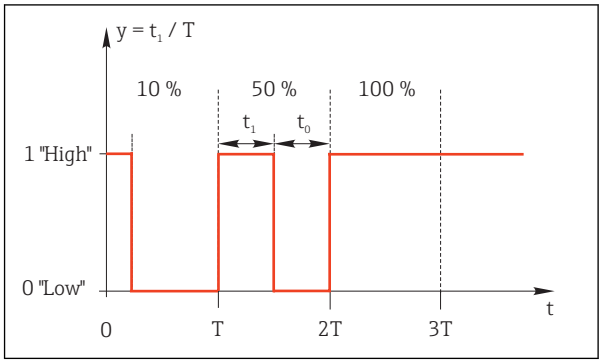

77 *Typical application: solenoid valve*

2. **PFM** (pulse frequency modulation):
   Here, pulses of a constant length (t_1) are output and the interval between the pulses varies (t_0). At a maximum frequency, $t_1 = t_0$.

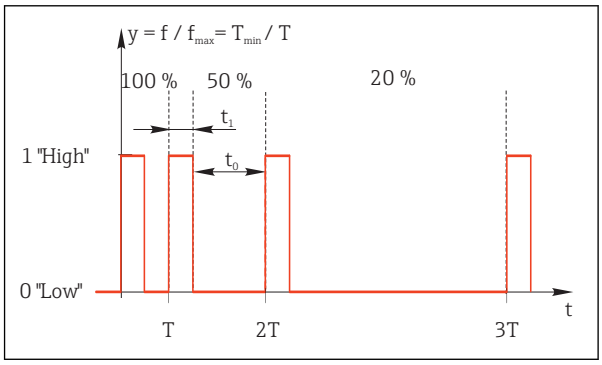

78 *Typical application: dosing pump*

Function = Controller		
Function	**Options**	**Info**
Actuator type	**Selection** ▪ None ▪ Unipolar(-) ▪ Unipolar(+) **Factory setting** None	Here you specify what part of the controller should power the relay. **Unipolar(+)** is the part of the manipulated variable which the controller uses to increase the process value (e. g. for heating purposes). On the other hand, select **Unipolar(-)** if you want to connect an actuator to the relay that causes the controlled variable to drop (e. g. for cooling purposes).
Cycle duration **Operating mode** = **PWM**	**Shortest turn-on time** to 999.0 s **Factory setting** 10.0 s	▶ Specify the cycle duration within which the duty cycle should be varied (only PWM).
The settings for **Cycle duration** and **Shortest turn-on time** mutually affect one another. The following applies **Cycle duration** ≥ **Shortest turn-on time**.		
Shortest turn-on time **Operating mode** = **PWM**	0.3 s to **Cycle duration** **Factory setting** 0.3 s	Pulses that are shorter than this limit value are not output in order to conserve the actuator.
Maximum frequency **Operating mode** = **PFM**	1 to 180 min^{-1} **Factory setting** 60 min^{-1}	Maximum number of pulses per minute The controller calculates the pulse duration based on this setting.

Outputting diagnostic messages via the relay

If a relay is defined as a diagnostic relay (**Function** = **Diagnostics**), it works in the **"fail-safe mode"**.
This means that the relay is always energized ("normally closed", n.c.) in the basic state if an error is not present. In this way it can also indicate a drop in voltage, for example.
The alarm relay always works in the failsafe mode.

You can output two categories of diagnostic messages via the relay:
- Diagnostic messages from one of the 4 Namur classes → 🖹 112
- Diagnostic messages which you have individually assigned to the relay output

A message is individually assigned to the relay output at 2 specific points in the menu:
- **Menu/Setup/General settings/Extended setup/Diagnostics settings/Diag. behavior** (device-specific messages)
- **Menu/Setup/Inputs/**<Sensor>**/Extended setup/Diagnostics settings/Diag. behavior** (sensor-specific messages)

Before being able to assign the relay output to a special message in **Diag. behavior** you must first configure **Outputs**/Relay x:y or **/Alarm relay/Function** = **Diagnostics** .

Function = Diagnostics		
Function	**Options**	**Info**
Operating mode	**Selection** ▪ as assigned ▪ Namur M ▪ Namur S ▪ Namur C ▪ Namur F **Factory setting** as assigned	**as assigned** If this option is selected, the diagnostic messages which you have individually assigned to the relay are output via the relay. **Namur M** ... **Namur F** If you decided to use one of the Namur classes, all the messages that are assigned to the individual class are output via the relay. You can also change the Namur class assignment for every diagnostic message. (**Menu/Setup/General settings/Extended setup/Diagnostics settings/Diag. behavior** or **Menu/Setup/Inputs/**<Sensor>**/Extended setup/Diagnostics settings/Diag. behavior**)
Attributed diagnostic messages **Operating mode** = **as assigned**	Read only	All the messages assigned to the relay output appear on the display. You do not have the option of editing the information here.

Outputting the status of a cleaning function

Function = Cleaning		
Function	**Options**	**Info**
Assignments	**Options** ▪ None ▪ Depends on the type of cleaning **Factory setting** None	Here you can specify how a cleaning function should be displayed for the relay. Depending on the cleaning program selected (**Menu/Setup/Additional functions/Cleaning**) you can choose from the following: ▪ **Cleaning type** = **Standard clean** **Cleaning 1 - Water**, **Cleaning 2 - Water**, **Cleaning 3 - Water**, **Cleaning 4 - Water** ▪ **Cleaning type** = **Chemoclean** **Cleaning 1 - Water**, **Cleaning 1 - Cleaner**, **Cleaning 2 - Water**, **Cleaning 2 - Cleaner**, **Cleaning 3 - Water**, **Cleaning 3 - Cleaner**, **Cleaning 4 - Water**, **Cleaning 4 - Cleaner** ▪ **Cleaning type** = **Chemoclean Plus** 4x **Cleaning 1 - %0V**, 4x **Cleaning 2 - %0V** [1]

1) %0V is variable text which you can assign in **Menu/Setup/Additional functions/Cleaning/Chemoclean Plus/Output label 1 ... 4** .

10.4.3 HART

Specify which device variables should be output via HART communication.

You can define a maximum of 16 device variables.

1. Specify the data source.
   ↳ You can choose from sensor inputs and controllers.
2. Select the measured value to be output.
3. Specify the behavior in "Hold" status. (Configuration options of **Source of data**, **Measured value** and **Hold behavior**) → 69

Please note that if you select **Hold behavior** = **Freeze** , the system not only flags the status but also actually "freezes" the measured value.

More information is provided in:
Operating Instructions "HART Communication", BA00486C

10.4.4 PROFIBUS DP

Device variables (device → PROFIBUS)

Here you can specify which process values should be mapped to the PROFIBUS function blocks and are thereby available for transmission via PROFIBUS communication.

You can define a maximum of 16 device variables (AI Blocks).

1. Define the data source.
   ↳ You can choose from sensor inputs, current inputs and mathematical functions.
2. Choose the measured value to be transmitted.
3. Define how the device should behave in the hold state. (Configuration options of **Source of data**, **Measured value** and **Hold behavior**) → 69

Please note that if you select **Hold behavior** = **Freeze** , the system not only flags the status but also actually "freezes" the measured value.

In addition, you can define 8 binary variables (DI Blocks):

1. Define the data source.
2. Select the limit switch or relay whose status is to be transmitted.

PROFIBUS variables (PROFIBUS → device)

A maximum of 4 analog (AO) and 8 digital (DO) PROFIBUS variables are available as measured values in the controller, limit switch or current output menus.

Example: Using an AO or DO value as the set point for the controller

Menu/Setup/Additional functions/Controller 1

1. In the specified menu, define PROFIBUS as the data source.
2. Select the desired analog output (AO) or digital output (DO) as the measured value.

Further information on "PROFIBUS" can be found in the Guideline for Communication via PROFIBUS, SD01188C

10.4.5 Modbus RS485 and Modbus TCP

Specify which process values should be output via Modbus RS485 Communication or via Modbus TCP.

In the case of Modbus RS485, you can switch between the RTU and the ASCII protocol.

You can define a maximum of 16 device variables.

1. Define the data source.
   ↳ You can choose from sensor inputs and controllers.
2. Select the measured value to be output.
3. Define how the device should behave in the hold state. (Configuration options of **Source of data**, **Measured value** and **Hold behavior**) → 🖹 69

Please note that if you select **Hold behavior** = **Freeze** , the system not only flags the status but also actually "freezes" the measured value.

Further information on "Modbus" can be found in the Guideline for Communication via Modbus, SD01189C

10.4.6 EtherNet/IP

Specify which process values should be output via EtherNet/IP communication.

You can define a maximum of 16 analog device variables (AI).

1. Define the data source.
   ↳ You can choose from sensor inputs and controllers.
2. Select the measured value to be output.
3. Define how the device should behave in the hold state. (Configuration options of **Source of data**, **Measured value** and **Hold behavior**) → 🖹 69
4. In the case of controllers, also specify the type of manipulated variable.

Please note that if you select **Hold behavior** = **Freeze** , the system not only flags the status but also actually "freezes" the measured value.

In addition you can define digital device variables (DI):

- Define the data source.
  ↳ You can choose from relays, binary inputs and limit switches.

For further information on "EtherNet/IP", see the Guideline for Communication via EtherNet/IP, SD01293C

10.5 Binary inputs and outputs

Hardware options, such as the "DIO" module with 2 digital inputs and 2 digital outputs or fieldbus module "485" enable the following:

- Via a digital input signal
  - measuring range switching for conductivity (upgrade code required, → 🖹 141)
  - switching between different calibration datasets in the case of optical sensors
  - external hold
  - a cleaning interval to be triggered
  - PID controller switch-on/switch-off, e.g. via the proximity switch of the CCA250
  - the use of the input as an "analog input" for pulse-frequency modulation (PFM)
- Via a digital output signal
  - diagnostic states, point level switches, or similar states transmitted statically (similar to a relay)
  - the dynamic transmission (comparable to a non-wearing "analog output") of PFM signals, e.g. to control dosing pumps

10.5.1 Application examples

Chlorine regulation with feedforward control

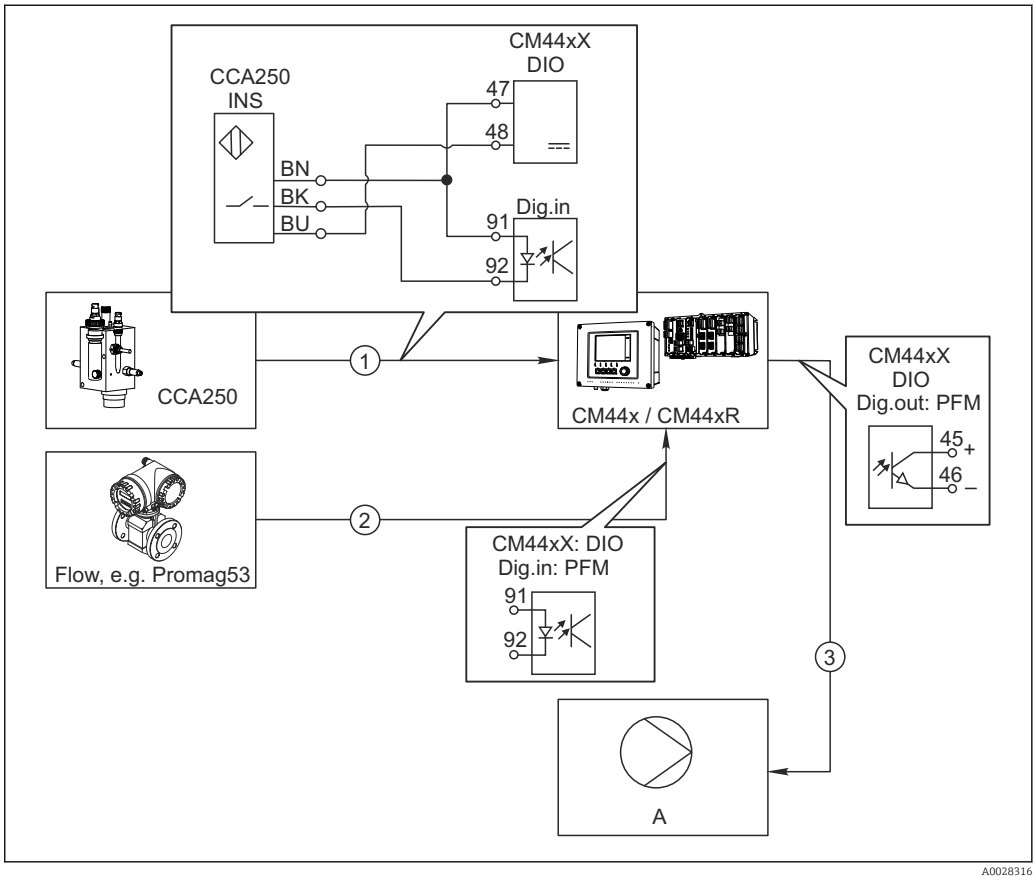

79 *Example of chlorine control with feedforward control*

1 Connection of the inductive proximity switch INS of CCA250 to the digital input of the DIO module
2 Connection of the signal from a flowmeter to the digital input of the DIO module
3 Activation of a (pulse) dosing pump via the digital output of the DIO module
A Dosing pump

Utilize the advantage of the effectively wear-free control with binary outputs versus a control system with relay. With pulse frequency modulation (PFM), it is possible to achieve virtually continuous dosing using a dosing pump with higher input frequency.

1. Connect the INS proximity switch of the CCA250 assembly to a digital input of the DIO module (e.g. slot 6, port 1).
2. In the software, configure a controller and as the source select the binary input (e.g.**Binary input 1**) to which the proximity switch is connected. (**Menu/Additional functions/Controllers/Controller 1/Controller Enable** = **Binary input 1**)
3. **Signal type**: For the selected input, select the factory setting (**Static signal**).
4. Connect the measured value of a flowmeter to the second input of the DIO module (e.g. slot 6, port 2).
5. **Signal type**: for this input, select **PFM** . (**Menu/Inputs/Binary input 6:2/Signal type** = **PFM**)
6. **Input mode**: select the corresponding measured value (**Flow rate**).
   ↳ You can now use the input you have just configured as the disturbance variable for your controller [1)].

1) An activation code, Order No. 71211288, is necessary for the "feedforward control" function.

7. **Disturbance variable**: in the controller menu, select the binary input to which you have connected the flow measured value. (**Menu**/**Additional functions**/**Controllers**/**Controller 1**/**Disturbance variable**/**Source of data** = **Binary input 6:2** and **Measured value** = **PFM value**)
8. You can activate a dosing pump through PFM via a digital output of the DIO module. Connect the pump to an output of the DIO module (e.g. slot 6, port 1) and select the following settings in the menu: **Menu**/**Outputs**/**Binary output 6:1**/**Signal type** = **PFM** and **Source of data** = **Controller 1**.

Take the direction of action of your dosing into account. Select the correct parameter (**Actuator type** = **Unipolar+** or **Unipolar-**).

You must make additional settings in the controller menu to fully customize the control to suit your process conditions.

CM44x as the cleaning master

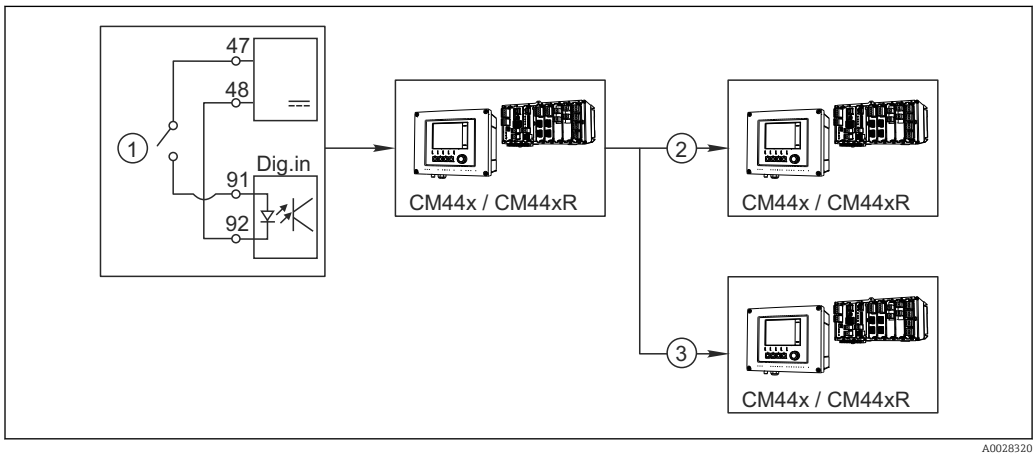

80 Example of a central cleaning control

1 External cleaning trigger at the binary input
2 Transferring the external hold over binary output to other measuring devices without connected cleaning functions
3 Transferring the cleaning trigger over a binary output to other self-cleaning measuring points

1. An external trigger actuates a cleaning operation at the master.
   A cleaning unit is connected via a relay or a binary output, for example.
2. The cleaning trigger is transferred to another device via a binary output. This does not have its own connected cleaning unit, but its sensors are installed in the medium affected by cleaning the master and are set to hold by the trigger.
3. The trigger is transferred via an additional binary output to another device, whose connected sensors have their own cleaning units. The signal can be used to simultaneously activate a self-cleaning with the master.

10.5.2 Binary input configuration

Menu/Setup/Inputs/Binary input x:y [1]		
Function	**Options**	**Info**
Binary input	**Selection** ▪ Off ▪ On **Factory setting** On	Switches the input on/off
Signal type	**Selection** ▪ Static signal ▪ PFM **Factory setting** Static signal	▶ Select the signal type. **Static signal** Use this setting to read out the position of, for example, an on/off switch, an inductive proximity switch or a PLC binary output. Signal application: for measuring range switching, acceptance of an external hold, as a cleaning trigger or for controller activation **PFM** The PFM setting produces a pulse-frequency-modulated signal that is subsequently available on the device as a quasi-continuous process value. Example: Measuring signal of a flowmeter
Signal type = **Static signal**		
Signal level	**Selection** ▪ Low ▪ High **Factory setting** High	Specifies which input signal levels should activate, for example, measuring range switching or a cleaning. **Low** Input signals between 0 and 5 V DC **High** Input signals between 11 and 30 V DC
Signal type = **PFM**		
Max. frequency	100.00 to 1000.00 Hz **Factory setting** 1000.00 Hz	Maximum frequency of the PFM input signal Is to equal the maximum possible upper limit of the measuring range. If the value selected is too small, higher frequencies will not be detected. If the value is too large, on the other hand, the resolution for small frequencies will be relatively inexact.
Meas. value format	**Selection** ▪ # ▪ #.# ▪ #.## ▪ #.### **Factory setting** #.##	▶ Specify the number of decimal places.

Menu/Setup/Inputs/Binary input x:y [1]		
Function	**Options**	**Info**
Input mode	**Selection** ▪ Frequency ▪ Parameter ▪ Flow rate **Factory setting** Frequency	**Frequency** Display in Hz in the measuring menu **Parameter** You subsequently determine the parameter name and unit. These are then displayed in the measuring menu. **Flow rate** For connecting a flowmeter
Parameter name **Input mode** = **Parameter**	Customized text, 16 characters	▶ Define a name for the parameter, e.g. "Pressure".
Unit of measure **Input mode** = **Parameter**	Customized text, 16 characters	▶ Specify the unit for your parameter, e.g. "hPa".
Flow rate unit **Input mode** = **Flow rate**	**Selection** ▪ l/s ▪ l/h ▪ m^3/s ▪ m^3/h ▪ cfs ▪ cfd ▪ mgd **Factory setting** l/s	▶ Define the unit for the flow. **cfs** = cubic feet per second **cfd** = cubic feet per day **mgd** = mega gallon per day
Lower range value **Input mode** = **Parameter** *or* **Flow rate**	-2000.00 to 0.00 **Factory setting** 0.00	The start of measuring range corresponds to a frequency of 0 Hz. Your previously defined unit is additionally displayed.
Upper range value **Input mode** = **Parameter** *or* **Flow rate**	0.00 to 10000.00 **Factory setting** 0.00	The end of measuring range corresponds to the maximum frequency defined above. Your previously defined unit is additionally displayed.
Damping	0 to 60 s **Factory setting** 0 s	The damping causes a floating average curve of the measured values over the time specified.

1) x:y = slot no. : input number

10.5.3 Configuration of binary outputs

Menu/Setup/Outputs/Binary output x:y [1]		
Function	**Options**	**Info**
Binary output	**Selection** ▪ Off ▪ On **Factory setting** On	Switches the output on/off
Signal type	**Selection** ▪ Static signal ▪ PFM **Factory setting** Static signal	▶ Select the signal type. **Static signal** Comparable to a relay: output of a diagnostic status or a limit switch **PFM** You can output a measured value, e. g. the chlorine value or the manipulated variable of a controller. It functions as a "wear-free" switching contact that can be used to activate a dosing pump, for example.

Menu/Setup/Outputs/Binary output x:y [1]		
Function	**Options**	**Info**
Signal type = **Static signal**		
Function	**Selection** ▪ None ▪ Limit switches ▪ Diagnostics message ▪ Cleaning **Factory setting** None	Source for the outputted switching state The following functions depend on the option selected. **Function** = **None** Switches off the function. There are no other settings.
Assignments **Function** = **Cleaning**	**Multiple selection** ▪ **Cleaning 1 - Water** ... ▪ Cleaning 4 - Cleaner	Here you can decide which binary outputs should be used for activating the valves and pumps. Here you concretely assign a control signal to the binary output for the cleaner/water dosing of a cleaning program. You can define cleaning programs under: **Menu**/**Setup**/**Additional functions**/**Cleaning**.
Data sources **Function** = **Limit switches**	**Multiple selection** Limit switch 1 ... 8	▶ Select the limit switches that should be output via the binary output. Configuration of the limit switches: **Menu**/**Setup**/**Additional functions**/**Limit switches**.
Operating mode **Function** = **Diagnostics message**	**Selection** ▪ as assigned ▪ Namur M ▪ Namur S ▪ Namur C ▪ Namur F **Factory setting** as assigned	**as assigned** With this selection, the diagnosis messages are transmitted over the binary output that you individually allocated to it. **Namur M ... F** When you choose one of the Namur classes, all messages allocated to that respective class are output. You can change the Namur class assignment for every diagnostic message → 🖹 113.
Signal type = **PFM**		
Max. frequency	1.00 to 1000.00 Hz **Factory setting** 1000.00 Hz	Maximum frequency of the PFM output signal Is to equal the maximum possible upper limit of the measuring range.
Meas. value format	**Selection** ▪ # ▪ #.# ▪ #.## ▪ #.### **Factory setting** #.##	▶ Specify the number of decimal places.

Menu/Setup/Outputs/Binary output x:y [1]		
Function	**Options**	**Info**
Source of data	**Selection** ▪ None ▪ Sensor inputs ▪ Binary inputs ▪ Controller ▪ Fieldbus signals ▪ Mathematical functions **Factory setting** None	Source, whose value should be read out as a frequency over the binary output.
Measuring value **Source of data** ≠ *Controller*	**Selection** Depends on: Source of data	▶ Choose the measured value which should be output as the frequency via the binary output.
Actuator type **Source of data** = *Controller*	**Selection** ▪ None ▪ Bipolar ▪ Unipolar+ ▪ Unipolar- **Factory setting** None	▶ Determines which controller component the connected actuator, e. g. the dosing pump, should trigger. **Bipolar** "Split range" **Unipolar+** Part of the manipulated variable that the controller uses to increase the process value **Unipolar-** For connected actuators that decrease the controlled variable
Hold behavior	**Selection** ▪ Freeze ▪ Fixed value ▪ None **Factory setting** None	**Freeze** The device freezes the last value. **Fixed value** You define a fixed current value that is transmitted at the output. **None** A hold does not affect this output.
Hold value **Hold behavior** = **Fixed value**	0 to 100 % **Factory setting** 0 %	
Error behavior	**Selection** ▪ Freeze ▪ Fixed value **Factory setting** Fixed value	**Freeze** The device freezes the last value. **Fixed value** You define a fixed current value that is transmitted at the output.
Error value **Error behavior** = **Fixed value**	0 to 100 % **Factory setting** 0 %	

1) x:y = slot no. : input number

10.6 Additional functions

10.6.1 Limit switches

There are different ways to configure a limit switch:
- Assigning a switch-on and switch-off point
- Assigning a switch-on and switch-off delay for a relay
- Setting an alarm threshold and also outputting an error message
- Starting a cleaning function

Menu/Setup/Additional functions/Limit switches/Limit switch 1 … 8		
Function	**Options**	**Info**
Source of data	**Selection** ▪ None ▪ Sensor inputs ▪ Binary inputs ▪ Controller ▪ Fieldbus signals ▪ Mathematical functions ▪ MRS set 1 … 2 **Factory setting** None	▶ Specify the input or output which is to be the data source for the limit switch. The sources of data on offer depend on your device version. You can choose from connected sensors, binary inputs, fieldbus signals, mathematical functions, controllers and sets for measuring range switching.
Measuring value	**Selection** Depends on: Source of data	▶ Select the measured value, see the following table.

Measured value *depending on the* **Source of data**

Source of data	Measured value
pH Glass pH ISFET	**Selection** ▪ Raw value mV ▪ pH ▪ Temperature
ORP	**Selection** ▪ Temperature ▪ ORP mV ▪ ORP %
Oxygen (amp.) Oxygen (opt.)	**Selection** ▪ Temperature ▪ Partial pressure ▪ Concentration liquid ▪ Saturation ▪ Raw value nA *(only* **Oxygen (amp.)***)* ▪ Raw value µs *(only* **Oxygen (opt.)***)*
Cond i Cond c Cond c 4-pol	**Selection** ▪ Temperature ▪ Conductivity ▪ Resistance *(only* **Cond c***)* ▪ Concentration *(only* **Cond i** *and* **Cond c 4-pol***)*
Disinfection	**Selection** ▪ Temperature ▪ Sensor current ▪ Concentration
ISE	**Selection** ▪ Temperature ▪ pH ▪ Ammonium ▪ Nitrate ▪ Potassium ▪ Chloride

Source of data	Measured value
TU/TS	**Selection** ▪ Temperature ▪ Turbidity g/l *(only* **TU/TS***)* ▪ Turbidity FNU *(only* **TU/TS***)* ▪ Turbidity Formazine *(only* **TU***)* ▪ Turbidity solid *(only* **TU***)*
TU	
Nitrate	**Selection** ▪ Temperature ▪ NO3 ▪ NO3-N
Ultrasonic interface	**Selection** ▪ Temperature ▪ Interface ▪ Turbidity
SAC	**Selection** ▪ Temperature ▪ SAC ▪ Transm. ▪ Absorption ▪ COD ▪ BOD
Controller 1	**Selection** ▪ Bipolar *(only for current outputs)* ▪ Unipolar+ ▪ Unipolar-
Controller 2	
Mathematical functions	All the mathematical functions can also be used as a data source and the calculated value can be used as the measured value.

You can monitor the manipulated variable by assigning the controller manipulated variable to a limit switch (e. g. configure a dosing time alarm).

Menu/Setup/Additional functions/Limit switches/Limit switch 1 … 8		
Function	**Options**	**Info**
Cleaning program	**Selection** ▪ None ▪ Cleaning 1 … 4 **Factory setting** None	Use this function to choose which cleaning instance should start when the limit switch is active.
Function	**Selection** ▪ Off ▪ On **Factory setting** Off	Activating/deactivating the limit switch
Operating mode	**Selection** ▪ Above limit check ▪ Below limit check ▪ In range check ▪ Out of range check ▪ Change rate **Factory setting** Above limit check	Type of limit value monitoring: ▪ Limit value overshoot or undershoot→ 81 ▪ Measured value within or outside a range → 82 ▪ Rate of change → 84

Menu/Setup/Additional functions/Limit switches/Limit switch 1 … 8

Function	Options	Info
Limit value	Settings depend on the measured value	**Operating mode** = **Above limit check** *or* **Below limit check**

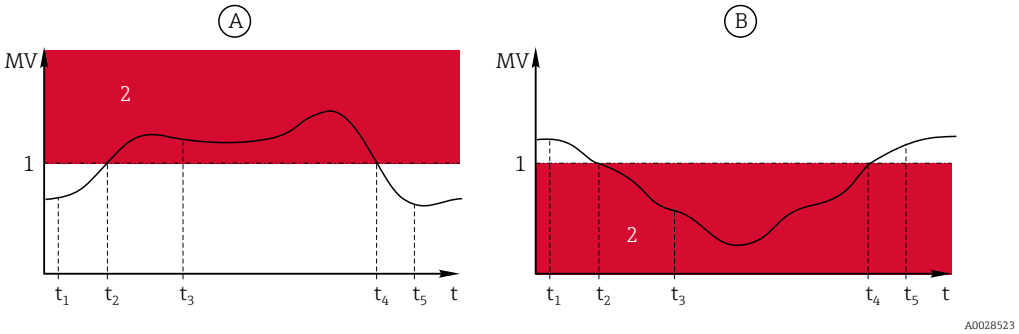

81 Exceeding (A) and undershooting (B) a limit value (without hysteresis and switch-on delay)

1 Limit value
2 Alarm range
$t_{1,3,5}$ No action
$t_{2,4}$ An event is generated

- If the measured values (MV) are increasing, the relay contact is closed when the on-value is exceeded (**Limit value** + **Hysteresis**) and the start delay (**Start delay**) has elapsed.
- If the measured values are decreasing, the relay contact is reset when the off-value is undershot (**Limit value** - **Hysteresis**) and following the drop-out delay (**Switch off delay**).

Range lower value Range upper value	Settings depend on the measured value	**Operating mode** = **Out of range check** *or* **In range check**

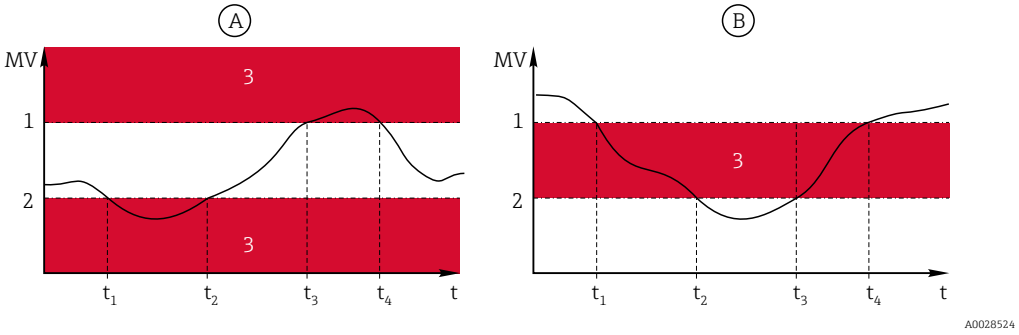

82 Range monitoring outside (A) and within (B) a range (without hysteresis and switch-on delay)

1 End of range
2 Start of range
3 Alarm range
t_{1-4} An event is generated

- If the measured values (MV) are increasing, the relay contact is closed when the on-value is exceeded (**Range lower value** + **Hysteresis**) and the start delay (**Start delay**) has elapsed.
- If the measured values are decreasing, the relay contact is reset when the off-value is undershot (**Range upper value** - **Hysteresis**) and following the drop-out delay (**Switch off delay**).

Menu/Setup/Additional functions/Limit switches/Limit switch 1 ... 8		
Function	**Options**	**Info**
Hysteresis	Settings depend on the measured value	**Operating mode** ≠ **Change rate** The hysteresis is needed to ensure a stable switching behavior. The device software adds or subtracts the value set here to/from the limit value (**Limit value**, **Range lower value** or **Range upper value**). This results in double the **Hysteresis**value for the hysteresis range around the limit value. An event is then only generated if the measured value (MV) completely passes through the hysteresis range.
Start delay **Operating mode** ≠ **Change rate**	0 to 9999 s **Factory setting** 0 s	Synonyms: pick-up and drop-out delay
Switch off delay **Operating mode** ≠ **Change rate**		
Delta value	Settings depend on the measured value	**Operating mode** = **Change rate** The slope of the measured value (MV) is monitored in this mode. An event is generated if, in the given timeframe (**Delta time**), the measured value increases or decreases by more than the specified value (**Delta value**). No further event is generated if the value continues to experience such a steep increase or decrease. If the slope is back below the limit value, the alarm status is reset after a preset time (**Auto Confirm**). Events are triggered by the following conditions in the example given: t_2 - t_1 < **Delta time** and ΔMV1 > **Delta value** t_4 - t_3 >**Auto Confirm** and ΔMV2 < **Delta value** t_6 - t_5 < **Delta time** and ΔMV3 > **Delta value**
Delta time	00:01 to 23:59 **Factory setting** 01:00	
Auto Confirm	00:01 to 23:59 **Factory setting** 00:01	

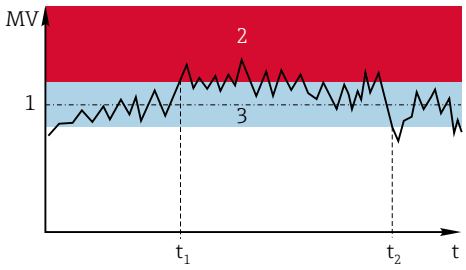

83 Hysteresis taking the example of limit value overshoot

1 Limit value
2 Alarm range
3 Hysteresis range
$t_{1,2}$ An event is generated

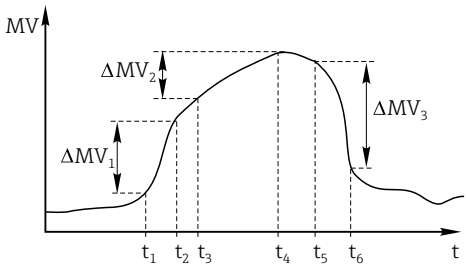

84 Rate of change

10.6.2 Controller

Controller structure in Laplace representation

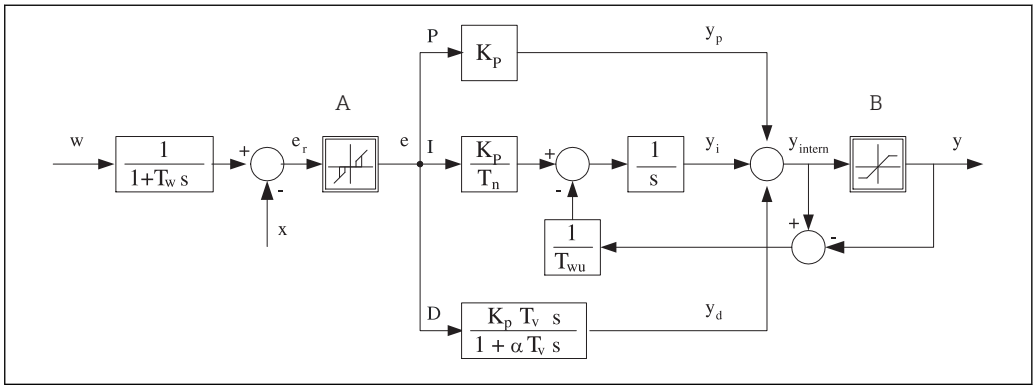

85 *Block diagram of the controller structure*

A	*Neutral zone*	*I*	*Integral value*
B	*Output limiting*	*D*	*Derivative value*
K_p	*Gain (P-value)*	αT_V	*Damping time constant with α = 0 to 1*
T_n	*Integral action time (I-value)*	*e*	*Control deviation*
T_v	*Derivative action time (D-value)*	*w*	*Set point*
T_w	*Time constant for set point damping*	*x*	*Controlled variable*
T_{wu}	*Time constant for anti-windup feedback*	*y*	*Manipulated variable*
P	*Proportional value*		

The controller structure of the device comprises set point damping at the input to prevent erratic changes in the manipulated variable if the set point changes. The difference between the set point w and the controlled variable (measured value) X results in the control deviation which is filtered by a neutral zone.

The neutral zone is used to suppress control deviations (e) that are too small. The control deviation thus filtered is now fed to the actual PID controller which divides into 3 parts based on the P (proportional), I (integral) and D (derivative) values (top-down). The integral section (middle) also comprises an anti-windup mechanism for limiting the integrator. A low-pass filter is added to the D-section to damp hard D-terms in the manipulated variable. The sum of the 3 sections results in the internal controller manipulated variable which is limited according to the settings (for PID-2s to -100% to +100%).

The graphic does not illustrate a downstream filter for limiting the rate of change of the manipulated variable (can be configured in the menu in **Max y change rate**).

In the menu do not configure the gain K_p. Instead configure the reciprocal value, the proportional band X_p ($K_p=1/X_p$).

Configuration

Make the following decisions to configure a controller:
- (1) What type of process can your process be assigned to? → **Process type**
- (2) Should it be possible to influence the measured variable (controlled variable) in one direction or in both directions? One-sided or two-sided controller, → **Controller type**
- (3) What should be the controlled variable (sensor, measured value)? → **Controlled variable**
- (4) Do you have a disturbance variable that should be active at the controller output? → **Disturbance variable**

- (5) Specify the parameters for the controller:
  - Set point, → **Setpoint**
  - Neutral zone, → **Xn**
  - Proportional band, → **Xp**
  - Integral action time (I-value), → **Tn**
  - Derivative action time (D-value), → **Tv**
- (6) What should the controller do in the event of a hold (measured error, sensor replacement, cleaning etc.)?
  - Pause or continue with dosing? →**Hold behavior/Manipulated Variable**
  - At the end of a hold, continue or restart the control loop (affects I-value)? →**Hold behavior/State**
- (7) How should the actuator be triggered?
  - **Unipolar+**: assign this setting to the output for an actuator which can increase the measured value.
  - **Unipolar-**: assign this setting to the output for an actuator which can decrease the measured value.
  - **Bipolar**: select this setting if you want to output the manipulated variable via one current output only (split range).
- (8) Configure the outputs and switch on the controller.

Menu/Setup/Additional functions/Controller 1 … 2		
Function	**Options**	**Info**
Control	**Selection** ▪ Off ▪ Automatic ▪ Manual mode **Factory setting** Off	▶ First configure the controller and leave the switch at the factory setting (**Off**). Once you have made all the settings, you can assign the controller to an output and switch it on.
▶ Manual mode		
y	-100 to 100 % **Factory setting** 0 %	▶ Specify the manipulated variable that should be output in manual mode.
y Actual output	Read only	Manipulated variable actually output.
Setpoint		Current set point
x		Current measured value
Disturbance variable		Current measured value of disturbance variable
Norm. disturb. value		
Name	Free text	▶ Give the controller a name so you can identify it later on.
Controller Enable	**Selection** ▪ None ▪ Binary inputs ▪ Limit contactors ▪ Fieldbus variables **Factory setting** None	In connection with the DIO module, you can select a binary input signal, e.g. from an inductive proximity switch, as a source for enabling the controller.
Setup Level	**Selection** ▪ Standard ▪ Advanced **Factory setting** Standard	Changes the number of parameters that can be configured. → **Parameters** → 🖹 92 **Standard**: If you choose this, the other controller parameters are active nevertheless. The factory settings are used. These suffice in most cases.

Menu/Setup/Additional functions/Controller 1 … 2		
Function	**Options**	**Info**
Process type	**Selection** ▪ Inline ▪ Batch **Factory setting** Inline	▶ Decide what type of process best describes your particular process.

Batch process
The medium is in a closed system.
The task of the control system is to dose in such a way that the measured value (controlled variable) changes from its start value to its target value. No more dosing is needed once the set point has been reached and the system is stable. If the target value is overshot, a two-sided control system can compensate for this. In the case of 2-sided batch control systems, a neutral zone is used/configured to suppress oscillations around the set point.

In-line process
In an in-line process, the control system works with the medium flowing by in the process.
Here, the controller has the task of using the manipulated variable to set a mixture ratio between the medium and dosing agent such that the resulting measured variable corresponds to the set point. The properties and volume of the medium flow can change at any time and the controller has to react to these changes on a continuous basis. If the flow rate and medium remain constant, the manipulated variable can also assume a fixed value once the process has settled. Since the control process is never "finished" here, this type of control is also referred to as continuous control.

A mixture of both process types can often be found in practice: the semi-batch process. Depending on the ratio between the flow and the container volume, this arrangement behaves either like a batch process or an in-line process.

Controller type	**Selection** ▪ PID 1-sided ▪ PID 2-sided **Factory setting** PID 2-sided	Depending on which actuator you have connected, you influence the process in only one direction (e.g. heating) or in both directions (e.g. heating and cooling).

A 2-sided controller can output a manipulated variable in the range from -100 % to +100 %, i.e. the manipulated variable is bipolar. The manipulated variable is positive if the controller should increase the process value. In the case of a pure P-controller, this means that the value of the controlled variable x is smaller than the set point w. On the other hand, the manipulated variable is negative if the process value should be decreased. The value for x is greater than the set point w.

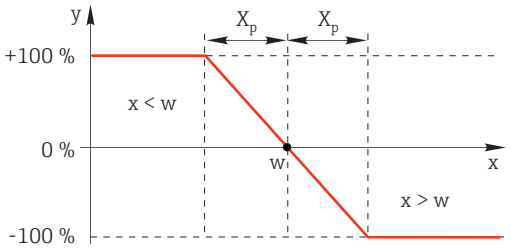

86 Relationship $y = (w-x)/X_p$

Menu/Setup/Additional functions/Controller 1 ... 2		
Function	**Options**	**Info**
Effective direction **Controller type** = **PID 1-sided**	**Selection** ▪ Direct ▪ Reverse **Factory setting** Reverse	In what direction should the controller influence the measured value? ▪ The measured value should increase as a result of dosing (e.g. heating) → **Reverse** ▪ The measured value should decrease as a result of dosing (e.g. cooling) → **Direct**
A 1-sided controller has a unipolar manipulated variable, i.e. it can only influence the process in one direction. **Reverse**: If the controller should increase the process value, set this as the direction of action. The controller becomes active when the process value is too small (range A). **Direct**: With this direction of action, the controller acts as a "downwards controller". It becomes active when the process value (e.g. the temperature) is too high (range B). 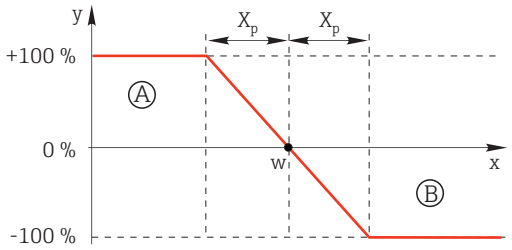 87 *Red: overlap between the curves of the two 1-sided controllers.*		
▶ Controlled variable		
Source of data	**Selection** ▪ None ▪ Sensor inputs ▪ Current inputs ▪ Fieldbus signals ▪ Binary inputs ▪ Mathematical functions **Factory setting** None	▶ Specify the input or output which should be the source of data for the controlled variable.
Measured value	**Selection** Depends on **Source of data** **Factory setting** None	▶ Specify the measured value that should be your controlled variable. You can use different measured values depending on the data source. → 82
▶ Setpoint		Target value of the controlled variable This menu is not displayed if you selected a fieldbus as the source (**Source of data** = fieldbus).
Setpoint	Range of adjustment and factory setting depending on the **Source of data**	▶ Specify the target value for the controlled variable.
Tw **Setup Level** = **Advanced**	0.0 to 999.9 s **Factory setting** 2.0 s	Time constant for the set point damping filter
▶ Disturbance variable		optional, activation code necessary

Menu/Setup/Additional functions/Controller 1 ... 2		
Function	**Options**	**Info**
In the case of "flowing medium" (in-line) controls, the flow rate may not be constant. In some circumstances, strong fluctuations are possible. In the case of a settled control system in which the flow rate is suddenly halved, it is desirable that the dosed quantity from the controller is also directly halved. In order to achieve this type of "flow-rate-proportional" dosing, this task is not left to the I-component of the controller, but rather one enters the (to be measured) flow rate as disturbance variable z multiplicative at the controller output. 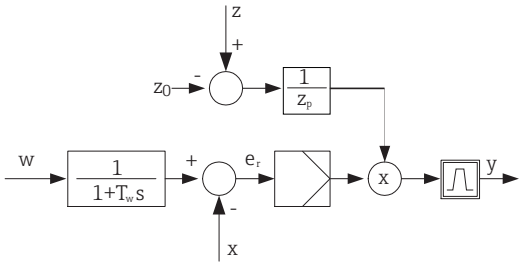 Strictly speaking, feedforward control involves an open-loop control system, since its effect is not measured directly. That means that the feed flow is directed exclusively forward. Hence the designation "feedforward control." For the additive feedforward control that is alternatively available in the device, the (standardized) disturbance variable is added to the controller manipulated variable. This enables you to set up a type of variable base load dosing. The standardization of the disturbance variable is required both for multiplicative and for additive feedforward control and is done using parameters Z_0 (zero point) and Z_p (proportional band): $z_n = (z - z_0)/z_p$ 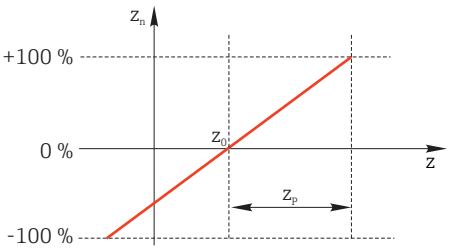 **Example** Flowmeter with measuring range 0 to 200 m^3/ h The controller would currently dose 100% without feedforward control. The feedforward control should be configured such that at z = 200m^3/h, the controller still doses at 100% (z_n = 1). If the flow rate drops, the dosing rate should be reduced, and at a flow rate of less than 4 m^3/h, dosing should stop entirely (z_n = 0). → Select the zero point z_0 = 4 m^3/h and the proportional band Z_p= 196 m^3/h.		
Function	**Selection** ▪ Off ▪ Multiply ▪ Add **Factory setting** Off	Selecting multiplicative or additive feedforward control
Source of data	**Selection** ▪ None ▪ Sensor inputs ▪ Current inputs ▪ Fieldbus signals ▪ Binary inputs ▪ Mathematical functions **Factory setting** None	▶ Specify the input which should be the source of data for the disturbance variable.

Menu/Setup/Additional functions/Controller 1 ... 2

Function	Options	Info
Measured value	**Selection** Depends on **Source of data** **Factory setting** None	▶ Specify the measured value that should be your disturbance variable. You can use different measured values depending on the data source. → 🖹 82
Zp	Range of adjustment depending on the selection of the measured value	Proportional band -->
Z0		Zero point
▶ Parameters		

The Liquiline PID controller has been implemented in the serial structural form, i.e. it has the following parameters:
- Integral action time T_n
- Derivative action time T_v
- Proportional band X_p

Setup Level = **Advanced**: With this setup level, you can also configure the following:
- Time constant T_{wu}
- Time constant α
- Width of the neutral zone X_n
- Width of the hysteresis range of the neutral zone X_{hyst}
- Clock time of the controller

Tn	0.0 to 9999.0 s **Factory setting** 0.0 s	The integral action time specifies the effect of the I-value If **Tn** > 0 the following applies: **Clock** < **Twu** < 0.5(**Tn** + **Tv**)

The integral action time is the time needed in a step-function response to achieve a change in the manipulated variable - as a result of the I effect - which has the same magnitude as the P-value.

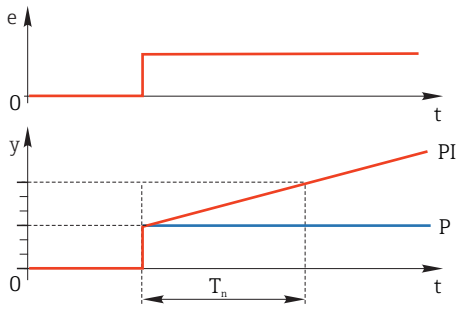

e = control deviation, e=w-x (set point controlled variable)

Menu/Setup/Additional functions/Controller 1 … 2		
Function	**Options**	**Info**
Twu	0.1 to 999.9 s **Factory setting** 20.0 s	Time constant for anti-windup feedback The lower the value the greater the integrator inhibition. Exercise extreme caution when making changes. **Clock** < **Twu** < 0.5(**Tn** + **Tv**)
Tv	0.1 to 999.9 s **Factory setting** 0.0 s	The derivative action time specifies the effect of the D-value
The derivative action time is the time by which the ramp response of a PD controller reaches a specific value of the manipulated variable at an earlier stage than it would solely as a result of its P-value. 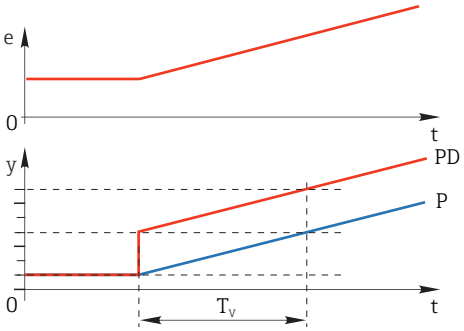 		
alpha	0.0 to 1.0 **Factory setting** 0.3	Affects the additional damping filter of the D-controller. The time constant is calculated from $\alpha \cdot T_v$.
Process balance **Controller type** = **PID 2-sided**	**Selection** ▪ Symmetric ▪ Asymmetric **Factory setting** Symmetric	**Symmetric** There is only one control gain and this applies for both sides of the process. **Asymmetric** You can set the control gain individually for both sides of the process.
Xp **Process balance** = **Symmetric**	Range of adjustment and factory setting depending on the **Source of data**	Proportional band, reciprocal value of the proportional gain K_p As soon as controlled variable x deviates more than x_p from the set point w, manipulated variable y reaches 100%.
Xp Low **Process balance** = **Asymmetric**	Range of adjustment and factory setting depending on the **Source of data**	x_p for y < 0 (manipulated variable < 0)
Xp High **Process balance** = **Asymmetric**		x_p for y > 0 (manipulated variable > 0)
Xn	Range of adjustment and factory setting depending on the **Source of data**	Tolerance range about the set point that prevents minor oscillations about the set point if using two-sided control loops.
XN Low **Process balance** = **Asymmetric**	Range of adjustment and factory setting depending on the **Source of data**	x_n for x < w (controlled variable < set point)
XN High **Process balance** = **Asymmetric**		x_n for x > w (controlled variable > set point)

Menu/Setup/Additional functions/Controller 1 ... 2		
Function	**Options**	**Info**
XHyst	0.0 to 99.9 % **Factory setting** 0.0 %	Width of the hysteresis range of the neutral zone, relative component of x_n
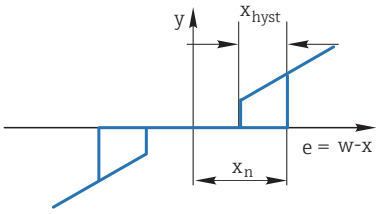 The graphic illustrates the manipulated variable (with a pure P-controller) over the control deviation e (set point minus controlled variable). Very low control deviations are set to zero. Control deviations > x_n are processed "in the normal way". Via x_{hyst} it is possible to configure a hysteresis to suppress oscillations at the edges.		
Clock	0.333 to 100.000 s **Factory setting** 1.000 s	**Expert setting** Only change the clock time of the controller if you know exactly what you are doing. **Clock** < **Twu** < 0.5(**Tn** + **Tv**)
Max y change rate	0.00 to 1.00 **Factory setting** 0.40	Limits the change of the output variable A value of 0.5 permits a maximum manipulated variable change of 50 % within one second.
▶ Hold behavior		Hold=measured value is no longer reliable
Manipulated Variable	**Selection** ▪ Freeze ▪ Fixed value **Factory setting** Freeze	How should the controller react to a measured value that is no longer reliable? **Freeze** The manipulated variable is frozen at the current value **Fixed value** Manipulated variable is set to 0 (no dosing)
State	**Selection** ▪ Freeze ▪ Reset **Factory setting** Freeze	Internal controller status **Freeze** No change **Reset** After a hold, the control system starts from scratch, and settling time takes place again.
▶ Outputs		Goes to the menu **Outputs** → 69
▶ Controller assignment view		Shows an overview of the inputs and outputs used

10.6.3 Cleaning programs

⚠ CAUTION

Cleaning not switched off during calibration or maintenance activities

Risk of injury due to medium or cleaning agent!

- ▶ If a cleaning system is connected, switch it off before removing a sensor from the medium.
- ▶ If you wish to check the cleaning function and have therefore not switched off the cleaning system, wear protective clothing, goggles and gloves or take other appropriate measures.

Cleaning types

The user can choose from the following cleaning types:
- Standard clean
- Chemoclean
- Chemoclean Plus

State of cleaning: Indicates whether the cleaning program is active or not. This is for information purposes only.

Selecting the cleaning type

1. **Menu/Setup/Additional functions/Cleaning**: Select a cleaning program.
   ↳ You can configure 4 different types of cleaning which you can assign individually to the inputs.
2. **Cleaning type**: For each cleaning program decide which type of cleaning should be performed.

Standard cleaning

Standard cleaning involves cleaning a sensor with compressed air, for instance, as performed with the ion-selective sensor CAS40D (connection of cleaning unit for → 33CAS40D)

Menu/Setup/Additional functions/Cleaning/Cleaning 1 ... 4/Standard clean		
Function	**Options**	**Info**
Cleaning time	5 to 600 s **Factory setting** 10 s	Cleaning duration The cleaning duration and interval depend on the process and sensor. ▶ Determine the variables empirically or based on experience.

▶ Define the cleaning cycle→ 97.

Chemoclean

An example is the use of the CYR10 injector unit to clean pH glass sensors. (CYR10 connection → 33)

Menu/Setup/Additional functions/Cleaning/Cleaning 1 ... 4/Chemoclean		
Function	**Options**	**Info**
Cleaning time	0 to 900 s **Factory setting** 5 s	Cleaning duration
Prerinse time	0 to 900 s **Factory setting** 0 s	The cleaning duration, pre-rinse and post-rinse times and the interval depend on the process and sensor. Determine the variables empirically or based on experience.
Postrinse time		

Chemoclean Plus

An example is the use of the CYR10 injector unit to clean pH glass sensors. (CYR10 connection → 🖹 33)

Menu/Setup/Additional functions/Cleaning/Cleaning 1 … 4/Chemoclean Plus/ChemoCleanPlus setup		
Function	**Options**	**Info**
Cleaning steps setup	Table to create a time program	You define a maximum of 30 program steps which should be performed one after the other. For each step enter the duration [s] and the state (0 = "off", 1 = "on") of each relay or output. You can specify the number and name of the outputs further down in the menu. See below for an example of programming.
Failsafe step setup	Table view	▶ In the table specify the states that the relays or outputs should assume in the event of an error.
Limit contacts	0 to 2	▶ Select the number of digital input signals (e. g. from limit position switches of the retractable assembly).
Limit contact 1 … 2	**Selection** ▪ Binary inputs ▪ Fieldbus signals	▶ Define the signal source for each limit position switch.
Outputs	0 to 4	▶ Select the number of outputs that actuators, such as valves or pumps, should activate.
Output label 1 … 4	Free text	You can assign a meaningful name to each output, e. g. "assembly", "cleaner 1", "cleaner 2", etc.

Programming example: regular cleaning with water and 2 cleaning agents

Limit switch	Duration [s]	Assembly CPA87x	Water	Cleaner 1	Cleaner 2
ES1 1	5	1	1	0	0
ES2 1	5	1	1	0	0
0	30	1	1	0	0
0	5	1	1	1	0
0	60	1	0	0	0
0	30	1	1	0	0
0	5	1	1	0	1
0	60	1	0	0	0
0	30	1	1	0	0
ES1 0	5	0	1	0	0
ES2 0	5	0	1	0	0
0	5	0	0	0	0

The pneumatic retractable assembly, e.g. CPA87x, is activated by compressed air via a two-way valve. As a result, the assembly assumes either the "Measure" position (sensor in medium) or the "Service" position (sensor in rinse chamber). Media such as water or cleaning agents are supplied via valves or pumps. Here there are two states: 0 (= "off" or "closed") and 1 (= "on" or "open").

The hardware required for "Chemoclean Plus", such as control valves, pumps, compressed air supply, media supply etc., must be provided by the customer.

Defining the cleaning cycle

Menu/Setup/Additional functions/Cleaning/Cleaning 1 … 4		
Function	**Options**	**Info**
Cleaning cycle	**Selection** ▪ Off ▪ Interval ▪ Weekly program **Factory setting** Weekly program	▶ Choose from a cleaning routine that is restarted at set intervals and a user-definable weekly program.
Cleaning interval **Cleaning cycle** = **Interval**	0-00:01 to 07-00:00 (D-hh:mm) **Factory setting** 1-00:00	The interval value can be between 1 minute and 7 days. Example: You have set the value "1-00:00". Each day, the cleaning cycle starts at the same time you started the first cleaning cycle.
Daily event times **Cleaning cycle** = **Weekly program**	00:00 to 23:59 (HH:MM)	1. Define up to 6 times (**Event time 1 … 6**). ↳ You can then choose from these for each day of the week. 2. Choose individually for each day of the week which of the 6 times should be used for a cleaning routine on this particular day. This allows you to create weekly programs that are perfectly adapted to suit your process.
Weekdays **Cleaning cycle** = **Weekly program**	**Selection** **Monday** … **Sunday**	

Other settings and manual cleaning

Menu/Setup/Additional functions/Cleaning/Cleaning 1 … 4		
Function	**Options**	**Info**
Start signal	**Selection** ▪ None ▪ Fieldbus signals ▪ Signals of digital or analog inputs **Factory setting** None	In addition to cyclic cleaning, you can also use an input signal to start event-controlled cleaning. ▶ Choose the trigger for such a cleaning process here. Interval and weekly programs are executed as normal, i. e. conflicts can occur. Priority is given to the cleaning program that was the first to be started.
Hold	**Selection** ▪ Off ▪ On **Factory setting** On	▶ Decide whether there should be a hold during the cleaning process. This hold affects the inputs to which this cleaning process is assigned.
▷ Start single	Action	Start an individual cleaning process with the selected parameters. If cyclical cleaning is enabled, there are times in which it is not possible to manually start the process.
▷ **Stop** or **Stop Failsafe**	Action	End the cleaning process (cyclically or manually)
▶ Outputs		Goes to the menu **Outputs** → 🖹 69
▶ Cleaning program assignment view		Shows an overview of the cleaning processes

10.6.4 Mathematical functions

In addition to "real" process values, which are provided by connected physical sensors or analog inputs, mathematical functions can be used to calculate a maximum of 6 "virtual" process values.

The "virtual" process values can be:
- Output via a current output or a fieldbus
- Used as a controlled variable
- Assigned as a measured variable to a limit switch
- Used as a measured variable to trigger cleaning
- Displayed in user-defined measuring menus

Difference

You can subtract the measured values of two sensors and use the result to detect incorrect measurements, for example.

To calculate a difference, you must use two measured values with the same engineering unit.

Menu/Setup/Additional functions/Mathematical functions/MF1 to 6/Mode = Difference		
Function	**Options**	**Info**
Calculation	**Selection** ▪ Off ▪ On **Factory setting** Off	On/off switch for the function
Y1	The options depend on the sensors connected	Select the sensors and the measured variables that should act as the minuend (**Y1**) or subtrahend (**Y2**).
Measured value		
Y2		
Measured value		
Difference value	Read only	View this value in a user-defined measuring screen or output the value via the current output.
▶ Mathematical function assignment view		Overview of the configured functions

Redundancy

Use this function to monitor two or three sensors with redundant measurements. The arithmetic average of the two closest measured values is calculated and output as the redundancy value.

Menu/Setup/Additional functions/Mathematical functions/MF1 to 6/Mode = Redundancy		
Function	**Options**	**Info**
Calculation	**Selection** ▪ Off ▪ On **Factory setting** Off	On/off switch for the function
Y1	The options depend on the sensors connected	You can select a maximum of 3 different types of sensor that output the same measured value. **Example for temperature redundancy** You have a pH sensor and an oxygen sensor at inputs 1 and 2. Select the pH sensor as **Y1** and the oxygen sensor as **Y2** . **Measured value**: In each case **Temperature** select .
Measured value		
Y2		
Measured value		
Y3 (optional)		
Measured value		

Menu/Setup/Additional functions/Mathematical functions/MF1 to 6/Mode = Redundancy		
Function	**Options**	**Info**
Deviation control	**Selection** ▪ Off ▪ On **Factory setting** Off	You can monitor the redundancy. Specify an absolute limit value that must not be exceeded.
Deviation limit	Depends on the selected measured value	
Redundancy	Read only	View this value in a user-defined measuring screen or output the value via the current output.
▶ Mathematical function assignment view		Overview of the configured functions

rH value

To calculate the rH value, a pH sensor and an ORP sensor must be connected. It is irrelevant whether you are using a pH glass sensor, an ISFET sensor or the pH electrode of an ISE sensor.

Instead of the mathematical functions, you can also connect a combined pH/ORP sensor.

▶ Set the main measured value simply to rH (**Setup**/).

Menu/Setup/Additional functions/Mathematical functions/MF1 to 6/Mode = rH calculation		
Function	**Options**	**Info**
Calculation	**Selection** ▪ Off ▪ On **Factory setting** Off	On/off switch for the function
pH source	Connected pH sensor	Set the input for the pH sensor and the input for the ORP sensor. Measured value interrogation is obsolete as you must select pH or ORP mV.
ORP source	Connected ORP sensor	
Calculated rH	Read only	View this value in a user-defined measuring screen or output the value via the current output.
▶ Mathematical function assignment view		Overview of the configured functions

Degassed conductivity

Carbon dioxide from the air can be a contributing factor to the conductivity of a medium. The degassed conductivity is the conductivity of the medium excluding the conductivity caused by carbon dioxide.

Advantages of using degassed conductivity taking the example of a power station:
- The conductivity caused by corrosion products or contamination in the feed water is determined as soon as the turbines are started. The system excludes the initially high conductivity values resulting from the ingress of air.
- If carbon dioxide is regarded as non-corrosive, the live steam can be directed to the turbine far earlier during startup.
- If the conductivity value increases during normal operation, it is possible to immediately determine an ingress of coolant or air by calculating the degassed conductivity.

Menu/Setup/Additional functions/Mathematical functions/MF1 to 6/Mode = Degassed conductivity		
Function	**Options**	**Info**
Calculation	**Selection** ▪ Off ▪ On **Factory setting** Off	On/off switch for the function
Cation conductivity	Connected conductivity sensor	**Cation conductivity** is the sensor downstream from the cation exchanger and upstream from the "degassing module", **Degassed conductivity** is the sensor at the outlet of the degassing module. Measured value interrogation is obsolete as you can only choose conductivity.
Degassed conductivity	Connected conductivity sensor	
CO2 concentration	Read only	View this value in a user-defined measuring screen or output the value via the current output.
▶ Mathematical function assignment view		Overview of the configured functions

Dual conductivity

You can subtract two conductivity values and use the result to monitor the efficiency of an ion exchanger, for example.

Menu/Setup/Additional functions/Mathematical functions/MF1 to 6/Mode = Dual conductivity		
Function	**Options**	**Info**
Calculation	**Selection** ▪ Off ▪ On **Factory setting** Off	On/off switch for the function
Inlet	The options depend on the sensors connected	Select the sensors that should act as the minuend (**Inlet**, e. g. sensor upstream from ion exchanger) or subtrahend (**Outlet**, e. g. sensor downstream from ion exchanger).
Measured value		
Outlet		
Measured value		
Main value format	**Selection** ▪ Auto ▪ # ▪ #.# ▪ #.## ▪ #.### **Factory setting** Auto	Specify the number of decimal places.
Cond. unit	**Selection** ▪ Auto ▪ µS/cm ▪ mS/cm ▪ S/cm ▪ µS/m ▪ mS/m ▪ S/m **Factory setting** Auto	
Dual conductivity	Read only	View this value in a user-defined measuring screen or output the value via the current output.
▶ Mathematical function assignment view		Overview of the configured functions

Calculated pH value

The pH value can be calculated from the measured values of two conductivity sensors under certain conditions. Areas of application include power stations, steam generators and boiler feedwater.

Menu/Setup/Additional functions/Mathematical functions/MF1 to 6/Mode = pH calculation from conductivity		
Function	**Options**	**Info**
Calculation	**Selection** ▪ Off ▪ On **Factory setting** Off	On/off switch for the function
Method	**Selection** ▪ NaOH ▪ NH3 ▪ LiOH **Factory setting** NaOH	The calculation is performed on the basis of Guideline VGB-R-450L of the Technical Association of Large Power Plant Operators (Verband der Großkesselbetreiber, (VGB)). **NaOH** $pH = 11 + \log \{(\kappa_v - 1/3\ \kappa_h)/273\}$ **NH3** $pH = 11 + \log \{(\kappa_v - 1/3\ \kappa_h)/243\}$ **LiOH** $pH = 11 + \log \{(\kappa_v - 1/3\ \kappa_h)/228\}$ κ_v ... **Inlet** ... direct conductivity κ_h ... **Outlet** ... acid conductivity
Inlet Measured value Outlet Measured value	The options depend on the sensors connected	**Inlet** Sensor upstream from the cation exchanger, "direct conductivity" **Outlet** Sensor downstream from the cation exchanger, "acid conductivity" The choice of measured value is obsolete since it must always be **Conductivity** .
Calculated pH	Read only	View this value in a user-defined measuring screen or output the value via the current output.
▶ Mathematical function assignment view		Overview of the configured functions

Cation exchanger capacity (optional, with activation code)

Cation exchangers are used to monitor the water/steam circuit for inorganic contamination. The cation exchangers eliminate the disruptive influence of alkalizing agents, such as ammonium hydroxide or caustic soda, which are added to the boiler feedwater.

The service life of cation exchangers depends on:
- The type of alkalizing agent
- The concentration of the alkalizing agent
- The amount of contamination in the medium
- The capacity of the cation exchanger (efficiency of the resin)

To ensure the smooth operation of power stations, it is important to continuously monitor the exchange column load. When a user-defined remaining capacity is reached, the transmitter displays a diagnostic message so that the ion exchange column can be replaced or regenerated in good time.

The calculation of the remaining capacity depends on the following factors:
- Flow rate
- Volume of the exchanger
- Salinity of the water at the exchanger inlet
- Total volume capacity of the resin
- Degree of efficiency of the exchanger

Menu/Setup/Additional functions/Mathematical functions/MF1 to 6/Mode = Cation exchanger capacity		
Function	**Options**	**Info**
Cond IEX output	Read only	
Cond IEX input		
Flow rate		
Remaining capacity		
Remaining op. hours		
Time until %0B [1)]		
▶ Configuration		
Calculation	**Selection** ▪ Off ▪ On **Factory setting** Off	On/off switch for the function
Unit of volume	**Selection** ▪ l ▪ gal **Factory setting** l	
Exchanger volume	0.0 to 99999 **Factory setting** 0.0	Volume of the cation exchanger Unit depending on the option selected in **Unit of volume**
TVC Resin	0.0 to 99999 **eq/l** or **eq/gal** **Factory setting** 0.0 **eq/l**	TVC = total volume capacity Unit as equivalent per **Unit of volume**
Resin efficiency	1.0 to 100.0 % **Factory setting** 100.0 %	For information on the resin efficiency, refer to the data provided by the manufacturer of the resin used.
Set remaining capacity	**Selection** ▪ Yes ▪ No **Factory setting** No	Before you start monitoring, specify the remaining capacity of the exchanger resin. This value makes allowances for the re-use of resin that has already been used. If a value is not entered manually, 100 % is taken as the initial value for calculating the current remaining capacity.
Remaining capacity **Set remaining capacity** = **Yes**	0.0 to 100.0 % **Factory setting** 0.0 %	
Warning limit	1.0 to 100.0 % **Factory setting** 20.0 %	Specify the remaining capacity at which the transmitter should display a diagnostic message.

Menu/Setup/Additional functions/Mathematical functions/MF1 to 6/Mode = Cation exchanger capacity		
Function	**Options**	**Info**
Cond IEX input	Connected conductivity sensor	Select the conductivity sensor upstream from the inlet of the exchanger column.
Cond IEX output	Connected conductivity sensor	Select the conductivity sensor downstream from the outlet of the exchanger column.
Max cond at IEX output	0.0 to 99999 µS/cm **Factory setting** 0.0 µS/cm	Here, enter the maximum value that the acid conductivity may have at the outlet of the cation exchanger. The transmitter displays a diagnostic message if this value is exceeded.
Flow rate type	**Selection** ▪ Source value ▪ Fixed value **Factory setting** Source value	**Source value** You have connected the measured value of a flowmeter via a current input or a binary input. **Fixed value** Manual entry of a fixed flow rate
Flow rate	**Selection** ▪ None ▪ Current inputs ▪ Binary inputs **Factory setting** None	Specify the input at which you have connected and configured the measured value of a flowmeter (**Menu**/**Setup**/**Inputs**).
Fixed value **Flow rate type** = **Fixed value**	Free text	Specify the fixed flow value which you have read on an external flowmeter, for example.
Min flow rate	0.0 to 99999 l/h **Factory setting** 0.0 l/h	
Max flow rate		
▶ Mathematical function assignment view		Overview of the configured functions

1) %0B is a variable whose value depends on the configuration. The configured value is displayed, e.g. 20%.

Formula (optional, with activation code)

With the formula editor, it is possible to calculate a new value from a maximum of 3 measured values. A wide range of mathematical and logical (Boolean) operations are available for this purpose.

The Liquiline firmware offers you a powerful mathematics tool with the formula editor. You are responsible for the feasibility of your formula, and therefore for the feasibility of the result.

Symbol	Operation	Type of operands	Type of result	Example
+	Addition	Numerical	Numerical	A+2
-	Subtraction	Numerical	Numerical	100-B
*	Multiplication	Numerical	Numerical	A*C
/	Division	Numerical	Numerical	B/100
^	Power	Numerical	Numerical	A^5
²	Square	Numerical	Numerical	A^2
³	Cube	Numerical	Numerical	B^3
SIN	Sine	Numerical	Numerical	SIN(A)
COS	Cosine	Numerical	Numerical	COS(B)
EXP	Exponential function e^x	Numerical	Numerical	EXP(A)
LN	Natural logarithm	Numerical	Numerical	LN(B)

Symbol	Operation	Type of operands	Type of result	Example
LOG	Decadic logarithm	Numerical	Numerical	LOG(A)
MAX	Maximum of two values	Numerical	Numerical	MAX(A,B)
MIN	Minimum of two values	Numerical	Numerical	MIN(20,B)
ABS	Absolute value	Numerical	Numerical	ABS(C)
NUM	Boolean → numerical conversion	Boolean	Numerical	NUM(A)
=	Equals	Boolean	Boolean	A=B
<>	Not equal to	Boolean	Boolean	A<>B
>	Greater than	Numerical	Boolean	B>5.6
<	Less than	Numerical	Boolean	A<C
OR	Disjunction	Boolean	Boolean	B OR C
AND	Conjunction	Boolean	Boolean	A AND B
XOR	Exclusive disjunction	Boolean	Boolean	B XOR C
NOT	Negation	Boolean	Boolean	NOT A

Menu/Setup/Additional functions/Mathematical functions/MF1 to 6/Mode = Formula		
Function	**Options**	**Info**
Calculation	**Selection** ▪ Off ▪ On **Factory setting** Off	On/off switch for the function
Source A … C	**Selection** Select source **Factory setting** None	You can use all the sensor inputs, binary and analog inputs, mathematical functions, limit switches, fieldbus signals, controllers and data records for measuring range switching as the source for measured values. 1. Choose a maximum of three sources (A, B and C) for measured values. 2. For each source, choose the measured value to be calculated. ↳ All available signals - depending on the selected source - are possible measured values. 3. Enter the formula. 4. Switch on the calculation. ↳ The current measured values A, B and C as well as the result of the calculation using the formula are displayed.
Measured value	**Selection** Depends on the source	
A … C	The current measured value is displayed	
Formula	Free text	Table → 🖹 103 Make sure the exact notation is used (upper case). Blank spaces before and after mathematical characters are irrelevant. Note the operator precedence, i.e. multiplication and division take precedence over addition and subtraction. Use parentheses if necessary.

Menu/Setup/Additional functions/Mathematical functions/MF1 to 6/Mode = Formula		
Function	**Options**	**Info**
Result unit	Free text	You may enter a unit for the calculated value if desired.
Result format	**Selection** ▪ # ▪ #.# ▪ #.## ▪ #.### ▪ #.#### **Factory setting** #.##	Select the number of decimal places.
Result numeric	Read only	Current, calculated value
▶ Mathematical function assignment view		Overview of the configured functions

Example: 2-point chlorine regulator with volume flow monitoring

A relay output activates a dosing pump. The pump should switch on when the following 3 conditions are met:
- (1) There is flow
- (2) The volume flow is above a defined value
- (3) The concentration of chlorine drops below a defined value

1. Connect a binary input signal from an "INS" point level switch of the CCA250 assembly to the DIO module.
2. Connect an analog input signal of a volume flow meter to the AI module.
3. Connect the chlorine sensor.
4. Configure the mathematical function **Formula** : **Source A** = DIO binary input, **Source B** = AI current input, **Source C** = input **Disinfection**.
   ↳ Formula:
   A AND (B > 3) AND (C < 0.9)
   (where 3 is the lower limit value of the volume flow and 0.9 is the lower limit value of the chlorine concentration)
5. Configure the relay output with the mathematical function **Formula** and connect the dosing pump to the corresponding relay.

The pump is switched on if all 3 conditions are met. If one of the conditions is no longer met, the pump is switched off again.

ⓘ Instead of outputting the result of the formula directly to a relay, you can also connect a limit switch in between in order to attenuate the output signal via a switch-on and switch-off delay.

Example: Load-based control

The load - i.e. the product of the concentration and volume flow - is needed for the dosage of precipitants, for instance.

1. Connect the input signal of a phosphate analyzer to the AI module.
2. Connect an analog input signal of a volume flow meter to the AI module.
3. Configure the mathematical function **Formula** : **Source A** = phosphate input signal and **Source B** = volume flow input signal.
   ↳ Formula:
   A*B*x
   (where x is an application-specific proportionality factor)
4. Select this formula as the source e.g. of the current output or of a modulated binary output.

5. Connect the valve or pump.

10.6.5 Measuring range switching

A measuring range switching (MRS) configuration includes the following options for each of the four binary input states:
- Operating mode (conductivity or concentration)
- Concentration table
- Temperature compensation
- Current output turndown
- Limit switch range

An MRS set is assigned to a channel and switched on. The measuring range configuration selected via the binary inputs is now applied instead of the normal configuration of the linked sensor channel. For current outputs and limit switches to be controlled by the MRS, they must be linked to the MRS set, not to the measuring channel.
Current outputs and limit switches can be linked to an MRS set. This MRS set gives you the measured value and the associated turn down (current outputs) or the range for limit value monitoring (limit switches).
A limit switch connected to an MRS set always uses the **Out of range check**mode. Consequently, it switches when the value is outside the configured range.
If a current output or limit switch is connected to an MRS set, the turndown, monitoring range and limit switch mode can no longer be configured manually. Therefore, these options are hidden in the menus (current outputs and limit switch).

Programming example: CIP cleaning in a brewery

	Beer	**Water**	**Alkali**	**Acid**
Binary input 1	0	0	1	1
Binary input 1	0	1	0	1
	Measuring range 00	Measuring range 01	Measuring range 10	Measuring range 11
Operating mode	Conductivity	Conductivity	Concentration	Concentration
Conc. Table	-	-	NaOH 0..15%	User table 1
Compensation	User table 1	Linear	-	-
Current output				
Range lower value	1.00 mS/cm	0.1 mS/cm	0.50 %	0.50 %
Range upper value	3.00 mS/cm	0.8 mS/cm	5.00 %	1.50 %
Limit switches				
Range lower value	2.3 mS/cm	0.5 mS/cm	2.00 %	1.30 %
Range upper value	2.5 mS/cm	0.7 mS/cm	2.10 %	1.40 %

Menu/Setup/Additional functions/Measuring range switch		
Function	**Options**	**Info**
▶ MRS set 1 … 2		If you enter both activation codes, you have two independent parameter sets available for measuring range switching. The submenus are the same for both sets.
MRS	**Selection** ▪ Off ▪ On **Factory setting** Off	Switches the function on or off
Sensor	**Selection** ▪ None ▪ Connected conductivity sensors **Factory setting** None	This function can be used on conductivity sensors only.
Binary input 1 … 2	**Selection** ▪ None ▪ Binary inputs ▪ Fieldbus signals ▪ Limit switches **Factory setting** None	Source of the switching signal, can be selected for input 1 and 2 in each case
▶ Measuring range 00 … 11		Select the MRSs; a maximum of 4 are possible. The submenus are identical for each and thus are displayed only once.
Operating mode	**Selection** ▪ Conductivity ▪ Concentration ▪ TDS ▪ Resistance **Factory setting** Conductivity	Selection depends on the sensor used: ▪ Inductive sensor and conductive four-pin sensor – Conductivity – Concentration – TDS ▪ Conductive sensor – Conductivity – Resistance – TDS
Conc. Table **Operating mode** = **Concentration**	**Selection** ▪ NaOH 0..15% ▪ NaOH 25..50% ▪ HCl 0..20% ▪ HNO3 0..25% ▪ HNO3 24..30% ▪ H2SO4 0..28% ▪ H2SO4 93..100% ▪ H3PO4 0..40% ▪ NaCl 0..26% ▪ User table 1 … 4 **Factory setting** NaOH 0..15%	Concentration tables saved at the factory: ▪ NaOH: 0 to 15%, 0 to 100 °C (32 to 212 °F) ▪ NaOH: 25 to 50%, 2 to 80 °C (36 to 176 °F) ▪ HCl: 0 to 20%, 0 to 65 °C (32 to 149 °F) ▪ HNO3: 0 to 25%, 2 to 80 °C (36 to 176 °F) ▪ H2SO4: 0 to 28%, 0 to 100 °C (32 to 212 °F) ▪ H2SO4: 40 to 80%, 0 to 100 °C (32 to 212 °F) ▪ H2SO4: 93 to 100%, 0 to 100 °C (32 to 212 °F) ▪ H3PO4: 0 to 40%, 2 to 80 °C (36 to 176 °F) ▪ NaCl: 0 to 26%, 2 to 80 °C (36 to 176 °F)
Compensation **Operating mode** = **Conductivity**	**Selection** ▪ None ▪ Linear ▪ NaCl (IEC 746-3) ▪ Water ISO7888 (20°C) ▪ Water ISO7888 (25°C) ▪ UPW NaCl ▪ UPW HCl ▪ User table 1 … 4 **Factory setting** Linear	Various methods are available to compensate for the temperature dependency. Depending on your process, decide which type of compensation you want to use. Alternatively, you can also select **None** and thus measure uncompensated conductivity.

Menu/Setup/Additional functions/Measuring range switch		
Function	**Options**	**Info**
▶ Current output		
Range lower unit	Depends on the **Operating mode**	Units are only queried for **Operating mode** = **Conductivity** . The other units are pre-defined and cannot be modified. ▪ Conductivity **S/m**, **mS/cm**, **µS/cm**, **S/cm**, **µS/m**, **mS/m** ▪ Concentration % ▪ TDS ppm ▪ Resistance Ωcm
Range lower value		
Range upper unit		
Range upper value		
▶ Limit switches		
Range lower unit	Depends on the **Operating mode**	Units are only queried for **Operating mode** = **Conductivity** . The other units are pre-defined and cannot be modified. ▪ Conductivity **S/m**, **mS/cm**, **µS/cm**, **S/cm**, **µS/m**, **mS/m** ▪ Concentration % ▪ TDS ppm ▪ Resistance Ωcm
Range lower value		
Range upper unit		
Range upper value		

10.6.6 Diagnostic modules

Here you can configure a maximum of 8 individual diagnostic messages.

A diagnostic module has the following properties:
- The feed source can be configured like a binary output (relay, digital output).
- You can choose whether the diagnostic message should be output at a high level or low level.
- You decide which error category (Namur class) should be assigned to the message.
- You can define a customized text to be output as the diagnostic message text.

In addition you can switch off the factory diagnostic code for limit switches. This allows you to:
- Use the limit switch on a purely functional basis (without a message)
- Configure application-specific message texts
- Control diagnostic modules directly by a digital signal or via a limit switch output (enables the use of switch-on/switch-off delay, for example).

Menu/Setup/Additional functions/Diagnostic modules		
Function	**Options**	**Info**
▶ Diagnostic module 1 (961) … 8 (968)		
Source of data	**Selection** ▪ None ▪ Fieldbus signals ▪ Binary inputs ▪ Limit switches **Factory setting** None	Specify the input which should be the source of data for the diagnostic message.
Measured value	**Selection** depend on **Source of data** **Factory setting** None	Specify the measured value that should trigger the diagnostic message. You can use different measured values depending on the data source. → 🖹 82

Menu/Setup/Additional functions/Diagnostic modules		
Function	**Options**	**Info**
Active low	**Selection** ▪ Off ▪ On **Factory setting** On	**On**: The output value is equal to the inverse output value.
Short text	Free text	Give the diagnostic message a name.
▶ Diagnostic module assignment view		Shows an overview of the diagnostic modules used.

11 Calibration

- Sensors with Memosens protocol are calibrated at the factory.
- Users must decide whether the process conditions present require calibration during initial commissioning.
- Additional calibration is not required in many standard applications.
- Calibrate the sensors at sensible intervals depending on the process.

Operating Instructions "Memosens", BA01245C

12 Diagnostics and troubleshooting

12.1 General troubleshooting

The analyzer transmitter continuously monitors its functions itself.

If a diagnostic message occurs, the display alternates between the diagnostic message and the measured value in the measuring mode.

The color of the display background changes to red if a diagnostic message for error category "F" occurs.

12.1.1 Troubleshooting

A diagnostic message appears on the display or via the fieldbus , measured values are not plausible, or you identify a fault.

1. See the Diagnostics menu for details on the diagnostic message.
   ↳ Follow the instructions to rectify the problem.
2. If this does not help, search for the diagnostic message under "Overview of diagnostic information"(→ 🖹 114) in these Operating Instructions. Use the message number as a search criterion. Ignore the letters indicating the Namur error category.
   ↳ Follow the troubleshooting instructions provided in the last column of the error tables.
3. If the measured values are implausible, the local display is faulty or you encounter other problems, search for the faults under "Process errors without messages" (→ Operating Instructions Memosens, BA01245C) or "Device-specific errors" (→ 🖹 111).
   ↳ Follow the recommended measures.
4. Contact the Service Department if you cannot rectify the error yourself, citing only the error number.

12.1.2 Process errors without messages

📖 Operating Instructions "Memosens", BA01245C

12.1.3 Device-specific errors

Problem	Possible cause	Tests and/or remedial measures
Dark display	No supply voltage	Check if supply voltage applied.
	Base module defective	Replace base module
Values appear on display but: ▪ Display does not change and / or ▪ Device cannot be operated	Module not wired correctly	Check modules and wiring.
	Impermissible operating system condition	Switch off device and switch it on again.
Implausible measured values	Inputs defective	First perform tests and take measures as outlined in "Process-specific errors" section Measuring input test: ▸ Connect the emocheck Sim CYP03D to the input and use it to check the function of the input.

Problem	Possible cause	Tests and/or remedial measures
Current output, incorrect current value	Incorrect adjustment	▶ Check with integrated current simulation, connect mA meter directly to current output.
	Load too large	
	Shunt / short to ground in current loop	
No current output signal	Base module defective	▶ Check with integrated current simulation, connect mA meter directly to current output.

12.2 Diagnostic information on the local display

Up-to-date diagnostic events are displayed along with their status category, diagnostic code and short text. Clicking on the navigator lets you retrieve more information and tips on remedial measures.

12.3 Diagnostic information via web browser

The same information as for the local display is available via the web server.

12.4 Diagnostic information via fieldbus

Diagnostic events, status signals and more information are transmitted according to the definitions and technical capability of the respective fieldbus systems.

12.5 Adapting the diagnostic information

12.5.1 Classification of diagnostic messages

In the **DIAG/Diagnostics list** menu you can find more detailed information on the current diagnostic messages displayed.

In accordance with Namur specification NE 107, the diagnostic messages are characterized by:

- Message number
- Error category (letter in front of the message number)
  - **F** = (Failure) a malfunction has been detected
    The measured value of the affected channel is no longer reliable. The cause of the malfunction is to be found in the measuring point. Any control system connected should be set to manual mode.
  - **C** = (Function check), (no error)
    Maintenance work is being performed on the device. Wait until the work has been completed.
  - **S** = (Out of specification), the measuring point is being operated outside its specification
    Operation is still possible. However, you run the risk of increased wear, shorter operating life or lower measurement accuracy. The cause of the problem is to be found outside the measuring point.
  - **M** = (Maintenance required), action should be taken as soon as possible
    The device still measures correctly. Immediate measures are not necessary. However, proper maintenance efforts would prevent a possible malfunction in the future.
- Message text

If you contact the Service Department, please cite the message number only. Since you can individually change the assignment of an error to an error category, the Service Department cannot use this information.

12.5.2 Adapting the diagnostic behavior

All the diagnostic messages are assigned to specific error categories at the factory. Since other settings might be preferred depending on the application, error categories and the effect errors have on the measuring point can be configured individually. Furthermore, every diagnostic message can be disabled.

Example

Diagnostic message 531 **Logbook full**appears on the display. You want to change this message so that an error is not shown on the display for example.

1. **Menu/Setup/General settings/Extended setup/Diagnostics settings/Diag. behavior** .
2. Select the diagnostics message and press the navigator button.
3. Decide: (a) Should the message be deactivated? (**Diagnostics message** = **Off**)
   (b) Do you want to change the error category?(**Status signal**)
   (c) Should an error current be output? (**Error current** = **On**)
   (d) Do you want to trigger a cleaning program? (**Cleaning program**)
4. Example: You deactivate the message.
   ↳ The message is no longer displayed. In the **DIAG** menu, the message appears as **Past message**.

Possible settings

The list of diagnostic messages displayed depends on the path selected. There are device-specific messages, and messages that depend on what sensor is connected.

Menu/Setup/Run the ../Extended setup/Diagnostics settings/Diag. behavior		
Function	**Options**	**Info**
List of diagnostic messages		▶ Select the message to be changed. Only then can you make the settings for this message.
Diag. code	Read only	
Diagnostic message	**Selection** ▪ Off ▪ On **Factory setting** Depends on the Diag. code	You can deactivate or reactivate a diagnostic message here. Deactivating means: ▪ No error message in the measuring mode ▪ No error current at the current output
Error current	**Selection** ▪ Off ▪ On **Factory setting** Depends on the Diag. code	Decide whether an error current should be output at the current output if the diagnostic message display is activated. In the event of general device errors, the error current is switched to all the current outputs. In the event of channel-specific errors, the error current is only switched to the current output in question.
Status signal	**Selection** ▪ Maintenance (M) ▪ Out of specification (S) ▪ Function check (C) ▪ Failure (F) **Factory setting** Depends on the Diag. code	The messages are divided into different error categories in accordance with NAMUR NE 107. Decide whether you want to change a status signal assignment for your application.

Menu/Setup/Run the ../Extended setup/Diagnostics settings/Diag. behavior		
Function	**Options**	**Info**
Diag. output	**Selection** ▪ None ▪ Binary outputs ▪ Alarm relay ▪ Relay **Factory setting** None	You can use this function to select an output to which the diagnostic message should be assigned. An alarm relay is always available, regardless of the device version. Other relays are optional. Before you can assign the message to an output: Configure one of the output types mentioned as follows: **Menu**/**Setup**/**Outputs**/(**Alarm relay** or **Binary output** or **relay**)/**Function** = **Diagnostics** and **Operating mode** = **as assigned**.
Cleaning program	**Selection** ▪ None ▪ Cleaning 1 ... 4 **Factory setting** None	Decide whether the diagnostic message should trigger a cleaning program. You can define cleaning programs under: **Menu**/**Setup**/**Additional functions**/**Cleaning**.
▶ Detail information	Read only	Here you can find more information on the diagnostic message and instructions on how to resolve the problem.

12.6 Overview of diagnostic information

12.6.1 Device-specific, general diagnostic messages

No.	Message	Factory settings			Tests or remedial action
		S [1]	D [2]	F [3]	
202	Selftest active	F	On	Off	Wait for self-test to be finished
216	Hold active	C	On	Off	Output values and status of the channel are on hold
241	Firmware failure	F	On	On	Internal device error 1. Update the software 2. Contact the Service Department 3. Replace the backplane (Service)
242	Firmware incomp.	F	On	On	
243	Firmware failure	F	On	On	
261	Electronics module	F	On	On	Electronics module defective 1. Replace the module 2. Contact the Service Department
262	Module connection	F	On	On	Electronics module not communicating 1. Check the module , replace it if necessary 2. Contact the Service Department
263	Incomp. detected	F	On	On	Wrong kind of electronics module 1. Replace the module 2. Contact the Service Department
284	Firmware update	M	On	Off	Update completed successfully

No.	Message	Factory settings			Tests or remedial action
		S [1]	D [2]	F [3]	
285	Update error	F	On	On	Firmware update failed 1. Repeat 2. SD card error → use another card 3. Incorrect firmware → repeat with suitable firmware 4. Contact the Service Department
302	Battery low	M	On	Off	Buffer battery of real time clock is low The date and time are lost if the power is interrupted. ▶ Contact the Service Department (battery replacement)
304	Module data	F	On	On	At least 1 module has incorrect configuration data 1. Check the system information 2. Contact the Service Department
305	Power consumption	F	On	On	Total power consumption too high 1. Check installation 2. Remove sensors/modules
306	Software error	F	On	On	Internal firmware error ▶ Contact the Service Department
366	Module connection	F	On	On	No communication with the actuator module ▶ Check the internal connecting cable to the 1IF module
370	Internal voltage	F	On	On	Internal voltage outside the valid range ▶ Check supply voltage
373	Electronictemp. high	M	On	Off	High electronics temperature ▶ Check ambient temperature and energy consumption
374	Sensor check	F	On	Off	No measurement signal from sensor 1. Check sensor connection 2. Check sensor, replace if necessary
401	Factory reset	F	On	On	Factory reset is performed
403	Device verification	M	Off	Off	Device verification active, please wait
405	Service IP active	C	Off	Off	Service switch is switched on The device can be addressed at 192.168.1.212. ▶ Switch off the service switch to change to the saved IP settings
406	Param. active	C	Off	Off	▶ Wait for configuration to be finished
407	Diag. setup active	C	Off	Off	▶ Wait for maintenance to be finished
412	Writing backup	F	On	Off	▶ Wait for the write process to be finished
413	Reading backup	F	On	Off	▶ Wait
460	Output below limit	S	On	Off	Reasons ▪ Sensor in air ▪ Air pockets in assembly ▪ Sensor fouled ▪ Incorrect flow to sensor 1. Check sensor installation 2. Clean sensor 3. Adjust assignment of current outputs
461	Output above limit	S	On	Off	

No.	Message	Factory settings			Tests or remedial action
		S [1]	D [2]	F [3]	
502	No text catalog	F	On	On	▶ Contact the Service Department
503	Language change	M	On	Off	Language change failed ▶ Contact the Service Department
529	Diag. setup active	C	Off	Off	▶ Wait for maintenance to be finished.
530	Logbook at 80%	M	On	Off	1. Save the logbook to the SD card and then delete the logbook in the device 2. Set memory to ring memory 3. Deactivate logbook
531	Logbook full	M	On	Off	
532	License error	M	On	Off	▶ Contact the Service Department
540	Parameter save fail	M	On	Off	Storage of configuration has failed ▶ Repeat
541	Parameter load ok	M	On	Off	Configuration successfully loaded
542	Parameter load fail	M	On	Off	Loading of configuration has failed ▶ Repeat
543	Parameter load abort	M	On	Off	Configuration loading aborted
544	Parameter reset ok	M	On	Off	Factory default successful
545	Parameter reset fail	M	On	Off	Setting of device configuration to factory setting has failed
906	Cat.exchanger failure	F	On	Off	Invalid values for conductivity or flow 1. Check for valid measured values in the menu of the mathematical function. 2. Check sensors. 3. Check minimum flow.
907	Cat.exchanger warning	S	On	Off	Limit values exceeded for conductivity or flow. Possible reasons: ▪ Resin depleted ▪ Blocked pipe ▶ Check application.
908	IEX capacity low	M	On	Off	The capacity of the exchange resin will soon be exhausted. ▶ Schedule resin regeneration or replacement.
909	IEX capacity exhausted	F	On	Off	The capacity of the exchange resin is exhausted. ▶ Regenerate or replace the resin.
910	Limit switch	S	On	Off	Limit switch activated
937	Controlled variable	S	On	Off	Controller input warning Status of the controller variable is not OK ▶ Check application
938	Controller setpoint	S	On	Off	Controller input warning Status of set point is not OK ▶ Check application
939	Control. disturbance	S	On	Off	Controller input warning Status of disturbance variable is not OK ▶ Check application
951 - 958	Hold active CH1 ..	C	On	Off	Output values and status of the channels are on hold. ▶ Wait until the hold is deactivated again.

No.	Message	Factory settings			Tests or remedial action
		S [1]	D [2]	F [3]	
961 - 968	Diagnostic module 1 (961) ... Diagnostic module 8 (968)	S	Off	Off	Diagnostic module is enabled
969	Modbus Watchdog	S	Off	Off	The device did not receive a Modbus telegram from the master within the specified time. The status of Modbus process values received is set to invalid
970	Curr. input overload	S	On	On	Current input overloaded The current input is switched off from 23 mA due to overload and reactivated automatically when a normal load is present.
971	Current Input low	S	On	On	Current input too low At 4 to 20 mA, the input current is less than the lower failure current. ▶ Check the input for short-circuiting
972	Curr. input > 20 mA	S	On	On	Current output range exceeded
973	Current Input < 4 mA	S	On	On	Current output range undershot
974	Diagnostics confirm.	C	Off	Off	User has acknowledged the message displayed in the measuring menu.
975	Device restart	C	Off	Off	Device reset
976	PFM value high	S	On	Off	Pulse frequency modulation: output signal exceeded/undershot. Measured value outside the specified range. ▪ Sensor in air ▪ Air pockets in assembly ▪ Incorrect flow to sensor ▪ Sensor fouled 1. Clean sensor 2. Check plausibility 3. Adjust the PFM configuration
977	PFM value low	S	On	Off	
978	ChemoClean Failsafe	S	On	On	No feedback signal detected within the configured period. 1. Check the application 2. Check the wiring 3. Extend the duration
990	Deviation limit	F	On	On	Redundancy: limit value of percentage deviation exceeded
991	CO2 conc. range	F	On	On	CO_2 concentration (degassed conductivity) outside the measuring range
992	pH calculation range	F	On	On	pH calculation outside the measuring range
993	rH calculation range	F	On	On	rH calculation outside the measuring range
994	Difference conduct.	F	On	On	Dual conductivity outside the measuring range
995	Mathematical error	S	On	On	Incorrect calculation result 1. Check the mathematical functions. 2. Check the input variables.

1) **Status signal**
2) **Diagnostic message**
3) **Error current**

12.6.2 Sensor-specific diagnostic messages

Operating Instructions "Memosens", BA01245C

12.7 Pending diagnostic messages

The Diagnostics menu contains all the information on the device status.

Furthermore, various service functions are available.

The following messages are directly displayed every time you enter the menu:
- **Most important message**
  Diagnostic message recorded with the highest criticality level
- **Past message**
  Diagnostic message whose cause is no longer present.

All the other functions in the Diagnostics menu are described in the following chapters.

12.8 Diagnostics list

All the current diagnostic messages are listed here.

A time stamp is available for each message. Furthermore, the user also sees the configuration and description of the message as saved in **Menu/Setup/General settings/ Extended setup/Diagnostics settings/Diag. behavior** .

12.9 Event logbook

12.9.1 Available logbooks

Types of logbooks
- Logbooks physically available (all apart from the overall logbook)
- Database view of all logbooks (=overall logbook)

Logbook	Visible in	Max. entries	Can be disabled [1])	Logbook can be deleted	Entries can be deleted	Can be exported
Overall logbook	All events	20000	Yes	No	Yes	No
Calibration logbook	Calibration events	75	(Yes)	No	Yes	Yes
Operation logbook	Configuration events	250	(Yes)	No	Yes	Yes
Diagnostics logbook	Diagnostic events	250	(Yes)	No	Yes	Yes
Version logbook	All events	50	No	No	No	Yes
Hardware version logbook	All events	125	No	No	No	Yes
Data logbook for sensors (optional)	Data logbooks	150 000	Yes	Yes	Yes	Yes
Debugging logbook	Debug events (only accessible by entering the special service activation code)	1000	Yes	No	Yes	Yes

1) Data in brackets means this depends on the overall logbook

12.9.2 Menu Logbooks

DIAG/Logbooks		
Function	**Options**	**Info**
▶ All events		Chronological list of all the logbook entries, with information on the type of event
▶ Show	Events are displayed	Select a particular event to display more detailed information.
▶ Go to date	**User entry** ▪ Go to date ▪ Time	Use this function to go directly to a specific time in the list. In this way, you avoid having to scroll through all the information. The complete list is always visible, however.
▶ Calibration events		Chronological list of the calibration events
▶ Show	Events are displayed	Select a particular event to display more detailed information.
▶ Go to date	**User entry** ▪ Go to date ▪ Time	Use this function to go directly to a specific time in the list. In this way, you avoid having to scroll through all the information. The complete list is always visible, however.
▷ Delete all entries	Action	You can delete all the calibration logbook entries here.
▶ Configuration events		Chronological list of the configuration events
▶ Show	Events are displayed	Select a particular event to display more detailed information.
▶ Go to date	**User entry** ▪ Go to date ▪ Time	Use this function to go directly to a specific time in the list. In this way, you avoid having to scroll through all the information. The complete list is always visible, however.
▷ Delete all entries	Action	You can use this to delete all the operation logbook entries.
▶ Diagnostic events		Chronological list of the diagnostics events
▶ Show	Events are displayed	Select a particular event to display more detailed information.
▶ Go to date	**User entry** ▪ Go to date ▪ Time	Use this function to go directly to a specific time in the list. In this way, you avoid having to scroll through all the information. The complete list is always visible, however.
▷ Delete all entries	Action	You can use this to delete all the diagnostics logbook entries.

You can view your data logbook entries graphically on the display (**Show plot**).

You can also adapt the display to suit your individual requirements:
- Press the navigator button in the graphic display: you are given additional options such as the zoom function and x/y movement of the graph.
- Define the cursor: if you select this option, you can move along the graph with the navigator and view the logbook entry (data stamp/measured value) in text form for every point in the graph.
- Simultaneous display of two logbooks: **Select 2nd plot** and **Show plot**
  - A small cross marks the currently selected graph for which the zoom can be changed or a cursor used, for example.
  - In the context menu (press the navigator button), you can select the other graph. You can then apply the zoom function, a movement or a cursor to this graph.
  - Using the context menu, you can also select both graphs simultaneously. This enables you to use the zoom function on both graphs simultaneously, for example .

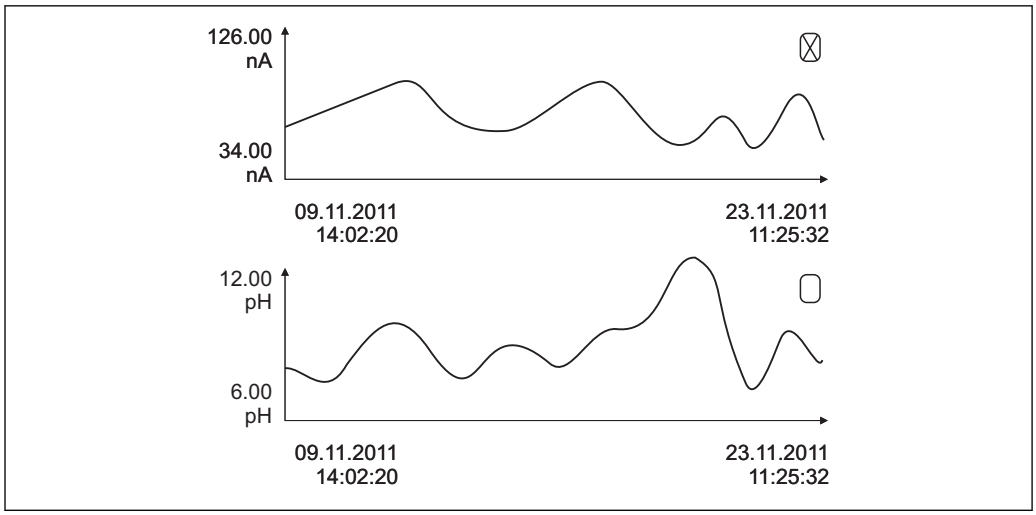

88 Simultaneous display of two graphs, the top one is "selected"

DIAG/Logbooks		
Function	**Options**	**Info**
▶ Data logbooks		Chronological list of the data logbook entries for sensors
Data logbook 1 ... 8 <Logbook name>		This submenu is available for each data logbook that you have set up and activated.
Source of data	Read only	Input or mathematical function is displayed
Measured value	Read only	Measured value being recorded is displayed
Log time left	Read only	Display of days, hours and minutes until logbook is full. ▶ Pay attention to the information on selecting the memory type in the **General settings/Logbooks**menu.
▶ Show	Events are displayed	Select a particular event to display more detailed information.
▶ Go to date	**User entry** ▪ Go to date ▪ Time	Use this function to go directly to a specific time in the list. In this way, you avoid having to scroll through all the information. The complete list is always visible, however.
▶ Show plot	Graphic display of the logbook entries	The entries are displayed according to your settings in the **General settings/Logbooks**.
Select 2nd plot	Select another data logbook	You can view a second logbook at the same time as the current one.
▷ Delete all entries	Action	You can use this to delete all data logbook entries.
▶ Save logbooks		
File format	**Selection** ▪ CSV ▪ FDM	▶ Save the logbook in the preferred file format. You can then open the saved CSV file on the PC in MS Excel, for example, and make further edits here. [1]. You can import the FDM files into FieldCare and archive them so that they are tamper-proof.

DIAG/Logbooks		
Function	**Options**	**Info**
▷ All data logbooks ▷ Data logbook 1 … 8 ▷ All event logbooks ▷ Calibration logbook ▷ Diagnostic logbook ▷ Configuration logbook ▷ HW version logbook ▷ Version logbook	Action, commences as soon as the option is selected	Use this function to save the logbook to an SD card. ▶ Save the logbook in the preferred file format. You can then open the saved CSV file on the PC in MS-Excel, for example, and make further edits here. You can import the FDM files into Fieldcare and archive them so they are tamper-proof.
The file name consists of **Logbook ident** (**Menu/Setup/General settings/Logbooks**), an abbreviation for the logbook and a time stamp.		

1) CSV files use international number formats and separators. Therefore they must be imported into MS Excel as external data with the correct format settings. If you double-click the file to open it, the data are only displayed correctly if MS Excel is installed with the US country setting.

12.10 Simulation

You can simulate values at inputs and outputs for testing purposes:
- Current values at current outputs
- Measured values at inputs
- Relay contact opening or closing

Only current values are simulated. Via the simulation function, it is not possible to calculate the totalized value for the flow or rainfall.

DIAG/Simulation		
Function	**Options**	**Info**
▶ Current output x:y		Simulation of an output current This menu appears once for each current output.
Simulation	**Selection** ▪ Off ▪ On **Factory setting** Off	If you simulate the value at the current output, this is indicated on the display by a simulation icon in front of the current value.
Current	2.4 to 23.0 mA **Factory setting** 4 mA	▶ Set the desired simulation value.
▶ Alarm relay ▶ Relay x:y		Simulation of a relay state This menu appears once for each relay.
Simulation	**Selection** ▪ Off ▪ On **Factory setting** Off	If you simulate the relay state, this is indicated on the display by a simulation icon in front of the relay display.
State	**Selection** ▪ Low ▪ High **Factory setting** Low	▶ Set the desired simulation value. The relay switches in accordance with your setting when you switch on the simulation. In the measured value display you see **On** (= **Low**) or **Off** (= **High**) for the simulated relay state.

DIAG/Simulation		
Function	**Options**	**Info**
▶ Meas. inputs		Simulation of a measured value (only for sensors) This menu appears once for each measuring input.
Channel : parameter		
Simulation	**Selection** ▪ Off ▪ On **Factory setting** Off	If you simulate the measured value, this is indicated on the display by a simulation icon in front of the measured value.
Main value	Depends on the sensor	▶ Set the desired simulation value.
Sim. temperature	**Selection** ▪ Off ▪ On **Factory setting** Off	If you simulate the temperature measured value, this is indicated on the display by a simulation icon in front of the temperature.
Temperature	-50.0 to +250.0 °C (-58.0 to 482.0 °F) **Factory setting** 20.0 °C (68.0 °F)	▶ Set the desired simulation value.

12.11 Device test

DIAG/Systemtest		
Function	**Options**	**Info**
▶ Power Supply	**Read only** ▪ Digital Supply 1: 1.2V ▪ Digital Supply 2: 3.3V ▪ Analog Supply: 12.5V ▪ Sensor Supply: 24V ▪ Temperature	Detailed list of power supply to instrument. The actual values can vary without a malfunction being present.
▶ Heartbeat		
▶ Perform verification		Heartbeat verification will influence the device's output signals and their statuses. Please ensure safe process control conditions. 1. Press **OK**. 2. Answer the questions and confirm at the end by pressing **OK**. ↳ The overall result of the verification is displayed.
▷ Verification results		**Result display** ▪ Customer Customized text, maximum 32 characters ▪ Location Customized text, maximum 32 characters ▪ Verification report Automatic time stamp ▪ Verification ID Automatic counter ▪ Overall result Passed or failed
▷ Export to SD-card		Export the verification report as a pdf file ▪ Detailed report on various device tests ▪ Input and output information ▪ Device information ▪ Sensor information The report is ready to be printed out and signed. You can file it immediately in an operations log, for example.

12.12 Resetting the measuring device

DIAG/Reset		
Function	**Options**	**Info**
▷ Device restart	**Selection** ▪ OK ▪ ESC	Restart and keep all the settings
▷ Factory default	**Selection** ▪ OK ▪ ESC	Restart with factory settings Settings that have not been saved are lost.

12.13 Device information

12.13.1 System information

DIAG/System information		
Function	**Options**	**Info**
Device tag	Read only	Individual device tag → **General settings**
Order code	Read only	You can order identical hardware with this code. This code changes on account of changes to the hardware and you can enter the new code you received from the manufacturer here [1].
To establish the version of your device, enter the order code into the search screen at the following address: www.endress.com/order-ident		
Orig. order code ext.	Read only	Complete order code for the original device, resulting from the product structure.
Current order code ext.	Read only	Current code, taking into account changes to the hardware. You must enter this code yourself.
Serial number	Read only	The serial number allows you to access device data and documentation on the Internet: www.endress.com/device-viewer
Software version	Read only	Current version
▶ HART *Only with the HART option*	Read only ▪ Bus address ▪ Unique address ▪ Manufacturer ID ▪ Device type ▪ Device revision ▪ Software revision	HART-specific information The unique address is linked to the serial number and is used to access devices in a Multidrop environment. Device and software version numbers are incremented as soon as changes have been made.
▶ Modbus *Only with the Modbus option*	Read only ▪ Enable ▪ Bus address ▪ Termination ▪ Modbus TCP Port 502	Modbus-specific information
▶ PROFIBUS *Only with the PROFIBUS option*	Read only ▪ Termination ▪ Bus address ▪ Ident number ▪ Baudrate ▪ DPV0 state ▪ DPV0 fault ▪ DPV0 master addr ▪ DPV0 WDT [ms]	Module status and other PROFIBUS-specific information
▶ Ethernet *Only with the Ethernet, EtherNet/IP, Modbus TCP, Modbus RS485 or PROFIBUS DP option*	Read only ▪ Enable ▪ Webserver ▪ Link settings ▪ DHCP ▪ IP-Address ▪ Netmask ▪ Gateway ▪ Service switch ▪ MAC-Address ▪ EtherNetIP Port 44818 ▪ Modbus TCP Port 502 ▪ Webserver TCP Port 80	Ethernet-specific information Display depends on the fieldbus protocol used.
▶ SD card	Read only ▪ Total ▪ Free memory	

DIAG/System information		
Function	**Options**	**Info**
▶ System modules		
Backplane	Read only ▪ Description ▪ Serial number ▪ Order code ▪ Hardware version ▪ Software version	This information is provided for every electronics module available. Specify the serial numbers and order codes when servicing, for example.
Base		
Display module		
Extension module 1 … 8		
▶ Sensors	Read only ▪ Description ▪ Serial number ▪ Order code ▪ Hardware version ▪ Software version	This information is provided for every sensor available. Specify the serial numbers and order codes when servicing, for example.
▶ Save system information		
▷ Save to SD card	File name assigned automatically (includes a time stamp)	The information is saved on the SD card in a "sysinfo" subfolder. The csv file can be read and edited in MS Excel, for example. This file can be used when servicing the device.
▶ Heartbeat operation		Heartbeat functions are only available with the appropriate device version or optional access code.
▶ Device	Read only ▪ Total operating time ▪ Counters since reset – Availability – Operating time – Time in failure – Number of failures – MTBF – MTTR ▪ ▷ Reset counters	**Availability** Percentage of time no error with the status signal F was pending (**Operating time** - **Time in failure**)*100% / **Operating time** **Time in failure** Total amount of time an error with the status signal F was pending **MTBF** Mean Time Between Failures (**Operating time** - **Time in failure**)/**Number of failures** **MTTR** Mean Time To Repair **Time in failure**/**Number of failures**

1) Provided you give the manufacturer all the information about changes to the hardware.

12.13.2 Sensor information

▶ Select the channel you want from the list of channels.

Information in the following categories is displayed:
- **Extreme values**
  Extreme conditions to which the sensor was previously exposed, e. g. min./max. temperatures [2)]
- **Operating time**
  Operating time of the sensor under defined extreme conditions
- **Calibration information**
  Calibration data of the last calibration
- **Sensor specifications**
  Measuring range limits for main measured value and temperature
- **General information**
  Information on sensor identification

2) Not available for all sensor types.

The specific data that are displayed depends on what sensor is connected.

12.14 Firmware history

Date	Version	Changes to firmware	Documentation
05/2018	01.06.06	Improvement ▪ New soft keys **ALL** and **NONE** in multiple selection editors ▪ Manual factor for CAS51D nitrate ▪ Calibration timer and validity revised for pH, conductivity, oxygen and disinfection ▪ Clear distinction between offset and 1-point calibration for pH ▪ Heartbeat verification report can now also be downloaded via the web server ▪ Better description of diagnostics code 013	BA00444C/07/EN/23.18 BA00486C/07/EN/02.13 BA01245C/07/EN/05.17
06/2017	01.06.04	Expansion ▪ Heartbeat Monitoring and Verification ▪ New mathematical function **Formula** ▪ New sensors: CUS50D and chlorine dioxide ▪ Calibration via EtherNet/IP ▪ pdf generator for Heartbeat ▪ Sample calibration CAS51D Improvement ▪ Changes to conductivity concentration tables ▪ Renaming of parameter chlorine → **Disinfection** ▪ Last active measuring screen restored after reboot ▪ Cap and electrolyte replacements are logged in the calibration logbook (oxygen, disinfection) ▪ Manual factor for nitrate	BA00444C/07/EN/20.17 BA00486C/07/EN/02.13 BA01245C/07/EN/05.17
12/2016	01.06.03	Expansion ▪ Sensor calibration via Modbus or EtherNet/IP: conductivity, oxygen, chlorine and turbidity ▪ Four-factor adjustment, SAC ▪ Flash meter, nitrate and SAC ▪ New sludge model CUS51D Improvement ▪ Local display can be locked via Modbus or EtherNet/IP ▪ The output status can also be recorded in the data logbook ▪ Name of Endress+Hauser pH buffer 9.18 changed to 9.22 ▪ CUS51D factor can be read out via fieldbus	BA00444C/07/EN/19.16 BA00486C/07/EN/02.13 BA01245C/07/EN/04.16
03/2016	01.06.00	Expansion ▪ Heartbeat verification ▪ User-configurable diagnostic modules ▪ Four-factor adjustment, SAC ▪ Offset calibration CUS71D ▪ New mathematical function, cation exchanger ▪ Configurable byte order for Modbus Improvement ▪ Sensor calibration validity check (adaptation to batch processes) ▪ pH-Offset can be saved in either the sensor or the transmitter (previously only possible in the transmitter) ▪ CUS71D screens (gain display, trend information) ▪ Modified menu texts	BA00444C/07/EN/19.16 BA00486C/07/EN/02.13 BA01245C/07/EN/03.16

Date	Version	Changes to firmware	Documentation
03/2015	01.05.02	Expansion ▪ Conductivity: – New sensor: CLS82D – Concentration always visible in measuring menus – Expansion of concentration tables ▪ Oxygen: New sensor: COS81D ▪ SAC, nitrate, turbidity: – Calibration settings adjusted – Adjustable flash rate (expert function) Improvement Menu corrections (functions, designations)	BA00444C/07/EN/18.15 BA00486C/07/EN/02.13 BA01245C/07/EN/02.15
12/2013	01.05.00	Expansion ▪ Chemoclean Plus ▪ Calendar function for cleaning ▪ Conductivity: – Measuring range switching also for conductive conductivity measurement – External temperature signal via current input ▪ Oxygen: – External pressure or temperature signals via current input – Connected conductivity sensor can be used to calculate the salinity. ▪ SAC, nitrate, turbidity: Calibration settings can be configured via fieldbus ▪ Channel-specific diagnostics codes for HOLD function ▪ Support for EtherNet/IP Improvement ▪ Web server login for managing multiple users ▪ Set point and PID parameters for controllers can be configured via fieldbus	BA00444C/07/EN/17.13 BA00486C/07/EN/02.13 BA01245C/07/EN/01.13
04/2013	01.04.00	Expansion ▪ Conductivity: – Measuring range switching – Temperature compensation ISO 7888 at 20 °C ▪ Support for DIO module – Triggering of an external hold – Triggering a cleaning – PID regulator enable/disable – PFM can be used as analog input – Limit switch signals via digital output ▪ Keylock with password protection ▪ PID regulator: disturbance variable feed forward is supported ▪ pH: – Icon for manual and automatic temperature compensation (ATC/MTC+MED) – Monitoring for the upper and lower limits of the glass SCS value can be switched on or off independently of each other ▪ ISE – Simultaneous calibration of two parameters – User-defined electrode type – Raw measured value for current output selectable – Timer for membrane replacement ▪ Logbooks remain intact after a firmware update Improvement ▪ PROFIBUS address range for Siemens-S7 moved to the lower area. ▪ Offset icon still only present for pH or ORP ▪ Turbidity: autoranging can be switched off ▪ Export print (xml): device also provides a stylesheet.	BA00444C/07/EN/16.13 BA00445C/07/EN/16.13 BA00450C/07/EN/16.13 BA00451C/07/EN/15.13 BA00486C/07/EN/01.11

Date	Version	Changes to firmware	Documentation
06/2012	01.03.01	Improvement ▪ Hold via soft key ▪ Global or channel-specific hold stops automatic cleaning. Manual cleaning can be started, however. ▪ Adapted factory settings	BA00444C/07/EN/15.12 BA00445C/07/EN/15.12 BA00450C/07/EN/15.12 BA00451C/07/EN/14.11 BA00486C/07/EN/01.11
12/2011	01.03.00	Expansion ▪ Max. 8 sensor channels supported ▪ Current inputs ▪ PROFIBUS DP supported incl. Profile 3.02 ▪ Modbus RTU (RS485) supported ▪ Modbus TCP supported ▪ Integrated web server supported via TCPIP (RJ45) ▪ USP/EP (United States Pharmacopoeia and European Pharmacopoeia) and TDS (Total Dissolved Solids) for conductivity ▪ Icon for "controller active" in measuring screen Improvement ▪ Controller hold via analog input ▪ Adapted factory settings ▪ SAC: factory calibration in the field incl. reset filter operation time and lamp change ▪ ISFET leakage visible in measuring screen ▪ Multiselect for limit switch and cleaning cycles	BA00444C/07/EN/14.11 BA00445C/07/EN/14.11 BA00450C/07/EN/14.11 BA00451C/07/EN/14.11 BA00486C/07/EN/01.11
12/2010	01.02.00	Expansion ▪ Support for additional sensors: – Chlorine – ISE – SAC – Interface ▪ HART Communication ▪ Mathematical functions Improvement ▪ Modified software structures ▪ Adapted factory settings ▪ User-defined measuring screens	BA444C/07/EN/13.10 BA445C/07/EN/13.10 BA450C/07/EN/13.10 BA451C/07/EN/13.10 BA00486C/07/EN/01.11
03/2010	01.00.00	Original firmware	BA444C/07/EN/03.10 BA445C/07/EN/03.10 BA450C/07/EN/03.10 BA451C/07/EN/03.10

13 Maintenance

Effects on process and process control
- ▶ Take all the necessary precautions in time to ensure the operational safety and reliability of the entire measuring point.

The maintenance of the measuring point comprises:
- Calibration
- Cleaning the controller, assembly and sensor
- Checking the cables and connections.

⚠ WARNING

Process pressure and temperature, contamination, electrical voltage
Risk of serious or fatal injury
- ▶ If the sensor has to be removed during maintenance work, avoid hazards posed by pressure, temperature and contamination.
- ▶ Make sure the device is de-energized before you open it.
- ▶ Power can be supplied to switching contacts from separate circuits. De-energize these circuits before working on the terminals.

NOTICE

Electrostatic discharge (ESD)
Risk of damaging the electronic components
- ▶ Take personal protective measures to avoid ESD, such as discharging beforehand at PE or permanent grounding with a wrist strap.
- ▶ For your own safety, use only genuine spare parts. With genuine parts, the function, accuracy and reliability are also ensured after maintenance work.

13.1 Cleaning

13.1.1 Controller

- ▶ Clean the front of the housing using commercially available cleaning agents only.

The front of the housing is resistant to the following in accordance with DIN 42 115:
- Ethanol (for a short time)
- Diluted acids (max. 2% HCl)
- Diluted bases (max. 3% NaOH)
- Soap-based household cleaning agents

NOTICE

Cleaning agents not permitted
Damage to the housing surface or housing seal
- ▶ Never use concentrated mineral acids or alkaline solutions for cleaning.
- ▶ Never use organic cleaners such as acetone, benzyl alcohol, methanol, methylene chloride, xylene or concentrated glycerol cleaner.
- ▶ Never use high-pressure steam for cleaning.

13.1.2 Digital sensors

⚠ CAUTION

Cleaning not switched off during calibration or maintenance activities

Risk of injury due to medium or cleaning agent!

- ▶ If a cleaning system is connected, switch it off before removing a sensor from the medium.
- ▶ If you wish to check the cleaning function and have therefore not switched off the cleaning system, wear protective clothing, goggles and gloves or take other appropriate measures.

Replacing the sensor while ensuring measuring point availability

If an error occurs or the maintenance schedule stipulates that the sensor has to be replaced, use a new sensor, or a sensor that has been precalibrated in the laboratory.

- A sensor is calibrated in the laboratory under optimum external conditions, thereby ensuring better quality of measurement.
- You must perform onsite calibration if you use a sensor that is not precalibrated.

1. Remove the sensor that requires maintenance.
2. Install the new sensor.
   ↳ The sensor data are automatically accepted by the transmitter. A release code is not required.
   Measurement is resumed.
3. Take the used sensor back to the laboratory.
   ↳ In the laboratory you can get the sensor ready for reuse while ensuring the availability of the measuring point.

Prepare the sensor for reuse

1. Clean sensor.
   ↳ For this purpose, use the cleaning agent specified in the sensor manual.
2. Inspect the sensor for cracks or other damage.
3. If no damage is found, regenerate the sensor. Where necessary, store the sensor in a regeneration solution (→ sensor manual).
4. Recalibrate the sensor for reuse.

13.1.3 Assemblies

Refer to the assembly operating manual for information on servicing and troubleshooting the assembly. The assembly operating manual describes the procedure for mounting and disassembling the assembly, replacing the sensors and seals, and contains information on the material resistance properties, as well as on spare parts and accessories.

14 Repairs

14.1 Spare parts

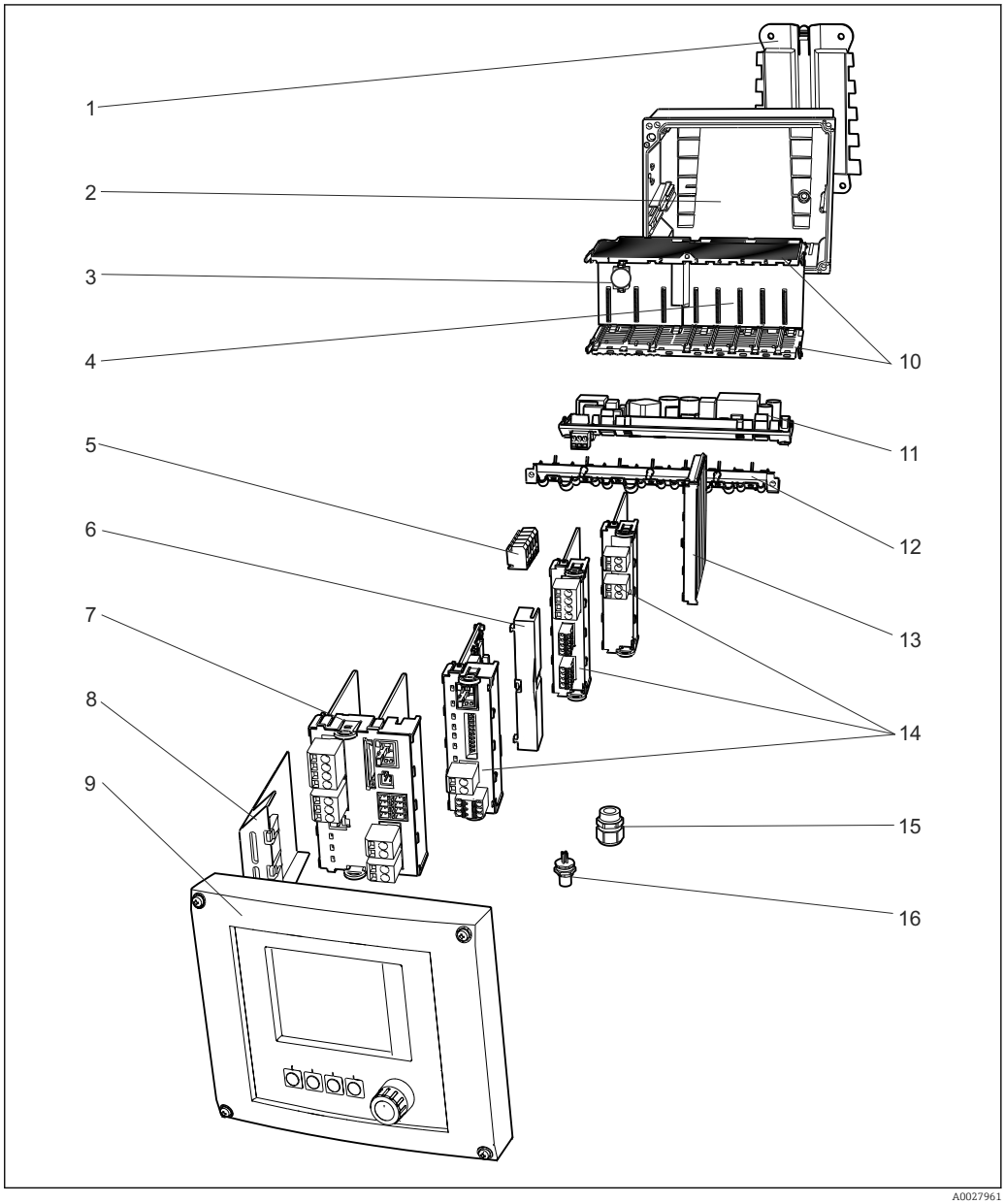

89 *Spare parts: You can find the names of spare parts and their order numbers in the following table.*

Item	Kit	Order no.
1	Kit CM44x: mounting plate ▪ Mounting plate ▪ Instructions for spare parts kit CM44x	71101763
2	Kit CM44x: housing base of field housing ▪ Housing base of field housing ▪ Cable mounting rail with double clamps and screws (item 12) ▪ Instructions for spare parts kit CM44x	71101734
3	Kit CM44x/CM44xR: electronics module backplane ▪ Backplane complete ▪ To be replaced only by Endress+Hauser Service	71101457

Item	Kit	Order no.
4	Kit CM44x/CM44xR: electronics module extension backplane ▪ Extension backplane complete ▪ To be replaced only by Endress+Hauser Service	71141366
5	Kit CM44x: power distribution terminals N+L ▪ Power distribution terminals ▪ Instructions for spare parts kit CM44x	71101461
6, 13	Kit CM44x: end covers and blanking covers 5 pcs. each	71107455
7, 8	Kit CM442: base module BASE-L 24V AC/DC ▪ Base module 24V AC/DC complete ▪ End cover (item 8) ▪ Instructions for spare parts kit CM44x	71100607
	Kit CM442: base module BASE-H 230V AC ▪ Base module 230V AC, complete ▪ End cover (item 8) ▪ Instructions for spare parts kit CM44x	71100611
	Kit CM444/CM448: base module BASE-E ▪ Base module, complete ▪ End cover (item 8) ▪ Connecting cable to connect to the power unit ▪ Instructions for spare parts kit CM44x	71141336
	Kit CM44x: terminal set, base module	71107452
9	Kit CM44x: cover KS field housing cpl. with display ▪ Cover KS field housing cpl. with display ▪ Display cable ▪ Instructions for spare parts kit CM44x	71104106
10, 12	Kit CM44x: internal housing parts, mechanical ▪ Insert side panels (item 10) ▪ Cable mounting rail with double clamps and screws (item 12) ▪ Instructions for spare parts kit CM44x	71101765
11	Kit CM444/CM448: expansion power unit ▪ EPS-H or EPS-L expansion power unit ▪ Instructions for spare parts kit CM44x	On request
No graphic	Kit CM44x: connecting cable, power unit ▪ To connect to base module BASE-E ▪ Instructions for spare parts kit CM44x	71155580

Item	Kit	Order no.
14	Kit CM44x/ CM44xR: extension module AOR (2 relays + 2 current outputs) ▪ Extension module AOR, complete ▪ Instructions for spare parts kit CM44x	71111053
	Kit CM44x/CM44xR: terminal set, extension module AOR	71107453
	Kit CM44x/CM44xR: extension module 2R (2 relays) ▪ Extension module 2R complete ▪ Instructions for spare parts kit CM44x	71125375
	Kit CM44x/CM44xR: extension module 4R (4 relays) ▪ Extension module 4R complete ▪ Instructions for spare parts kit CM44x	71125376
	Kit CM44x/CM44xR: terminal set, extension module 2R, 4R	71155581
	Kit CM44x/CM44xR: extension module 2AO (2 x 0/4 to 20 mA) ▪ Extension module 2AO complete ▪ Instructions for spare parts kit CM44x	71135632
	Kit CM44x/CM44xR: extension module 4AO (4 x 0/4 to 20 mA) ▪ Extension module 4AO complete ▪ Instructions for spare parts kit CM44x	71135633
	Kit CM44x/CM44xR: terminal set, extension module 2AO, 4AO	71155582
	Kit CM44x/CM44xR: extension module DIO (2 x digital input, digital output in each case) ▪ Extension module DIO, complete ▪ Instructions for spare parts kit CM44x	71135638
	Kit CM44x/CM44xR: terminal set, extension module DIO	71219784
	Kit CM44x/CM44xR: extension module 2DS (2 x digital sensor) ▪ Extension module 2DS complete ▪ Instructions for spare parts kit CM44x	71135631
	Kit CM44x/CM44xR: extension module 2AI (2 x analog input 0/4 to 20 mA) ▪ Extension module 2AI complete ▪ Instructions for spare parts kit CM44x	71135639
	Kit CM44x/CM44xR: extension module 485 (Ethernet configuration) ▪ Extension module 485 complete ▪ With activation code extendable to PROFIBUS DP or Modbus RS 485 or Modbus TCP or EtherNet/IP ▪ Instructions for spare parts kit CM44x	71135634
	Kit CM44x/CM44xR: terminal set for extension module 2AI, 485	71155583
15	Kit CM44x: set of 6 glands, metric ▪ Accessories kit, M cable glands ▪ Instructions for spare parts kit CM44x	71101768
	Kit CM44x: set of 6 glands, NPT ▪ Accessories kit, NPT cable glands ▪ Instructions for spare parts kit CM44x	71101770
	Kit CM44x: set of 6 glands, G ▪ Accessories kit, G cable glands ▪ Instructions for spare parts kit CM44x	71101771
16	M12 built-in socket 6-pin, complete with cables	71107456
No graphic	Kit CM44x: field housing display cable ▪ Display cable ▪ Instructions for spare parts kit CM44x	71101762
No graphic	Kit CM44x: dummy plug for cable bushing 6 pieces	71104942
No graphic	Kit CM44x: set of hinges 10 pieces	71107454
No graphic	CDI plug-in connector with counter nut M20x1.5	51517507

14.2 Return

The product must be returned if repairs or a factory calibration are required, or if the wrong product was ordered or delivered. As an ISO-certified company and also due to legal regulations, Endress+Hauser is obliged to follow certain procedures when handling any returned products that have been in contact with medium.

To ensure the swift, safe and professional return of the device:

- Refer to the website www.endress.com/support/return-material for information on the procedure and conditions for returning devices.

14.3 Disposal

The device contains electronic components. and must therefore be disposed of in accordance with regulations on the disposal of electronic waste.

- Observe the local regulations.

Always dispose of batteries in accordance with local regulations on battery disposal.

15 Accessories

The following are the most important accessories available at the time this documentation was issued.

▶ For accessories not listed here, please contact your Service or Sales Center.

15.1 Protective cover

CYY101
- Weather protection cover for field devices
- Absolutely essential for field installation
- Material: stainless steel 1.4301 (AISI 304)
- Order No. CYY101-A

15.2 Post mounting kit

Post mounting kit CM44x
- For securing the field housing to horizontal and vertical posts and pipes
- Order No. 71096920

15.3 Measuring cable

Memosens data cable CYK10
- For digital sensors with Memosens technology
- Product Configurator on the product page: www.endress.com/cyk10

Technical Information TI00118C

Memosens data cable CYK11
- Extension cable for digital sensors with Memosens protocol
- Product Configurator on the product page: www.endress.com/cyk11

Technical Information TI00118C

15.4 Sensors

15.4.1 Glass electrodes

Orbisint CPS11D
- pH electrode for process technology
- Optional SIL version for connecting to SIL transmitter
- With dirt-repellent PTFE diaphragm
- Product Configurator on the product page: www.endress.com/cps11d

Technical Information TI00028C

Memosens CPS31D
- pH electrode with gel-filled reference system with ceramic diaphragm
- Product Configurator on the product page: www.endress.com/cps31d

Technical Information TI00030C

Ceraliquid CPS41D
- pH electrode with ceramic junction and KCl liquid electrolyte
- Product Configurator on the product page: www.endress.com/cps41d

Technical Information TI00079C

Ceragel CPS71D
- pH electrode with reference system including ion trap
- Product Configurator on the product page: www.endress.com/cps71d

Technical Information TI00245C

Memosens CPS171D
- pH electrode for bio-fermenters with digital Memosens technology
- Product Configurator on the product page: www.endress.com/cps171d

Technical Information TI01254C

Orbipore CPS91D
- pH electrode with open aperture for media with high dirt load
- Product Configurator on the product page: www.endress.com/cps91d

Technical Information TI00375C

Orbipac CPF81D
- Compact pH sensor for installation or immersion operation
- In industrial water and wastewater
- Product Configurator on the product page: www.endress.com/cpf81d

Technical Information TI00191C

15.4.2 Enamel pH electrodes

Ceramax CPS341D
- pH electrode with pH-sensitive enamel
- Meets highest demands of measuring accuracy, pressure, temperature, sterility and durability
- Product Configurator on the product page: www.endress.com/cps341d

Technical Information TI00468C

15.4.3 ORP sensors

Orbisint CPS12D
- ORP sensor for process technology
- Product Configurator on the product page: www.endress.com/cps12d

Technical Information TI00367C

Ceraliquid CPS42D
- ORP electrode with ceramic junction and KCl liquid electrolyte
- Product Configurator on the product page: www.endress.com/cps42d

Technical Information TI00373C

Ceragel CPS72D
- ORP electrode with reference system including ion trap
- Product Configurator on the product page: www.endress.com/cps72d

Technical Information TI00374C

Orbipac CPF82D
- Compact ORP sensor for installation or immersion operation in process water and wastewater
- Product Configurator on the product page: www.endress.com/cpf82d

Technical Information TI00191C

Orbipore CPS92D
- ORP electrode with open aperture for media with high dirt load
- Product Configurator on the product page: www.endress.com/cps92d

Technical Information TI00435C

15.4.4 pH ISFET sensors

Tophit CPS441D
- Sterilizable ISFET sensor for low-conductivity media
- Liquid KCl electrolyte
- Product Configurator on the product page: www.endress.com/cps441d

Technical Information TI00352C

Tophit CPS471D
- Sterilizable and autoclavable ISFET sensor for food and pharmaceutics, process engineering
- Water treatment and biotechnology
- Product Configurator on the product page: www.endress.com/cps471d

Technical Information TI00283C

Tophit CPS491D
- ISFET sensor with open aperture for media with high dirt load
- Product Configurator on the product page: www.endress.com/cps491d

Technical Information TI00377C

15.4.5 pH and ORP combined sensors

Memosens CPS16D
- Combined pH/ORP sensor for process technology
- With dirt-repellent PTFE diaphragm
- With Memosens technology
- Product Configurator on the product page: www.endress.com/cps16D

Technical Information TI00503C

Memosens CPS76D
- Combined pH/ORP sensor for process technology
- Hygienic and sterile applications
- With Memosens technology
- Product Configurator on the product page: www.endress.com/cps76d

Technical Information TI00506C

Memosens CPS96D
- Combined pH/ORP sensor for chemical processes
- With poison-resistant reference with ion trap
- With Memosens technology
- Product Configurator on the product page: www.endress.com/cps96d

Technical Information TI00507C

15.4.6 Conductivity sensors with inductive measurement of conductivity

Indumax CLS50D
- High-durability inductive conductivity sensor
- For standard and hazardous area applications
- With Memosens technology
- Product Configurator on the product page: www.endress.com/cls50d

Technical Information TI00182C

Indumax H CLS54D
- Inductive conductivity sensor
- With certified, hygienic design for foodstuffs, beverages, pharmaceuticals and biotechnology
- Product Configurator on the product page: www.endress.com/cls54d

Technical Information TI00508C

15.4.7 Conductivity sensors with conductive measurement of conductivity

Condumax CLS15D
- Conductive conductivity sensor
- For pure water, ultrapure water and Ex applications
- Product Configurator on the product page: www.endress.com/CLS15d

Technical Information TI00109C

Condumax CLS16D
- Hygienic, conductive conductivity sensor
- For pure water, ultrapure water and Ex applications
- With EHEDG and 3A approval
- Product Configurator on the product page: www.endress.com/CLS16d

Technical Information TI00227C

Condumax CLS21D
- Two-electrode sensor in plug-in head version version
- Product Configurator on the product page: www.endress.com/CLS21d

Technical Information TI00085C

Memosens CLS82D
- Four-electrode sensor
- With Memosens technology
- Product Configurator on the product page: www.endress.com/cls82d

Technical Information TI01188C

15.4.8 Oxygen sensors

Oxymax COS22D
- Sterilizable sensor for dissolved oxygen
- With Memosens technology or as an analog sensor
- Product Configurator on the product page: www.endress.com/cos22d

Technical Information TI00446C

Oxymax COS51D
- Amperometric sensor for dissolved oxygen
- With Memosens technology
- Product Configurator on the product page: www.endress.com/cos51d

Technical Information TI00413C

Oxymax COS61D
- Optical oxygen sensor for drinking water and industrial water measurement
- Measuring principle: quenching
- With Memosens technology
- Product Configurator on the product page: www.endress.com/cos61d

Technical Information TI00387C

Memosens COS81D
- Sterilizable, optical sensor for dissolved oxygen
- With Memosens technology
- Product Configurator on the product page: www.endress.com/cos81d

Technical Information TI01201C

15.4.9 Disinfection sensors

CCS142D
- Membrane-covered amperometric sensor for free chlorine
- Measuring range 0.01 to 20 mg/l
- With Memosens technology
- Product Configurator on the product page: www.endress.com/ccs142d

Technical Information TI00419C

15.4.10 Ion-selective sensors

ISEmax CAS40D
- Ion selective sensors
- Product Configurator on the product page: www.endress.com/cas40d

Technical Information TI00491C

15.4.11 Turbidity sensors

Turbimax CUS51D
- For nephelometric measurements of turbidity and solids in wastewater
- 4-beam scattered light method
- With Memosens technology
- Product Configurator on the product page: www.endress.com/cus51d

Technical Information TI00461C

Turbimax CUS52D
- Hygienic Memosens sensor for turbidity measurement in drinking water, process water and in utilities
- With Memosens technology
- Product Configurator on the product page: www.endress.com/cus52d

Technical Information TI01136C

15.4.12 SAC and nitrate sensors

Viomax CAS51D
- SAC and nitrate measurement in drinking water and wastewater
- With Memosens technology
- Product Configurator on the product page: www.endress.com/cas51d

Technical Information TI00459C

15.4.13 Interface measurement

Turbimax CUS71D
- Immersion sensor for interface measurement
- Ultrasonic interface sensor
- Product Configurator on the product page: www.endress.com/cus71d

Technical Information TI00490C

15.5 Additional functionality

15.5.1 Hardware extension modules

Kit, extension module AOR
- 2 x relay, 2 x 0/4 to 20 mA analog output
- Order No. 71111053

Kit, extension module 2R
- 2 x relay
- Order No. 71125375

Kit, extension module 4R
- 4 x relay
- Order No. 71125376

Kit, extension module 2AO
- 2 x 0/4 to 20 mA analog output
- Order No. 71135632

Kit, extension module 4AO
- 4 x analog output 0/4 to 20 mA
- Order No. 71135633

Kit, extension module 2DS
- 2 x digital sensor, Memosens
- Order No. 71135631

Kit, extension module 2AI
- 2 x 0/4 to 20 mA analog input
- Order No. 71135639

Kit, extension module DIO
- 2 x digital input
- 2 x digital output
- Auxiliary voltage supply for digital output
- Order No. 71135638

Kit, extension module 485
- Ethernet configuration
- Can be extended to PROFIBUS DP or Modbus RS485 or Modbus TCP or EtherNet/IP. This requires an additional activation code which can be ordered separately.
- Order No. 71135634

Kit, extension module ETH
- Ethernet configuration
- Can be extended to Modbus TCP or EtherNet/IP. This requires an additional activation code which can be ordered separately.
- Order No. 71279810

Upgrade kit, extension module 485 with PROFIBUS DP
- Extension module 485
- PROFIBUS DP (+ Ethernet configuration)
- Order No. 71140888

Upgrade kit, extension module 485 with Modbus RS485
- Extension module 485
- Modbus RS485 (+ Ethernet configuration)
- Order No. 71140889

Upgrade kit, extension module 485 with Modbus TCP
- Extension module 485
- Modbus TCP (+ Ethernet configuration)
- Order No. 71140890

Upgrade kit, extension module 485 with EtherNet/IP
- Extension module 485
- EtherNet/IP (+ Ethernet configuration)
- Order No. 71219868

Upgrade kit, extension module ETH with Modbus TCP
- Extension module ETH
- Modbus TCP (+ Ethernet configuration)
- Order No. 71279809

Upgrade kit, extension module ETH with EtherNet/IP
- Extension module ETH
- EtherNet/IP (+ Ethernet configuration)
- Order No. 71279812

Kit CM442: upgrade kit to CM444/CM448
- Extension power supply unit 100 to 230 V AC and extension backplane
- Base module BASE-E
- You must quote the serial number of the device when ordering the kit.
- Order No. 71135644

Kit CM442: upgrade kit to CM444/CM448
- Extension power supply unit 24 V DC and extension backplane
- Base module BASE-E
- You must quote the serial number of the device when ordering the kit.
- Order No. 71211434

15.5.2 Firmware and activation codes

SD card with Liquiline firmware
- Industrial Flash Drive, 1 GB
- Order No. 71127100

You must quote the serial number of the device when ordering the activation code.

Activation code for digital HART communication
Order No. 71128428

Activation code for PROFIBUS DP
Order No. 71135635

Activation code for Modbus RS485
Order No. 71135636

Activation code for Modbus TCP for module 485
Order No. 71135637

Activation code for EtherNet/IP for module 485
Order No. 71219871

Activation code for Modbus TCP for module ETH
Order No. 71279813

Activation code for EtherNet/IP for module ETH
Order No. 71279830

Kit CM442: activation code for 2nd digital sensor input
Order No. 71114663

Kit CM444/CM448: upgrade code for 2 x 0/4 to 20 mA for BASE-E
Order No. 71140891

Activation code for feedforward control
- Requires current input or fieldbus communication
- Order No. 71211288

Activation code for measuring range switch
- Requires digital inputs or fieldbus communication
- Order No. 71211289

Activation code for ChemocleanPlus
- Requires relays or digital outputs or fieldbus communication and optional digital inputs
- Order No. 71239104

Activation code for Heartbeat Verification and Monitoring
Order No. 71367524

Activation code for ion exchanger operating time
- Mathematical function
- Order No. 71367531

Activation code for mathematics
- Formula editor
- Order No. 71367541

Activation code for remote calibration interface
Order No. 71367542

15.6 Software

Memobase Plus CYZ71D
- PC software to support laboratory calibration
- Visualization and documentation of sensor management
- Sensor calibrations saved in the database
- Product Configurator on the product page: www.endress.com/cyz71d

Technical Information TI00502C

Field Data Manager Software MS20
- PC software for central data management
- Visualization of series of measurements and logbook events
- SQL database for secure data storage

15.7 Other accessories

15.7.1 SD card

- Industrial Flash Drive, 1 GB
- Weight: 2 g
- Order No. 71110815

15.7.2 Cable glands

Kit CM44x: gland M
- Set, 6 pieces
- Order No. 71101768

Kit CM44x: gland NPT
- Set, 6 pieces
- Order No. 71101770

Kit CM44x: gland G
- Set, 6 pieces
- Order No. 71101771

Kit CM44x: dummy plug for cable gland
- Set, 6 pieces
- Order No. 71104942

15.7.3 M12 built-in socket and cable junction with Velcro strip

Kit CM42/CM442/CM444/CM448: external CDI socket
- Socket with terminated connecting cables and counter nut
- Order No. 51517507

Kit CM442/CM444/CM448/CSF48: M12 built-in socket for digital sensors
- Pre-terminated
- Order No. 71107456

Kit CM442/CM444/CM448/CSF48: M12 built-in socket for PROFIBUS DP/Modbus RS485
- B-coded, pre-terminated
- Order No. 71140892

Kit CM442/CM444/CM448/CSF48: M12 built-in socket for Ethernet
- D-coded, pre-terminated
- Order No. 71140893

Kit: external CDI socket, complete
- Retrofit kit for CDI interface, with terminated connecting cables
- Order No. 51517507

Cable junction with Velcro strip
- 4 pieces, for sensor cable
- Order No. 71092051

15.7.4 Communication-specific accessories

Commubox FXA191
- Intrinsically safe HART communication with FieldCare via the RS232C interface
- Transforms HART signals on RS 232C interface

Technical Information TI00237F

Commubox FXA195
Intrinsically safe HART communication with FieldCare via the USB port

Technical Information TI00404F

Commubox FXA291
Connects the CDI interface of measuring devices with the USB port of the computer or laptop

Technical Information TI00405C

Wireless HART adapter SWA70
- Wireless device connection
- Easily integrated, offers data protection and transmission safety, can be operated in parallel with other wireless networks, minimum cabling complexity

Technical Information TI00061S

Fieldgate FXA320
Gateway for the remote interrogation of 4-20 mA measuring devices via a Web browser

Technical Information TI00025S

FieldXpert SFX100
Compact, flexible and robust industrial handheld terminal for remote configuration and for obtaining measured values via the HART current output

Operating Instructions BA00060S

15.7.5 System components

RIA14, RIA16
- Field display unit for integration into 4-20 mA circuits
- RIA14 in flameproof metal enclosure

Technical Information TI00143R and TI00144R

RIA15
- Process display unit, Digital display unit for integration into 4-20 mA circuits
- Panel mounting
- With optional HART communication

Technical Information TI01043K

16 Technical data

16.1 Input

Measured variables	→ Documentation of the connected sensor
Measuring ranges	→ Documentation of the connected sensor
Types of input	▪ Digital sensor inputs for sensors with Memosens protocol ▪ Analog current inputs (optional) ▪ Digital inputs (optional)
Input signal	Depending on version: ▪ Max. 8 x binary sensor signal ▪ 2 x 0/4 to 20 mA (optional), passive, potentially isolated from one another and from the sensor inputs ▪ 0 to 30 V
Cable specification	**Cable type** Memosens data cable CYK10 or sensor fixed cable, each with cable end sleeves or M12 round-pin connector (optional) **Cable length** Max. 100 m (330 ft)

16.2 Digital inputs, passive

Electrical specification	▪ drawing power (passive) ▪ Galvanically isolated
Span	▪ High: 11 to 30 V DC ▪ Low: 0 to 5 V DC
Nominal input current	max. 8 mA
PFM function	Minimum pulse width: 500 µs (1 kHz)
Test voltage	500 V
Cable specification	Max. 2.5 mm^2 (14 AWG)

16.3 Current input, passive

Span	> 0 to 20 mA

Signal characteristic	Linear
Internal resistance	Non-linear
Test voltage	500 V

16.4 Output

Output signal

Depending on version:
- 2 x 0/4 to 20 mA, active, galvanically isolated from one another and from the sensor circuits
- 4 x 0/4 to 20 mA, active, galvanically isolated from one another and from the sensor circuits
- 6 x 0/4 to 20 mA, active, galvanically isolated from one another and from the sensor circuits
- 8 x 0/4 to 20 mA, active, galvanically isolated from one another and from the sensor circuits
- Optional HART communication (only via current output 1:1)

HART	
Signal encoding	FSK ± 0.5 mA above current signal
Data transmission rate	1200 baud
Galvanic isolation	Yes
Load (communication resistor)	250 Ω

PROFIBUS DP/RS485	
Signal encoding	EIA/TIA-485, PROFIBUS DP-compliant acc. to IEC 61158
Data transmission rate	9.6 kBd, 19.2 kBd, 45.45kBd, 93.75 kBd, 187.5 kBd, 500 kBd, 1.5 MBd, 6 MBd, 12 MBd
Galvanic isolation	Yes
Connectors	Spring terminal (max. 1.5 mm), bridged internally (T-function), optional M12
Bus termination	Internal slide switch with LED display

Modbus RS485	
Signal encoding	EIA/TIA-485
Data transmission rate	2,400, 4,800, 9,600, 19,200, 38,400, 57,600 and 115,200 baud
Galvanic isolation	Yes
Connectors	Spring terminal (max. 1.5 mm), bridged internally (T-function), optional M12
Bus termination	Internal slide switch with LED display

Ethernet and Modbus TCP	
Signal encoding	IEEE 802.3 (Ethernet)
Data transmission rate	10/100 MBd
Galvanic isolation	Yes
Connection	RJ45, M12 optional
IP address	DHCP (default) or configuration via menu

EtherNet/IP	
Signal encoding	IEEE 802.3 (Ethernet)
Data transmission rate	10/100 MBd
Galvanic isolation	Yes
Connection	RJ45, M12 optional (D-encoded)
IP address	DHCP (default) or configuration via menu

Signal on alarm

Adjustable, as per NAMUR Recommendation NE 43
- In measuring range 0 to 20 mA (HART is not available with this measuring range):
  Error current from 0 to 23 mA
- In measuring range 4 to 20 mA:
  Error current from 2.4 to 23 mA
- Factory setting for error current for both measuring ranges:
  21.5 mA

Load

Max. 500 Ω

Linearization/transmission behavior

Linear

16.5 Digital outputs, passive

Electrical specification

- Passive
- Open collector, max. 30 V, 15 mA

PFM function

Minimum pulse width: 500 µs (1 kHz)

Auxiliary voltage

Electrical specification
- Galvanically isolated
- Unregulated, 24 V DC
- Max. 50 mA (per DIO module)

Test voltage

500 V

Cable specification

Max. 2.5 mm^2 (14 AWG)

16.6 Current outputs, active

Span	0 to 23 mA 2.4 to 23 mA for HART communication
Signal characteristic	Linear
Electrical specification	**Output voltage** Max. 24 V **Test voltage** 500 V
Cable specification	**Cable type** Recommended: shielded cable **Cable specification** Max. 2.5 mm^2 (14 AWG)

16.7 Relay outputs

Electrical specification

Relay types
- 1 single-pin changeover contact (alarm relay)
- 2 or 4 single-pin changeover contacts (optional with extension modules)

Maximum load
- Alarm relay: 0.5 A
- All other relays: 2.0 A

Relay switching capacity

Base module (Alarm relay)

Switching voltage	Load (max.)	Switching cycles (min.)
230 V AC, cosΦ = 0.8 to 1	0.1 A	700,000
	0.5 A	450,000
115 V AC, cosΦ = 0.8 to 1	0.1 A	1,000,000
	0.5 A	650,000
24 V DC, L/R = 0 to 1 ms	0.1 A	500,000
	0.5 A	350,000

Extension modules

Switching voltage	Load (max.)	Switching cycles (min.)
230 V AC, cosΦ = 0.8 to 1	0.1 A	700,000
	0.5 A	450,000
	2 A	120,000
115 V AC, cosΦ = 0.8 to 1	0.1 A	1,000,000
	0.5 A	650,000
	2 A	170,000
24 V DC, L/R = 0 to 1 ms	0.1 A	500,000
	0.5 A	350,000
	2 A	150,000

Cable specification

Max. 2.5 mm^2 (14 AWG)

16.8 Protocol-specific data

HART

Manufacturer ID	11_h
Device type	$155D_h$
Device revision	001_h
HART version	7.2
Device description files (DD/DTM)	www.endress.com/hart Device Integration Manager DIM
Device variables	16 user-definable and 16 predefined device variables, dynamic variables PV, SV, TV, QV
Supported features	PDM DD, AMS DD, DTM, Field Xpert DD

PROFIBUS DP

Manufacturer ID	11_h
Device type	$155D_h$
Profile version	3.02
GSD files	www.endress.com/profibus Device Integration Manager DIM
Output values	16 AI blocks, 8 DI blocks
Input variables	4 AO blocks, 8 DO blocks
Supported features	▪ 1 MSCY0 connection (cyclical communication, master class 1 to slave) ▪ 1 MSAC1 connection (acyclical communication, master class 1 to slave) ▪ 2 MSAC2 connections (acyclical communication, master class 2 to slave) ▪ Device lock: The device can be locked using the hardware or software. ▪ Addressing using DIL switches or software ▪ GSD, PDM DD, DTM

Modbus RS485

Protocol	RTU/ASCII
Function codes	03, 04, 06, 08, 16, 23
Broadcast support for function codes	06, 16, 23
Output data	16 measured values (value, unit, status), 8 digital values (value, status)
Input data	4 setpoints (value, unit, status), 8 digital values (value, status), diagnostic information
Supported features	Address can be configured using switch or software

Modbus TCP

TCP port	502
TCP connections	3
Protocol	TCP
Function codes	03, 04, 06, 08, 16, 23
Broadcast support for function codes	06, 16, 23
Output data	16 measured values (value, unit, status), 8 digital values (value, status)
Input data	4 setpoints (value, unit, status), 8 digital values (value, status), diagnostic information
Supported features	Address can be configured using DHCP or software

EtherNet/IP

Log	EtherNet/IP	
ODVA certification	Yes	
Device profile	Generic device (product type: 0x2B)	
Manufacturer ID	$0x049E_h$	
Device type ID	$0x109C_h$	
Polarity	Auto-MIDI-X	
Connections	CIP	12
	I/O	6
	Explicit message	6
	Multicast	3 consumers
Minimum RPI	100 ms (default)	
Maximum RPI	10000 ms	
System integration	EtherNet/IP	EDS
	Rockwell	Add-on-Profile Level 3, Faceplate for Factory Talk SE
IO data	Input (T → O)	Device status and diagnostic message with highest priority Measured values: ▪ 16 AI (analog input) + Status + Unit ▪ 8 DI (discrete input) + Status
	Output (O → T)	Actuating values: ▪ 4 A0 (analog output) + status + unit ▪ 8 DO (discrete output) + Status

Web server

The Web server enables full access to the device configuration, measured values, diagnostic messages, logbooks and service data via standard WiFi/WLAN/LAN/GSM or 3G routers with a user-defined IP address.

TCP port	80
Supported features	▪ Remote-controlled device configuration(1 session) ▪ Save/restore device configuration (via SD card) ▪ Logbook export (file formats: CSV, FDM) ▪ Access to Web server via DTM or Internet Explorer ▪ Login ▪ Web server can be switched off

16.9 Power supply

Supply voltage

CM442
Depending on version:
- 100 to 230 V AC, 50/60 Hz
  Maximum permitted fluctuation of mains supply voltage: ± 15 % of nominal voltage
- 24 V AC/DC, 50/60 Hz
  Maximum permitted fluctuation of mains supply voltage: + 20/- 15 % of nominal voltage

CM444 and CM448
Depending on the version,:
- 100 to 230 V AC, 50/60 Hz
  Maximum permitted fluctuation of mains supply voltage: ± 15 % of nominal voltage
- 24 V DC
  Maximum permitted fluctuation of mains supply voltage: + 20/- 15 % of nominal voltage

Fieldbus connection

Supply voltage: not applicable

Power consumption

CM442
Depending on supply voltage
- 100 to 230 V AC and 24 V AC:
  Max. 55 VA
- 24 V DC:
  Max. 22 W

CM444 and CM448
Depending on supply voltage
- 100 to 230 V AC:
  Max. 73 VA
- 24 V DC:
  Max. 68 W

Fuse

Fuse not exchangeable

Overvoltage protection

Integrated overvoltage/lightning protection as per EN 61326
Protection category 1 and 3

Cable entries

Identification of the cable entry on housing base	Suitable gland
B, C, H, I, 1-8	M16x1.5 mm/NPT3/8"/G3/8
A, D, F, G	M20x1.5 mm/NPT1/2"/G1/2
E	-
⏚	M12x1.5 mm
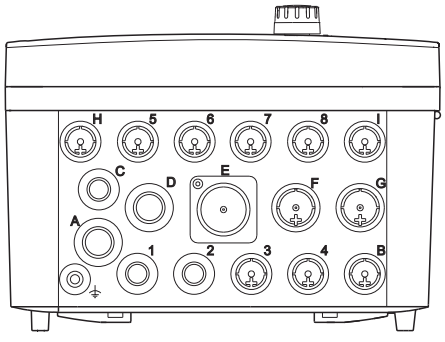 A0018025	**Recommended assignment** 1-8 Sensors 1-8 A Power supply B RS485 In or M12 DP/RS485 C Can be used freely D,F,G Current outputs and inputs, relays H Can be used freely I RS485 Out or M12 Ethernet E Do not use

Cable specification

Cable gland	Permitted cable diameter
M16x1.5 mm	4 to 8 mm (0.16 to 0.32")
M12x1.5 mm	2 to 5 mm (0.08 to 0.20")
M20x1.5 mm	6 to 12 mm (0.24 to 0.48")
NPT3/8"	4 to 8 mm (0.16 to 0.32")
G3/8	4 to 8 mm (0.16 to 0.32")
NPT1/2"	6 to 12 mm (0.24 to 0.48")
G1/2	7 to 12 mm (0.28 to 0.48")

Cable glands mounted at the factory are tightened with 2 Nm.

16.10 Performance characteristics

Response time

Current outputs
t_{90} = max. 500 ms for an increase from 0 to 20 mA

Current inputs
t_{90} = max. 330 ms for an increase from 0 to 20 mA

Digital inputs and outputs
t_{90} = max. 330 ms for an increase from low to high

Reference temperature

25 °C (77 °F)

Measured error for sensor inputs

→ Documentation of the connected sensor

Measured error for current inputs and outputs

Typical measured errors:
< 20 µA (with current values < 4 mA)
< 50 µA (with current values 4 to 20 mA)
at 25 °C (77° F) each

Additional measured error depending on the temperature:
< 1.5 µA/K

Frequency tolerance of digital inputs and outputs

≤ 1%

Resolution of current inputs and outputs

< 5 µA

Repeatability

→ Documentation of the connected sensor

16.11 Environment

Ambient temperature

CM442
–20 to 60 °C (0 to 140 °F)

CM444

- Generally –20 to 55 °C (0 to 130 °F), with the exception of packages under the second point in the list
- –20 to 50 °C (0 to 120 °F) for the following packages:
  - CM444-**M40A7FI******+...
  - CM444-**M40A7FK******+...
  - CM444-**N40A7FI******+...
  - CM444-**N40A7FK******+...
  - CM444-**M4AA5F4******+...
  - CM444-**M4AA5FF******+...
  - CM444-**M4AA5FH******+...
  - CM444-**M4AA5FI******+...
  - CM444-**M4AA5FK******+...
  - CM444-**M4AA5FM******+...
  - CM444-**M4BA5F4******+...
  - CM444-**M4BA5FF******+...
  - CM444-**M4BA5FH******+...
  - CM444-**M4BA5FI******+...
  - CM444-**M4BA5FK******+...
  - CM444-**M4BA5FM******+...
  - CM444-**M4DA5F4******+...
  - CM444-**M4DA5FF******+...
  - CM444-**M4DA5FH******+...
  - CM444-**M4DA5FI******+...
  - CM444-**M4DA5FK******+...
  - CM444-**M4DA5FM******+...

CM448

- Generally –20 to 55 °C (0 to 130 °F), with the exception of packages under the second point in the list
- –20 to 50 °C (0 to 120 °F) for the following packages:
  - CM448-***6AA******+...
  - CM448-***8A4******+...
  - CM448-***8A5******+...
  - CM448-**28A3******+...
  - CM448-**38A3******+...
  - CM448-**48A3******+...
  - CM448-**58A3******+...
  - CM448-**68A3******+...
  - CM448-**26A5******+...
  - CM448-**36A5******+...
  - CM448-**46A5******+...
  - CM448-**56A5******+...
  - CM448-**66A5******+...
  - CM448-**22A7******+...
  - CM448-**32A7******+...
  - CM448-**42A7******+...
  - CM448-**52A7******+...
  - CM448-**62A7******+...
  - CM448-**A6A5******+...
  - CM448-**A6A7******+...
  - CM448-**B6A5******+...
  - CM448-**B6A7******+...
  - CM448-**C6A5******+...
  - CM448-**C6A7******+...
  - CM448-**D6A5******+...
  - CM448-**D6A7******+...

Storage temperature	-40 to +80 °C (-40 to 175 °F)

Humidity	10 to 95 %, non-condensating
Degree of protection	IP 66/67, impermeability and corrosion resistance in accordance with NEMA TYPE 4X
Vibration resistance	**Environmental tests** Vibration test based on DIN EN 60068-2, October 2008 Vibration test based on DIN EN 60654-3, August 1998

Post or pipe mounting

Frequency range	10 to 500 Hz (sinusoidal)	
Amplitude	10 to 57.5 Hz: 57.5 to 500 Hz:	0.15 mm 2 g [1]
Test duration	10 frequency cycles/ spatial axis, in 3 spatial axes (1 oct./ min)	

Wall mounting

Frequency range	10 to 150 Hz (sinusoidal)	
Amplitude	10 to 12.9 Hz: 12.9 to 150 Hz:	0.75 mm 0.5 g [1]
Test duration	10 frequency cycles/ spatial axis, in 3 spatial axes (1 oct./ min)	

1) g ... gravitational acceleration (1 g ≈ 9.81 m/s^2)

Electromagnetic compatibility	Interference emission and interference immunity as per EN 61326-1:2013, Class A for Industry
Electrical safety	IEC 61010-1, Class I equipment Low voltage: overvoltage category II Environment < 3000 m (< 9840 ft) above MSL
Degree of contamination	The product is suitable for pollution degree 4.
Pressure compensation to environment	Filter made of GORE-TEX used as pressure compensation element Ensures pressure compensation to environment and guarantees IP protection.

16.12 Mechanical construction

Dimensions	→ 15

Weight	Complete device	Approx. 2.1 kg (4.63 lbs), depending on the version
	Individual module	Approx. 0.06 kg (0.13 lbs)
	SD card	Max. 5 g (0.17 oz)

Materials

Housing base	PC-FR
Display cover	PC-FR
Display foil and soft keys	PE
Housing seal	EPDM
Module side panels	PC-FR
Module covers	PBT GF30 FR
Cable mounting rail	PBT GF30 FR, stainless steel 1.4301 (AISI304)
Clamps	Stainless steel 1.4301 (AISI304)
Threaded fasteners	Stainless steel 1.4301 (AISI304)
Cable glands	Polyamide V0 as per UL94

17 Installation and operation in hazardous environment Class I Div. 2

Non-sparking device for use in specified hazardous environment in accordance with:
- Class I Div. 2
- Gas group A, B, C, D
- Temperature class T4A:
  - CM442: 0 °C (32 °F) < T_a < 60 °C (140 °F)
  - CM444/8: 0 °C (32 °F) < T_a < 55 °C (131 °F) or 50 °C (110 °F) for specific versions (→ 153)
- Control drawing: 401204
- Suitable for indoor and outdoor use according to NEMA 4X, IP66/67

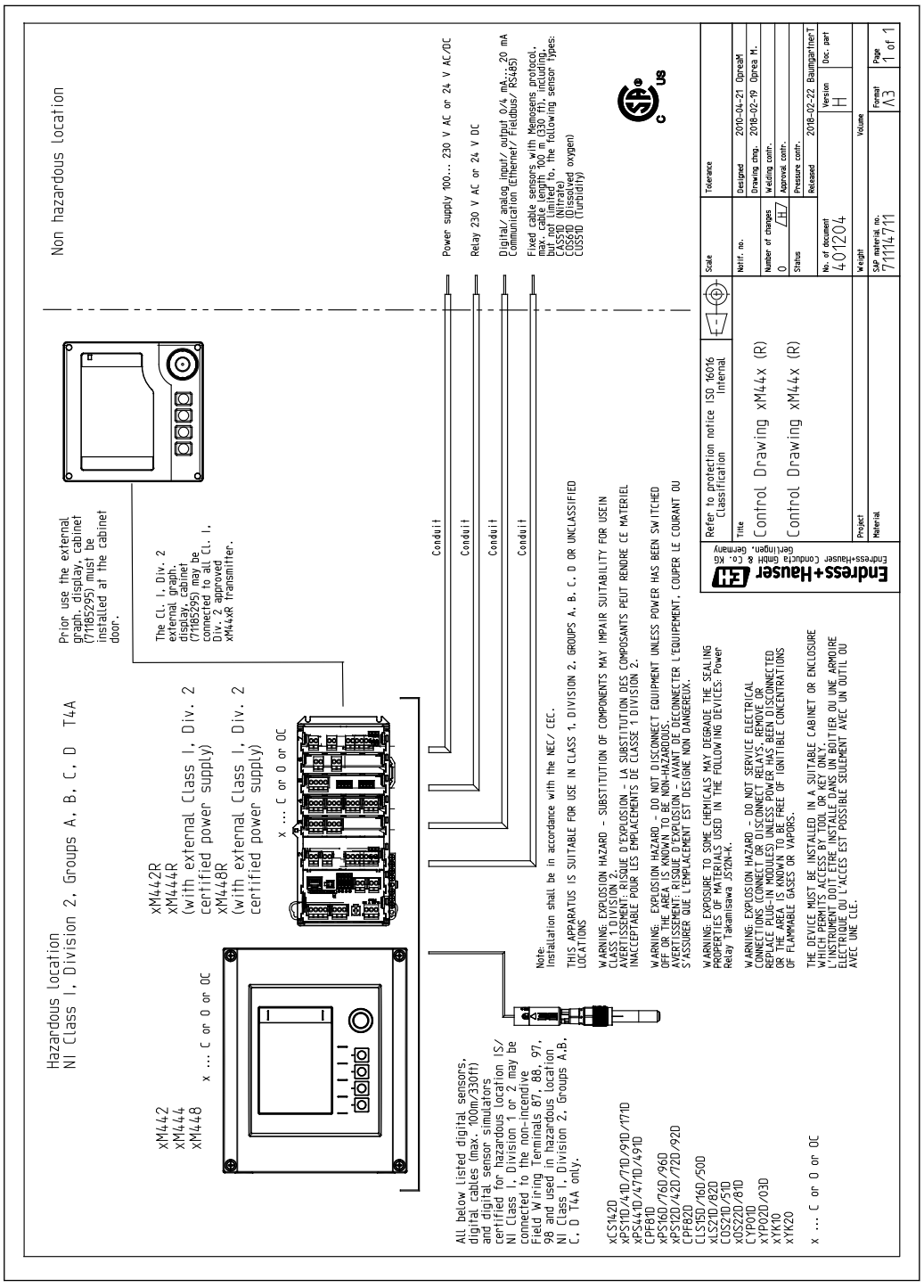

Index

A

Accessories
- Additional functionality . . . 140
- Communication-specific . . . 143
- Firmware and activation codes . . . 141
- Hardware extension modules . . . 140
- Measuring cable . . . 135
- Other . . . 143
- Post mounting kit . . . 135
- Protective cover . . . 135
- Sensors . . . 135
- Software . . . 142

Activation code . . . 67
Adapting the diagnostic behavior . . . 113
Additional functions
- Cleaning programs . . . 94
- Controller . . . 87
- Limit switches . . . 82
- Mathematical functions . . . 97
- Measuring range switching . . . 106

Advanced setup . . . 61
Alarm relay . . . 71
Ambient temperature . . . 153
Assignment views . . . 55

B

Basic settings . . . 55
Basic setup . . . 52
Bus termination . . . 38

C

Cable entries . . . 152
Cable specification . . . 145, 153
Cable terminals . . . 24
Calculated pH value . . . 101
Calibration . . . 110
Cation exchanger capacity . . . 101
Change password . . . 67
Check
- Connection . . . 40
- Installation . . . 19
- Installation and function . . . 50

Chemoclean . . . 33, 95
Chemoclean Plus . . . 96
Chlorine control with feedforward control . . . 77
Cleaning cycle . . . 97
Cleaning function . . . 74
Cleaning programs
- Chemoclean . . . 95
- Chemoclean Plus . . . 96
- Manual cleaning . . . 97
- Standard cleaning . . . 95

Cleaning types . . . 95
Cleaning unit . . . 33
Commissioning . . . 50
Configuration
- Binary inputs . . . 79
- Binary outputs . . . 80

Configure
- Actions . . . 48
- Display behavior . . . 51
- Free text . . . 48
- Numerical values . . . 47
- Operating language . . . 50
- Picklists . . . 47
- Tables . . . 49
- User definable screens . . . 51

Connection
- Cable entries . . . 152
- Check . . . 40
- Fieldbus . . . 34
- Measuring device . . . 21
- Optional module . . . 30
- Protective ground . . . 23
- Sensors . . . 27
- Supply voltage . . . 151
- Web server . . . 41, 43

Controller . . . 72, 87
Controller structure . . . 87
Current inputs . . . 68
Current outputs . . . 69

D

Data management . . . 65
Date . . . 56
Declaration of Conformity . . . 13
Degassed conductivity . . . 99
Degree of contamination . . . 155
Degree of protection . . . 155
Designated use . . . 7
Device description . . . 9
Device information . . . 124
Device status . . . 55
Device test . . . 123
Device variables . . . 75
Device-specific diagnostic messages . . . 114
Device-specific errors . . . 111
Diagnostic messages
- Adapting . . . 112
- Classification . . . 112
- Device-specific . . . 114
- Fieldbus . . . 112
- Local display . . . 112
- Outputting via the relay . . . 74
- Pending . . . 118
- Sensor-specific . . . 118
- Web browser . . . 112

Diagnostic modules . . . 108
Diagnostics list . . . 118
Dimensions . . . 15, 155
Disassembling . . . 18

Display 53
Display behavior 51
Disposal 134
Documentation 6
Dual conductivity 100

E
Electrical safety 155
Electromagnetic compatibility 155
Ensuring the degree of protection 39
EtherNet/IP 44, 64, 76, 151
Event logbook 118
Exporting the setup 66

F
Fieldbus
  Connection 34
  Termination 38
Firmware history 126
Firmware update 65
Formula 103
Function check 50
Fuse 152

H
Hardware settings 38
HART 43, 75, 149
HART bus address 62
Heartbeat 42
Heartbeat diagnostics 53
Heartbeat verification 123
Hold settings 57
Housing 22
Humidity 155

I
Incoming acceptance 12
Input
  Current input, passive 145
  Digital inputs, passive 145
  Measured variables 145
Input signal 145
Inputs
  Binary 76
  Current inputs 68
Installation
  Check 19
  Post 16
  Rail 17
  Wall 18
Installation conditions 15

L
Laplace representation 87
Limit switches 72, 82
Loading the setup 66
Logbooks 57, 119

M
M12 connector 35
Maintenance 129
Manipulated variable 72
Materials 156
Mathematical functions 97
  Calculated pH value 101
  Cation exchanger capacity 101
  Degassed conductivity 99
  Difference 98
  Dual conductivity 100
  Formula 103
  Redundancy 98
  rH value 99
Measured variables 145
Measuring mode 53
Measuring range switching 106
Measuring ranges 145
Modbus 44, 62, 75
Modbus RS485 150
Modbus TCP 150
Mounting plate 15
Mounting the measuring device 16

N
Nameplate 12

O
Occupational safety 7
Operating language 50
Operation
  Configure 47
  Display 53
  General settings 55
Operational safety 8
Output
  Current outputs, active 148
  Digital outputs, passive 147
  Output signal 146
  Relay outputs 149
Outputs
  Binary 76
  Current outputs 69
  EtherNet/IP 76
  HART 75
  Modbus 75
  PROFIBUS DP 75
  Relay 71
Overvoltage protection 152

P
Post-installation check 50
Power consumption 152
Power supply 151
  Cable entries 152
  Cable specification 153
  Connecting digital communication 34
  Connecting optional modules 30
  Connecting the measuring device 21
  Fuse 152
  Overvoltage protection 152

Power consumption 152
Protective ground connection 23
Sensor connection 27
Supply voltage 151
Power up 50
Process errors without messages 111
Product identification 12
Product safety 8
PROFIBUS DP 44, 62, 150
Device variables 75
PROFIBUS variables 75
PROFIBUS variables 75
Protective cover 16
Protocol-specific data 149

R
Relay 71
Remote operation 20
Repairs 131
Requirements for personnel 7
Resetting the measuring device 123
Return 134
rH value 99

S
Safety
IT 8
Occupational safety 7
Operation 8
Product 8
Safety instructions 7
Saving the setup 66
Scope of delivery 13
Sensor
Connection 27
Sensor information 125
Sensor-specific diagnostic messages 118
Service interface 42
Settings
Advanced 61
Diagnostics 61
EtherNet/IP 64
General 55
Hardware 38
HART bus address 62
Modbus 62
PROFIBUS DP 62
Web server 63
Setup
Basic 52
Simulation 121
Slot and port assignment 10
Soft keys in the measurement mode 53
Spare parts 131
Standard cleaning 95
State of the art 8
Storage temperature 154
Supply voltage 151
Symbols 5
System information 124
System integration
Fieldbus 43
Service interface 42
Web server 41

T
Technical data
Current input, passive 145
Current outputs, active 148
Digital inputs, passive 145
Digital outputs, passive 147
Environment 153
Input 145
Mechanical construction 155
Output 146
Performance characteristics 153
Protocol-specific data 149
Relay outputs 149
Technical personnel 7
Terminal diagram 11
Time 56
Troubleshooting 111
Diagnostic information 112
General troubleshooting 111
Types of input 145

U
Use
Designated 7
Non-designated 7
User definable screens 51

V
Vibration resistance 155

W
Warnings 5
Web server 63, 151
Weight 155

www.addresses.endress.com

Endress+Hauser

People for Process Automation

ENDRESS + HAUSER – PH AND ORP SENSORS

Level | Pressure | Flow | Temperature | Liquid Analysis | Registration | Systems Components | Services | Solutions

Technical Information

Orbipac CPF81/CPF82 and CPF81D/CPF82D

Compact pH/ORP electrodes, analog or with digital Memosens technology
For installation or immersion in industrial water and wastewater

Application

- Industrial and municipal wastewater treatment
- Water conditioning
- Condensate cleaning

Your benefits

- Suitable for flow and immersion installation
- Suitable for measurement within pH range 0 to 14 pH and temperature range 0 to 110 °C (32 to 230 °F)
- Analog pH electrodes with or without integrated temperature sensor, digital pH sensors with integrated temperature sensor
- With patented KNO_3 electrolyte bridge for better protection against electrode poisons like S^{2-} or CN^- ions
- Protection guard against damage
- Flat membrane suitable for high flow rates and fibrous media
- Optional integrated preamplifier for low-impedance and noise-free measuring value transmission
- NPT ¾" threaded connection, top and bottom

Further benefits offered by Memosens technology

- Maximum process safety through contactless inductive signal transmission
- Data safety through digital data transmission
- Easy handling thanks to storage of sensor-specific data in the sensor
- Predictive maintenance possible thanks to registration of sensor load data in the sensor

TI191C/07/en/07.08
71078186

Endress+Hauser

People for Process Automation

Function and system design

Measuring principle

pH measurement

The pH value is used as a unit of measurement for the acidity or alkalinity of a liquid medium. The membrane glass of the electrode supplies an electrochemical potential which is dependent upon the pH value of the medium. This potential is generated by the selective penetration of H^+ ions through the outer layer of the membrane. An electrochemical boundary layer with an electric potential forms at this point. An integrated Ag/AgCl reference system serves as reference electrode.
The transmitter converts the measured voltage into the corresponding pH value using the Nernst equation.

ORP measurement

The ORP potential is a unit of measurement for the state of equilibria between oxidizing and reducing components of a medium. ORP potential is measured similarly to the pH value. A platinum electrode is used instead of pH-sensitive membrane glass. Analog to the pH measurement, an integrated Ag/AgCl reference system is used as a reference electrode.

Important properties of CPF81D/CPF82D

Maximum process safety

The inductive and non-contacting measured value transmission of Memosens guarantees maximum process safety and offers the following benefits:

- All problems caused by moisture are eliminated.
  - The plug-in connection is non-contacting and therefore free from corrosion.
  - Measured value distortion from moisture is not possible.
  - The plug-in system can even be connected under water.
- The transmitter is galvanically decoupled from the medium. The result: No more need to ask about "symmetrically high-impedance" or "unsymmetrical" (for pH/ORP measurement) or an impedance converter.
- EMC safety is guaranteed by screening measures for the digital measured value transmission.

Data safety through digital data transfer

The Memosens technology digitalizes the measured values in the sensor and transfers them to the transmitter contactlessly and free from interference potential. The result:

- An automatic error message is generated if the sensor fails or the connection between sensor and transmitter is interrupted.
- The availability of the measuring point is dramatically increased by immediate error detection.

Easy handling

Sensors with Memosens technology have integrated electronics that allow for saving calibration data and further information such as total hours of operation and operating hours under extreme measuring conditions. When the sensor is mounted, the calibration data are automatically transferred to the transmitter and used to calculate the current measured value. Storing the calibration data in the sensor allows for calibration away from the measuring point. The result:

- Maintenance intervals can be defined based on all stored sensor load and calibration data and predictive maintenance is possible.
- The sensor history can be documented on external data carriers and evaluation programs at any time. Thus, the current application of the sensors can be made to depend on their previous history.
- The transmitter does not need to be installed close to the measuring point but can be placed in the control room.

Communication with the transmitter

Always connect digital sensors to a transmitter with Memosens technology. Data transmission to a transmitter for analog sensors is not possible.

Data storage

CPF81D

The digital sensors are able to store the following system data in the sensor.

- Manufacturing data
  - Serial number
  - Order code
  - Date of manufacture
- Calibration data
  - Calibration date
  - Calibrated slope at 25 °C (77 °F)
  - Calibrated zero point at 25 °C (77 °F)
  - Temperature offset
  - Number of calibrations
  - Serial number of the transmitter used for the last calibration
- Application data
  - Temperature application range
  - pH application range
  - Date of first commissioning
  - Maximum temperature value
  - Total operating hours
  - Operating hours at temperatures above 80 °C (176 °F) and 100 °C (212 °F)
  - Operating hours at very low and very high pH values (Nernst voltage below –300 mV, above +300 mV)
  - Glass membrane impedance

These system data can be displayed with Mycom S CPM153 and Liquiline M CM42 transmitters.

CPF82D

The digital sensors are able to store the following system data in the sensor.

- Manufacturing data
  - Serial number
  - Order code
  - Date of manufacture
- Calibration data
  - Calibration date
  - Calibrated offset (operating mode "mV")
  - % slope (operating mode "%")
  - Number of calibrations
  - Serial number of the transmitter used for the last calibration
- Application data
  - Temperature application range
  - ORP application range
  - Date of first commissioning
  - Operating hours

These system data can be displayed with Mycom S CPM153 or Liquiline M CM42 transmitters.

Input

Measured values

CPF81, CPF81D: pH value
Temperature
CPF82, CPF82D: ORP potential

Measuring range

CPF81/81D

Electrode version LH
- pH: 0 to 14 pH
- Temperature: 0 to 110 °C (32 to 230 °F)

Electrode version NN
- pH: 0 to 14 pH (reduced accuracy for 11 to 14 pH)
- Temperature: 0 to 80 °C (32 to 176 °F)

CPF82/82D

ORP potential: -1500 mV to +1500 mV

Caution!
Please note the process operating conditions.

Cable specification

CPF81/82 with fixed cable

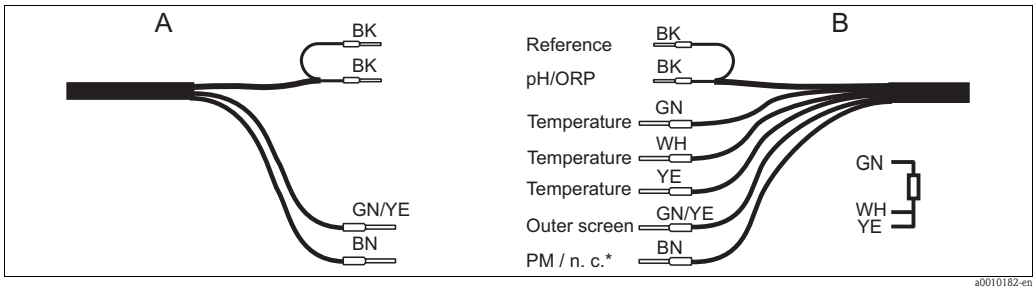

Measuring cable

A Fixed cable for CPF81 without temperature sensor and CPF82
B Fixed cable for CPF81 with temperature sensor
** PM is only connected for sensor versions with internal solution ground (CPF81-xxx2xx).*

CPF81/82 with TOP68 plug-in head

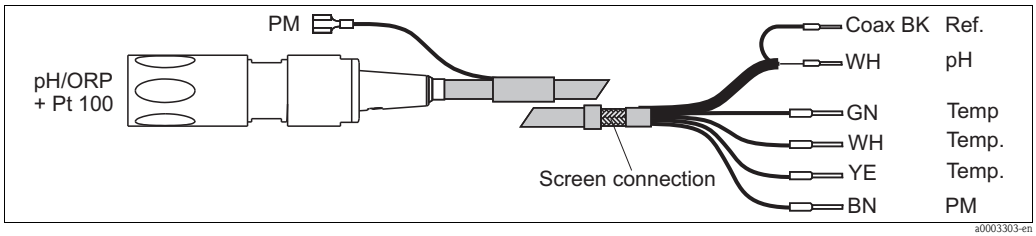

CPK9 special measuring cable

CPF81D/82D

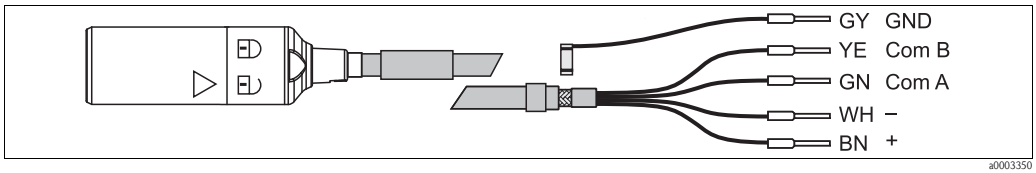

CYK10 Memosens data cable

Installation

Installation instructions

The electrode is suitable for flow and immersion installation.

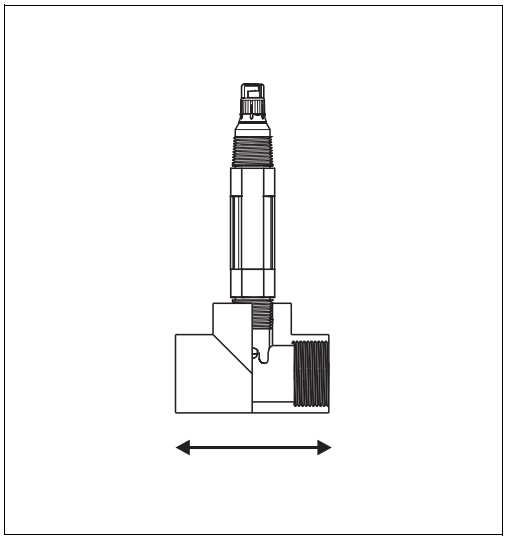

Flow installation

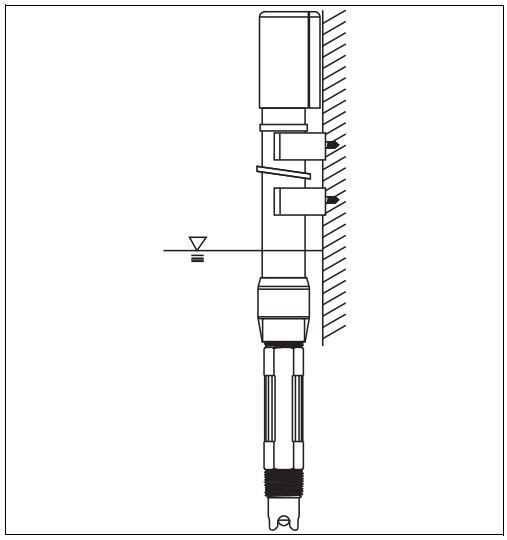

Immersion installation with Flowfit CYA611

Note!
Make sure to follow the installation instructions in the Operating Instructions of the used assembly.

Environment

Ambient temperature

Caution!
Danger of frost damage
Do not use the electrodes at temperatures below 0 °C (32 °F.)

Storage temperature

0 to 50 °C (32 to 122 °F)

Ingress protection

Fixed-cable version:	IP 67
TOP68 plug-in head:	IP 68 (1 m (3.28 ft) water column, 50 °C (122 °F), 168 h)
Memosens plug-in head:	IP 68 (10 m (32.8 ft) water column, 25 °C (77 °F), 45 days, 1 M KCl)

Process

Process temperature

CPF81/81D	
Electrode version LH:	0 to 110 °C (32 to 230 °F)
Electrode version NN:	0 to 80 °C (32 to 176 °F)
CPF82/82D	0 to 80 °C (32 to 176 °F)

Process pressure

0 to 10 bar @ 80 °C (0 to 145 psi @ 176 °F)

Pressure temperature load curve

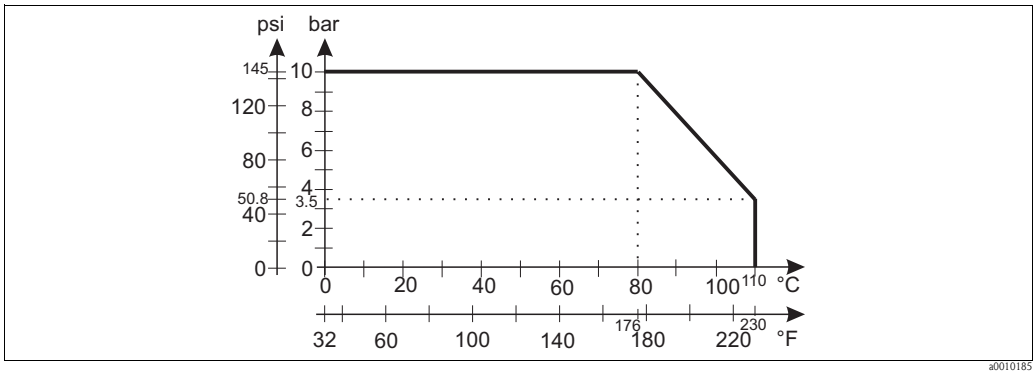

Glass impedance

150 MΩ @ 25 °C (77 °F)

Minimum conductivity

min. 50 µS/cm

Mechanical construction

Design, dimensions CPF81/82

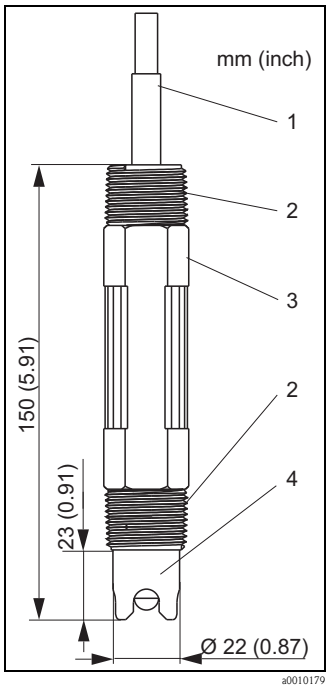

Fixed-cable version, short shaft, protection guard

1 Fixed cable
2 NPT ¾" thread
3 Across flats AF 26
4 Protection guard

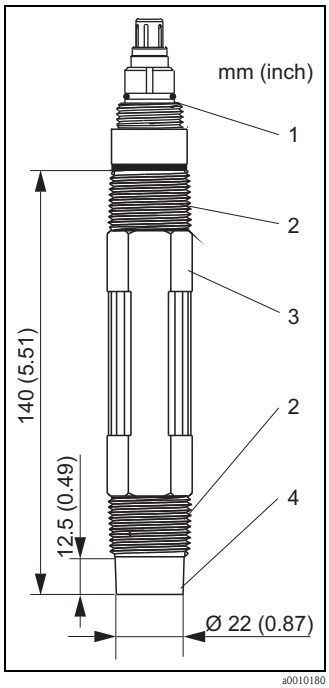

CPF81 with TOP68 plug-in head, short shaft, flat membrane

1 TOP68 plug-in head
2 NPT ¾" thread
3 Across flats AF 26
4 Flat membrane

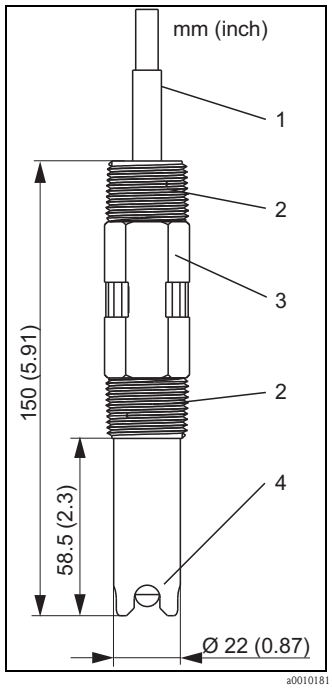

Fixed-cable version, long shaft, protection guard

1 Fixed cable
2 NPT ¾" thread
3 Across flats AF 26
4 Protection guard

Design, dimensions CPF81D/82D

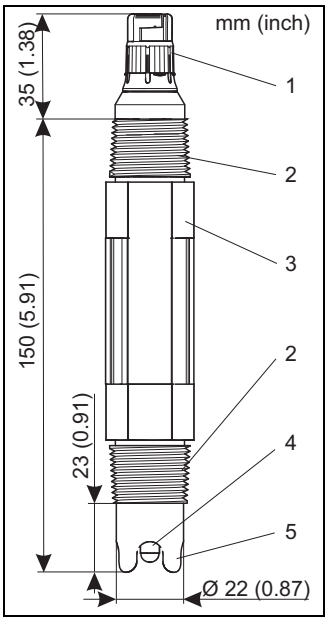

CPF82D, short shaft, protection guard
1 Memosens plug-in head
2 NPT ¾" thread
3 Across flats AF 26
4 Platinum ring
5 Protection guard

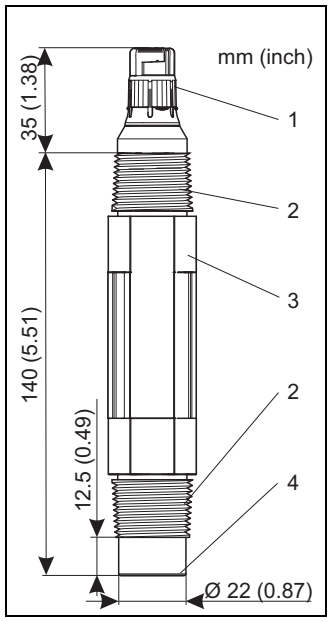

CPF81D, flat membrane
1 Memosens plug-in head
2 NPT ¾" thread
3 Across flats AF 26
4 Flat membrane

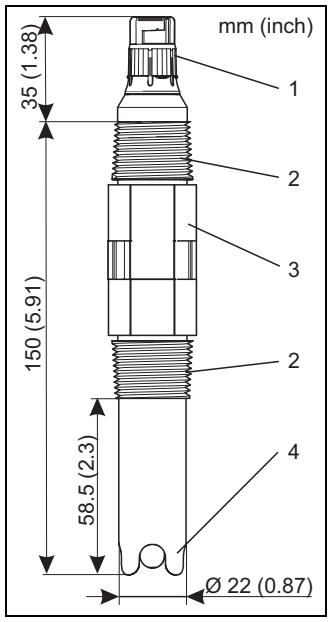

CPF81D, long shaft, protection guard
1 Memosens plug-in head
2 NPT ¾" thread
3 Across flats AF 26
4 Protection guard

Material

Housing, electrode shaft:	PPS
pH electrode (in contact with medium):	lead-free membrane glass, suitable for process applications
ORP electrode (in contact with medium):	platinum ring
Double chamber reference system:	KNO_3 and KCl/AgCl

Process connection

NPT ¾" thread

Integrated preamplifier (if ordered)

Design:	cast in sensor body
Power supply:	via integrated coin cells
Reference potential:	reference electrode

Note!
With preamplifier versions, the sensor check function (SCS) of the transmitter is not available and should be turned off.

Ordering information

Product structure CPF81

	Application range	
	LH	pH 0 to 14, T = 0 to 110 °C (32 to 230 °F)
	NN	pH 0 to 11, T = 0 to 80 °C (32 to 176 °F)

		Version	
		1	Insertion length 23 mm (0.91") with protection guard
		2	Insertion length 12.5 mm (0.51") with flat membrane
		3	Insertion length 58.5 mm (2.28") with protection guard

			Process connection	
			1	NPT ¾"
			2	NPT ¾" with integrated solution ground

				Equipment	
				A	No preamplifier, no Pt 100
				B	With preamplifier, no Pt 100
				C	No preamplifier, with Pt 100
				D	With preamplifier, with Pt 100

					Cable connection	
					2	4.5 m (15 ft) fixed cable
					3	9 m (30 ft) fixed cable
					4	13 m (45 ft) fixed cable
					8	TOP68/ESA plug-in head

CPF81-							complete order code

Product structure CPF82

	Application range	
	PA	ORP, platinum ring, 0 to 80 °C (32 to 176 °F)

		Version	
		1	Insertion length 23 mm (0.91") with protection guard
		3	Insertion length 58.5 mm (2.28") with protection guard

			Process connection	
			1	NPT ¾"

				Equipment	
				A	No preamplifier
				B	With preamplifier

					Cable connection	
					2	4.5 m (15 ft) fixed cable
					3	9 m (30 ft) fixed cable
					4	13 m (45 ft) fixed cable
					8	TOP68/ESA plug-in head

CPF82-							complete order code

Product structure CPF81D

	Version				
	7	Basic version			
		Application range			
		LH	0 to 14 pH; 0 to 110 °C (32 to 230 °F)		
		NN	0 to 11 pH; 0 to 80 °C (32 to 176 °F)		
			Insertion length		
			1	23 mm (0.91") + electrode guard	
			2	13 mm (0.51"); flat membrane	
			3	58 mm (2.28") + electrode guard	
				Approval	
				1	Non-hazardous area
CPF81D-					complete order code

Product structure CPF82D

	Version				
	7	Basic version			
		Application range			
		PA	ORP, platinum, 0 to 80 °C (32 to 176 °F)		
			Insertion length		
			1	23 mm (0.91") + electrode guard	
			3	58 mm (2.28") + electrode guard	
				Approval	
				1	Non-hazardous area
CPF82D-					complete order code

Accessories

Note!
In the following sections, you find the accessories available at the time of issue of this documentation.
For information on accessories that are not listed here, please contact your local service.

Transmitters

Liquiline M CM42
- Modular two-wire transmitter, stainless steel or plastic, field or panel instrument,
- various Ex approvals (ATEX, FM, CSA, Nepsi, TIIS),
- HART, PROFIBUS or FOUNDATION Fieldbus available
- Ordering acc. to product structure, see Technical Information (TI381C/07/en)

Liquisys M CPM223/253
- Transmitter for pH and ORP, field or panel-mounted housing,
- HART or PROFIBUS available
- Ordering acc. to product structure, see Technical Information (TI194C/07/en)

Mycom S CPM153
- Transmitter for pH and ORP, one or two channel version, Ex or non-Ex,
- HART or PROFIBUS available
- Ordering acc. to product structure, see Technical Information (TI233C/07/en)

Assembly

Immersion assembly Dipfit W CYA611
- For sensor immersion in basins, open channels and tanks, PVC
- Ordering acc. to product structure, see Technical Information TI166C/07/en

Buffer solutions

pH

High-quality buffer solutions of Endress+Hauser - CPY20
The secondary buffer solutions have been referenced to primary reference material of the PTB (German Federal Physico-technical Institute) and to standard reference material of NIST (National Institute of Standards and Technology) according to DIN 19266 by a DKD (German Calibration Service) accredited laboratory.

	pH value	
	A	pH 2.00 (accuracy ± 0.02 pH)
	C	pH 4.00 (accuracy ± 0.02 pH)
	E	pH 7.00 (accuracy ± 0.02 pH)
	G	pH 9.00 (accuracy ± 0.02 pH)
	I	pH 9.20 (accuracy ± 0.02 pH)
	K	pH 10.00 (accuracy ± 0.05 pH)
	M	pH 12.00 (accuracy ± 0.05 pH)

		Quantity	
		01	20 x 18 ml (0.68 fl.oz) only buffer solutions pH 4.00 and 7.00
		02	250 ml (8.45 fl.oz)
		10	1000 ml (0.26 US gal)
		50	5000 ml (1.32 US gal) canister for Topcal S

			Certificates	
			A	Buffer analysis certificate

				Version	
				1	Standard

CPY20-						complete order code

ORP

Technical buffer solutions for ORP electrodes
- +220 mV, pH 7.0, 100 ml (3.4 fl.oz.); order no. CPY3-0
- +468 mV, pH 0.1, 100 ml (3.4 fl.oz.); order no. CPY3-1

Measuring cables

CPK9 special measuring cable
- For sensors with TOP68 plug-in head, for high-temperature and high-pressure applications, IP 68
- Ordering acc. to product structure, see Technical Information (TI118C/07/en)

CYK10 Memosens data cable
- For digital sensors with Memosens technology
- Ordering according to product structure, see below

CYK10 product structure

	Certificates			
	A	Standard, non Ex		
	G	ATEX II 1G EEx ia IIC T6/T4		
		Cable length		
		03	Cable length: 3 m (9.8 ft)	
		05	Cable length: 5 m (16 ft)	
		10	Cable length: 10 m (33 ft)	
		15	Cable length: 15 m (49 ft)	
		20	Cable length: 20 m (66 ft)	
		25	Cable length: 25 m (82 ft)	
		88	... m length	
		89	... ft length	
			Ready-made	
			1	Wire terminals
CYK10-				complete order code

Instruments International

Endress+Hauser
Instruments International AG
Kaegenstrasse 2
4153 Reinach
Switzerland

Tel.+41 61 715 81 00
Fax+41 61 715 25 00
www.endress.com
info@ii.endress.com

Endress+Hauser

People for Process Automation

TI191C/07/en/07.08
Printed in Germany / FM+SGML 6.0 / DT

71078186

ENDRESS + HAUSER – MEMOSENS CABLES

BA00118C/14/FR/04.18
71396153

Manuel de mise en service
CYK10/11

Câbles de données Memosens

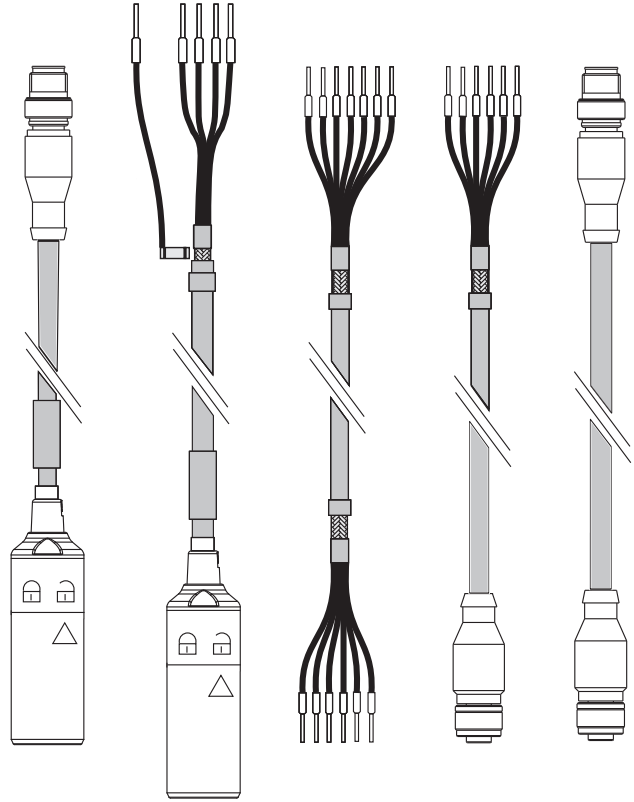

Endress+Hauser
People for Process Automation

EU-Konformitätserklärung
EU-Declaration of Conformity
Déclaration UE de Conformité

Endress+Hauser
People for Process Automation

CE

Company **Endress+Hauser Conducta GmbH+Co. KG**
Dieselstraße 24, 70839 Gerlingen, Germany

erklärt als Hersteller in alleiniger Verantwortung, dass das Produkt
declares as manufacturer under sole responsibility, that the product
déclare sous sa seule responsabilité en qualité de fabricant que le produit

Product

Memosens pH-Redox-Sensoren / pH/ORP sensors / capteurs pH/redox
CPSxxD-7***(*)G xx = 11, 12, 16, 41, 42, 71, 72, 76, 91, 96
CPS11D-8***G
CPS171D-BA7****
CPS4xxD-7**(*)G xx = 41, 71, 91

Sensor-Simulatoren / sensor simulators / simulateurs de capteurs
CYP01D-****G, CYP02D***G

Zusammen mit Messkabel / together with measuring cable / ensemble avec câble de mesure
CYK10-a**b a = G, E b = 1, 2
CYK20-BAab a = B1, B2 b = C1, C2

Regulations

den folgenden Europäischen Richtlinien entspricht:
conforms to following European Directives:
est conforme aux prescription des Directives Européennes suivantes :

EMC 2014/30/EU (L96/79)
ATEX 2014/34/EU (L96/309)

Standards

angewandte harmonisierte Normen oder normative Dokumente:
applied harmonized standards or normative documents:
normes harmonisées ou documents normatifs appliqués :

EN 61326-1	(2013)	EN 60079-0	(2012)	+A11:2013
EN 61326-2-3	(2013)	EN 60079-11	(2012)	
		EN 60079-26	(2007)	+ Corrigendum 1

Certification

EG-Baumusterprüfbescheinigung Nr. BVS 04 ATEX E 121 X
EC-Type Examination Certificate No.
Numéro de l'attestation d'examen CE de type

Ausgestellt von/issued by/délivré par DEKRA EXAM GmbH (0158)
Qualitätssicherung/Quality assurance/Système d'assurance qualité DEKRA EXAM GmbH (0158)

Gerlingen, 20.04.2016
Endress+Hauser Conducta GmbH+Co. KG

i. V. Jörg-Martin Müller
Technology

i. V. Sven-Matthias Scheibe
Technology Certifications and Approvals

EC_00356_01.16

Sommaire

1 Informations relatives au document 4
1.1 Mises en garde 4
1.2 Symboles 4

2 Consignes de sécurité fondamentales 5
2.1 Exigences imposées au personnel 5
2.2 Utilisation conforme 5
2.3 Sécurité du travail 5
2.4 Sécurité de fonctionnement 5
2.5 Sécurité du produit 6

3 Réception des marchandises et identification du produit 7
3.1 Réception des marchandises 7
3.2 Identification du produit 8

4 Schéma de raccordement (zone explosible) 10

5 Montage 11
5.1 Montage de la boîte de jonction CYK11 sur un mur 11
5.2 Montage de la boîte de jonction CYK11 sur un tube 12

6 Raccordement électrique 12
6.1 Câblage du CYK10 13
6.2 Câblage du CYK11 13
6.3 Câblage de la boîte de jonction CYK11 .. 16

7 Accessoires 18

1 Informations relatives au document

1.1 Mises en garde

Structure de l'information	Signification
DANGER **Cause (/conséquences)** Conséquences en cas de non-respect ▶ Mesure corrective	Cette information attire l'attention sur une situation dangereuse. Si cette situation n'est pas évitée, cela **aura** pour conséquence des blessures graves pouvant être mortelles.
AVERTISSEMENT **Cause (/conséquences)** Conséquences en cas de non-respect ▶ Mesure corrective	Cette information attire l'attention sur une situation dangereuse. Si cette situation n'est pas évitée, cela **pourra** avoir pour conséquence des blessures graves pouvant être mortelles.
ATTENTION **Cause (/conséquences)** Conséquences en cas de non-respect ▶ Mesure corrective	Cette information attire l'attention sur une situation dangereuse. Si cette situation n'est pas évitée, cela pourra avoir pour conséquence des blessures de gravité moyenne à légère.
AVIS **Cause / Situation** Conséquences en cas de non-respect ▶ Mesure / Remarque	Cette information attire l'attention sur des situations qui pourraient occasionner des dégâts matériels.

1.2 Symboles

Symbole	Signification
	Informations complémentaires, conseil
	Autorisé ou recommandé
	Interdit ou non recommandé
	Renvoi à la documentation de l'appareil
	Renvoi à la page
	Renvoi au schéma
	Résultat d'une étape

2 Consignes de sécurité fondamentales

2.1 Exigences imposées au personnel

- Le montage, la mise en service, la configuration et la maintenance du dispositif de mesure ne doivent être confiés qu'à un personnel spécialisé et qualifié.
- Ce personnel qualifié doit être autorisé par l'exploitant de l'installation en ce qui concerne les activités citées.
- Le raccordement électrique doit uniquement être effectué par des électriciens.
- Le personnel qualifié doit avoir lu et compris le présent manuel de mise en service et respecter les instructions y figurant.
- Les défauts sur le point de mesure doivent uniquement être éliminés par un personnel autorisé et spécialement formé.

Les réparations, qui ne sont pas décrites dans le manuel joint, doivent uniquement être réalisées par le fabricant ou par le service après-vente.

2.2 Utilisation conforme

Le câble de données Memosens CYK10 est utilisé pour la mesure avec des capteurs numériques avec technologie Memosens. Le câble prolongateur Memosens CYK11 est utilisé pour le raccordement de capteurs à câble surmoulé avec protocole Memosens et pour prolonger le raccordement d'installations utilisant le CYK10.

Le câble CYK11 ne peut pas être utilisé pour prolonger des points de mesure utilisant le CYK10 en zone explosible. Il est recommandé d'utiliser le câble de données Memosens CYK10 continu et non prolongé pour les points de mesure en zone explosible.

Toute autre utilisation que celle décrite dans le présent manuel risque de compromettre la sécurité des personnes et du système de mesure complet et est, par conséquent, interdite.

Le fabricant décline toute responsabilité quant aux dommages résultant d'une utilisation non réglementaire ou non conforme à l'emploi prévu.

2.3 Sécurité du travail

En tant qu'utilisateur, vous êtes tenu d'observer les prescriptions de sécurité suivantes :
- Instructions de montage
- Normes et directives locales
- Directives en matière de protection contre les explosions

2.4 Sécurité de fonctionnement

1. Avant la mise en service du système de mesure complet, vérifiez que tous les raccordements ont été correctement réalisés. Assurez-vous que les câbles électriques et les raccords de tuyau ne sont pas endommagés.
2. Ne mettez pas en service des appareils endommagés et protégez-les contre toute mise en service involontaire. Marquez le produit endommagé comme étant défectueux.
3. Si les défauts ne peuvent pas être éliminés :
   Mettez les appareils hors service et protégez-les de toute mise en service involontaire.

2.5 Sécurité du produit

2.5.1 Etat de la technique

Ce produit a été construit et contrôlé dans les règles de l'art, il a quitté nos locaux dans un état technique parfait. Les directives et normes européennes en vigueur ont été respectées.

2.5.2 Equipement électrique en zone explosible

IECEx et ATEX

Le système de raccordement câble-capteur inductif Memosens, constitué de :
- Capteurs agréés IECEx/ ATEX
- Câble de mesure CYK10-G**a, a = 1, 2
- Câble de mesure CYK10-I**a, a = 1, 2

est agréé pour les applications de mesure en zones explosibles conformément à
- Agrément de type IECEx BVS 11.0052 X
- Agrément de type CE BVS 04 ATEX E 121 X avec amendements

Le certificat IECEx correspondant et le certificat CE de conformité pour ATEX font partie intégrante de ce manuel de mise en service.

- Les capteurs et les câbles ne doivent pas être utilisés sous des conditions de process électrostatiquement critiques. Il faut éviter les forts courants de vapeur ou de poussière qui agissent directement sur le système de raccordement.
- Le câble de mesure Memosens CYK10 et sa tête de raccordement doivent être protégés contre le chargement électrostatique s'ils sont installés en zone Ex 0.
- Les versions Ex des câbles Memosens sont identifiés par une bague orange/rouge.
- La longueur de câble maximale admissible est de 100 m.
- Les directives pour les installations électriques en zones explosibles (EN/IEC 60079-14) doivent obligatoirement être respectées pour l'utilisation d'appareils et de capteurs.

Respectez les consignes de sécurité Ex du transmetteur et des capteurs pour le câblage.

IECEx

Les capteurs numériques agréés avec technologie Memosens peuvent être raccordés via les câbles de mesure certifiés IECEX suivants
- CYK10
- ou un câble de mesure Memosens identique dans sa structure, son hardware et sa fonction

uniquement au circuit de sortie capteur à sécurité intrinsèque, agréé IECEx, du transmetteur Liquiline M CM42 ou alternativement à la sortie capteur Memosens à sécurité intrinsèque, certifiée IECEx, qui respecte les valeurs maximales suivantes. En particulier, l'inductance interne effective et la capacité de la sortie capteur à sécurité intrinsèque, agréée, ne doivent pas dépasser les valeurs ci-dessous :

1. Paramètres d'entité [1)]	2. Paramètres d'entité [1)]
U_0 = 5,1 V	U_0 = 5,04 V
I_0 = 130 mA	I_0 = 80 mA
P_0 = 166 mW (caractéristique de sortie linéaire)	P_0 = 112 mW (caractéristique de sortie trapézoïdale)

1. Paramètres d'entité [1]	2. Paramètres d'entité [1]
C_i = 15 µF	C_i = 14,1 µF
L_i = 95 µH	L_i = 237,2 µH

1) Paramètres de raccordement électrique Ex

ATEX

Les capteurs numériques agréés avec technologie Memosens peuvent être raccordés via les câbles de mesure suivants

- CYK10
- ou un câble de mesure Memosens identique dans sa structure, son hardware et sa fonction

uniquement au circuit de sortie capteur à sécurité intrinsèque, agréé ATEX, du transmetteur Mycom S CPM153-G... ou Liquiline M CM42 ou alternativement à la sortie capteur Memosens à sécurité intrinsèque, certifiée ATEX, qui respecte les valeurs maximales suivantes. En particulier, l'inductance interne effective et la capacité de la sortie capteur à sécurité intrinsèque, agréée, ne doivent pas dépasser les valeurs ci-dessous :

1. Paramètres d'entité [1]	2. Paramètres d'entité
U_0 = 5,1 V	U_0 = 5,04 V
I_0 = 130 mA	I_0 = 80 mA
P_0 = 166 mW (caractéristique de sortie linéaire)	P_0 = 112 mW (caractéristique de sortie trapézoïdale)
C_i = 15 µF	C_i = 14,1 µF
L_i = 95 µH	L_i = 237,2 µH

1) Paramètres de raccordement électrique Ex

FM / CSA et Nepsi

Respectez les instructions du manuel de mise en service de votre transmetteur.

3 Réception des marchandises et identification du produit

3.1 Réception des marchandises

1. Vérifiez que l'emballage est intact.
   ↳ Signalez tout dommage constaté sur l'emballage au fournisseur.
   Conservez l'emballage endommagé jusqu'à la résolution du problème.

2. Vérifiez que le contenu est intact.
   ↳ Signalez tout dommage du contenu au fournisseur.
   Conservez les produits endommagés jusqu'à la résolution du problème.
3. Vérifiez que la totalité des marchandises a été livrée.
   ↳ Comparez avec la liste de colisage et le bon de commande.
4. Pour le stockage et le transport : protégez l'appareil contre les chocs et l'humidité.
   ↳ L'emballage d'origine assure une protection optimale.
   Les conditions ambiantes admissibles doivent être respectées (voir caractéristiques techniques).

Pour toute question, adressez-vous à votre fournisseur ou à votre agence.

3.2 Identification du produit

3.2.1 Plaque signalétique

Sur la plaque signalétique, vous trouverez les informations suivantes relatives à l'appareil :
- Identification du fabricant
- Référence de commande
- Numéro de série
- Conseils de sécurité et mises en garde

▶ Comparez les indications de la plaque signalétique à votre commande.

3.2.2 Certificats et agréments

Déclaration de conformité

La Déclaration de conformité Endress+Hauser garantit que le produit est conforme aux exigences de la Directive Européenne 2014/30/EU relative à la compatibilité électromagnétique et à la Directive ATEX 2014/34/EU. La conformité est vérifiée par le respect des normes listées dans la Déclaration de conformité.

Agréments

IECEx
Ex ia IIC T3/T4/T6 Ga

ATEX
ATEX II 1G Ex ia IIC T3/T4/T6 Ga

FM/CSA
IS/NI CLI Div1&2 GP ABCD

NEPSI
II 1G Ex ia IIC T3/T4/T6 Ga

Classes de température

Câble		Gamme de température ambiante T_a		
		T3	T4	T6
CYK10-G**a, a = 1, 2 CYK10-I**a, a = 1, 2	Câble de mesure	-15 °C à 135 °C (5 °F à 275 °F)	-15 °C à 120 °C (5 °F à 248 °F)	-15 °C à 70 °C (5 °C à 158 °F)

Si les températures ambiantes indiquées sont respectées, aucune température interdite pour la classe de température en question ne se produira sur le câble.

3.2.3 Contenu de la livraison

Câble Memosens

- 1 câble Memosens, version commandée
- 1 manuel de mise en service BA00118C/07/A2

Boîte de jonction CYK11

- Boîte de jonction complète, 6 bornes de raccordement, presse-étoupe et/ou douille M12
- Plaque de fixation
- Collier de serrage 40 à 60 mm

4 Schéma de raccordement (zone explosible)

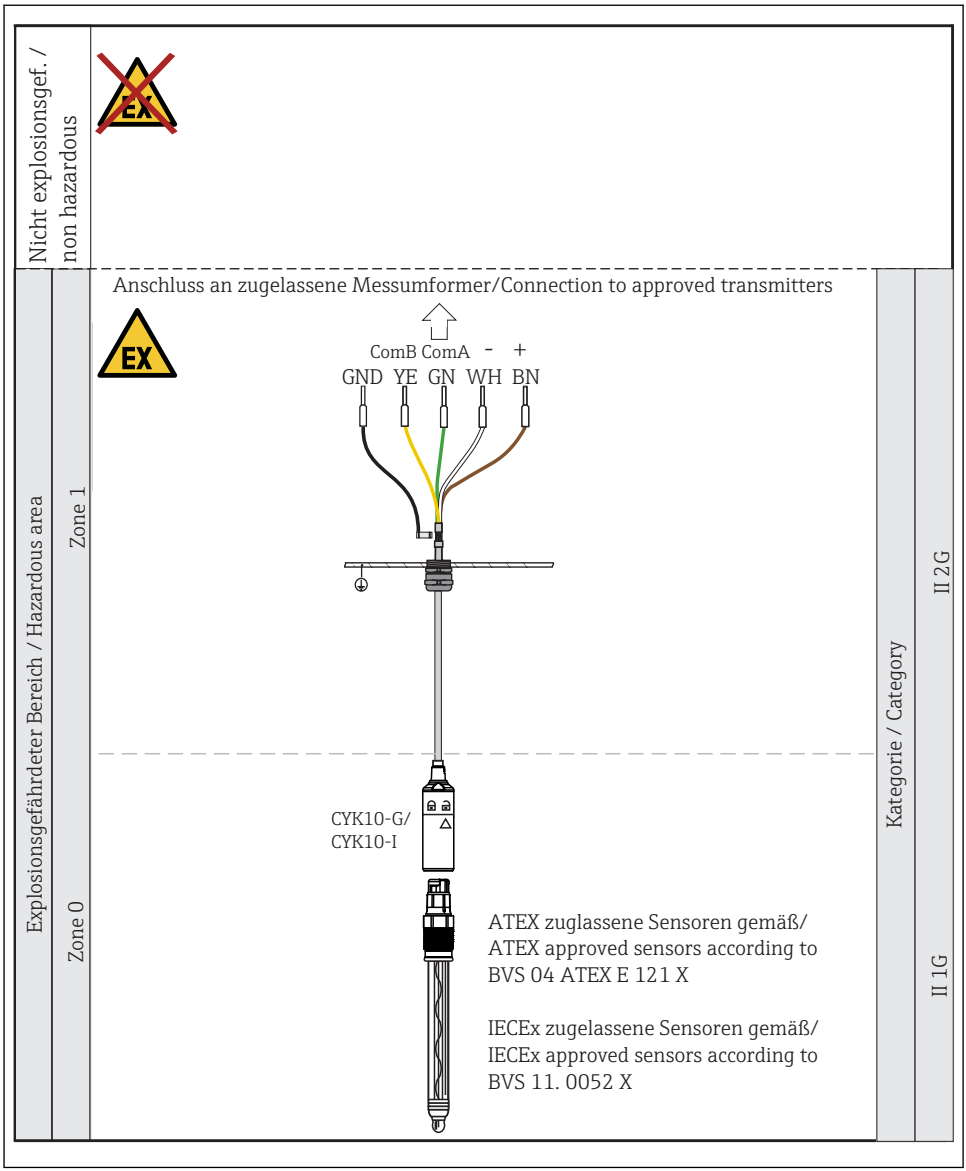

1 Raccordement en zone explosible

5 Montage

5.1 Montage de la boîte de jonction CYK11 sur un mur

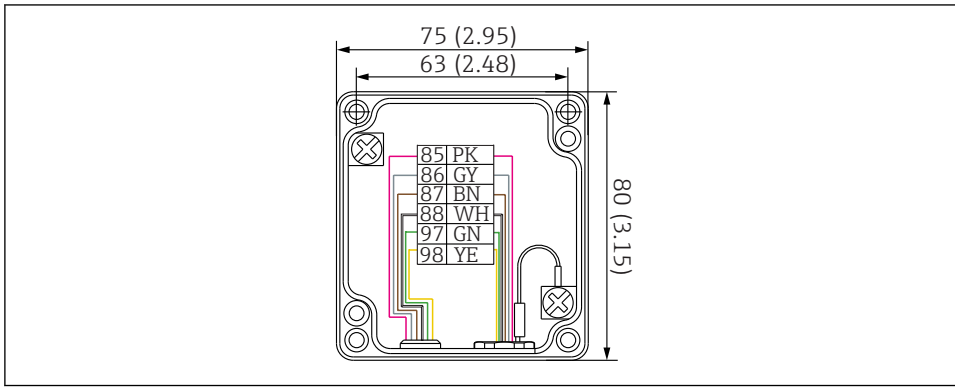

2 *Boîte de jonction, dimensions en mm (inch)*

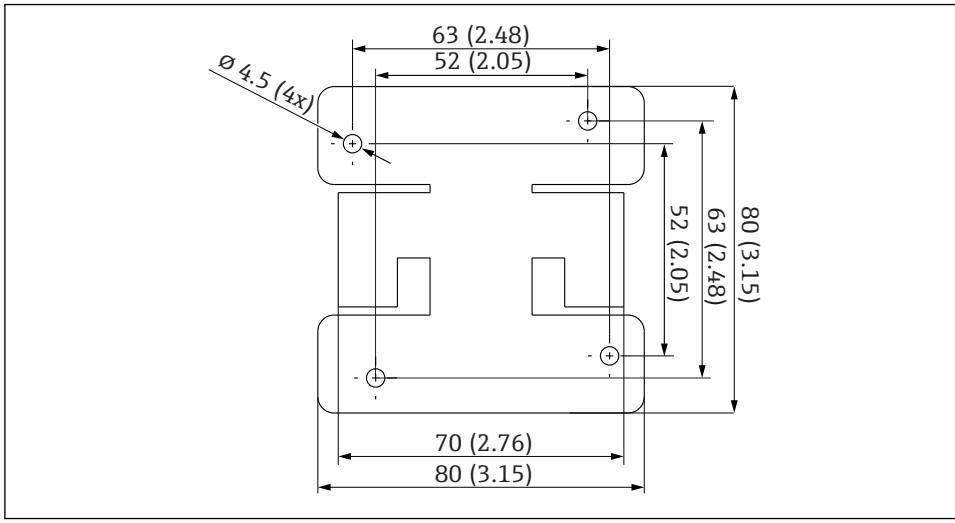

3 *Plaque de montage, dimensions en mm (inch)*

Montez la boîte de jonction de sorte que l'entrée des câbles se fasse par le bas.

Le montage s'effectue avec le capot avant retiré.

Vissez le boîtier de la boîte de jonction directement au mur ou sur la plaque de montage. La plaque de montage peut être utilisée comme gabarit de perçage.

5.2 Montage de la boîte de jonction CYK11 sur un tube

Montez la boîte de jonction de sorte que l'entrée des câbles se fasse par le bas.

1. Vissez le boîtier sur la plaque de montage. Il est ainsi possible de réaliser le montage sur des tubes horizontaux ou verticaux.
2. Pliez les pattes sur la plaque de montage au diamètre approximatif du tube support. Fixez le collier de serrage au tube et clipsez les pattes sous le collier.

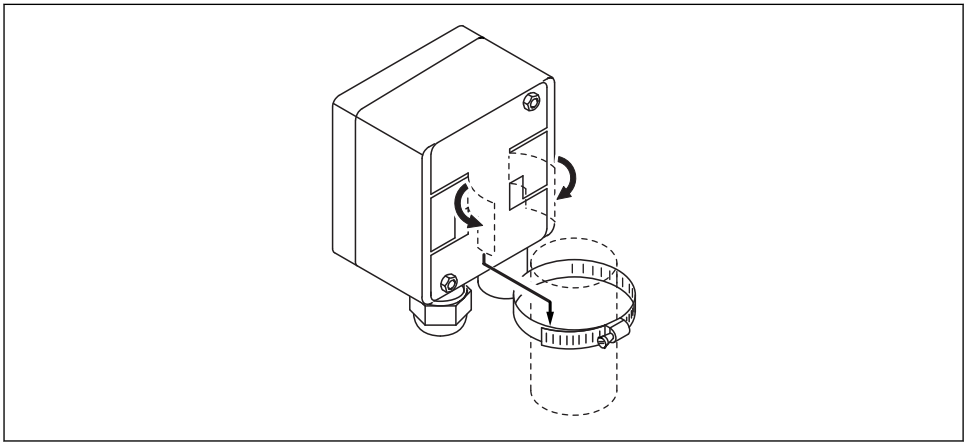

A0031081

4 Montage sur tube avec plaque de montage

6 Raccordement électrique

AVERTISSEMENT

Appareil sous tension

Un raccordement non conforme peut entraîner des blessures pouvant être mortelles.

- Seuls des électriciens sont habilités à réaliser le raccordement électrique.
- Les électriciens doivent avoir lu et compris le présent manuel de mise en service et respecter les instructions y figurant.
- **Avant le début** des travaux de raccordement, vérifiez qu'aucune tension n'est présente sur aucun des câbles.

6.1 Câblage du CYK10

6.1.1 CYK10 avec extrémités préconfectionnées

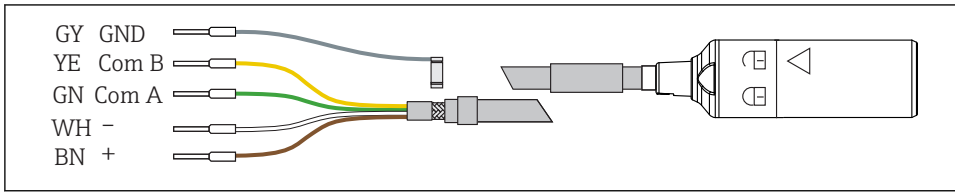

5 Raccordement électrique, extrémités préconfectionnées

Au lieu d'utiliser le GY, vous pouvez également réaliser la mise à la terre via les serre-câble dans le transmetteur.

6.1.2 CYK10 avec connecteur M12

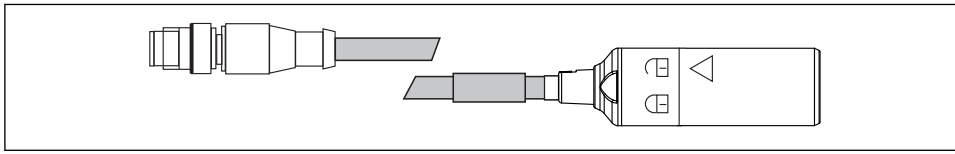

6 Raccordement électrique, connecteur M12

6.2 Câblage du CYK11

6.2.1 CYK11 avec extrémités préconfectionnées

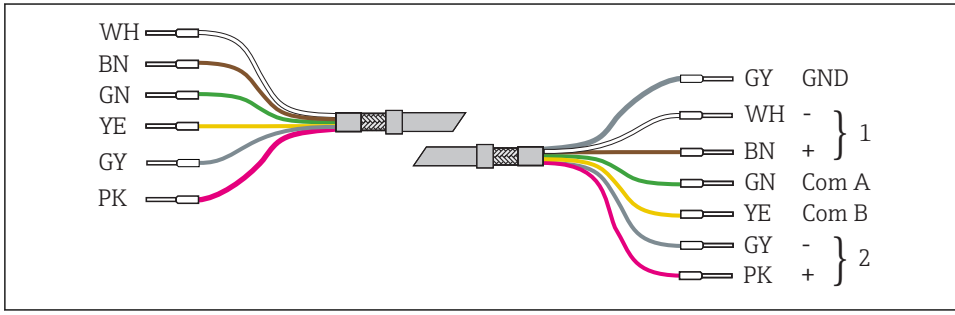

7 Raccordement électrique, extrémités préconfectionnées

1 Capteur Memosens
2 Capteur à câble surmoulé

6.2.2 CYK11 et capteur à câble surmoulé

Les couleurs de câble correspondent à celles des capteurs. Il est ainsi possible de réaliser un câblage direct.

Certains capteurs à câble surmoulé fonctionnent avec la tension de service Memosens et sont raccordés comme un capteur Memosens (par ex. CLS50D). Avant de réaliser la mise en service, vérifiez avec quelle alimentation électrique votre capteur fonctionne et raccordez-le en conséquence.

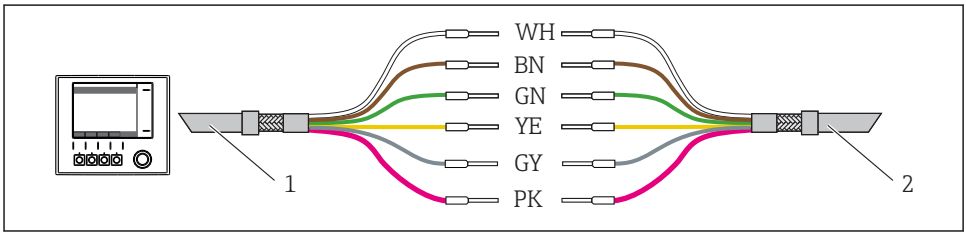

8 *Raccordement électrique, CYK11 et capteur à câble surmoulé*

1 CYK11
2 Capteur à câble surmoulé

6.2.3 CYK11 pour prolonger le CYK10

Les fils "GY" et "PK" sont inutiles ici. Acheminez-les vers des bornes potentiellement isolées.

Ne pas les laisser libres dans la boîte de jonction !

Les blindages des deux câbles doivent être reliés. Cela se fait automatiquement dans le cas de la boîte de jonction câble à câble via le contact du blindage dans les presse-étoupe.

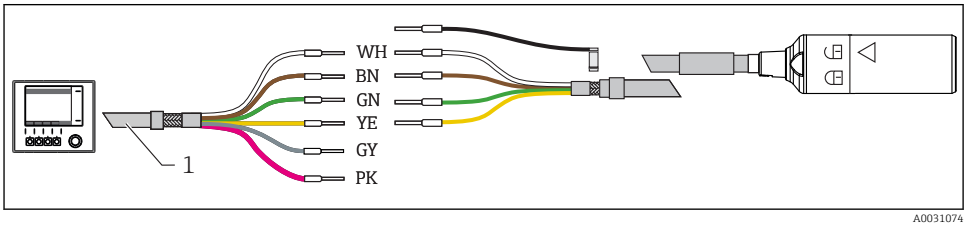

9 *Raccordement électrique, CYK11 pour prolonger le CYK10*

1 CYK11

6.2.4 CYK11 avec extrémité préconfectionnée et douille M12

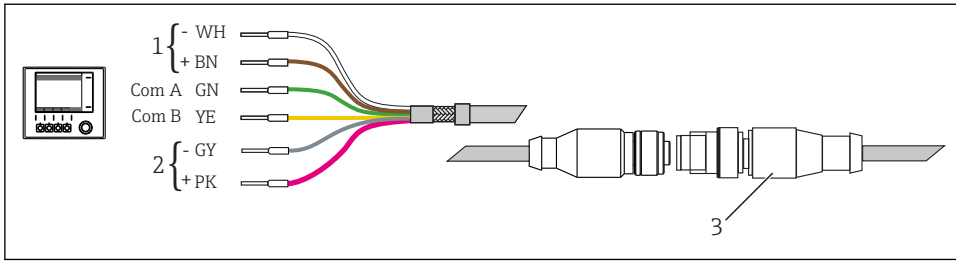

10 *Raccordement électrique, CYK11 avec extrémité préconfectionnée et connecteur M12*

1 *Capteur Memosens*
2 *Capteur à câble surmoulé*
3 *Capteur Memosens via CYK10 avec connecteur M12 / capteur à câble surmoulé*

6.2.5 CYK11 avec connecteur M12 et douille M12

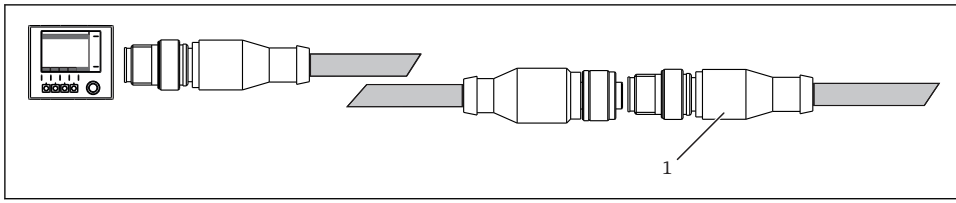

11 *Raccordement électrique, CYK11 avec connecteur M12 et douille M12*

1 *Capteur à câble surmoulé / capteur Memosens via CYK10 avec M12*

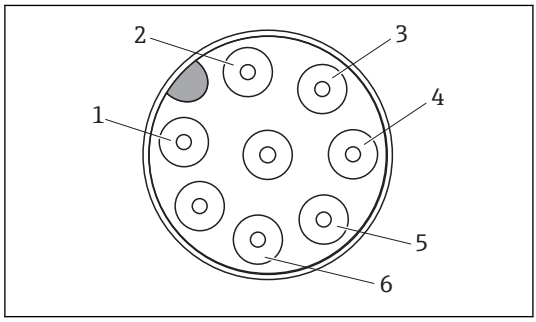

1 $V_{Capteur\ câble\ surmoulé}$ *(+24 V) (PK)*
2 $GND_{Capteur\ câble\ surmoulé}$ *(GY)*
3 $V_{Capteur\ Memosens}$ *(BN)*
4 $GND_{Capteur\ Memosens}$ *(WH)*
5 *RS 485 A (GN)*
6 *RS 485 B (YE)*

12 *Occupation des bornes du connecteur M12*

6.3 Câblage de la boîte de jonction CYK11

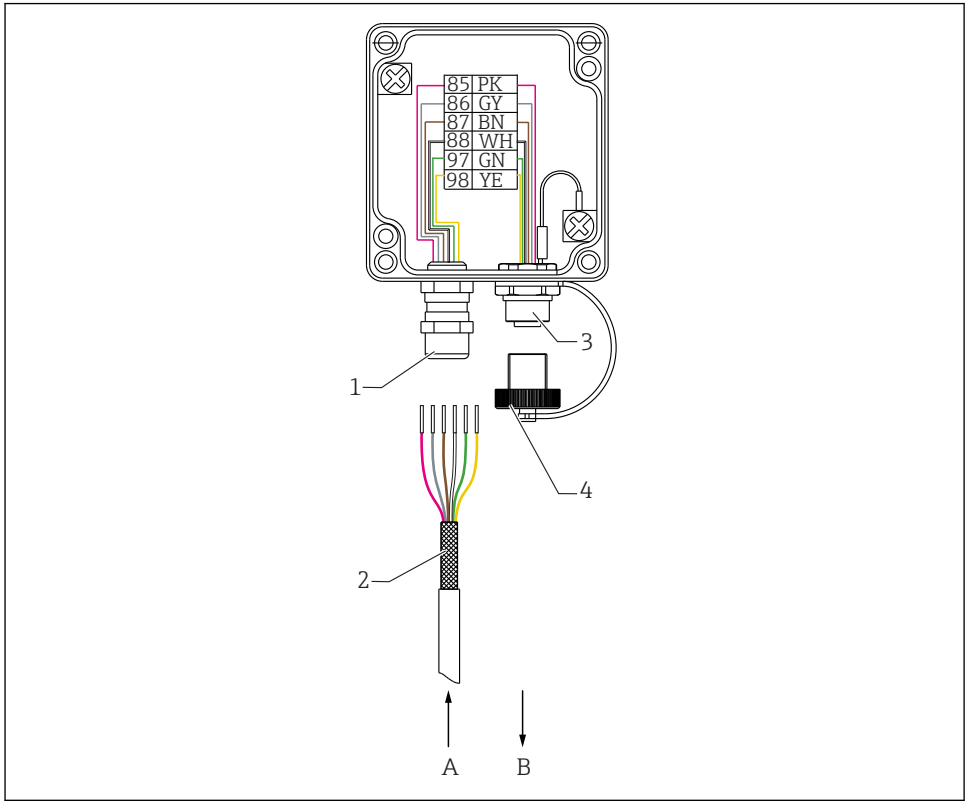

13 *Raccordement électrique de la boîte de jonction CYK11, douille M12/câble*

1 Presse-étoupe - blindage fixé dans le presse-étoupe
2 Blindage
3 Douille M12 intégrée
4 Cache pour la douille d'installation M12
A Transmetteur
B Capteur

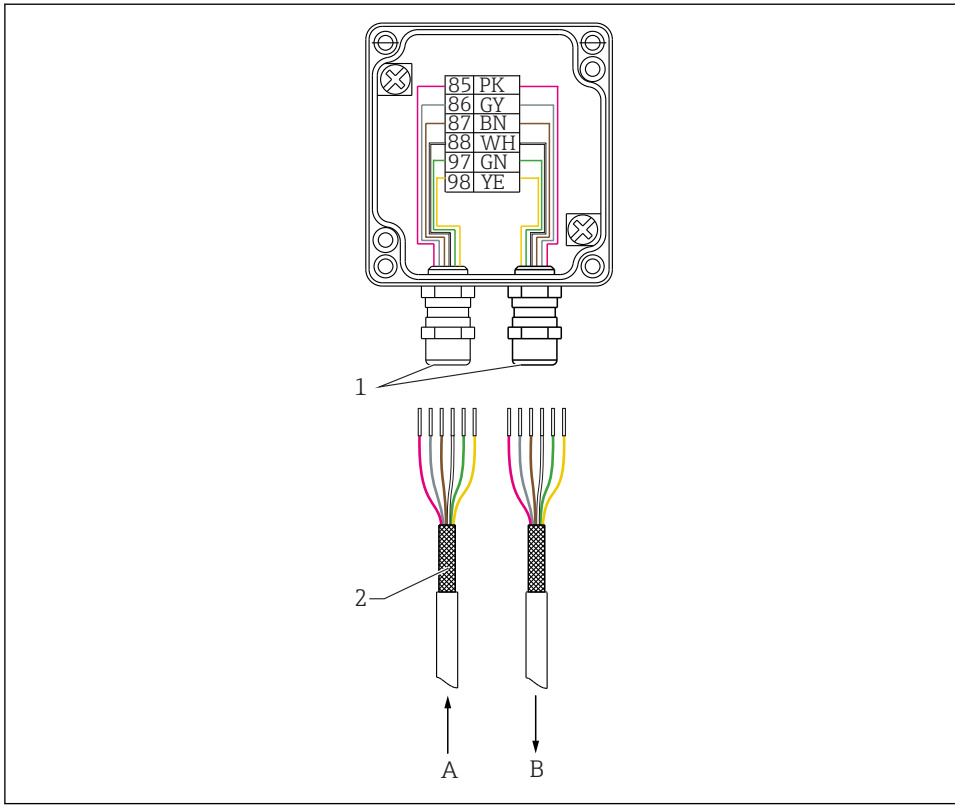

14 Raccordement électrique de la boîte de jonction CYK11, câble/câble

1 Presse-étoupe - blindage fixé dans le presse-étoupe
2 Blindage
A Transmetteur
B Capteur

Montage des presse-étoupe

1. Insérez le câble de raccordement dans le presse-étoupe jusqu'à ce que la gaine soit en contact avec le ressort de contact interne.
2. Serrez le presse-étoupe (max. 3 Nm).
3. Connectez les fils des câbles.

7 Accessoires

Vous trouverez ci-dessous les principaux accessoires disponibles à la date d'édition de la présente documentation. Pour les accessoires non mentionnés ici, adressez-vous à notre SAV ou agence commerciale.

Boîte de jonction, douille M12/câble
- Matériau : aluminium, laqué
- Prolongateur de câble : capteurs Memosens, Liquiline
- Référence : 71145498

Boîte de jonction, câble/câble
- Matériau : aluminium, laqué
- Prolongateur de câble : capteurs Memosens, Liquiline
- Référence : 71145499

www.addresses.endress.com

Endress+Hauser

People for Process Automation

ENDRESS + HAUSER – LEVEL TRANSMITTERS

BA00380P/00/EN/18.18
71397579
2018-03-01

Valid as of version
01.00.zz

Operating Instructions
Waterpilot FMX21

Hydrostatic level measurement
4 to 20 mA HART

HART COMMUNICATION PROTOCOL

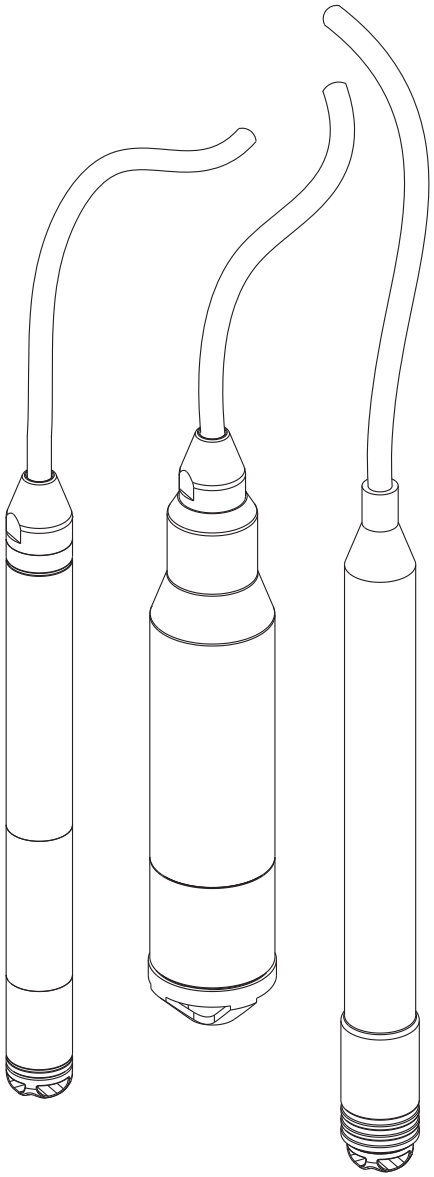

Endress+Hauser
People for Process Automation

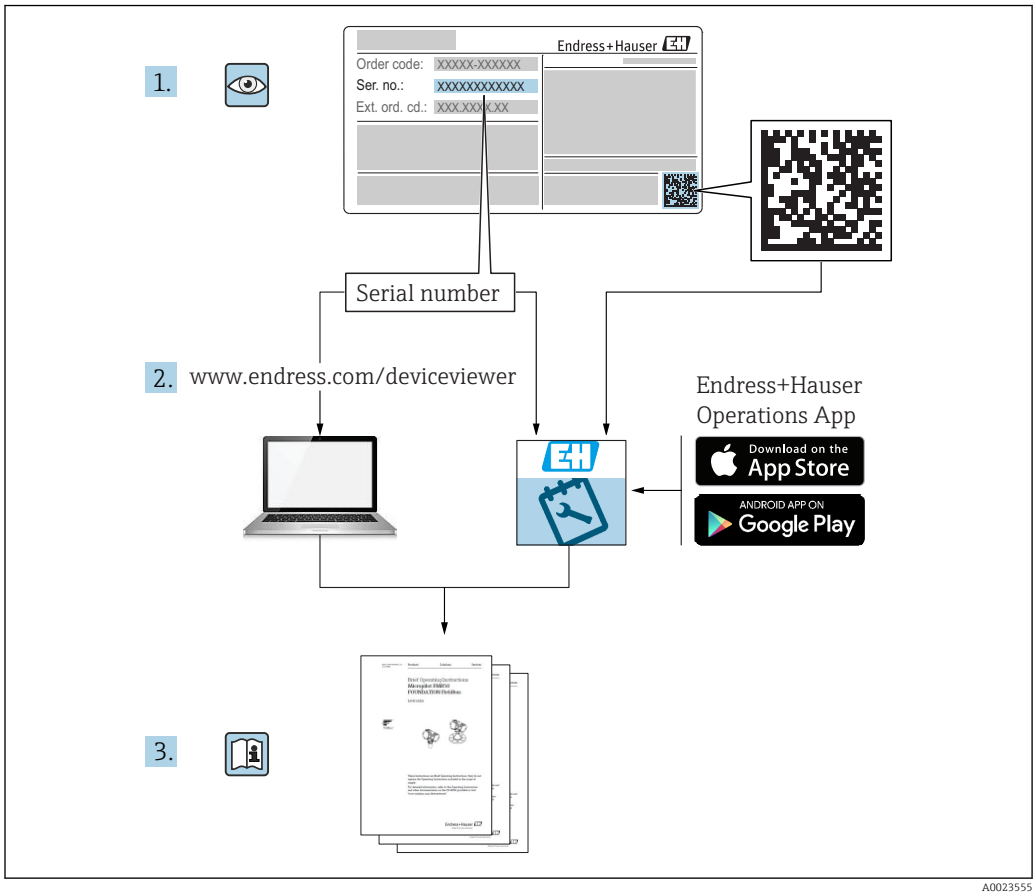

- Make sure the document is stored in a safe place such that it is always available when working on or with the device.
- To avoid danger to individuals or the facility, read the "Basic safety instructions" section carefully, as well as all other safety instructions in the document that are specific to working procedures.
- The manufacturer reserves the right to modify technical data without prior notice. Your Endress+Hauser distributor will supply you with current information and updates to these Instructions.

Table of contents

1 About this document 5
1.1 Document function 5
1.2 Symbols used 5
1.3 Registered trademarks 6
1.4 Supplementary documentation 7
1.5 Terms and abbreviations 8
1.6 Turn down calculation 9

2 Basic safety instructions 10
2.1 Requirements concerning the staff 10
2.2 Designated use 10
2.3 Workplace safety 10
2.4 Operational safety 10
2.5 Product safety 11

3 Product description 12
3.1 Function 12

4 Incoming acceptance and product identification 13
4.1 Incoming acceptance 13
4.2 Product identification 14
4.3 Nameplates 15
4.4 Identification of sensor type 16
4.5 Storage and transport 16
4.6 Scope of delivery 17

5 Installation 18
5.1 Installation conditions 18
5.2 Additional mounting instructions 19
5.3 Dimensions 19
5.4 Mounting the Waterpilot with a mounting clamp 20
5.5 Mounting the Waterpilot with a cable mounting screw 21
5.6 Mounting the terminal box 22
5.7 Mounting the TMT182 temperature head transmitter with terminal box 22
5.8 Mounting the terminal strip for the Pt100 passive (without TMT182) 23
5.9 Inserting the cable into the RIA15 field housing 24
5.10 Cable marking 24
5.11 Cable shortening kit 25
5.12 Post-installation check 25

6 Electrical connection 26
6.1 Connecting the device 26
6.2 Supply voltage 30
6.3 Cable specifications 30
6.4 Power consumption 30
6.5 Current consumption 31
6.6 Connecting the measuring unit 31
6.7 Post-connection check 35

7 Operation options 36
7.1 Overview of operating options 36
7.2 Operating concept 37
7.3 Structure of the operating menu 38
7.4 Locking/unlocking operation 38
7.5 Resetting to factory settings (reset) 39

8 Integrating device via HART® protocol 41
8.1 HART process variables and measured values 41
8.2 Device variables and measured values 42

9 Commissioning 43
9.1 Post-installation check and function check . . . 43
9.2 Unlocking/locking configuration 43
9.3 Commissioning 43
9.4 Measuring mode selection 43
9.5 For selecting the pressure engineering unit . . . 44
9.6 Position adjustment 44
9.7 Configuring the damping 45
9.8 Configuring pressure measurement 46
9.9 Configuring level measurement 48
9.10 Automatic density compensation 59
9.11 Linearization 62
9.12 Manual entry of a linearization table via operating tool 65
9.13 Backing up or duplicating the device data 66
9.14 Operation and settings via RIA15 66

10 Diagnostics and troubleshooting . . . 70
10.1 Troubleshooting 70
10.2 Diagnostic events in the operating tool 70
10.3 Troubleshooting specific to Waterpilot FMX21 with optional Pt100 74
10.4 Troubleshooting specific to TMT182 temperature head transmitter 74
10.5 Response of output to errors 75
10.6 Firmware history 75

11 Maintenance 76
11.1 Exterior cleaning 76

12 Repairs 77
12.1 General notes 77
12.2 Spare parts 77
12.3 Return 77

12.4 Disposal 77

13 Overview of the operating menu 78

13.1 Overview of parameters in the "Expert" menu 81

14 Description of device parameters . . . 86

14.1 Expert → System 86
14.2 Expert → System → Instrument info 87
14.3 Expert → System → Management 89
14.4 Expert → Measurement → Measuring mode . . 89
14.5 Expert → Measurement → Basic setup 90
14.6 Expert → Measurement → Pressure 92
14.7 Expert → Measurement → Level 94
14.8 Expert → Measurement → Linearization 99
14.9 Expert → Measurement → Sensor limits 102
14.10 Expert → Measurement → Sensor trim 103
14.11 Expert → Output → Current output 104
14.12 Expert→ Communication → HART config. . . . 108
14.13 Expert→ Communication → HART info 110
14.14 Expert→ Communication → HART output . . . 112
14.15 Expert→ Communication → HART input 115
14.16 Expert → Application 117
14.17 Expert → Diagnosis 118
14.18 Expert → Diagnosis → Diagnostic list 120
14.19 Expert → Diagnosis→ Event logbook 121
14.20 Expert → Diagnosis → Simulation 122

15 Accessories 124

15.1 Service-specific accessories 125

16 Technical data 126

16.1 Input 126
16.2 Output 129
16.3 Performance characteristics 132
16.4 Environment 134
16.5 Process 136
16.6 Additional technical data 137

Index 138

1 About this document

1.1 Document function

These Operating Instructions contain all the information that is required in various phases of the life cycle of the device: from product identification, incoming acceptance and storage, to mounting, connection, operation and commissioning through to troubleshooting, maintenance and disposal.

1.2 Symbols used

1.2.1 Safety symbols

Symbol	Meaning
DANGER	**DANGER!** This symbol alerts you to a dangerous situation. Failure to avoid this situation will result in serious or fatal injury.
WARNING	**WARNING!** This symbol alerts you to a dangerous situation. Failure to avoid this situation can result in serious or fatal injury.
CAUTION	**CAUTION!** This symbol alerts you to a dangerous situation. Failure to avoid this situation can result in minor or medium injury.
NOTICE	**NOTE!** This symbol contains information on procedures and other facts which do not result in personal injury.

1.2.2 Electrical symbols

Symbol	Meaning	Symbol	Meaning
⎓	Direct current	~	Alternating current
⎓ ~	Direct current and alternating current	⏚	**Ground connection** A grounded terminal which, as far as the operator is concerned, is grounded via a grounding system.
⏚	**Protective ground connection** A terminal which must be connected to ground prior to establishing any other connections.	⏚	**Equipotential connection** A connection that has to be connected to the plant grounding system: This may be a potential equalization line or a star grounding system depending on national or company codes of practice.

1.2.3 Tool symbols

Symbol	Meaning
 A0011220	Flat blade screwdriver
 A0011219	Phillips screwdriver

Symbol	Meaning
A0011221	Allen key
A0011222	Open-ended wrench

1.2.4 Symbols for certain types of information

Symbol	Meaning
	Permitted Procedures, processes or actions that are permitted.
	Preferred Procedures, processes or actions that are preferred.
	Forbidden Procedures, processes or actions that are forbidden.
	Tip Indicates additional information.
	Reference to documentation
	Reference to page
	Reference to graphic
1. , 2. , 3. ...	Series of steps
	Result of a step
	Help in the event of a problem
	Visual inspection

1.2.5 Symbols in graphics

Symbol	Meaning
1, 2, 3 ...	Item numbers
1. , 2. , 3. ...	Series of steps
A, B, C, ...	Views
A-A, B-B, C-C, ...	Sections

1.3 Registered trademarks

1.3.1 GORE-TEX®

Trademark of W.L. Gore & Associates, Inc., USA.

1.3.2 TEFLON®

Trademark of E.I. Du Pont de Nemours & Co., Wilmington, USA.

1.3.3 HART®

Registered trademark of the FieldComm Group, Austin, USA

1.3.4 FieldCare®

Trademark of Endress+Hauser Process Solutions AG.

1.3.5 DeviceCare®

Trademark of Endress+Hauser Process Solutions AG.

1.3.6 iTEMP®

Trademark of Endress+Hauser Wetzer GmbH + Co. KG, Nesselwang, D..

1.4 Supplementary documentation

The document types listed are available:
In the Download Area of the Endress+Hauser Internet site: www.endress.com → Download

1.4.1 Technical Information (TI): planning aid for your device

Waterpilot: TI00431P

RIA15: TI01043K

The document contains all the technical data on the device and provides an overview of the accessories and other products that can be ordered for the device.

1.4.2 Brief Operating Instructions (KA): getting the 1st measured value quickly

FMX21 4 to 20 mA HART - KA01189P:

The Brief Operating Instructions contain all the essential information from incoming acceptance to initial commissioning.

1.4.3 Safety Instructions (XA)

Depending on the approval, the following Safety Instructions (XA) are supplied with the device. They are an integral part of the Operating Instructions.

Directive	Type of protection	Category	Documentation	Option [1]
ATEX	Ex ia IIC	II 2 G	XA00454P	BD
ATEX	Ex nA IIC	II 3 G	XA00485P	BE
IECEx	Ex ia IIC	n/a	XA00455P	IC
CSA C/US	Ex ia IIC	n/a	ZD00232P (960008976)	CE
FM	AEx ia IIC	n/a	ZD00231P (960008975)	FE

Directive	Type of protection	Category	Documentation	Option [1]
NEPSI	Ex ia IIC	n/a	XA00456P	NA
INMETRO	Ex ia IIC	n/a	XA01066P	MA

1) Product Configurator order code for "Approval"

The nameplate indicates the Safety Instructions (XA) that are relevant to the device.

1.5 Terms and abbreviations

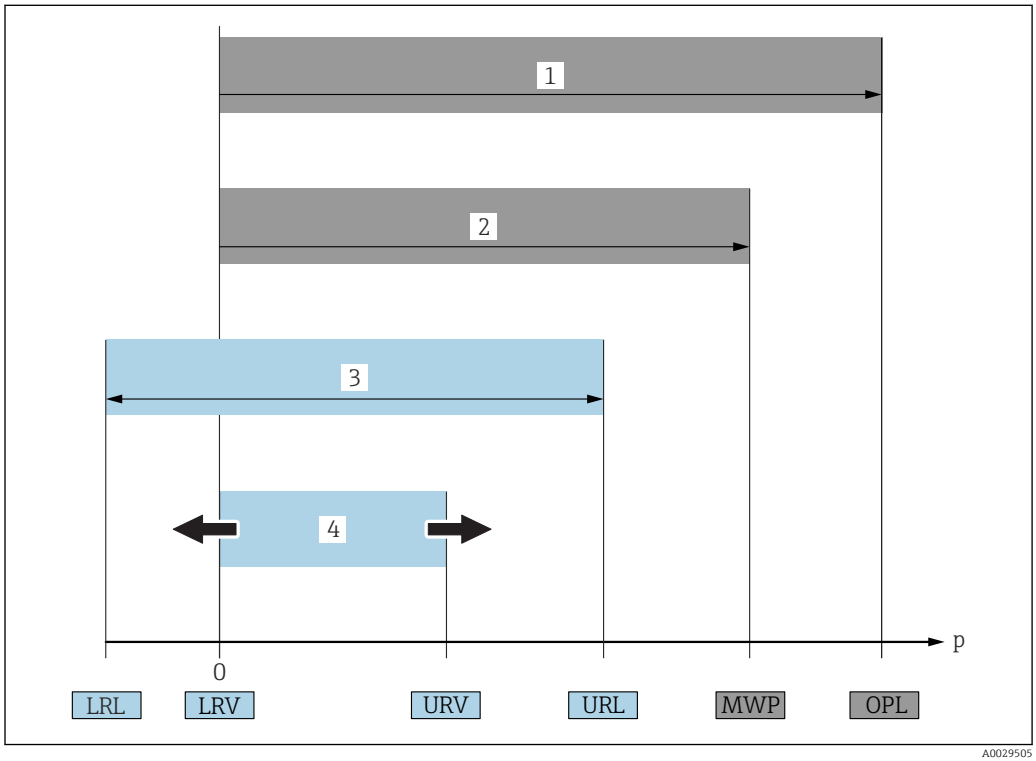

Item	Term/abbreviation	Explanation
1	OPL	The OPL (over pressure limit = sensor overload limit) for the measuring device depends on the lowest-rated element, with regard to pressure, of the selected components, i.e. the process connection has to be taken into consideration in addition to the measuring cell. Also observe pressure-temperature dependency. The OPL may only be applied for a limited period of time.
2	MWP	The MWP (maximum working pressure) for the sensors depends on the lowest-rated element, with regard to pressure, of the selected components, i.e. the process connection has to be taken into consideration in addition to the measuring cell. Also observe pressure-temperature dependency. The MWP may be applied at the device for an unlimited period. The MWP can also be found on the nameplate.
3	Maximum sensor measuring range	Span between LRL and URL This sensor measuring range is equivalent to the maximum calibratable/adjustable span.
4	Calibrated/adjusted span	Span between LRV and URV Factory setting: 0 to URL Other calibrated spans can be ordered as customized spans.
p	-	Pressure
-	LRL	Lower range limit
-	URL	Upper range limit
-	LRV	Lower range value

Item	Term/abbreviation	Explanation
-	URV	Upper range value
-	TD (turn down)	Turn down Example - see the following section.
-	PE	Polyethylene
-	FEP	Fluorinated ethylene propylene
-	PUR	Polyurethane

1.6 Turn down calculation

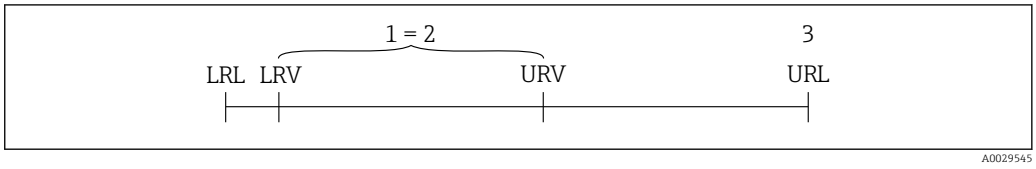

1 Calibrated/adjusted span
2 Zero point-based span
3 URL sensor

Example

- Sensor:10 bar (150 psi)
- Upper range value (URL) = 10 bar (150 psi)

Turn down (TD):

- Calibrated/adjusted span: 0 to 5 bar (0 to 75 psi)
- Lower range value (LRV) = 0 bar (0 psi)
- Upper range value (URV) = 5 bar (75 psi)

$$TD = \frac{URL}{|URV - LRV|}$$

$$TD = \frac{10\ bar\ (150\ psi)}{|5\ bar\ (75\ psi) - 0\ bar\ (0\ psi)|} = 2$$

In this example, the TD is 2:1.
This span is based on the zero point.

2 Basic safety instructions

2.1 Requirements concerning the staff

The personnel for installation, commissioning, diagnostics and maintenance must fulfill the following requirements:
- Trained, qualified specialists: must have a relevant qualification for this specific function and task
- Are authorized by the plant owner/operator
- Are familiar with federal/national regulations
- Before beginning work, the specialist staff must have read and understood the instructions in the Operating Instructions and supplementary documentation as well as in the certificates (depending on the application)
- Following instructions and basic conditions

The operating personnel must fulfill the following requirements:
- Being instructed and authorized according to the requirements of the task by the facility's owner-operator
- Following the instructions in these Operating Instructions

2.2 Designated use

2.2.1 Application and media

The Waterpilot FMX21 is a hydrostatic pressure sensor for measuring the level of fresh water, wastewater and salt water. The temperature is measured simultaneously in the case of sensor versions with a Pt100 resistance thermometer.

An optional temperature head transmitter converts the Pt100 signal to a 4 to 20 mA signal with superimposed digital communication protocol HART 6.0.

2.2.2 Incorrect use

The manufacturer is not liable for damage caused by improper or non-designated use.

Verification for borderline cases:
- For special fluids and fluids for cleaning, Endress+Hauser is glad to provide assistance in verifying the corrosion resistance of fluid-wetted materials, but does not accept any warranty or liability.

2.3 Workplace safety

For work on and with the device:
- Wear the required personal protective equipment according to federal/national regulations.
- Switch off the supply voltage before connecting the device.

2.4 Operational safety

Risk of injury!
- Operate the device in proper technical condition and fail-safe condition only.
- The operator is responsible for interference-free operation of the device.

Modifications to the device

Unauthorized modifications to the device are not permitted and can lead to unforeseeable dangers.
- If, despite this, modifications are required, consult with Endress+Hauser.

Repairs

To ensure continued operational safety and reliability,
- Carry out repairs on the device only if they are expressly permitted.
- Observe federal/national regulations pertaining to repair of an electrical device.
- Use original spare parts and accessories from Endress+Hauser only.

Hazardous area

To eliminate danger to persons or the facility when the device is used in the approval-related area (e.g. explosion protection, pressure vessel safety):
- Check the nameplate to verify if the device ordered can be put to its intended use in the approval-related area.
- Observe the specifications in the separate supplementary documentation that is an integral part of these Instructions.

2.5 Product safety

This measuring device is designed in accordance with good engineering practice to meet state-of-the-art safety requirements, has been tested, and left the factory in a condition in which it is safe to operate.

It meets general safety standards and legal requirements. It also complies with the EC directives listed in the device-specific EC Declaration of Conformity. Endress+Hauser confirms this by affixing the CE mark to the device.

3 Product description

3.1 Function

The ceramic measuring cell is a dry measuring cell i.e. the pressure acts directly on the robust, ceramic process isolating diaphragm of the Waterpilot FMX21. Changes in air pressure are guided via a pressure compensation tube through the extension cable to the rear of the ceramic process isolating diaphragm and are compensated for. A pressure-dependent change in capacitance, caused by the movement of the process isolating diaphragm, is measured at the electrodes of the ceramic carrier. The electronics unit then converts this to a signal that is proportional to the pressure and linear to the level.

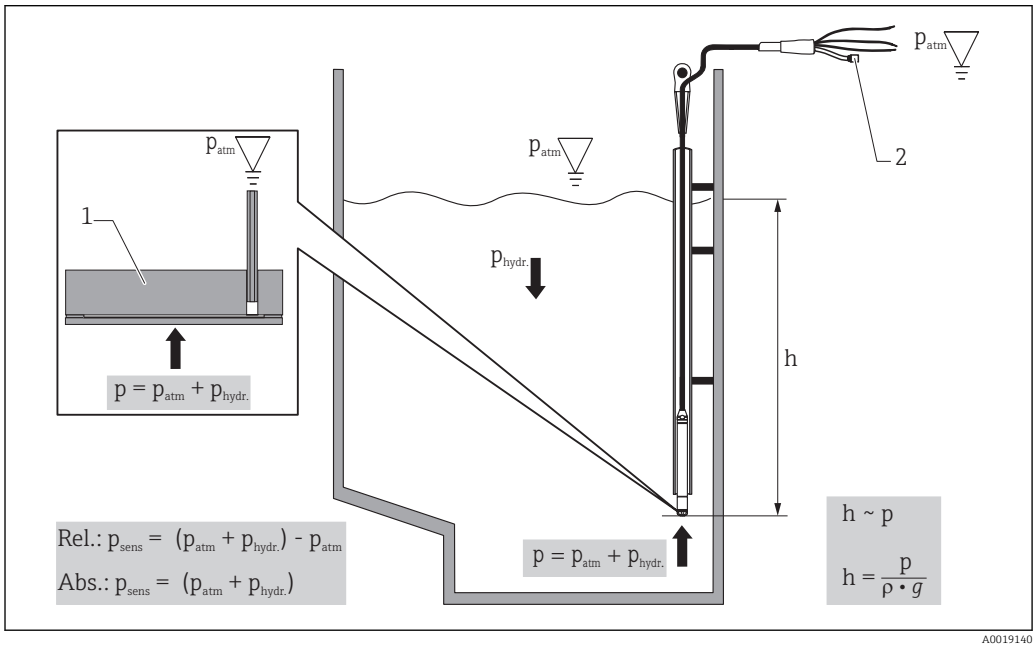

1 *Ceramic measuring cell*
2 *Pressure compensation tube*
h *Height level*
p *Total pressure = atmospheric pressure + hydrostatic pressure*
ρ *Density of the medium*
g *Acceleration due to gravity*
$P_{hydr.}$ *Hydrostatic pressure*
P_{atm} *Atmospheric pressure*
P_{sens} *Pressure displayed on the sensor*

4 Incoming acceptance and product identification

4.1 Incoming acceptance

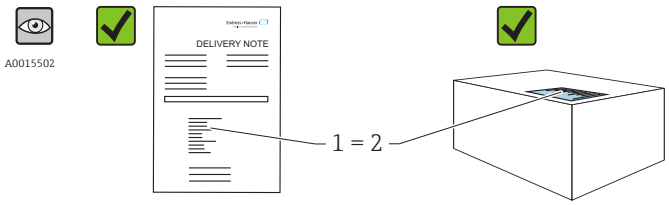

A0016870

Is the order code on the delivery note (1) identical to the order code on the product sticker (2)?

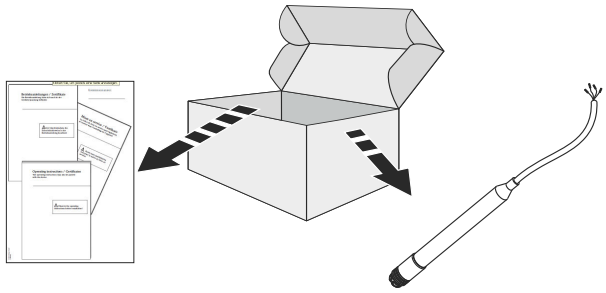

A0026535

A0026536

Are the goods undamaged?

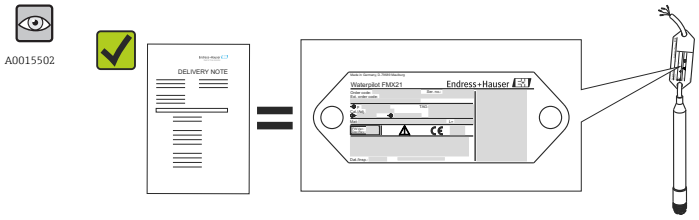

A0026537

Do the data on the nameplate correspond to the order specifications and the delivery note?

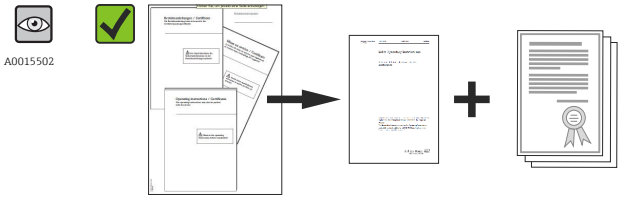

A0015502

A0022106

Is the documentation available?
If required (see nameplate): Are the safety instructions (XA) present?

If one of these conditions does not apply, please contact your Endress+Hauser sales office.

4.2 Product identification

The following options are available for identification of the measuring device:
- Nameplate specifications
- Order code with breakdown of the device features on the delivery note
- Enter serial number of nameplates in *W@M Device Viewer* (www.endress.com/deviceviewer): All details on the measuring device are displayed.

For an overview of the technical documentation provided, enter the serial number from the nameplates in the *W@M Device Viewer* (www.endress.com/deviceviewer)

4.2.1 Manufacturer address

Endress+Hauser SE+Co. KG
Hauptstraße 1
79689 Maulburg, Germany

Address of the manufacturing plant: See nameplate.

4.3 Nameplates

4.3.1 Nameplates on extension cable

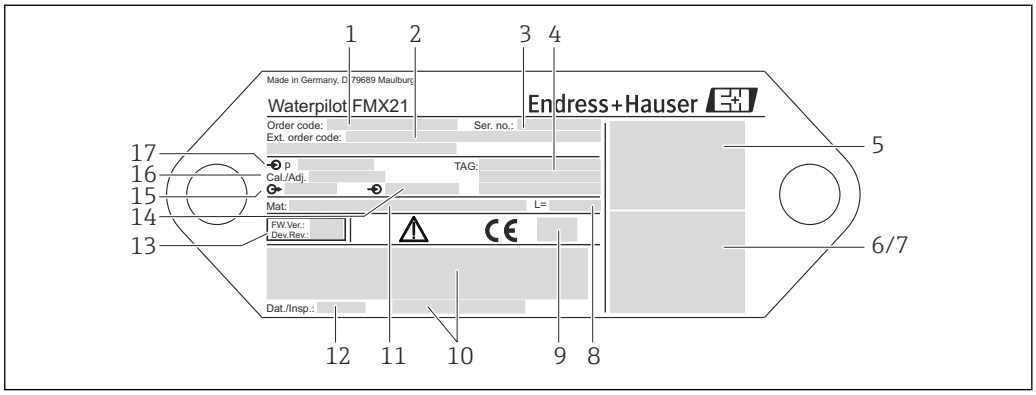

A0018802

1 *Order code (shortened for reordering); The meaning of the individual letters and digits is explained in the order confirmation details.*
2 *Extended order number (complete)*
3 *Serial number (for clear identification)*
4 *TAG (device tag)*
5 *FMX21 connection diagram*
6 *Pt100 connection diagram (optional)*
7 *Warning (hazardous area), (optional)*
8 *Length of extension cable*
9 *Approval symbol, e.g. CSA, FM, ATEX (optional)*
10 *Text for approval (optional)*
11 *Materials in contact with process*
12 *Test date (optional)*
13 *Software version/device version*
14 *Supply voltage*
15 *Output signal*
16 *Set measuring range*
17 *Nominal measuring range*

Additional nameplate for devices with approvals

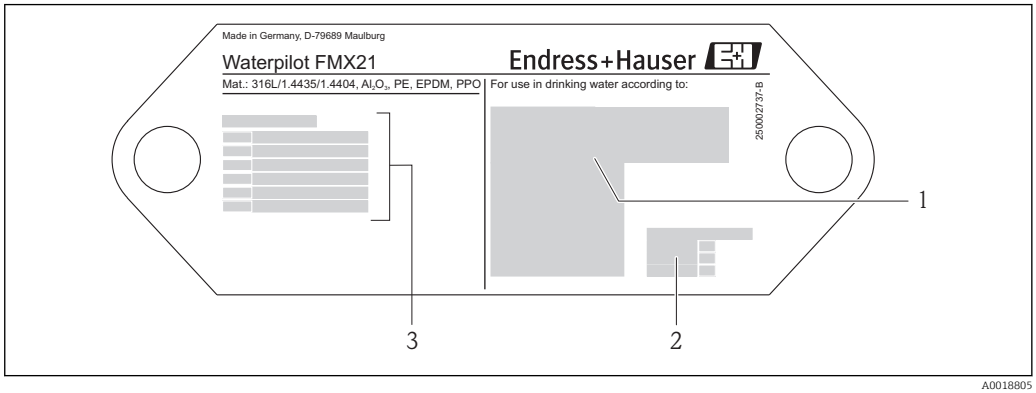

A0018805

1 *Approval symbol (drinking water approval)*
2 *Reference to associated documentation*
3 *Approval number (marine approval)*

4.3.2 Additional nameplate for devices with external diameter 22 mm (0.87 in) and 42 mm (1.65 in)

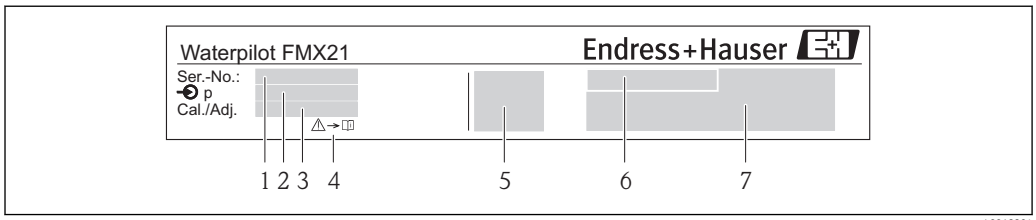

1 *Serial number*
2 *Nominal measuring range*
3 *Set measuring range*
4 *CE mark or approval symbol*
5 *Certificate number (optional)*
6 *Text for approval (optional)*
7 *Reference to documentation*

4.4 Identification of sensor type

With gauge pressure or absolute pressure sensors, the "Pos. zero adjust" parameter is displayed in the operating menu. With absolute pressure sensors, the "Calib. offset" parameter is displayed in the operating menu.

4.5 Storage and transport

4.5.1 Storage conditions

Use original packaging.

Store the measuring device in clean and dry conditions and protect from damage caused by shocks (EN 837-2).

Storage temperature range

FMX21 + Pt100 (optional)

−40 to +80 °C (−40 to +176 °F)

Cable

(when mounted in a fixed position)
- With PE: −30 to +70 °C (−22 to +158 °F)
- With FEP: −30 to +80 °C (−22 to +176 °F)
- With PUR: −40 to +80 °C (−40 to +176 °F)

Terminal box

−40 to +80 °C (−40 to +176 °F)

TMT182 temperature head transmitter (optional) for FMX21 4 to 20 mA HART

−40 to +100 °C (−40 to +212 °F)

4.5.2 Transporting the product to the measuring point

⚠ WARNING

Incorrect transport!

Device or cable may become damaged, and there is a risk of injury!

- ▶ Transport measuring device in the original packaging.
- ▶ Follow the safety instructions and transport conditions for devices weighing more than 18 kg (39.6 lbs).

4.6 Scope of delivery

The scope of delivery comprises:

- Waterpilot FMX21, optionally with integrated Pt100 resistance thermometer
- Optional accessories

Documentation supplied:

- The Operating Instructions BA00380P are available on the internet. → see: www.de.endress.com → Downloads.
- Brief Operating Instructions KA01189P
- Final inspection report
- Drinking water approvals (optional): SD00289P, SD00319P, SD00320P
- Devices that are suitable for use in hazardous areas: Additional documentation e.g. Safety instructions (XA, ZD)

5 Installation

5.1 Installation conditions

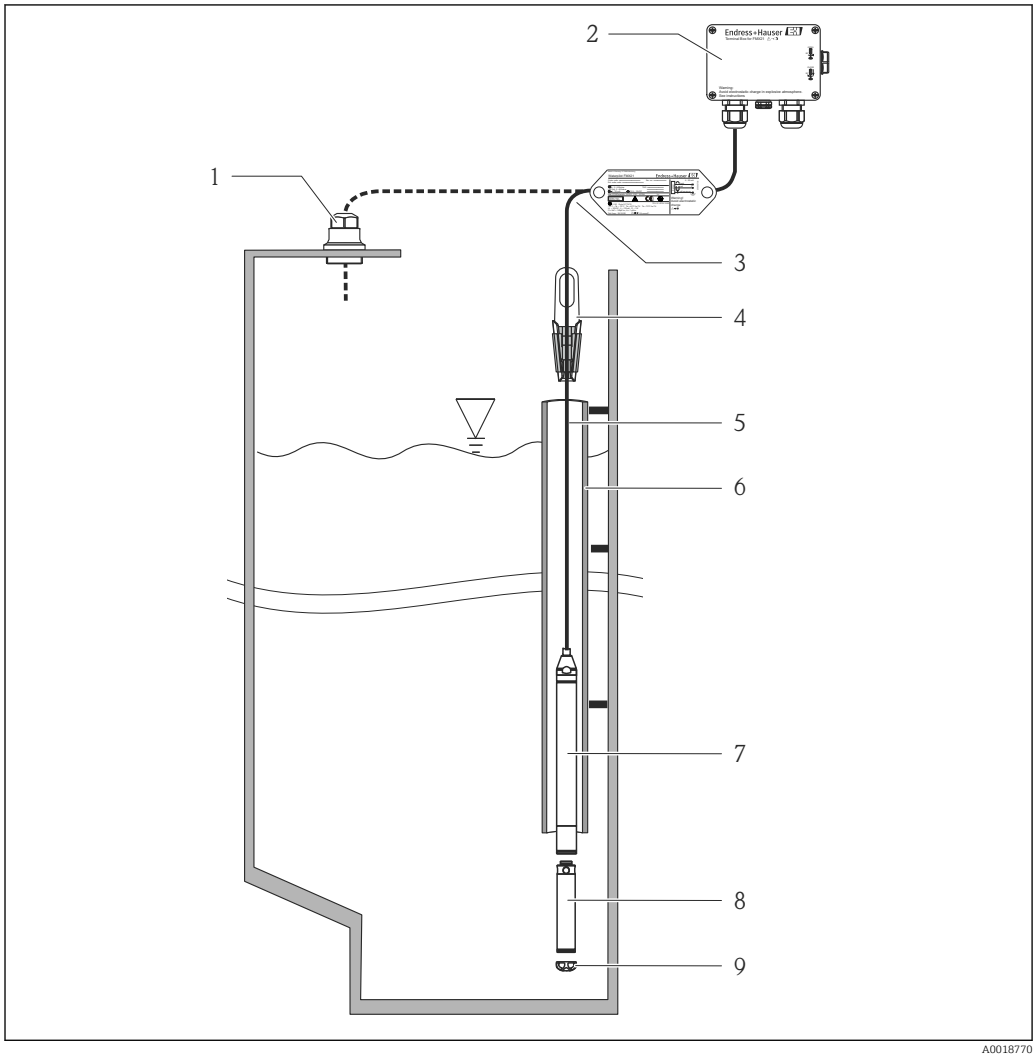

1 *Cable mounting screw (can be ordered as an accessory)*
2 *Terminal box (can be ordered as an accessory)*
3 *Bending radius of extension cable > 120 mm (4.72 in)*
4 *Mounting clamp (can be ordered as an accessory)*
5 *Extension cable*
6 *Guide tube*
7 *Waterpilot FMX21*
8 *Additional weight can be ordered as an accessory for the FMX21 with external diameter of 22 mm (0.87 in) and 29 mm (1.14 in)*
9 *Protection cap*

5.2 Additional mounting instructions

- Cable length
  - Customer-specific in meters or feet.
  - Limited cable length when performing installation with freely suspended device with cable mounting screw or mounting clamp, as well as for FM/CSA approval: max. 300 m (984 ft).
- Sideways movement of the level probe can result in measuring errors. For this reason, install the probe at a point free from flow and turbulence, or use a guide tube. The internal diameter of the guide tube should be at least 1 mm (0.04 in) greater than the external diameter of the selected FMX21.
- To avoid mechanical damage to the measuring cell, the device is equipped with a protection cap.
- The cable must end in a dry room or a suitable terminal box. The terminal box from Endress+Hauser provides humidity and climatic protection and is suitable for installation outdoors → 🖹 124.
- Cable length tolerance: < 5 m (16 ft): ±17.5 mm (0.69 in); > 5 m (16 ft): ±0.2 %
- If the cable is shortened, the filter at the pressure compensation tube must be reattached. Endress+Hauser offers a cable shortening kit for this purpose → 🖹 124 (documentation SD00552P/00/A6).
- Endress+Hauser recommends using twisted, shielded cable.
- In shipbuilding applications, measures are required to restrict the spread of fire along cable looms.
- The length of the extension cable depends on the intended level zero point. The height of the protection cap must be taken into consideration when designing the layout of the measuring point. The level zero point (E) corresponds to the position of the process isolating diaphragm. Level zero point = E; tip of probe = L (see the following diagram).

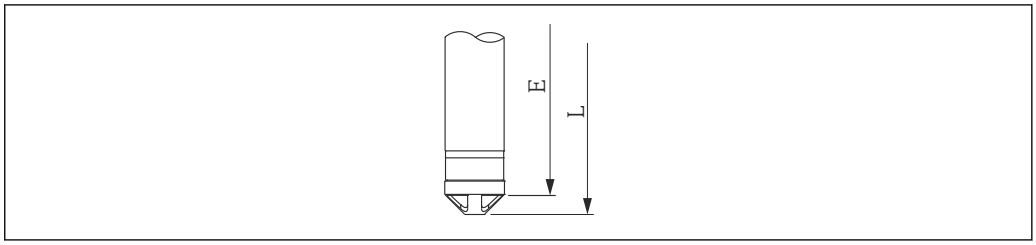

A0026013

5.3 Dimensions

For dimensions, please refer to the Technical Information TI00431P/00/EN, "Mechanical construction" section (see also: www.de.endress.com → Downloads → Media Type: Documentation).

5.4 Mounting the Waterpilot with a mounting clamp

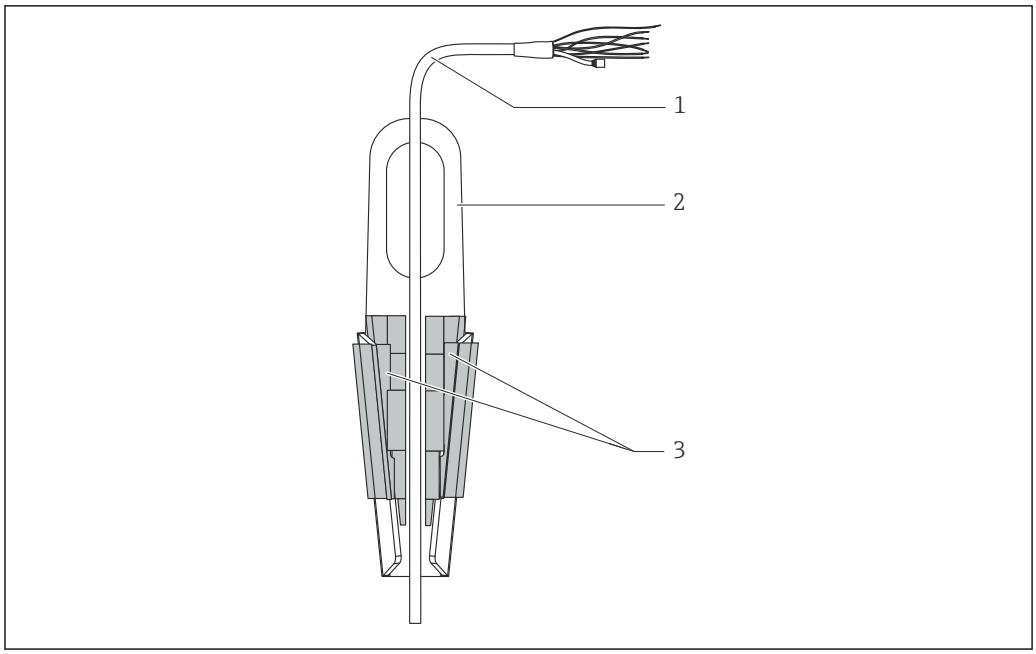

1 Extension cable
2 Suspension clamp
3 Clamping jaws

5.4.1 Mounting the suspension clamp:

1. Mount the suspension clamp (item 2). Take the weight of the extension cable (item 1) and the device into account when selecting the fastening point.
2. Push up the clamping jaws (item 3). Place the extension cable (item 1) between the clamping jaws as shown in the graphic.
3. Hold the extension cable (item 1) in position and push the clamping jaws (item 3) back down. Tap the clamping jaws gently from above to fix them in place.

5.5 Mounting the Waterpilot with a cable mounting screw

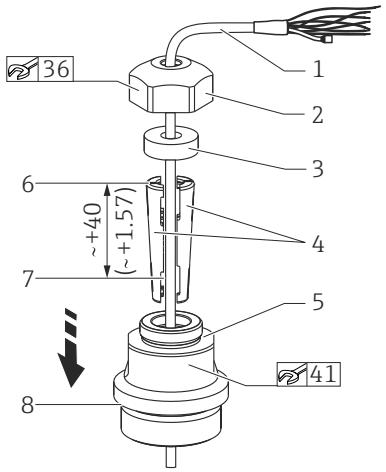

1 *Extension cable*
2 *Cover for cable mounting screw*
3 *Sealing ring*
4 *Clamping sleeves*
5 *Adapter for cable mounting screw*
6 *Top edge of clamping sleeve*
7 *Desired length of extension cable and Waterpilot probe prior to assembly*
8 *After assembly, item 7 is located next to the mounting screw with G 1½" thread: height of sealing surface of the adapter or NPT 1½" thread height of thread run-out of adapter*

Engineering unit mm (in). Illustrated with G 1½" thread.

If you want to lower the level probe to a certain depth, position the top edge of the clamping sleeve 40 mm (4.57 in) higher than the required depth. Then push the extension cable and the clamping sleeve into the adapter as described in Step 6 in the following section.

5.5.1 Mounting the cable mounting screw with a G 1½" or NPT 1½" thread:

1. Mark the desired length of extension cable on the extension cable.
2. Insert the probe through the measuring aperture and carefully lower on the extension cable. Fix the extension cable to prevent it from slipping.
3. Slide the adapter (item 5) over the extension cable and screw it tightly into the measuring aperture.
4. Slide the sealing ring (item 3) and cover (item 2) onto the cable from above. Press the sealing ring into the cover.
5. Place the clamping sleeves (item 4) around the extension cable (item 1) at the marked point as illustrated in the graphic.
6. Slide the extension cable with the clamping sleeves (item 4) into the adapter (item 5)
7. Fit the cover (item 2) with the sealing ring (item 3) onto the adapter (item 5) and securely screw together with the adapter.

To remove the cable mounting screw, perform this sequence of steps in reverse.

⚠ CAUTION

Risk of injury!

▶ Use only in unpressurized vessels.

5.6 Mounting the terminal box

The optional terminal box is mounted using four screws (M4). For the dimensions of the terminal box, please see the Technical Information TI00431P/00/ EN, "Mechanical construction" section (see also: www.de.endress.com → Downloads → Media Type: Documentation).

5.7 Mounting the TMT182 temperature head transmitter with terminal box

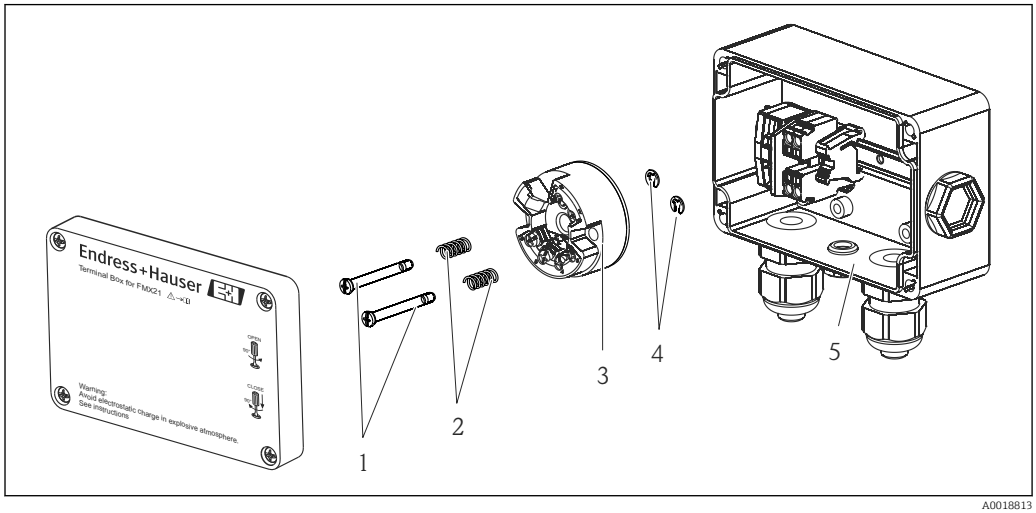

1 *Mounting screws*
2 *Mounting springs*
3 *TMT182 temperature head transmitter*
4 *Circlips*
5 *Terminal box*

Only open the terminal box with a screwdriver.

⚠ WARNING

Risk of explosion!

▶ The TMT182 is not designed for use in hazardous areas.

5.7.1 Mounting the temperature head transmitter:

1. Guide the mounting screws (item 1) with the mounting springs (item 2) through the bore of the temperature head transmitter (item 3)
2. Secure the mounting screws with the circlips (item 4). Circlips, mounting screws and springs are included in the scope of delivery for the temperature head transmitter.
3. Screw the temperature head transmitter into the field housing tightly. (Width of screwdriver blade max. 6 mm (0.24 in))

NOTICE

Avoid damage to the temperature head transmitter.

▶ Do not overtighten the mounting screw.

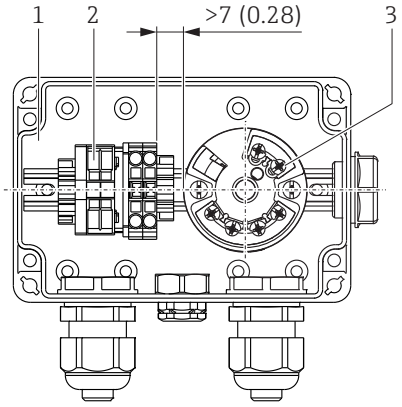

1 Terminal box
2 Terminal strip
3 TMT182 temperature head transmitter

Engineering unit mm (in)

NOTICE

Incorrect connection!

- A distance of >7 mm (> 0.28) must be maintained between the terminal strip and the TMT182 temperature head transmitter.

5.8 Mounting the terminal strip for the Pt100 passive (without TMT182)

If the FMX21 with optional Pt100 is supplied without the optional TMT182 temperature head transmitter, a terminal strip is provided with the terminal box for the purpose of wiring the Pt100.

⚠ WARNING

Risk of explosion!

- The Pt100, as well as the terminal strip, are not designed for use in hazardous areas.

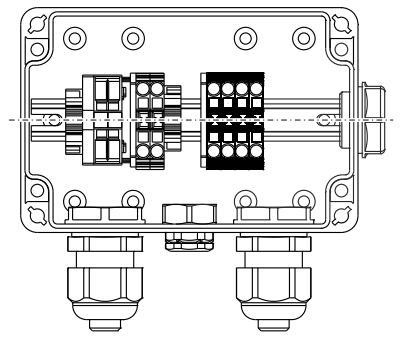

5.9 Inserting the cable into the RIA15 field housing

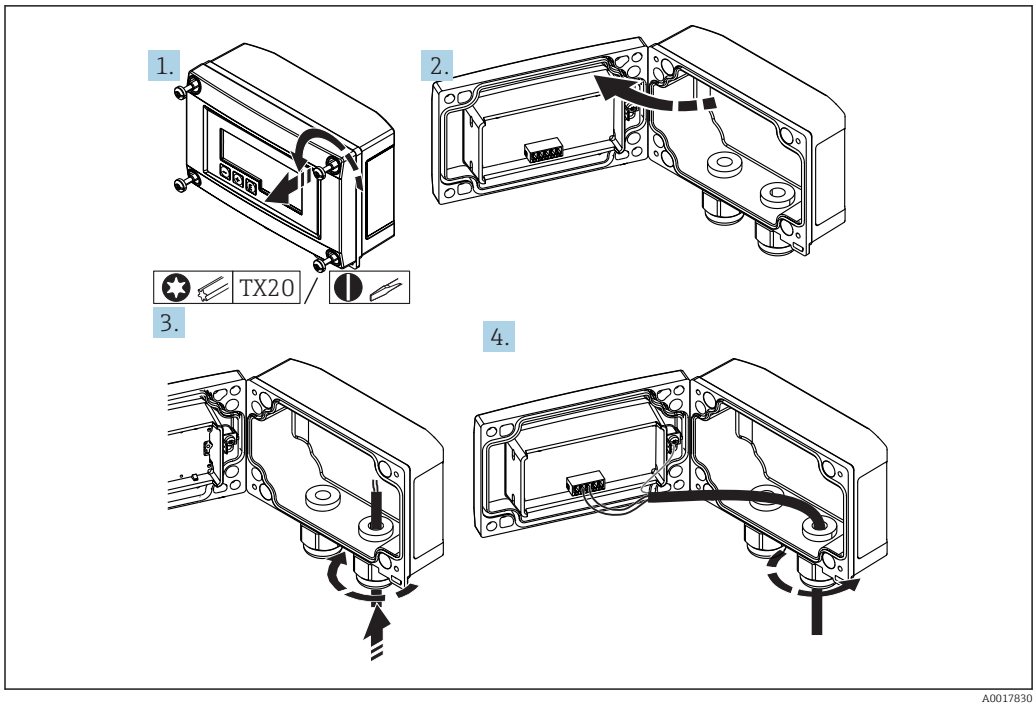

A0017830

Inserting the cable, field housing, connection without transmitter power supply (example)

1. Release the housing screws
2. Open the housing
3. Open the cable gland (M16) and insert the cable
4. Connect the cable including the functional grounding and close the cable gland

Compensation of the atmospheric pressure must be ensured for the installation. A black, vented cable gland is supplied for this purpose.

If using the communication resistor module in the RIA15, the cable of the FMX21 must be inserted into the right gland when connecting the FMX21 so that the integrated pressure compensation tube is not pinched.

5.10 Cable marking

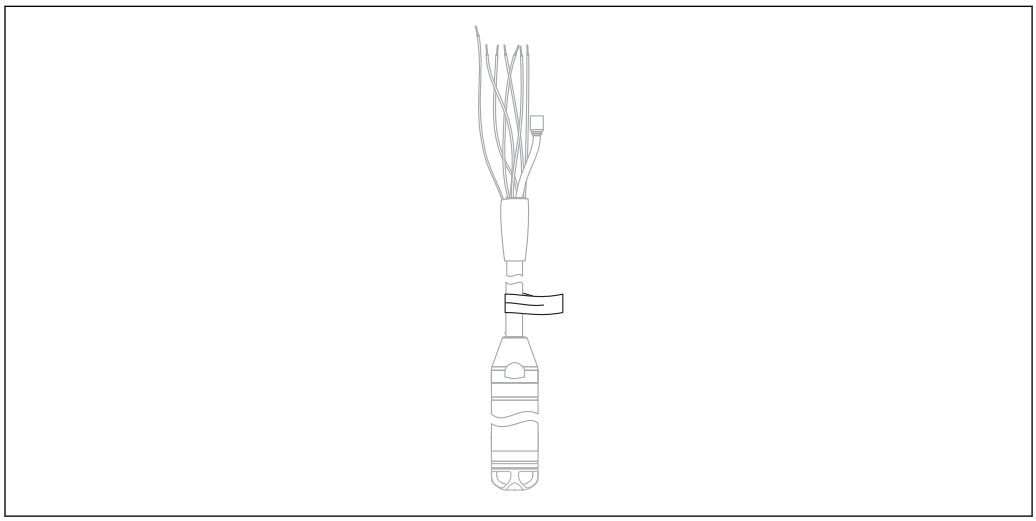

A0030955

- To make installation easier, Endress+Hauser marks the extension cable if a customer-specific length has been ordered.
  Ordering information: Product Configurator order code for "Service", option "IR" or "IS".
- Cable marking tolerance (distance to lower end of level probe):
  Cable length < 5 m (16 ft): ±17.5 mm (0.69 in)
  Cable length > 5 m (16 ft): ±0.2 %
- Material: PET, stick-on label: acrylic
- Immunity to temperature change: −30 to +100 °C (−22 to +212 °F)

NOTICE

The marking is used exclusively for installation purposes.

▶ The mark must be thoroughly removed without trace in the case of devices with drinking water approval. The extension cable must not be damaged in the process.

Not for use of the FMX21 in hazardous areas.

5.11 Cable shortening kit

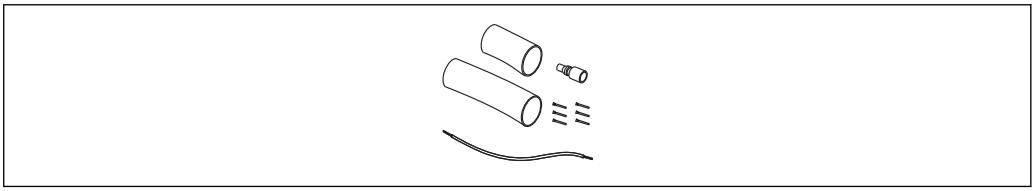

A0030948

The cable shortening kit is used to shorten a cable easily and professionally.

The cable shortening kit is not designed for the FMX21 with FM/CSA approval.

- Ordering information: Product Configurator order code for "Accessories enclosed", option "PW"
- Associated documentation SD00552P/00/A6.

5.12 Post-installation check

❑	Is the device undamaged (visual inspection)?
❑	Does the device conform to the measuring point specifications? For example: ▪ Process temperature ▪ Process pressure ▪ Ambient temperature ▪ Measuring range
❑	Are the measuring point identification and labeling correct (visual inspection)?
❑	Check that all screws are firmly seated.

6 Electrical connection

⚠ WARNING

Electrical safety is compromised by an incorrect connection!

- When using the measuring device in a hazardous area, the relevant national standards and guidelines as well as the Safety Instructions (XAs) or installation or control drawings (ZDs) must be adhered to. All data relating to explosion protection can be found in separate documentation which is available on request. This documentation is supplied with the devices as standard → 🖹 7

6.1 Connecting the device

⚠ WARNING

Electrical safety is compromised by an incorrect connection!

- The supply voltage must match the supply voltage specified on the nameplate → 🖹 15
- Switch off the supply voltage before connecting the device.
- The cable must end in a dry room or a suitable terminal box. The IP66/IP67 terminal box with GORE-TEX® filter from Endress+Hauser is suitable for outdoor installation.→ 🖹 22
- Connect the device in accordance with the following diagrams. Reverse polarity protection is integrated in the Waterpilot FMX21 and the temperature head transmitter. Changing the polarities will not result in the destruction of the devices.
- A suitable circuit breaker should be provided for the device in accordance with IEC/EN 61010.

6.1.1 Waterpilot with Pt100

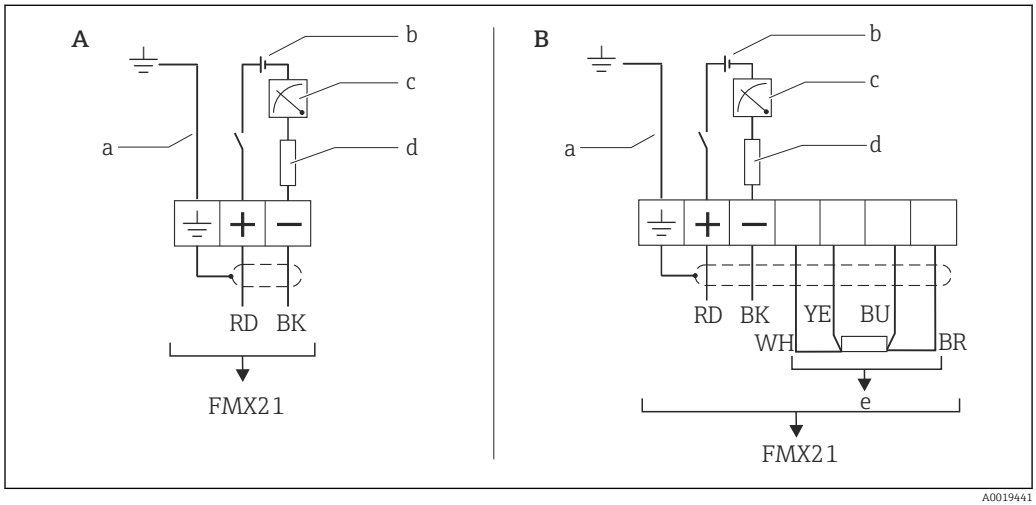

A Waterpilot FMX21
B Waterpilot FMX21 with Pt100 (not for use in hazardous areas); option "NB", Product Configurator order code for "Accessories"
a Not for the FMX21 with external diameter of 29 mm (1.14 in)
b 10.5 to 30 V DC (hazardous area), 10.5 to 35 V DC
c 4...20 mA
d Resistance (R_L)
e Pt100

6.1.2 Waterpilot with Pt100 and TMT182 temperature head transmitter for FMX21 4 to 20 mA HART

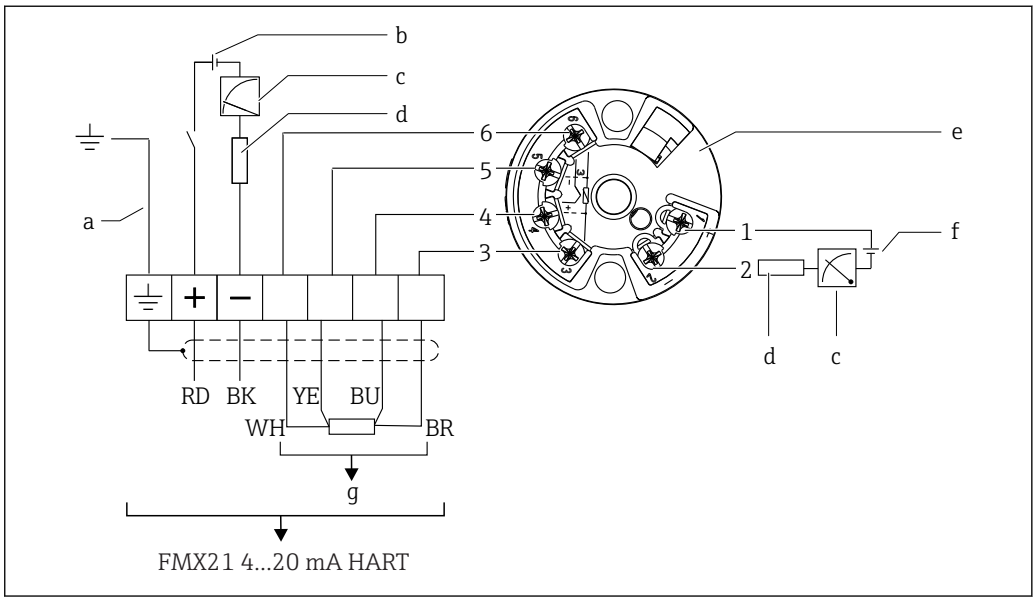

a Not for the FMX21 with external diameter of 29 mm (1.14 in)
b 10.5 to 35 V DC
c 4...20 mA
d Resistance (R_L)
e TMT182 temperature head transmitter (4 to 20 mA) (not for use in hazardous areas)
f 11.5 to 35 V DC
g Pt100
1...6 Pin assignment

Ordering information:

Pt100: Product Configurator order code for "Accessories mounted", option "NB"

TMT182: Product Configurator order code for "Accessories enclosed", option "PT"

6.1.3 Waterpilot FMX21 with RIA15

The RIA15 remote display can be ordered together with the device.

Product structure, feature 620 "Accessory enclosed":
- Option R4 "Remote display RIA15 non-hazardous area, field housing"
- Option R5 "Remote display RIA15 Ex= explosion protection approval, field housing"

Compensation of the atmospheric pressure must be ensured for the installation. A black, vented cable gland is supplied for this purpose.

The RIA15 process display unit is loop-powered and does not require any external power supply.

The voltage drop to be taken into account is:
- ≤1 V in the standard version with 4 to 20 mA communication
- ≤1.9 V with HART communication
- and an additional 2.9 V if display light is used

	Circuit diagram / Description
Waterpilot FMX21 connection, HART communication and RIA15 **without** backlight	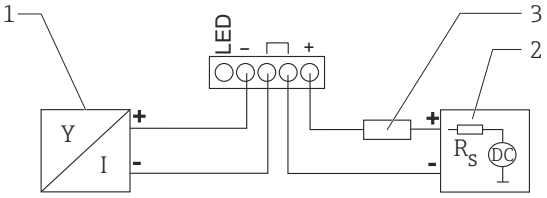 1 *Waterpilot FMX21 block diagram, HART with RIA15 process display unit without light* *1 Waterpilot FMX21* *2 Power supply* *3 HART resistance*
Waterpilot FMX21 connection, HART communication and RIA15 **with** backlight	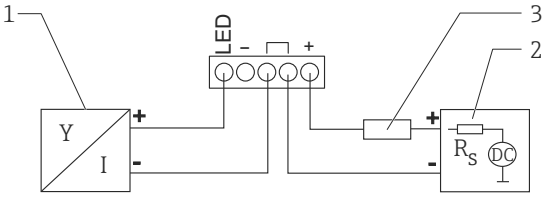 2 *Waterpilot FMX21 block diagram, HART with RIA15 process display unit with light* *1 Waterpilot FMX21* *2 Power supply* *3 HART resistance*

6.1.4 Waterpilot FMX21, RIA15 with installed HART communication resistor module

The HART communication module for installation in the RIA15 can be ordered together with the device.

Product structure, feature 620 "Accessory enclosed":
- Option R6 "HART communication resistor hazardous / non-hazardous area"
- The **voltage drop** to be taken into account is max. **7 V**

Compensation of the atmospheric pressure must be ensured for the installation. A black, vented cable gland is supplied for this purpose.

	Circuit diagram / Description
Waterpilot FMX21 connection and RIA15 **without** backlight	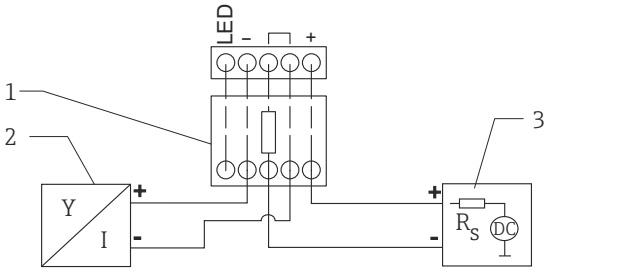 3 *Waterpilot FMX21 block diagram, RIA15 without light, HART communication resistor module* *1 HART communication resistor module* *2 Waterpilot FMX21* *3 Power supply*
Waterpilot FMX21 connection and RIA15 **with** backlight	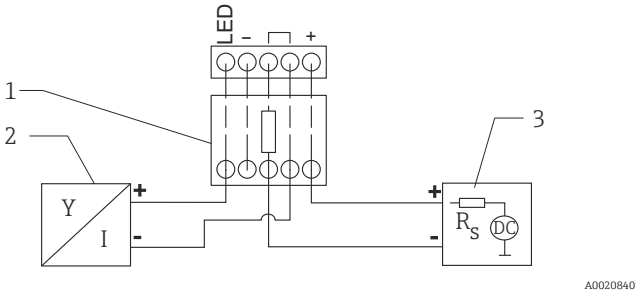 4 *Waterpilot FMX21 block diagram, RIA15 with light, HART communication resistor module* *1 HART communication resistor module* *2 Waterpilot FMX21* *3 Power supply*

6.1.5 Wire colors

RD = red, BK = black, WH = white, YE = yellow, BU = blue, BR = brown

6.1.6 Connection data

Connection classification as per IEC 61010-1:
- Overvoltage category 1
- Pollution level 1

Connection data in the hazardous area

See relevant XA.

6.2 Supply voltage

⚠ WARNING

Supply voltage might be connected!
Risk of electric shock and/or explosion!

- ▶ When using the measuring device in hazardous areas, installation must comply with the corresponding national standards and regulations as well as the Safety Instructions.
- ▶ All explosion protection data are given in separate documentation which is available upon request. The Ex documentation is supplied as standard with all devices approved for use in explosion hazardous areas.

6.2.1 FMX21 + Pt100 (optional)

- 10.5 to 35 V (not hazardous areas)
- 10.5 to 30 V (hazardous areas)

6.2.2 TMT182 temperature head transmitter (optional) for FMX21 4 to 20 mA HART

11.5 to 35 V DC

6.3 Cable specifications

Endress+Hauser recommends using shielded, twisted-pair two-wire cables.

The probe cables are shielded for device versions with outer diameters of 22 mm (0.87 in) and 42 mm (1.65 in).

6.3.1 FMX21 + Pt100 (optional)

- Commercially available instrument cable
- Terminals, terminal box: 0.08 to 2.5 mm^2 (28 to 14 AWG)

6.3.2 TMT182 temperature head transmitter (optional) for FMX21 4 to 20 mA HART

- Commercially available instrument cable
- Terminals, terminal box: 0.08 to 2.5 mm^2 (28 to 14 AWG)
- Transmitter connection: max. 1.75 mm^2 (15 AWG)

6.4 Power consumption

6.4.1 FMX21 + Pt100 (optional)

- ≤ 0.805 W at 35 V DC (non-hazardous area)
- ≤ 0.690 W at 30 V DC (hazardous area)

6.4.2 TMT182 temperature head transmitter (optional) for FMX21 4 to 20 mA HART

≤ 0.805 W at 35 V DC

6.5 Current consumption

6.5.1 FMX21 + Pt100 (optional)

Max. current consumption: ≤ 23 mA
Min. current consumption: ≥ 3.6 mA

6.5.2 TMT182 temperature head transmitter (optional) for FMX21 4 to 20 mA HART

- Max. current consumption: ≤ 23 mA
- Min. current consumption: ≥ 3.5 mA

6.6 Connecting the measuring unit

6.6.1 Overvoltage protection

To protect the Waterpilot and the TMT182 temperature head transmitter from large interference voltage peaks, Endress+Hauser recommends installing overvoltage protection upstream and downstream of the display and/or evaluation unit as shown in the graphic.

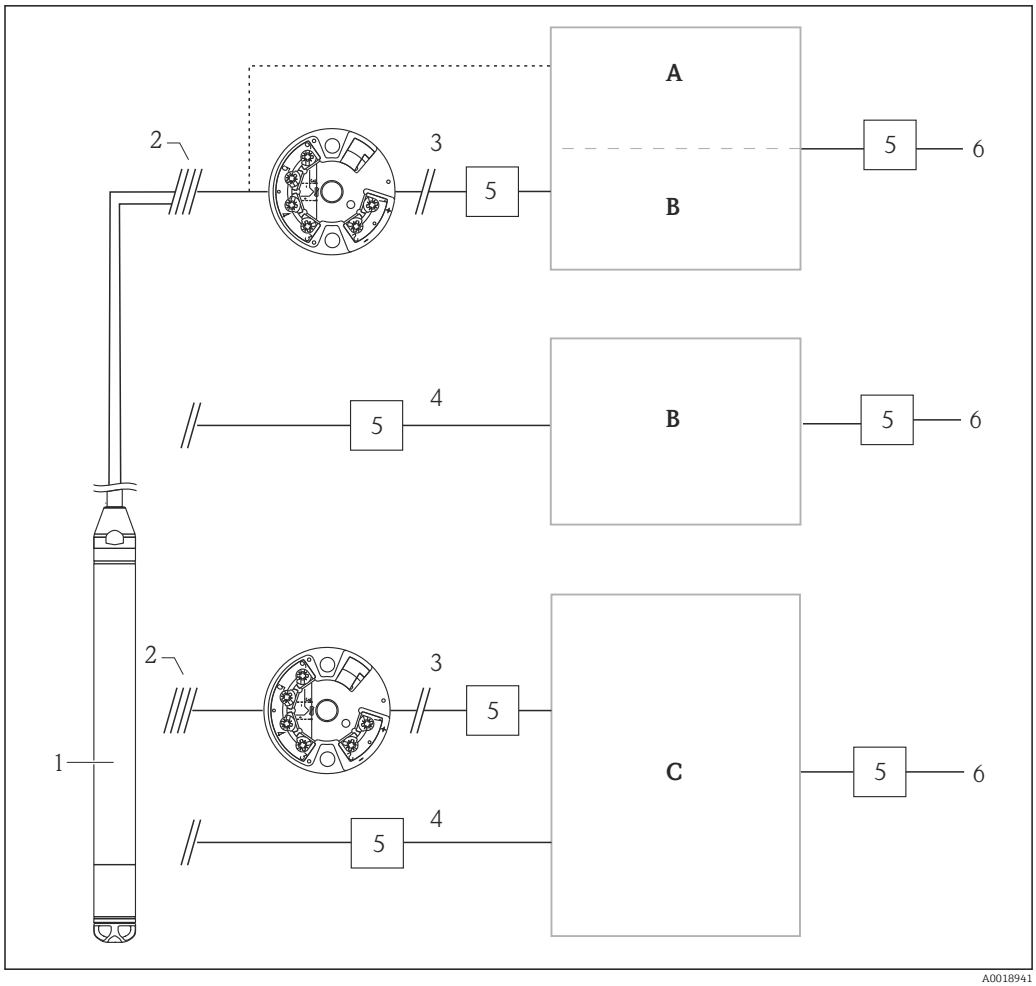

A Power supply, display and evaluation unit with one input for Pt100
B Power supply, display and evaluation unit with one input for 4 to 20 mA
C Power supply, display and evaluation unit with two inputs for 4 to 20 mA
1 Waterpilot FMX21 HART
2 Connection for integrated Pt100 in the FMX21
3 4 to 20 mA HART (temperature)
4 4 to 20 mA HART (level)
5 Overvoltage protection, e.g. HAW from Endress+Hauser (not for use in hazardous areas.)
6 Power supply

Further information on the TMT182 temperature head transmitter for HART applications from Endress+Hauser can be found in the Technical Information TI00078R/09/EN.

6.6.2 Connecting the Commubox FXA195

The Commubox FXA195 connects transmitters with the HART protocol to the USB interface of a computer. This enables remote operation of the transmitter using the Endress+Hauser operating program FieldCare/DeviceCare. Power is supplied to the Commubox via the USB port. The Commubox is also suitable for connecting to intrinsically safe circuits. For further information, see the Technical Information TI00404F/00/EN.

6.6.3 Connecting the Field Xpert SFX

Compact, flexible and robust industrial handheld terminal for remote configuration and for obtaining measured values via the HART current output (4 to 20 mA). For details, see Operating Instructions BA00060S/04/EN.

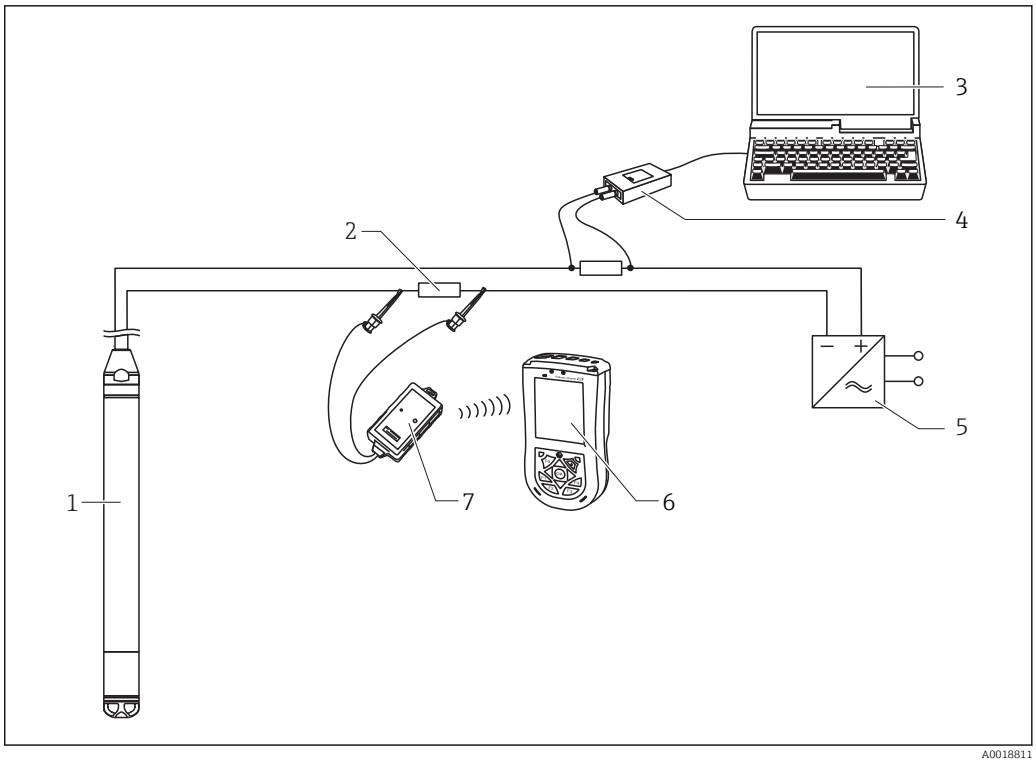

1 *Waterpilot FMX21*
2 *Required communication resistor ≥ 250 Ω*
3 *Computer with operating tool (e.g. FieldCare)*
4 *Commubox FXA195 (USB)*
5 *Transmitter power supply unit, e.g. RN221N (with communication resistor)*
6 *Field Xpert SFX*
7 *VIATOR Bluetooth modem with connecting cable*

Only use certified operating devices in hazardous area!

WARNING

Risk of explosion!

- Do not change the battery of the handheld terminal in the hazardous area.
- When using the measuring device in hazardous areas, installation must comply with the corresponding national standards and regulations and the Safety Instructions (XAs) or the Installation or Control Drawings (ZDs).

6.6.4 Connecting for air pressure compensation with external measured value

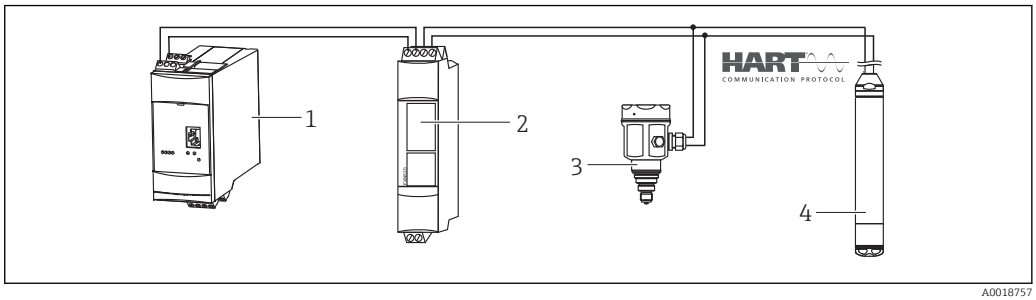

1 *Fieldgate FXA520*
2 *Multidrop Connector FXN520*
3 *Cerabar*
4 *Waterpilot FMX21*

For applications in which condensation may occur, the use of an absolute pressure probe is recommended. For level measurement using an absolute pressure probe, the measured value is affected by fluctuations in the ambient air pressure. To correct the resulting measured error, you can connect an external absolute pressure sensor (e.g. Cerabar) to the HART signal line, switch the Waterpilot to burst mode and operate the Cerabar in the "Electr. Delta P" mode.

When you switch on the "Electr. Delta P" application, the external absolute pressure sensor calculates the difference between the two pressure signals and can thus determine the level precisely. Only one level measured value can be corrected in this way.

For additional information, see → 57.

If using intrinsically safe devices, the regulations which apply to interconnecting intrinsically safe circuits as outlined in IEC 60079-14 (proof of intrinsic safety) must be observed.

6.6.5 Connecting an external temperature sensor/temperature head transmitter for density compensation

The Waterpilot FMX21 can correct measured errors that result from fluctuations in the density of the water caused by temperature. Users can choose from the following options:

Use the internally measured sensor temperature of the FMX21

The internally measured sensor temperature is calculated in the Waterpilot FMX21 for density compensation. The level signal is thus corrected according to the density characteristic line of water.

Use the optional internal Pt100 temperature sensor for density compensation in a suitable HART master (e.g. PLC)

The Waterpilot FMX21 is available with an optional Pt100 temperature sensor. Endress +Hauser additionally offers the TMT182 temperature head transmitter to convert the Pt100 signal to a 4 to 20 mA HART signal. The temperature and pressure signal is queried by a HART master (e.g. PLC), where a corrected level value can be generated using a stored linearization table or density function (of a chosen medium).

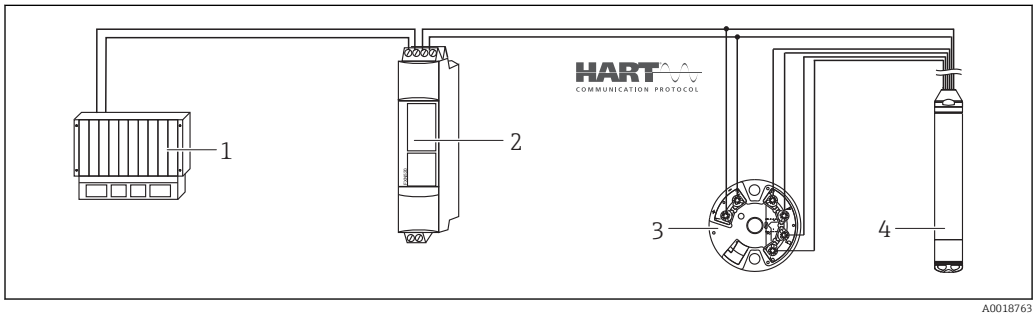

1 HART master, e.g. PLC (programmable logic controller)
2 Multidrop Connector FXN520
3 TMT182 temperature head transmitter
4 Waterpilot FMX21

Use an external temperature signal which is transmitted to the FMX21 via HART burst mode

The Waterpilot FMX21 is available with an optional Pt100 temperature sensor. With this option, the signal of the Pt100 is evaluated with a HART-compliant temperature head transmitter (min. HART 5.0) that supports the burst mode. The temperature signal can

thus be transmitted to the FMX21. The FMX21 uses this signal for density correction of the level signal.

The TMT182 temperature head transmitter is not suitable for this configuration.

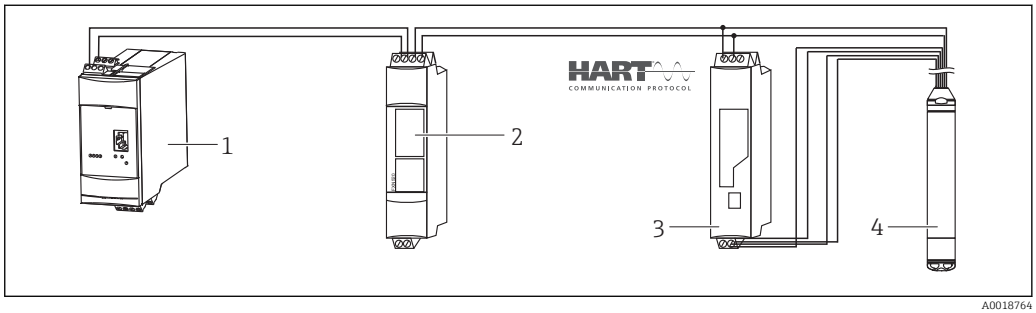

1 Fieldgate FXA520
2 Multidrop Connector FXN520
3 HART-compatible temperature transmitter (e.g. TMT82)
4 Waterpilot FMX21

Without additional compensation due to the anomaly of water, errors of up to 4% may occur at a temperature of +70 °C (+158 °F), for example. With density compensation, this error can be decreased to 0.5 % in the entire temperature range from 0 to +70 °C (+32 to +158 °F).

For additional information, see → 59.

For further information on the devices, please refer to the relevant Technical Information:
- TI01010T: TMT82 temperature transmitter (4 to 20 mA HART)
- TI00369F: Fieldgate FXA520
- TI00400F: Multidrop Connector FXN520

6.7 Post-connection check

❑	Is the device or cable undamaged (visual check)?
❑	Do the cables comply with the requirements ?
❑	Do the cables have adequate strain relief?
❑	Are all cable glands installed, securely tightened and leak-tight?
❑	Does the supply voltage match the specifications on the nameplate?
❑	Is the terminal assignment correct ?

7 Operation options

Endress+Hauser offers comprehensive measuring point solutions with display and/or evaluation units for the Waterpilot FMX21 HART and TMT182 temperature head transmitter.

Your Endress+Hauser service organization would be glad to be of service if you have any other questions. Contact addresses can be found on the website at www.endress.com/worldwide

7.1 Overview of operating options

7.1.1 Operation using Endress+Hauser operating program

FieldCare

The FieldCare operating program is an Endress+Hauser asset management tool based on FDT technology. With FieldCare, you can configure all Endress+Hauser devices as well as devices from other manufacturers that support the FDT standard.

Hardware and software requirements can be found on the Internet:

www.de.endress.com → Search: FieldCare → FieldCare → Technical data.

FieldCare supports the following functions:
- Configuration of transmitters in online/offline mode
- Loading and saving device data (upload/download)
- Documentation of the measuring point

Connection options:
- HART via Commubox FXA195 and USB interface of a computer
- HART via Fieldgate FXA520

- Further information on FieldCare and software download can be found on the internet (www.de.endress.com ® Downloads ® Text Search: FieldCare).
- Connecting the Commubox FXA195
- As not all internal device dependencies can be mapped in offline operation, the consistency of the parameters must be checked once again before they are transmitted to the device.

DeviceCare

Function scope

Tool for connecting and configuring Endress+Hauser field devices.

The fastest way to configure Endress+Hauser field devices is with the dedicated "DeviceCare" tool. Together with the device type managers (DTMs) it presents a convenient, comprehensive solution.

For details, see Innovation brochure IN01047S

7.1.2 Operation via Field Xpert SFX

Compact, flexible and robust industrial handheld terminal for remote configuration and for obtaining measured values via the HART current output or FOUNDATION Fieldbus. For details, see the Operating Instructions BA00060S/04.

7.1.3 Operation via RIA15

The RIA15 can be used as a local display unit and for the basic configuration of the Waterpilot FMX21 hydrostatic level sensor via HART.

The following parameters can be configured on the FMX21 using the 3 operating keys on the front of the RIA15:
- Pressure engineering unit, level, temperature
- Zero adjustment (only for gauge pressure sensors)
- Empty and full pressure adjustment
- Empty and full level adjustment
- Reset to factory defaults

Further information on the operating parameters → 67

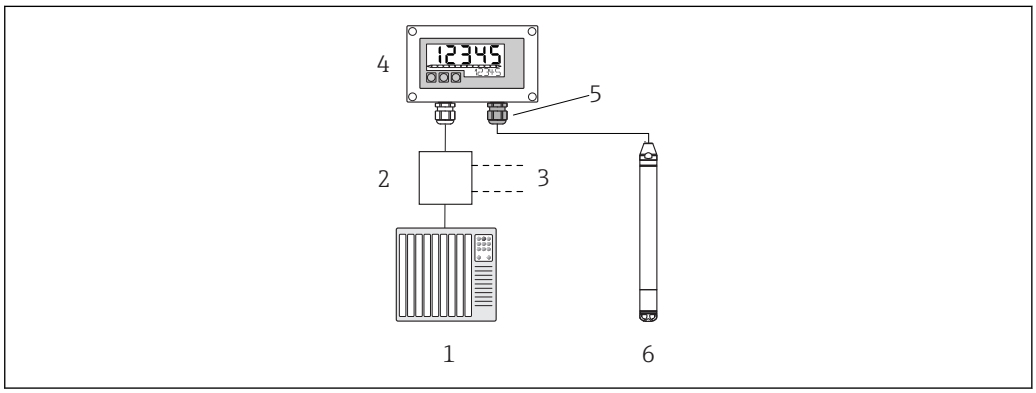

5 Remote operation of the Waterpilot FMX21 via the RIA15

1 PLC
2 Transmitter power supply, e.g. RN221N (with communication resistor)
3 Connection for Commubox FXA195 and Field Communicator 375, 475
4 RIA15 loop-powered process display unit
5 Cable gland M16 with pressure compensation membrane
6 Waterpilot FMX21

7.2 Operating concept

Operation with an operating menu is based on an operation concept with "user roles" .

User role	Meaning
Operator	Operators are responsible for the devices during normal "operation". This is usually limited to the reading of process values. If the work with the devices goes beyond reading, it concerns simple, application-specific functions that are used in operation. Should an error occur, these users simple forward the information on the errors but do not intervene themselves.
Maintenance	Service engineers usually work with the devices in the phases following device commissioning. They are primarily involved in maintenance and troubleshooting activities for which simple settings have to be made at the device. Technicians work with the devices over the entire life cycle of the product. Thus, commissioning and advanced settings and configurations are some of the tasks they have to carry out.
Expert	Experts work with the devices over the entire life cycle of the device, but, in part, have high requirements on the devices. Individual parameters/functions from the overall functionality of the devices are required for this purpose time and again. In addition to technical, process-oriented tasks, experts can also perform administrative tasks (e.g. user administration). "Experts" can avail of the entire parameter set.

7.3 Structure of the operating menu

User role	Submenu	Meaning/use
Operator	Display/ operat.	Contains parameters that are needed to configure the measured value display (selecting the values displayed, display format, etc.). With this submenu, users can change the measured value display without affecting the actual measurement.
Maintenance	setup	Contains all the parameters that are needed to commission measuring operations. This submenu has the following structure: ▪ **Standard setup parameters** A wide range of parameters, which can be used to configure a typical application, is available at the start. The measuring mode selected determines which parameters are available. After making settings for all these parameters, the measuring operation should be completely configured in the majority of cases. ▪ **"Extended setup" submenu** The "Extended setup" submenu contains additional parameters for more in-depth configuration of the measurement operation, for conversion of the measured value and for scaling the output signal. This menu is split into additional submenus depending on the measuring mode selected.
Maintenance	Diagnosis	Contains all the parameters that are needed to detect and analyze operating errors. This submenu has the following structure: ▪ **Diagnostic list** contains up to 10 currently pending error messages. ▪ **Event logbook** contains the last 10 error messages (no longer pending). ▪ **Instrument info** contains information for identifying the device. ▪ **Measured values** contains all current measured values. ▪ **Simulation** Is used to simulate pressure, level, current and alarm/warning. ▪ **Enter reset code**
Expert	Expert	Contains all the parameters of the device (including those already in one of the submenus). The "Expert" submenu is structured by the function blocks of the device. It thus contains the following submenus: ▪ **System** contains all device parameters that do not affect either measurement or integration into a distributed control system. ▪ **Measurement** contains all parameters for configuring the measurement. ▪ **Output** contains all parameters for configuring the current output. ▪ **Communication** contains all parameters for configuring the HART interface. ▪ **Diagnosis** contains all parameters required to detect and analyze operating errors.

7.4 Locking/unlocking operation

Once you have entered all the parameters, you can lock your entries against unauthorized and undesired access.

The "Operator code" parameter is used to lock/unlock the device.

Operator code

Navigation Setup → Extended setup → Operator code

Read permission Operator/Service engineers/Expert

Write permission Operator/Service engineers/Expert

Description Use this function to enter a code to lock or unlock operation.

User entry
- To lock: Enter a number ≠ the release code (value range: 1 to 65535).
- To unlock: Enter the release code.

Factory setting 0

Note The release code is "0" in the order configuration. Another release code can be defined in the "Code definition" parameter. If the user has forgotten the release code, the release code can be visible by entering the number "5864".

The release code is defined in the "Code definition" parameter.

Code definition

Navigation Setup → Extended setup → Code definition

Read permission Operator/Service engineers/Expert

Write permission Operator/Service engineers/Expert

Description Use this function to enter a release code with which the device can be unlocked.

User entry A number from 0 to 9999

Factory setting 0

Note The device setup can also be disabled on the RIA15 via a 4-digit user code.
Additional information is available in the RIA15 Operating Instructions BA01170K.

7.5 Resetting to factory settings (reset)

By entering a certain code, you can completely or partially reset the entries for the parameters to the factory settings [1]. Enter the code via the "Enter reset code" parameter (menu path: "Diagnosis" → "Enter reset code").

There are various reset codes for the device. The following table illustrates which parameters are reset by the particular reset codes. To perform a reset, operation must be unlocked (see the "Locking/unlocking operation" section).→ 38

Any customer-specific configuration carried out at the factory is not affected by a reset (customer-specific configuration remains). If you want to change the customer-specific configuration carried out at the factory, please contact Endress+Hauser Service. As there is no separate service level, the order code and serial number can be changed without a specific release code.

1) . The factory setting for the individual parameters is specified in the parameter description

Reset code [1]	Description and effect
62	**PowerUp reset (warm start)** ▪ The device is restarted. ▪ Data is read back anew from the EEPROM (process is reinitialized). ▪ Any simulation which may be running is ended.
333	**User reset** ▪ This code resets all the parameters apart from: - Device tag - Linearization table - Operating hours - Event logbook - Curr. trim 4 mA - Curr. trim 20 mA ▪ Any simulation which may be running is ended. ▪ The device is restarted.
7864	**Total reset** ▪ This code resets all the parameters apart from: - Operating hours - Event logbook ▪ Any simulation which may be running is ended. ▪ The device is restarted.

1) To be entered in "System" → "Management" → "Enter reset code"

After a "Total reset" in FieldCare you have to press the "refresh" button in order to ensure that the measuring units are also reset.

8 Integrating device via HART® protocol

Version data for the device

Firmware version	01.00.zz	▪ On the title page of the Operating instructions ▪ On nameplate → 🖹 15 ▪ **Firmware Version** parameter Diagnosis→ Instrument info → Firmware version
Manufacturer ID	17 (0x11)	**Manufacturer ID.** parameter Diagnosis → Instrument info→ Manufacturer ID
Device type code	36 (0x24)	**Device type code** parameter Diagnosis → Instrument info → Device type code
HART protocol revision	6.0	---
Device revision	1	▪ On nameplate → 🖹 15 ▪ **Device revision** parameter Diagnosis→ Instrument info → Device revision

The suitable device description file (DD) for the individual operating tools is listed in the table below, along with information on where the file can be acquired.

Operating tools

Operating tool	Reference sources for device descriptions (DD and DTM)
FieldCare	▪ www.endress.com → Downloads area ▪ CD–ROM (contact Endress+Hauser) ▪ DVD (contact Endress+Hauser)
AMS Device Manager (Emerson Process Management)	www.endress.com → Downloads area
SIMATIC PDM (Siemens)	www.endress.com → Downloads area
Field Communicator 375, 475 (Emerson Process Management)	Use update function of handheld terminal

8.1 HART process variables and measured values

The following numbers are assigned to the process variables in the factory:

Process variable	Pressure	Level	
		Linear	Table active
First process variable (Primary variable)	0 (Pressure measured)	8 (Level before linearization)	9 (Tank content)
Second process variable (Secondary variable)	2 (Corrected press.)	0 (Pressure measured)	8 (Level before linearization)

Process variable	Pressure	Level	
		Linear	Table active
Third process variable (Tertiary variable)	3 (Sensor pressure)	2 (Corrected press.)	0 (Pressure measured)
Fourth process variable (Quaternary variable)	4 (Sensor temp.)		

The assignment of the device variables to the process variable is displayed in the **Expert → Communication → HART output** menu.

The assignment of the device variables to the process variable (SV, TV, QV) can be changed using HART command 51.

An overview of the possible device variables can be found in the following section.

8.2 Device variables and measured values

The following measured values are assigned to the individual device variables:

Device variable code	Device variable	Measured value	Operating mode
0	PRESSURE_1_FINAL_VALUE	Pressure measured	All
1	PRESSURE_1_AFTER_DAMPING	Pressure af.damp	All
2	PRESSURE_1_AFTER_CALIBRATION	Corrected press.	All
3	PRESSURE_1_AFTER_SENSOR	Corrected press.	All
4	MEASURED_TEMPERATURE_1	Sensor temp.	All
8	MEASURED_LEVEL_AFTER_ SIMULATION	Level before lin.	Only level
9	MEASURED_TANK_CONTENT_AFTER_ SIMULATION	Tank content	Only level
10	CORRECTED_MEASUREMENT_ DENSITY	Process density	Only level
12	HART_INPUT_VALUE [1)]	HART input val.	-
251	None (no device variable is mapped)	-	All (but only for quaternary variable)

1) Cannot be selected as an output

The device variables can be queried from a HART® master using HART® command 9 or 33.

9 Commissioning

NOTICE

If a pressure smaller than the minimum permitted pressure or greater than the maximum permitted pressure is present at the device, the following messages are output in succession:

- "S140 Working range P" or "F140 Working range P" (depending on the setting in the "Alarm behav. P" parameter)
- "S841 Sensor range" or "F841 Sensor range" (depending on the setting in the "Alarm behav. P" parameter)
- "S971 Adjustment" (depending on setting in "Alarm behav. P" parameter

9.1 Post-installation check and function check

Before commissioning your measuring point, ensure that the post-installation and post-connection check have been performed.

- "Post-installation check" checklist→ 25
- "Post-connection check" checklist→ 35

9.2 Unlocking/locking configuration

If the device is locked to prevent configuration, it must first be unlocked.

9.2.1 Locking/unlocking software

If the device is locked via the software (device access code), the key symbol appears in the measured value display. If an attempt is made to write to a parameter, a prompt for the device access code appears. To unlock, enter the user-defined device access code.

9.3 Commissioning

Commissioning comprises the following steps:

- Function check→ 43
- Selection of the measuring mode and pressure unit → 43
- Position adjustment → 44
- Configuring measurement:
  - Pressure measurement→ 46
  - Level measurement → 48

9.4 Measuring mode selection

The device is configured for the "Pressure" measuring mode as standard. The measuring range and the unit in which the measured value is transmitted correspond to the data on the nameplate.

WARNING

Changing the measuring mode affects the span (URV)

This situation can result in product overflow.

- If the measuring mode is changed, the setting for the span (URV) must be checked in the "Setup" operating menu and readjusted if necessary.

Measuring mode

Navigation Setup → Measuring mode

Write permission Operator/Service engineers/Expert

Description Select the measuring mode.
The operating menu is structured differently depending on the measuring mode selected.

Options
- Pressure
- Level

Factory setting Level

9.5 For selecting the pressure engineering unit

Press. eng. unit

Navigation Setup → Press. eng. unit

Write permission Operator/Service engineers/Expert

Description Select the pressure engineering unit. If a new pressure engineering unit is selected, all pressure-specific parameters are converted and displayed with the new unit.

Options
- mbar, bar
- mmH2O, mH2O, inH2O
- ftH2O
- Pa, kPa, MPa
- psi
- mmHg, inHg
- kgf/cm^2

Factory setting mbar or bar depending on the nominal measuring range of the sensor module, or as per order specifications.

9.6 Position adjustment

The pressure resulting from the orientation of the device can be corrected here.

Pos. zero adjust (gauge pressure sensor)

Navigation Setup → Pos. zero adjust

Write permission Operator/Service engineers/Expert

Description Position adjustment – the pressure difference between zero (set point) and the measured pressure need not be known.

Options
- Confirm
- Cancel

Example
- Measured value = 2.2 mbar (0.033 psi)
- You correct the measured value via the "Pos. zero adjust" parameter with the "Confirm" option. This means that you are assigning the value 0.0 to the pressure present.
- Measured value (after pos. zero adjust) = 0.0 mbar
- The current value is also corrected.

Factory setting Cancel

Calib. offset

Write permission Service engineers/Expert

Description Position adjustment – the pressure difference between the set point and the measured pressure must be known.

Example
- Measured value = 982.2 mbar (14.73 psi)
- You correct the measured value with the value entered (e.g. 2.2 mbar (0.033 psi)) via the "Calib. Offset" parameter. This means that you are assigning the value 980.0 (14.7 psi) to the pressure present.
- Measured value (after pos. zero adjust) = 980.0 mbar (14.7 psi)
- The current value is also corrected.

Factory setting 0.0

9.7 Configuring the damping

The output signal follows measured value changes with the delay time. This can be configured via the operating menu.

Damping

Navigation Setup → Damping

Write permission Operator/Service engineers/Expert
(if the "Damping" DIP switch is set to "on")

Description Enter damping time (time constant τ) ("Damping" DIP switch set to "on")
Display damping time (time constant τ) ("Damping" DIP switch set to "off").
The damping affects the speed at which the measured value reacts to changes in pressure.

Input range 0.0 to 999.0 s

Factory setting 2.0 sec. or according to order specifications

9.8 Configuring pressure measurement

9.8.1 Calibration with reference pressure (wet calibration)

Example:

In this example, a device with a 400 mbar (6 psi) sensor module is configured for the 0 to +300 mbar (0 to 4.5 psi) measuring range, i.e. 0 mbar and 300 mbar (4.5 psi) are assigned, respectively, to the 4 mA value and the 20 mA value.

Prerequisite:

The pressure values 0 mbar and 300 mbar (4.5 psi) can be specified. For example, the device is already installed.

Due to the orientation of the device, there may be pressure shifts in the measured value, i.e. the measured value is not zero in a pressureless condition. For information on how to perform position adjustment, see → 44.

	Description
1	Select the "Pressure" measuring mode via the "Measuring Mode" parameter. Menu path: Setup → Measuring mode **WARNING** **Changing the measuring mode affects the span (URV)** This situation can result in product overflow. ► If the measuring mode is changed, the setting for the span (URV) must be checked in the "Setup" operating menu and readjusted if necessary.
2	Select a pressure unit via the "Press eng. unit" parameter, here "mbar" for example. Menu path: Setup → Press. eng. unit
3	The pressure for the LRV (4 mA value) is present at the device, here 0 mbar for example
	Select the "Get LRV" parameter. Menu path: Setup → Extended setup → Current output → Get LRV
	Confirm the present value by selecting "Apply". The present pressure value is assigned to the lower current value (4 mA).
4	The pressure for the URV (20 mA value) is present at the device, here 300 mbar (4.5 psi) for example.
	Select the "Get URV" parameter. Menu path: Setup → Extended setup → Current output → Get URV
	Confirm the present value by selecting "Apply". The present pressure value is assigned to the upper current value (20 mA).
5	Result: The measuring range is configured for 0 to +300 mbar (0 to 4.5 psi).

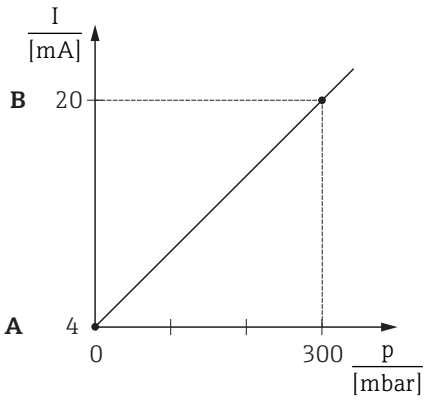

A See table, step 3.
B See table, step 4.

9.8.2 Calibration without reference pressure (dry calibration)

Example:

In this example, a device with a 400 mbar (6 psi) sensor module is configured for the 0 to +300 mbar (0 to 4.5 psi) measuring range, i.e. 0 mbar and 300 mbar (4.5 psi) are assigned, respectively, to the 4 mA value and the 20 mA value.

Prerequisite:

This is a theoretical calibration, i.e. the pressure values for the lower and upper range are known.

Due to the orientation of the device, there may be pressure shifts in the measured value, i.e. the measured value is not zero in a pressureless condition. For information on how to perform position adjustment, see → 44.

	Description
1	Select the "Pressure" measuring mode via the "Measuring Mode" parameter. Menu path: Setup → Measuring mode **WARNING** **Changing the measuring mode affects the span (URV)** This situation can result in product overflow. ▶ If the measuring mode is changed, the setting for the span (URV) must be checked in the "Setup" operating menu and readjusted if necessary.
2	Select a pressure unit via the "Press eng. unit" parameter, here "mbar" for example. Menu path: Setup → Press. eng. unit
3	Select the "Set LRV" parameter. Menu path: Setup → Extended setup → Current output → Set LRV
	Enter the value for the "Set LRV" parameter (here 0 mbar) and confirm. This pressure value is assigned to the lower current value (4 mA).
4	Select the "Set URV" parameter. Menu path: Setup → Extended setup → Current output → Set URV
	Enter the value for the "Set URV" parameter, here 300 mbar (4.5 psi), and confirm. This pressure value is assigned to the upper current value (20 mA).
5	Result: The measuring range is configured for 0 to +300 mbar (0 to 4.5 psi).

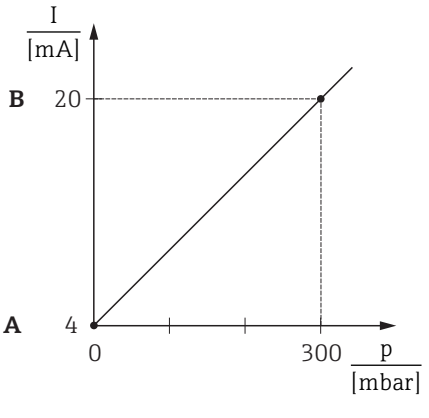

A *See table, step 3.*
B *See table, step 4.*

9.9 Configuring level measurement

9.9.1 Information on level measurement

You have a choice of two methods for calculating the level: "In pressure" and "In height". The table in the "Overview of level measurement" section that follows provides you with an overview of these two measuring tasks.

- The limit values are not checked, i.e. the values entered must be appropriate for the sensor module and the measuring task for the device to be able to measure correctly.
- Customer-specific units are not possible.
- The values entered for "Empty calib./Full calib.", "Empty pressure/Full pressure", "Empty height/Full height" and "Set LRV/Set URV" must be at least 1% apart. The value will be rejected, and a message displayed, if the values are too close together.

9.9.2 Overview of level measurement

Measuring task	Level selection	Measured variable options	Description	Measured value display
Calibration is performed by entering two pressure-level value pairs.	"In pressure"	Via the "Output unit" parameter: %, level, volume or mass units	▪ Calibration with reference pressure (wet calibration) → 🖹 50 ▪ Calibration without reference pressure (dry calibration)→ 🖹 48	The measured value display and the "Level before lin" parameter display the measured value.
Calibration is performed by entering the density and two height-level value pairs.	"In height"		▪ Calibration with reference pressure (wet calibration) → 🖹 54 ▪ Calibration without reference pressure (dry calibration)→ 🖹 52	

9.9.3 "In pressure" level selection Calibration without reference pressure (dry calibration)

Example:

In this example, the volume in a tank should be measured in liters. The maximum volume of 1 000 l (264 gal) corresponds to a pressure of 400 mbar (6 psi).

The minimum volume of 0 liters corresponds to a pressure of 0 mbar since the process isolating diaphragm of the probe is at the start of the level measuring range.

Prerequisite:

- The measured variable is in direct proportion to the pressure.
- This is a theoretical calibration i.e. the pressure and volume values for the lower and upper calibration point must be known.

- The values entered for "Empty calib./Full calib.", "Empty pressure/Full pressure" and "Set LRV/Set URV" must be at least 1% apart. The value will be rejected, and a message displayed, if the values are too close together. Further limit values are not checked, i.e. the values entered must be appropriate for the sensor module and the measuring task for the device to be able to measure correctly.
- Due to the orientation of the device, there may be pressure shifts in the measured value, i.e. when the vessel is empty or partly filled, the measured value is not zero. For information on how to perform position adjustment, see → 🖹 44.

	Description
1	Select the "Level" measuring mode via the "Measuring mode" parameter. Menu path: Setup → Measuring mode **⚠ WARNING** **Changing the measuring mode affects the span (URV)** This situation can result in product overflow. ▶ If the measuring mode is changed, the setting for the span (URV) must be checked in the "Setup" operating menu and readjusted if necessary.
2	Select a pressure unit via the "Press eng. unit" parameter, here "mbar" for example. Menu path: Setup → Press. eng. unit
3	Select the "In pressure" level mode via the "Level selection" parameter. Menu path: Setup → Extended setup → Level → Level selection.
4	Select a volume unit via the "Output unit" parameter, here "l" (liters) for example. Menu path: Setup → Extended setup → Level → Output unit
5	Select the "Dry" option via the "Calibration mode" parameter. Menu path: Setup → Extended setup → Level → Calibration mode
6	Enter the volume value for the lower calibration point via the "Empty calib." parameter, here 0 liters for example. Menu path: Setup → Extended setup → Level → Empty calib.
7	Enter the pressure value for the lower calibration point via the "Empty pressure" parameter, here "0 mbar" for example. Menu path: Setup → Extended setup → Level → Empty pressure
8	Enter the volume value for the upper calibration point via the "Full calib." parameter, here 1 000 l (264 gal) for example. Menu path: Setup → Extended setup → Level → Full calib.
9	Enter the pressure value for the upper calibration point via the "Full pressure" parameter, here 400 mbar (6 psi) for example. Menu path: Setup → Extended setup → Level → Full pressure
10	"Adjust density" contains the factory setting 1.0 but can be changed if required. The value pairs subsequently entered must correspond to this density. Menu path: Setup → Extended setup → Level → Adjust density
11	Set the volume value for the lower current value (4 mA) via the "Set LRV" parameter (0 l). Menu path: Setup → Extended setup → Current output → Set LRV
12	Set the volume value for the upper current value (20 mA) via the "Set URV" parameter(1 000 l (264 gal)). Menu path: Setup → Extended setup → Current output → Set URV

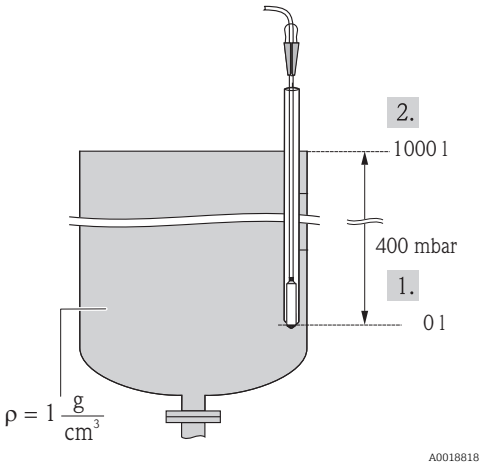

1 See table, steps 6 and 7.
2 See table, steps 8 and 9.

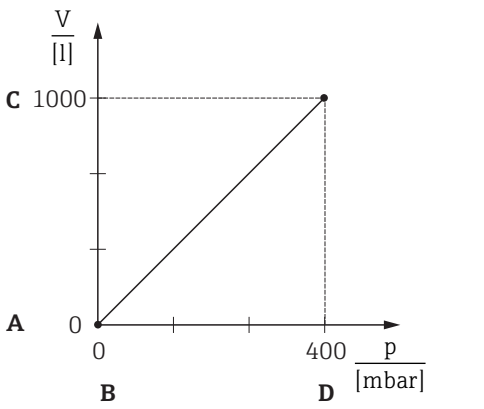

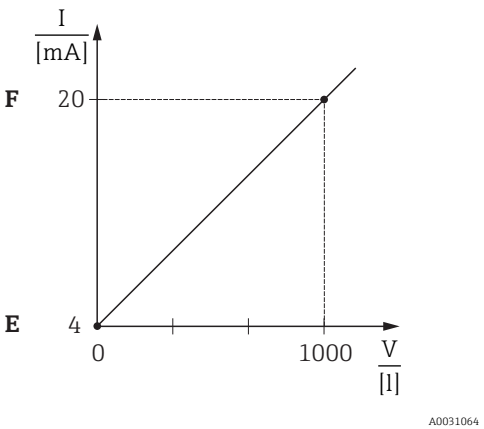

A See table, step 6.
B See table, step 7.
C See table, step 8.
D See table, step 9.
E See table, step 11
F See table, step 12

	Description	
13	If the process uses a medium other than that on which the calibration was based, the new density must be specified in the "Process density" parameter. Menu path: Setup → Extended setup → Current output → Process density.	
14	If density correction is required, assign the temperature probe in the "Auto dens. corr." parameter. A density correction is only possible for water. A temperature-density curve that is saved in the device is used. For this reason, the "Adjust density" (step 10) and "Process density" (step 13) parameters are not used here. Menu path: Expert → Application → Level → Auto dens. corr.	
15	Result: The measuring range is configured for 0 to 1 000 l (0 to 264 gal).	

For this level mode, the measured variables %, level, volume and mass are available, see "Output unit" → 94.

9.9.4 "In pressure" level selection Calibration with reference pressure (wet calibration)

Example:

In this example, the level in a tank should be measured in "m". The maximum level is 3 m (9.8 ft).

The pressure range is derived from the level and the density of the medium. In this situation, the device sets the pressure range to 0 to +300 mbar (0 to 4.5 psi).

Prerequisite:

- The measured variable is in direct proportion to the pressure.
- The tank can be filled and emptied.

The values entered for "Empty calib./Full calib." and" Set LRV/Set URV" and the pressures present must be at least 1% apart. The value will be rejected, and a message displayed, if the values are too close together. Other limit values are not checked, i.e. the values entered must be appropriate for the sensor and the measuring task for the device to be able to measure correctly.

	Description
1	Perform "position adjustment"→ 🖹 44.
2	Select the "Level" measuring mode via the "Measuring mode" parameter. Menu path: Setup → Measuring mode **⚠ WARNING** **Changing the measuring mode affects the span (URV)** This situation can result in product overflow. ▶ If the measuring mode is changed, the setting for the span (URV) must be checked in the "Setup" operating menu and readjusted if necessary.
3	Select a pressure unit via the "Press eng. unit" parameter, here "mbar" for example. Menu path: Setup → Press. eng. unit
4	Select the "In pressure" level mode via the "Level selection" parameter. Menu path: Setup → Extended setup → Level → Level selection.
5	If density correction is required, assign the temperature probe in the "Auto dens. corr." parameter. Menu path: Expert → Application → Auto dens. corr. A density correction is only possible for water. A temperature-density curve that is saved in the device is used. For this reason, the "Adjust density" (step 8) and "Process density" (step 13) parameters are not used here.
6	Select a level unit via the "Output unit" parameter, here "m" for example. Menu path: Setup → Extended setup → Level → Output unit
7	Select the "Wet" option via the "Calibration mode" parameter. Menu path: Setup → Extended setup → Level → Calibration mode
8	If the calibration is performed with a medium other than the process medium, enter the density of the calibration medium in the "Adjust density" parameter. Menu path: Setup → Extended setup → Level → Adjust density ℹ The process density can be changed only if automatic density correction is switched off (see step 5).
9	The hydrostatic pressure for the lower calibration point is present at the device, here "0 mbar" for example.
	Select the "Empty calib." parameter. Menu path: Setup → Extended setup → Level → Empty calib.
	Enter the level value, here 0 m for example. The pressure value present is assigned to the lower level value by confirming the value.
10	The hydrostatic pressure for the upper calibration point is present at the device, here 300 mbar (4.35 psi) for example.

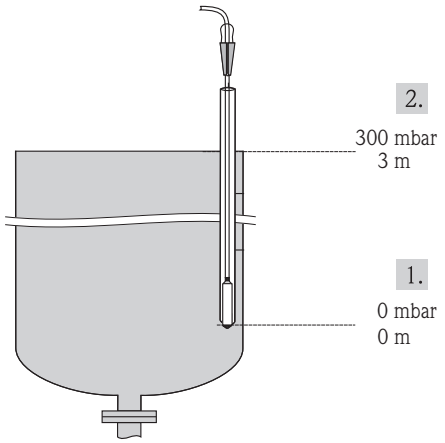

1 See table, step 9.
2 See table, step 10.

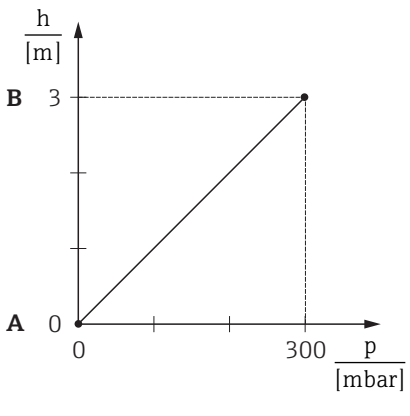

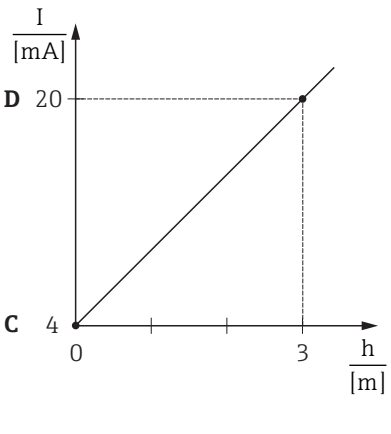

A See table, step 9.
B See table, step 10.
C See table, step 11.
D See table, step 12.

	Description	
	Select the "Full calib." parameter. Menu path: Setup → Extended setup → Level → Full calib.	
	Enter the level value, here 3 m (9.8 ft) for example. The pressure value present is assigned to the upper level value by confirming the value.	
11	Use the "Set LRV" parameter to set the level value for the lower current value (4 mA), here "0 m" for example. Menu path: Setup → Extended setup → Current output → Set LRV	
12	Use the "Set URV" parameter to set the upper current value (20 mA) (3 m (9.8 ft)). Menu path: Setup → Extended setup → Current output → Set URV	
12	If the process uses a medium other than that on which the calibration was based, the new density must be specified in the "Process density" parameter. Menu path: Setup → Extended setup → Level → Process density. The process density can be changed only if automatic density correction is switched off (see step 5).	
13	Result: The measuring range is configured for 0 to 3 m (0 to 9.8 ft).	

For this level mode, the measured variables %, level, volume and mass are available, see "Output unit". → 94.

9.9.5 "In height" level selection Calibration without reference pressure (dry calibration)

Example:

In this example, the volume in a tank should be measured in liters. The maximum volume of 1 000 l (264 gal) corresponds to a level of 4 m (13 ft). The minimum volume of 0 liter corresponds to a level of 0 m since the process isolating diaphragm of the probe is at the start of the level measuring range.

Prerequisite:

- The measured variable is in direct proportion to the pressure.
- This is a theoretical calibration i.e. the height and volume values for the lower and upper calibration point must be known.

- The values entered for "Empty calib./Full calib.", "Empty height/Full height" and" Set LRV/Set URV" must be at least 1% apart. The value will be rejected, and a message displayed, if the values are too close together. Other limit values are not checked, i.e. the values entered must be appropriate for the sensor and the measuring task for the device to be able to measure correctly.
- Due to the orientation of the device, there may be pressure shifts in the measured value, i.e. when the vessel is empty or partly filled, the measured value is not zero. For information on how to perform position adjustment, see → 44.

	Description
1	Select the "Level" measuring mode via the "Measuring mode" parameter. Menu path: Setup → Measuring mode **⚠ WARNING** **Changing the measuring mode affects the span (URV)** This situation can result in product overflow. ▶ If the measuring mode is changed, the setting for the span (URV) must be checked in the "Setup" operating menu and readjusted if necessary.
2	Select a pressure unit via the "Press eng. unit" parameter, here "mbar" for example. Menu path: Setup → Press. eng. unit
3	Select the "In height" level mode via the "Level selection" parameter. Menu path: Setup → Extended setup → Level → Level selection.
4	If density correction is required, assign the temperature probe in the "Auto dens. corr." parameter. Menu path: Setup → Extended setup → Level → Level selection.
4	Select a volume unit via the "Output unit" parameter, here "l" (liters) for example. Menu path: Setup → Extended setup → Level → Output unit A density correction is only possible for water. A temperature-density curve that is saved in the device is used. For this reason, the "Adjust density" (step 12) and "Process density" (step 15) parameters are not used here.
5	Select a volume unit via the "Output unit" parameter, here "l" (liters) for example. Menu path: Setup → Extended setup → Level → Output unit
6	Select a level unit via the "Height unit" parameter, here "m" for example. Menu path: Setup → Extended setup → Level → Height unit
7	Select the "Dry" option via the "Calibration mode" parameter. Menu path: Setup → Extended setup → Level → Calibration mode
8	Enter the volume value for the lower calibration point via the "Empty calib." parameter, here 0 liters for example. Menu path: Setup → Extended setup → Level → Empty calib.
9	Enter the height value for the lower calibration point via the "Empty height" parameter, here 0 m for example. Menu path: Setup → Extended setup → Level → Empty height
10	Enter the volume value for the upper calibration point via the "Full calib." parameter, here 1 000 l (264 gal) for example. Menu path: Setup → Extended setup → Level → Full calib.

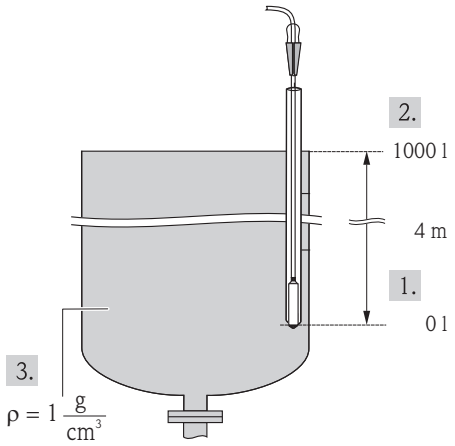

A0018827

1 See table, steps 10 and 11.
2 See table, steps 13 and 14.
3 See table, step 12

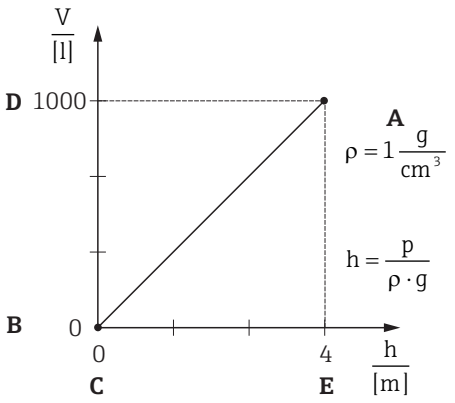

A0017666

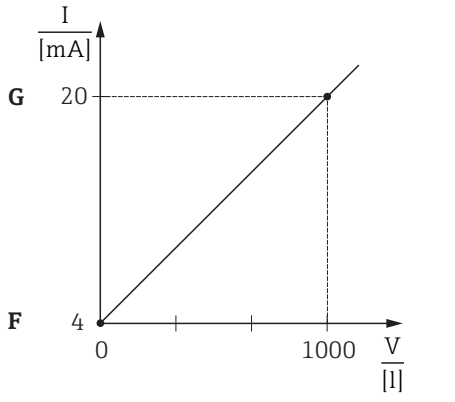

A0031067

A See table, step 12.
B See table, step 8.
C See table, step 9.
D See table, step 10.
E See table, step 11.
F See table, step 13.
G See table, step 14.

	Description	
11	Enter the height value for the upper calibration point via the "Full height" parameter, here 4 m (13 ft) for example. Menu path: Setup → Extended setup → Level → Full height	
12	Enter the density of the medium via the "Adjust density" parameter, here "1 g/cm³" (1 SGU) for example. Menu path: Setup → Extended setup → Level → Adjust density	
13	Set the volume value for the lower current value (4 mA) via the "Set LRV" parameter (0 l). Menu path: Setup → Extended setup → Current output → Set LRV	
14	Set the volume value for the upper current value (20 mA) via the "Set URV" parameter (1 000 l (264 gal)). Menu path: Setup → Extended setup → Current output → Set URV	
15	If the process uses a medium other than that on which the calibration was based, the new density must be specified in the "Process density" parameter. Menu path: Setup → Extended setup → Current output → Process density. The process density can only be changed if automatic density correction is switched off (see Step 4).	
16	Result: The measuring range is configured for 0 to 1 000 l (0 to 264 gal).	

For this level mode, the measured variables %, level, volume and mass are available, see "Output unit". → 94.

9.9.6 "In height" level selection Calibration with reference pressure (wet calibration)

Example:

In this example, the volume in a tank should be measured in liters. The maximum volume of 1 000 l (264 gal) corresponds to a level of 4 m (13 ft).

The minimum volume of 0 liter corresponds to a level of 0 m since the process isolating diaphragm of the probe is at the start of the level measuring range. The density of the fluid is 1 g/cm³ (1 SGU).

Prerequisite:

- The measured variable is in direct proportion to the pressure.
- The tank can be filled and emptied.

The values entered for "Empty calib./Full calib." and" Set LRV/Set URV" and the pressures present must be at least 1% apart. The value will be rejected, and a message displayed, if the values are too close together. Other limit values are not checked, i.e. the values entered must be appropriate for the sensor and the measuring task for the device to be able to measure correctly.

	Description	
1	Perform "position adjustment"→ 🖹 44.	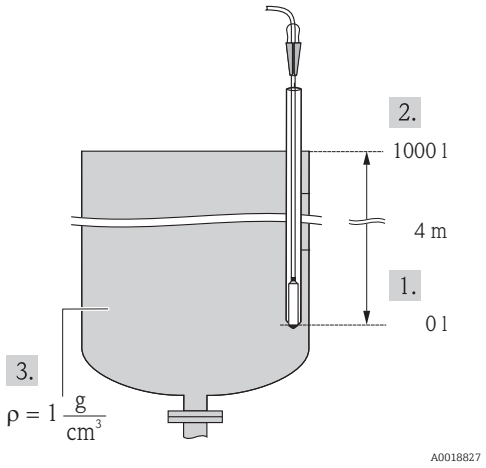 A0018827 *1 See table, step 9.* *2 See table, step 10.* *3 See table, step 11.*
2	Select the "Level" measuring mode via the "Measuring mode" parameter. Menu path: Setup → Measuring mode **⚠ WARNING** **Changing the measuring mode affects the span (URV)** This situation can result in product overflow. ▶ If the measuring mode is changed, the setting for the span (URV) must be checked in the "Setup" operating menu and readjusted if necessary.	
3	Select the "In height" level mode via the "Level selection" parameter. Menu path: Setup → Extended setup → Level → Level selection.	
4	If density correction is required, assign the temperature probe in the "Auto dens. corr." parameter. Menu path: Expert → Application → Auto dens. corr. A density correction is only possible for water. A temperature-density curve that is saved in the device is used. For this reason, the "Adjust density" (step 11) and "Process density" (step 14) parameters are not used here.	
5	Select a pressure unit via the "Press eng. unit" parameter, here "mbar" for example. Menu path: Setup → Press. eng. unit	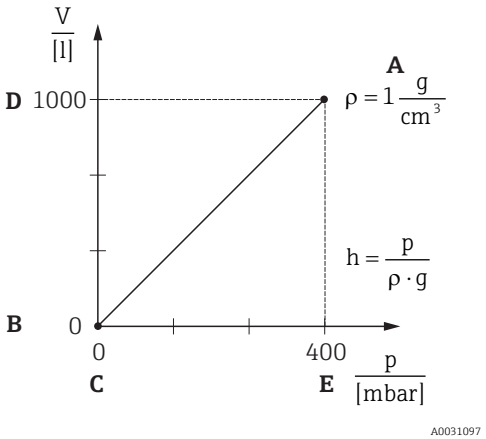 A0031097
6	Select a volume unit via the "Output unit" parameter, here "l" (liters) for example Menu path: Setup → Extended setup → Level → Output unit	
7	Select a height unit via the "Height unit" parameter, here "m" for example. Menu path: Setup → Extended setup → Level → Height unit	
8	Select the "Wet" option via the "Calibration mode" parameter. Menu path: Setup → Extended setup → Level → Calibration mode	
9	The hydrostatic pressure for the lower calibration point is present at the device, here "0 mbar" for example.	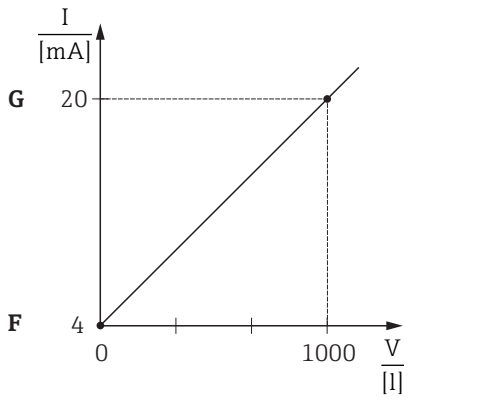 A0031067 *A See table, step 11.* *B See table, step 9.* *C See table, step 9.* *D See table, step 10.*
	Enter the volume value for the lower calibration point via the "Empty calib." parameter, here "0 liters" for example. Menu path: Setup → Extended setup → Level → Empty calib.	
10	The hydrostatic pressure for the upper calibration point is present at the device, here "400 mbar (6 psi)" for example.	
	Enter the volume value for the upper calibration point via the "Full calib." parameter, here 1 000 l (264 gal) for example. Menu path: Setup → Extended setup → Level → Full calib.	

	Description	
11	If the calibration is performed with a medium other than the process medium, enter the density of the calibration medium in the "Adjust density" parameter, here 1 g/cm³ (1 SGU) for example. Menu path: Setup → Extended setup → Level → Adjust density The process density can only be changed if automatic density correction is switched off (see Step 4).	*E See table, step 10.* *F See table, step 12.* *G See table, step 13.*
12	Set the volume value for the lower current value (4 mA) via the "Set LRV" parameter (0 l). Menu path: Setup → Extended setup → Current output → Set LRV	
13	Set the volume value for the upper current value (20 mA) via the "Set URV" parameter(1 000 l (264 gal)). Menu path: Setup → Extended setup → Current output → Set URV	
14	If the process uses a medium other than that on which the calibration was based, the new density must be specified in the "Process density" parameter. Menu path: Setup → Extended setup → Level → Process density. The process density can only be changed if automatic density correction is switched off (see Step 4).	
15	Result: The measuring range is configured for 0 to 1 000 l (0 to 264 gal).	

For this level mode, the measured variables %, level, volume and mass are available, see "Output unit". → 94.

9.9.7 Calibration with partially filled vessel (wet calibration)

Example:

This example explains a wet calibration for cases in which it is not possible to empty the vessel and then fill it to 100%.

During this wet calibration, a level of 20% is used as the calibration point for "Empty" and a level of "25%" is used as the calibration point for "Full".

The calibration is then extended to 0% to 100% and lower range-value (LRV)/upper range-value (URV) are adapted accordingly.

Prerequisite:

- The default value in level mode for the calibration mode is "Wet".
- This value can be adjusted: Menu path: Setup → Extended setup → Level → Calibration mode

	Description	
1	Select the "Level" measuring mode via the "Measuring mode" parameter. Menu path: Setup → Measuring mode **⚠ WARNING** **Changing the measuring mode affects the span (URV)** This situation can result in product overflow. ▶ If the measuring mode is changed, the setting for the span (URV) must be checked in the "Setup" operating menu and readjusted if necessary.	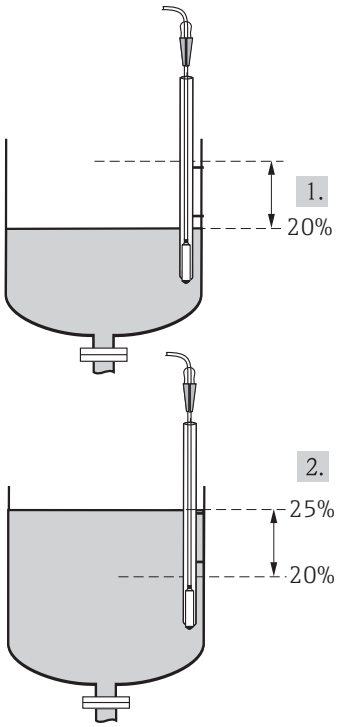 *1 See table, step 2* *2 See table, step 3*
2	Set the value for "Empty calib." with the acting pressure for the level, e.g. 20% Menu path: Setup → Extended setup → Level → Empty calib.	
3	Set the value for "Full calib." with the acting pressure for the level, e.g. 25%. Menu path: Setup → Extended setup → Level → Full calib.	
4	The values for the pressure when the vessel is full or empty are measured automatically during adjustment. The transmitter automatically sets the pressure values that are most suitable for "Empty calib." and "Full calib." as the minimum and maximum pressure which generates the output current. For this reason, the correct upper-range value (URV) and the correct lower-range value (LRV) must be set.	

If the process uses a medium other than that on which the calibration was based, the new density must be specified in the "Process density" parameter. In this case, you have to enter the various densities via the following menu path:
- Setup → Extended setup → Level→ Adjust Density (034) (e.g. 1.0 kg/l for water)
- Setup → Extended setup → Level → Process Density (035) (e.g. 0.8 kg/l for oil)

9.9.8 Level measurement with absolute pressure probe and external pressure signal (electrical differential pressure)

Example:

In this example, a Waterpilot FMX21 and a Cerabar M (each with an absolute pressure measuring cell) are connected via the common communication bus. The level can thus be measured in a deep well, with simultaneous compensation for the effect of atmospheric pressure.

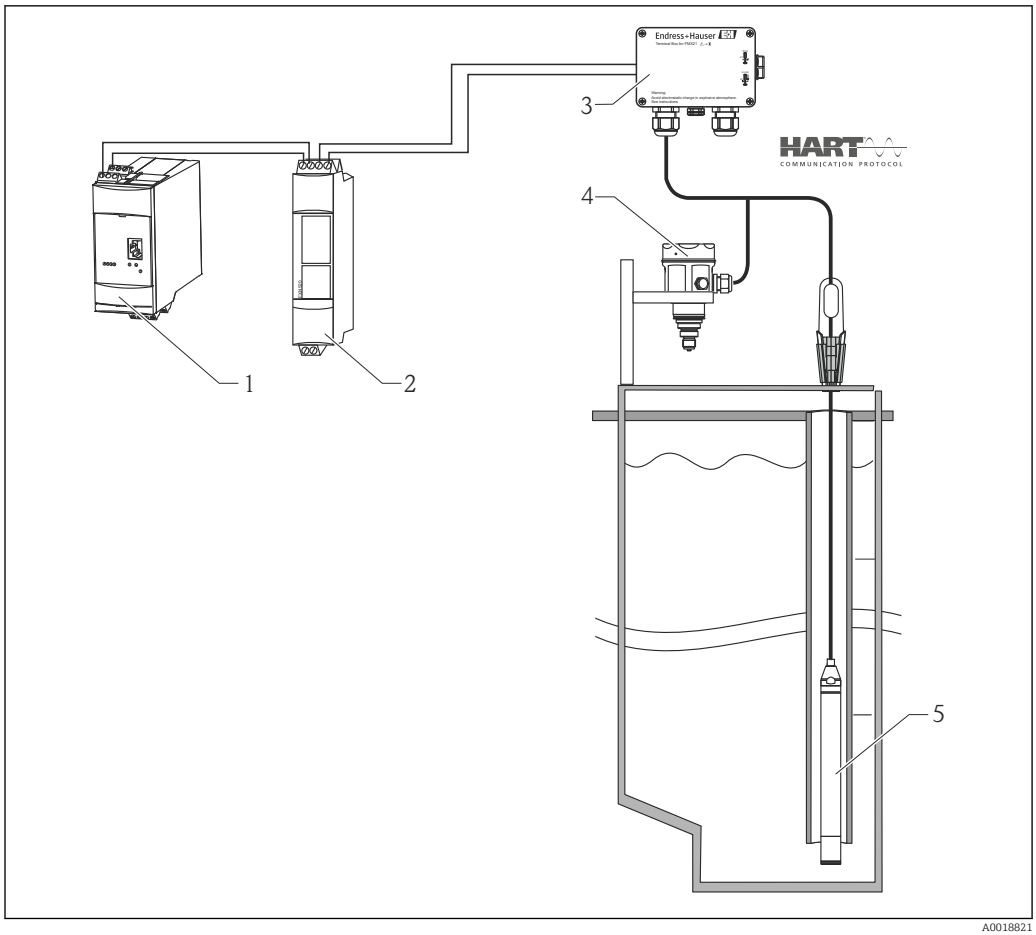

1 *Fieldgate FXA520*
2 *Multidrop Connector FXN520*
3 *Terminal box (can be ordered as an accessory)*
4 *Cerabar M absolute pressure (level)*
5 *Waterpilot absolute pressure (pressure)*

	Sensor level adjustment (Waterpilot)
1	Select the "Pressure" measuring mode via the "Measuring Mode" parameter. Menu path: Setup → Measuring mode **⚠ WARNING** **Changing the measuring mode affects the span (URV)** This situation can result in product overflow. ► If the measuring mode is changed, the setting for the span (URV) must be checked in the "Setup" operating menu and readjusted if necessary.
2	Select a pressure unit via the "Press eng. unit" parameter, here "mbar" for example. Menu path: Setup → Press. eng. unit
3	The sensor is unpressurized, perform a position adjustment → 📄 44
4	Switch on burst mode via the "Burst mode" parameter. Menu path: Expert → Communication → HART config
5	Set the output current to "Fixed" 4.0 mA via the "Current Mode" parameter. Menu path: Expert → Communication → HART config
6	Configure an address ≠0 using the "Bus address" parameter, e.g. bus address = 1. (HART 5.0 master: Range 0 to 15, where address = 0 calls up the "Signaling" setting; HART 6.0 master: Range 0 to 63) Menu path: Expert → Communication → HART config

	Sensor level adjustment (Cerabar)
1	Select the "Level" measuring mode via the "Measuring mode" parameter. Menu path: Setup → Measuring mode **⚠ WARNING** **Changing the measuring mode affects the span (URV)** This situation can result in product overflow. ▶ If the measuring mode is changed, the setting for the span (URV) must be checked in the "Setup" operating menu and readjusted if necessary.
2	Select a pressure unit via the "Press eng. unit" parameter, here "mbar" for example. Menu path: Setup → Press. eng. unit
3	The sensor is unpressurized, perform a position adjustment → 📄 44
4	Set the output current to "Fixed" 4.0 mA via the "Current Mode" parameter. Menu path: Expert → Communication → HART config
5	Configure an address ≠0 using the "Bus address" parameter, e.g. bus address = 2. (HART 5.0 master: Range 0 to 15, where address = 0 calls up the "Signaling" setting; HART 6.0 master: Range 0 to 63) Menu path: Expert → Communication → HART config
6	Activate the reading of a value sent externally in burst mode via the "Electr. Delta P" parameter. Menu path: Expert → Application
7	Perform level adjustment (wet or dry)
8	Result: The measured value output by the atmospheric pressure sensor equals the level in the deep well (differential signal) and can be read out by means of a HART request for the address of the atmospheric pressure sensor.

- It is not permissible to reverse the assignment of the measuring points to the direction of communication.
- The measured value of the transmitting device (via burst) must always be greater than the measured value of the receiving device (via "Electr. Delta P" mode).
- Adjustments that involve an offset in the pressure values (e.g. position adjustment, trim) must always suit the individual sensor and the sensor's orientation irrespective of the "Electr. Delta P" application.
- Other settings result in non-permitted use of the "Electr. Delta P" mode and can lead to incorrect measured values.

9.10 Automatic density compensation

9.10.1 Automatic density compensation with the internally measured sensor temperature

Example:

In this example, a Waterpilot FMX21 is used for level measurement in water. The change in the water density caused by changing temperatures is automatically factored into the level signal by activating the automatic density compensation.

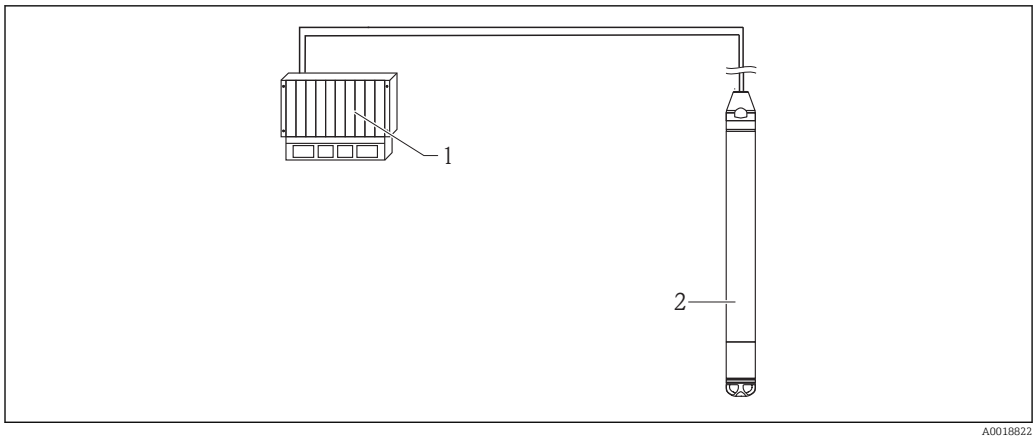

1 HART master, e.g. PLC (programmable logic controller)
2 Waterpilot FMX21

	Waterpilot adjustment for level measurement
1	Select the "Level" measuring mode via the "Measuring mode" parameter. Menu path: Setup → Measuring mode **⚠ WARNING** **Changing the measuring mode affects the span (URV)** This situation can result in product overflow. ▶ If the measuring mode is changed, the setting for the span (URV) must be checked in the "Setup" operating menu and readjusted if necessary.
2	Select a pressure unit via the "Press eng. unit" parameter, here "mbar" for example. Menu path: Setup → Press. eng. unit
3	The sensor is unpressurized, perform a position adjustment → 🖹 44
4	Set the "Auto dens. corr." parameter to Sensor temperature. Menu path: Expert → Application
5	Perform level adjustment (wet or dry)
6	Result: The measured value output by the Waterpilot corresponds to the level in the deep well corrected by means of the density characteristic line of water.

9.10.2 Automatic density compensation using an integrated Pt100 for calculation in a suitable HART master (e.g. PLC)

Example:

In this example, the FMX21 with an integrated Pt100 is connected via the common communication bus to any temperature head transmitter with HART communication (e.g. TMT182). The temperature and pressure signal is transmitted to the HART master (e.g. PLC), where a corrected level value can be generated using a stored linearization table or density function (of a chosen medium). A pressure signal and a temperature signal can thus be generated with a chosen density function to compensate for a level.

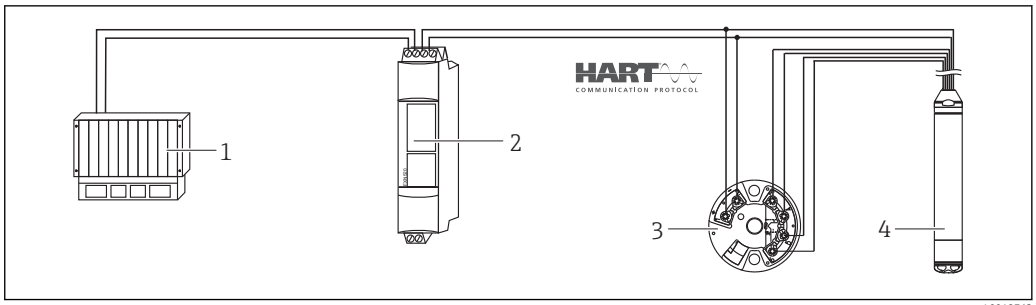

1 *HART master, PLC (programmable logic controller)*
2 *Multidrop Connector FXN520*
3 *TMT182 temperature head transmitter*
4 *Waterpilot FMX21*

	Waterpilot adjustment for level measurement
1	Select the "Level" measuring mode via the "Measuring mode" parameter. Menu path: Setup → Measuring mode **⚠ WARNING** **Changing the measuring mode affects the span (URV)** This situation can result in product overflow. ▶ If the measuring mode is changed, the setting for the span (URV) must be checked in the "Setup" operating menu and readjusted if necessary.
2	Select a pressure unit via the "Press eng. unit" parameter, here "mbar" for example. Menu path: Setup → Press. eng. unit
3	The sensor is unpressurized, perform a position adjustment → 🖹 44
4	Set the output current to "Fixed" 4.0 mA via the "Current Mode" parameter. Menu path: Expert → Communication → HART config
5	Perform level adjustment (wet or dry)
6	Configure an address ≠0 using the "Bus address" parameter, e.g. bus address = 1. (HART 5.0 master: Range 0 to 15, where address = 0 calls up the "Signaling" setting; HART 6.0 master: Range 0 to 63) Menu path: Expert → Communication → HART config ℹ The output current of the temperature head transmitter used must also be set to "Fixed" and have a HART address other than zero (e.g. address = 2).
7	Switch on burst mode via the "Burst mode" parameter. Menu path: Expert → Communication → HART config
8	Result: by balancing the pressure signal and temperature signal in a suitable HART master (e.g. PLC), a corrected level value can be determined for any medium by using a suitable density function.

9.10.3 Automatic density compensation using an external temperature signal for calculation in the FMX21

Example:

In this example, the FMX21 with an integrated Pt100 is connected to a HART-compliant temperature transmitter via the common communication bus. With this option, the signal of the Pt100 is evaluated with a HART-compliant temperature head transmitter (min. HART 5.0) that supports the burst mode. The change in the water density caused by changing temperatures is automatically factored into the level signal by activating the automatic density compensation.

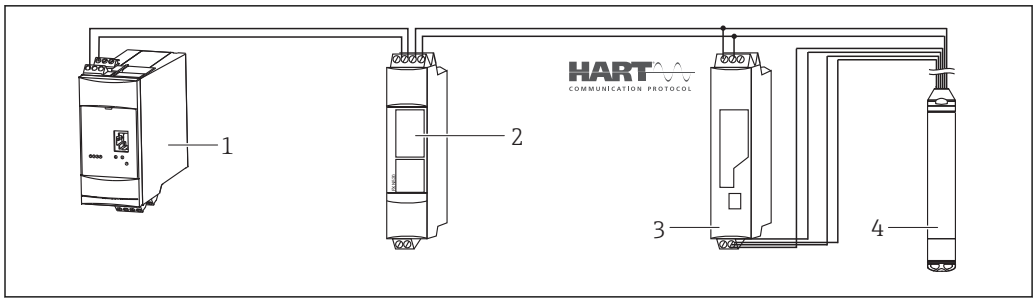

A0018764

1 *Fieldgate FXA520*
2 *Multidrop Connector FXN520*
3 *HART-compatible temperature transmitter (e.g. TMT82)*
4 *Waterpilot FMX21*

	Configuring the HART-compliant temperature head transmitter (min. HART 5.0) with burst function
	The output current of the temperature transmitter used should be set to "Fixed" and a HART address other than zero (e.g. address = 1) must be set. The burst function must then be switched on with HART command 1. This step should be performed before the procedure described below in order to avoid a HART input error of the FMX21 being output during commissioning.
1	Select the "Level" measuring mode via the "Measuring mode" parameter. Menu path: Setup → Measuring mode **⚠ WARNING** **Changing the measuring mode affects the span (URV)** This situation can result in product overflow. ► If the measuring mode is changed, the setting for the span (URV) must be checked in the "Setup" operating menu and readjusted if necessary.
2	Select a pressure unit via the "Press eng. unit" parameter, here "mbar" for example. Menu path: Setup → Press. eng. unit
3	The sensor is unpressurized, perform a position adjustment → 🖹 44
4	Set the "Auto dens. corr." parameter to "External value". Menu path: Expert → Application
5	Perform level adjustment (wet or dry)
	Result: The measured value output by the Waterpilot corresponds to the level in the deep well corrected by means of the density characteristic line of water.

The TMT182 temperature head transmitter is not suitable for this configuration.

9.11 Linearization

9.11.1 Semi-automatic entry of a linearization table

Example:

In this example, the volume in a tank with a conical outlet should be measured in m^3.

Prerequisite:

- The tank can be filled or emptied. The linearization characteristic must rise or fall continuously.
- The "Level" measuring mode has been selected.
- A level calibration has been performed.
- For a description of the parameters mentioned, see the "Description of device parameters" section→ 86.

WARNING

Changing the measuring mode affects the span (URV)

This situation can result in product overflow.

- ▶ If the measuring mode is changed, the setting for the span (URV) must be checked in the "Setup" operating menu and readjusted if necessary.

	Description	
1	Select the "Semiautom. entry" option via the "Lin. mode" parameter. Menu path: Setup → Extended setup → Linearization → Lin. mode	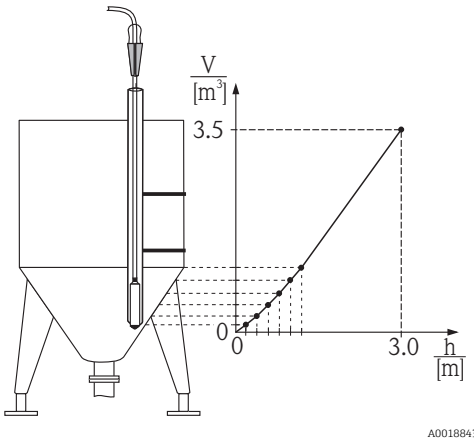 A0018843
2	Select using the "Unit before lin." e.g. m^3. Menu path: Setup → Extended setup → Linearization → Unit after lin.	
3	Fill the tank to the height of the 1st point.	
4	Enter the number of the point in the table using the "Line-numb" parameter e.g. 1. Menu path: Setup → Extended setup → Linearization → Line numb	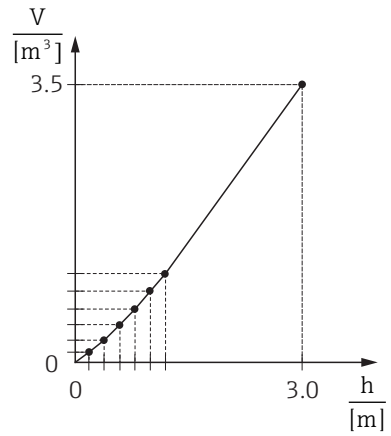 A0031098
	The current level is displayed via the "X-value" parameter. Menu path: Setup → Extended setup → Linearization → X-val	
	Using the "Y-val." parameter, enter the corresponding volume value, here 0 m^3 for example, and confirm the value. Menu path: Setup → Extended setup → Linearization → Y-val	
5	To enter another point in the table, continue filling the tank and select the "Next point" option via the "Edit table" parameter. Enter the next point as explained in Step 4. Menu path: Setup → Extended setup → Linearization → Edit table	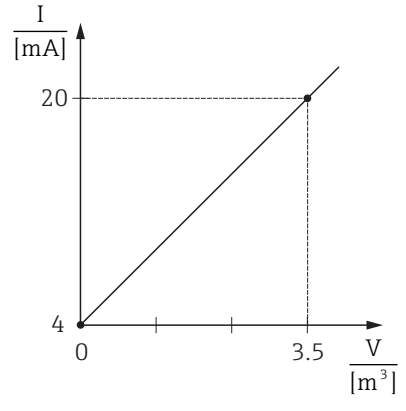 A0031031

	Description	
6	Once all the points have been entered in the table, select the "Activate table" option via the "Lin. mode" parameter. Menu path: Setup → Extended setup → Linearization → Lin. mode	
7	Result: Result: The measured value after linearization is displayed.	

- Error message F510 "Linearization" and alarm current as long as the table is being entered and until the table is activated.
- The lower-range value (= 4mA) is defined by the smallest point in the table. The upper-range value (= 20mA) is defined by the largest point in the table.
- Using the parameters "Set LRV" and "Set URV", you can change the allocation of the volume/mass values to the current values.

9.11.2 Manual entry of a linearization table

Example:

In this example, the volume in a tank with a conical outlet should be measured in m^3.

Prerequisite:

- This is a theoretical calibration, i.e. the points for the linearization table are known.
- The "Level" measuring mode has been selected.
- A level calibration has been performed.
- The linearization characteristic must rise or fall continuously.
- For a description of the parameters mentioned, see the "Description of device parameters" section→ 86.

WARNING

Changing the measuring mode affects the span (URV)

This situation can result in product overflow.

▶ If the measuring mode is changed, the setting for the span (URV) must be checked in the "Setup" operating menu and readjusted if necessary.

	Description	
1	Select the "Manual entry" option via the "Lin. mode" parameter. Menu path: Setup → Extended setup → Linearization → Lin. mode	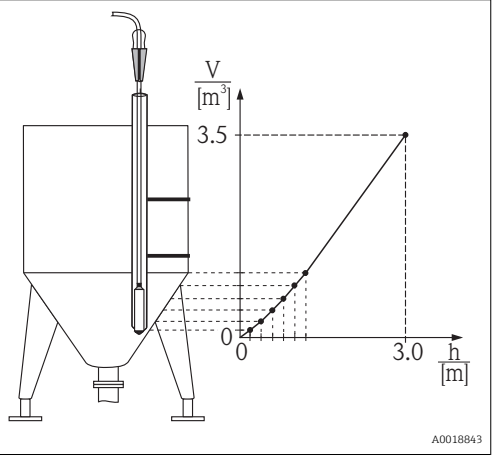
2	Select using the "Unit after lin." e.g. m^3. Menu path: Setup → Extended setup → Linearization → Unit after lin.	

	Description	
3	Enter the number of the point in the table using the "Line-numb" parameter e.g. 1. Menu path: Setup → Extended setup → Linearization → Line numb	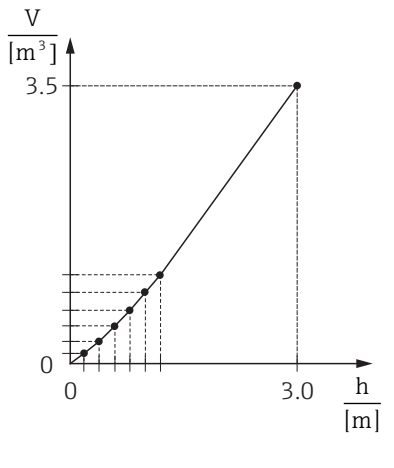 A0031098 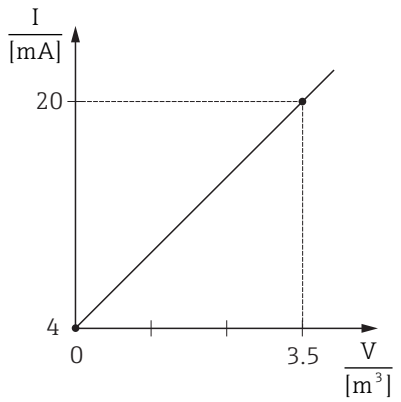 A0031031
	The level is entered via the "X-value" parameter, here 0 m for example. Confirm your entry. Menu path: Setup → Extended setup → Linearization → X-val	
	Using the "Y-val." parameter, enter the corresponding volume value, here 0 m^3 for example, and confirm the value. Menu path: Setup → Extended setup → Linearization → Y-val	
4	To enter another point in the table, select the "Next point" option via the "Edit table" parameter. Enter the next point as explained in Step 3. Menu path: Setup → Extended setup → Linearization → Edit table	
5	Once all the points have been entered in the table, select the "Activate table" option via the "Lin. mode" parameter. Menu path: Setup → Extended setup → Linearization → Lin. mode	
6	Result: Result: The measured value after linearization is displayed.	

- Error message F510 "Linearization" and alarm current as long as the table is being entered and until the table is activated.
- Error message F511/F512 "Linearization" and alarm current as long as the linearization table consists of fewer than 2 points.
- The lower-range value (= 4mA) is defined by the smallest point in the table. The upper-range value (= 20mA) is defined by the largest point in the table.
- Using the parameters "Set LRV" and "Set URV", you can change the allocation of the volume/mass values to the current values.

9.12 Manual entry of a linearization table via operating tool

Using an operating tool based on FDT technology (e.g. FieldCare), you can enter linearization using a module specially designed for this purpose. This provides you with an overview of the selected linearization, even during entry. In addition, it is possible to configure different tank shapes in FieldCare ("Device operation" → "Device functions" → "Additional functions" → "Linearization table" menu).

The linearization table may also be entered manually point by point in the operating tool menu (see Section → 86).

9.13 Backing up or duplicating the device data

The following options are available to you with an operating tool that is based on FDT technology (e.g. FieldCare):
- Storage/recovery of configuration data.
- Duplication of device parameters.
- Transfer of all relevant parameters when replacing electronic inserts.

Use the following parameter for this:

Download select. (visible only in FieldCare)

Navigation Expert → System → Management → Download select.

Write permission Operator/Service engineers/Expert

Description Selection of data packages for up/download function in Fieldcare and PDM.

Prerequisite DIP switch set to "SW" and "Damping" set to "on". If you download using the factory setting "Configuration copy", all parameters required for a measurement will be downloaded. The functionality of the "Electronics replace" setting is reserved for Endress+Hauser Service and can be accessed only if the correct device access code is entered.

Options
- Configuration copy: This option overwrites general configuration parameters with the exception of the serial number, order number, calibration, pos. zero adjust, application and day information.
- Device replacement: This option overwrites general configuration parameters with the exception of the serial number, order number, calibration and position adjustment.
- Electronics replace: This option overwrites general configuration parameters.

Factory setting Configuration copy

9.14 Operation and settings via RIA15

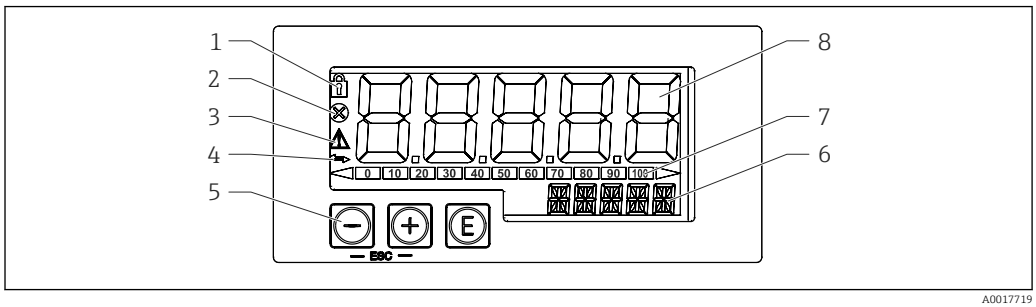

6 Display and operating elements of the process display unit

1 Symbol: operating menu disabled
2 Symbol: error
3 Symbol: warning
4 Symbol: HART communication active
5 Operating keys "-", "+", "E"
6 14-segment display for unit/TAG
7 Bar graph with indicators for under range and over range
8 5-digit 7-segment display for measured value, digit height 17 mm (0.67 in)

The device is operated using three operating keys on the front of the housing. The device setup can be disabled with a 4-digit user code. If the setup is disabled, a padlock symbol appears on the display when an operating parameter is selected.

A0017716	Enter key; calling up the operating menu, confirming the option/setting parameters in the operating menu
A0017715	Selecting and setting/changing values in the operating menu; pressing the '-' and '+' keys simultaneously takes the user back up a menu level. The configured value is not saved.
A0017714	

9.14.1 Operating functions

The operating functions of the process display unit are divided into the following menus. The individual parameters and settings are described in the "Commissioning" section.

If the operating menu is disabled by means of a user code, the individual menus and parameters can be displayed but not changed. To change a parameter, the user code must be entered. As the display unit can only display digits in the 7-segment display and not alphanumeric characters, the procedure for number parameters is different to that for text parameters. If the operating position contains only numbers as parameters, the operating position is displayed in the 14-segment display and the configured parameter is displayed in the 7-segment display. To edit, press the 'E'-button followed by the user code. If the operating position contains text parameters, only the operating position is initially displayed in the 14-segment display. If the 'E' button is pressed again, the configured parameter is displayed in the 14-segment display. To edit, press the '+' button followed by the user code.

Setup (SETUP)	Basic device settings
Diagnostics (DIAG)	Device information, display of error messages
Expert (EXPRT)	Expert settings for device setup. The Expert menu is protected from editing by an access code (default 0000).

9.14.2 Operating modes

The process display unit can be used in two different operating modes:

- 4 to 20 mA mode:
  In this operating mode, the process display unit is incorporated into the 4 to 20 mA current loop and measures the transmitted current. The variable calculated based on the current value and range limits is displayed in digital form on the 5-digit LCD. In addition, the associated unit and a bar graph can be displayed.
- HART mode:
  The display unit is powered via the current loop.
  The FMX21 can be adjusted under the "Level" menu (see operating matrix). The measured value displayed corresponds to the measured level.
  HART communication operates according to the master/slave principle.

For additional information, see BA01170K.

9.14.3 Operating matrix

After power-up:

- Press the E key twice
  - The "Level" menu is then available

Using the following operating matrix, a display in percent can be set. To do this, select "Mode" parameter => 4-20 and "Unit" parameter =>%

Setup -> Level (LEVEL) menu					
The LEVEL menu is only visible if the RIA15 has been ordered with the "Level" option and the display unit is operated in the HART mode (MODE = HART). The basic settings for the Waterpilot FMX21 level sensor can be made via the RIA15 with this menu.					
RIA15 parameter		**Corresponds to parameter of FMX21**	**Values (default=bold)**	**Visible with**	**Description**
LEVEL [1]		Level before linearization		Level option MODE = HART FMX21 connected	This menu contains the parameters for configuring the pressure measuring device for hydrostatic level measurement, FMX21. The basic settings for the FMX21 can be made via the RIA15 with this menu. Once the LEVEL menu item is opened, the following parameters are automatically adjusted for easier operation: ▪ Measuring mode: Level ▪ Calibration mode: Dry ▪ Level selection: In pressure ▪ Lin mode: Linear It is possible to reset these parameters to the factory default settings by performing a reset.
	PUNIT	Press. eng. unit	**mbar** [2] **bar** [2] kPa PSI		Use this function to select the unit for pressure
	LUNIT	Output unit	**%** m inch feet		Use this function to select the unit for level
	TUNIT	Temperature unit	**°C** °F K		Use this function to select the unit for temperature
	ZERO	Pos. zero adjust	**NO** YES	Gauge pressure sensor	For performing a position adjustment (gauge pressure sensor). The value 0.0 is assigned to the pressure value present. The current value is also corrected.
	P_LRV	Empty pressure	-1999.9 to 9999.9 Default: Gauge pressure sensor: Sensor LRL Absolute pressure sensor: 0		Pressure empty calibration using keys -,+,E More in-depth description / valid value range: any value in the range indicated [1] [3] Number of decimal places depends on the configured pressure unit.
	P_URV	Full pressure	-1999.9 ... 9999.9 Default: Sensor URL		Pressure full calibration using keys -,+,E More in-depth description / valid value range: any value in the range indicated [1] [3] Number of decimal places depends on the configured pressure unit.
	EMPTY	Empty calib.	-1999.9 to 9999.9 Default: 0		Level empty calibration using keys -,+, E More in-depth description / valid value range: any value in the range indicated [1] [3] Number of decimal places depends on the configured level unit.
	FULL	Full calib.	-1999.9 ... 9999.9 Default: 100		Level full calibration using keys -,+, E More in-depth description / valid value range: any value in the range indicated [1] [3] Number of decimal places depends on the configured level unit.

Setup -> Level (LEVEL) menu					
The LEVEL menu is only visible if the RIA15 has been ordered with the "Level" option and the display unit is operated in the HART mode (MODE = HART). The basic settings for the Waterpilot FMX21 level sensor can be made via the RIA15 with this menu.					
RIA15 parameter		**Corresponds to parameter of FMX21**	**Values (default=bold)**	**Visible with**	**Description**
	LEVEL	Level before linearization	Measured value		Displays the measured level Number of decimal places depends on the configured level unit.
	RESET	Enter reset code	**NO** YES		Reset the FMX21 to factory defaults

1) If the measured value that is read out is too large, it is displayed as "9999.9", for example. To display a valid measured value, the pressure unit (PUNIT) (or level unit (LUNIT)) must be set to suit the measuring range.
2) Default: depends on the sensor nominal range or as per order specifications
3) The values entered for "Empty calib./Full calib.", "Empty pressure/Full pressure" and "Set LRV/Set URV" must be at least 1% apart. The value will be rejected, and a message displayed, if the values are too close together. Further limit values are not checked, i.e. the values entered must be appropriate for the sensor module and the measuring task for the device to be able to measure correctly.

Any additional settings such as linearizations must be made using FieldCare or DeviceCare.

Additional information is available in the RIA15 Operating Instructions BA01170K.

10 Diagnostics and troubleshooting

10.1 Troubleshooting

General errors

Error	Possible cause	Solution
Device is not responding.	Supply voltage does not match the specification on the nameplate.	Apply correct voltage.
	Supply voltage has incorrect polarity.	Reverse polarity of supply voltage.
	Connecting cables are not in contact with the terminals.	Check the connection of the cables and correct if necessary.
Output current < 3.6 mA	Signal line is not wired correctly. Electronics unit is defective.	Check wiring.
Device measures incorrectly.	Configuration error.	Check and correct parameter configuration (see below).
HART communication is not working.	Communication resistor missing or incorrectly installed.	Install the communication resistor (250 Ω) correctly.
	Commubox is connected incorrectly.	Connect Commubox correctly.
	Commubox is not set to "HART".	Set Commubox selector switch to "HART".
RIA15 no display	The polarity of the supply voltage is wrong	Correct the polarity
RIA15 no display	The cables do not contact the terminals properly	Ensure electrical contact between the cable and the terminal
RIA15 no display	RIA15 defective	Replace RIA15
RIA15 start sequence keeps running through	Supply voltage too low	▪ Increase supply voltage ▪ Switch off backlight

10.2 Diagnostic events in the operating tool

10.2.1 Diagnostic message

Faults detected by the self-monitoring system of the measuring device are displayed as a diagnostic message in alternation with the measured value display.

Status signals

The table → 📄 71 lists the messages that may occur. The ALARM STATUS parameter shows the message with the highest priority. The device has four different status information codes according to NE107:

F A0013956	**"Failure"** A device error has occurred. The measured value is no longer valid.
M A0013957	**"Maintenance required"** Maintenance is required. The measured value remains valid.
C A0013959	**"Function check"** The device is in service mode (e.g. during a simulation).
S A0013958	**"Out of specification"** The device is being operated: ▪ Outside its technical specifications (e.g. during warm-up or cleaning). ▪ Outside of the configuration carried out by the user (e.g. level outside configured span)

Diagnostic event and event text

The fault can be identified by means of the diagnostic event.

The event text helps you by providing information on the fault.

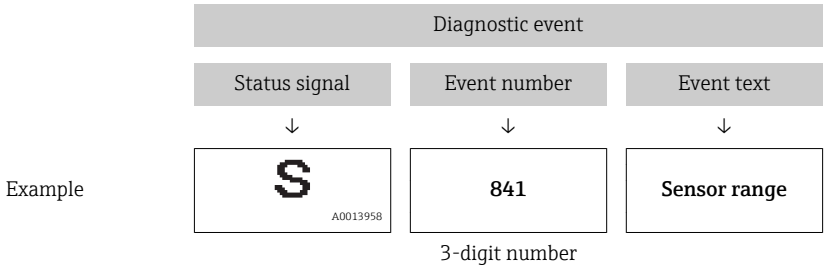

If two or more diagnostic events are pending simultaneously, only the diagnostic message with the highest priority is shown.

Other diagnostic messages that are pending can be viewed in the **Diagnostic list** submenu → 120.

Past diagnostic messages that are no longer pending are shown in the **Event logbook** submenu→ 121.

10.2.2 Diagnostic event in the RIA15

A diagnostic event of the Waterpilot FMX21 is not directly shown in the RIA15. The fault F911 only appears directly on the RIA15 in the event of an Waterpilot FMX21 alarm.

Displaying a FMX21 diagnostic event in the RIA15

1. Navigate to: DIAG/TERR
2. Press E
3. Press ⊕
4. Press E
5. Press ⊕ 3 times
6. Press E
   ↳ The diagnostic event from the Waterpilot FMX21 is shown on the RIA15 display.

10.2.3 List of diagnostic events

General messages

Diagnostic event		Reason	Corrective measure
Code	Description		
0	No error	-	-

"F" messages

Diagnostic event		Reason	Corrective measure
Code	Description		
F002	Sensor unknown	Sensor does not suit the device (electronic sensor nameplate).	Contact Endress+Hauser Service
F062	Sensor conn.	▪ Faulty sensor. ▪ Electromagnetic effects are greater than specifications in the technical data. This message appears for a short time only.	▪ Check the sensor module cable ▪ Contact Endress+Hauser Service
F081	Initialization	▪ Faulty sensor. ▪ Electromagnetic effects are greater than specifications in the technical data. This message appears for a short time only.	▪ Check sensor cable ▪ Contact Endress+Hauser Service
F083	Memory content	▪ Faulty sensor. ▪ Electromagnetic effects outside the permitted range. This message appears for a short time only.	▪ Restart the device ▪ Contact Endress+Hauser Service
F140	Working range P	▪ Overpressure and low pressure present. ▪ Electromagnetic effects outside the permitted range. ▪ Faulty sensor.	▪ Check the process pressure ▪ Check sensor range
F261	Electronic module	▪ Main electronics defective. ▪ Fault in the main electronics.	Restart the device
F282	Memory	▪ Fault in the main electronics. ▪ Main electronics defective.	Restart the device
F283	Memory content	▪ Main electronics defective. ▪ Electromagnetic effects are greater than specifications in the technical data. ▪ The supply voltage is disconnected when writing. ▪ An error occurred when writing.	Perform a reset
F411	Up-/download	▪ File is defective. ▪ During the download, the data are not correctly transmitted to the processor, e.g. because of open cable connections, spikes (ripple) on the supply voltage or electromagnetic effects.	▪ Repeat download ▪ Use other file ▪ Perform a reset
F510	Linearization	The linearization table is being edited.	▪ Conclude entries ▪ Select "linear"
F511	Linearization	The linearization table consists of less than 2 points.	▪ Table too small ▪ Correct table ▪ Activate table
F512	Linearization	The linearization table is not monotonic increasing or decreasing.	▪ Table not monotonic ▪ Correct table ▪ Activate table
F841	Sensor range	▪ Overpressure or low pressure present. ▪ Faulty sensor.	▪ Check the pressure value ▪ Contact Endress+Hauser Service
F882	Input signal	External measured value is not received or displays a failure status.	▪ Check the bus ▪ Check source device ▪ Check the setting

"M" messages

Diagnostic event		Reason	Corrective measure
Code	Description		
M002	Sens. unknown	Sensor does not suit the device (electronic sensor nameplate). Device continues measuring.	Contact Endress+Hauser Service
M283	Memory content	▪ Cause as indicated for F283. ▪ Correct measurement can continue as long as you do not need the peakhold indicator function.	Perform a reset
M431	Adjustment	The calibration performed would cause the sensor nominal range to be exceeded or undershot.	▪ Check the measuring range ▪ Check position adjustment ▪ Check the setting
M434	Scaling	▪ Values for calibration (e.g. lower range value and upper range value) are too close together. ▪ Lower-range value and/or upper-range value exceed or fall below the range limits of the sensor. ▪ The sensor was replaced and the customer-specific configuration does not suit the sensor module. ▪ Unsuitable download carried out.	▪ Check the measuring range ▪ Check the setting ▪ Contact Endress+Hauser Service
M438	Data set	▪ The supply voltage is disconnected when writing. ▪ An error occurred when writing.	▪ Check the setting ▪ Restart the device
M882	Input signal	External measured value displays a warning status.	▪ Check the bus ▪ Check the source device ▪ Check the setting

"C" messages

Diagnostic event		Reason	Corrective measure
Code	Description		
C412	Backup in prog.	Downloading.	Wait for download to complete.
C482	Simul. output	Simulation of the current output is switched on, i.e. the device is not measuring at present.	End the simulation
C484	Error simul.	Fault state simulation is switched on, i.e. the device is not measuring at present.	End the simulation
C485	Measure simul.	Simulation is switched on, i.e. the device is not measuring at present.	End the simulation
C824	Process pressure	▪ Overpressure or low pressure present. ▪ Electromagnetic effects outside the permitted range. This message appears for a short time only.	▪ Check the pressure value ▪ Restart the device ▪ Perform a reset

"S" messages

Diagnostic event		Reason	Corrective measure
Code	Description		
S110	Operational range T	▪ High temperature or low temperature present. ▪ Electromagnetic effects outside the permitted range. ▪ Faulty sensor.	▪ Check process temperature ▪ Check the temperature range
S140	Working range P LP/HP	▪ Overpressure or low pressure present. ▪ Electromagnetic effects outside the permitted range. ▪ Faulty sensor.	▪ Check the process pressure ▪ Check sensor range

Diagnostic event		Reason	Corrective measure
Code	Description		
S822	Process temp. LP/HP	▪ The temperature measured in the sensor is higher than the upper nominal temperature of the sensor. ▪ The temperature measured in the sensor is lower than the lower nominal temperature of the sensor.	▪ Check temperature ▪ Check the setting
S841	Sensor range	▪ Overpressure or low pressure present. ▪ Faulty sensor.	▪ Check the pressure value ▪ Contact Endress+Hauser Service
S971	Adjustment	▪ The current is outside the permitted range from 3.8 to 20.5 mA. ▪ The present pressure value is outside the configured measuring range (but within the sensor module range, if applicable). ▪ The calibration performed would cause the sensor nominal range to be exceeded or undershot.	▪ Check the pressure value ▪ Check the measuring range ▪ Check the setting

10.3 Troubleshooting specific to Waterpilot FMX21 with optional Pt100

Error description	Reason	Corrective action
No measuring signal	4 to 20 mA cable not connected correctly	Connect device as per → 🖹 26.
	No power supplied via the 4 to 20 mA cable	Check current loop.
	Supply voltage too low (min. 10.5 V DC)	▪ Check supply voltage. ▪ Overall resistance greater than max. load resistance
	Waterpilot is defective	Replace the Waterpilot.
Temperature measured value is inaccurate/incorrect (only for Waterpilot FMX21 with Pt100)	Pt100 connected in 2-wire circuit, cable resistance was not compensated for	▪ Compensate the cable resistance. ▪ Connect Pt100 as 3-wire or 4-wire circuit.

10.4 Troubleshooting specific to TMT182 temperature head transmitter

Error description	Reason	Corrective action
No measuring signal	4 to 20 mA cable not connected correctly	Connect device as per → 🖹 26.
	No power supplied via the 4 to 20 mA cable	Check current loop.
	Supply voltage too low (min. 10.5 V DC)	▪ Check supply voltage. ▪ Overall resistance greater than max. load resistance
Failure current ≤ 3.6 mA or ≥ 21 mA	Pt100 not connected correctly	Connect device as per → 🖹 26.
	4 to 20 mA cable not connected correctly	Connect device as per → 🖹 26.
	Pt100 resistance thermometer defective	Replace the Waterpilot.

Error description	Reason	Corrective action
	Temperature head transmitter defective	Replace the temperature head transmitter.
Measured value is inaccurate/ incorrect	Pt100 connected in 2-wire circuit, cable resistance was not compensated for (for more information see BA00139R)	▪ Compensate the cable resistance. ▪ Connect Pt100 as 3-wire or 4-wire circuit.

10.5 Response of output to errors

The behavior of the current output in case of fault is defined by the following parameters:

- "Alarm behav. P (050)"
- "Output fail mode (190)"
- "Max. alarm curr. (052)"

10.6 Firmware history

Date	Firmware version	Modifications	Documentation
05.2009	01.00.zz	Original firmware. Compatible with: ▪ FieldCare version 2.02.00 and higher ▪ Field Communicator DXR375 with Device Rev.: 1, DD Rev.: 1	BA00380P/00/EN/03.09
			BA00380P/00/EN/07.09
			BA00380P/00/EN/08.09
			BA00380P/00/EN/13.11
			BA00380P/00/EN/14.13
			BA00380P/00/EN/15.15
			BA00380P/00/EN/16.16
			BA00380P/00/EN/17.16
			BA00380P/00/EN/18.18

11 Maintenance

- Terminal box: Keep the GORE-TEX® filter free from contamination
- FMX21 extension cable: Keep the Teflon filter in the pressure compensation tube free from contamination
- Check the process isolating diaphragm for buildup at suitable intervals.

11.1 Exterior cleaning

Please note the following points when cleaning the device:

- The cleaning agents used should not corrode the surface and the seals.
- Mechanical damage to the process isolating diaphragm, e.g. due to sharp objects, must be avoided.
- Only clean the terminal box with water or with a cloth dampened with very diluted ethanol.

12 Repairs

12.1 General notes

12.1.1 Repair concept

Repairs are not possible.

12.1.2 Replacing a device

Once a complete device has been replaced, the parameters can be transferred back into the device using FieldCare:

Prerequisite: The configuration of the old device was saved previously to the computer using FieldCare.

You can continue to measure without performing a new calibration.

12.2 Spare parts

All the spare parts for the measuring device along with the order code are listed In the *W@M Device Viewer* (www.endress.com/deviceviewer) and can be ordered. If available, users can also download the associated Installation Instructions.

Measuring device serial number:
- Is located on the nameplate of the device.
- Can be read out via the "Serial number" parameter in the "Instrument info" submenu.

12.3 Return

The measuring device must be returned in the event of a factory calibration, or if the wrong device has been ordered or delivered.

As an ISO-certified company and also due to legal regulations, Endress+Hauser is obliged to follow certain procedures when handling any returned products that have been in contact with medium. To ensure swift, safe and professional device returns, please read the return procedures and conditions on the Endress+Hauser website at www.services.endress.com/return-material

▶ Select country.
  ↳ The web site of the responsible sales office opens with all of the relevant information relating to returns.

1. If the desired country is not listed:
   Click on the "Choose your location" link.
   ↳ An overview of Endress+Hauser sales offices and representatives opens.
2. Contact your Endress+Hauser sales office or representative.

12.4 Disposal

When disposing, separate and recycle the device components based on the materials.

13 Overview of the operating menu

Depending on the parameter configuration, not all submenus and parameters are available. Information on this can be found in the parameter description under "Prerequisite".

Setup	Description
Operating mode	→ 89
Press. eng. unit	→ 91
Corrected press.	→ 93
Pos. zero adjust (relative pressure sensor)	→ 90
Calib. offset (absolute pressure sensor)	→ 90
Empty calib. ("Level" measuring mode and "Calibration mode" = wet)	→ 95
Full calib. ("Level" measuring mode and "Calibration mode" = wet")	→ 96
Set LRV ("Pressure" measuring mode)	→ 92
Set URV ("Pressure" measuring mode)	→ 92
Damping	→ 90
Level before Lin ("Level" measuring mode)	→ 98
Pressure af.damp	→ 93

Setup →	Extended setup	Description
	Code definition	→ 86
	Device tag	→ 87
	Operator code	→ 86

Setup →	Extended setup →	Level ("Level" measuring mode)	Description
		Level selection	→ 94
		Output unit	→ 94
		Height unit	→ 94
		Calibration mode	→ 95
		Empty calib.	→ 95
		Empty pressure	→ 95
		Empty height	→ 96
		Full calib.	→ 96
		Full pressure	→ 96
		Full height	→ 97
		Adjust density	→ 97
		Process density	→ 98
		Level before lin	→ 98

Setup →	Extended setup →	Linearization	Description
		Lin. mode	→ 99
		Unit after lin.	→ 99
		Line-numb:	→ 99

Setup →	Extended setup →	Linearization	Description
		X-val	→ 100
		Y-val	→ 100
		Edit table	→ 100
		Tank description	→ 101
		Tank content	→ 101

Setup →	Extended setup →	Current output	Description
		Alarm behav. P	→ 104
		Output fail mode	→ 104
		Max. alarm curr.	→ 104
		Set min. current	→ 105
		Output current	→ 104
		Get LRV (only "Pressure")	→ 105
		Set LRV	→ 105
		Get URV (only "Pressure")	→ 105
		Set URV	→ 106

Diagnosis	Description
Diagnostic code	→ 118
Last diag. code	→ 118
Min. meas. press.	→ 118
Max. meas. press.	→ 118

Diagnosis →	Diagnostics List	Description
	Diagnostic 1	→ 120
	Diagnostic 2	→ 120
	Diagnostic 3	→ 120
	Diagnostics 4	→ 120
	Diagnostics 5	→ 120
	Diagnostics 6	→ 120
	Diagnostics 7	→ 120
	Diagnostics 8	→ 120
	Diagnostics 9	→ 120
	Diagnostics 10	→ 120

Diagnosis →	Event logbook	Description
	Last diag. 1	→ 121
	Last diag. 2	→ 121
	Last diag. 3	→ 121
	Last diag. 4	→ 121
	Last diag. 5	→ 121
	Last diag. 6	→ 121

Diagnosis →	Event logbook	Description
	Last diag. 7	→ 121
	Last diag. 8	→ 121
	Last diag. 9	→ 121
	Last diag. 10	→ 121

Diagnosis →	Instrument Info	Description
	Firmware Version	→ 87
	Serial number	→ 87
	Ext. order code	→ 87
	Order Identifier	→ 88
	Cust. tag number	→ 87
	Device tag	→ 87
	ENP version	→ 88
	Config. counter	→ 119
	LRL sensor	→ 102
	URL sensor	→ 102
	Manufacturer ID	→ 110
	Device type code	→ 110
	Device revision	→ 110

Diagnosis →	Measured values	Description
	Level before lin	→ 98
	Tank content	→ 101
	Pressure measured	→ 92
	Sensor pressure	→ 92
	Corrected press.	→ 93
	Pressure af.damp	→ 93
	Sensor temp.	→ 91

Diagnosis →	Simulation	Description
	Simulation mode	→ 122
	Sim. pressure	→ 122
	Sim. level	→ 122
	Sim. tank cont.	→ 123
	Sim. current	→ 123
	Sim. alarm/warning	→ 123

Diagnosis →	Enter reset code	Description
	Enter reset code	→ 89

13.1 Overview of parameters in the "Expert" menu

The following table lists all of the parameters that can be included in the "Expert" menu. The page reference indicates where a description of the parameter can be found in the manual.

Depending on the device version and the parameter configuration, not all submenus and parameters are available in every device. Information on this can be found in the parameter description under "Prerequisite".

Expert →	System	Description
	Code definition	→ 86
	Operator code	→ 86

Expert →	System→	Instrument Info	Description
		Cust. tag number	→ 87
		Device tag	→ 87
		Serial number	→ 87
		Firmware Version	→ 87
		Ext. order code	→ 87
		Order Identifier	→ 88
		ENP version	→ 88
		Electr.Serial No	→ 88
		Sensor serial no.	→ 88

Expert →	System→	Administration	Description
		Enter reset code	→ 89

Expert →	Measurement	Description
	Operating mode	→ 89

Expert →	Measurement→	Basic Setup	Description
		Pos. zero adjust	→ 90
		Calib. Offset	→ 90
		Damping	→ 90
		Press. eng. unit	→ 91
		Temp. Eng. Unit	→ 91
		Sensor temp.	→ 91

Expert →	Measurement→	Pressure	Description
		Set LRV	→ 92
		Set URV	→ 92
		Pressure measured	→ 92
		Sensor pressure	→ 92
		Corrected press.	→ 93
		Pressure af.damp	→ 93

Expert →	Measurement→	Level	Description
		Level selection	→ 94
		Output unit	→ 94
		Height unit	→ 94
		Calibration mode	→ 95
		Empty calib.	→ 95
		Empty pressure	→ 95
		Empty height	→ 96
		Full calib.	→ 96
		Full pressure	→ 96
		Full height	→ 97
		Density unit	→ 97
		Adjust density	→ 97
		Process density	→ 98
		Level before lin.	→ 98

Expert →	Measurement→	Linearization	Description
		Lin. mode	→ 99
		Unit after lin.	→ 99
		Line-numb:	→ 99
		X-val	→ 100
		Y-val	→ 100
		Edit table	→ 100
		Tank description	→ 101
		Tank content	→ 101

Expert →	Measurement→	Sensor limits	Description
		Lower range limit	→ 102
		URL sensor	→ 102

Expert →	Measurement→	Sensor trim	Description
		Lo trim measured	→ 103
		Hi trim measured	→ 103
		Lo Trim Sensor	→ 103
		Hi Trim Sensor	→ 103

Expert →	Output→	Current output	Description
		Output current	→ 104
		Alarm behav. P	→ 104
		Output fail mode	→ 104
		Max. alarm curr.	→ 104
		Set min. current	→ 105

Expert →	Output→	Current output	Description
		Get LRV ("Pressure" only)	→ 105
		Set LRV	→ 105
		Get URV ("Pressure" only)	→ 105
		Set URV	→ 106
		Startcurrent	→ 106
		Curr. Trim 4 mA	→ 106
		Curr. Trim 20 mA	→ 107
		Offset Trim 4 mA	→ 107
		Offset Trim 20 mA	→ 107

Expert →	Communication→	HART Config	Description
		Burst Mode	→ 108
		Burst Option	→ 108
		Current Mode	→ 108
		Bus Address	→ 108
		Preamble Number	→ 109

Expert →	Communication→	HART Info	Description
		Device type code	→ 110
		Device revision	→ 110
		Manufacturer ID	→ 110
		HART version	→ 110
		Descriptor	→ 110
		HART Message	→ 110
		HART Date	→ 111

Expert →	Communication→	HART Output	Description
		Primary value is	→ 112
		Primary value	→ 112
		Secondary val. is	→ 112
		Secondary value	→ 112
		Third value is	→ 113
		Third value	→ 113
		4th value is	→ 113
		4th value	→ 114

Expert →	Communication→	HART Input	Description
		HART input val.	→ 115
		HART input stat.	→ 115

Expert →	Communication→	HART Input	Description
		HART input unit	→ 115
		HART input form.	→ 115

Expert →	Application		Description
		Electr. Delta P	→ 117
		Fixed ext. value	→ 117
		Auto dens. corr.	→ 117

Expert →	Diagnosis	Description
	Diagnostic code	→ 118
	Last diag. code	→ 118
	Reset Logbook	→ 118
	Min. meas. press.	→ 118
	Max. meas. press.	→ 118
	Reset Peakhold	→ 119
	Operating hours	→ 119
	Config. counter	→ 119

Expert →	Diagnosis→	Diagnostics List	Description
		Diagnostic 1	→ 120
		Diagnostic 2	→ 120
		Diagnostic 3	→ 120
		Diagnostics 4	→ 120
		Diagnostics 5	→ 120
		Diagnostics 6	→ 120
		Diagnostics 7	→ 120
		Diagnostics 8	→ 120
		Diagnostics 9	→ 120
		Diagnostics 10	→ 120

Expert →	Diagnosis→	Event logbook	Description
		Last diag. 1	→ 121
		Last diag. 2	→ 121
		Last diag. 3	→ 121
		Last diag. 4	→ 121
		Last diag. 5	→ 121
		Last diag. 6	→ 121
		Last diag. 7	→ 121
		Last diag. 8	→ 121
		Last diag. 9	→ 121
		Last diag. 10	→ 121

Expert →	Diagnosis→	Simulation	Description
		Simulation mode	→ 122
		Sim. pressure	→ 122
		Sim. level	→ 122
		Sim. tank cont.	→ 123
		Sim. current	→ 123
		Sim. alarm/warning	→ 123

14 Description of device parameters

14.1 Expert → System

Operator code

Write permission Operators/Service engineers/Expert

Description Use this function to enter a code to lock or unlock operation.

User entry
- To lock: Enter a number ≠ the release code (value range: 1 to 9999).
- To unlock: Enter the release code.

Note The release code is "0" in the order configuration. Another release code can be defined in the "Code definition" parameter. If the user has forgotten the release code, the release code can be visible by entering the number "5864".

Factory setting 0

Code definition

Write permission Operators/Service engineers/Expert

Description Use this function to enter a release code with which the device can be unlocked.

Options A number from 0 to 9999

Factory setting 0

14.2 Expert → System → Instrument info

Cust. tag number

Write permission Operators/Service engineers/Expert

Description Enter the device tag, e.g. TAG number (max. 8 alphanumeric characters).

Factory setting No entry or according to order specifications

Device tag

Write permission Operators/Service engineers/Expert

Description Enter the device tag, e.g. TAG number (max. 32 alphanumeric characters).

Factory setting No entry or according to order specifications

Serial number

Write permission Parameter is read only. Only Endress+Hauser Service has write permission.

Description Displays the serial number of the device (11 alphanumeric characters).

Firmware Version

Write permission No write permissions. Parameter is read only.

Description Displays the firmware version.

Ext. order code

Write permission Parameter is read only. Only Endress+Hauser Service has write permission.

Description Displays extended order number.

Factory setting According to order specifications

Order identifier

Write permission Parameter is read only. Only Endress+Hauser Service has write permission.

Description Displays the order identifier.

Factory setting According to order specifications

ENP version

Write permission No write permissions. Parameter is read only.

Description Displays the ENP version
(ENP = electronic nameplate)

Electr.serial no.

Write permission No write permissions. Parameter is read only.

Description Displays the serial number of the main electronics (11 alphanumeric characters).

Sensor serial no.

Write permission No write permissions. Parameter is read only.

Description Displays the serial number of the main electronics (11 alphanumeric characters).

14.3 Expert → System → Management

Enter reset code

Write permission Operators/Service engineers/Expert

Description Reset parameters completely or partially to the factory values or order configuration by entering a reset code, see "Resetting to factory settings (reset)" section.→ 39

Factory setting 0

14.4 Expert → Measurement → Measuring mode

Measuring mode

WARNING

Changing the measuring mode affects the span (URV)
This situation can result in product overflow.
- If the measuring mode is changed, the setting for the span (URV) must be checked in the "Setup" operating menu and readjusted if necessary.

Write permission Operators/Service engineers/Expert

Description Select the measuring mode. The operating menu is structured differently depending on the measuring mode selected.

Options
- Pressure
- Level

Factory setting Pressure or according to order specifications

14.5 Expert → Measurement → Basic setup

Pos. zero adjust

Write permission Operators/Service engineers/Expert

Description Position adjustment – the pressure difference between zero (set point) and the measured pressure need not be known.

Example
- Measured value = 2.2 mbar (0.033 psi)
- You correct the measured value via the "Pos. zero adjust" parameter with the "Confirm" option. This means that you are assigning the value 0.0 to the pressure present.
- Measured value (after position adjustment) = 0.0 mbar
- The current value is also corrected.

Options
- Confirm
- Cancel

Factory setting Cancel

Calib. offset

Write permission Service engineers/Expert

Description Position adjustment – the pressure difference between the set point and the measured pressure must be known.

Example
- Measured value = 982.2 mbar (14.73 psi)
- You correct the measured value with the value entered (e.g. 2.2 mbar (0.033 psi)) via the "Calib. Offset" parameter. This means that you are assigning the value 980.0 (14.7 psi) to the pressure present.
- Measured value (after pos. zero adjust) = 980.0 mbar (14.7 psi)
- The current value is also corrected.

Factory setting 0.0

Damping

Write permission Operators/Service engineers/Expert
(if the "Damping" DIP switch is set to "on")

Description Enter damping time (time constant τ).
The damping affects the speed at which the measured value reacts to changes in pressure.

Input range 0.0 to 999.0 s

Factory setting 2.0 sec. or according to order specifications

Press. eng. unit

Write permission Operators/Service engineers/Expert

Description Select the pressure engineering unit. If a new pressure engineering unit is selected, all pressure-specific parameters are converted and displayed with the new unit.

Options
- mbar, bar
- mmH2O, mH2O, inH2O
- ftH2O
- Pa, kPa, MPa
- psi
- mmHg, inHg
- kgf/cm^2

Factory setting mbar or bar depending on the nominal measuring range of the sensor module, or as per order specifications

Temp. eng. unit

Write permission Service engineers/Expert

Description Select the unit for the temperature measured values.

Options
- °C
- °F
- K

Note The setting affects the unit for the "Sensor temp." parameter.

Factory setting °C

Sensor temp.

Write permission No write permissions. Parameter is read only.

Description Displays the temperature currently measured in the sensor module. This can deviate from the process temperature.

14.6 Expert → Measurement → Pressure

Set LRV

Write permission Operators/Service engineers/Expert

Description Set the pressure value, level or content for the lower current value (4 mA).

Factory setting
- 0.0 % in Level measuring mode
- 0.0 mbar/bar or in accordance with ordering information in Pressure measuring mode

Set URV

Write permission Operators/Service engineers/Expert

Description Set the pressure value, level or content for the upper current value (20 mA).

Factory setting
- 100.0 % in Level measuring mode
- URL Sensor or according to ordering information in Pressure measuring mode

Meas. pressure

Write permission No write permissions. Parameter is read only.

Description Displays the measured pressure after sensor trim, position adjustment and damping.

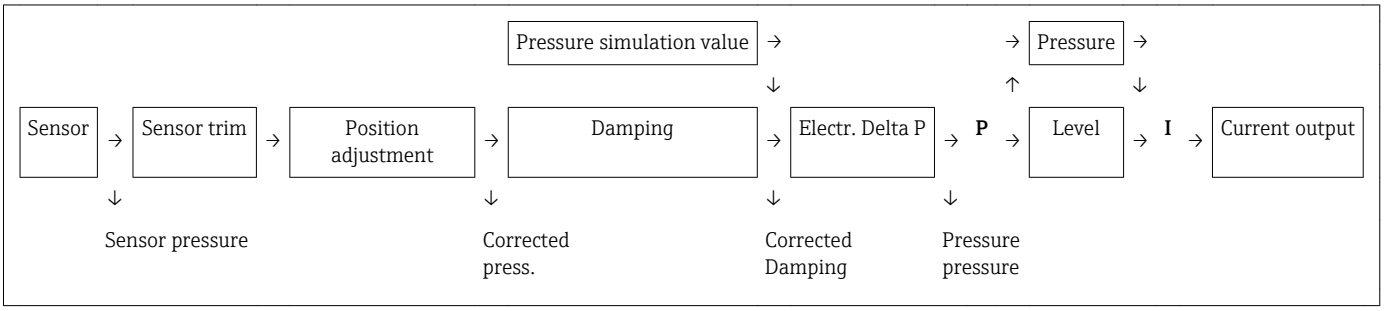

Sensor pressure

Write permission No write permissions. Parameter is read only.

Description Displays the measured pressure before the sensor trim.

Corrected press.

Write permission No write permissions. Parameter is read only.

Description Displays the measured pressure after sensor trim and position adjustment.

Pressure af.damp

Write permission No write permissions. Parameter is read only.

Description Displays the measured pressure after sensor trim, position adjustment and damping.

14.7 Expert → Measurement → Level

Level selection

Write permission Operators/Service engineers/Expert

Description Select the method for calculating the level

Options
- In pressure
  If this option is selected, specify two pressure/level value pairs. The level value is displayed directly in the unit that you select via the "Output unit" parameter.
- In height
  If this option is selected, specify two height/level value pairs. From the measured pressure, the device first calculates the height using the density. This information is then used to calculate the level in the "Output unit" selected using the two value pairs specified.

Factory setting In pressure

Output unit

Description Select the unit for the measured value display for the level before linearization.

Note The selected unit is used only to describe the measured value i.e. when a new output unit is selected, the measured value is not converted.

Example
- Current measured value: 0.3 ft
- New output unit: m
- New measured value: 0.3 m

Options
- %
- mm, cm, dm, m
- ft, inch
- m^3, in^3
- l, hl
- ft^3
- gal, Igal
- kg, t
- lb

Factory setting %

Height unit

Write permission Operators/Service engineers/Expert

Description Select the height unit. The measured pressure is converted to the selected height unit using the "Adjust Density" parameter.

Prerequisite "Level selection" = "In height"

Options
- mm
- m
- in
- ft

Factory setting m

Calibration mode

Write permission Operators/Service engineers/Expert

Description Select the calibration mode.

Options
- Wet
  Wet calibration takes place by filling and emptying the vessel. In the case of two different levels, the level, volume, mass or percentage value entered is assigned to the pressure measured at this point in time ("Empty calib." and "Full calib." parameters).
- Dry
  Dry calibration is a theoretical calibration. For this calibration, you specify two pressure-level value pairs or height-level value pairs via the following parameters: "Empty calib.", "Empty pressure", "Empty height", "Full calib.", "Full pressure", "Full height".

Factory setting Wet

Empty calib.

Write permission Operators/Service engineers/Expert

Description Enter the output value for the lower calibration point (vessel is empty). The unit defined in "Output unit" must be used.

Note
- In the case of wet calibration, the level (e.g. vessel empty or partially filled) must actually be available. The associated pressure is then automatically recorded by the device.
- In the case of dry calibration, the level (vessel empty) does not have to be available. For the "In pressure" level selection, the associated pressure must be entered in the "Empty pressure" parameter. The associated height must be entered in the "Empty height" parameter for the "In height" level selection.

Factory setting 0.0

Empty pressure

Write permission Operators/Service engineers/Expert

Description Enter the pressure value for the lower calibration point (vessel empty). See also "Empty calib.".

Prerequisite
- "Level selection" = In pressure
- "Calibration mode" = Dry -> entry
- "Calibration mode" = Wet -> display

Factory setting 0.0

Empty height

Write permission Operators/Service engineers/Expert

Description Enter the height value for the lower calibration point (vessel empty). The unit is selected via the "Height unit" parameter.

Prerequisite
- "Level selection" = "In height"
- "Calibration mode" = Dry -> entry
- "Calibration mode" = Wet -> display

Factory setting 0.0

Full calib.

Write permission Operators/Service engineers/Expert

Description Enter the output value for the upper calibration point (vessel full). The unit defined in "Output unit" must be used.

Note
- In the case of wet calibration, the level (e.g. vessel full or partially filled) must actually be available. The associated pressure is then automatically recorded by the device.
- In the case of dry calibration, the level (vessel full) does not have to be available. For the "In pressure" level selection, the associated pressure must be entered in the "Full pressure" parameter. The associated height has to be entered in the "Full height" parameter for the "In height" level selection.

Factory setting 100.0

Full pressure

Write permission Operators/Service engineers/Expert

Description Enter the pressure value for the upper calibration point (vessel full). See also "Full calib.".

Prerequisite
- "Level selection" = In pressure
- "Calibration mode" = Dry -> entry
- "Calibration mode" = Wet -> display

Factory setting URL of the sensor module

Full height

Write permission Operators/Service engineers/Expert

Description Enter the height value for the upper calibration point (vessel full). The unit is selected via the "Height unit" parameter.

Prerequisite
- "Level selection" = "In height"
- "Calibration mode" = Dry -> entry
- "Calibration mode" = Wet -> display

Factory setting URL is converted to a level unit

Density unit

Write permission Service engineers/Expert

Description Displays the density unit. The measured pressure is converted to a height using the "Height unit", "Adjust density" and "Process density" parameters.

Options
- g/cm^3
- kg/m^3
- kg/dm^3
- lb/in^3
- lb/ft^3

Factory setting g/cm^3

Adjust density

Write permission Operators/Service engineers/Expert

Description Enter the density of the medium used to perform the calibration. The measured pressure is converted to a height using the "Height unit" and "Adjust density" parameters.
Input: Auto dens. corr. = Off
Display: Auto dens. corr. ≠ Off

Factory setting 1.0

Process density

Write permission Operators/Service engineers/Expert

Description Enter a new density value for density correction. The calibration was carried out with the medium water, for example. Now the vessel is to be used for another medium with another density. The calibration is corrected appropriately by entering the new density value in the "Process Density" parameter.
Input: Auto dens. corr. = Off
Display: Auto dens. corr. ≠ Off

Note If, after completing a wet calibration, you change to dry calibration using the "Calibration mode" parameter, the density for the "Adjust density" and "Process density" parameters must be entered correctly before changing the calibration mode.

Factory setting 1.0

Level before lin.

Write permission No write permissions. Parameter is read only.

Description Displays the level value prior to linearization.

14.8 Expert → Measurement → Linearization

Lin. mode

Write permission Operators/Service engineers/Expert

Description Select the linearization mode.

Options
- Linear
  The level is output without being converted beforehand. "Level before lin" is output.
- Erase table
  The existing linearization table is deleted.
- Manual entry (sets the table to edit mode, an alarm is output):
  The value pairs of the table (X-value and Y-value) are entered manually.
- Semi-automatic entry (sets the table to edit mode, an alarm is output):
  The vessel is emptied or filled in stages in this entry mode. The device automatically records the level value (X-value). The associated volume, mass or % value is entered manually (Y-value).
- Activate table
  The table entered is activated and checked with this option. The device shows the level after linearization.

Factory setting Linear

Unit after lin.

Write permission Operators/Service engineers/Expert

Description Select volume unit, mass, height or % (unit of the Y-value).

Options
- %
- cm, dm, m, mm
- hl
- in^3, ft^3, m^3,
- l
- in, ft
- kg, t
- lb
- gal
- Igal

Factory setting %

Line-numb

Write permission Operators/Service engineers/Expert

Description Enter the number of the current point in the table. Subsequent entries in "X-val" and "Y-val" relate to this point.

Input range 1...32

X-val

Write permission Operators/Service engineers/Expert

Description Enter the X-value (level before linearization) for the specific point in the table and confirm.

Note
- If "Lin. mode" = "Manual", the level value must be entered.
- If "Lin. mode" = "Semiautomatic", the level value is displayed and must be confirmed by entering the paired Y-value.

Y-value

Write permission Operators/Service engineers/Expert

Description Enter the Y-value (value after linearization) for the specific point in the table. The unit is determined by "Unit after lin.".

Note The linearization table must be monotonic (increasing or decreasing).

Edit table

Write permission Operators/Service engineers/Expert

Description Select the function for entering the table.

Options
- Next point: Enter the next point.
- Current point: stay on the current point to correct a mistake for example.
- Last input point: skip back to previous point to correct a mistake for example.
- Insert point: Insert an additional point (see example below).
- Delete point: Delete the current point (see example below).

Example

Add point, in this case between the 4th and 5th point for example
- Select point 5 via the "Line-numb" parameter.
- Select the "Insert point" option via the "Edit table" parameter.
- Point 5 is displayed for the "Line-numb" parameter. Enter new values for the "X-val" and "Y-val" parameters.

Delete point, in this case the 5th point for example
- Select point 5 via the "Line-numb" parameter.
- Select the "Delete point" option via the "Edit table" parameter.
- The 5th point is deleted. All of the following points are pushed up one number i.e. following deletion, the 6th point becomes Point 5.

Factory setting Current point

Tank description

Write permission Operators/Service engineers/Expert

Description Enter the tank description (max. 32 alphanumeric characters)

Tank content

Write permission No write permissions. Parameter is read only.

Description Displays the level value after linearization.

14.9 Expert → Measurement → Sensor limits

LRL sensor

Write permission No write permissions. Parameter is read only.

Description Displays the lower-range limit of the sensor.

URL sensor

Write permission No write permissions. Parameter is read only.

Description Displays the upper-range limit of the sensor.

14.10 Expert → Measurement → Sensor trim

Lo trim measured

Write permission Parameter is read only. Only Endress+Hauser Service has write permission.

Description Displays the reference pressure present to be accepted for the lower calibration point.

Hi trim measured

Write permission Parameter is read only. Only Endress+Hauser Service has write permission.

Description Displays the reference pressure present to be accepted for the upper calibration point.

Lo trim sensor

Write permission No write permissions. Parameter is read only.

Description Sensor module recalibration by entering a target pressure while simultaneously and automatically accepting a reference pressure present for the lower calibration point.

Hi trim sensor

Write permission No write permissions. Parameter is read only.

Description Sensor module recalibration by entering a target pressure while simultaneously and automatically accepting a reference pressure present for the upper calibration point.

14.11 Expert → Output → Current output

Output current

Write permission Operators/Service engineers/Expert

Description Displays the current current value.

Alarm behav. P

Write permission Operators/Service engineers/Expert

Description Configure the response of the current output if sensor module limits are overshot or undershot.

Options
- Warning
  The device continues to measure. An error message is displayed.
- Alarm
  The output signal assumes a value that can be specified by the "Output fail mode" function.

Factory setting Warning

Output fail mode

Write permission Operators/Service engineers/Expert

Description Select Output fail mode. In the event of an alarm, the current assumes the current value specified with this parameter.

Options
- Max: can be set from 21 to 23 mA, see also "High alarm curr."
- Hold: last measured value is held.
- Min: 3.6 mA

Factory setting Max (22 mA)

Max. alarm curr.

Write permission Operators/Service engineers/Expert

Description Enter the current value for maximum alarm current. See also "Output fail mode".

Input range 21 to 23 mA

Factory setting 22 mA

Set min. current

Write permission Operators/Service engineers/Expert

Description Enter lower current limit.
Some switching units accept no current smaller than 4.0 mA.

Options
- 3.8 mA
- 4.0 mA

Factory setting 3.8 mA

Get LRV

Write permission Operators/Service engineers/Expert

Description Set the lower-range value – reference pressure is present at the device. The pressure for the lower current value (4 mA) is present at the device. Use the "Confirm" option to assign the lower current value to the applied pressure value.

Prerequisite: Pressure measuring mode

Options
- Cancel
- Confirm

Factory setting Cancel

Set LRV

Write permission Operators/Service engineers/Expert

Description Set the pressure value, level or content for the lower current value (4 mA).

Factory setting
- 0.0 % in Level measuring mode
- 0.0 mbar/bar or in accordance with ordering information in Pressure measuring mode

Get URV (pressure measuring mode)

Write permission Operators/Service engineers/Expert

Description Set the upper-range value – reference pressure is present at the device. The pressure for the upper current value (20 mA) is present at the device. Use the "Confirm" option to assign the applied pressure value to the upper current value.

Prerequisite: Pressure measuring mode

Options
- Cancel
- Confirm

Factory setting Cancel

Set URV

Write permission Operators/Service engineers/Expert

Description Set the pressure value, level or content for the upper current value (20 mA).

Factory setting
- 100.0 % in Level measuring mode
- URL Sensor or according to ordering information in Pressure measuring mode

Startcurrent

Write permission Service engineers/Expert

Description Entry of the start current. This setting also applies in the HART Multidrop mode.

Options
- 12 mA
- Max alarm (22 mA, cannot be set)

Factory setting 12 mA

Curr. trim 4mA

Write permission Service engineers/Expert

Description Enter the pressure value for the lower point (4 mA) of the current partial regression lines. Using this parameter and "Curr. trim 20 mA", you can adapt the current output to the transmission conditions.

Options Carry out the current trim for the lower point as follows.
- Select the "Current" option in the "Simulation mode" parameter.
- In the "Sim current" parameter, configure the "4 mA value".
- Enter the current value measured using the switching unit in the "Curr. trim 4mA" parameter.

Input range Measured current ±0.2 mA

Factory setting 4 mA

Curr. trim 20mA

Write permission Service engineers/Expert

Description Enter the pressure value for the upper point (20 mA) of the current partial regression lines. Using this parameter and "Curr. Trim 4 mA", you can adapt the current output to the transmission conditions.

Options Carry out the current trim for the upper point as follows:
- Select the "Current" option in the "Simulation mode" parameter.
- In the "Sim current" parameter, configure the value "20 mA".
- Enter the current value measured using the switching unit in the "Curr. trim 20mA" parameter.

Input range Measured current ±1 mA

Factory setting 20 mA

Offset trim 4mA

Write permission Service engineers/Expert

Description Display/enter the difference between 4 mA and the value entered for the parameter "Curr. trim 4mA".

Factory setting 0

Offset trim 20mA

Write permission Service engineers/Expert

Description Display/enter the difference between 20 mA and the value entered for the parameter "Curr. trim 20mA".

Factory setting 0

14.12 Expert→ Communication → HART config.

Burst mode

Write permission Service engineers/Expert

Description Switching burst mode on and off.

Options
- On
- Off

Factory setting Off

Burst option

Write permission Service engineers/Expert

Description You can use this parameter to define which command is sent to the master.

Options
- 1 (HART command 1)
- 2 (HART command 2)
- 3 (HART command 3)
- 9 (HART command 9)
- 33 (HART command 33)

Factory setting 1 (HART command 1)

Current mode

Write permission Service engineers/Expert

Description Configure current mode for HART communication.

Options
- Signaling
  Measured value transmission by the current value
- Fixed
  Fixed current 4.0 mA (Multidrop mode)
  (Measured value transmission via HART digital communication only)

Factory setting Signaling

Bus address

Write permission Service engineers/Expert

Description Use this function to enter the address via which a data exchange is to take place via HART protocol. (HART 5.0 master: Range 0 to 15, where address = 0 calls up the "Signaling" setting; HART 6.0 master: Range 0 to 63)

Factory setting 0

Preamble number

Write permission Service engineers/Expert

Description Use this function to enter the number of preambles in the HART protocol. (Synchronization of the modem components along a transmission path, each modem component could "swallow" one byte, at least 2 bytes must be the preamble.)

Input range 2...20

Factory setting 5

14.13 Expert→ Communication → HART info

Device type code

Write permission No write permissions. Parameter is read only.

Description Display of the numerical ID of the device
Waterpilot FMX21: 36

Device revision

Write permission No write permissions. Parameter is read only.

Description Display of Device Revision (e.g. 1)

Manufacturer ID

Write permission No write permissions. Parameter is read only.

Description Displays the HART manufacturer ID in a decimal digit format.
Here: 17 (Endress+Hauser)

HART version

Write permission No write permissions. Parameter is read only.

Description Displays HART version .
Waterpilot FMX21: 6

Description

Write permission Service engineers/Expert

Description Enter the tag description (max. 16 alphanumeric characters)

HART message

Write permission Service engineers/Expert

Description Enter the message (max. 32 alphanumeric characters) Upon request from the master, this message is sent via the HART protocol.

HART date

Write permission Service engineers/Expert

Description Enter the date of the last configuration change.

Factory setting DD/MM/YY (date of the final test)

14.14 Expert→ Communication → HART output

Primary value is

Write permission No write permissions. Parameter is read only.

Description Indicates which measured value is transmitted via the HART protocol as the primary process value.

Factory setting Depending on the selected measuring mode, the following measured values can be displayed:
- "Pressure" measuring mode: "Meas. pressure"
- "Level" measuring mode, Lin. mode "Linear": "Level before Lin"
- "Level" measuring mode, Lin. mode "Activate table": "Tank content"

Primary value

Write permission No write permissions. Parameter is read only.

Description The primary value is displayed.

Secondary val.is

Write permission No write permissions. Parameter is read only.

Description Indicates which measured value is transmitted via the HART protocol as the secondary process value. The process value is configured via HART command 51.

Factory setting
- "Pressure" measuring mode: "Corrected press."
- "Level" measuring mode, "Linear" lin. mode: "Meas. pressure"
- "Level" measuring mode, Lin. mode "Activate table": "Level before linearization"

Display Depending on the selected measuring mode, the following measured values can be displayed:
- "Meas. pressure"
- "Sensor pressure"
- "Corrected press."
- "Pressure af.damp"
- "Sensor temp."
- "Level before Lin"
- "Tank content"
- "Process density" (corrected)

Secondary value

Write permission No write permissions. Parameter is read only.

Description The secondary value is displayed.

Third value is

Write permission No write permissions. Parameter is read only.

Description Indicates which measured value is transmitted via the HART protocol as the third process value. The process value is configured via HART command 51.

Factory setting
- "Pressure" measuring mode: "Sensor pressure"
- "Level" measuring mode, "Linear" lin. mode: "Corrected press."
- "Level" measuring mode, "Activate table" lin. mode: "Meas. pressure"

Display Depending on the selected measuring mode, the following measured values can be displayed:
- "Meas. pressure"
- "Sensor pressure"
- "Corrected press."
- "Pressure af.damp"
- "Sensor temp."
- "Level before Lin"
- "Tank content"
- "Process density" (corrected)

Third value is

Write permission No write permissions. Parameter is read only.

Description The third value is displayed.

4th value is

Write permission No write permissions. Parameter is read only.

Description Indicates which measured value is transmitted via the HART protocol as the fourth process value. The process value is configured via HART command 51.

Factory setting
- "Pressure" measuring mode: "Sensor temp"
- "Level" measuring mode, "Linear" lin. mode: "Sensor temp."
- "Level" measuring mode, "Activate table" lin. mode: "Sensor temp."

Display Depending on the selected measuring mode, the following measured values can be displayed:

- "Meas. pressure"
- "Sensor pressure"
- "Corrected press."
- "Pressure af.damp"
- "Sensor temp."
- "Level before Lin"
- "Tank content"
- "Process density" (corrected)

4th value

Write permission No write permissions. Parameter is read only.

Description The fourth value is displayed.

14.15 Expert→ Communication → HART input

HART input value

Write permission No write permissions. Parameter is read only.

Description Display of the HART input value

HART input stat.

Write permission No write permissions. Parameter is read only.

Description Display of the HART input status
Bad / Uncertain / Good

HART input unit

Write permission No write permissions. Parameter is read only.

Description Display of the unit for the HART input value.

Display
- Unknown
- mbar, bar
- mmH2O, ftH2O, inH2O
- Pa, hPa, kPa, MPa
- psi
- mmHg, inHg
- Torr
- g/cm^2, kg/cm^2
- lb/ft^2
- atm
- ˚C, ˚F, K, R

Factory setting Unknown

HART input form.

Write permission Operators/Service engineers/Expert

Description Number of decimal places of the displayed input value.

Options

- x.x
- x.xx
- x.xxx
- x.xxxx
- x.xxxxx

Factory setting

x.x

14.16 Expert → Application

Electr. Delta P

Write permission Operators/Service engineers/Expert

Description For switching the Electr. Delta P application off or on with an external or constant value.

Options
- Off
- External value
- Constant

Factory setting Off

Fixed ext. value

Write permission Operators/Service engineers/Expert

Description Use this function to enter the constant value. The value refers to "HART input unit"

Factory setting 0.0

Auto dens. corr.

Write permission Operators/Service engineers/Expert

Description For switching the auto dens. corr. application off or on with an external or internal temperature value.
Before performing a calibration (dry or wet), auto-density compensation must be switched on if this function is to be used. As soon as "Auto dens. corr." is switched on, the field for entering the "Process density" and "Adjust density" is disabled.
The calibration density remains the last value until it is overwritten by a calibration. The process density remains the last value until it is overwritten when the system recalculates the value.
Automatic density compensation is performed for the 0 to 70 °C (32 to 158 °F) temperature range. The density values for water are used for this density compensation.

Prerequisite Level mode

Options
- Off
- Sensor temperature
- External value (only if Off or Constant is selected for Electr. Delta P)

Factory setting
- Off
- On (if the option "IC" was selected in the "Service" order code when ordering)

14.17 Expert → Diagnosis

Diagnostic code

Write permission No write permissions. Parameter is read only.

Description Displays the diagnostic message with the highest priority currently present.

Last diag. code

Write permission No write permissions. Parameter is read only.

Description Displays the last diagnostic message that occurred and was rectified.

Note
- Digital communication: the last message is displayed.
- Use the "Reset logbook" parameter to clear the messages listed in the parameter "Last diag. code".

Reset logbook

Write permission Service engineers/Expert

Description Use this parameter to reset all messages of the parameter "Last diag. code" and the event logbook "Last diag. 1" to "Last diag. 10".

Options
- Cancel
- Confirm

Factory setting Cancel

Min. meas. press.

Write permission No write permissions. Parameter is read only.

Description Displays the lowest pressure value measured (peakhold indicator). You can reset this indicator by means of the "Reset peakhold" parameter.

Max. meas. press.

Write permission No write permissions. Parameter is read only.

Description Displays the highest pressure value measured (peakhold indicator). You can reset this indicator by means of the "Reset peakhold" parameter.

Reset peakhold

Write permission Service engineers/Expert

Description You can reset the "Min. meas. press." and "Max. meas. press." indicators with this parameter.

Options
- Cancel
- Confirm

Factory setting Cancel

Operating hours

Write permission No write permissions. Parameter is read only.

Description Displays the hours of operation. This parameter cannot be reset.

Config. counter

Write permission Operators/Service engineers/Expert

Description Displays the configuration counter.
This counter is increased by one every time a parameter or group is changed. The counter counts up to 65535 and then starts again at zero.

14.18 Expert → Diagnosis → Diagnostic list

Diagnostic 1 (075)
Diagnostic 2 (076)
Diagnostic 3 (077)
Diagnostic 4 (078)
Diagnostic 5 (079)
Diagnostic 6 (080)
Diagnostic 7 (081)
Diagnostic 8 (082)
Diagnostic 9 (083)
Diagnostic 10 (084)

Write permission No write permissions. Parameter is read only.

Description This parameter contains up to ten diagnosis messages that are currently pending, arranged in order of priority.

14.19 Expert → Diagnosis→ Event logbook

Last diag. 1 (085)
Last diag. 2 (086)
Last diag. 3 (087)
Last diag. 4 (088)
Last diag. 5 (089)
Last diag. 6 (090)
Last diag. 7 (091)
Last diag. 8 (092)
Last diag. 9 (093)
Last diag. 10 (094)

Write permission
No write permissions. Parameter is read only.

Description
This parameter contains the last 10 diagnosis messages to occur and be rectified. They can be reset using the "Reset logbook" parameter.
Errors which have occurred multiple times are displayed once only.
Errors may also appear multiple times if another error has occurred in the meantime. The messages are displayed in chronological order.

14.20 Expert → Diagnosis → Simulation

Simulation mode

Write permission Operators/Service engineers/Expert

Description Switch on simulation and select the simulation mode. When changing the measuring mode or the "Lin. mode" level type or when the device is restarted, any simulation that may be running is switched off.

Options
- None
- Pressure →see this table, "Sim. pressure" parameter
- Level, → see this table, "Sim. level" parameter
- Tank content, → see this table, "Sim. tank cont." parameter
- Current, → see this table, "Sim. current" parameter
- Alarm/warning, → see this table, "Sim. error no."

Factory setting None

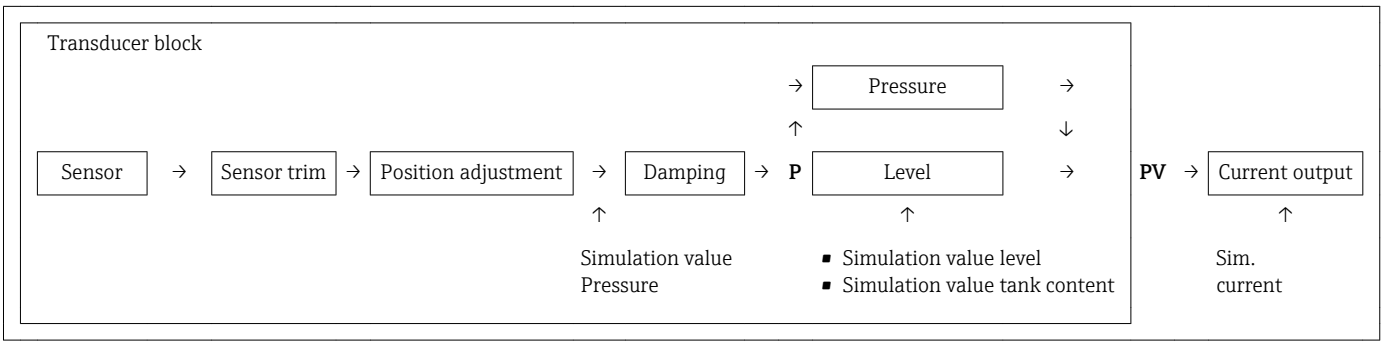

Sim. pressure

Write permission Operators/Service engineers/Expert

Description Enter the simulation value. See also "Simulation mode".

Prerequisite "Simulation mode" = Pressure

Value at switch-on Current pressure measured value

Sim. level

Write permission Operators/Service engineers/Expert

Description Enter the simulation value. See also "Simulation mode".

Prerequisite "Measuring mode" = Level and "Simulation mode" = Level

Value at switch-on Current level measured value

Sim. tank cont.

Write permission Operators/Service engineers/Expert

Description Enter the simulation value. See also "Simulation mode".

Prerequisite "Measuring Mode" = level, Lin mode "Activate table" and "Simulation Mode" = Tank content

Value at switch-on Current tank content

Sim. current

Write permission Operators/Service engineers/Expert

Description Enter the simulation value. See also "Simulation mode".

Prerequisite "Simulation Mode" = Current value

Value at switch-on Current current value

Sim. alarm/warning

Write permission Operators/Service engineers/Expert

Description Enter the simulation value. See also "Simulation mode".

Prerequisite "Simulation Mode" = Alarm/Warning

Factory setting: 484 (Simulation active)

15 Accessories

⚠ CAUTION

Observe the additional information in the individual sections!

- For additional information, see the sections "Mechanical construction" (in Technical Information TI00431P), "Environment", → 134, "Process" → 136 and "Installation" → 18.

Designation	Diagram	Description	Order number / ordering information
Suspension clamp	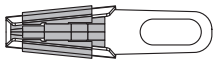 A0030950	For easy installation of the FMX21, Endress+Hauser offers a mounting clamp .	▪ 52006151 ▪ Product Configurator order code for "Accessory enclosed", option "PO"
Terminal box	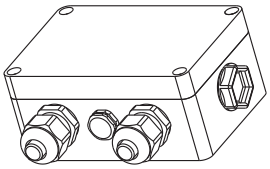 A0030967	Terminal box for terminal strip, temperature head transmitter and Pt100.	▪ 52006152 ▪ Product Configurator order code for "Accessories enclosed", option "PS"
4-terminal strip/terminals	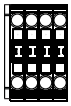 A0030951	4-terminal strip for wiring	52008938
TMT182 temperature head transmitter for FMX21 4 to 20 mA HART	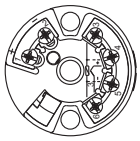 A0030952	PC-programmable (PCP) temperature head transmitter for the conversion of various input signals	▪ 51001023 ▪ Product Configurator order code for "Accessories enclosed", option "PT"
Cable mounting screws	A B 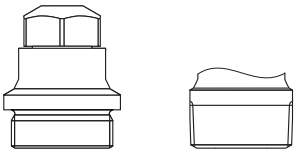 A0030953 *A G 1½" A* *B NPT 1½"*	Endress+Hauser offers a cable mounting screw for easy FMX21 mounting and to seal the measuring aperture.	▪ G 1½" A – 52008264 – Product Configurator order code for "Accessories enclosed", option "PQ" ▪ NPT 1½" – 52009311 – Product Configurator order code for "Accessories enclosed", option "PR"
Additional weight for FMX21 with outer diameter 22 mm (0.87 in) or 29 mm (1.14 in)	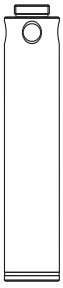 A0030954	Endress+Hauser offers additional weights to prevent sideways movement that results in measuring errors, or to make it easier to lower the device in a guide tube.	▪ 52006153 ▪ Product Configurator order code for "Accessories enclosed", option "PU"
Cable shortening kit	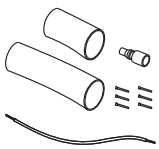 A0030948	The cable shortening kit is used to shorten a cable easily and professionally.	▪ 71222671 ▪ Product Configurator order code for "Accessories enclosed", option "PW"

Designation	Diagram	Description	Order number / ordering information
Testing adapter for FMX21 with outer diameter 22 mm (0.87 in) or 29 mm (1.14 in)	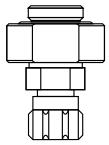 A0030956	Endress+Hauser offers a testing adapter to ease function-testing of the level probes.	▪ 52011868 ▪ Product Configurator order code for "Accessories enclosed", option "PV"
Testing adapter for FMX21 with outer diameter 42 mm (1.65 in)	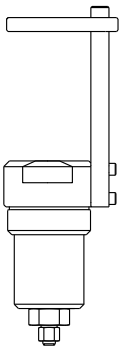 A0030957	Endress+Hauser offers a testing adapter to ease function-testing of the level probes. ▪ Observe the maximum pressure for compressed air hose and maximum overload for level probe ▪ Maximum pressure for the quick coupling piece provided: 10 bar (145 psi)	71110310
RIA15 in the field housing	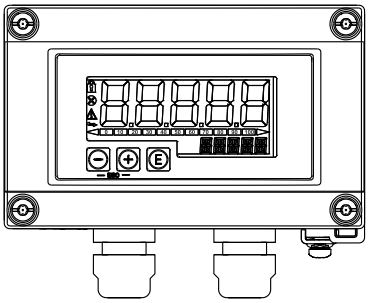 A0036164	Remote display RIA15 non-hazardous	Product structure, feature 620 "Accessory enclosed", option R4 "Remote display RIA15 non-hazardous area, field housing"
		Remote display RIA15 hazardous	Product structure, feature 620 "Accessory enclosed", option R5 "Remote display RIA15 Ex= explosion protection approval, field housing"
HART communication resistor	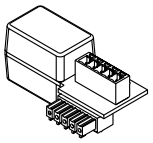 A0036165	HART communication resistor, hazardous / non-hazardous area, for use with RIA15	Product structure, feature 620 "Accessory enclosed", option R6 "HART communication resistor hazardous / non-hazardous area"

15.1 Service-specific accessories

Accessories	Description
DeviceCare SFE100	Configuration tool for HART, PROFIBUS and FOUNDATION Fieldbus field devices Technical Information TI01134S DeviceCare is available for download at www.software-products.endress.com. You need to register in the Endress+Hauser software portal to download the application.
FieldCare SFE500	FDT-based plant asset management tool FieldCare can configure all smart field units in your plant and helps you manage them. By using the status information, FieldCare is also a simple but effective way of checking the status and condition of the field devices. Technical Information TI00028S

16 Technical data

16.1 Input

16.1.1 Measured variable

FMX21 + Pt100 (optional)

- Hydrostatic pressure of a liquid
- Pt100: Temperature

TMT182 temperature head transmitter (optional) for FMX21 4 to 20 mA HART

Temperature

16.1.2 Measuring range

- Customer-specific measuring ranges or calibration that has been preset in the factory
- Temperature measurement of −10 to +70 °C (+14 to +158 °F) with Pt100 (optional)

Relative pressure

Sensor measuring range [bar (psi)]	Lowest calibratable span [1] [bar (psi)]	Vacuum resistance [bar_{abs} (psi_{abs})]	Option [2]
0.1 (1.5)	0.01 (0.15)	0.3 (4.5)	1C
0.2 (3.0)	0.02 (0.3)	0.3 (4.5)	1D
0.4 (6.0)	0.04 (1.0)	0	1F
0.6 (9.0)	0.06 (1.0)	0	1G
1.0 (15.0)	0.1 (1.5)	0	1H
2.0 (30.0)	0.2 (3.0)	0	1K
4.0 (60.0)	0.4 (6.0)	0	1M
10.0 (150) [3]	1.0 (15)	0	1P
20.0 (300) [3]	2.0 (30)	0	1Q

1) Largest turn down that can be configured at the factory: 10:1, higher turn down can be configured on request or in the device (for FMX21 4 to 20 mA HART).
2) Product Configurator order code for "Sensor range"
3) These measuring ranges are not available for the special version with plastic insulation, external diameter of 29 mm (1.14 in).

Absolute pressure

Sensor measuring range [bar (psi)]	Lowest calibratable span [1] [bar (psi)]	Vacuum resistance [bar_{abs} (psi_{abs})]	Option [2]
2.0 (30.0)	0.2 (3.0)	0	2K
4.0 (60.0)	0.4 (6.0)	0	2M

Sensor measuring range [bar (psi)]	Lowest calibratable span [1] [bar (psi)]	Vacuum resistance [bar_{abs} (psi_{abs})]	Option [2]
10.0 (150) [3]	1.0 (15)	0	2P
20.0 (300) [3]	2.0 (30)	0	2Q

1) Largest turn down that can be configured at the factory: 10:1, higher turn down can be configured on request or in the device (for FMX21 4 to 20 mA HART).
2) Product Configurator order code for "Sensor range"
3) These measuring ranges are not available for the special version with plastic insulation, external diameter of 29 mm (1.14 in).

16.1.3 Input signal

FMX21 + Pt100 (optional)

- Change in capacitance
- Pt100: Change in resistance

TMT182 temperature head transmitter (optional) for FMX21 4 to 20 mA HART

Pt100 resistance signal, 4 wire

16.2 Output

16.2.1 Output signal

FMX21 + Pt100 (optional)

- 4 to 20 mA HART with superimposed digital communication protocol HART 6.0, 2-wire for hydrostatic pressure measured value.
  Ordering information: Product Configurator order code for "Output", option "2"
  Options:
  – Max. alarm (factory setting 22mA): can be set from 21 to 23 mA
  – Hold measured value: last measured value is held
  – Min. alarm: 3.6 mA
- Pt100: temperature-dependent resistance value

TMT182 temperature head transmitter (optional) for FMX21 4 to 20 mA HART

4 to 20 mA HART with superimposed digital communication protocol HART 5.0 for temperature measured value, 2-wire

16.2.2 Signal range

3.8 mA to 20.5 mA

16.2.3 Maximum load for FMX21 4 to 20 mA HART

The maximum load resistance depends on the supply voltage (U) and must be determined individually for each current loop, see formula and diagrams for FMX21 and temperature head transmitter. The total resistance resulting from the resistances of the connected devices, the connecting cable and, where applicable, the resistance of the extension cable may not exceed the load resistance value.

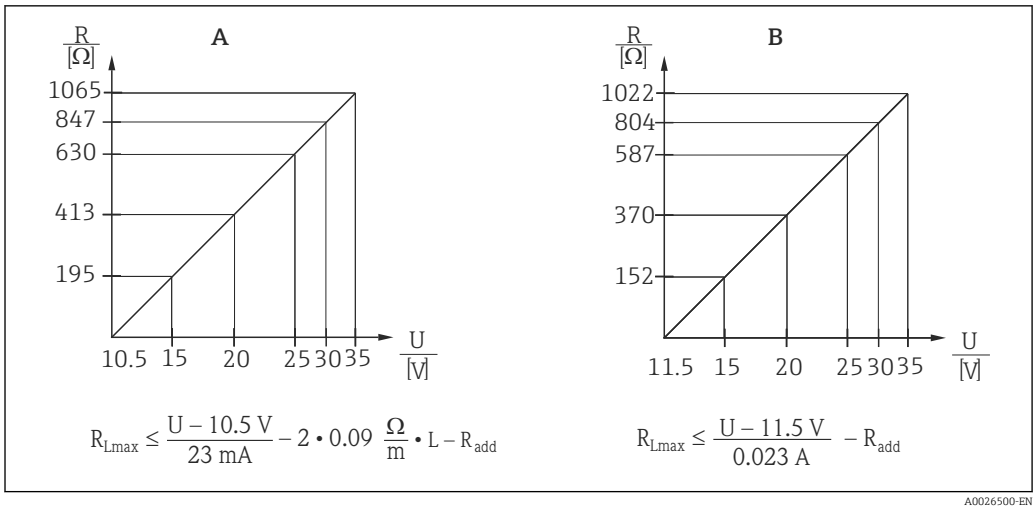

A FMX21 4 to 20 mA HART load chart for estimating the load resistance. Additional resistances, such as the resistance of the extension cable, have to be subtracted from the value calculated as shown in the equation.

B Load diagram for TMT182 temperature head transmitter for estimating the load resistance. Additional resistances must be subtracted from the value calculated as shown in the equation

R_{Lmax} *Max. load resistance [Ω]*

R_{add} *Additional resistances such as resistance of evaluating device and/or display unit, cable resistance [Ω]*

U Supply voltage [V]

L Basic length of extension cable [m] (cable resistance per wire 0.09 Ω/m)

- When using the measuring device in hazardous areas, installation must comply with the corresponding national standards and regulations and the Safety Instructions or Installation or Control Drawings (XA).
- When operating via a handheld terminal or via a PC with an operating program, a minimum communication resistance of 250 Ω must be taken into account.

16.2.4 Protocol-specific data for FMX21 4 to 20 mA HART

Manufacturer ID	17 (11 hex)
Device type code	25 (19 hex)
Device revision	01 (01 hex) - SW version 01.00.zz
HART specification	6
DD revision	01
Device description files (DTM, DD)	Information and files under: ▪ www.endress.com ▪ www.fieldcommgroup.org
HART load	Min. 250 Ω
HART device variables	The dynamic variables SV, TV and QV may be assigned to any device variable: **Standard process values for SV, TV (second and third device variable) are dependent on the measuring mode:** ▪ Pressure ▪ Level **Standard process value for QV (fourth device variable) is the sensor temperature:** Temperature **Measured values for PV (first device variable) are dependent on the measuring mode:** ▪ Pressure ▪ Level ▪ Tank content
Supported functions	▪ Burst mode ▪ Additional transmitter status ▪ Device locking ▪ Alternative measuring modes ▪ Catch variable ▪ Long tag

16.3 Performance characteristics

16.3.1 Reference operating conditions

FMX21 + Pt100 (optional)

- As per IEC 60770
- Ambient temperature T_U = constant, in the range of +21 to +33 °C (+70 to +91 °F)
- Humidity φ = constant, in the range of 20 to 80 % rH
- Ambient pressure p_U = constant, in the range of 860 to 1060 mbar (12.47 to 15.37 psi)
- Position of measuring cell constant, vertical in the range of ±1°
- Input of LOW SENSOR TRIM and HIGH SENSOR TRIM for lower range value and upper range value (only for HART)
- Supply voltage constant: 21 V DC to 27 V DC
- Load with HART: 250 Ω
- Pt100: DIN EN 60770, T_U = +25 °C (+77 °F)

TMT182 temperature head transmitter (optional) for FMX21 4 to 20 mA HART

Calibration temperature +25 °C (+77 °F) ±5 K

16.3.2 Reference accuracy

FMX21 + Pt100 (optional)

The reference accuracy comprises the non-linearity after limit point configuration, hysteresis and non-reproducibility in accordance IEC 60770.

Standard version [2]:
Setting ±0.2 %
– to TD 5:1: < 0.2 % of set span
– from TD 5:1 to TD 20:1 ±(0.02 x TD+0.1)

Platinum version [3]:
- Setting ±0.1 % (optional)
  – to TD 5:1: < 0.1 % of set span
  – from TD 5:1 to TD 20:1 ±(0.02 x TD)
- Class B as per DIN EN 60751
  Pt100: max. ±1 K

TMT182 temperature head transmitter (optional) for FMX21 4 to 20 mA HART

- ±0.2 K
- With Pt100: max. ±0.9 K

16.3.3 Resolution

Current output: 1 µA

Reading cycle

HART commands: on average 2 to 3 per second

2) Ordering information: Product Configurator order code for "Reference accuracy", option "G"
3) Ordering information: Product Configurator order code for "Reference accuracy", option "D"

16.3.4 Long-term stability

FMX21 + Pt100 (optional)

- ≤ 0.1 % of URL/year
- ≤ 0.25 % of URL/5 years

TMT182 temperature head transmitter (optional) for FMX21 4 to 20 mA HART

≤ 0.1 K per year

16.3.5 Influence of medium temperature

- Thermal change in the zero output and the output span:
  0 to +30 °C (+32 to +86 °F): < (0.15 + 0.15 x TD)% of set span
  −10 to +70 °C (+14 to +158 °F): < (0.4 + 0.4 x TD)% of set span
- Temperature coefficient (T_K) of the zero output and the output span
  −10 to +70 °C (+14 to +158 °F): 0.1 % / 10 K of URL

16.3.6 Warm-up period

FMX21 + Pt100 (optional)

- FMX21: < 6 s
- Pt100: 300 s

TMT182 temperature head transmitter (optional) for FMX21 4 to 20 mA HART

4 s

16.3.7 Response time

FMX21 + Pt100 (optional)

- FMX21: 400 ms (T90 time), 500 ms (T99 time)
- Pt100: 160 s (T90 time), 300 s (T99 time)

16.4 Environment

16.4.1 Ambient temperature range

FMX21 + Pt100 (optional)

- With external diameter of 22 mm (0.87 in) and 42 mm (1.65 in):
  −10 to +70 °C (+14 to +158 °F) (= medium temperature)
- With external diameter of29 mm (1.14 in):
  0 to +50 °C (+32 to +122 °F) (= medium temperature)

Cable

(when mounted in a fixed position)
- With PE: −30 to +70 °C (−22 to +158 °F)
- With FEP: −40 to +70 °C (−40 to +158 °F)
- With PUR: −40 to +70 °C (−40 to +158 °F)

Terminal box

−40 to +80 °C (−40 to +176 °F)

TMT182 temperature head transmitter (optional) for FMX21 4 to 20 mA HART

−40 to +85 °C (−40 to +185 °F)

Temperature head transmitter 2-wire, configured for a measuring range of −20 to +80 °C (−4 to +176 °F). This configuration offers a temperature range of 100 K which can be easily mapped. Please note that the Pt100 resistance temperature detector is suitable for a temperature range of −10 to +70 °C (14 to +158 °F)

The TMT182 temperature head transmitter is not designed for use in hazardous areas incl. CSA GP.

16.4.2 Storage temperature range

FMX21 + Pt100 (optional)

−40 to +80 °C (−40 to +176 °F)

Cable

(when mounted in a fixed position)
- With PE: −30 to +70 °C (−22 to +158 °F)
- With FEP: −30 to +80 °C (−22 to +176 °F)
- With PUR: −40 to +80 °C (−40 to +176 °F)

Terminal box

−40 to +80 °C (−40 to +176 °F)

TMT182 temperature head transmitter (optional) for FMX21 4 to 20 mA HART

−40 to +100 °C (−40 to +212 °F)

16.4.3 Degree of protection

FMX21 + Pt100 (optional)

IP68, permanently hermetically sealed at 20 bar (290 psi) (~200 m H_2O)

Terminal box (optional)

IP66, IP67

TMT182 temperature head transmitter (optional) for FMX21 4 to 20 mA HART

IP00, condensation permitted

16.4.4 Electromagnetic compatibility (EMC)

FMX21 + Pt100 (optional)

- EMC in accordance with all relevant requirements of EN 61326 series. For details, refer to the Declaration of Conformity.
- Maximum deviation: < 0.5 % of span.

TMT182 temperature head transmitter (optional) for FMX21 4 to 20 mA HART

EMC in accordance with all relevant requirements of EN 61326 series. For details, refer to the Declaration of Conformity.

16.4.5 Overvoltage protection

FMX21 + Pt100 (optional)

- Integrated overvoltage protection as per EN 61000-4-5 (500 V symmetrical/1000 V asymmetrical)
- Overvoltage protection ≥ 1.0 kV, external if necessary

TMT182 temperature head transmitter (optional) for FMX21 4 to 20 mA HART

Provide overvoltage protection, externally if necessary (see Technical Information).

16.5 Process

16.5.1 Medium temperature range

FMX21 + Pt100 (optional)

- With external diameter of 22 mm (0.87 in) and 42 mm (1.65 in):
  −10 to +70 °C (+14 to +158 °F)
- With external diameter of 29 mm (1.14 in):
  0 to +50 °C (+32 to +122 °F)

TMT181 temperature head transmitter (optional) for FMX21 4 to 20 mA HART

−40 to +85 °C (−40 to +185 °F)

(= ambient temperature), install temperature head transmitter outside the medium.

Temperature head transmitter 2-wire, configured for a measuring range of −20 to +80 °C (−4 to +176 °F). This configuration offers a temperature range of 100 K which can be easily mapped. Please note that the Pt100 resistance temperature detector is suitable for a temperature range of −10 to +70 °C (14 to +158 °F)

The TMT182 temperature head transmitter is not designed for use in hazardous areas incl. CSA GP.

16.5.2 Medium temperature limit

FMX21 + Pt100 (optional)

With external diameter of 22 mm (0.87 in) and 42 mm (1.65 in):
−20 to +70 °C (−4 to +158 °F)

In hazardous areas incl. CSA GP, the medium temperature limit is −10 to +70 °C (+14 to +158 °F).

With external diameter of29 mm (1.14 in): 0 to +50 °C (+32 to +122 °F)

The FMX21 may be operated in this temperature range. The specification values, such as accuracy, may be exceeded.

16.5.3 Pressure specifications

⚠ WARNING

The maximum pressure for the measuring device depends on the lowest-rated element with regard to pressure.

- For pressure specifications, see the "Measuring range" section and the "Mechanical construction" section.
- The measuring device must be operated only within the specified limits!
- The Pressure Equipment Directive (2014/68/EU) uses the abbreviation "PS". The abbreviation "PS" corresponds to the MWP (maximum working pressure) of the measuring device.
- MWP (maximum working pressure): The MWP (maximum working pressure) is specified on the nameplate. This value refers to a reference temperature of +20 °C (+68 °F) and may be applied to the device for an unlimited time. Observe temperature dependency of the MWP.
- OPL (Over Pressure Limit = sensor overload limit): The test pressure corresponds to the over pressure limit of the sensor and may only be applied for a limited time period to ensure measurement within specification and in order to avoid permanent damage. In the case of sensor range and process connections where the over pressure limit (OPL) of the process connection is smaller than the nominal value of the sensor, the device is set at the factory, at the very maximum, to the OPL value of the process connection. If you want to use the entire sensor range, select a process connection with a higher OPL value.
- avoid steam hammering! Steam hammering can cause zero point drifts. Recommendation: Residue (such as condensation or drops of water) can remain on the process isolating diaphragm after CIP cleaning and lead to local steam hammering if steam cleaning is performed again. In practice, drying the process isolating diaphragm (e.g. by blowing) has proved to prevent steam hammering.

16.6 Additional technical data

See Technical Information TI00431P.

Index

0 ... 9

4th value 114
4th value is 113

A

Accessories
  Service-specific 125
Adjust density 97
Alarm behav. P 104
Application 10
Auto dens. corr. 117

B

Burst Mode 108
Burst Option 108
Bus Address 108

C

Calib. Offset 45, 90
Calibration mode 95
CE mark (declaration of conformity) 11
Cleaning 76
Code definition 86
Config. counter 119
Configuration of a level measurement 48
Configuration of a pressure measurement 46
Configure measuring mode 43
Configure pressure engineering unit 44
Configuring level measurement 48
Configuring pressure measurement 46
Corrected press. 93
Curr. trim 4mA 106
Curr. trim 20mA 107
Current Mode 108
Cust. tag number 87

D

Damping 45, 90
Declaration of Conformity 11
Density correction 117
Density unit 97
Description 110
Designated use 10
Device replacement 77
Device revision 110
Device tag 87
Device type code 110
DeviceCare 36
Diagnostic 1 (075) 120
Diagnostic 2 (076) 120
Diagnostic 3 (077) 120
Diagnostic 4 (078) 120
Diagnostic 5 (079) 120
Diagnostic 6 (080) 120
Diagnostic 7 (081) 120
Diagnostic 8 (082) 120
Diagnostic 9 (083) 120
Diagnostic 10 (084) 120
Diagnostic code 118
Diagnostic event 71
Diagnostic event in the RIA15 71
Diagnostic events 70
Diagnostic message 70
Diagnostics
  Symbols 70

E

Edit table 100
Electr. Delta P 117
Electr.serial no. 88
Empty calib. 95
Empty height 96
Empty pressure 95
ENP version 88
Enter reset code 89
Event text 71
Ext. order code 87
Exterior cleaning 76

F

Firmware Version 87
Fixed ext. value 117
Full calib. 96
Full height 97
Full pressure 96

G

Get LRV 105
Get URV (pressure measuring mode) 105

H

HART Date 111
HART input form. 115
HART input stat. 115
HART input unit 115
HART input val. 115
HART Message 110
HART version 110
HART® protocol
  Operating tools 41
  Process variables 41
  Version data for the device 41
Height unit 94
Hi trim measured 103
Hi trim sensor 103

L

Last diag. 1 (085) 121
Last diag. 2 (086) 121
Last diag. 3 (087) 121
Last diag. 4 (088) 121
Last diag. 5 (089) 121
Last diag. 6 (090) 121
Last diag. 7 (091) 121

Last diag. 8 (092) 121
Last diag. 9 (093) 121
Last diag. 10 (094) 121
Last diag. code 118
Level before lin. 98
Level selection 94
Lin. mode 99
Line-numb. 99
Lo trim measured 103
Lo trim sensor 103
Local display
see Diagnostic message
see In alarm condition
LRL sensor 102

M
Maintenance 76
Manufacturer ID 110
Max. alarm curr. 104
Max. meas. press. 118
Media 10
Menu
Overview 78, 81
Parameter description 86
Min. meas. press. 118

N
Nameplate 15

O
Offset trim 4mA 107
Offset trim 20mA 107
Operating hours 119
Operating menu
Overview 78, 81
Parameter description 86
Operating mode 89
Operational safety 10
Operator code 86
Order Identifier 88
Output current 104
Output fail mode 104
Output unit 94

P
Pos. zero adjust 90
Preamble Number 109
Press. eng. unit 91
Pressure af.damp 93
Pressure measured 92
Primary value 112
Primary value is 112
Process density 98
Product safety 11

R
Repair concept 77
Replacing a device 77
Reset Logbook 118
Reset Peakhold 119

S
Safety Instructions
Basic 10
Safety Instructions (XA) 7
Secondary val. is 112
Secondary value 112
Sensor pressure 92
Sensor serial no. 88
Sensor temp. 91
Serial number 87
Set LRV 92, 105
Set min. current 105
Set URV 92, 106
Sim. alarm/warning 123
Sim. current 123
Sim. level 122
Sim. pressure 122
Sim. tank cont. 123
Simulation mode 122
Spare parts 77
Nameplate 77
Staff
Requirements 10
Startcurrent 106
Status signals 70

T
Tank content 101
Tank description 101
Temp. Eng. Unit 91
Third value 113
Third value is 113
Troubleshooting 70

U
Unit after lin. 99
URL sensor 102
Use of the measuring devices
Borderline cases 10
Incorrect use 10
Using measuring device
see Designated use

W
W@M Device Viewer 77
Workplace safety 10

X
X-value 100

Y
Y-value 100

www.addresses.endress.com

Endress+Hauser

People for Process Automation

ENDRESS + HAUSER – DISSOLVED OXYGEN SENSORS

Technical Information
Oxymax COS22/COS22D

Digital or analog sensor for the measurement of oxygen

Sensor with long-term stability for frequent sterilizations and autoclavability

Application

- Pharmaceutics and biotechnology
  - Process control in enzyme production
  - Control of culture processing
- Beverage industry
- Chemical industry
- Water treatment
  - Boiler feedwater
  - WFI (water for injection)
- Inertization
- Residual oxygen measurement in processes

Your benefits

- Sensor version suitable for pharmaceutical industry:
  - Stainless steel 1.4435 (AISI 316L)
  - Sterilizable and autoclavable
- Application-specific versions:
  - Sensor for standard applications, e.g. for fermenter control
  - Trace sensor, e.g. for use in the power station sector and for the beverage industry (CO2-compatible sensor)
- Very versatile:
  - Standard process connection Pg 13.5
  - Installation possible in standard pH assemblies
- Short response time: t_{98} < 60 s
- Integrated temperature sensor

Other advantages of Memosens technology

- Maximum process safety owing to non-contact, inductive signal transmission
- Data security thanks to digital data transmission
- Very easy to use as sensor data saved in the sensor
- Predictive maintenance possible as sensor load data logged in the sensor

Endress+Hauser
People for Process Automation

Function and system design

Measuring principle

The oxygen molecules that diffuse through the membrane are reduced at the cathode to hydroxide ions (OH-). At the anode, silver is oxidized to silver ions (Ag+) (this forms a silver halide layer). A current flows due to the electron donation at the cathode and the electron acceptance at the anode. Under constant conditions, this flow is proportional to the oxygen content of the medium. This current is converted in the transmitter and indicated on the display as an oxygen concentration in mg/l, µg/l, ppm, ppb or Vol%, as a saturation index in % SAT or as an oxygen partial pressure in hPa.

Application in gaseous media

The trace sensor version can be used in gaseous media, such as for inertizations and quality control in the trace range. Process monitoring in gaseous media can be performed with the standard sensor. The measured value is displayed in Vol% or as oxygen partial pressure in hPa. Sensors that are used in dry media consume more electrolyte and must therefore be maintained more frequently.

Measuring system

A complete measuring system comprises:
- An Oxymax COS22 or Oxymax COS22D oxygen sensor
- A transmitter, see table
- An appropriate measuring cable, see table
- Optional: an assembly, e.g. permanent installation assembly CPA442, flow assembly CPA240, or retractable assembly CPA875

Transmitter	COS22D- standard, trace	COS22- standard	COS22- trace
Liquiline CM44x	☑, cable: CYK10	-	-
Liquiline CM42	☑, cable: CYK10	-	-
Liquisys COM2x3	-	☑, cable: COK21	-
Third-party provider	Memosens partner	Possible, cable: COK21	Possible, cable: COK21

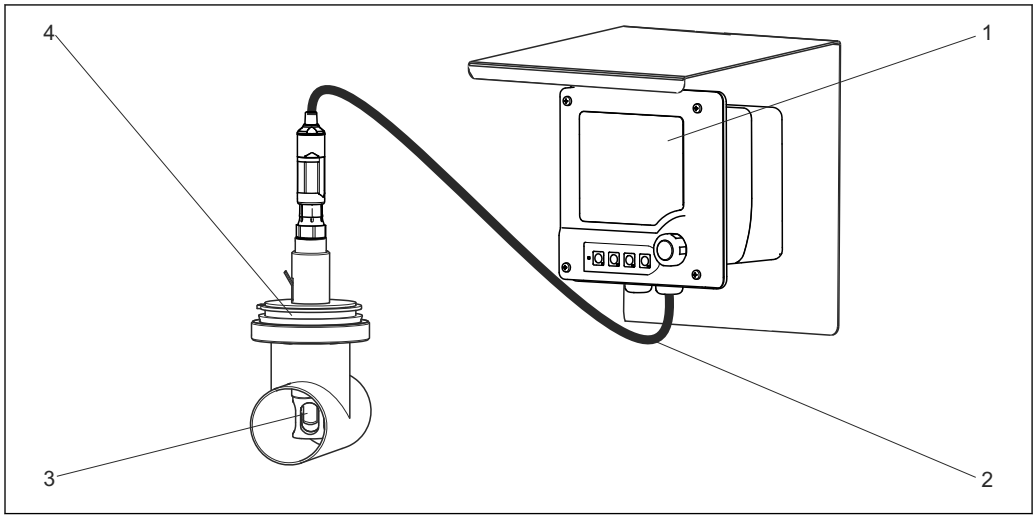

*1 Example of a measuring system with COS22D-*1*

1 Liquiline CM42
2 Measuring cable CYK10
*3 Digital oxygen sensor Oxymax COS22D-*1*
4 Permanent installation assembly CPA442

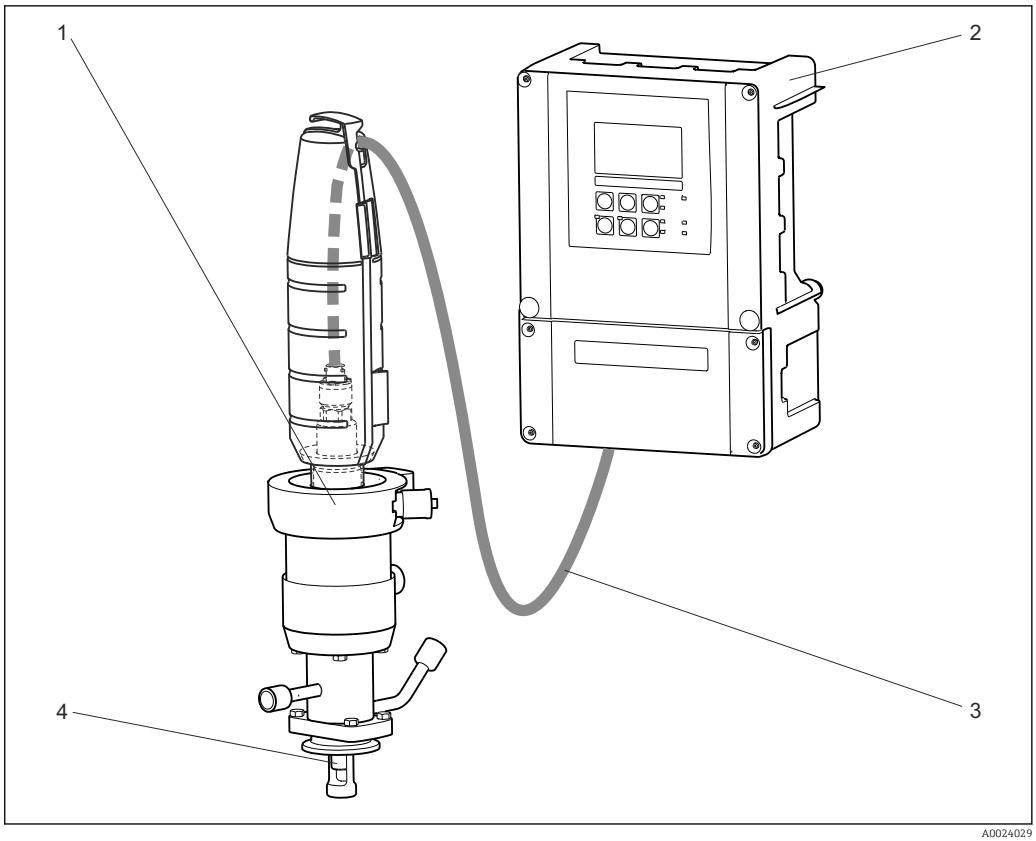

2 *Example of a measuring system with COS22-*1*

1 *Retractable assembly CPA875*
2 *Transmitter Liquisys COM253*
3 *Measuring cable COK21*
4 *Oxygen sensor COS22*

Reliability

Dependability

Memosens
Memosens makes your measuring point safer and more reliable:
- Non-contact, digital signal transmission enables optimum galvanic isolation
- Completely watertight
  - Can even be connected under water
  - No contact corrosion
  - Measured value not affected by moisture. Correct transmission of even the smallest values, e.g. from amperometric sensors.
- Laboratory sensor calibration possible, thus increasing measured value availability
- Intrinsically safe electronics mean operation in hazardous areas is not a problem.
- Predictive maintenance thanks to recording of sensor data, e.g.:
  - Total hours of operation
  - Hours of operation with very high or very low measured values
  - Hours of operation at high temperatures
  - Number of steam sterilizations
  - Sensor condition

Serviceability

Sensors with Memosens technology have integrated electronics that save calibration data and other information (such as total operating hours, operating hours under extreme measuring conditions). The sensor data are automatically communicated to the transmitter once the sensor is connected and are used to calculate the current measured value.

As the calibration data are saved, it is possible to calibrate and adjust the sensor independently of the measuring point. The result:
- Convenient calibration in the laboratory under optimum external conditions improves calibration quality.
- As pre-calibrated sensors can be replaced quickly and easily, the availability of the measuring point is increased significantly.
- Thanks to the availability of the sensor data, measuring point maintenance intervals can be determined precisely and predictive maintenance is possible.
- The sensor history can be documented with external data storage media and evaluation programs. The sensor's range of application can be determined based on the sensor's prior history.

Safety

Data security thanks to digital data transmission
Memosens technology digitizes the measured values in the sensor and transmits the data to the transmitter using a non-contact connection that is free from potential interference. The result:
- Automatic error message if sensor fails or connection between sensor and transmitter is interrupted
- Immediate error detection increases measuring point availability

Input

Measured variables

Dissolved oxygen [mg/l, µg/l, ppm, ppb or % SAT or hPa]

Temperature [°C, °F]

Measuring ranges

Measuring ranges apply for 20 ° (68 °F) and 1013 hPa (15 psi)

	Measuring range	Optimum operational range [1]
COS22/22D-*1	0.01 to 60 mg/l 0 to 600 % SAT 0 to 1200 hPa (0 to 6 psi) 0 to 100 Vol%	0.01 to 20 mg/l 0 to 200 % SAT 0 to 400 hPa (0 to 6 psi) 0 to 40 Vol%
COS22/22D-*3 COS22D-*4	0.001 to 10 mg/l 0 to 120 % SAT 0 to 250 hPa (0 to 6 psi) 0 to 25 Vol%	0.001 to 2 mg/l 0 to 20 % SAT 0 to 40 hPa (0 to 6 psi) 0 to 4 Vol%

1) Applications in this range guarantee a long service life and minimum maintenance

Power supply

Electrical connection

COS22D

The electrical connection of the sensor to the transmitter takes place via special measuring cable CYK10 or CYK20.

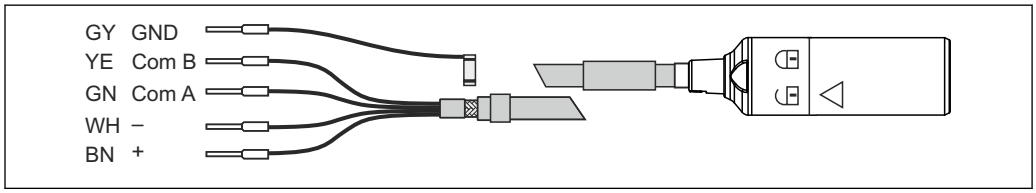

3 Measuring cable CYK10/CYK20

COS22

The electrical connection of the sensor to the transmitter takes place via the multi-core COK21 special measuring cable.

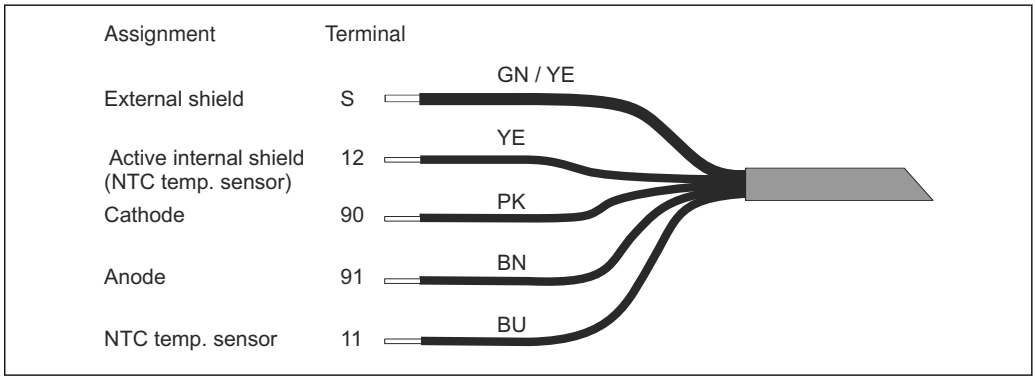

4 *Measuring cable COK21*

The polarization voltage must be set at the transmitter as follows:
Standard measuring range: -650mV
Trace measuring range: -550mV
The voltage is applied between the working electrode (cathode) and the reference electrode (anode).

Performance characteristics

Response time	From air to nitrogen at reference operating conditions: ▪ t_{90} : < 30 s ▪ t_{98} : < 60 s	
Reference operating conditions	Reference temperature: Reference pressure: Reference application:	25 °C (77 °F) 1013 hPa (15 psi) Air-saturated water
Signal current in air	COS22/22D-*1 (standard sensor): COS22/22D-*3, COS22D-*4 (trace sensor):	40 to 100 nA 210 to 451 nA
Zero current	COS22/22D-*1 (standard sensor): COS22/22D-*3, COS22D-*4 (trace sensor):	< 0.1 % of the signal current in air < 0.03 % of the signal current in air
Measured value resolution	COS22/22D-*1 (standard sensor): COS22/22D-*3, COS22D-*4 (trace sensor): Corresponds to the recommended measured value resolution at the transmitter	10 ppb in aqueous, 0.2 hPa or 0.02 Vol% in gaseous media 1 ppb in aqueous, 0.02 hPa or 0.002 Vol% in gaseous media
Maximum measured error	COS22/22D-*1 (standard sensor): COS22/22D-*3, COS22D-*4 (trace sensor): * at reference operating conditions	≤ ±1 % of measuring range + 10 ppb * ≤ ±1 % of measuring range + 1 ppb *
Long-term drift	< 4 % per month in reference operating conditions ≤ 1 % per month in operation with reduced oxygen concentration (< 4 Vol% O_2)	
Influence of the medium pressure	Pressure compensation not required	

Polarization time	COS22/22D-*1 (standard sensor):	< 30 min for 98% signal value, 2 h for 100%
	COS22/22D-*3, COS22D-*4 (trace sensor):	< 3 h for 98% signal value, 12 h for 100%
Intrinsic oxygen consumption	COS22/22D-*1 (standard sensor):	Approx. 20 ng/h in air at 25 ˚C (77 ˚F)
	COS22/22D-*3, COS22D-*4 (trace sensor):	Approx. 100 ng/h in air at 25 ˚C (77 ˚F
Operating time of the electrolyte	Theoretical operating time at p_{O2} = 210 mbar and T=25 ˚C (77 ˚F)	
	COS22/22D-*1 (standard sensor):	> 1.5 years
	COS22/22D-*3, COS22D-*4 (trace sensor):	> 3 months

Temperature compensation

COS22D

Compensation of the membrane properties takes place in the transmitter between -5 and 90˚C (23 to 194 ˚F); above 90˚C (194 ˚F), extrapolation takes place

- Measured variable as partial pressure [hPa] or in Vol%: -5 to 90 ˚C (23 to 194 ˚F)
- Measured variable as concentration [mg/l]: 0 to 80 ˚C (32 to 176 ˚F)
- Measured variable as saturation [%SAT]: -5 to 90 ˚C (23 to 194 ˚F)

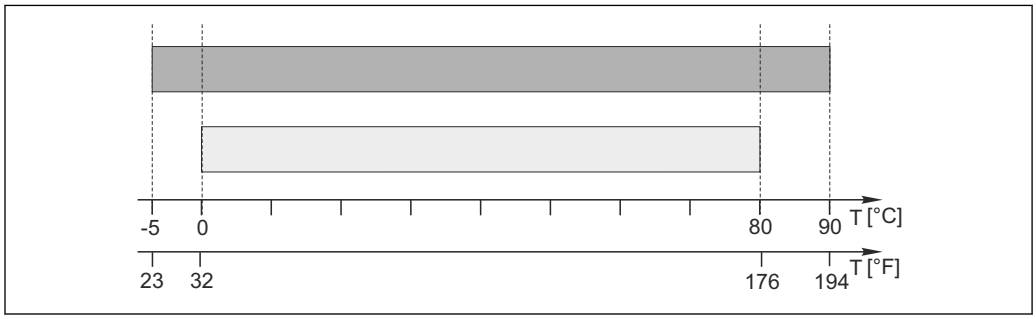

A0011887

COS22

Compensation of the membrane properties depending on the transmitter, recommended: 2.4 % per K

Installation

Mounting instructions

Installation in suitable assembly is required (depending on the application)

NOTICE

If the unit is installed without an assembly, there is the danger of rupturing cables or losing the sensor

▶ Do not install the sensor suspended from the cable!

Installation angle

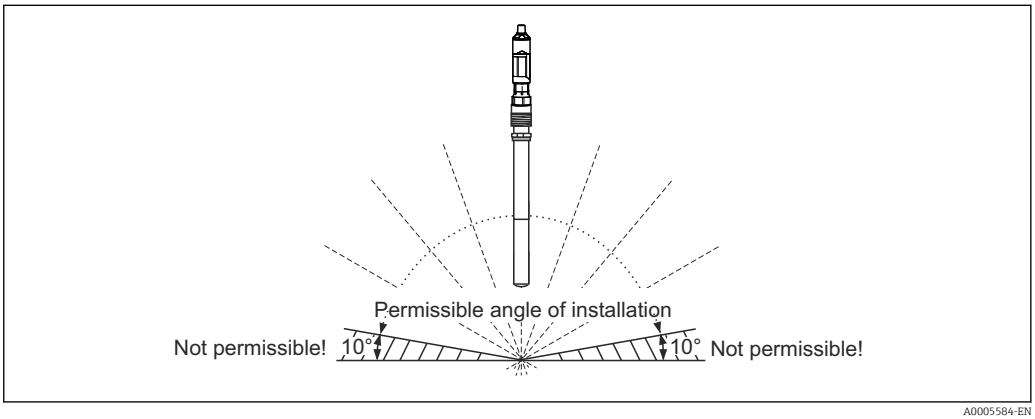

5 *Permitted orientations*

The sensor must be installed with an inclination angle of 10 ° to 170 ° in an assembly, support or a corresponding process connection. Recommended angle: 45° in order to avoid the formation of air bubbles.

Inclination angles other than those mentioned are not permitted. Do **not** install the sensor overhead.

Observe the instructions for installing sensors in the Operating Instructions for the assembly used.

Environment

Ambient temperature range	COS22/22D-*1 /3:	-5 to +135 °C (23 to 275 °F), non-freezing
	COS22D-*4:	-5 to +50 °C (23 to 120 °F), non-freezing

Storage temperature

−5 to +50 °C (20 to 120 °F) at 95% relative humidity, non-condensing

NOTICE

Danger of sensor drying out

▶ Store the sensor with the watering cap only (filled with tap water).

Degree of protection

IP 68 (10 m (33 ft) head of water at 25 °C (77 °F) over 45 days, 1 mol/l KCl)

Humidity

0 to 100%, COS22D: condensating, COS22: not condensating in area of T-82 connection

Process

Process temperature	COS22/22D-*1 /3:	-5 to +135 °C (23 to 275 °F), non-freezing
	COS22D-*4:	-5 to +80 °C (23 to 180 °F), non-freezing

Process pressure

Ambient pressure ... 12 bar (... 174 psi)

Temperature-pressure ratings

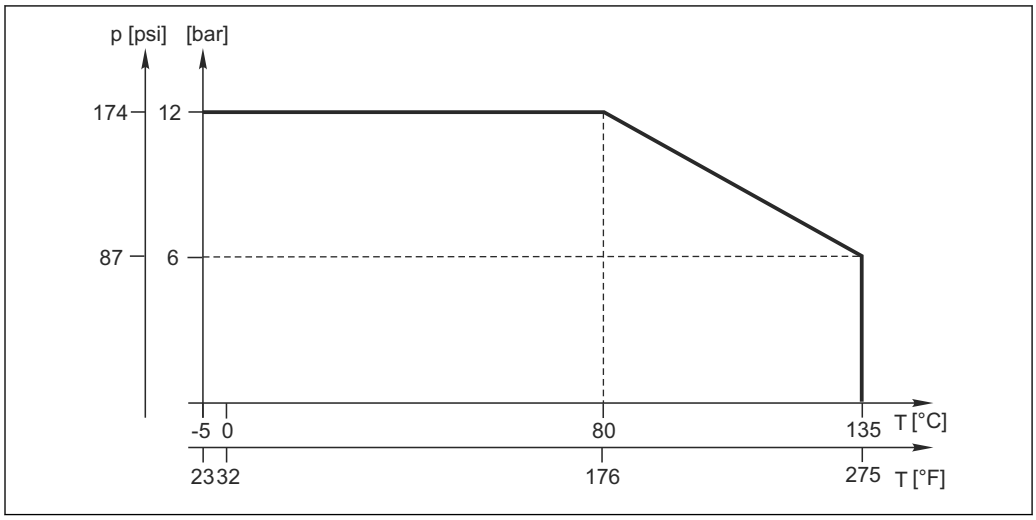

Minimum flow	COS22/22D-*1 (standard sensor):	0.02 m/s (0.07 ft/s)
	COS22/22D-*3, COS22D-*4 (trace sensor):	0.1 m/s (0.33 ft/s)

Chemical resistance

Parts in contact with the medium are chemically resistant to:
- Diluted acids and alkalis
- Hot water and superheated steam up to max. 135 °C (275 °F)
- CO_2 up to 100 %, only with trace sensor COS22/22D-*3

NOTICE

Hydrogen sulfide and ammonia shorten the operating life of the sensor.

► Do not use the sensor in applications where it is exposed to hydrogen sulfide or ammonia vapors.

Cross-sensitivity

COS22/22D-*1/3

Molecular hydrogen causes false low readings and can, in a worst-case scenario, result in total failure of the sensor.
No cross interference from hydrogen with the COS22D-*4 version.

CIP compatibility

Yes (COS22/22D-*1/3)

SIP compatibility

Yes, max. 140 °C (284 °F) (COS22/22D-*1/3)

Autoclavability

Yes, max. 140 °C (284 °F), max. 30 min. (COS22/22D-*1/3)

Mechanical construction

Design

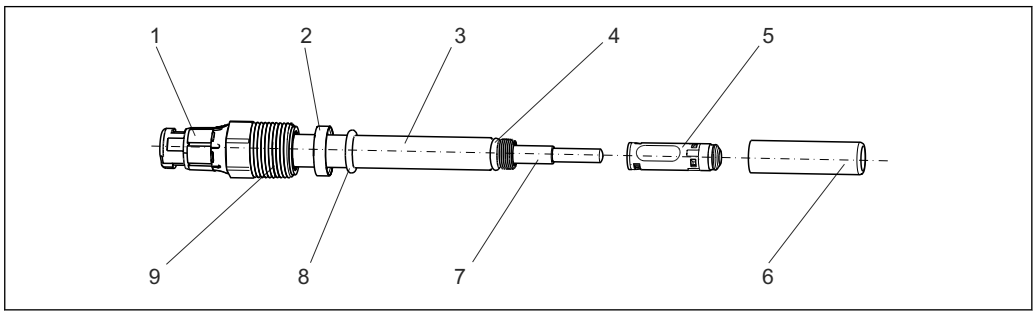

6 *COS22D*

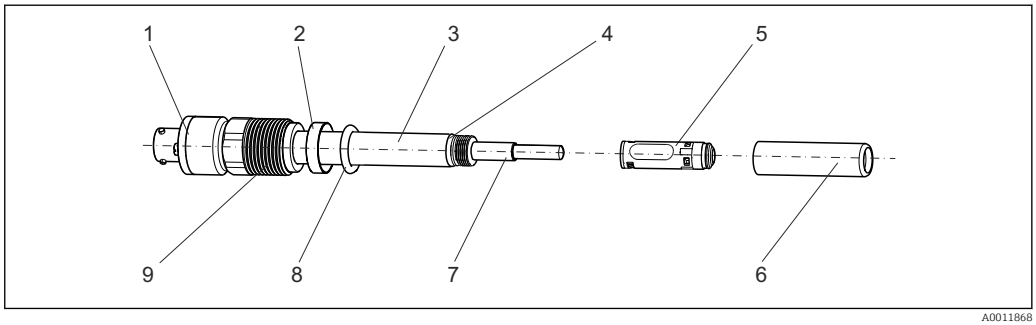

7 *COS22*

1	*Plug-in head*	*4*	*O-ring 8.5 x 1.5 mm*	*7*	*Glass portion with anode and cathode*
2	*Thrust collar*	*5*	*Membrane body*	*8*	*Process seal 10.77 x 2.62 mm*
3	*Sensor shaft*	*6*	*Shaft sleeve*	*9*	*Process connection Pg 13.5*

Dimensions

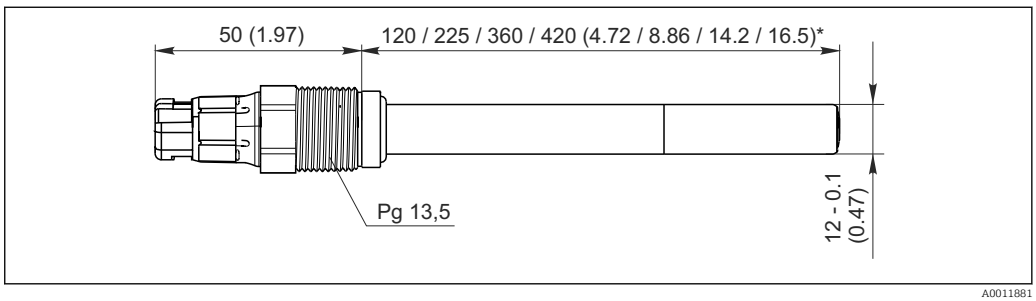

8 *Dimensions in mm (inch)*

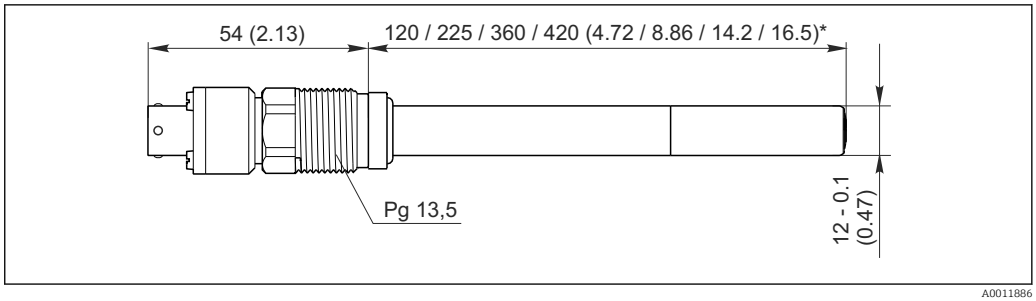

9 *Dimensions in mm (inch)*

Flow assembly for sensors with Ø 12 mm (accessories)

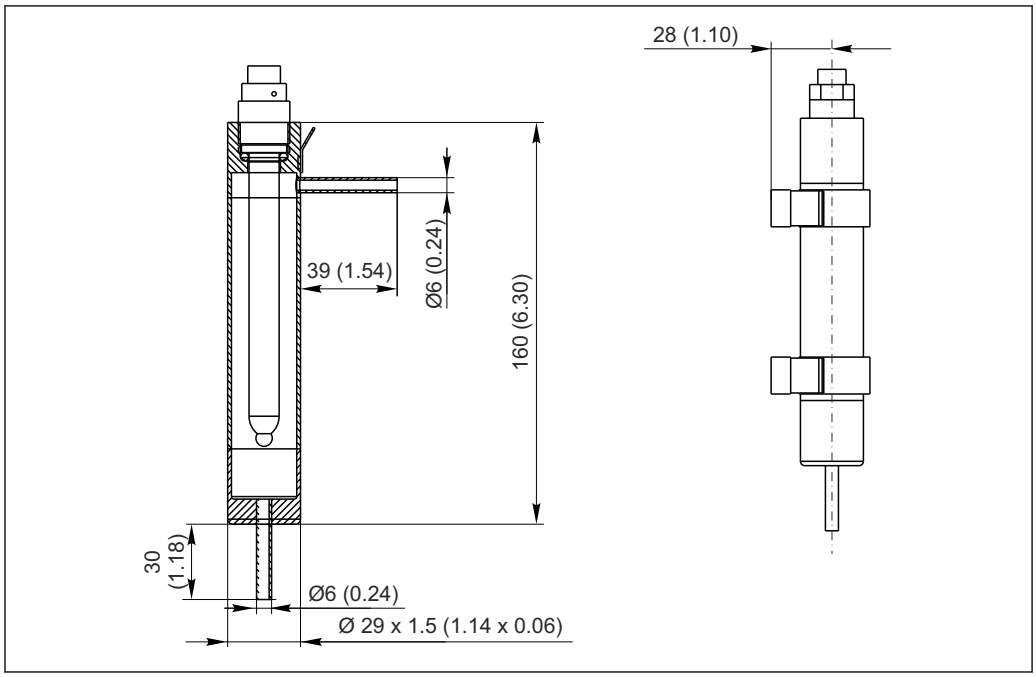

10 Dimensions in mm (inch)

Weight

Depending on the design (length)
0.2 kg (0.44 lbs) to 0.7 kg (1.54 lbs)

Materials

Parts in contact with medium

Sensor shaft (depending on the version)	Stainless steel 1.4435 (AISI 316L) Titanium Alloy C22
Electrode combination	COS22/22D-*1/3: silver / platinum COS22D-*4: silver / gold
Process seal	VITON (FDA-compliant)
Process seal for ATEX/FM/CSA/NEPSI/TIIS	VITON (not FDA-compliant)
Seals/O-rings	VITON (FDA-compliant)
Membrane body, sealing ring for shaft sleeve	Perfluoroelastomer with USP88 Class VI
Membrane	Silicone (FDA-compliant, in compliance with USP87/88 class VI), PTFE, steel mesh

Process connection

Pg 13.5

Surface roughness

R_a < 0.38 µm

Temperature sensor

NTC 22 kΩ

Electrolyte

COS22/22D-*1 (standard sensor):	Slightly alkaline electrolyte
COS22/22D-*3 (trace sensor):	Neutral electrolyte
COS22D-*4 (trace sensor, gold):	Slightly alkaline electrolyte

Certificates and approvals

CE mark

Declaration of Conformity

The product meets the requirements of the harmonized European standards. As such, it complies with the legal specifications of the EC directives. The manufacturer confirms successful testing of the product by affixing to it the CE mark.

Ex approvals

Version COS22D-BA
ATEX II 1G / IECEx Ex ia IIC T3/T4/T6 Ga
FM/CSA IS/NI Cl.1 Div.1 GP: A-D

Version COS22D-NA
NEPSI Ex ia IIC T3/T4/T6 Ga

Version COS22D-TA
TIIS Ex ib IIC T4

Material certificates

Manufacturer declaration of FDA compatibility

The manufacturer declares the use of FDA-listed materials.
Ask your Sales Center for the certificates.

Product	FDA certificate for
COS22/22D-****22	Membrane, O-rings, process seal
COS22Z-*2*2	Membrane, O-rings, process seal
COS22/22D-****23	Membrane, O-rings
COS22Z-*2*3	Membrane, O-rings

Hazardous area versions

For operation in FDA processes, another FDA-approved seal must be installed before the process seal (e.g. CPA442). Doing so will sufficiently separate the process from the Ex connection.

Material test certificate

A test certificate 3.1 in accordance with EN10204 is supplied depending on the version (→ Product Configurator on the product page).

Ordering information

Product page

www.endress.com/cos22

www.endress.com/cos22d

Product Configurator

The navigation area is located on the right of the product page.

1. Under "Device support" click "Configure your selected product".
   ↳ The Configurator opens in a separate window.
2. Select all the options to configure the device in line with your requirements.
   ↳ In this way, you receive a valid and complete order code for the device.
3. Export the order code as a PDF or Excel file. To do so, click the appropriate button at the top of the screen.

Scope of delivery

The scope of delivery comprises:

- Oxygen sensor with watering cap (filled with tap water) for protecting the membrane
- Electrolyte, 1 bottle, 10 ml (0.34 fl.oz.)
- Tool to push out the membrane body
- Brief Operating Instructions

Accessories

The following are the most important accessories available at the time this documentation was issued. For accessories not listed here, please contact your service or sales office.

Assemblies (selection)

Cleanfit CPA875
- Retractable process assembly for sterile and hygienic applications
- For in-line measurement with standard 12 mm sensors for parameters such as pH, ORP and oxygen
- Product Configurator on the product page: www.endress.com/cpa875

Technical Information TI01168C

Flowfit CPA240
- pH/redox flow assembly for processes with stringent requirements
- Product Configurator on the product page: www.endress.com/cpa240

Technical Information TI00179C

Unifit CPA442
- Installation assembly for food, biotechnology and pharmaceutics
- With EHEDG and 3A certificate
- Product Configurator on the product page: www.endress.com/cpa442

Technical Information TI00306C

Cleanfit CPA450
- Manual retractable assembly for installing 120 mm sensors in tanks and pipes
- Product Configurator on the product page: www.endress.com/cpa450

Technical Information TI00183C

Flow assembly
- For sensors with Ø 12 mm and length 120 mm
- Compact stainless steel assembly with low sampling volume
- Order No. Order No.: 71042404

Measuring cable

Cable for COS22D

Memosens data cable CYK10
- For digital sensors with Memosens technology
- Product Configurator on the product page: www.endress.com/cyk10

Technical Information TI00118C

Memosens data cable CYK11
- Extension cable for digital sensors with Memosens protocol
- Product Configurator on the product page: www.endress.com/cyk11

Technical Information TI00118C

Cable for COS22

COK21
- Cable length 3 m (9.8 ft)
  Order No. 51505870
- Cable length 10 m (33 ft)
  Order No. 51505868

Zero solution

Zero solution for oxygen and chlorine sensors
- Powder to produce oxygen-free/chlorine-free solution for test purposes
- Order No. 50001041

Maintenance kit

COS22Z
- Service Kit, COS22 and COS22D
- Ordering information: www.endress.com/cos22d under "Accessories/spare parts"

www.addresses.endress.com

Endress+Hauser

People for Process Automation

ENDRESS + HAUSER – PRESSURE TRANSMITTERS

Level | Pressure | Flow | Temperature | Liquid Analysis | Registration | Systems Components | Services | Solutions

Operating Instructions

Cerabar T PMC131

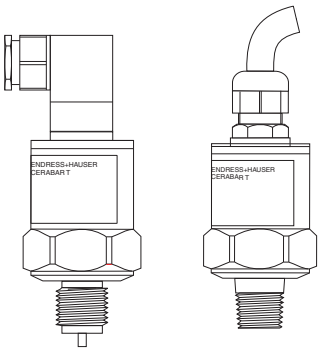

de – Drucktransducer
en – Pressure Transducer
fr – Transducteur de pression
it – Trasduttore di pressione
es – Transmisorde presión
nl – Druk-transducer

KA00085P/00/A6/13.12
71158704

Endress+Hauser
People for Process Automation

de - Inhalt

Geräte-Identifikation	4
Abmessungen	5
Montage	6
Elektrischer Anschluss	8
Technische Daten	10

en - Contents

Device Identification	4
Dimensions	5
Mounting	6
Electrical Connection	8
Technical Data	10

fr - Sommaire

Dénomination de l'appareil	4
Dimensions	5
Montage	6
Raccordement électrique	8
Caractéristiques techniques	10

de - Sicherheitshinweise

Der Cerabar T dient der Absolut- und Relativdruckmessung in Gasen, Dämpfen, Flüssigkeiten und Stäuben. Bei unsachgemäßem Einsatz können Gefahren von ihm ausgehen. Das Gerät darf nur von qualifiziertem und autorisiertem Fachpersonal unter strenger Beachtung dieser Betriebsanleitung und der Technischen Information TI00415P, der einschlägigen Normen, gesetzlichen Vorschriften und Zertifikate eingebaut, angeschlossen, in Betrieb genommen und gewartet werden.

en - Notes on Safety

The Cerabar T is designed for measuring absolute and gauge pressure of gases, vapours, liquids and dusts. If used incorrectly it is possible that application related dangers may arise.The Cerabar T may be installed, commissioned, operated and maintained by qualified and authorised personnel only, under strict observance of these operating instructions and Technical Information TI00415P, any relevant standards, legal requirements, and, where appropriate, the certificate.

fr - Conseils de sécurité

Le Cerabar T est destiné à la mesure de pression absolue et relative dans les gaz, vapeurs, liquides et poussières. Il peut être source de danger en cas d'utilisation non conforme aux prescriptions. L'appareil ne doit être installé, raccordé, mis en service et maintenu que par un personnel qualifié et autorisé, qui tiendra compte des indications contenues dans la présente mise en service et de l' Information Technique TI00415P, des normes en vigueur et des certificats disponibles (selon l'application).

es - Indice

Identificación del equipo	4
Dimensiones	5
Montaje	7
Conexiones eléctricas	8
Datos técnicos	10

it - Indice

Identificazione (strumento)	4
Dimensioni	5
Montaggio	7
Collegamento elettrico	8
Dati tecnici	10

nl - Inhoud

Instrument-identificatie	4
Afmetingen	5
Montage	7
Elektrische aansluiting	8
Omgevingscondities	10

es - Notas sobre seguridad

Cerabar T está diseñado para medir presión absoluta y relativa en gases, vapores, liquidos y sólidos pulvurulentos. Su empleo inapropiado puede resultar peligroso. El equipo deberá ser montado, conectado, instalado y mantenido única y exclusivamente por personal cualificado y autorizado, bajo rigurosa observación de las presentes instrucciones de servicio y de la Informatión Técnica TI00415P, de las normativas y legislaciones vigentes, así como de los certificados (dependiendo de la aplicación).

it - Note sulla sicurezza

Il Cerabar T è stato progettato per la misura della pressione assoluta e relativa di gas, vapori, liquidi e polveri. Un'installazione non corretta può determinare pericolo per le persone e le cose. Lo strumento deve essere montato collegato e messo in servizio solamente da personale qualificato ed autorizzato, nel totale rispetto delle indicazioni operative qui riportate, delle prescrizioni presenti nelle informazioni tecniche TI00415P ed in accordo a tutte le norme e legislazioni vigenti e le certificazioni utilizzate.

nl - Veiligheidsinstructies

De Cerabar T is ontworpen voor het meten absoluut en overdruk van gassen, dampen, vloeistoffen en vaste stoffen. Bij niet correct gebruik kunnen gevaarlijke situaties onstaan. Het instrument mag uitsluitend door gekwalificeerd en geautoriseerd vakpersoneel geinstalleerd, aangesloten en inbedrijf genomen worden met inachtneming van dit inbedrij-fstellingsvoorschrift, het bijbehorende Technisch Informatie blad TI00415P en de betreffende normen, de wettelijke voorschriften en eventuele certificaten in acht.

de - Geräte-Identifikation

en - Device Identification

fr - Dénomination de l'appareil

es - Identificación del equipo

it - Identificazione dello strumento

nl - Instrument-identificatie

1 = G ½A, ISO 228
1.4301 (AISI 304)

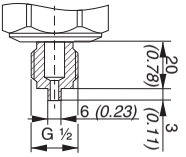

2 = ½ MNPT, ¼ FNPT,
1.4301 (AISI 304)

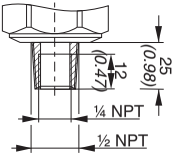

5 = G ½A, ø11 mm, ISO228
1.4301 (AISI 304)

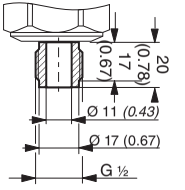

F = FKM Viton
S = FKM Viton, O_2

1 = ohne/without/sans/sin/senza/zonder
2 = Protokoll/Protocol/Protocole
S = German Lloyd

p

D10 = 0..100 mbar, 0...10 kPa
• • •
R4T = 0...500 psi a

de - Montage

- Die Funktion des Drucktransducers ist unabhängig von der Einbaulage.
- Zum Schutz des Gewindes und der Druckmembran darf die Schutzkappe am Gewindestutzen erst kurz vor dem Einbau entfernt werden.
- Der Drucktransducer ist nach den gleichen Richtlinien wie ein Manometer zu montieren. Wir empfehlen die Verwendung von Absperrhähnen und Wassersackrohren.
- Beim Einbau ist darauf zu achten, dass kein Tropfwasser in das Gehäuse eindringen kann.
- Einsatzgrenzen für Sauerstoff beachten (bei FKM Viton/O_2 gemäß BAM-Liste).
- Bei Anwendungen in explosionsfähiger Atmosphäre der Zone 2 (Zündschutzart Ex nA), Gehäuse vor Schlageinwirkung schützen.

en - Mounting

- The function of the transducer is independent of mounting orientation.
- To protect the thread and pressure diaphragm from damage, the protective cover on the threaded nozzle should be removed just before installation only.
- The pressure transducer is to be mounted like a manometer. The guidelines are identical. Isolating valves and water pocket pipes should be used.
- When installing, ensure that no water enters the housing.
- Note the application limits for oxygen (for FKM Viton/O_2 as per BAM list).
- In the event of applications in a Zone 2 explosive atmosphere (Ex nA explosion protection) protect the housing from impact.

fr - Montage

- Le fonctionnement du transducteur de pression est indépendant de son implantation.
- Afin de protéger le filetage et la membrane, ne retirer le capot de protection, placé sur le raccord fileté, qu'au moment du montage.
- Le transducteur de pression doit être monté conformément aux directives concernant les manomètres. Nous recommandons l'utilisation de robinets d'isolement et de siphons.
- Lors du montage, veiller à ce qu'il n'y ait pas d'infiltration d'eau dans le boîtier.
- Tenir compte des limites d'utilisation sur l'oxygène (pour FKP Viton/O_2 selon liste BAM).
- Les applications en atmosphère explosible de zone 2 (mode de protection antidéflagrant Ex nA), protéger le boîtier contre les chocs.

es - Montaje

- El funcionamiento del transmisor de presión es independiente de la orientación de montaje.
- No retirar la protección del casquillo roscado hasta el momento previo a su instalación para evitar dañar la rosca o el diafragma de presión.
- El transmisor de presión se deberá montar como un manómetro. El procedimiento es el mismo. Utilizar válvulas de corte y sifón.
- Durante la instalación asegurar que no entre agua en la caja.
- Observar los límites de utilización en oxígeno (para FKP Viton/O_2 según lista BAM).
- En las aplicaciones en atmósferas con riesgo de explosión de la zona 2 (tipo de protección contra ignición Ex nA) se debe proteger la carcasa contra el efecto de los impactos.

it - Montaggio

- Il funzionamento del trasduttore non dipende dalla posizione di montaggio.
- Per proteggere la filettatura e la membrana di pressione da eventuali danneggiamenti, eliminare il coperchio di protezione dell'ugello filettato solo immediatamente prima dell'installazione.
- Il trasduttore di pressione deve essere montato come un manometro. Utilizzare solo valvole di arresto e tubi separatori d'acqua.
- Durante l'installazione, assicurarsi che non entri acqua nella custodia.
- Osservare i limiti operativi per ossigeno (per FKM Viton/O_2 in accordo con lista BAM).
- Per l'utilizzo in ambienti a rischio di esplosione della zona 2 (Protezione antideflagrante Ex nA), proteggere le custodie contro gli urti.

nl - Montage

- Het functioneren van de Druk-transducer is onhafhankelijk van de montagepositie.
- Ter bescherming van de buitendraad en het membraan moet de beschermhuls pas vlak voor de montage verwijderd worden.
- De Druk-transducer moet identiek als een manometer gemonteerd worden. De richtlijnen t.a.v. gebruik van afsluitkranen, afstandsstukken en watersloten moeten worden aangehouden.
- Bij installatie ervoor zorgen dat er geen water in de behuizing kan komen, ook niet via de connector/wartel.
- Toepassingen in zuurstof bekijken (met FKM Viton/O_2 conform BAM lijst).
- Bescherm de behuizing tegen schokken bij toepassingen in explosiegevaarlijke atmosferen zone 2 (ontstekingsklasse Ex nA).

de - **Elektrischer Anschluss**
Stecker-Version

en - **Electrical Connection**
Plug version

fr - **Raccordement électrique**
Version connecteur

es - **Conexión eléctrica**
Con conector

it - **Collegamento elettrico**
Spina

nl - **Elektrische aansluiting**
Steker-versie

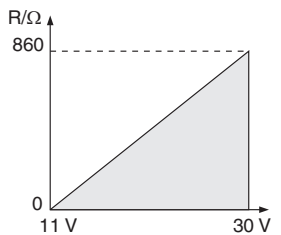

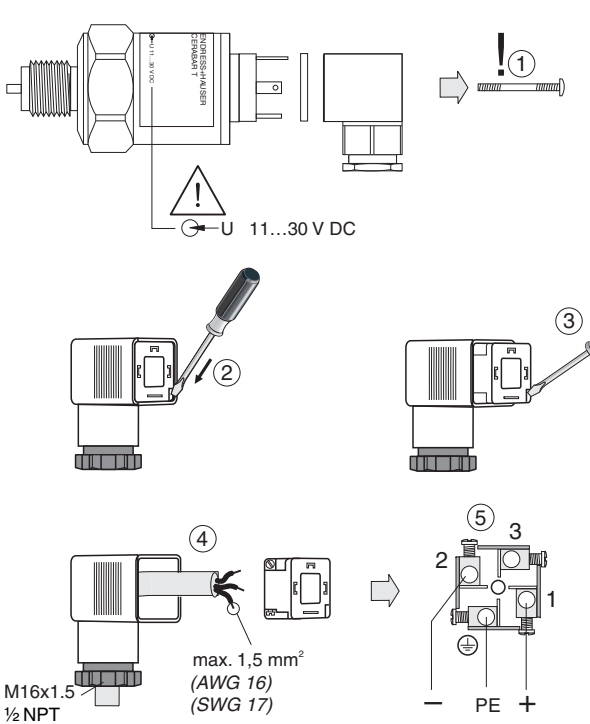

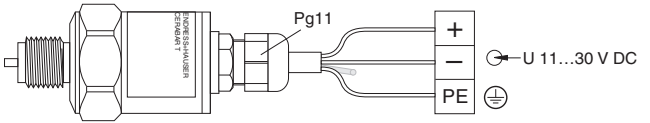

de - Referenzluft- Zuführung
Nicht verschließen! Vor Wasser schützen!

en - Reference air tube
Do not close! Protect from water!

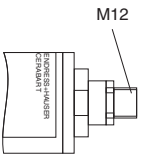

fr - Mise à l'atmosphère
Ne pas boucher! Prótéger de l'eau!

es - Tubo de compensación de presión atmosférica
No tapar! Proteger del agua!

it - Ingresso aria di riferimento
Non chiudere! Proteggere dall'acqua!

nl - Drukvereffening
Niet laten vervuilen en beschermen tegen vocht!

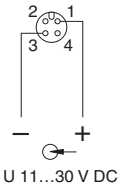

de + = rot; – = schwarz, PE = grün/gelb
en + = red; – = black, PE = green/yellow
fr + = rouge; – = noir, PE = vert/jaune
es + = rojo, – = negro, PE = verde/amarillo
it + = rosso, – = nero, PE = verde/giallo
nl + = rood; – = zwart, PE = groen/geel

de - Elektrischer Anschluß
Kabel-/Stecker-Version

en - Electrical Connection
Cable/plug version

fr - Raccordement électrique
Version câble/connecteur

es - Conexión eléctrica
Cable/conector

it - Collegamento elettrico
Cavo/spina

nl - Elektrische aansluiting
Kabel-/steker-versie

de - Einsatzbedingungen

- Umgebungstemperatur: –20…85 °C
- Lagerungstemperatur: –50…100 °C
- Meßstofftemperaturgrenze: max. 100 °C
- Meßstoffdruckgrenze: p_{max}
- Geräte mit CSA GP-Zulassung dürfen nur mit einer SELV oder Class 2 Spannungsversorgung betrieben werden.

en - Operating Conditions

- Ambient temperature range: –20…85°C
- Storage temperature range: –50…100°C
- Limiting temperature range: max. 100°C
- Limiting pressure range: p_{max}
- Devices with CSA GP approval may only be operated with a SELV or Class 2 power supply.

fr - Conditions d'utilisation

- Température ambiante: –20…85 °C
- Température de stockage: –50…100 °C
- Limite de température du produit: max. 100 °C
- Limite de pression du produit: p_{max}
- Les appareils avec agrément CSA GP ne doivent être utilisés qu'avec une tension d'alimentation SELV ou Class 2.

es - Condiciones de operación

- Rango de temperatura ambiental: –20…85 °C
- Rango de temperatura de almacenamiento: –50…100 °C
- Temperatura máxima de trabajo: máx. 100 °C
- Presión máx. de trabajo: p_{max}
- Los equipos con la certificación CSA GP sólo pueden trabajar con alimentación de clase 2 o SELV.

it - Condizioni operative

- Temperatura ambiente: –20…85 °C
- Temperatura per la conservazione in magazzino: –50…100 °C
- Temperatura limite del prodotto: max. 100 °C
- Pressione limite del prodotto: p_{max}
- Strumenti con approvazione CSA GP possono essere alimentati solo con unità tipo SELV o Classe 2

nl - Omgevingscondities

- Omgevingstemperatuur: –20…+85 °C
- Opslagtemperatuur: –50…100 °C
- Producttemp. : max. 100 °C
- max. procesdruk: p_{max}
- Instrumenten met een CSA GP certificaat mogen uitsluitend via een SELV of een klasse 2 voeding gevoed worden.

www.endress.com/worldwide

KA00085P/00/A6/13.12 71158704/CCS/FM9

71158704

ENDRESS + HAUSER – FLOWMETERS

Technical Information
Proline Promag 10D
Electromagnetic flowmeter

The highly cost-effective flowmeter, available as compact wafer

Application

- The measuring principle is virtually independent of pressure, density, temperature and viscosity
- For basic water applications; optimized for limited space and plastic pipe installations

Device properties
- Short installation length and low weight
- Integrated ground disks made of stainless steel
- International drinking water approvals
- 2-line display with push buttons
- Device in compact or remote version
- HART

Your benefits

- Easy, fast centering of the sensor – innovative housing construction
- Energy-saving flow measurement – no pressure loss due to cross-section construction
- Maintenance-free – no moving parts
- Cost-effective – designed for easy applications and direct integration
- Safe operation – display provides easy readable process information
- Fully industry compliant – IEC/EN/NAMUR

Endress+Hauser
People for Process Automation

Table of contents

Function and system design 3
Measuring principle 3
Measuring system 3

Input 3
Measured variable 3
Measuring range 4
Operable flow range 4

Output 4
Output signal 4
Signal on alarm 4
Load 5
Low flow cut off 5
Galvanic isolation 5

Power supply 5
Terminal assignment 5
Supply voltage 5
Power consumption 5
Power supply failure 5
Electrical connection 6
Electrical connection remote version 6
Potential equalization 7
Cable entries 8
Cable specification remote version 8

Performance characteristics 9
Reference operating conditions 9
Maximum measured error 9
Repeatability 9

Installation 10
Mounting location 10
Orientation 11
Inlet and outlet runs 12
Adapters 12
Mounting kit 13
Length of connecting cable 14

Environment 14
Ambient temperature range 14
Storage temperature 14
Degree of protection 14
Shock and vibration resistance 14
Electromagnetic compatibility (EMC) 14

Process 15
Medium temperature range 15
Medium pressure range 15
Conductivity 15
Pressure-temperature ratings 15
Pressure tightness 15
Limiting flow 15
Pressure loss 15
Vibrations 16

Mechanical construction 17
Design, dimensions 17
Weight 23
Measuring tube specifications 23
Material 24
Mounting bolts 24
Fitted electrodes 24
Process connections 25

Operability 25
Local operation 25
Remote operation 25

Certificates and approvals 25
CE approval 25
C-tick symbol 25
Ex approval 25
Drinking water approval 25
Other standards and guidelines 25

Ordering information 26

Accessories 26
Device-specific accessories 26
Measuring principle-specific accessories 26
Communication-specific accessories 27
Service-specific accessories 28

Documentation 28

Registered trademarks 28

Function and system design

Measuring principle

Following *Faraday's law of magnetic induction*, a voltage is induced in a conductor moving through a magnetic field.

In the electromagnetic measuring principle, the flowing fluid is the moving conductor.
The voltage induced is proportional to the flow velocity and is supplied to the amplifier by means of two measuring electrodes. The flow volume is calculated by means of the pipe cross-sectional area. The DC magnetic field is created through a switched direct current of alternating polarity.

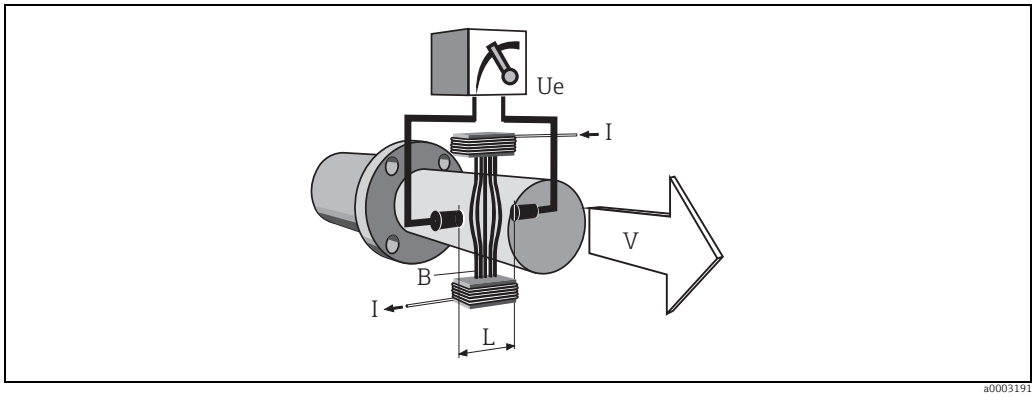

a0003191

$Ue = B \cdot L \cdot v$
$Q = A \cdot v$

Ue *Induced voltage*
B *Magnetic induction (magnetic field)*
L *Electrode spacing*
v *Flow velocity*
Q *Volume flow*
A *Pipe cross-section*
I *Current strength*

Measuring system

The measuring system consists of a transmitter and a sensor.

Two versions are available:
- Compact version: Transmitter and sensor form a mechanical unit.
- Remote version: Sensor is mounted separate from the transmitter.

Transmitter:
- Promag 10
  (key operation, two-line, unilluminated display)

Sensor:
- Promag D as wafer version
  DN 25 (1"), 40 (1 ½"), 50 (2"), 65 (–), 80 (3"), 100 (4")
- Promag D with threaded connection
  DN 25 (1"), 40 (1 ½"), 50 (2")

Input

Measured variable

Flow velocity (proportional to induced voltage)

Measuring range

Typically v = 0.01 to 10 m/s (0.033 to 33 ft/s) with the specified accuracy

Flow characteristic values (SI units)					
Diameter		Recommended flow	Factory settings		
[mm]	[inch]	min./max. full scale value (v ~ 0.3 bzw. 10 m/s) [dm³/min]	Full scale value current output (v ~ 2.5 m/s) [dm³/min]	Pulse value (~ 2 pulses/s) [dm³]	Low flow cut off (v ~ 0.04 m/s) [dm³/min]
25	1"	9 to 300	75	0.50	1
40	1 ½"	25 to 700	200	1.50	3
50	2"	35 to 1100	300	2.50	5
65	–	60 to 2000	500	5.00	8
80	3"	90 to 3000	750	5.00	12
100	4"	145 to 4700	1200	10.00	20

Flow characteristic values (US units)					
Diameter		Recommended flow	Factory settings		
[inch]	[mm]	min./max. full scale value (v ~ 0.3 bzw. 10 m/s) [gal/min]	Full scale value current output (v ~ 2.5 m/s) [gal/min]	Pulse value (~ 2 pulses/s) [gal]	Low flow cut off (v ~ 0.04 m/s) [gal/min]
1"	25	2.5 to 80	18	0.20	0.25
1 ½"	40	7 to 190	50	0.50	0.75
2"	50	10 to 300	75	0.50	1.25
–	65	16 to 500	130	1.00	2.00
3"	80	24 to 800	200	2.00	2.50
4"	100	40 to 1250	300	2.00	4.00

Operable flow range

Over 1000 : 1

Output

Output signal

Current output

- Galvanically isolated
- Active: 4 to 20 mA, R_L < 700 Ω (for HART: R_L ≥ 250 Ω)
- Full scale value adjustable
- Temperature coefficient: typ. 2 µA/°C, resolution: 1.5 µA

Pulse/status output

- Galvanically isolated
- Passive: 30 V DC / 250 mA
- Open collector
- Can be configured as:
  - Pulse output
    Pulse value and pulse polarity can be selected, max. pulse width adjustable (5 to 2000 ms), pulse frequency max. 100 Hz
  - Status output
    For example, can be configured for error messages, flow recognition, limit value

Signal on alarm

Current output

Failsafe mode can be selected (e.g. in accordance with NAMUR Recommendation NE 43)

Pulse output

Failsafe mode can be selected

Status output

"Not conductive" in the event of fault or power supply failure

Load

See "Output signal"

Low flow cut off

Low flow cut off, switch-on point can be selected as required

Galvanic isolation

All circuits for inputs, outputs and power supply are galvanically isolated from each other

Power supply

Terminal assignment

Order characteristic for "inputs/outputs"	Terminal No.					
	24 (+)	25 (–)	26 (+)	27 (–)	1 (L1/L+)	2 (N/L–)
A	Pulse/status output		HART current output		Power supply	
Functional values	See "Output signal"				See "Supply voltage"	

Supply voltage

- 85 to 250 V AC, 45 to 65 Hz
- 20 to 28 V AC, 45 to 65 Hz
- 11 to 40 V DC

Power consumption

Power consumption
- 85 to 250 V AC: < 12 VA (incl. sensor)
- 20 to 28 V AC: < 8 VA (incl. sensor)
- 11 to 40 V DC: < 6 W (incl. sensor)

Switch-on current
- Max. 16 A (< 5 ms) for 250 V AC
- Max. 5.5 A (< 5 ms) for 28 V AC
- Max. 3.3 A (< 5 ms) for 24 V DC

Power supply failure

Lasting min. ½ cycle frequency: EEPROM saves measuring system data

Electrical connection

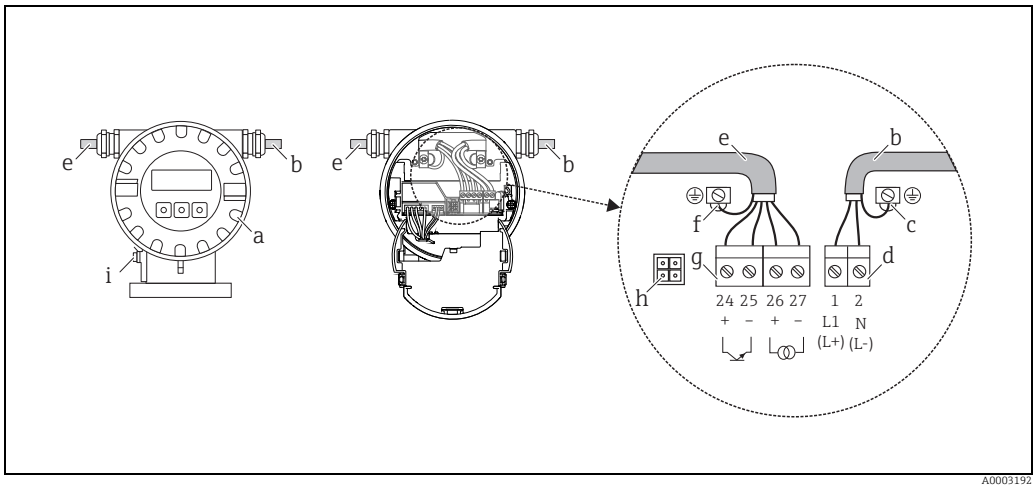

A0003192

Connecting the transmitter, cable cross-section max. 2.5 mm² (14 AWG)

a Electronics compartment cover
b Power supply cable
c Ground terminal for protective ground
d Terminal connector for power supply cable
e Signal cable
f Ground terminal for signal cable
g Terminal connector for signal cable
h Service connector
i Ground terminal for potential equalization

Electrical connection remote version

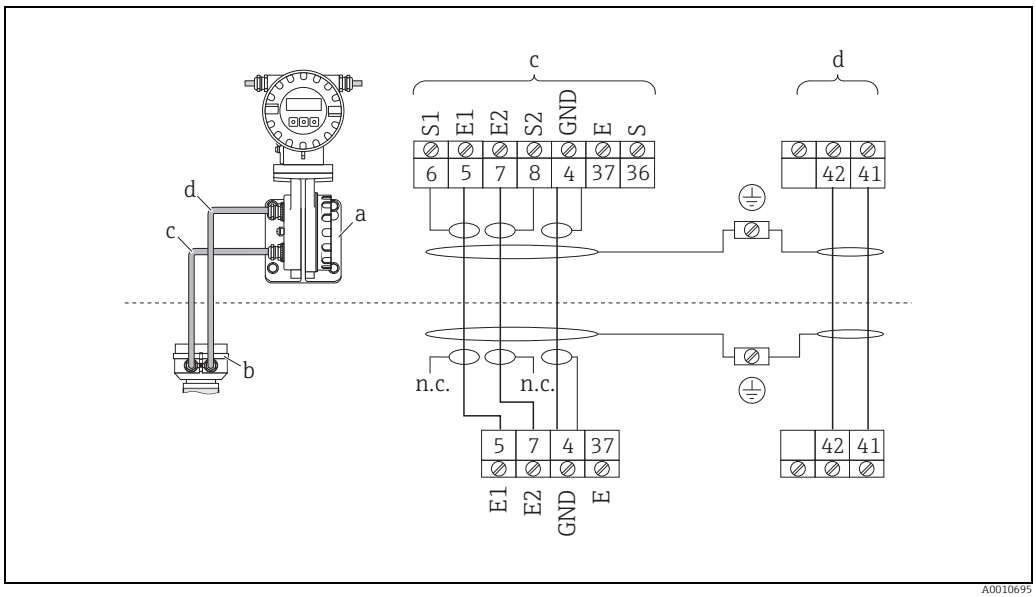

A0010695

Connecting the remote version

a Wall-mount housing connection compartment
b Sensor connection housing
c Signal cable
d Coil current cable
n.c. Not connected, insulated cable shields

Cable colors/numbers for terminals:
5/6 = brown, 7/8 = white, 4 = green, 41 = 1, 42 = 2

Potential equalization

Perfect measurement can only be guaranteed if the fluid and sensor are on the same electric potential. This is ensured by the two ground disks of the sensor.

The following should also be taken into consideration for potential equalization:
- Internal grounding concepts in the company
- Operating conditions, such as the material/grounding of the pipes, cathodic protection etc. (see table)

Standard

Operating conditions	Potential equalization
When using the measuring device in a: ▪ Metal, grounded pipe ▪ Plastic pipe ▪ Pipe with insulating lining Potential equalization takes place via the ground terminal of the transmitter (standard situation). ✎ Note! When installing in metal pipes, we recommend you connect the ground terminal of the transmitter housing with the piping.	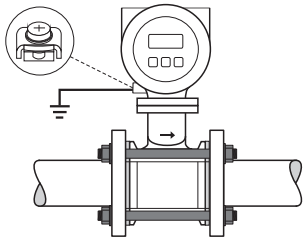 A0010702 *Via the ground terminal of the transmitter*

Special cases for Promag D as wafer version

Operating conditions	Potential equalization
When using the measuring device in a: ▪ Metal pipe that is not grounded This connection method also applies in situations where: ▪ Customary potential equalization cannot be ensured ▪ Excessively high equalizing currents can be expected Potential equalization takes place via the ground terminal of the transmitter and the two pipe flanges. Here, the ground cable (copper wire, 6 mm² / 10 AWG) is mounted directly on the conductive flange coating with flange screws.	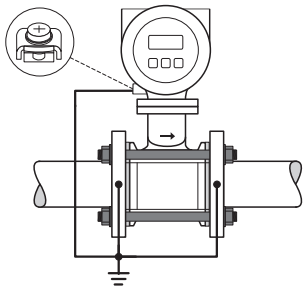 A0010703 *Via the ground terminal of the transmitter and the flanges of the pipe (ground cable: copper wire at least 6 mm² / 10 AWG)*
When using the measuring device in a: ▪ Pipe with a cathodic protection unit The device is installed potential-free in the pipe. Only the two flanges of the pipe are connected with a ground cable (copper wire, 6 mm² / 10 AWG). Here, the ground cable is mounted directly on the conductive flange coating with flange screws. Note the following when installing: ▪ The applicable regulations regarding potential-free installation must be observed. ▪ There should be **no** electrically conductive connection between the pipe and the device. ▪ The mounting material must withstand the applicable torques.	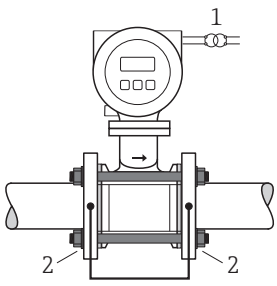 A0010704 *Potential equalization and cathodic protection (ground cable: copper wire at least 6 mm² / 10 AWG)* *1 Power supply isolation transformer* *2 Electrically isolated*

Cable entries

Power supply and signal cables (inputs/outputs):

- Cable entry M20 × 1.5 (8 to 12 mm / 0.31 to 0.47")
- Thread for cable entries, ½" NPT, G ½"

Connecting cable for remote version:

- Cable entry M20 × 1.5 (8 to 12 mm / 0.31 to 0.47")
- Thread for cable entries, ½" NPT, G ½"

Cable specification remote version

Coil current cable

- 3 × 0.75 mm² (18 AWG) PVC cable with common, braided copper shield (Ø ~ 9 mm / 0.35")
- Conductor resistance: ≤ 37 Ω/km (≤ 0.011 Ω/ft)
- Capacitance core/core, shield grounded: ≤ 120 pF/m (≤ 37 pF/ft)
- Operating temperature: –20 to +80 °C (–4 to +176 °F)
- Cable cross-section: max. 2.5 mm² (16 AWG)
- Test voltage for cable insulation: ≥ 1433 V AC r.m.s. 50/60 Hz or ≥ 2026 V DC

Electrode cable

- 3 × 0.38 mm² (20 AWG) PVC cable with common, braided copper shield (Ø ~ 9,5 mm / 0.37") and individual shielded cores
- Conductor resistance: ≤ 50 Ω/km (≤ 0.015 Ω/ft)
- Capacitance core/shield: ≤ 420 pF/m (≤ 128 pF/ft)
- Operating temperature: –20 to +80 °C (–4 to +176 °F)
- Cable cross-section: max. 2.5 mm² (16 AWG)

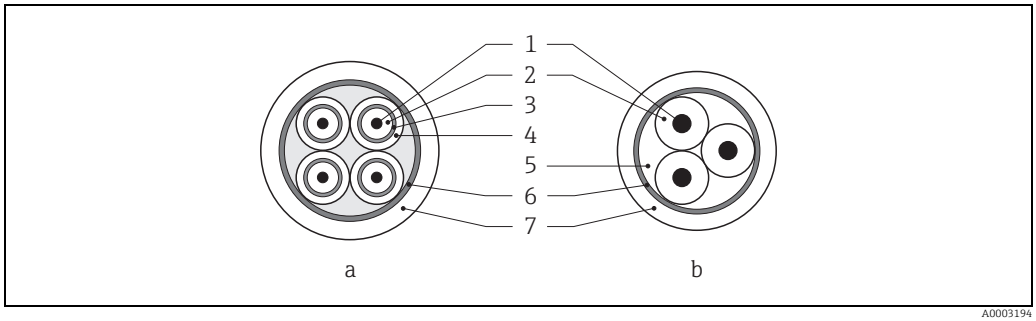

A0003194

a *Signal cable*
b *Coil current cable*

1 *Core*
2 *Core insulation*
3 *Core shield*
4 *Core jacket*
5 *Core reinforcement*
6 *Cable shield*
7 *Outer jacket*

Operation in zones of severe electrical interference

The measuring device complies with the general safety requirements in accordance with EN 61010-1, the EMC requirements of IEC/EN 61326 and NAMUR Recommendation NE 21.

Caution!
Grounding is by means of the ground terminals provided for the purpose inside the connection housing.
Ensure that the stripped and twisted lengths of cable shield to the ground terminal are as short as possible.

Performance characteristics

Reference operating conditions

- Error limits following DIN EN 29104, future ISO 20456
- Water, typically +4 to +35°C (+39 to +95 °F); 2 to 6 bar (29 to 87 psi)
- Specification as per calibration protocol ± 5°C (± 41 °F) and ± 2 bar (± 29 psi)
- Data on the measured error based on accredited calibration rigs traced back to ISO 17025

Maximum measured error

- Current output: also typically ±5 µA
- Pulse output: ±0.5% o.r. ± 2 mm/s (±0.5% o.r. ± 0.08 in/s) (o.r. = of reading)

Fluctuations in the supply voltage do not have any effect within the specified range.

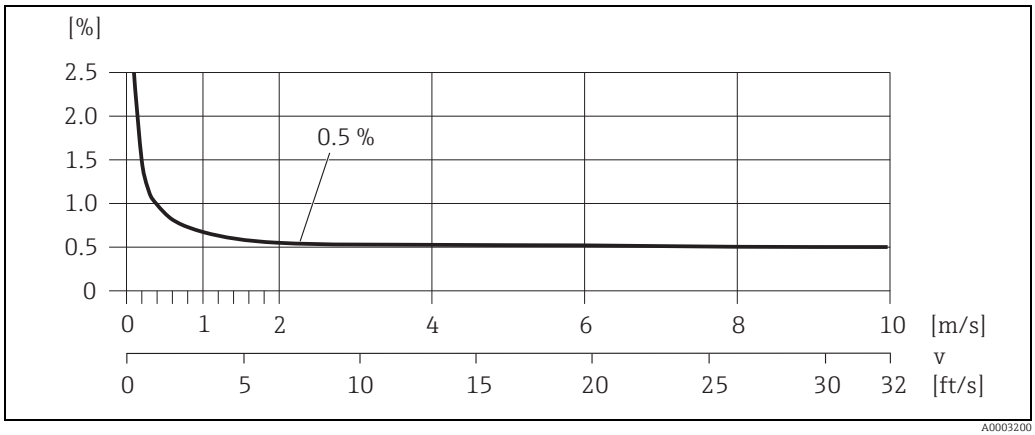

Max. measured error in % of reading

Repeatability

Max. ±0.2% o.r. ± 2 mm/s (±0.2% o.r. ± 0.08 in/s) (o.r. = of reading)

Installation

Mounting location

The sensor should preferably be installed in an ascending pipe. Ensure the sensor is an adequate distance (≥ 2 × DN) away from the next pipe bend.

Note!
Entrained air or gas bubble formation in the measuring tube can result in an increase in measuring errors.
For this reason, the following mounting locations should be **avoided**:
- Highest point of a pipeline. Risk of air accumulating!
- Directly upstream from a free pipe outlet in a vertical pipeline. Risk of pipe not filling correctly!

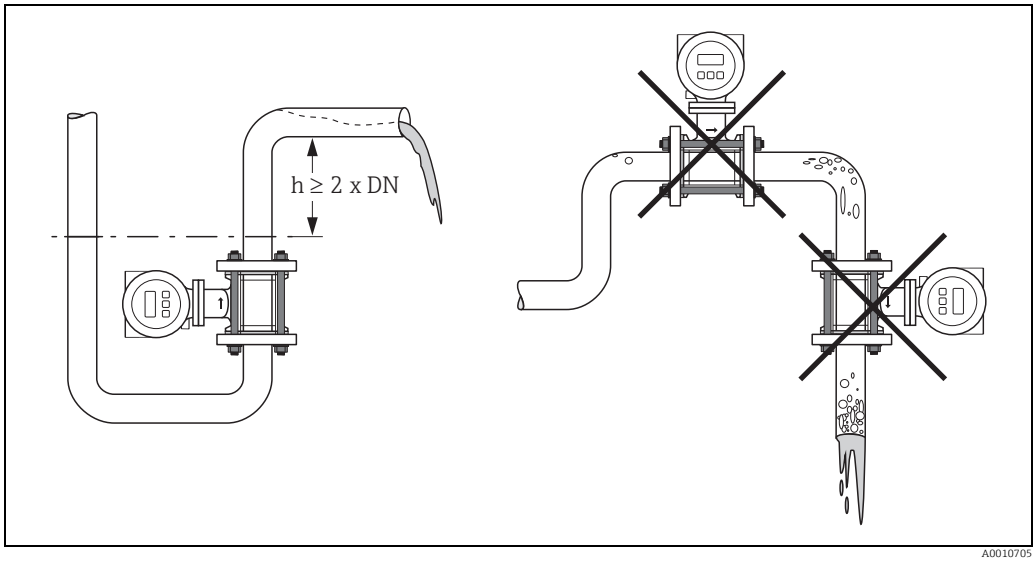

Mounting location

Installation with pumps

The sensor should only be installed on the pump pressure side.

Note!
- The sensor should **never** be installed on the pump suction side in order to avoid the risk of low pressure, and thus damage to the measuring tube.
  Information on the pressure tightness of the measuring tube → 15, section "Pressure tightness".
- Pulsation dampers may be needed if the sensor is installed downstream from piston pumps, piston diaphragm pumps or hose pumps.
  Information on the shock and vibration resistance of the device → 14, section "Shock and vibration resistance".

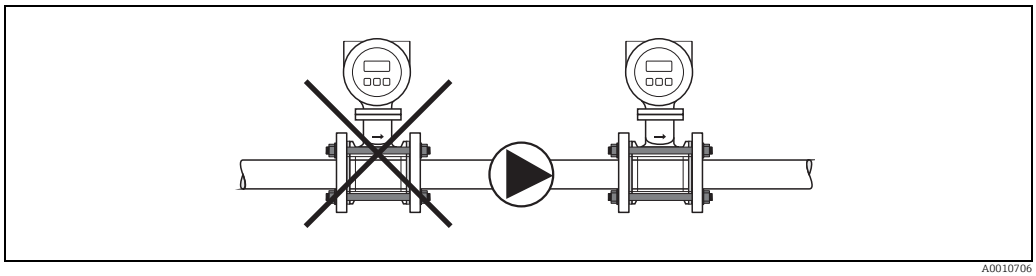

Installing the device with a pump

Partially filled pipes

Partially filled pipes with gradients necessitate a drain-type configuration.

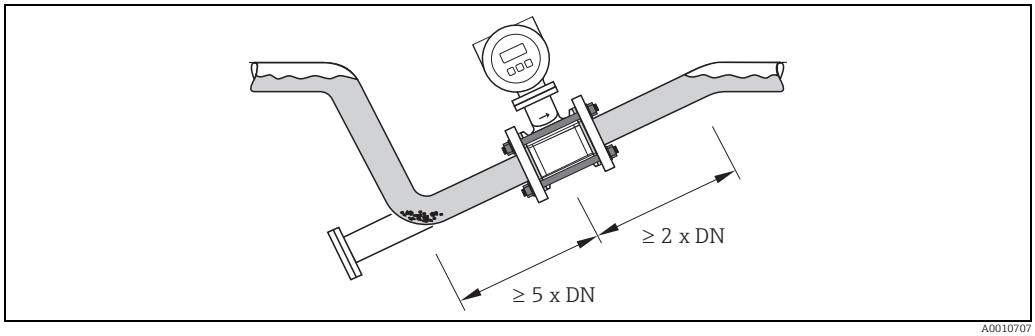

Installation with partially filled pipes

Down pipes

Install a siphon or a vent valve downstream of the sensor in down pipes h ≥ 5 m (16,4 ft). This precaution is to avoid low pressure and the consequent risk of damage to the measuring tube. This measure also prevents the system losing prime, which could cause air pockets. Information on the pressure tightness of the measuring tube → 🖹 15, section "Pressure tightness".

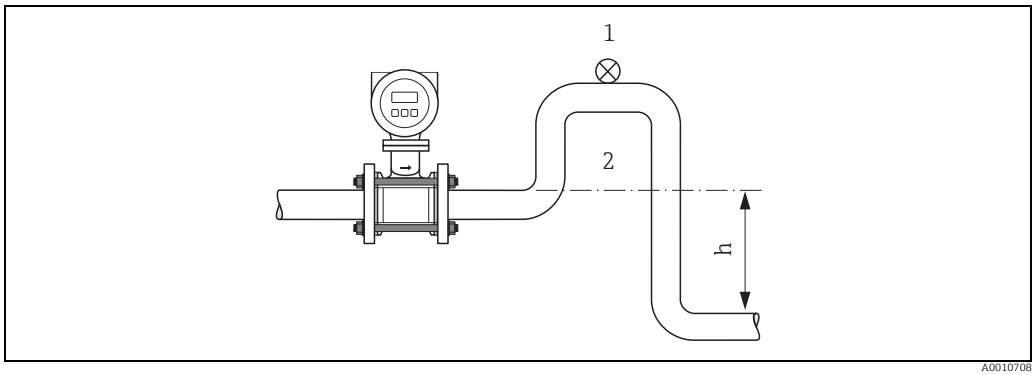

Installation measures for down pipes

1 Vent valve
2 Pipe siphon
h Length of the down pipe

Orientation

Vertical	Horizontal
Vertical orientation is generally preferred. Vertical orientation helps avoid gas and air accumulations and deposits in the measuring tube.	The measuring electrode axis should be horizontal in the case of horizontal orientations. This prevents brief insulation of the two measuring electrodes by entrained air bubbles.
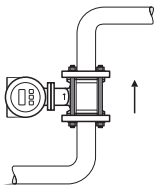 A0010709	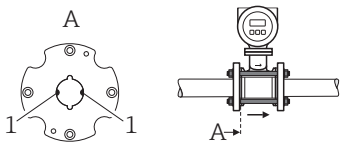 A0010710
Vertical orientation	*Horizontal orientation* *1 Measuring electrodes for signal detection*

Inlet and outlet runs

If possible, install the sensor well clear of assemblies such as valves, T-pieces, elbows etc.

The following inlet and outlet runs must be observed in order to meet accuracy specifications:
- Inlet run ≥ 5 × DN
- Outlet run ≥ 2 × DN

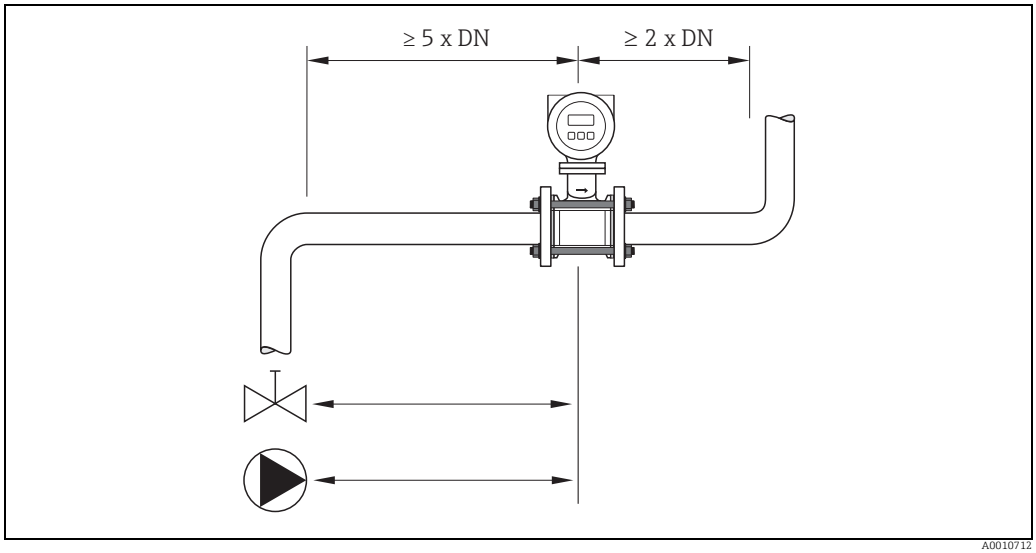

Inlet and outlet run

Adapters

Suitable adapters to DIN EN 545 (double-flange reducers) can be used to install the sensor Promag D as wafer version in larger-diameter pipes. The resultant increase in the rate of flow improves measuring accuracy with very slow-moving fluids. The nomogram shown here can be used to calculate the pressure loss caused by reducers and expanders.

Note!
- Adapters can not be used for Promag D with threaded connection.
- The nomogram only applies to liquids of viscosity similar to water.

The pressure loss is calculated as follows:

1. Calculate the diameter ratio: d/D
2. Read off the pressure loss (as a function of flow velocity (downstream from the reduction) and the d/D ratio from the nomogram)

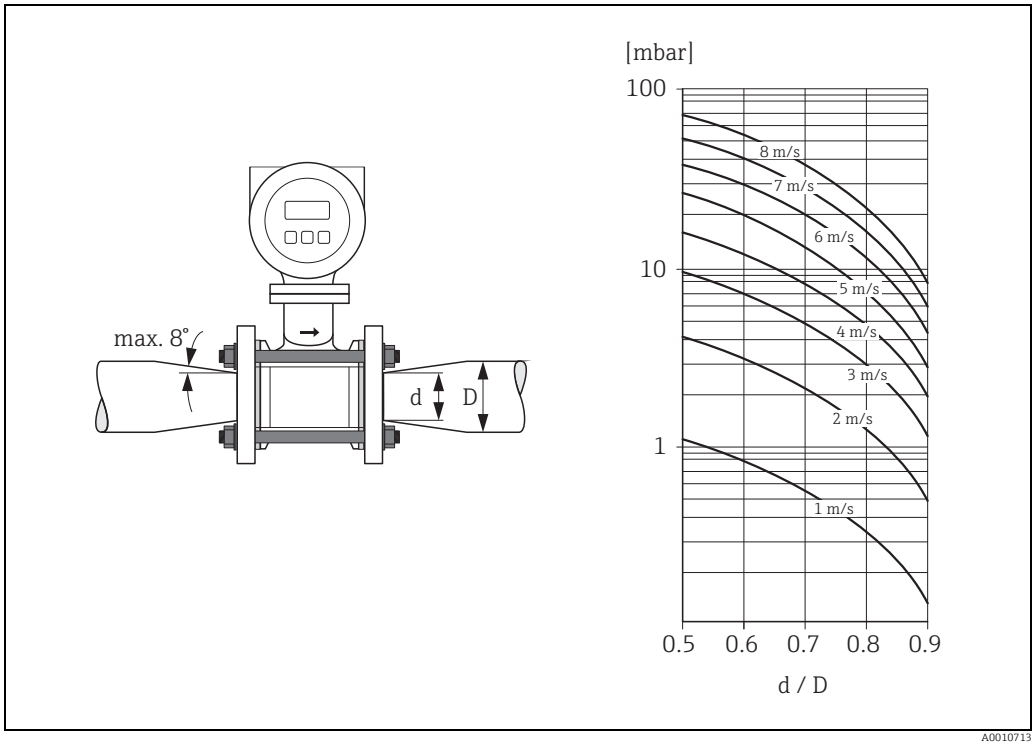

Pressure loss due to adapters

Mounting kit

The sensor Promag D as wafer version is installed between the pipe flanges with a mounting kit. The device is centered using the recesses on the sensor. Centering sleeves are also provided depending on the flange standard or the diameter of the pitch circle.

Note!
- For the sensor Promag D with threaded connection no mounting kit is required.
- A mounting kit consisting of mounting bolts, seals, nuts and washers can be ordered separately (see "Accessories").

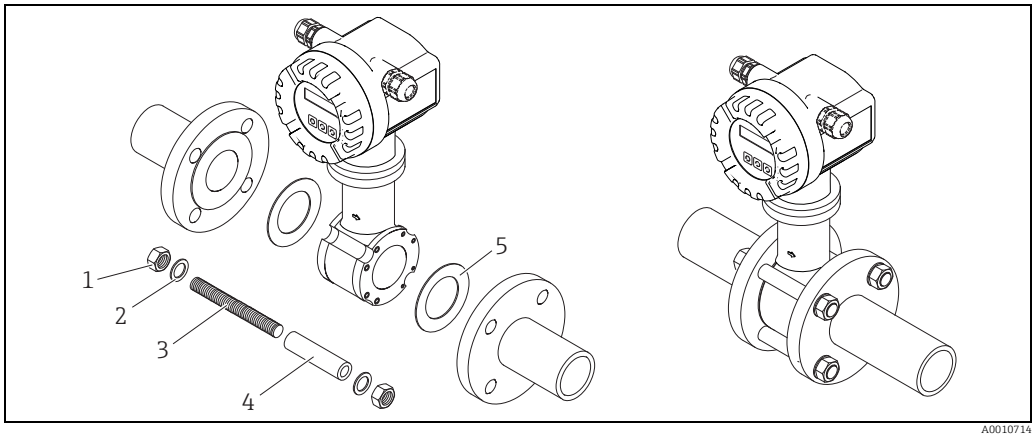

Mounting the sensor Promag D as wafer version

1 Nut
2 Washer
3 Mounting bolt
4 Centering sleeve
5 Seal

Length of connecting cable

Note the following when mounting the remote version:

- Fix cable run or lay in armored conduit.

  ✎ Note!
  Cable movements can falsify the measuring signal especially in the case of low fluid conductivities.

- Route the cable well clear of electrical machines and switching elements.
- If necessary, establish potential equalization between the sensor and transmitter.
- The permitted cable length L_{max} is determined by the fluid conductivity. A minimum conductivity of 50 µS/cm is needed for all fluids.

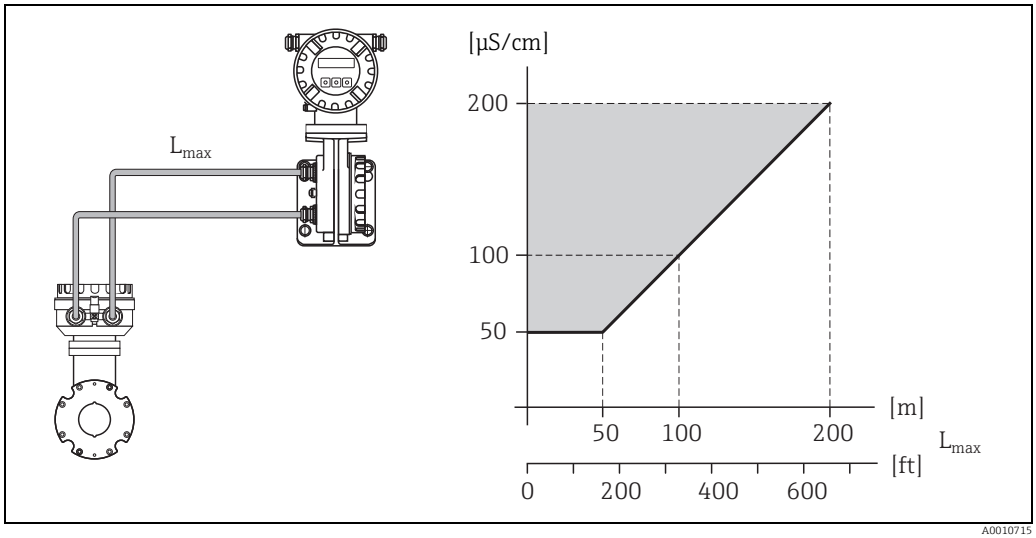

Permitted length of connecting cable for remote version
– The area shaded gray marks the permitted range
– Length of connecting cable L_{max}
– Fluid conductivity in [µS/cm]

Environment

Ambient temperature range

- Sensor: –20 to +60 °C (–4 to +140 °F)
- Transmitter: –20 to +60 °C (–4 to +140 °F)

Caution!
- The permitted temperature range of the measuring tube lining may not be undershot or overshot (→ 🖹 15, section "Medium temperature range").
- Install the device in a shady location. Avoid direct sunlight, particularly in warm climatic regions.
- The transmitter must be mounted separate from the sensor if both the ambient and fluid temperatures are high.

Storage temperature

- Sensor: –20 to +60 °C (–4 to +140 °F)
- Transmitter: –20 to +60 °C (–4 to +140 °F)

Caution!
- The measuring device must be protected against direct sunlight during storage in order to avoid unacceptably high surface temperatures.
- A storage location must be selected where moisture does not collect in the measuring device. This will help prevent fungus and bacteria infestation which can damage the liner.

Degree of protection

IP 67 (NEMA 4X) for transmitter and sensor

Shock and vibration resistance

Acceleration up to 2 g following IEC 600 68-2-6

Electromagnetic compatibility (EMC)

- As per IEC/EN 61326 and NAMUR Recommendation NE 21
- Emission: to limit value for industry EN 55011

Process

Medium temperature range

0 to +60 °C (+32 to +140 °F)

Medium pressure range

- EN 1092-1 (DIN 2501) up to PN 16
- ASME B 16.5 up to Class 150
- JIS B2220 up to 10 K
- DIN ISO 228 (G" external thread) up to PN 16
- ANSI/ASME B 1.20 (NPT" external thread) up to Class 150

Conductivity

The minimum conductivity is ≥ 50 µS/cm

Note!
In the remote version, the necessary minimum conductivity also depends on the length of the connecting cable (→ 📖 10, section "Length of connecting cable").

Pressure-temperature ratings

Permitted process pressure

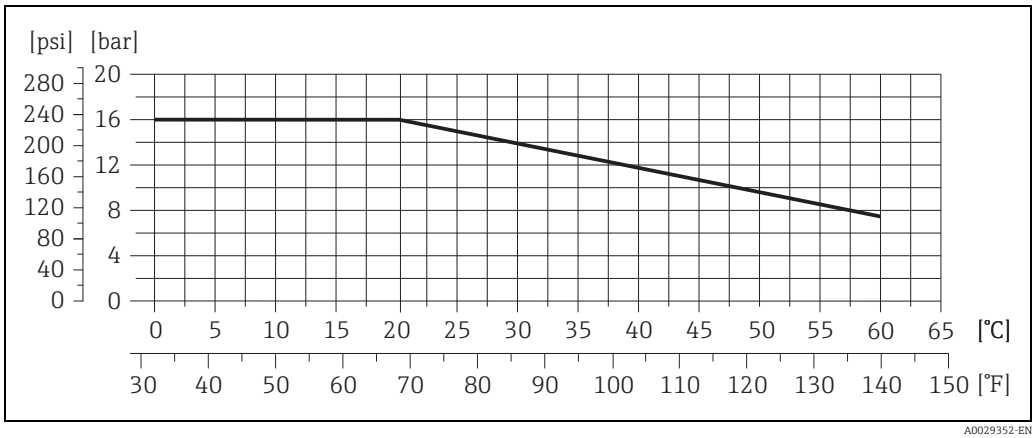

A0029352-EN

Pressure tightness

Measuring tube: 0 mbar abs (0 psi abs) with a fluid temperature of ≤ 60 °C (140 °F)

Limiting flow

The diameter of the pipe and the flow rate determine the nominal diameter of the sensor.
The optimum flow velocity is between 2 to 3 m/s (6,56 to 9,84 ft/s). The velocity of flow (v), moreover, has to be matched to the physical properties of the fluid:

- v < 2 m/s (6,56 ft/s): for abrasive fluids such as potter's clay, lime milk, ore slurry etc.
- v > 2 m/s (6,56 ft/s): for fluids causing build-up such as wastewater sludges etc.

For an overview of the measuring range full scale values, see the "Measuring range" section → 📖 4.

Pressure loss

- No pressure loss if the sensor is installed in a pipe with the same nominal diameter.
- Pressure losses for configurations incorporating adapters according to DIN EN 545 (→ 📖 12, section "Adapters")

Vibrations

Secure the piping and the sensor if vibration is severe.

Caution!
If vibrations are too severe, we recommend the sensor and transmitter be mounted separately. Information on the permitted shock and vibration resistance → 14, section "Shock and vibration resistance".

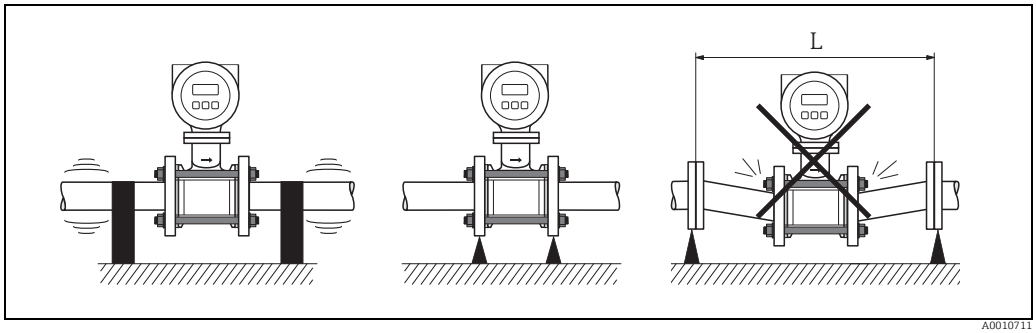

Measures to prevent vibration of the measuring device

L > 10 m (32.8 ft)

Mechanical construction

Design, dimensions

Compact version Promag D as wafer version

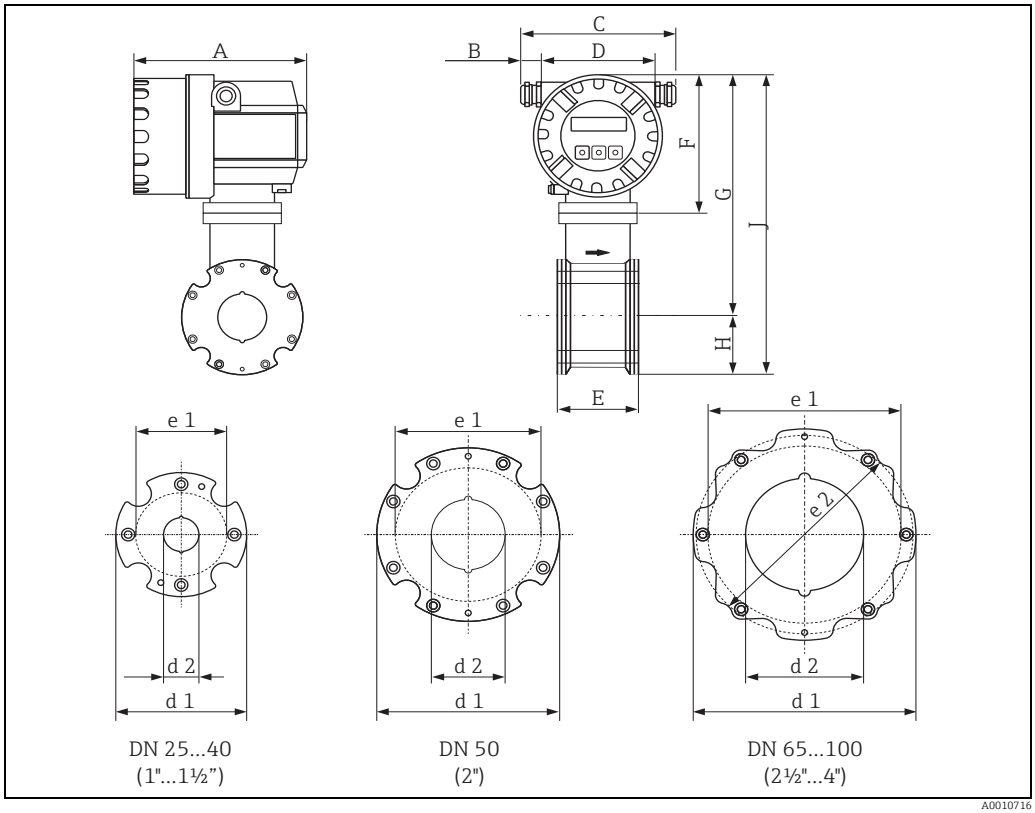

Engineering unit mm (in)

Dimensions (SI units)

DN EN (DIN) / JIS	A	B	C	D	E	F	G	H	J	d 1	d 2	e 1 max. Ø seals
25	178	20 to 27.5	153 to 168	113	55	150	240	43	283	86	24	68
40					69		251	52	303	104	38	87
50					83		262	62	324	124	50	106
65					93		272	70	342	139	60	125
80					117		276	75	351	151	76	135
100					148		290	89	379	179	97	160

All dimensions in [mm]

Dimensions (US units)

DN ANSI	A	B	C	D	E	F	G	H	J	d 1	d 2	e 1	e 2
												max. Ø seals	
1"	7.00	0.79 to 1.08	6.02 to 6.61	4.45	2.17	5.90	9.45	1.69	11.1	3.39	0.94	2.68	–
1 ½"					2.72		9.88	2.05	11.9	4.11	1.50	3.43	–
2"					3.27		10.3	2.44	12.8	4.88	1.97	4.17	–
3"					4.61		10.9	2.95	13.8	5.94	2.99	–	5.43
4"					5.83		11.4	3.50	14.9	7.05	3.82	6.30	–

All dimensions in [inch]

Compact version Promag D with threaded connection

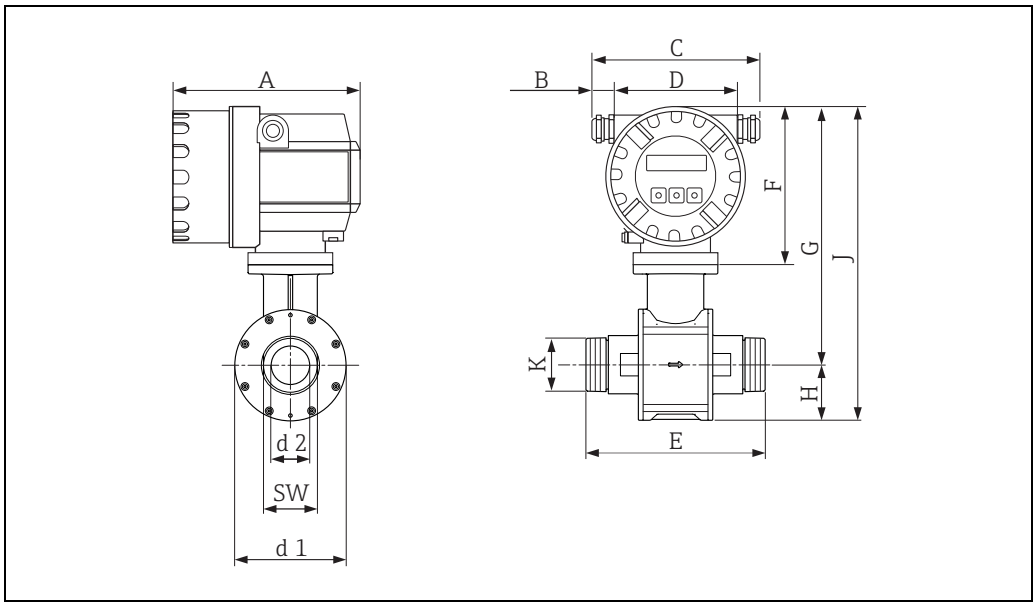

A0029291

Dimensions (SI units)

DN EN (DIN)	A	B	C	D	E	F	G	H	J	d 1	d 2	SW1)	K
25	178	20 to 27,5	153 to 168	113	110	150	240	43	283	86	22	28	G1"
40					140		251	52	303	104	34.4	50	G1 ½"
50					200		262	62	324	124	43	60	G2"

[1] SW = Width across flats (AF)
All dimensions in [mm]

Dimensions (US units)

DN ANSI	A	B	C	D	E	F	G	H	J	d 1	d 2	SW1)	K
1"	7	0.79 to 1.08	6.02 to 6.61	4.45	4.33	5.9	9.45	1.69	11.1	3.39	0.87	1.1	NPT1"
1½ "					5.51		9.88	2.05	11.9	4.11	1.35	1.97	NPT 1½"
2"					7.87		10.3	2.44	12.8	4.88	1.69	2.36	NPT2"

[1] SW = Width across flats (AF)
All dimensions in [inch]

Transmitter remote version

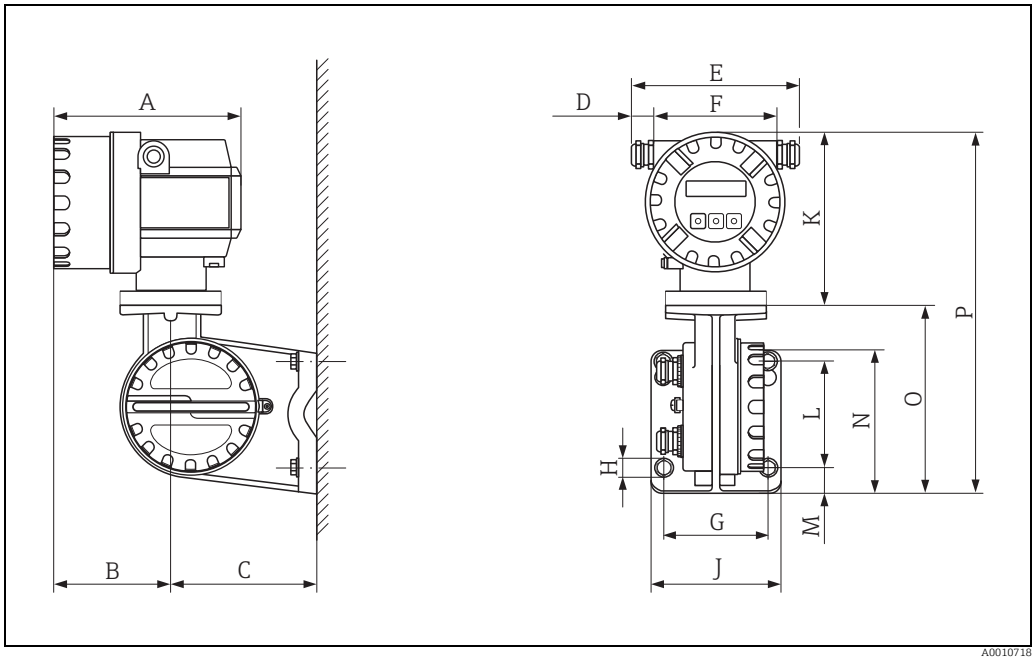

Transmitter dimensions, remote version

Dimensions (SI units)

A	B	C	D	E	F	G	Ø H
178	113	135	20 to 27.5	153 to 168	113	100	8.6 (ISO-M8)
J	K	L	M	N	O	P	
123	150	100	25	133	177.5	327.5	

All dimensions in [mm]

Dimensions (US units)

A	B	C	D	E	F	G	Ø H
7.00	14.5	5.31	0.79 to 1.08	6.02 to 6.61	4.45	3.94	0.34 (ISO-M8)
J	K	L	M	N	O	P	
4.84	5.90	3.94	0.98	5.24	6.99	12.9	

All dimensions in [inch]

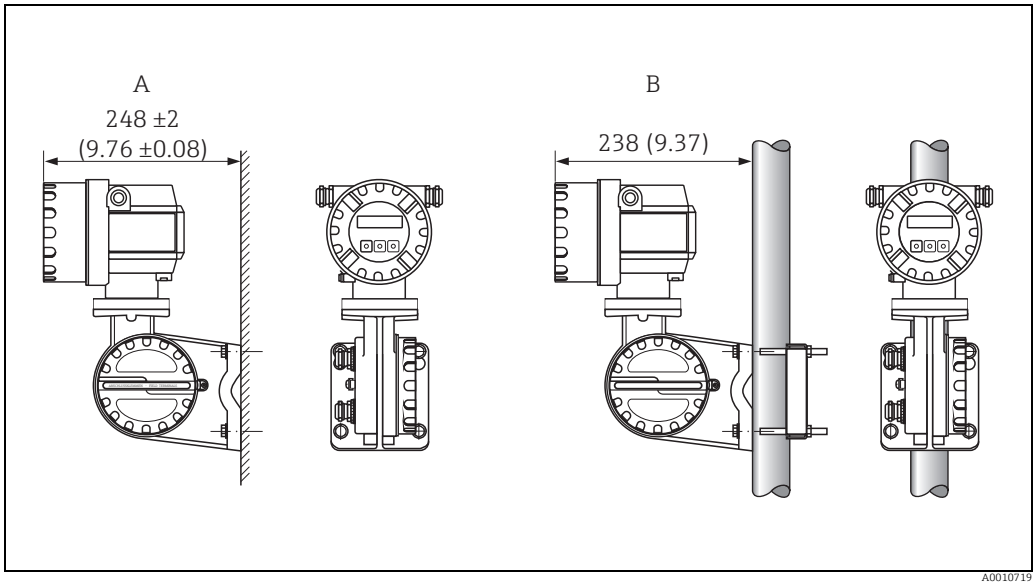

Transmitter mounting, remote version. Engineering unit mm (in)

A Direct wall mounting
B Pipe mounting

Sensor remote version Promag D as wafer version

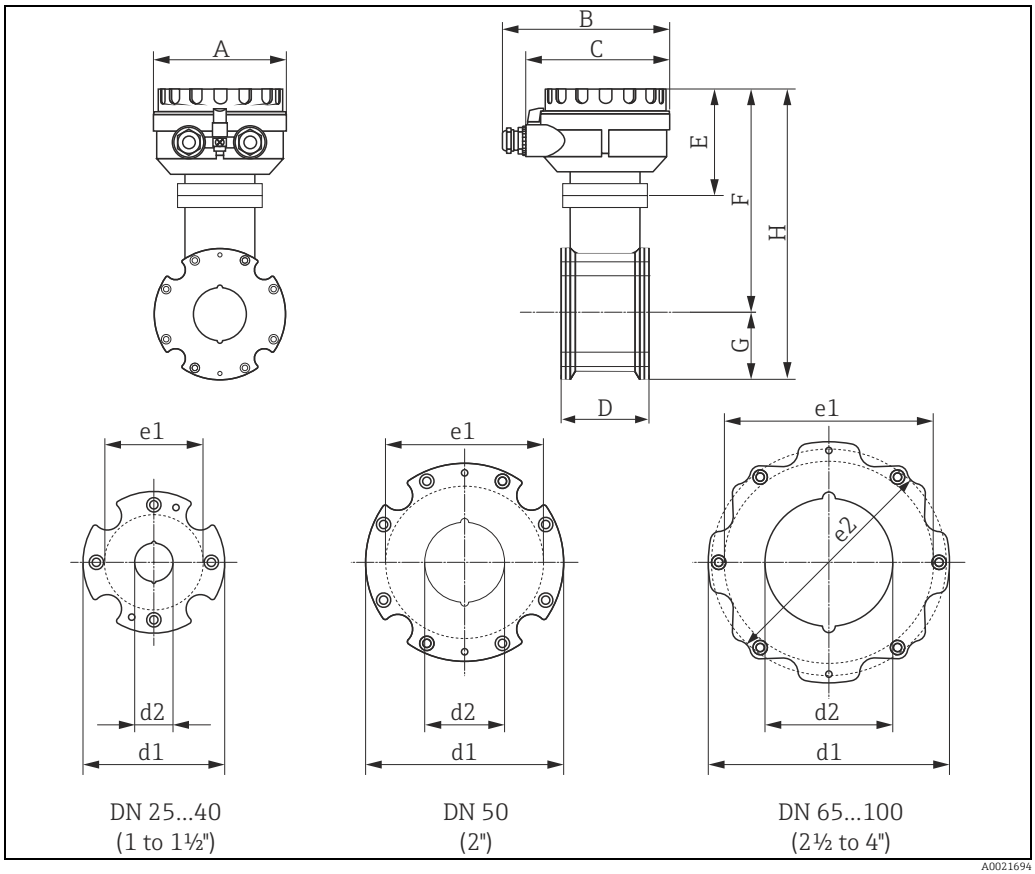

Engineering unit mm (in)

Dimensions (SI units)

DN EN (DIN) / JIS	A	B	C	D	E	F	G	H	d 1	d 2	e 1 max. Ø seals
25	129	163	143	55	102	192	43	235	86	24	68
40				69		203	52	255	104	38	87
50				83		214	62	276	124	50	106
65				93		224	70	294	139	60	125
80				117		228	75	303	151	76	135
100				148		242	89	331	179	97	160

All dimensions in [mm]

Dimensions (US units)

DN ANSI	A	B	C	D	E	F	G	H	d 1	d 2	e 1 max. Ø seals	e 2
1"	5.08	6.42	5.63	2.17	4.02	7.56	1.69	9.25	3.39	0.94	2.68	–
1 ½"				2.72		7.99	2.05	10.0	4.11	1.50	3.43	–
2"				3.27		8.43	2.44	10.9	4.88	1.97	4.17	–
3"				4.61		8.98	2.95	11.9	5.94	2.99	–	5.43
4"				5.83		9.53	3.50	13.0	7.05	3.82	6.30	–

Alle dimensions in [inch]

Sensor remote version Promag D with threaded connection

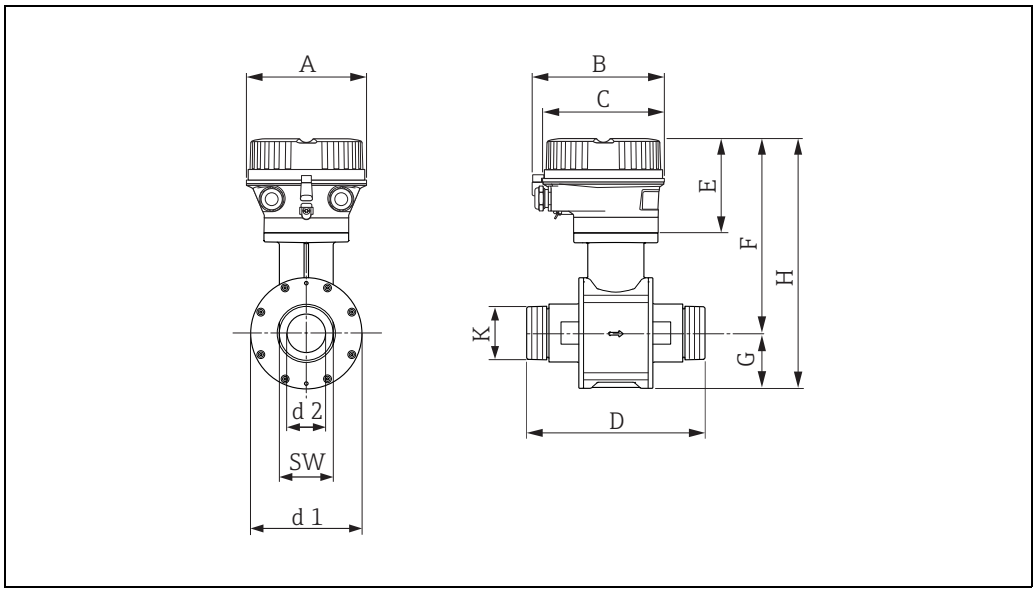

A0029292

Dimensions (SI units)

DN EN (DIN)	A	B	C	D	E	F	G	H	d 1	d 2	SW1)	K
25	129	163	143	110	102	192	43	235	86	22	28	G1"
40				140		203	52	255	104	34,4	50	G1 ½"
50				200		214	62	276	124	43	60	G2"

1) SW = Width across flats (AF)
All dimensions in [mm]

Dimensions (US units)

DN ANSI	A	B	C	D	E	F	G	H	d 1	d 2	SW1)	K
1"	5.08	6.42	5.63	4.33	4.02	7.56	1.69	9.25	3.39	0.87	1.1	NPT1"
1 ½"				5.51		7.99	2.05	10.0	4.11	1.35	1.97	NPT1 ½"
2"				7.87		8.43	2.44	10.9	4.88	1.69	2.36	NPT2"

1) SW = Width across flats (AF)
All dimensions in [inch]

Weight

Weight data without packaging material.

Diameter		Compact version						Remote version (without cable)			
		Total		Sensor		Transmitter		Sensor		Transmitter (field housing)	
[inch]	[mm]	[lbs]	[kg]	[lbs]	[kg]	[lbs]	[kg]	[lbs]	[kg]	[lbs]	[kg]
1"	25	6.4	2.9	2.4	1.1	4.0	1.8	5.5	2.5	6.8	3.1
1 ½"	40	7.7	3.5	3.7	1.7	4.0	1.8	6.8	3.1	6.8	3.1
2"	50	9.5	4.3	5.5	2.5	4.0	1.8	8.6	3.9	6.8	3.1
–	65	11.3	5.1	7.3	3.3	4.0	1.8	10.4	4.7	6.8	3.1
3"	80	13.5	6.1	9.5	4.3	4.0	1.8	12.6	5.7	6.8	3.1
4"	100	19.4	8.8	15.4	7.0	4.0	1.8	18.5	8.4	6.8	3.1

Measuring tube specifications

Pressure ratings Promag D as wafer version

Pressure rating EN (DIN)

Diameter		Pressure rating	Mounting bolts			Centering sleeves length		Measuring tube internal diameter	
[inch]	[mm]			[inch]	[mm]	[inch]	[mm]	[inch]	[mm]
1"	25	EN (DIN) PN16	4 × M12 ×	5.71"	145	2.13"	54	0.94"	24
1 ½"	40		4 × M16 ×	6.69"	170	2.68"	68	1.50"	38
2"	50		4 × M16 ×	7.28"	185	3.23"	82	1.97"	50
–	65[2]		4 × M16 ×	7.87"	200	3.62"	92	2.36"	60
–	65[2]		8 × M16 ×	7.87"	200	– *	– *	2.36"	60
3"	80		8 × M16 ×	8.86"	225	4.57"	116	2.99"	76
4"	100		8 × M16 ×	10.24"	260	5.79"	147	3.82"	97

[≠] EN (DIN) flange: 4-hole → with centering sleeves
[2] EN (DIN) flange: 8-hole → without centering sleeves
* A centering sleeve is not required. The device is centered directly via the sensor housing.

Pressure rating JIS

Diameter		Pressure rating	Mounting bolts			Centering sleeves length		Measuring tube internal diameter	
[inch]	[mm]			[inch]	[mm]	[inch]	[mm]	[inch]	[mm]
1"	25	JIS 10 K	4 × M16 ×	6.69"	170	2.13"	54	0.94"	24
1 ½"	40		4 × M16 ×	6.69"	170	2.68"	68	1.50"	38
2"	50		4 × M16 ×	7.28"	185	– *	– *	1.97"	50
–	65		4 × M16 ×	7.87"	200	– *	– *	2.36"	60
3"	80		8 × M16 ×	8.86"	225	– *	– *	2.99"	76
4"	100		8 × M16 ×	10.24"	260	– *	– *	3.82"	97

* A centering sleeve is not required. The device is centered directly via the sensor housing.

Pressure rating ANSI

Diameter		Pressure rating	Mounting bolts			Centering sleeves length		Measuring tube internal diameter	
[inch]	[mm]			[inch]	[mm]	[inch]	[mm]	[inch]	[mm]
1"	25	ANSI Class 150	4 × UNC ½ " ×	5.70"	145	– *		0.94"	24
1 ½"	40		4 × UNC ½ " ×	6.50"	165	– *		1.50"	38
2"	50		4 × UNC 5/8" ×	7.50"	190.5	– *		1.97"	50
3"	80		4 × UNC 5/8" ×	9.25"	235	– *		2.99"	76
4"	100		8 × UNC 5/8" ×	10.4"	264	5.79"	147	3.82"	97
* A centering sleeve is not required. The device is centered directly via the sensor housing.									

Pressure ratings Promag D with threaded connection

Pressure rating EN (DIN)

Diameter		Pressure rating	Threaded connection	Wrench size SW		Measuring tube internal diameter	
[mm]	[inch]			[mm]	[inch]	[mm]	[inch]
25	1"	EN (DIN) PN16	G 1"	28	1.1	24	0.94"
40	1 ½"		G 1 ½"	50	1.97	38	1.50"
50	2"		G 2"	60	2.36	50	1.97"

Pressure rating ANSI

Diameter		Pressure rating	Threaded connection	Wrench size SW		Measuring tube internal diameter	
[mm]	[inch]			[mm]	[inch]	[mm]	[inch]
25	1"	ANSI Class 150	NPT 1"	28	1.1	24	0.94"
40	1 ½"		NPT 1 ½"	50	1.97	38	1.50"
50	2"		NPT 2"	60	2.36	50	1.97"

Material

- Sensor housing: powder-coated die-cast aluminum
- Transmitter housing: powder-coated die-cast aluminum
- Measuring tube: polyamide, O-rings: EPDM
  (Drinking water approvals: WRAS BS 6920, ACS, NSF 61, KTW/W270)
- Electrodes: 1.4435 (316L)
- Ground disks Promag D as wafer version: 1.4301 (304)
- Ground disks Promag D with threaded connection: 1.4301 (304)

Mounting bolts

Tensile strength

- Galvanized steel mounting bolts: strength category 5.6 or 5.8
- Stainless steel mounting bolts: strength category A 2 – 70

Fitted electrodes

Measuring electrodes (2 pieces) made of 1.4435 (316L)

Process connections

Promag D as wafer version

The wafer version is compatible with the following process connections:
- EN 1092-1 (DIN 2501)
- ASME B16.5
- JIS B2220

Promag D with threaded connection

- DIN ISO 228, G" external thread
- ANSI/ASME B1.20, NPT" external thread

Operability

Local operation

Display elements

- Liquid crystal display: unilluminated, two-line, 16 characters per line
- Display (operating mode) preconfigured: volume flow and totalizer status
- 1 totalizer

Operating elements

Local operation via three keys

Remote operation

Operation via HART protocol and FieldCare

Certificates and approvals

CE approval

The measuring system is in conformity with the statutory requirements of the EC Directives. Endress+Hauser confirms successful testing of the device by affixing to it the CE mark.

C-tick symbol

The measuring system meets the EMC requirements of the "Australian Communications and Media Authority (ACMA)".

Ex approval

Information about currently available Ex versions (ATEX, FM, CSA, IECEx, NEPSI etc.) can be supplied by your Endress+Hauser Sales Center on request. All explosion protection data are given in a separate documentation which is available upon request.

Drinking water approval

- WRAS BS 6920
- ACS
- NSF 61
- KTW/W270

Other standards and guidelines

- EN 60529
  Degrees of protection by housing (IP code)
- EN 61010-1
  Safety requirements for electrical equipment for measurement, control and laboratory use
- IEC/EN 61326
  "Emission in accordance with requirements for Class A".
  Electromagnetic compatibility (EMC requirements)
- ANSI/ISA-S82.01
  Safety Standard for Electrical and Electronic Test, Measuring, Controlling and related Equipment - General Requirements. Pollution degree 2, Installation Category II.
- CAN/CSA-C22.2 No. 1010.1-92
  Safety requirements for Electrical Equipment for Measurement and Control and Laboratory Use. Pollution degree 2, Installation Category II

- NAMUR NE 21
  Electromagnetic compatibility (EMC) of industrial process and laboratory control equipment.
- NAMUR NE 43
  Standardization of the signal level for the breakdown information of digital transmitters with analog output signal.

Ordering information

Detailed ordering information is available from the following sources:
- In the Product Configurator on the Endress+Hauser website: www.endress.com → Select country → Instruments → Select device → Product page function: Configure this product
- From your Endress+Hauser Sales Center: www.endress.com/worldwide

Note!
Product Configurator - the tool for individual product configuration
- Up-to-the-minute configuration data
- Depending on the device: Direct input of measuring point-specific information such as measuring range or operating language
- Automatic verification of exclusion criteria
- Automatic creation of the order code and its breakdown in PDF or Excel output format
- Ability to order directly in the Endress+Hauser Online Shop

Accessories

Various accessories, which can be ordered separately from Endress+Hauser, are available for the transmitter and the sensor. Your Endress+Hauser service organization can provide detailed information on the specific order codes on request.

Device-specific accessories

Accessory	Description
Proline Promag 10 transmitter	Transmitter for replacement or storage. Use the order code to define the following specifications: ▪ Approvals ▪ Degree of protection/version ▪ Cable for remote version ▪ Cable entry ▪ Display/power supply/operation ▪ Software ▪ Outputs/inputs

Measuring principle-specific accessories

Accessory	Description
Mounting kit for Promag D as wafer version	Consisting of: ▪ Mounting bolts ▪ Nuts incl. washers ▪ Flange seals ▪ Centering sleeves (if required for the flange)
Seal set for Promag D as wafer version	Consisting of two flange seals.
Mounting set for remote version, aluminum field housing	Mounting kit suitable for pipe and wall mounting.
Cable for remote version	Coil and signal cables, different lengths available
Process display RIA45	Multifunctional 1-channel display unit: ▪ Universal input ▪ Transmitter power supply ▪ Limit relay ▪ Analog output

Accessory	Description
Process display RIA251	Digital display device for looping into the 4 to 20 mA current loop.
Field display unit RIA16	Digital field display device for looping into the 4 to 20 mA current loop.
Memograph M graphic display recorder	The Memograph M graphic display recorder provides information on all the relevant process variables. Measured values are recorded correctly, limit values are monitored and measuring points analyzed. The data are stored in the 256 MB internal memory and also on a DSD card or USB stick. Memograph M boasts a modular design, intuitive operation and a comprehensive security concept. The ReadWin® 2000 PC software is part of the standard package and is used for configuring, visualizing and archiving the data captured. The mathematics channels which are optionally available enable continuous monitoring of specific power consumption, boiler efficiency and other parameters which are important for efficient energy management.
Application Manager RMM621	Electronic recording, display, balancing, control, saving and event and alarm monitoring of analog and digital input signals. Values and conditions determined are output by means of analog and digital output signals. Remote transmission of alarms, input values and calculated values using a PSTN or GSM modem.

Communication-specific accessories

Accessory	Description
HART Communicator Field Xpert handheld terminal	Handheld terminal for remote configuration and for obtaining measured values via the HART current output (4 to 20 mA) and FOUNDATION Fieldbus. Contact your Endress+Hauser representative for more information.
Fieldgate FXA320	Gateway for remote interrogation of HART sensors and actuators via Web browser: ▪ 2-channel analog input (4 to 20 mA) ▪ 4 binary inputs with event counter function and frequency measurement ▪ Communication via modem, Ethernet or GSM ▪ Visualization via Internet/Intranet in Web browser and/or WAP cellular phone ▪ Limit value monitoring with alarm by e-mail or SMS ▪ Synchronized time stamping of all measured values.
Fieldgate FXA520	Gateway for remote interrogation of HART sensors and actuators via Web browser: ▪ Web server for remote monitoring of up to 30 measuring points ▪ Intrinsically safe version [EEx ia]IIC for applications in hazardous areas ▪ Communication via modem, Ethernet or GSM ▪ Visualization via Internet/Intranet in Web browser and/or WAP cellular phone ▪ Limit value monitoring with alarm by e-mail or SMS ▪ Synchronized time stamping of all measured values ▪ Remote diagnosis and remote configuration of connected HART devices

Service-specific accessories

Accessory	Description
Applicator	Software for selecting and planning flowmeters. The Applicator software can be downloaded from the Internet or ordered on CD-ROM for installation on a local PC. Contact your Endress+Hauser representative for more information.
Fieldcheck	Tester/simulator for testing flowmeters in the field. When used in conjunction with the "FieldCare" software package, test results can be imported into a database, printed out and used for official certification. Contact your Endress+Hauser representative for more information.
FieldCare	FieldCare is Endress+Hauser's FDT-based asset management tool. It can configure all intelligent field units in your system and helps you manage them. By using status information, it is also a simple but effective way of checking their status and condition.
FXA193	Service interface from the device to the PC for operation via FieldCare.

Documentation

- Flow measuring technology (FA005D/06/EN)
- Operating Instructions Promag 10 (BA00082D/06/EN)

Registered trademarks

HART®
Registered trademark of the HART Communication Foundation, Austin, USA

Applicator®, FieldCare®, Fieldcheck®
Registered or registration-pending trademarks of the Endress+Hauser Group

www.addresses.endress.com

Endress+Hauser

People for Process Automation

EDI – BUBBLE DIFFUSERS

Installation, Operation, & Maintenance Manual

EDI Floating Lateral Aeration/Mixing System

featuring

Suspended FlexAir Magnum Diffusers

EDI – Worldwide Headquarters
5601 Paris Road ● Columbia, MO 65202 USA
+1 (573)-474-9456 ● www.environmentaldynamics.com

Notice

This document and all information contained within is the property of Environmental Dynamics International. This document is submitted under a confidential relationship specifically for the recipient's use on a designated project. Reproduction of this document or use of its contents in whole or in part without the written permission of EDI is prohibited.

Table of Contents

EDI Aeration Instructions **3**

Storage Instructions *3*

Receiving Inspection 3

Pre-Installation Storage Requirements for Plastic Piping 3

Pre-Installation Storage Requirements for a Flexible Membrane System 3

Post-Installation Storage Requirements for a Flexible Membrane System 3

Installation Instructions *5*

Air Piping Installation 5

Polyethylene Fusion Welding 5

Pipe Tethering Instructions for Floating Air Laterals 6

Optional Water Flush and Air Purge Cleaning of Piping 6

Assembly Instructions for Suspended Diffuser Units 7

Connection of Retrieval Ropes and Snaps 8

Airline Installation for Suspended Diffuser Units 9

Leveling of Diffuser Units 10

Installation of Diffuser Assemblies 10

Start-Up Instructions *11*

General Aeration/Mixing Systems Start-Up Instructions 11

General Air Piping Inspection 11

Blower Components 11

Initial System Start-Up 11

Active Aeration Inspection 12

Safety Considerations *13*

Personal Protection Measures 13

Personal Protective Equipment 14

Confined Space Hazard 14

Operation Instructions *15*

Description of the Aeration-Mixing System 15

Normal Operation of the Aeration System 15

Normal Operation of the Blower System 15

Shutdown Conditions 15

Operation of the Diffuser Unit 16

Preventive Maintenance *17*

Maintenance Schedule 17

FlexAir Aeration System Inspection 17

In Situ Cleaning of Membrane 17

Membrane Protection 18

Corrective Maintenance *19*

Replacing FlexAir Diffuser Membranes 19

Troubleshooting 19

Replacing Suspended Diffuser Assembly 20

Removal of Suspended Diffuser - Repair Work Performed Off Site 20

EDI Services **22**

Aeration Works *22*

Service Department *23*

Diffuser Express *24*

PRODUCT SPECIFICATION SHEET

EDI Floating Lateral

Lagoon Aeration System

Unique System Configuration when System Installation and Maintenance Flexibility Required

- Air piping floats on water surface
- Accommodates variable water level applications
- High density polyethylene pipe for maximum durability
- Heavy wall piping and all welded construction including inline and branch transitions for maximum mechanical integrity
- Available with suspended diffuser assemblies for uneven floor or lined basin applications, and floor mounted diffuser assemblies for concrete and steel tanks and earthen basins with a level floor
- Multiple diffuser options including coarse bubble for low maintenance, and membrane, fine bubble, tube and panel diffusers for energy efficiency
- Field proven mechanical design with installations up to 400 m in length
- Diffuser assemblies are retrievable without taking basin off-line for maximum process reliability

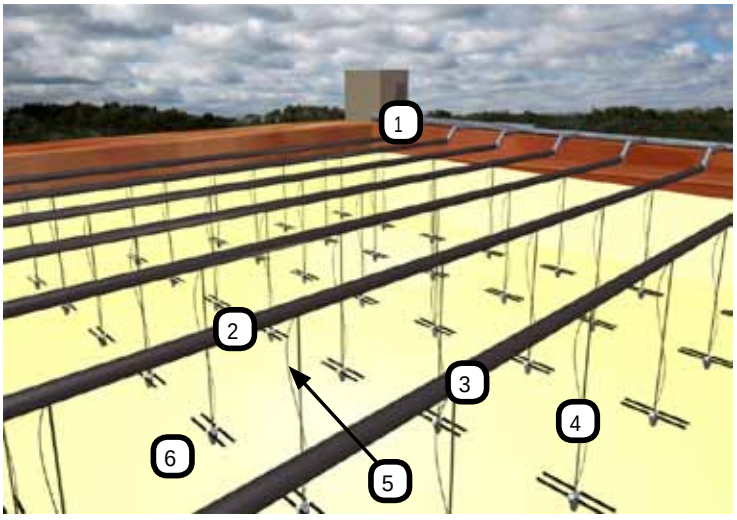

1. Flexible Inlet Connection
2. Floating Polythylene Pipe
3. Welded Airline Connection
4. Flexible Diffuser Airline
5. Retrieval Harness
6. Diffuser Assembly

PRODUCT SPECIFICATION SHEET

EDI Floating Lateral Aeration System is an unique solution when maximum installation flexibility and maintenance is required.

The system is ideally suited for applications where the basin cannot be taken off-line for either installation or maintenance. The system floats on the water surface. Individual diffuser assemblies are fully accessible from the water surface allowing maintenance to be completed without draining the basin or interrupting the process. Suspended diffuser assemblies are available when uneven floor elevations exist or when the basin construction will not accommodate or support the diffuser assembly. Ballasted diffuser assemblies that rest on the basin floor are available for basins with level earthen, concrete or steel floors.

The EDI floating lateral aeration system is designed to withstand significant external forces from wind, heat, ice, and varying water level conditions. Each component and total integrated system is engineered for maximum system integrity and field reliability. Heavy wall, high density, polyethylene pipe and welded construction are standard for all connections. Inline and optional cross restraint cables are used to maintain the position of the components.

The mechanical design of the EDI floating lateral aeration system performance of the system has been field demonstrated. EDI has the world's largest floating lateral aeration system. This system employs laterals approaching 400 m in length and has withstood high wind conditions (greater than 100 km per hour) without mechanical damage.

The floating lateral aeration system is available with the FlexAir® diffuser for energy efficiency and low maintenance. A coarse bubble diffuser option is also available when energy efficiency is not a significant concern.

For additional information on the EDI Floating Lateral Aeration System or any EDI products, contact EDI, visit our website at www.wastewater.com or contact a local EDI representative.

Environmental Dynamics International
5601 Paris Road • Columbia, MO 65202 USA
+1 877.EDI.AIR8 (334.2478) +1 573.474.9456

For Parts Information:
parts@wastewater.com
www.diffuserexpress.com

For System Information:
systems@wastewater.com
www.wastewater.com

Storage Instructions

Receiving Inspection

R.2014-12-26

(FOB EDI only)
Shipments shall be inspected for damage upon receipt. The recipient/receiver is responsible for all damages. EDI offers to act on behalf of the recipient / receiver in filing a claim for damage incurred during shipment. To file a claim against the freight company, a damage report must be submitted to EDI within 24 hours of delivery.

(FOB Jobsite only)
Shipments shall be inspected for damage upon receipt. Any damages observed upon receipt must be noted with the freight company at the time of delivery and reported to EDI within 24 hours of delivery. EDI will repair or replace damaged goods when notified within this notification period.

(Ex-Works only)
Shipments shall be inspected for damage upon receipt. The recipient/receiver is responsible for all damages. To file a claim against the freight company, file a damage report directly with the shipping company.

Note

A full inventory of shipped components shall be completed within 14 days of the receipt of shipment. Any deficiencies in the shipment that are clearly deemed to be the result of EDI will be reconciled by EDI when notified within this time period.

Pre-Installation Storage Requirements for Plastic Piping

r.2013-02-18

PE piping components may be stored outdoors provided the ambient air temperature is below 140°F (60°C).

Pipe sections are furnished with end caps to minimize the entry of foreign materials (dirt, debris, etc.) into the pipe. Any foreign materials that are allowed to contaminate the pipe will need to be removed from the system prior to installation and start-up.

Piping shall be stored on a flat surface to avoid damaging the pipe sections.

Accessories such as pipe supports, fasteners, etc., packaged in original boxes are to be protected from excessive moisture and rain. Outdoor storage is acceptable provided the ambient air temperature is below 140°F (60°C).

Small items should be stored in a secure location to avoid misplacement and theft.

Pre-Installation Storage Requirements for a Flexible Membrane System

r.2011-10-12

Diffuser components packaged in original crates and/or cardboard boxes may be stored outdoors provided the ambient air temperature is below 100°F (40°C). In the case of components that are received in cardboard packaging, these packages must be protected against excessive moisture and rain to maintain package integrity.

If the ambient air temperature exceeds 100°F (40°C), then containers shall be shaded or stored indoors in which the ambient air temperature does not exceed 125°F (52°C).

Storage of diffuser membrane components shall be limited to one year.

Post-Installation Storage Requirements for a Flexible Membrane System

r.2011-10-12

When the reactor is drained and the aeration system is exposed for a short period of time (less than 6 weeks), the system shall be protected from foreign objects including but not limited to paint or weld splatter, falling objects, etc.

- If the ambient air temperature is above 100°F (40°C), the system should be shaded to protect the system from UV light and excessive heat. A gray fabric tarp is recommended to shade the aeration components. The gray fabric tarp is to be

suspended above the aeration system by approximately 6" (150 mm) to prevent damage to the system.

- **Note: Do not use any form of plastic to cover the aeration components. Plastic can create a hotter environment and/or fuse to the surface of the diffusers.**

When the aeration system is to be idle for an extended period time (greater than 6 weeks), the system should be submerged in approximately 4 feet of clean water provided the ambient air temperature is greater than 32°F (0°C).

- If the ambient air temperature is below 32°F (0°C), the water level may need to be increased so that the ice layer does not contact the aeration system.
- When reactivating a system where ice exists, operate the system at a minimum airflow to avoid movement of ice and maintain this airflow condition until the ice is no longer present.
- The water level should never be lowered if ice is present. The weight of the ice may damage the system.

When the aeration system is to be idle for an extended period time (greater than 6 weeks) and the units are going to be removed and stored, then the following storage conditions would apply.

- If the ambient air temperature is going to be less than 100°F (40°C), then a fabric tarp is recommended to cover the equipment.
- If the ambient air temperature exceeds 100°F (40°C), then the equipment shall be shaded or stored indoors in which the ambient air temperature does not exceed 125°F (52°C).

Installation Instructions

Air Piping Installation

r.2013-10-25

The Contractor is to confirm that the air piping is clean during fabrication of laterals and should swab out any debris found in the pipe **before** installing the diffuser units. Dirt and debris may clog the diffuser unit requiring an extended start-up procedure and **MAY** require the Contractor to remove and replace diffuser unit at Contractor's expense. If piping requires further cleaning before diffuser installation, Contractor may elect to perform water flush or air purge procedures described at the conclusion of this section.

EDI will supply full diameter PE tee assemblies with threaded outlets factory-welded to pipe sections. Contractor is to butt fusion weld lateral piping sections and tees to form lateral assembly. NOTE: EDI also supplies straight run lengths of PE piping that have no outlets. This pipe is to be used for "field fit" of lateral piping system to the geometry of the lagoon. Contractor is required to field-confirm the distance from stub lateral flange outlet to toe of slope, and using straight-run lengths, weld in (or cut out) a length of PE piping as required to maintain recommended distance from the first diffuser unit to the toe of the slope.

Care should be taken during welding procedures not to damage the outlet fittings. The outlet fittings must be oriented in the same direction for proper system operation. All PE pipe components are assembled by heat fusion welding. Typically, lateral components are butt-welded. Contact EDI if information is required regarding suppliers of fusion welding equipment.

PE piping is to be assembled on the basin bank and transported into the basin as a single unit or floated into the lagoon as sections are assembled. NOTE: Precautions should be taken during initial piping system installation to avoid the entry of process water into the interior of piping.

Polyethylene Fusion Welding

EDI high-efficiency aeration systems are designed to provide years of maintenance-free operation. A few simple quality control procedures employed during the installation of the aeration equipment system will help ensure the client a quality installation.

EDI recommends the Contractor be trained in fusion welding procedures prior to fusion welding of pipe. EDI recommends that training be provided by a representative of the fusion welding equipment supplier, EDI Field Service personnel, or personnel with certification in welding procedures. Industry accepted standards for fusion welding must be followed. Industry standards include preparation of pipe surface prior to fusion (cleaning, facing, alignment, etc.), heat temperatures and pressures, heat soak and cooling cycle times, allowing weld to fully cool prior to rough handling, and maintenance of fusion equipment. The Heat Fusion Welding Procedures contained in this manual discusses in detail the heat fusion process. Systems that utilize floating laterals will experience more thermal longitudinal expansion and contraction than submerged piping systems. Special care should not only be given to the fusion welding procedures for floating laterals, but the lateral restraint system as well.

Expansion and contraction of the polyethylene pipe can place stress and strain on improperly fused joints, which could lead to joint failure. Historical data on aeration systems supplied by EDI show joint failure is a rare occurrence. When seen, joint failure has been traced to improper fusion welding procedures. Improper welding procedures include inadequate preparation of pipe, using the wrong temperatures or pressures and cycle times, and use of equipment that has not been maintained in adequate working condition. All equipment used for fusion welding should be inspected and maintained on a regular basis to assure good working order of equipment.

On installation instruction/inspection trips, EDI typically performs a visual inspection procedure of fusion welds. Welds are inspected for proper alignment of pipe, proper roll back, proper bead size, uniform bead size, etc. Welds not consistent with industry acceptable visual requirements will have to be cut out and re-welded. If there is any doubt as to the quality of

a weld, EDI recommends cutting the weld out and re-welding.

Contact the EDI Field Service Department at 573-474-9456 if there are any questions on fusion welding equipment, welding procedures, or for scheduling of instruction trips.

Pipe Tethering Instructions for Floating Air Laterals

r.2013-05-16

1) The tethering system for air lateral piping is designed to allow unrestrained longitudinal expansion/contraction of the lateral piping while limiting lateral sideways movement. The terminal end of the air laterals is secured to lateral tensioning devices/deadman anchors using the restraint strap assembly and Double Braided Polyester rope. See the EDI aeration system layout drawing for detail drawings of the tethering components utilized on the lateral piping.
2) EDI provides Double Braided Polyester rope for connection to a circular anchor post on the berm. Design and supply of the anchor post is by others.
3) When installing the lateral piping system in a sequential manner (pulling successive sections of the welded lateral into the basin), the tethering hardware should be fastened to the terminal end of the lateral first. Then, fasten the rope to the rope-mounting bracket per EDI detail drawings. A length of rope is required to extend the Double Braided Polyester rope across the basin such that the lateral can be controlled during the installation procedure.
4) When entire lateral piping system is positioned in the lagoon, secure the PE flange connection to the main air header. NOTE: Lateral piping must be installed so as to maintain a vertically downward direction of the feeder airlines.
5) Remove temporary rope and secure Double Braided Polyester rope to the anchor post. The rope should be tight enough to restrict significant side to side movement of the lateral, but not tight enough to suspend any portion of the lateral out of the water. Note: In most cases, it will be impossible to keep the lateral from having some side to side movement.

Optional Water Flush and Air Purge Cleaning of Piping

r.2011-10-12

These instructions cover the general procedure that may be used to clean the piping in a fine or medium bubble diffuser system prior to diffuser installation. Special pipe cleaning requirements outlined in the Engineer's specifications, contract documents, or instructions offered by EDI shall be supplementary to or take precedence over the general instructions outlined below.

Water Flush Cleaning

1) Water flush cleaning is the recommended method to clean assembled piping systems where pipe segments are too long for manual cleaning. This procedure can be used in conjunction with air purge cleaning and is recommended when fine debris is not removed prior to assembly of piping. When both water flush and air purge are used, the water flush procedure should be implemented first.
2) To water-flush the system, connect a water supply to the air header or make individual connections to each lateral. If flush water is piped to the header, it is imperative that the header be valved or stubbed such that water does not flood the blowers.
3) Clean water must be used. It is not necessary to use potable water, but the flush water must be free of silt or debris.
4) Flush header assembly prior to water flushing the laterals. To flush the header, fill it with water and open the end lateral to create a flush velocity in the header of at least two feet per second.
5) Next, the laterals are to be individually flushed at a recommended velocity of five to six feet per second. Opening one isolation valve will produce a significant flushing action in the lateral as water is pumped through the header. One or two drilled air outlet holes should be uncapped to allow water and debris to be flushed out of the piping.

6) The cleaning procedure in the previous step should be completed for each of the laterals. This is done by sequentially opening and closing the isolation valves on the individual laterals.

7) As an alternative to using the main header/lateral flush procedure, the individual laterals may be cleaned independently of the main header. For this operation, the laterals are disconnected from the main header and cleaned individually.

Air Purge Cleaning

1) Remove weights and cap from the pressure relief valve during initial start-up of the system. This prevents potential damage to the blowers from blocked valves or obstructions in piping system. Cap and weights can be added back to the pressure relief valve as necessary to provide proper operating pressure capability.

2) NOTE: When a blow-off valve is provided for the blower system, it may be operated in lieu of using the pressure relief valve procedure listed above.

3) Open all lateral valves prior to start-up of the blowers. Provide an opening at the end of the air laterals to allow air and foreign materials to be discharged from the system. The opening may be made at the end of the air lateral by leaving the end cap off of the lateral or by removing two orifice/outlet plugs at the end of the lateral.

4) In order to increase the velocity of air through the header and air laterals, it may be desirable to operate at maximum blower capacity. In addition, it may be necessary to close some of the lateral throttling valves to achieve a high velocity through the balance of the laterals that are open to the atmosphere. A high velocity is required in order to blow out any accumulated foreign materials.

5) As laterals are consecutively cleaned, the isolation valves are operated in a manner that allows the remaining laterals to be cleaned by an air purge.

6) Upon completion of the air purge, the blowers are shut down and the laterals are capped. Diffuser units are installed on the laterals and all isolation valves are opened prior to filling the basin with water.

7) If only an air purge is used to clean the piping, the basins are now ready to be filled with water to check the operation of the diffuser units.

Assembly Instructions for Suspended Diffuser Units

R.2015-11-20

EDI supplies ballast form and frame (shown below). Contractor is to fill the ballast form with concrete and insert S.S. ballast frame. Ballast assemblies should be laid out in an area where units can remain without handling until required for installation in basins.

1) Fill the ballast form with minimum 130 lbs./cu.ft (2097 kg/cu.m.) density concrete (by others). The approximate amount of concrete required for each diffuser unit is shown in the table below.

Unit Type	Concrete required
42S	0.69 cu.ft. (0.019 cu.m.)
84S & 44S	0.97 cu.ft. (0.027 cu.m.)
88S	1.30 cu.ft. (0.037 cu.m.)

2) Strike off excess concrete to attain a level top surface of the ballast assembly. It is important that the concrete be relatively smooth and level with the top of the ballast form. This is to avoid difficulty in mounting the diffuser assembly and damage to the diffuser. There should be no contact

between the ballast assembly and diffuser membrane.

3) The S.S. ballast frame should be placed into the ballast form with the threaded portion of the frame extending above the top of the form and the horizontal braces are on the bottom half of the form. Ensure that the frame has reached the bottom of the pan. Check that the spacing between the threaded rods match up to the S.S. magnum pipe straps and did not get damaged during shipment or handling. If these do not line up, bend the frame to match the appropriate spacing.

4) The threaded rod protruding above the ballast form should be protected from concrete and contaminants. If necessary the threads should be "chased" after filling the form with concrete.

5) Allow concrete to cure 72 hours or per Engineer's specifications.

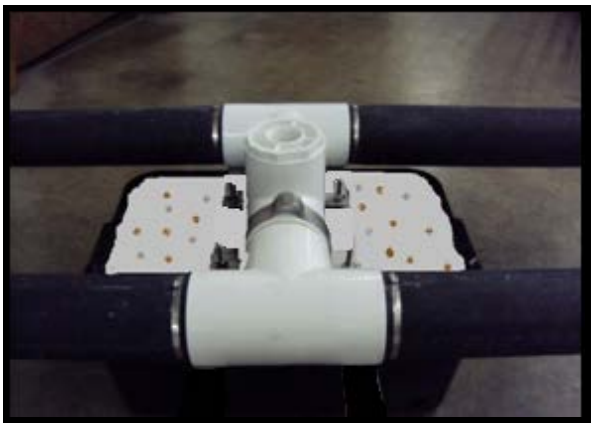

6) Secure diffuser to ballast bucket assembly with S.S. magnum pipe straps. These pipe straps have a smaller radius at their apex. This is for securing the retrieval ropes. Lock washers should be used in conjunction with the proper sized hex nuts to secure the pipe straps holding the diffuser unit to the ballast assembly. Tighten the pipe straps and unit assembly to 25 ft. lbs. (33.9 N-m).

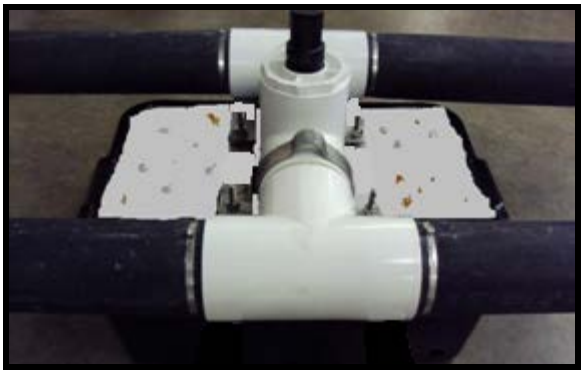

7) Thread the PVC orifice adapter into the top of diffuser assembly. Use Hercules Mega-Loc brand pipe dope on all threaded connections for lubricant and sealant (pipe dope containing PTFE is potentially damaging to plastic parts). The adapter should not be bottomed out when tight, as a rule of thumb, 2 to 3 threads should be showing. Over tightening may damage the adapter.

Connection of Retrieval Ropes and Snaps

1) Cut 7/16" (~11mm) polypropylene rope to length. Recommended rope length is the diffuser submergence plus 8 feet (2.4m). Use a hot knife to cut the rope. This procedure seals the cut end of the rope and prevents fraying and unwinding of rope strands.

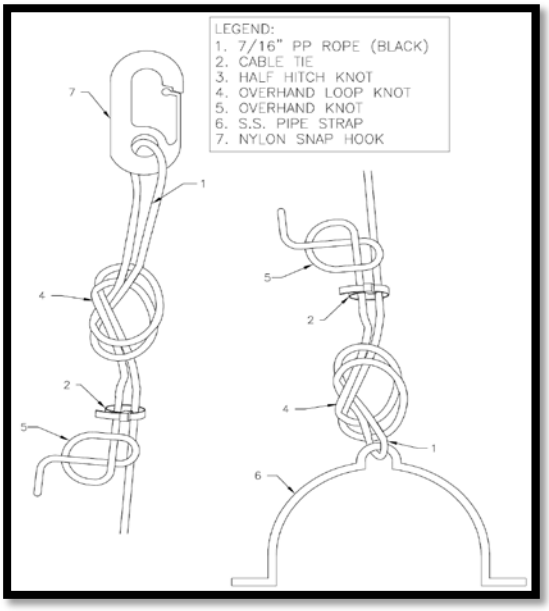

2) Slip one end of the rope through the eye of the rope snap. Secure to the lifting rope with two half-hitch knots, leaving approximately six (6) inches (152 mm) of free rope. Tie an

overhand knot in the loose end and secure a cable tie to the lifting rope between the knots. See above picture or layout drawing for the details of this procedure.

3) Loop the other end of the lifting rope through the eyelet on the central S.S. magnum strap, tie off the rope and secure with cable tie as described above. Loop rope around lateral piping at outlet and secure snap to rope. Unit must be suspended from the airline, not the retrieval rope.

Leveling of Diffusers

Air distribution through the aeration system is a function of the relative elevation of the individual aeration units and the leveling tolerance of the air supply piping. Excessive variation in pipe elevation (see Start-up Instructions) may result in poor air distribution during normal operation.

As a guideline, EDI recommends that aeration units be installed as level as practical, preferably no more than ±1.5°, and in any case no more than ±3°. See the following table for equivalent distances at the tip of the diffuser for these values:

Diffuser Type	Variation at Tip of Diffuser to equal 1.5°	Variation at Tip of Diffuser to equal 3°
Magnum (std. length)	±1.2”	±2.5”
MiniPanel (std. length)	±1.5”	±3”
9” Disc	±1/8”	±1/4”

Airline Installation for Suspended Diffuser Units

R.2015-01-02

Diffuser equipment should be assembled as much as possible on the bank before entering the water. After ballast components have been attached to diffuser assembly, attach airlines to diffuser units.

1) Airlines should be cut to the length specified on layout drawing. Insert airline over hose barbing on the diffuser assembly inlet and secure with hose clamps provided. One hose clamp should be installed over the barbs, the other clamp should be installed on the neck of the manifold inlet. The hose clamps should be offset by 180° to achieve maximum clamping force. A rubber lubricant or a 50% solution of Murphy’s™ soap and water may be applied to both the barbs and the inside diameter of the airline to aid in installation.

2) The female orifice adapter is to be threaded onto the PE threaded outlet.

Note

*Depending on the type of units and design, some female adapters may be fabricated with **different size orifices**. See headloss calculations or detail drawings to ensure which adapters are to be used with which units. Failing to do so will not allow proper air distribution once the system is in operation.*

3) Use Hercules Mega-Loc brand pipe dope on all threaded connections for lubricant and sealant (pipe dope containing PTFE is potentially damaging to plastic parts). The adapter should not be bottomed out when tight, as a rule of thumb, 2 to 3 threads should be showing. Over tightening may damage the adapter. Stainless steel set screws **MUST** be used to lock this fitting onto the lateral.

4) The airline should be inserted completely onto the female adapter. The overall length of the diffuser assembly from the lateral to the diffuser must be the same for all of the diffusers for proper operation. Attach the airline to the female adapter utilizing 2 hose clamps offset by 180°. See picture below or EDI installation drawings for detail of components.

Leveling of Diffuser Units

1) The level of the diffuser units directly impacts airflow distribution among diffuser units. The following guidelines are recommended to help insure all units are installed at consistent operating depths.
2) Cut the airlines to the lengths stated on EDI Layout Drawing.
3) Threaded components should be tightened to the same degree. NOTE: Over-tightening may strip threads.
4) The airline should be pushed onto the insert to the same degree at both ends of the assembly. EDI recommends inserting the airline onto fittings completely such that airline butts to shoulder of insert.

Installation of Diffuser Assemblies

1) The system is designed to have diffuser assemblies in a specific orientation relative to the lateral piping. See EDI layout drawing for the orientation to be used. The airline has lines of printed text on it, which may be used as a reference mark to help align the diffuser assemblies correctly.
2) EDI recommends that as the lateral is being floated out, the airline should be attached with the hose clamps and tied close to the lateral with the retrieval rope. After the lateral(s) is in final position, utilize a boat and release the diffuser assemblies, then reconnect the retrieval rope to the lateral using the rope snap.
3) Alternative 1: Diffuser assembly installation requires lifting the floating lateral piping to access the PE threaded outlet. EDI recommends using a winch fastened to the boat to aid in lifting the piping segment.
4) Alternative 2: A single boat may be used to lift the lateral. In this case, a pontoon outrigger may be desirable to stabilize the boat. However, as an alternative, two boats may be used: one boat to lift the lateral, and the second to attach the diffuser units.

Note

Properly installed diffusers are suspended by the feeder airline with slack in the retrieval rope.

Start-Up Instructions

General Aeration/Mixing Systems Start-Up Instructions

R.2015-11-20

These instructions cover the general start-up requirements for the aeration system. Special start-up requirements outlined in the Engineer's specifications, contract documents, or instructions offered by EDI shall be supplementary to or take precedence over these general instructions.

An overview of start-up procedures is listed below:

General Air Piping Inspection

1) Contractor is to confirm the cleanliness of the air piping. If existing header piping is used, the air purge or water flush cleaning procedure is recommended prior to installation of diffuser units to remove any internal debris that may have accumulated in the header piping. Inspect air piping and diffuser connections for loose fittings or damaged pipe. Damaged piping sections and connections should be repaired prior to commencing system operations.
2) Confirm that piping and diffusers are level by filling the basin with water until the diffusers are 1" to 2" under water. Diffuser elevation tolerance should be within the approved tolerance for the respective diffusers. Adjust supports as required to level the air supply piping (on which the diffusers are mounted) to within a tolerance of ±1/4”.

Blower Components

See the blower installation and start-up instructions to assure all blower components are mounted properly and ready for operation. When EDI provides the blower assemblies, detailed installation and start-up instructions are provided in the blower submittal package.

Blower components should be fully installed and fully serviced prior to making final electrical connections and starting up the aeration system.

Precautions should be taken throughout system installation to minimize the discharge of airborne particles to the aeration system. As a minimum, an air inlet filter should be installed and operated during blower servicing procedures. EDI recommends a filter efficiency of 93% of 10-microns. Any solvents used to clean blower should be bypassed from the aeration piping. The discharge of airborne particulate matter or solvent into aeration piping may result in damage to diffuser membranes.

Upon completion of blower manufacturer's recommended service, the subsequent start-up procedures may be followed.

Initial System Start-Up

To start the system, completely open all valves in the air supply system, including blower shut-off valves, header valves and lateral isolation/throttling valves. This instruction assumes that uniform water level is present in all aerated basins served by a common blower. If varying water levels are present, basins with lower water levels will need to have the valve to that basin throttled back to avoid improper air distribution. Failure to completely open all valves may result in over-pressuring blower unit, release of pressure relief valve, motor overload, or poor air distribution in aeration system with the potential of exceeding airflow capacity to diffuser units and damaging the diffuser membranes.

Once valve positions have been confirmed, blower unit may be started. EDI does not recommend starting multiple blower units at initial system start-up. Subsequent blowers should be brought on-line after the system has equalized and uniform diffuser activity is observed throughout the system.

Use blower manufacturer’s recommended start-up procedures. EDI recommends that initial pressure surge be reduced through PRV or blow-off valve.

Start-up procedures should follow the basic guidelines as listed below:

1) When starting initial blower, the PRV or blow-off valve should be used to reduce the start-up pressure surge. This is accomplished by removing weights and the cap from the PRV or by opening the blow-off valve.

2) When the basin has been filled, note the operating pressure at the blowers. The pressure relief valve should be adjusted to free-flow at approximately 1 psig above the normal operating pressure of the system.

3) To confirm the PRV operates, partially close blower shut-off valve until PRV releases air. Reopen the shut-off valve to confirm that PRV will reseat. If required, readjust the PRV to the recommended setting per instructions in the Blower IOM manual.

4) To properly assess the airflow distribution on the aeration system, the blower system must be operating at the design operating point. On dual blower systems, design airflow is typically achieved by operating one blower at 100%. On three-blower systems, design airflow is typically based on operating two blowers at 100%.

5) Airflow distribution adjustment between aeration grids should not be conducted until the full operating depth is obtained and the blower system has been in operation for several days. Small adjustments may be made to the isolation/throttling valves on the laterals receiving the most air. System balancing should be completed on an incremental basis. Changes in airflow distribution may require 2-8 hours to fully stabilize when fine-tuning a system. In addition, in situations where multiple basins are employed and varying water levels exist, adjustments of lateral valves will be required to maintain air distribution in the tanks.

EDI recommends that the system Operator contact EDI at 573-474-9456 prior to making any adjustments to the airflow distribution.

Active Aeration Inspection

1) With the blower system active, operate the aeration system at 50% design air capacity. At this setting, check piping and diffusers for obvious leaks, and repair as required. Open any manual purge valves to expel water that may be in the piping. Close the purge valves once all water has been expelled.

2) Check for minor leaks by completing the following steps. Turn the airflow down to very minimal release. If the system employs separate drop valves, each grid can be checked separately by throttling the valve one at a time. Again, take care not to exceed airflow capacities in neighboring aeration grids when reducing airflow by this method.

   The airflow will not be uniform at this low level. This is acceptable, as this test is only used to check for small leaks that are not visible with the design amount of airflow. Check for any observed leaks and repair as required.

   Leaks commonly occur due to:

   a. missing or misaligned o-ring

   b. torn membranes

   c. loose disc retainer ring

   Directions for fixing these items can be found in the “Corrective Maintenance” section of this manual.

   NOTE: Polyurethane membranes (if supplied) may exhibit small leaks at the ends of the membranes at initial start-up. This is normal and can be expected until the membranes are submerged for a period of time. These small leaks will stop once the membranes are wetted for a period of time, especially for polyurethane membranes (up to 2-4 weeks). This is also true for uniformity of ceramic media (if supplied).

   Reopen the valve as inspection is completed to each aeration grid, and repeat procedure for the next grid.

3) Once all deficiencies have been corrected, maintain air to the system and continue filling the basin until the design depth is reached.

Safety Considerations

Safety Considerations

r.2011-10-13

The diffused aeration system supplied on this project has no moving parts and poses little to no risk of injury to operations staff. However, routine maintenance may expose personnel to potential hazards. EDI has listed below potential hazards and recommended precautions when maintenance procedures are required for the aeration components.

Tanks at Full Liquid Depth

Hazards:

1) Turbulent liquid action.

Precautions:

1) Provide access to emergency throw rope or life ring.
2) Use "buddy system" during maintenance activities.

Tanks Empty

Hazards:

1) Falling into tank.
2) Objects falling onto maintenance personnel in the tank.
3) Slippery floor.

Precautions:

1) Avoid access ways without railings.
2) Provide emergency exit/access.
3) Appropriate personal safety equipment

Maintenance of Diffuser Units: Tanks Empty

Hazards:

1) Personnel falling into tank.
2) Objects falling in the tank.
3) Slippery basin floor.

Precautions:

1) Avoid access ways without railings.
2) Provide emergency exits/access.
3) Appropriate personal safety equipment.

Maintenance of Diffuser Units: Tanks Full

Hazards:

1) Dropping hardware
2) Personnel falling into tank.

Precautions:

1) Assure proper winch operation before securing cable to drop assembly.
2) Use buddy system and follow standard safety procedures.

Personal Protection Measures

Wastewater has a potential for health hazards because it may carry disease producing organisms and a variety of chemical wastes. It is important to employ good personal hygiene practices to prevent oral and skin contact with wastewater. The following is a list of methods to prevent direct contact entry of pathogenic organisms:

1) Wash hands frequently with soap and water after contacting wastewater, visiting restrooms, before eating, drinking, or smoking; and at the end of jobsite visit. When soap and water are not available use anti-bacterial hand wash specifically formulated for use when soap and water is not convenient.
2) Promptly treat cuts and abrasions using appropriate first aid measures.
3) Handle sharp items with extra care to prevent accidental injuries.
4) Clean contaminated tools after use.
5) Follow good common sense and exercise extra caution whenever there is contact with contaminated water or sludge.
6) Never touch face, mouth, eyes, ears, or nose while working with wastewater or sludge.

Personal Protective Equipment

1) Wear heavy-duty gloves (or double gloving) and boots that are waterproof and puncture resistant. Wear gloves whenever practical when there is contact with wastewater or sludge.
2) When practical, use thin disposable latex gloves for light work. Use reinforced rubber gloves for heavy activities. Discard gloves that become torn and try not to submerge hand below top of glove during service activities. When it is not feasible to use gloves while installing or inspecting equipment, make sure to follow personal hygiene practice listed above.
3) Wear goggles in the presence of heavy aerosols, dust, or when splashing of wastewater might occur.
4) Wear protective clothing; if possible, shower and change clothes before leaving plant site. If work clothes are washed at home, separate from the family wash and use chlorine bleach.

Confined Space Hazard

1) Verify the designation of the tank before entering. If it is defined as a confined space follow plant directives for entry. Generally a confined space is defined as having limited or restricted means of entry or exit; is large enough for an employee to enter and perform assigned work; and is not designed for continuous worker occupancy. Typical confined spaces are silos, digesters, boilers, vaults, sewers, pipelines, pump pits, ducts and compartments.
2) Wastewater tanks or basins can also be confined spaces and contain potential hazards. Flammable, explosive, toxic, or other hazardous substances or the absence of sufficient oxygen could cause injury, acute illness, disability, or death. Particular care should be exercised to assure NO hydrogen sulfide, chlorine or other heavier than air gases have not accumulated in the basins or tanks. DO NOT ENTER ANY CONFINED SPACE until your supervisor has verified that proper safety precautions have been met. Do not enter a confined space without someone else present on the outside and do not enter a confined space without proper rescue equipment outside the confined space. Every confined space entry has a unique set of hazards, but atmospheric monitoring and proper entrance procedures can minimize the hazards entry personnel typically encounter.

Operation Instructions

Description of the Aeration-Mixing System

r.2015-01-02

The aeration-mixing system employs a main air header and valved lateral piping system to distribute air throughout the basin. EDI normally designs the aeration system piping to provide uniform air distribution without adjustment to the isolation/throttling valves on the laterals. However, these valves are typically provided for direct control of airflow distribution on large aeration systems or for process control. If process demands dictate a revised airflow distribution pattern, contact EDI for guidance on modification to the system.

Normal Operation of the Aeration System

The following procedures should be followed on a regular basis to assure consistent and satisfactory performance of the aeration-mixing system.

The air rate to the system may be adjusted to maintain the desired dissolved oxygen levels in the basin. When adjusting the airflow rate, the diffusers should be operated within the normal operating range of the diffuser. Excessive airflow rates will result in high pressure drops across the diffuser and reduced oxygen transfer performance. Low airflow rates may result in incomplete utilization of the diffuser membrane and reduced air distribution.

The aeration-mixing system is designed to provide uniform aeration. Positive dissolved oxygen concentrations should be present throughout the entire system during normal operation. A dissolved oxygen profile analysis may be used to confirm the performance of the aeration system. Typically, the dissolved oxygen levels are measured at the inlet, the outlet, and the midpoint locations of each basin to determine the aeration system performance. In regulating the system airflow to control dissolved oxygen levels, the diffuser units should be operated within their minimum and maximum airflow limits.

In applications where water level variations may exist between aeration basins supplied by a single blower, the isolation valves may need to be adjusted to maintain adequate airflow distribution. This normally requires valving back the air to the basin with the reduced water level.

Note

It is important to confirm the operating airflow range of the diffuser units before valving back any isolation valve. Damage could result to the aeration diffuser if airflow is above the recommendations noted in the Product Specification Sheet. Please consult EDI to confirm operating procedure before adjusting any aeration isolation/throttling valve.

Normal Operation of the Blower System

The Aeration-Mixing System normally utilizes a centrifugal or positive displacement (PD) blower system consisting of one or more blower units for normal operation plus one on-line spare unit. All blower units including the spare unit must be operated on a regular basis to maintain their proper working condition. EDI recommends that blower units be operated sequentially with idle blower units brought on-line weekly. EDI does not recommend the simultaneous operation of on-line and spare blowers for an extended period. This operating condition may deliver airflows exceeding the air capacity of the diffuser units.

All blower components should be serviced on a regular basis. For additional information concerning proper blower operation, service requirements or service intervals, reference the Blower Operation and Maintenance manual.

Shutdown Conditions

If air service is interrupted at any time, it should be restored as soon as possible. When restarting positive displacement blower units, the start-up pressure surge should be reduced by down-weighting the pressure relief valve (PRV) or operating the blow-off valve. Once the blower is operational, reset the PRV or slowly close the blow-off valve over a five- to ten-minute period. The PRV must be set properly to prevent overloading of the blower system. Operate manual water purge devices if provided. If the PRV releases air for an extended period of time, the relief setting should be checked.

When diffusers are installed in basins or lagoons and are not going to be in operation for an

extended time (4 to 6 weeks), the diffusers should be covered with approximately 4 feet of water.

- In the summer, this protects the diffusers from excessive heat and provides UV protection.
- In winter, EDI recommends that the diffusers be covered with a sufficient amount of water so that if ice forms there is always a minimum liquid clearance that measures approximately 4 feet between the bottom of the formed ice and the diffuser system. This water buffer will keep the ice and its possible damaging effects away from the diffuser system.

Furthermore, the system may be idle or remain active during this period. If the aeration system will be active, operate the system at a minimum air flow so as to avoid movement of ice.

The water level in the basin/lagoon should never be lowered if there is ice present. The weight of the ice or breaking into pieces will invariably cause severe damage to membranes and/or piping.

Slowly starting up the aeration system will aid in the melting of the formed ice. This is to be done with great caution as not to exert any undo forces on piping or equipment that penetrates or is entrapped in the ice surface, and to avoid damage from ice movement as blocks of ice become free to move.

If the basin is to be idle for a prolonged time period, the basin should be drained and cleaned.

Note

Maintain the minimum airflow to the system during the drain-down procedure. For maximum protection of the aeration system, refill the basin to completely submerge the aeration system. This provides thermal protection in the event of severe cold or hot weather conditions.

Contact EDI for additional operation and maintenance information if it is necessary to decrease the system airflow during cold weather.

Operation of the Diffuser Unit

The diffuser unit has no moving parts and requires very little maintenance for long-term operation. EDI recommends that the air supply to the diffusers be maintained at all times for optimum performance. The airflow to the diffuser units must be kept within the ranges noted in the Product Specification Sheet to maintain the structural and operating characteristics of the diffuser membrane. Continuous application of high airflows, greater than denoted for normal operation, may result in physical damage to the diffuser membrane.

Note

Use caution when adjusting several lateral throttling valves in the same piping system. This procedure can result in elevated airflows in sections of the basin, exceeding the maximum allowable airflow to each diffuser unit.

Preventive Maintenance

Maintenance Schedule

r.2015-05-20

EDI recommends accessing the FlexAir aeration system on a regular basis (annually) to visually inspect the overall system and clean the membranes to remove any accumulated foulants. This activity is beneficial to the Owner, as a reduction in the uniformity of air release or an increase in backpressure will impact the power use. The FlexAir aeration system is designed to allow the diffuser units to be individually retrieved while the system is in operation. Turn the air off to the diffusers around the area where on-water maintenance (accessing or lifting of diffuser assemblies) is to be completed.

The FlexAir diffuser assembly is typically provided with polypropylene (PP) rope retrieval assembly. This feature allows for visual inspection of the diffuser unit without disconnecting the airline. Lift diffuser assembly into boat by rope being careful not to drop or damage diffuser unit.

The following items may be helpful in servicing the FlexAir aeration system during periodic inspections or maintenance procedures:

- Protective gloves and clothing
- Crimping or nipper pliers and screwdriver
- Long-handled bristle brush to cleaning assembly for observation
- Spare FlexAir membranes and crimping clamps
- Channel lock pliers to remove the PVC insert adapter

FlexAir Aeration System Inspection

All system components should be inspected for general wear or damage. This includes but is not limited to:

- Ballast and ballast components including anchor bolts, pipe straps and fasteners.
- All accessible pipe connections including, fasteners, shifts in alignment of pipes and joints, etc.
- Diffuser assembly including position, membrane integrity, membrane clamps, etc.
- Flex hose and Flex hose connections, including T-bolt clamps.

Any worn or damaged components need to be repaired or replaced. Please contact EDI for assistance in identifying a root cause and solution.

In Situ Cleaning of Membrane

Typically rubber membrane diffuser units will require cleaning because of two common types of surface build-up: biological and inorganic scaling. The recommended cleaning procedures for both types of build-up are detailed below:

Biological build-up is a moss-like growth. The recommended cleaning procedure is to physically dislodge the growth either by gently brushing the substance off with a soft plastic bristle brush or by using low-pressure hosing. Care should be taken not to abrade the membrane surface during the cleaning procedure.

In Situ Acid Cleaning

When standard cleaning methods do not produce desired results, inorganic scaling may be present and may require an alternate cleaning technique. Inorganic scaling is a granular mineral-like precipitate that can form on the membrane surface.

Warning: Read all applicable SDS (Safety Data Sheets) carefully and follow all instructions given therein. Always have new users familiarize themselves with the SDS before handling chemicals.

Wear personal protective equipment (including, but not limited to, rubber gloves, safety goggles, and other protective clothing) as required.

The foulant adhered to a membrane can be tested with a solution of muriatic acid (20° Baume Hydrochloric Acid, 31.45% by weight HCl) for reactivity. This may indicate the nature of the foulant and its propensity for chemical cleaning. Ensure that the air supply has been

turned off from the diffusers being serviced. Afterwards, place a small amount of acid on the surface of the membrane where fouling is most prevalent. If the foulant is reactive to acid, this is indicative of inorganic fouling, such as calcium deposits, and acid cleaning is recommended. Otherwise, the foulant is typically organic and acid cleaning may not prove effective.

If it is determined that the foulant does respond to acid, the membrane may be cleaned with acid in addition to manual cleaning. This technique involves applying Muriatic Acid directly to the membrane surface after the manual cleaning procedure followed by rinsing with a low-pressure hose. In the case of ceramic diffusers, the acid is typically applied both on the surface and pumped through the diffuser using air.

Note: *EDI can provide an acid injection system, upon request, for cleaning aeration systems without process interruptions. Contact EDI for more information.*

Membrane Protection

The diffuser membranes should be protected from chemicals that may be harmful to the material. If using a cleaning aid or other substance on or around the membranes, please contact EDI for chemical compatibility.

Good air filtration is required with all FlexAir units. The blower system should be equipped with inlet filters having a performance efficiency of 93% removal of 10-micron particles to prevent clogging of the diffuser membrane. Follow blower manufacturer's recommendations regarding care and maintenance of inlet filters.

Lateral Tension Adjustment

1) The lateral piping will experience expansion and contraction as temperatures change. Adjustments of the lateral tether restraints are required in order to keep the appropriate tension on the laterals. The tether ropes/cables connecting the lateral to the anchors should be adjusted seasonally. The tether should be tight enough to restrict significant side to side movement of the lateral, but not tight enough to suspend any portion of the lateral out of the water. Note: In most cases, it will be impossible to keep the lateral from having some side to side movement.

Corrective Maintenance

Replacing FlexAir Diffuser Membranes

r.2011-10-18

If it becomes necessary to replace rubber membranes, the guidelines below should be followed:

1) Remove the stainless steel (S.S.) crimping clamps. This is easily accomplished by bending back the small tab on the clamp with a crimping tool or screwdriver. The operator should not attempt to snip or cut the ear of the clamp because S.S. material is very strong and excessive force is required to shear the material.
2) Gently pull the rubber membrane off the support to avoid breaking or damaging the support.
3) Gently install new membrane ensuring the non-perforated area is installed centered over the air discharge holes.
4) S.S. crimping clamps should be fully compressed with outside edge of the clamp located 1/4" (6mm) from the edge of the membrane. For EPDM membranes, the ear of clamp shall be placed on top of unit. For PU membranes, the ear of clamp shall be placed 45-degrees from the top of unit.

Troubleshooting

r.2015-01-02

The FlexAir aeration system requires very little maintenance for long-term operation. Periodic visual inspection of the system should allow the Operator to determine if the system is performing at optimum levels. For example, diffuser unit elevation variations greater than specified in the installation instructions will reduce the uniformity of air distribution in the system.

In addition, operating airflows below the design condition will also reduce the uniformity of air distribution. If operating conditions warrant airflow rates below the design condition, contact EDI for additional operational guidelines.

Below are symptoms and procedures to follow if inspection of the aeration system reveals abnormal operating characteristics:

Large volume of air in localized area.

Possible Cause:

1) Air leak in aeration piping.
2) Diffuser membrane damaged or missing.

Procedure:

1) Access area in question. Inspect joints for evidence of breakage.
2) Inspect diffuser units for membrane damage. Repair as required.

Decreased diffuser activity and increased back pressure noted at blower.

Possible Cause:

1) Diffusers becoming fouled or deformed.
2) Reduced blower discharge air volume.
3) Restriction in air header.

Procedure:

1) Access diffusers and inspect for external or internal fouling or deformation.
2) Confirm blower operating point and rpm reading.
3) Confirm isolation valve position on header and drops.

Dissolved oxygen profile not satisfactory throughout basin.

Possible Cause:

1) Increased loading to system.
2) Reduced blower discharge air volume.
3) Improper distribution of air in system.
4) Air leak in system.
5) Excessive foulant accumulated on diffuser.

Procedure:

1) Confirm loading to system.
2) Confirm blower operations.
3) Inspect piping for leaks, both in-basin piping and out of basin piping leading from the blower system.
4) Same as # 3.
5) Access diffusers and inspect for external fouling.

Replacing Suspended Diffuser Assembly

r.2011-10-18

If it becomes necessary to remove and replace an entire diffuser assembly while in the boat, the general procedures outlined below should be followed:

1) Turn the air off to the diffusers around the area where on-water maintenance (accessing or lifting of diffuser assemblies) is to be completed.
2) Locate boat over diffuser unit and access the diffuser airline to lateral outlet connection.
3) Lift air lateral out of water at the location of the diffuser outlet to access the airline connection. Loosen the 2 hose clamps and pull airline from outlet. Leave retrieval rope tied to lateral piping and the diffuser ballast.
4) With diffuser unit free of lateral, lift the entire diffuser assembly into the boat. Mark airline and diffuser unit with permanent marker to aid in the realignment of the diffuser unit. The system is designed to have diffuser assemblies in a specific orientation relative to the lateral piping. See EDI layout drawing for the orientation to be used. The airline has lines of printed text on it, which may be used as a reference mark to help align the diffuser assemblies correctly.
5) EDI recommends leaving the lateral out of the water until the diffuser unit is replaced to minimize the chance for process water entering the air piping at the diffuser location.
6) Remove airline from diffuser hub by loosening the 2 S.S. hose clamps and pulling airline from diffuser hub.
7) Remove old diffuser unit from ballast by removing the 4 nuts holding the hub and attach new diffuser unit to the ballast. If the unit features individually threaded diffuser arm, unthread counter clockwise the diffuser arm from the hub leaving the rubber gasket. Thread new diffuser arm onto the diffuser hub using pipe dope on the threads as a sealant. Note: Avoid the use of excessive pipe dope on the threads as it may dislodge and foul aeration diffuser membranes. Do not over-tighten the arm as this may damage the plastic threads. When the diffuser is tight make sure the stepless ear clamp on the diffuser arm is on top for an EPDM membrane, or 45˚ from the top for a Polyurethane membrane.
8) Slide the end of the airline squarely over the insert of the adapter insuring that the airline butts to the shoulder of the fitting. A rubber lubricant or a 50% solution of Murphy's™ soap and water may be applied to both the barbs and the inside diameter of the airline to aid in installation. Secure airline with 2 SS hose clamps.
9) Lower diffuser unit into water with the retrieval rope.
10) Slide the end of the airline squarely over the diffuser airline connection. A lubricant such as pipe dope may be applied to both the insert fitting and the inside diameter of the airline to aid in installation. Note: Avoid the use of excessive pipe dope as it may dislodge and foul aeration piping and/or diffuser membranes. Secure airline with 2 SS hose clamps.
11) Slowly release the retrieval rope with the rope still tied off on the lateral piping. Slowly lower lateral piping into the water.

Removal of Suspended Diffuser - Repair Work Performed Off Site

If it becomes necessary to remove an entire diffuser assembly for work to be performed out of the basin, the general procedures outlined below should be followed:

1) Turn the air off to the diffusers around the area where on-water maintenance (accessing or lifting of diffuser assemblies) is to be completed.
2) Locate boat over diffuser unit and access the diffuser airline to lateral outlet connection.
3) Lift air lateral out of water at the location of the diffuser outlet to access the airline connection. Loosen the 2 hose clamps and pull airline from outlet.
4) With diffuser unit free of lateral, lift the entire diffuser assembly into the boat. Untie retrieval rope from lateral piping.
5) Plug diffuser outlet airline connection and lower lateral piping back into water.
6) Transport diffuser unit to work area.

7) To re-install the diffuser assembly to the lateral piping, lift air lateral out of water as in Step 2. Tie retrieval rope to lateral piping. Lower diffuser unit into water with the retrieval rope, being careful to keep upper end of airline out of the water.

8) Slide the upper end of the airline squarely over the diffuser airline connection on the lateral piping. A rubber lubricant or a 50% solution of Murphy's™ soap and water may be applied to both the barbs and the inside diameter of the airline to aid in installation. Secure airline with 2 SS hose clamps.

9) Slowly release the retrieval rope with the rope still tied off on the lateral piping. Slowly lower lateral piping into the water.

Questions regarding the aeration-mixing system operation, maintenance, etc. should be forwarded to Environmental Dynamics International, 5601 Paris Road, Columbia, Missouri 65202. +1(573)474-9456.

AERATION WORKS®

The global leader in wastewater service and maintenance

- System installations
- Preventative maintenance
- System evaluations
- Guaranteed performance
- Extended warranties available

We know aeration.

High quality standards with efficient solutions to any issue you may face

AerationWorks is the largest and most respected wastewater aeration maintenance and installation firm in the world. We have done projects in the US, Mexico, Europe, China, Russia, South America, and Canada. From system evaluations to system installations, the highly trained team at AerationWorks can help with all your aeration needs.

From system evaluations and installations to refurbishing the entire aeration system, Aeration Works has the knowledge and tools to conduct any aeration repair you may need.

Visit www.aerationworks.com to discover all the benefits!

EDI® aeration for life®

Environmental Dynamics International

Service Department

- On-site staff training
- Inspect installation & supervision
- Start-up services
- Maintenance training
- Troubleshooting

We know service.

Quality on-site customer service from experienced professionals

In addition to the highest quality products, EDI is pleased to offer superior customer & field services. EDI is able to provide these services directly from the EDI Headquarters in Columbia, Missouri, as well as maintaining localized field service offices worldwide.

In order to allow reasonable scheduling and to ensure an EDI representative is available, at least three weeks' notice is needed when requesting service.

EDI provides municipal and industrial treatment solutions in over 100 countries, has performed over 7,000 installations, and treats the wastewater need for an equivalent of more than 400 million people across the globe.

Visit www.environmentaldynamics.com to contact one of our field service representatives to serve your project site!

EDI®
aeration for life®

DIFFUSER EXPRESS®

Aeration parts for all brands

- Express service
- Wide variety of parts
- Competitive pricing
- Specialty items
- Membrane replacements

Got diffusers?

High-quality, aftermarket wastewater aeration parts

Diffuser Express (DX) products will keep your aeration system at the front edge of technology. DX stocks a multitude of high-quality aftermarket replacement membranes and parts to upgrade your existing system for improved operational efficiency or increased capacity.

When application know-how or total system design assistance is required, Diffuser Express can serve as a direct link to EDI's Application Engineering Group. From here, you will benefit from the vast aeration and biological treatment expertise that EDI has amassed from servicing customers around the world since 1975.

EDI® aeration for life®

Visit www.DiffuserExpress.com to download our parts catalog and discover all the benefits!

FPZ – CHECK VALVES

Gauges, Check Valves, Silencers, Enclosures

SS1708

Gauges

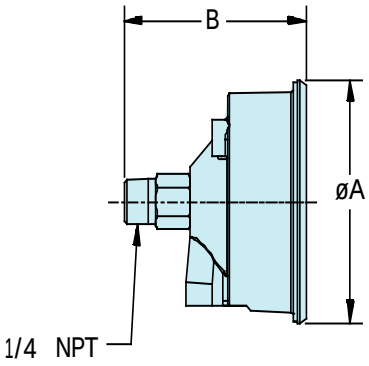

Gauges are important for monitoring the operating pressure or vacuum of the blower. Gauges should be positioned as close to the blower as possible.

Part number	Duty	Scale	A	B
VG25-60	Vacuum	0-60" H_2O	2.88	2.59
VG25-200	Vacuum	0-200"H_2O		
VG25-300	Vacuum	0-300" H_2O		
PG25-60	Pressure	0-60" H_2O		
PG25-200	Pressure	0-200" H_2O		
PG25-300	Pressure	0-300" H_2O		
PG25-15*	Pressure	0-15 psi	2.7	2.25

Dimensions in inches. Tolerance on given values ± 10% - unbinding and can be changed without prior notice.

*PG25-15 is suitable for outdoor use

Check Valves

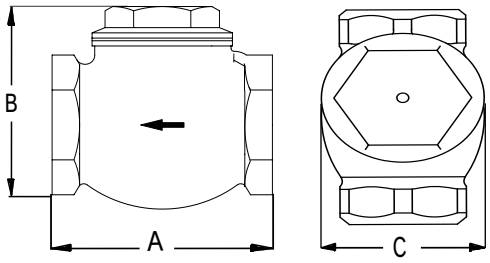

Swing check valves allow air to flow in one direction. These valves prevent backflow into the blower and are supplied in bronze or brass.

Part Number	NPT	A	B	C
CV075	0.75"	2.4		
CV10	1"	2.8	2.7	1.9
CV125	1.25"	3.2	3.2	2.2
CV15	1.5"	3.6	3.5	2.5
CV20	2"	4.3	4.2	3.1
CV30	3"	5.8	6.1	4.2
CV40	4"	6.9	7.1	5.5

Dimensions in inches. Tolerance on given values ± 10% - unbinding and can be changed without prior notice.

Silencers

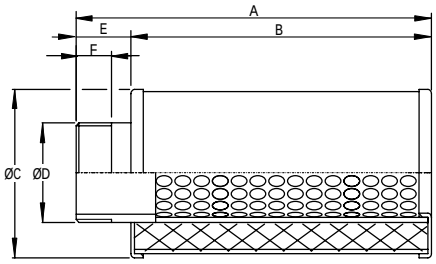

Silencers provide additional sound attenuation.

TYPE	D	A	B	C	E	F	lbs
SS 4	1" 1/4	7.5	5.5	2.8	2	0.6	0.8
SS 5	1" 1/2	7.9	6.7	3.1	1.2	0.8	1.1
SS 6	2"	9.1	7.9	3.5	1.2	0.8	1.3
SS 8	3"	19.1	15.7	6.0	3.3	0.8	4.8
SS 9	4"	18.3	16.9	6.7	1.1	0.8	9.9

Steel manufactured (apart from SI 9 / SS 9 - entirely in aluminium) with sound absorbing polyurethane element.

Dimensions in inches. Tolerance on given values ± 10% - unbinding and can be changed without prior notice.

Sound Enclosures

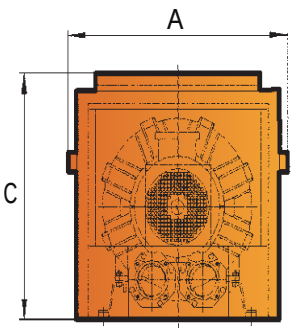

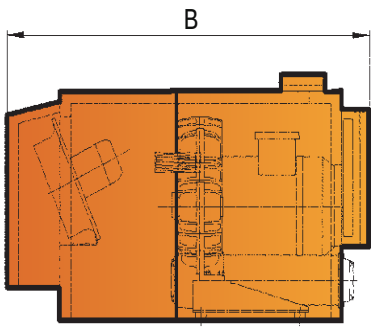

Part #	Used on models	A	B	C
IH1	SCL K03-MS	13.4	18.2	15.8
IH3	SCL K04-MS	14.3	19.7	16.5
IH5	SCL K05-6 MS + 30-40DH	16.9	26.8	21.3
IH7	SCL K07-8 MS / MD	31.7	64.4	26
IH8	SCL K07-8 TD	31.7	64.4	26
IH9	SCL K07-8 TS	31.7	64.4	26
IH10	SCL K09-12 MS/MD	31.7	67.2	30
IH11	SCL K09-10 TD	31.7	67.2	30
IH12	SCL K11-TD	31.7	67.2	30
IH13	SCL K09-11 TS	31.7	67.2	31.5

Dimensions in inches - unbinding and can be changed without prior notice.

FPZ – REGENERATIVE BLOWERS

FPZ S.p.A.
Via F.lli Cervi 16
20863 Concorezzo (MB), ITALIA
Tel. +39 039 69 06 811
info@fpz.com www.fpz.com

COMPRESSORI-ASPIRATORI A CANALE LATERALE	**ISTRUZIONI**	**I**
LATERAL CHANNEL BLOWERS-EXHAUSTERS	**INSTRUCTIONS**	**GB**
COMPRESSEURS – ASPIRATEURS A CANAL LATERAL	**INSTRUCTIONS**	**F**
COMPRESORES – ASPIRADORES DE CANAL LATERAL	**INSTRUCCIONES**	**E**
SEITENKANALVERDICHTER-VAKUUMPUMPEN BAUREIHE	**BETRIEBSANLEITUNG**	**D**
COMPRESSORES - EXAUSTORES DE CANAL LATERAL	**INSTRUÇÕES**	**PB**

LEGGERE ATTENTAMENTE TUTTE LE ISTRUZIONI E CONSERVARLE	*I*
PLEASE READ CAREFULLY ALL INSTRUCTIONS AND KEEP THEM FOR FUTURE REFERENCE	*GB*
LIRE ATTENTIVEMENT TOUTES LES INSTRUCTIONS ET LES CONSERVER	*F*
SIRVASE LEER CUIDADOSAMENTE TODAS LAS INSTRUCCIONES Y CONSERVARLAS PARA FUTURA REFERENCIA	*E*
ALLE ANLEITUNGEN SIND SORGFÄLTIG ZU LESEN UND AUFZUBEWAHREN!	*D*
LEIS DILIGENTEMENTE TODAS ESTAS INSTRUÇÕES E CONSERVE-AS	*PB*

SCL K03 / K04 / K05 / K06 / K07 / K75 / K08 / K09 / K10 / K11 / K12 MS-MOR

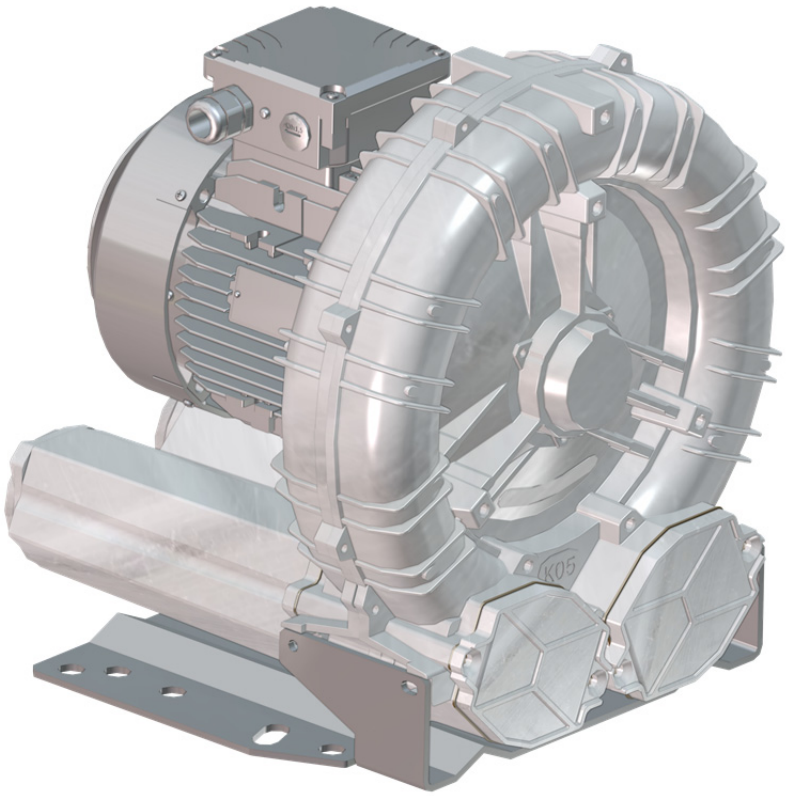

COMPANY WITH QUALITY MANAGEMENT SYSTEM CERTIFIED BY DNV
= ISO 9001:2008 =

FPZ S.p.A.
Via F.lli Cervi 16
20863 Concorezzo (MB), ITALIA
Tel. +39 039 69 06 811
info@fpz.com www.fpz.com

FPZ BLOWER TECHNOLOGY

DICHIARAZIONE DI CONFORMITÁ
DECLARATION OF CONFORMITY

Il Fabbricante — FPZ S.p.A.
The manufacturer — Via F.lli Cervi, 16

Dichiaria che la macchina — SOFFIANTE A CANALE LATERALE
Declares that the machineries — *Lateral channel blowers-exhausters*

Modello *Models*	**Serie** *series*	**Esecuzione** *Execution*	**Versione** *Version*
K03, K04, K05, K06, K07, K75, K08, K09, K10, K11, K12	MS	MOR	EU, USA, TMS, BPA
K07R, K08R, K09, K10, K11, K12	MD		

al quale questa dichiarazione si riferisce è conforme alla seguente Direttiva:
to which this declaration relates complies with the following Directives:

- Direttiva Macchine 2006/42/CE — *- Machinary directive 2006/42/EC*

E' conforme alle disposizioni pertinenti delle seguenti altre direttive:
It fulfils also the relevant provisions of the following Directives:

- Direttiva Compatibilità Elettromagnetica 2004/108/CE — - Direttiva Bassa Tensione 2006/95/CE
- *Electromagnetic compatibility (EMC) directive EC 2004/108* — *- Low voltage directive 2006/95/EC*

Inoltre dichiara che sono state applicate le seguenti norme armonizzate:
Also declares that the following Harmonised standards have been applied:

- UNI EN ISO 12100 — - ISO/TR 14121 – 2

Nome ed indirizzo della persona autorizzata a costituire il Fascicolo Tecnico:
Name and address of the person authorised to compile the Technical File:

- Andrea Lazari Via F.lli Cervi 16 – 20863 Concorezzo (MB)

Concorezzo (MB), *data 01.08.2013*

Amministratore Delegato
Managing Director
Sergio Ferigo

Direttore Tecnico
Technical Manager
Andrea Lazari

COMPRESSIONE	**DATI CARATTERISTICI**	**I**
COMPRESSION	**PERFORMANCE TABLE**	**GB**
COMPRESSION	**CARACTÉRISTIQUES TECHNIQUES**	**F**
COMPRESIÓN	**DATOS CARACTERÍSTICOS**	**E**
KOMPRESSION	**LEISTUNGDATEN**	**D**
COMPRESSÃO	**DADOS CARACTERÍSTICOS**	**PB**

Mod	N 2900 rpm [kW]	N 3500 rpm [kW]	Q max 2900 rpm [m³/h]	Q max 3500 rpm [m³/h]	ΔP max 2900 rpm [hPa] (mbar)	ΔP max 3500 rpm [hPa] (mbar)	Leq[1] 2900 rpm (Lp) [dB(A)]	Leq[1] 3500 rpm (Lp) [dB(A)]	Peso[2] Weight[2] Poids[2] Gewicht [kg]	Ps max A [bar]
K03-MS	**0,37**	0,43	74	89	130	120	59,7	61,7	11	1,8
	0,55	0,63	74	89	180	200	60	62	12	1,8
K04-MS	**0,75**	0,9	137	166	140	120	62,6	64,6	15,8	1,8
	1,1	1,3	137	166	200	175	62,8	64,8	16,5	1,8
	1,5	1,75	137	166	250	250	63	65	19,5	1,8
K05-MS	**1,1**	1,3	219	265	130	100	68,2	70,2	22,5	2
	1,5	1,75	219	265	175	160	68,5	70,5	23,5	2
	2,2	2,55	219	265	270	260	68,8	70,8	26,5	2
	3	3,45	219	265	300	350	69,1	71,1	30,5	2
K06-MS	**2,2**	2,55	304	366	180	150	71	73	31,2	2
	3	3,45	304	366	250	220	71,3	73,3	32,5	2
	4	4,6	304	366	340	325	71,6	73,6	41	2
K07-MS	**2,2**	2,55	414	499	130	100	76,4	78,4	46,5	2,8
	3	3,45	414	499	200	175	76,7	78,7	47,5	2,8
	4	4,6	414	499	280	250	77	79	51	2,8
	5,5	6,3	414	499	400	375	77,3	79,3	61,5	2,8
K75-MS	**4**	4,6	477	576	150	100	77,4	79,4	51,5	2,8
	5,5	6,3	477	576	250	200	77,7	79,7	62	2,8
	7,5	8,7	477	576	325	300	78	80	67	2,8
K08-MS	**3**	3,45	536	647	125	100	77,4	79,4	49	2,8
	4	4,6	536	647	180	150	77,7	79,7	52,5	2,8
	5,5	6,3	536	647	275	250	78	80	63	2,8
	7,5	8,7	536	647	400	375	78,3	80,3	68	2,8
	9,2	10,6	536	647	450	450	78,6	80,6	77,5	2,8
K09-MS	**4**	4,6	663	800	130	85	78	80	62	2,8
	5,5	6,3	663	800	210	150	78,2	80,2	72,5	2,8
	7,5	8,7	663	800	290	250	78,5	80,5	77,5	2,8
	9,2	10,6	663	800	350	325	78,7	80,7	87	2,8
	11	12,7	663	800	450	400	79	81	87,5	2,8
K10-MS	**5,5**	6,3	782	944	160	115	78,1	80,1	75	2,8
	7,5	8,7	782	944	250	200	78,5	80,5	80	2,8
	9,2	10,6	782	944	300	270	79	81	89,5	2,8
	11	12,7	782	944	400	375	79,4	81,4	90	2,8
	15	17,4	782	944	500	500	79,6	81,6	95	2,8
K11-MS	**7,5**	8,7	915	1105	175	130	80	82	83,5	2,8
	9,2	10,6	915	1105	230	175	80,1	82,1	93	2,8
	11	12,7	915	1105	300	250	80,4	82,4	93,5	2,8
	15	17,4	915	1105	400	350	80,7	82,7	98,5	2,8
	18,5	21,5	915	1105	500	500	83,6	85,6	128,5	2,8
K12-MS	**9,2**	10,6	1022	1234	150	100	80,6	82,6	96,5	2,8
	11	12,7	1022	1234	200	150	80,9	82,9	97	2,8
	15	17,4	1022	1234	300	275	81,2	83,2	102	2,8
	18,5	21,5	1022	1234	425	375	84,1	86,1	132	2,8

[1] Rumorosità misurata alla distanza di 1 m con aspirazione e mandata canalizzate, secondo la Normativa ISO 3744
Noise measured at 1 m distance with inlet and outlet ports piped, in accordance to ISO 3744
Niveau de bruit mesuré a 1 m de distance, conduits d'aspiration et refoulement raccordés selon la norme ISO 3744
Rumorosidad medida a 1 m de distancia de los puertos de admisión y descarga, según la Normativa ISO 3744.
Schalldruckpegel, mit angeschlossener Schlauchleitung am Ein- und Auslass, im Abstand von 1 m gemäß ISO 3744 gemessen
Nível de rumor medido à distancia de 1 m. com aspiração e fluxo canalizados de acordo com a Normativa ISO 3744.

[2] Il valore indicato è riferito alla macchina con motore trifase per esecuzione MOR, senza il motore elettrico per esecuzioni GOR e GVR.
Value refers to the weight of the machine with 3 Phase motor if MOR range, without motor if GOR or GVR range.
Le valeur se refère à la turbine 3-phasé en execution MOR et GOR/GVR pour la turbine sans moteur.
El valor indicado se refiere al equipo con motor trifásico para la ejecución MOR. Sin el motor eléctrico para las ejecuciones GOR y GVR.
Die Angaben zum Gewicht beziehen sich bei der Baureihe MOR auf die Ausführung mit 3-phasigen Motoren und bei den Baureihen GOR und GVR auf die Verdichteraggregate ohne Motoren.
O valor refere-se à máquina com motor trifásico para a execução de MOR, sem o motor elétrico para execuções GOR e GVR.

N: Potenza installata
N: Installed motor power
N: Puissance installé
N: Potencia instalada
N: Installierte motorleistung
N: Capacidade instalada

Q: Portata
Q: Flow rate
Q: Débit
Q: Caudal
Q: Volumenstrom
Q: fluxo

ΔP: Pressione differenziale
ΔP: Differential pressure
ΔP: Pression différentielle
ΔP: Presión diferencial
ΔP: Druckdifferenz
ΔP: pressão difFerencia

Leq: Rumorosità
Leq: Noise
Leq: Niveau sonore
Leq: Rumorosidad
Leq: Schalldruckpegel
Leq: Rumor

ASPIRAZIONE	**DATI CARATTERISTICI**	**I**
ASPIRATION	**PERFORMANCE TABLE**	**GB**
ASPIRATION	**CARACTÉRISTIQUES TECHNIQUES**	**F**
ASPIRACIÓN	**DATOS CARACTERÍSTICOS**	**E**
VAKUUMBETRIEB	**LEISTUNGDATEN**	**D**
ASPIRAÇÃO	**DADOS CARACTERÍSTICOS**	**PB**

Mod	N 2900 rpm [kW]	N 3500 rpm [kW]	Q max 2900 rpm [m³/h]	Q max 3500 rpm [m³/h]	ΔP max 2900 rpm [hPa] (mbar)	ΔP max 3500 rpm [hPa] (mbar)	Leq¹ 2900 rpm (Lp) [dB(A)]	Leq¹ 3500 rpm (Lp) [dB(A)]	Peso² Weight² Poids² Gewicht² [kg]	Ps max A [bar]
K03-MS	**0,37**	0,43	74	89	120	120	58,7	60,7	11	1,8
	0,55	0,63	74	89	160	200	59	61	12	1,8
K04-MS	**0,75**	0,9	137	166	140	120	61,6	63,6	15,8	1,8
	1,1	1,3	137	166	200	175	61,8	63,8	16,5	1,8
	1,5	1,75	137	166	225	250	62	64	19,5	1,8
K05-MS	**1,1**	1,3	219	265	130	100	67,2	69,2	22,5	2
	1,5	1,75	219	265	175	160	67,5	69,5	23,5	2
	2,2	2,55	219	265	240	260	67,8	69,8	26,5	2
	3	3,45	219	265	-	275	-	70,1	30,5	2
K06-MS	**2,2**	2,55	304	366	180	150	70	72	31,2	2
	3	3,45	304	366	250	220	70,3	72,3	32,5	2
	4	4,6	304	366	270	325	70,6	72,6	41	2
K07-MS	**2,2**	2,55	414	499	130	100	75,4	77,4	46,5	2,8
	3	3,45	414	499	200	175	75,7	77,7	47,5	2,8
	4	4,6	414	499	280	250	76	78	51	2,8
	5,5	6,3	414	499	325	375	76,3	78,3	61,5	2,8
K75-MS	**4**	4,6	477	576	150	100	76,4	78,4	51,5	2,8
	5,5	6,3	477	576	250	200	76,7	78,7	62	2,8
	7,5	8,7	477	576	-	300	-	79	67	2,8
K08-MS	**3**	3,45	536	647	125	100	76,5	78,5	49	2,8
	4	4,6	536	647	180	150	76,8	78,8	52,5	2,8
	5,5	6,3	536	647	275	250	77,1	79,1	63	2,8
	7,5	8,7	536	647	350	375	77,4	79,4	68	2,8
	9,2	10,6	536	647	-	-	-	-	77,5	2,8
K09-MS	**4**	4,6	663	800	130	85	77,1	79,1	62	2,8
	5,5	6,3	663	800	210	150	77,3	79,3	72,5	2,8
	7,5	8,7	663	800	290	250	77,6	79,6	77,5	2,8
	9,2	10,6	663	800	350	325	77,8	79,8	87	2,8
	11	12,7	663	800	-	375	-	80,1	87,5	2,8
K10-MS	**5,5**	6,3	782	944	160	115	77,4	79,4	75	2,8
	7,5	8,7	782	944	250	200	77,7	79,7	80	2,8
	9,2	10,6	782	944	300	270	78,2	80,2	89,5	2,8
	11	12,7	782	944	350	375	78,5	80,5	90	2,8
	15	17,4	782	944	-	-	-	-	95	2,8
K11-MS	**7,5**	8,7	915	1105	175	130	80	82	83,5	2,8
	9,2	10,6	915	1105	230	175	80,5	82,5	93	2,8
	11	12,7	915	1105	300	250	81	83	93,5	2,8
	15	17,4	915	1105	350	350	81,8	83,8	98,5	2,8
	18,5	21,5	915	1105	-	-	-	-	128,5	2,8
K12-MS	**9,2**	10,6	1022	1234	150	100	81	83	96,5	2,8
	11	12,7	1022	1234	200	150	81,5	83,5	97	2,8
	15	17,4	1022	1234	300	275	82,3	84,3	102	2,8
	18,5	21,5	1022	1234	325	350	85,2	87,2	132	2,8

INGOMBRI
DIMENSIONS
DIMENSIONS
DIMENSIONES
ABMESSUNGEN
DIMENSÕES EXTERIORES

(K03-MS/K04-MS/K05-MS/K06-MS)

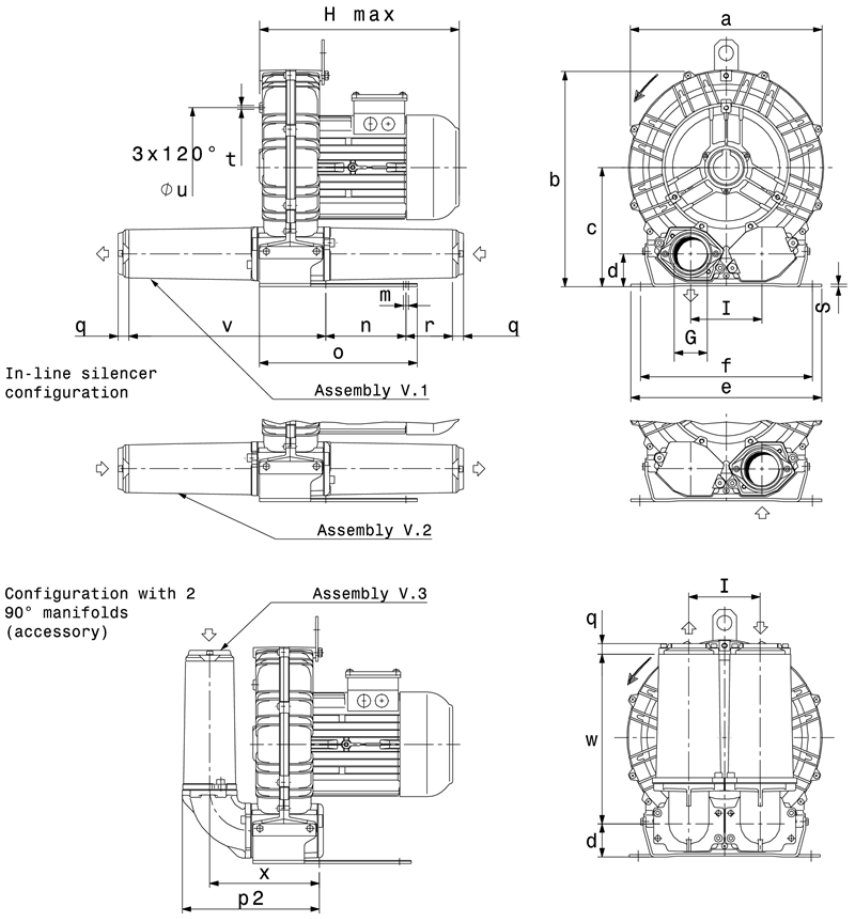

Misure in mm, Dimensions in mm, Dimensions en mm, Medidas in mm, Abmessungen in mm, Dimensões em mm

Mod	a	b	c	d	e	f	G	H
K03-MS	241	268	147	43	230	205	G 1" ¼	241
K04-MS	285	315	172	49	255	225	G 1" ½	310
K05-MS	327	365	200	54	320	260	G 2"	375
K06-MS	376	393	205	54	325	290	G 2"	400

Mod	i	m	n	o	p1	p2	q
K03-MS	86	10	83	142	205	140	18
K04-MS	102	12	95	171	222	160	18
K05-MS	120	15	115	265	320	230	18
K06-MS	125	15	140	272	334	244	18

Mod	r	s	t	u	v	w	x	z
K03-MS	75	4	M6	140	180	188	106	12
K04-MS	70	4	M6	175	195	188	120	18
K05-MS	98	4	M8	200	330	285	184	19
K06-MS	85	4	M8	240	332	285	198	19

INGOMBRI
DIMENSIONS
DIMENSIONS
DIMENSIONES
ABMESSUNGEN
DIMENSÕES EXTERIORES

(K07-MS/K75-MS/K08-MS/K09-MS/K10-MS/K11-MS/K12-MS)

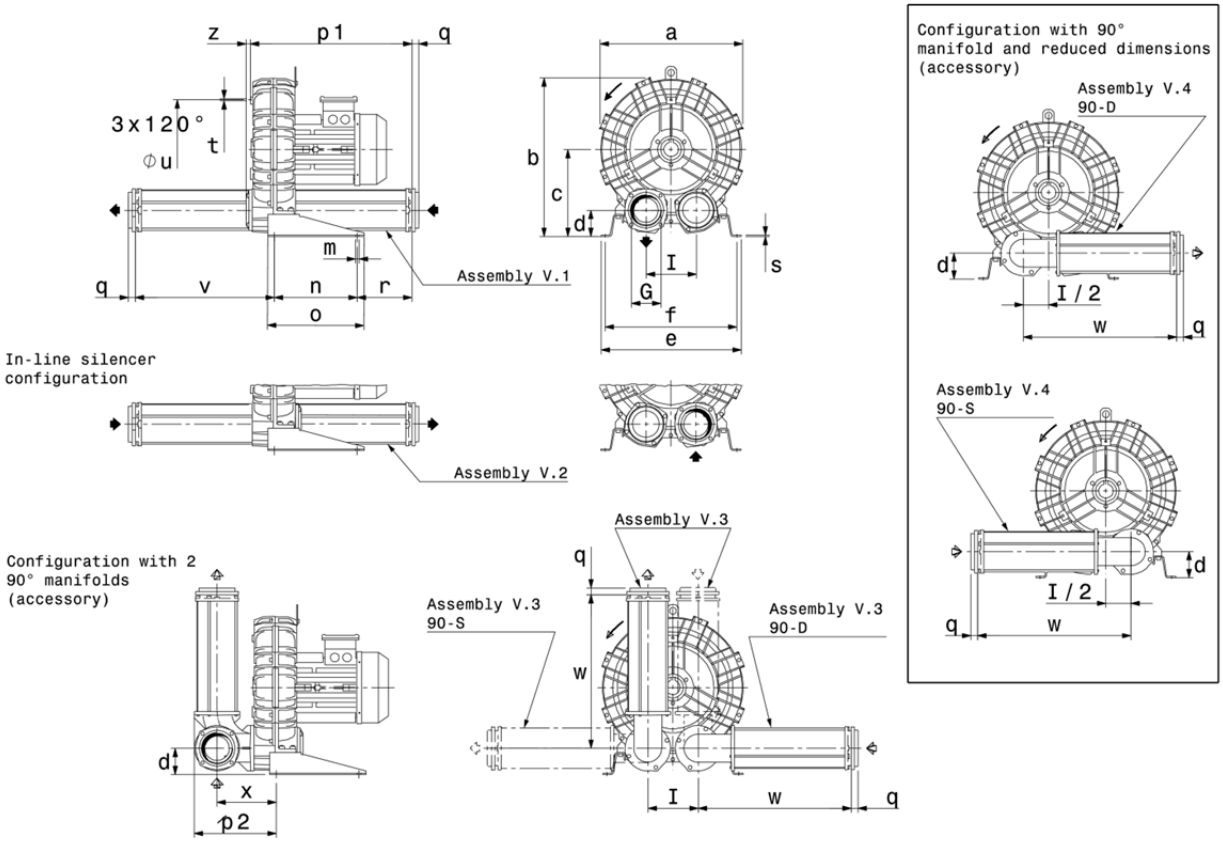

Misure in mm, Dimensions in mm, Dimensions en mm, Medidas in mm, Abmessungen in mm, Dimensões em mm

Mod	a	b	c	d	e	f	G	H
K07-MS	424	481	269	82	468	438	G 3”	445
K75-MS	424	481	269	82	468	438	G 3”	445
K08-MS	457	498	269	82	478	448	G 3”	480
K09-MS	492	561	315	96	508	478	G 4”	490
K10-MS	516	573	315	96	508	478	G 4”	490
K11-MS	542	603	332	91	540	508	G 4”	590
K12-MS	548	605	332	91	540	508	G 4”	593

Mod	i	m	n	o	p1	p2	q
K07-MS	155	13	300	350	512	255	25
K75-MS	155	13	300	350	512	255	25
K08-MS	155	13	300	350	512	255	25
K09-MS	182	13	300	350	586	300	25
K10-MS	182	13	300	350	586	300	25
K11-MS	200	13	300	350	599	305	25
K12-MS	200	13	300	350	599	305	25

Mod	r	s	t	u	v	w	x	z
K07-MS	137	5	M8	295	443	481	183	16
K75-MS	137	5	M8	295	443	481	183	16
K08-MS	137	5	M8	310	443	481	183	16
K09-MS	199	5	M8	360	505	556	215	16
K10-MS	199	5	M8	360	505	556	215	16
K11-MS	204	5	M8	390	510	556	220	16
K12-MS	204	5	M8	390	510	556	220	13

RIPOSIZIONAMENTO SILENZIATORE **(K03-MS/K04-MS/K05-MS/K06-MS)**
REPOSITIONING OF SILENCERS
REPOSITIONNEMENT DES SILENCIEUX
COLOCACIÓN DE LOS SILENCIADORES
EINBAU DER SCHALLDÄMPFER IN ANDERER POSITION
REPOSICIONAMENTO DOS SILENCIADORES

	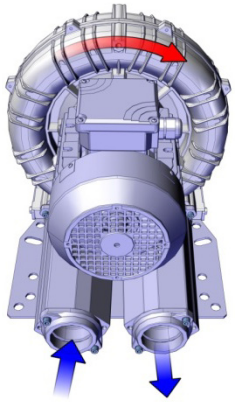 Ver. 0	
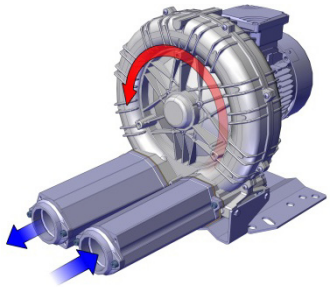 Ver. 0-A	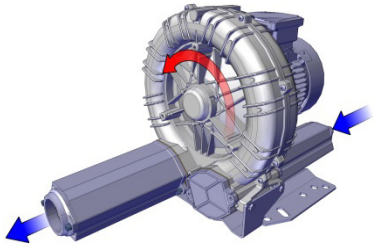 Ver. 1	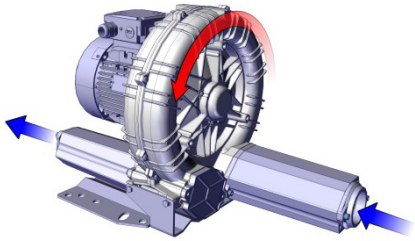 Ver. 2
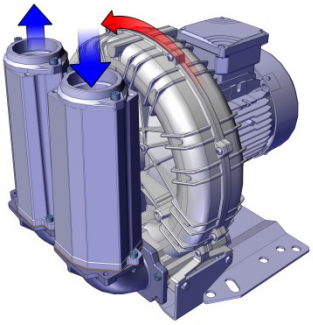 Ver. 3 - 90°DS	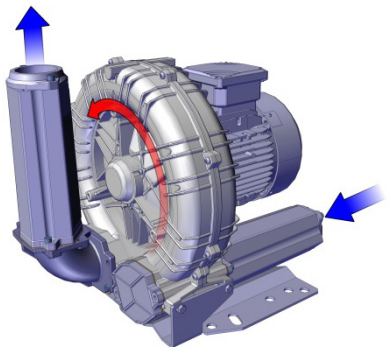 Ver. 4 - 90°D	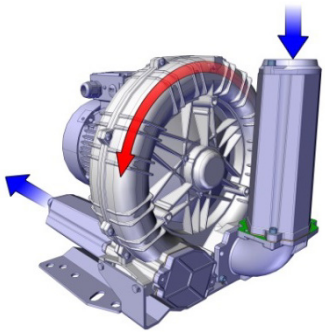 Ver. 4 - 90° S

RIPOSIZIONAMENTO SILENZIATORE (K07-MS/K75-MS/K08-MS/K09-MS/K10-MS/K11-MS/K12-MS)
REPOSITIONING OF SILENCERS
REPOSITIONNEMENT DES SILENCIEUX
COLOCACIÓN DE LOS SILENCIADORES
EINBAU DER SCHALLDÄMPFER IN ANDERER POSITION
REPOSICIONAMENTO DOS SILENCIADORES

	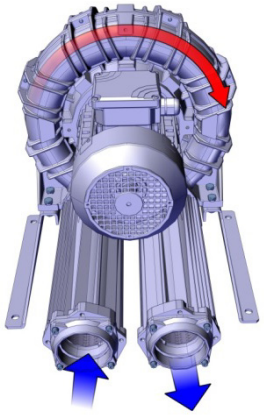 Ver.0	
Ver. 0-A	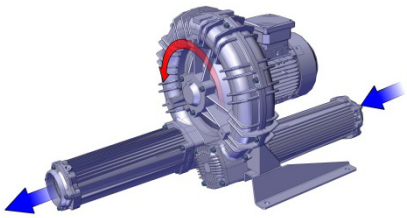 Ver. 1	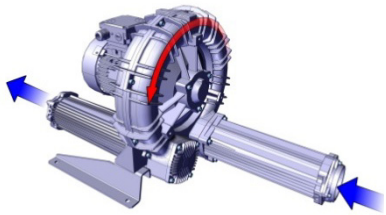 Ver. 2
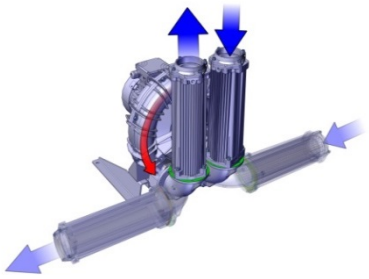 Ver. 3 - 90°DS	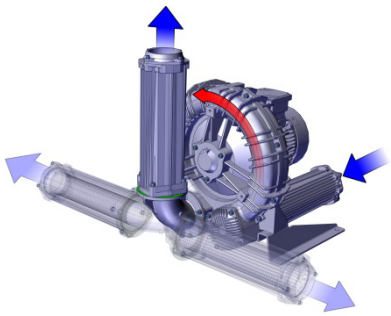 Ver. 4 - 90°D	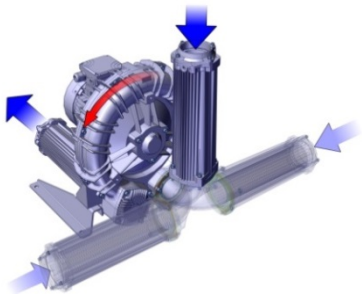 Ver. 4 - 90° S

COMPRESSORE
PRESSURE SERVICE
SOUFFLANTE
COMPRESOR
VERDICHTER
COMPRESSOR

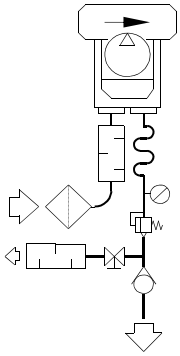

COMPRESSORE IN SERIE
SERIES PRESSURE SERVICE
SOUFFLANTE EN SÉRIE
COMPRESOR EN SERIE
SERIELL ARBEITENDER VERDICHTER
COMPRESSOR EM SÉRIE

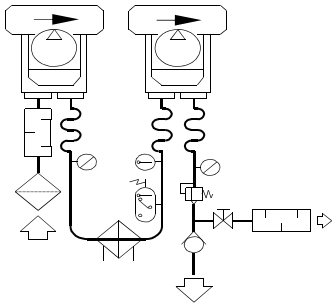

COMPRESSORE IN PARALLELO
PARALLEL PRESSURE SERVICE
SOUFFLANTE EN PARALLÉLE
COMPRESOR EN PARALELO
PARALLEL ARBEITENDER VERDICHTER
COMPRESSOR EM PARALELO

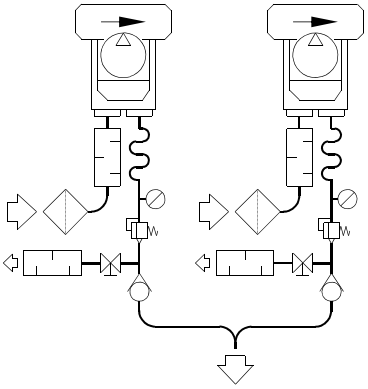

ASPIRATORE
VACUUM SERVICE
POMPE À VIDE
ASPIRADOR
VAKUUMPUMPE
ASPIRADOR

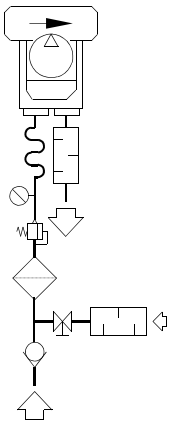

ASPIRATORE IN PARALLELO
PARALLEL VAACUM SERVICE
POMPE À VIDE EN PARALLÈLE
ASPIRADOR EN PARALELO
PARALLEL ARBEITENDER VAKUUMPUMPE
ASPIRADOR EM PARALELO

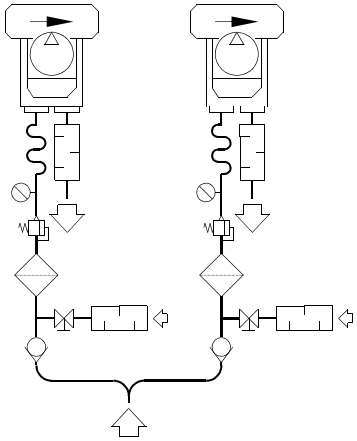

LEGENDA, KEY – ACCESSORIES, ZUBEHÖRLISTE, LÉGENDE ACCESSOIRES, TABLA DE ACCESORIOS, LEGENDA DOS ACESSÓRIOS

Item Item Composant Item Ítem Item		Denominazione Name Désignation Denominación Kennzeichnung Nome	Item Item Composant Item Ítem Item		Denominazione Name Désignation Denominación Kennzeichnung Nome
1		Filtro - Filtro in linea Filter - Inline filter Filtre - Filtre en ligne Filtro - Filtro en línea Filter – Leitungsfilter Filtro - Filtro da linha	7		Valvola di ritegno Check valve Clapet anti-retour Válvula de retención Rückschlagventil Válvula de retenção
(2)		Silenziatore Silencer Silencieux Silenciador Schalldämpfer Silenciador	8		Valvola Valve Vanne Válvula Ventil Válvula
3		Manicotto flessibile Flexible sleeve Manchon flexible Manguito flexible Flexibles Anschlussstück Luva flexível	(9)		Scambiatore Cooler Échangeur Intercambiador Wärmetauscher Permutador
4		Manometro – Vuotometro Pressure gauge - Vacuum gauge Manomètre – Vacuomètre Manómetro – Vacuómetro Manometer – Vakuummeter Manômetro – Manômetro de vácuo	(10)		Termometro Thermometer Thermomètre Termómetro Thermometer Termômetro
5		Pressostato – Vuotostato Pressure switch – Vacuum switch Pressostat – Vacuostat Presostato – Vacuóstato Druckschalter – Vakuumschalter Pressóstato – Interruptor de vácuo	(11)		Termostato Thermostat Thermostat Termostato Thermostat Termóstato
6		Valvola limitatrice Pressure relief valve Soupape de limitation Válvula limitadora Sicherheitsventil Válvula limitadora	(x) SE NECESSARIO (x) IF NECESSARY (x) SI NÉCESSAIRE (x) SI NECESARIO (x) SOFERN ERFORDERLICH (x) SE NECESSÁRIO		

8 GENERAL INFORMATION 31
8.1 PURPOSE OF THE MANUAL 31
8.2 UNIT AND MANUFACTURER'S IDENTIFICATION 31
8.3 REQUEST FOR ASSISTANCE - AFTER-SALES SERVICE 31
8.4 REPLACEMENT PARTS 31
8.5 TESTING, WARRANTY AND LIABILITY 32
9 SAFETY RULES 32
9.1 GENERAL NOTES ON SAFETY AND FOR THE USER 32
9.2 CONDITIONS OF INSTALLATION AND NORMAL OPERATION 33
9.3 FAULT CONDITION AND MAINTENANCE 33
9.4 RESIDUAL RISKS 34
10 FORESEEN USE 34
10.1 CONDITIONS OF USE 34
10.2 SPECIAL VERSIONS 35
10.3 PROHIBITIONS 36
10.4 REASONABLY FORESEEABLE IMPROPER USE 36
11 STORAGE AND TRANSPORT 37
12 INSTALLATION 38
12.1 INSTALLATION CONDITIONS 38
12.2 HORIZONTAL INSTALLATION 39
12.3 INSTRUCTIONS FOR REPOSITIONING SILENCER HOUSINGS 39
12.3.1 CK TYPE 90° MANIFOLD (accessory) USE 40
12.4 VERTICAL INSTALLATION ON THE COVER 40
12.5 ELECTRIC MOTOR 41
12.5.1 CONNECTION 41
12.5.2 INVERTER POWERED ELECTRIC MOTOR 42
12.5.3 ROTATION DIRECTION 42
13 STARTUP 42
13.1 PRELIMINARY CHECKS 43
13.2 OPERATION 43
13.3 STOPPING 43
14 MAINTENANCE 43
14.1 PERIODICAL CHECKS 43
14.2 PERIODICAL MAINTENANCE AND TROUBLESHOOTING 44
14.3 REPLACING THE SOUND ABSORBING MATERIAL 45
14.4 INTERNAL CLEANING 45
14.5 LIFE OF BEARINGS 45
14.6 OPERATION PROBLEMS 46

8 GENERAL INFORMATION

8.1 PURPOSE OF THE MANUAL

- The purpose of the manual is to provide the operator and maintenance personnel with "instructions for use" to prevent and minimise risks during the interaction of man and unit.
- The information was prepared by the manufacturer in the original language (ITALIAN) according to the principles of professional writing and in compliance with the applicable regulations.
- To facilitate its reading and understanding, the principles of communication best suited to the characteristics of the recipients have been adopted as far as possible.
- Keep the manual and enclosed documentation for the entire service life of the unit in a known and easy to access place so that it is always at hand for reference.
- To easily find specific information, see the table of contents.
- Any observations made by recipients can be an important contribution to improving the after-sales services provided by the manufacturer.
- Some information may not entirely match the actual configuration of the work unit delivered.
- Some parts of the text, or those of considerable importance, are indicated by symbols, whose meaning is described:

	These are generic or specific **DANGER** symbols and indicate hazards that can cause even serious **accidents to people** if the required precautions are not taken.
	This is the **PROHIBITED** symbol and indicates operations that must not be carried out because they can result in even serious **accidents to people**.
ATTENTION	The word ATTENTION is used to provide additional information and in particular to point out hazards that can cause **serious damage**.
NOTES FOR THE USER	NOTES are used to provide information allowing the user to make best use of the unit, with best performance, and for safety and respecting the environment.

8.2 UNIT AND MANUFACTURER'S IDENTIFICATION

The nameplate gives all the unit's identification details, which should always appear in all correspondence between the user and manufacturer (e.g. requests for assistance or for replacement parts as described in par. 1.3).
The nameplate is placed on the machine:

It is strictly forbidden to remove or tamper with the nameplate.

8.3 REQUEST FOR ASSISTANCE - AFTER-SALES SERVICE

All requests for After-Sales Service intervention must be sent to the following email address:

- customercare@fpz.com

Specifying:

- Type of unit;
- Serial no.;
- Defect found;
- Use the RMA form enclosed with this manual

8.4 REPLACEMENT PARTS

All requests regarding replacement parts must be sent to the following email address:

- customercare@fpz.com

Specifying:

- Type of unit;
- Serial no.;

- Code of part to be ordered;
- Required quantity;
- Means of shipment;

8.5 TESTING, WARRANTY AND LIABILITY

Testing and inspection

- The entire unit is sent to the customer prearranged for installation, after passing the tests and inspections required by the manufacturer, in conformity with the applicable laws.

Warranty

- Warranties are defined in the general terms and conditions of sale.

Liability

- **FPZ S.p.A.** cannot be held liable for operation faults or generic failures caused by improper use of the unit or operations carried out by persons not authorised by **FPZ S.p.A.**

9 SAFETY RULES

9.1 GENERAL NOTES ON SAFETY AND FOR THE USER

The instructions listed below must be read carefully and become a fundamental part of daily procedures in the use and maintenance of all the equipment, in order to prevent any kind of accident, injury or damage.

- Do not start the unit until its operation is clearly understood.
- If any doubts arise, despite having read this manual carefully and completely, contact **FPZ S.p.A.**
- Make sure all personnel involved in the use of the unit are informed regarding the safety requirements.
- Before starting the unit, the operator must check the efficiency of the safety devices and for any obvious defects in the unit. In case of any defects, immediately notify **FPZ S.p.A.**
- Check the proper operation of all the safety devices every day.
- The safety devices must never be removed or disabled.
- During maintenance or repair work it may be necessary to exclude some safety devices from the service. This operation must be carried out by authorised personnel.
- Never attempt rash solutions.
- All installation, commissioning and maintenance operations must be carried out exclusively by **qualified personnel**.
- Do not modify the electrical connections on the unit.
- Do not wear clothes, jewellery or accessories that can get caught in moving parts.
- Always keep the area around the unit free of obstructions.
- Use appropriate **PPE** such as boots, gloves, goggles and work clothes.
- Pay attention to all danger and caution signs placed on the unit.
- Always apply and enforce the safety rules; in case of any doubts, always consult this manual before acting.
- The unit must be used only and exclusively for its intended purpose and in accordance with that contractually established with **FPZ S.p.A.**

Non-compliance with the unit's intended use can cause serious accidents

The unit must only be started:

- In conformity with the purposes of use, transport and handling specified in "FORESEEN USE",
- respecting the values given in the "SPECIFICATIONS" and RATING DATA.

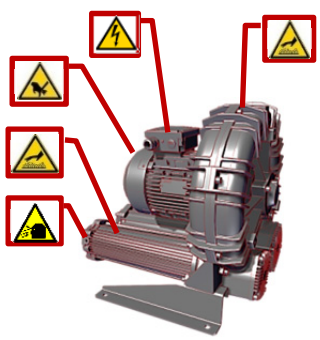

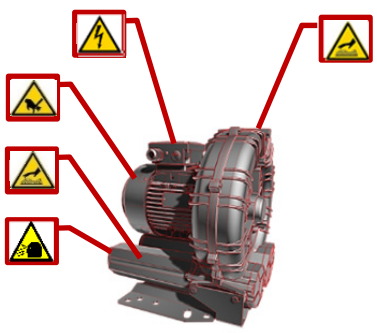

9.2 CONDITIONS OF INSTALLATION AND NORMAL OPERATION

Startup and operation must occur only under the following conditions:

- The unit must be completely assembled and intact, i.e. not damaged or tampered with.
- The silencer must be properly connected to the system piping.
- The machine must be securely fixed in place.
- The motor must be connected to a suitable control panel.
- If installed outdoors, protect the unit against the sun and weather.

Risk of injury due to shearing, crushing, entanglement!

During work on the unit there are risks of injury due to shearing, crushing or entanglement!
Therefore it must be carried out by technicians who handle and install the machine, taking the necessary safety measures and following the instructions given in this manual.

Danger due to escaping process fluids!

Danger due to overpressure with sudden release of process fluids (injury to the skin and eyes)!
Start the machine only if properly connected.

Danger due to electricity!

Improper behaviour can cause serious accidents!
Work on the electrical equipment must only be carried out by qualified and authorised electricians!
Before starting work on the unit or system, take the following precautions:

- disconnect the mains power;
- open the terminal box only after making sure the power is disconnected;
- take steps to prevent the power from being reconnected.

Danger of suction!

Danger due to negative pressure: sudden drawing in of hair and clothing! Start the machine only if properly connected.

Danger due to seizing of the impeller caused by performance values being exceeded

Use the blower, making sure the operating conditions comply with the values given in the SPECIFICATIONS.
Never operate the unit even temporarily with the inlet and/or outlet port closed.
Install a pressure-relief valve or equivalent circuit that can prevent excessive vacuum and/or overpressure and that enables compliance with the values given in the SPECIFICATIONS in this manual and the RATING DATA.
Turn the unit off immediately in case of any abnormal impeller noise! Then schedule maintenance.

Danger of burns caused by contact with hot surfaces of the unit!

In operation, in conformity with the values given in the "SPECIFICATIONS" and RATING DATA, the blowers / exhausters can reach high surface temperatures.
Use suitable PPE against the risk of burns. (Also see the section residual risks.)

9.3 FAULT CONDITION AND MAINTENANCE

Before starting routine maintenance on the unit, or for a fault, take the following safety measures:

- Disconnect the unit from the power supply via the main the switch.
- Place a sign: “DANGER! Maintenance work in progress." on the system control and the unit's control elements.
- **Allow the unit to cool**!
- Wait until the unit has completely stopped, i.e. that **the impeller is not rotating**, checking the electric motor fan.
- Ensure the absence of vacuum or overpressure in the unit and in the piping to be disconnected and that no fluid can escape from the unit and/or system!
- Follow the maintenance instructions in this manual.

Danger due to rotating impellers: cutting or shearing.

The rotating impeller can be accessed through the openings of the body and cover of the machine, once the manifolds or blind flanges are removed!
Never put hands or anything through these openings.

Danger due to electricity!

Improper behaviour can cause serious accidents!
Work on the electrical equipment must only be carried out by qualified and authorised electricians!
Before starting work on the unit or system, take the following precautions:

- disconnect the mains power;
- take steps to prevent the power from being reconnected;
- open the terminal box only after making sure the power is disconnected.

9.4 RESIDUAL RISKS

When designing the machines or systems on which the blower is to be installed, the following residual risks must be considered.

Danger due to hot surfaces!

In operation the unit may overheat, exposing the operator to contact with hot surfaces.
Do not touch the unit when in operation.
Before carrying out any operation after shutdown allow the unit to cool by waiting at least 20 minutes.

Danger due to rotating parts: electric motor cooling fan.

Although designed to reduce any danger, the machine has residual risks linked to the rotation of the fan.
Precautions to be taken:

- Do not wear loose fitting clothes
- Do not go near the machine with long and loose hair

Danger due to noise from the unit!

Some machines can produce high noise levels, even exceeding 80 dB(A).
The reference values are given in the specifications, which do not consider environmental reverberation.
Precautions to be taken:
Check the actual sound pressure of the machine in the place, and if necessary:

- Report the foreseen noise risk
- Arrange the use of PPE
- Insulate the place

10 FORESEEN USE

- FPZ side channel blowers / exhausters are designed to generate vacuum and overpressure and for conveying non-explosive, non-flammable, non-toxic and non-aggressive gases and air in continuous duty in a non-explosive environment.
- They consist of a toroidal chamber; between the body and cover there is an impeller with radial peripheral blades.
- FPZ side channel blowers / exhausters are designed and built for use in industrial plants and are equipped with three-phase or single-phase asynchronous bipolar electric motors in compliance with IEC 60034-1.

10.1 CONDITIONS OF USE

Non-compliance with the unit's intended use can cause serious accidents.

- This manual:
  MUST be read carefully and understood before carrying out any operations on the unit;
  MUST be strictly complied with;
  MUST always be at hand in the place where the unit is used.
- Installation must only be carried out by qualified personnel.

ATTENTION!	If installation is outdoors, protect the unit from the sun.

If installation is outdoors, protect the unit from the sun.
The maximum permissible pressure differentials given in the "SPECIFICATIONS" must never be exceeded. They are valid only under the following conditions;

- as a blower:
  gas intake temperature 20°C (+68°F) and atmospheric pressure 1013 mbar (abs.) (29.92 In Hg) measured at the inlet port
- as an exhauster:
  gas intake temperature 20°C (+68°F) measured at the inlet port and atmospheric backpressure 1013 mbar (abs.) (29.92 In Hg).

The ambient **temperature**, and the conveyed gas intake temperature, is permissible inside the range -15°C (+5°F) ÷ +40°C (+104°F) with the following provisions;

- for ambient temperature +30°C (+86°F) **reduce** the maximum pressure differentials given in the "SPECIFICATIONS" by 5%;
- for ambient temperature +40°C (+104°F) **reduce** the maximum pressure differentials given in the "SPECIFICATIONS" by 10%.

The graph to be used to reduce the maximum pressure differentials in case of ambient temperature between +21°C and +40°C (+70°F and +104°F) is given below

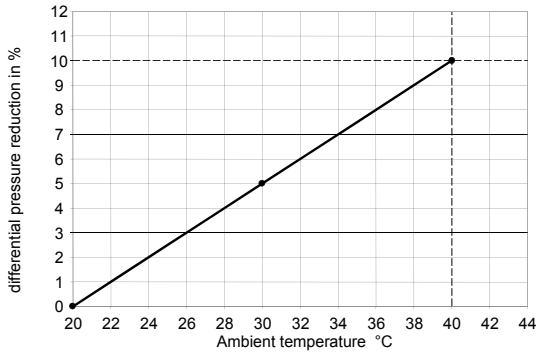

The unit should not be installed at more than 1000m a.s.l.; if higher, contact the FPZ after-sales service.

Danger due to limited visibility in the place where the unit is installed!

Make sure to always have the installed unit under control when carrying out any operation in the installation area.
The control elements must be placed so that the installed unit can be seen.
Danger of serious injury!

ATTENTION!	If the flow rate has to be reduced, use a bypass valve instead of throttling the suction or delivery.

- In case of suction in the place, and if on the system, protect the intake pipe using a suitable **filter** with maximum filtration of 100µm and check compliance with the maximum pressure/vacuum data given in the SPECIFICATIONS (max ΔP) :
- for use as a **blower** deduct the pressure loss (P_a) from the maximum compression indicated (max ΔP), i.e. $P_{working} \approx$ max ΔP - P_a (for $T_{ambient}$=20°C and $P_{ambient}$=1013 mbar)
- for use as an **exhauster** make sure the maximum vacuum at the inlet port is not exceeded.

10.2 SPECIAL VERSIONS

FPZ side channel blowers/exhausters can be manufactured in special or custom versions; the instructions given in this manual still apply to some of them.
The special versions manufactured, and for which that given above applies, are:

- **BPA version**
  Machines built to work in harsh environments and/or for conveying aggressive fluids, where aggressive means the presence of elements that can affect standard machine operation, such as humidity; as specified in point 2, conveying flammable, explosive or toxic gases, or installation in potentially explosive places, is not permitted.
- **TMS version**
  Machines that ensure mechanical seal between the parts that convey air or fluids, minimising leakage.
- **Special electric motors**
  On request, blowers/exhausters can be manufactured with motors having one or more of the following characteristics:
  - Special voltages
  - Higher levels of protection against solid bodies and/or liquids (standard IP55)
  - Higher insulation classes (standard Class F)
  - Protection devices such as thermal switches, heaters, PTC, PT100
- **IE2 motor**
  The side channel blowers/exhausters can be manufactured using class IE2 motors.
  Compared to the standard version, the performance and dimensions may vary; this information is given more precisely in the specific Data Sheets of the IE2 version.

Further customisation must be requested and agreed when ordering, subject to a feasibility appraisal by the Technical Department.

ATTENTION!	For maintenance of special version machines, contact FPZ.

10.3 PROHIBITIONS

THE FOLLOWING IS STRICTLY PROHIBITED:

- Using the unit in installations for unforeseen use.
- The suction and conveying of aggressive, corrosive and/or harmful fluids.
- Using the unit in conditions different from the values given in the "SPECIFICATIONS" and RATING DATA.
- Using the unit without having installed the suction filter.
- Operation with inlet and/or outlet port closed.
- Making conversions or changes to the unit, maintenance or repair work on own initiative or not envisaged in the manual. Maintenance work can be carried out only in compliance with that described in this user manual, exclusively by qualified personnel.

IT IS COMPULSORY TO:
- Check and comply with the intended use of the machine.
- Check and comply with the conditions of use specified in this manual.
- Comply with the installation conditions specified in this manual.
- Carry out the preliminary checks as specified in the section "STARTUP".
- Carry out maintenance as specified in section 7.

10.4 REASONABLY FORESEEABLE IMPROPER USE

Non-compliance with the unit's intended use can cause serious accidents.

Failure to comply with the prohibitions/obligations can result in technical faults, damage to the system or accidents.
Danger of serious injury!

- Listed below are some examples of improper use identified by risk analysis and practical experience, according to the conditions they can create.

IMPROPER USE	CONSEQUENCES	RISKS
IMPROPER USE LINKED TO NORMAL OPERATION		
Failure to comply with the distance for the motor air intake	Motor overheating and possible damage to the blower	RISK FOR THE MACHINE
Presence of operators and possible contact with the machine	Operator coming into contact with hot parts of the machine	RISK FOR THE OPERATOR
Use of loose clothing or untied long hair	Possible catching or suction in the machine or in the motor fan	RISK FOR THE OPERATOR
IMPROPER USE LINKED TO METHODS OF USE		
Failure to comply with the operating conditions (par. 2.2): - Ambient temperature outside the limits or incorrect - Altitude above 1000 m - Failure to consider system and filter pressure losses	Machine performance different from the data given, possible motor faults and seizing of the impeller	RISK FOR THE MACHINE
Failure to install the filter (for use with suction in the place)	Particles entering the blower with seizing of the impeller	RISK FOR THE MACHINE
Operation outside curve (P/Q) (Pressure /Flow rate)	Machine performance different from the data given, possible motor faults and seizing of the impeller	RISK FOR THE MACHINE, SYSTEMS AND OPERATORS
Rigid connection between the machine and system	Abnormal vibrations for the machine and/or system with possible seizing of the impeller.	RISK FOR THE MACHINE, SYSTEMS AND OPERATORS

Use of the unit with current values not corresponding to nominal	Possible overheating of the machine and motor when powered by an inverter.	RISK FOR THE MACHINE
IMPROPER USE LINKED TO MAINTENANCE WORK		
Failure to clean the filter	Seizing of the impeller	RISK FOR THE MACHINE
Failure to eliminate of layers of surface dust	Machine overheating	RISK FOR THE MACHINE, SYSTEMS AND OPERATORS
FAULT CONDITIONS / EMERGENCY CONDITIONS		
Not stopping the machine when making an abnormal noise.	Damage with possible seizing of the impeller, machine overheating and possible motor damage.	RISK FOR THE MACHINE, SYSTEMS AND OPERATORS

11 STORAGE AND TRANSPORT

Danger due to suspended loads.

The tipping over or falling of heavy loads can cause crushing and injury Place the packages in a stable way.
Do not place loads on the packages.

- Store the machine in a dry place, if possible keeping it in its packaging.
- Do not remove the protection from the openings.

Danger due to lifting of heavy loads!

The falling of heavy loads can cause crushing and injury or even death!
Before carrying out handling operations (lifting, moving, carrying, storage) check the weight, or mass (m), of the unit given in the "SPECIFICATIONS" and decide the most suitable method in order to ensure maximum safety.
Therefore, all the risk prevention measures must be met, including any local and/or particular regulations on safe handling:

- by suitably qualified and adequately instructed personnel;
- using appropriate means;
- organising the work so that it is done with minimum risk and in safe and healthy conditions;
- with a safe and stable support surface;
- with the use of suitable work clothes and personal protection equipment (gloves and goggles, safety shoes and helmet);
- on a work area with sufficient space, flat floors, without obstacles;
- avoiding knocking, jerking and jolting.

Units weighting more than 25 kg have lugs for handling.

Different packaging is used, depending on the size and weight; once the package is brought near the installation area, open it, take out the documents and then remove the machine as illustrated below.

m<25 kg

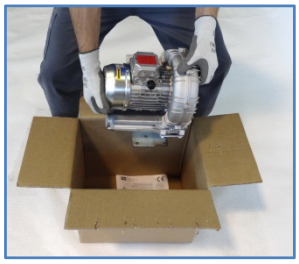

ATTENTION!

Lifting the unit in any way other than that indicated is strictly prohibited. Use the special lugs on the body of the blower, motor or base

m>25 kg

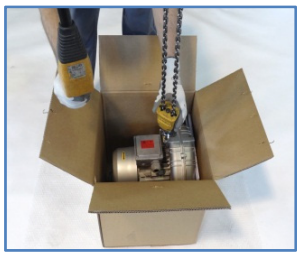
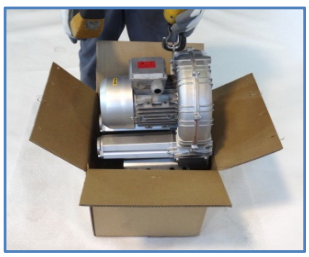

m>25 kg

m>25 kg

- In some cases the lifting eye is turned 90°.
- Before lifting the machine, proceed as follows:
- Undo the screw
- Put the lifting eye back in the correct position
- Tighten the screw

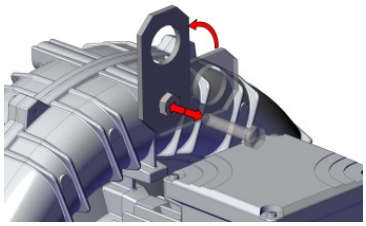

12 INSTALLATION

12.1 INSTALLATION CONDITIONS

- Make sure the conditions of use as described in section 3 are complied with, then proceed with installation of the machine as specified below.

Danger due to limited visibility in the place where the unit is installed!

Make sure to always keep an eye on the installed unit when carrying out any operation in the installation area.
The control elements must be placed so that the installed unit can be seen.

Danger due to vibration!

Regularly check the fixing of the unit to the support structure.
Excessive vibration of the unit can seriously damage the machine.

NOTE FOR THE USER

Vibration dampers are supplied with machines from K07 to K12.
On request, vibration dampers are also available on the other machines.

- The unit's support surface must be flat, sturdy, stable and as level as possible.
- The unit must be installed on a structure that does not transmit vibrations. Do not install the unit on structures that can transmit or amplify the noise.
- Installation of the unit must always be done using vibration dampers.
- Installation of the unit must ensure that motor ventilation is not impeded by obstacles placed in the immediate vicinity. Therefore, the motor air intake must remain free, ensuring a distance of at least 50mm between the motor fan cover and any structure.

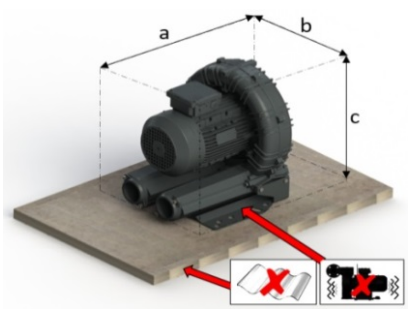

- Connect the pipes using flexible sleeves, without resting the weight of the pipes on the unit, with the exception of a possible filter in case of suction in the place.
- Determine the dimensions a, b, c to allow adequate space for installation of the unit with its accessories (Dimensions available in the first section).

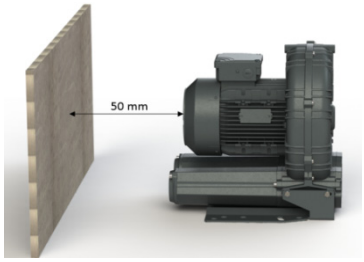

ATTENTION!	When installed outdoors, protect the unit against the sun and weather.

To avoid overloads caused by pressure fluctuations, install a bypass pressure-relief valve on the suction pipe in case of operation as an exhauster, and on the delivery when operating as a blower.

If the flow rate has to be reduced, use a bypass valve instead of throttling the suction or delivery.

Protect the suction pipe with a suitable filter with degree of filtration less than or equal to 100 µm. Foreign bodies are: dust, sand, gravel, dirt in the pipes, cutting burrs and shavings, welding slag and spatter, metal burrs and sealant residuals produced when connecting the pipes. Replace the filters regularly!

Size the pipes and choose accessories that minimise pressure losses; therefore:

- do not fit pipes narrower than the ports of the machine.
- when installing several machines in parallel, suitably size the manifold and the main line.
- use large-radius curves and not elbows.
- do not install valves with a smaller flow than nominal and check valves with shutter opposed by spring (the check valve with lowest pressure loss is the lightened non-return valve).
- when used for oxygenation, choose diffusers with low flow resistance (low pressure loss).

Danger due to foreign bodies and dirt entering the unit!

The ingress of even tiny foreign bodies causes serious damage to the unit with probable breakage of the impeller blades and the danger of debris being thrown out!

See INSTALLATION DIAGRAMS in the first section.

12.2 HORIZONTAL INSTALLATION

- Units supplied with standard set-up are ready to be installed in the horizontal position by means of the feet.
- The feet have holes for fixing; use all the holes and choose the appropriate type of screw.
- Remove the protection on the ports before checking the rotation direction and before final connection.
- To connect the unit to the piping, remove the flanges from the silencer housings to make the appropriate connections using flexible sleeves, thereby avoiding rigid connections which can cause stress and harmful vibrations.
- Refit the flanges on the silencer housings complete with gaskets and tighten.

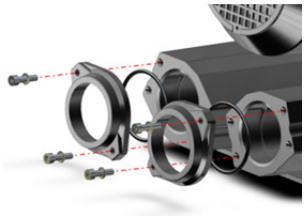

Check the motor rotation direction (see par. 5.2 ROTATION DIRECTION)

12.3 INSTRUCTIONS FOR REPOSITIONING SILENCER HOUSINGS

- The SCL K MOR series has been designed for maximum flexibility in positioning the silencer housings in order to allow different installation configurations.
- The blower is normally supplied with silencers positioned as shown in figure **A**.
- If this arrangement has to be changed, establish the required arrangement of the silencer housings.

See the diagram provided in the first section of this manual

- Remove and refit the housings and blind flanges according to the following diagram to obtain the desired configuration

Removing the blind flange (B)
- Place the unit horizontal, resting the feet on a flat and stable surface.
- Undo the screws and remove the blind flange and gasket

Removing the silencer housing (C)
- Undo the screws.
- Remove the silencer housing with gasket.

Removing the flange (D)
- Undo the screws.
- Remove the flange and gasket.
- Reassemble by proceeding in reverse order, remembering the gaskets.

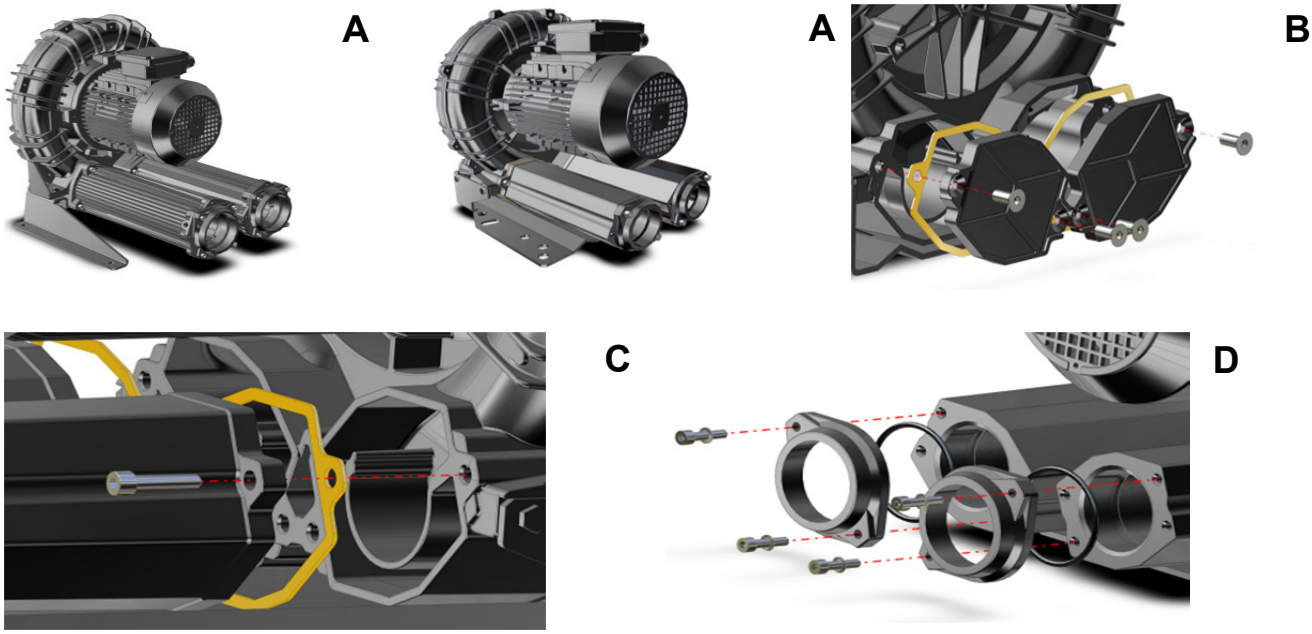

Danger due to rotating parts: impeller!

The danger of shearing due to the rotating impeller can exist even when the machine off, if it is started manually.
Therefore use suitable work clothes and personal protection equipment.

12.3.1 CK TYPE 90° MANIFOLD (accessory) USE

- For different connection configurations, use the CK type 90° manifold installed only on the cover openings.
- See the possible configurations as previously illustrated.

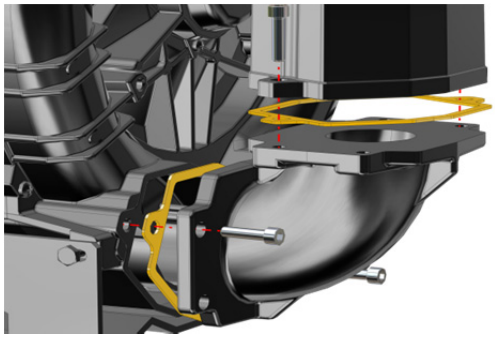

Fitting the CK type 90° manifold
- Remove the silencer as previously described.
- Insert the gaskets between the cover and manifold.
- Tighten the respective screws
- Assemble the silencer by proceeding in reverse order.

See par. 5.1 for INSTALLATION CONDITIONS

12.4 VERTICAL INSTALLATION ON THE COVER

The units can be installed with the working axis vertical, as follows:

- Using vibration dampers fitted directly on the cover (E)
- Using a special foot for vertical fixing, available as an accessory (F).

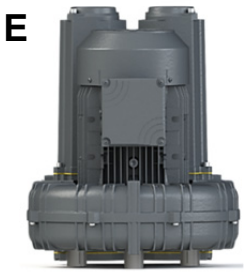

Non-compliance with the unit's intended use can cause serious injury.

Regularly check the fixing of the unit to the support structure.
Excessive vibration of the unit can seriously damage the machine.

NOTE FOR THE USER	A special foot is available as an accessory for fixing the unit vertically on the cover. The foot has holes for fixing; use all the holes and choose the appropriate type of screw.

NOTE FOR THE USER	Vibration dampers are supplied with machines from K07 to K12. On request, vibration dampers are also available on the other machines.

ATTENTION!	Avoid the possibility of water stagnation, especially in case of installation of the unit with vertical axis.

ATTENTION!	Check the motor rotation direction. (see par. 5.2 ROTATION DIRECTION)

12.5 ELECTRIC MOTOR

Make sure to comply with all the safety measures and instructions given in the electric motor instruction manual.

Danger due to electricity!

- Improper behaviour can cause serious injury.
- Work on the electrical equipment (installation, maintenance) must only be carried out by qualified and authorised electricians!
- Before starting work on the unit or system, take the following precautions:
  - make sure the machine is NOT powered;
  - take steps to prevent the power from being reconnected;
  - open the terminal box only after making sure the power is disconnected!
- The terminal box must not contain:
  - foreign bodies;
  - impurities;
  - moisture.

Close the terminal box with the lid and seal the openings of the cable glands to prevent dust, water and moisture from entering.
Check the seals regularly.

- If a faulty unit is touched there is risk of electric shock!

Install the motor circuit breaker.
Have an electrician regularly check the electrical equipment.

ATTENTION!

In case of various motor starts in the space of an hour, there are limitations which can seriously damage the unit if ignored.
Regarding this, refer to the electric motor instruction manual.

12.5.1 CONNECTION

ATTENTION!

Incorrect connection of the motor can seriously damage the unit.
The power supply of the motor and any auxiliary equipment must use wires of suitable thickness in order to avoid abnormal overheating and high voltage drops.

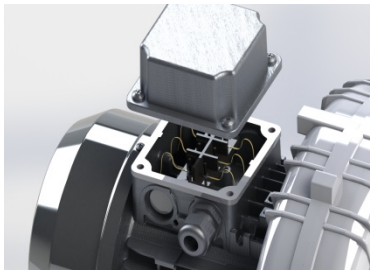

- Make sure the supply voltage and frequency match the rating data.
- Connect the earth wire of the motor to the terminal marked with the following symbol ⏚ always before connecting to the mains and check the leakage capacity. The earth wire is identified by its colour (yellow/green).
- Connect to the mains by referring to the diagram in the terminal box.
- Use the openings in the cable glands to run the power cables inside the terminal box.
- Once the terminal board connections are done, tighten the cable gland to secure the cables.
- The electrical connection terminals must be tightened to prevent high contact resistances and consequent overheating.
- Ensure the insulation gaps and distances between the different wires as required by the standards.
- All screws used for closing the terminal board must be tightened down. Damaged screws must be immediately replaced with screws of equivalent or better quality.

The connection must ensure:

- lasting safety over time.
- The ends of the wires must not protrude.
- The fuses only protect against short circuits and not the motor.
- Fuse ratings must take account of peak currents, especially in case of direct starting.
- The protection with motor circuit breaker (thermal or amperometric) is essential against the risks of overload, in the absence of a mains phase, excessive voltage fluctuation or stuck rotor.
- Adjust the motor circuit breaker to the rated current as the maximum value.

12.5.2 INVERTER POWERED ELECTRIC MOTOR

ATTENTION!

When powered by an inverter, the unit's nominal pressure or vacuum characteristics cannot be maintained.
For the performance of an inverter powered unit, contact the FPZ after-sales service.

The power supply via inverter is always the responsibility of the installer, who must ensure compliance with the standards and:

- checking and any measures necessary to comply with the limits of immunity and emission laid down by the standards;
- checking the suitability of the system and the inverter for operation with standard motors, i.e. class F, or the need for specific motors for these types of operation.

12.5.3 ROTATION DIRECTION

SCL K blowers - exhausters must be used with the rotation direction indicated by the arrow on the electric motor fan cover.

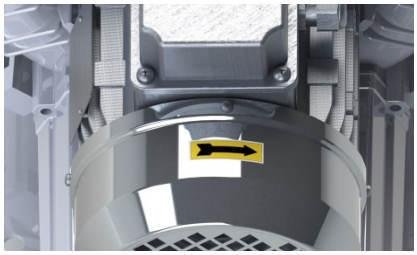

- To check the rotation direction, switch the motor on briefly and observe the fan.
- To change the rotation direction, invert the power cable connections, leaving the earth connection unchanged.

Refer to the connection diagram located in the terminal box

ATTENTION!

The position of the motor does not always allow the rotation direction to be checked, therefore it is advisable to do this check before installation of the system.

13 STARTUP

Non-compliance with the unit's intended use can cause serious accidents.

The unit must only be started:

- after carefully reading, understanding and complying with this user manual ("SAFETY RULES" and "INSTALLATION");
- in conformity with its intended use as prescribed in "FORESEEN USE";
- respecting the values given in the "SPECIFICATIONS".

13.1 PRELIMINARY CHECKS

Before starting the machine for use, carry out the following preliminary checks:

- If the unit has not been started up for some time, check its condition and, if necessary, remove any dust from the external surfaces;
- Deactivate/open any pipe closing devices (shut-off valves, solenoid valves, etc.) before starting the unit.
- **Never start and operate the unit with the inlet and/or outlet port closed!**
- Make sure the ambient and conveyed gas suction temperatures come within the values: -15°C (+5°F)÷ +40°C (+104°F);
- Check correct operation of the pressure-relief valve (not supplied).

13.2 OPERATION

The unit can be started for use after carrying out the preliminary checks.

- Start the unit by switching on the power to the electric motor.
- Check the operating pressure or vacuum and also compliance with the values given in the “SPECIFICATIONS”. Pressure losses in the pipes are often underestimated but are decisive factors for the operating differential pressure.
- Measure the motor absorption and check compliance with the rated value.

13.3 STOPPING

- The unit must be stopped by switching off the power supply to the motor.
- In case of shutdown, make sure to operate the unit with the inlet open for about 20 minutes.
  This operation allows the removal any condensate in the suction chamber.

14 MAINTENANCE

In order to prevent faults and damage it is important to periodically check the units in operation, therefore it is advisable to adopt a maintenance plan in line with this Manual, providing for:

- Periodical checks
- Periodical maintenance and troubleshooting

14.1 PERIODICAL CHECKS

The units in operation should undergo periodical inspections by qualified personnel, in order to prevent failures that can directly or indirectly cause damage.

A) With the unit in operation periodically check the following parameters:

- Delivery temperature
- Operating pressure and/or vacuum
- Electric motor current absorption
- Vibration
- State of the filter and corresponding pressure loss

Danger of burns caused by contact with hot surfaces of the unit!!

When in operation the blowers / exhausters can reach high surface temperatures.
Before carrying out any operation after shutdown wait at least 20 minutes for the unit to cool.

Measurement of vibrations

The measurements for determining the vibration velocity [mm/s] must be done with an electronic vibration meter, at the following places:

- **Points P1** and **P2 (front bearing):** place the vibration meter near the front bearing, adopting the highest value.
- **Points P3** and **P4 (rear bearing):** place the vibration meter on the electric motor casing near the bearing housing (not on the fan cover), adopting the highest value.

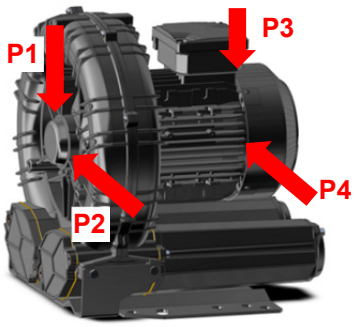

Legend: Classification of machines: ***Class I*** **= SCL with electric motor of power ≤ 15kW** ***Class II*** **= SCL with electric motor of power > 15kW** **Appraisal zones:** ***Zone A*** **= SCL with vibration (a) inside this zone they are considered acceptable for a long-term duty.** ***Zone B*** **= SCL vibration (a) inside this zone they are considered unsuitable for a continuous long-term duty. The machine can be operated in these conditions for a limited period, as long as there is the opportunity for a suitable corrective action.**	**Effective vibration velocity value [mm/s]**	***Class I*** **(≤ 15kW)**		**Effective vibration velocity value [mm/s]**	***Class II*** **(>15kW)**
	a<1.8	***A***		a<2.8	***A***
	1.8<a<4.5	***B***		2.8<a<7.1	***B***

Danger due to seizing of the impeller caused by excessive vibration!

Vibration values higher than Zone B (table of effective vibration velocity value) are considered NOT permissible and can cause damage to the machine and therefore serious injury to operators.

- **In case of noise and/or abnormal vibration indicating the possibility of seizing of the impeller, move away and turn the unit off immediately!**

Variations in normal working conditions (increases in power absorption, abnormal noise, vibration, excessive overheating of the service fluid) are indications of a unit malfunction.
Also, compare the measured values with those given in the "SPECIFICATIONS.

B) With the unit stopped and cooled, periodically carry out the following checks:

- Dust: check and remove deposits from the external surfaces of the unit.
- Suction filter (if fitted): every 10-15 days, check and clean or replace the filter cartridge. The dirty cartridge will create strong suction resistance and consequently a higher pressure differential, power absorption and operating temperature.

Danger due to high temperatures!

To limit the formation of surface layers of dust that can affect the natural heat exchange between the unit and the environment, ensure regular cleaning and removal with suitable equipment.
The suction and/or delivery pipes must not be dirty or clogged! Wear suitable PPE.

14.2 PERIODICAL MAINTENANCE AND TROUBLESHOOTING

Refer to the following section, "OPERATION PROBLEMS", to identify possible critical situations and types of failures.

- In case of periodical maintenance for cleaning and replacement of some components, as well as in case of failure, it is necessary to disconnect and remove the machine from the system.

Danger due to electricity.

Before carrying out any operation, make sure the machine is NOT powered.

Risk of injury due to shearing, crushing, entanglement.

During work on the unit there are risks of injury due to shearing, crushing or entanglement!
Therefore it must be carried out by qualified personnel who handle and install the machine, taking the necessary safety measures and following the instructions given in this manual.

Danger due to residual negative pressure or overpressure.

For residual overpressure: possible release of process fluids with risk of injury to the skin and eyes;
For negative pressure: possible drawing in of hair and clothing.
Disassemble the machine only after closing and draining the system connected to it.

14.3 REPLACING THE SOUND ABSORBING MATERIAL

When replacing the sound absorbing material in the silencers, proceed as follows:

- Undo the screws (1)
- Disconnect the silencer housings (1)
- Remove the sound absorbing material from the silencer housings (2)
- Recover the support mesh (2)
- Replace the sound absorbing material and assemble by proceeding in reverse order.

1

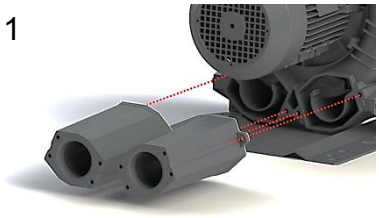

2

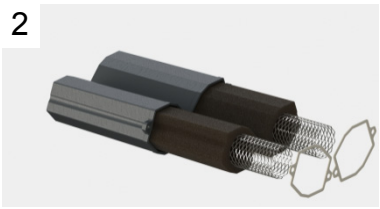

14.4 INTERNAL CLEANING

To clean the inside, proceed as follows:

- Place the unit upright, resting the fan cover on a flat and stable surface (1)
- Undo the screws (1)
- Remove the foot (1)
- Undo the cover screws (2)
- Remove the cover (3)
- Undo the screw and remove the washer (4)
- Remove the bearing and bearing cover (5)
- Remove the impeller (6)
- Clean and assemble by proceeding in reverse order
- Seal with System RS01 Arexons or Loctite 5970

1

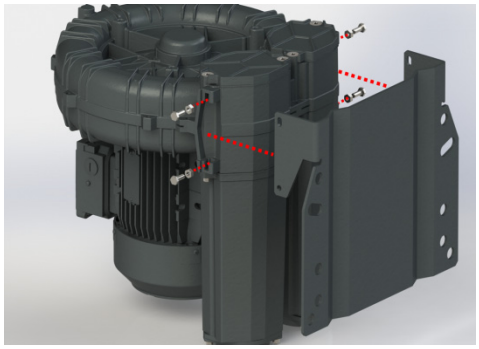

2

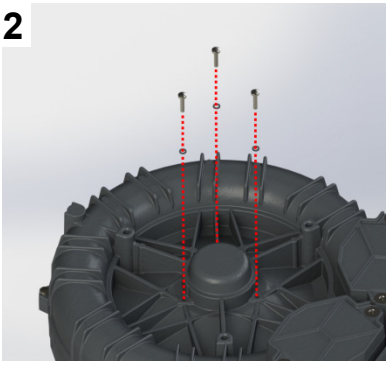

2

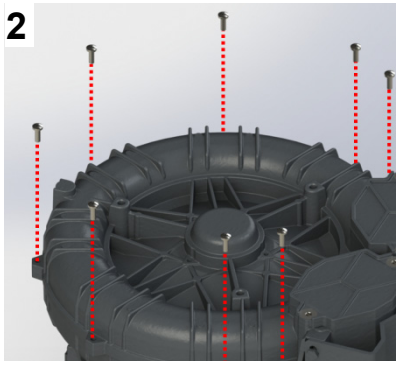

3

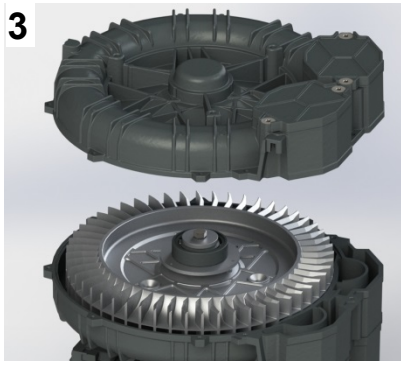

4

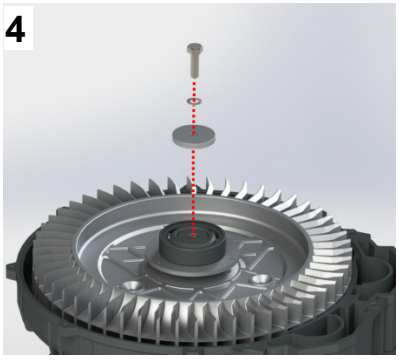

5

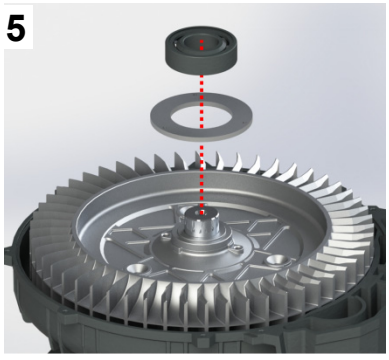

6

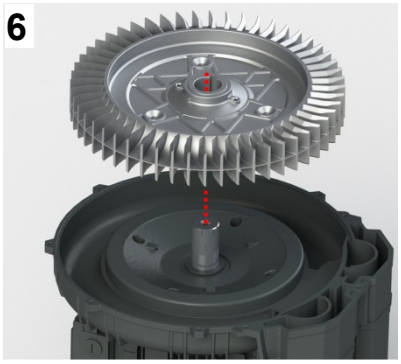

14.5 LIFE OF BEARINGS

- In normal operating conditions (values given in the SPECIFICATIONS) the machine's bearings must be replaced by FPZ personnel after 20000 hours or 3 years, whichever comes first.

ATTENTION	The unit's bearings must only be replaced: if all the instructions, parts list, and the section/exploded view of the respective unit are available.

14.6 OPERATION PROBLEMS

Problem	Seriousness[6]	Cause	Cure
The unit does not start	F	Incorrect electrical wiring.	Have the electrical connection checked by the Technician, referring to the diagram in the terminal box.
	F	Unsuitable supply voltage.	Make sure the supply voltage, measured at the motor terminals, matches the rated voltage +/-10%.
	G	The impeller is stuck.	Have the unit repaired by FPZ After-Sales Service.
Insufficient or no air flow	G	The suction filter is clogged.	Have the cartridge cleaned or replaced by the Technician.
	G	Wrong frequency (for inverter powered units).	Correct the frequency.
	G	Profile of impeller blades modified (due to deposits on the profile).	Have the impeller checked by FPZ After-Sales Service
Insufficient or no differential pressure	F	Wrong rotation direction.	Have the rotation direction reversed by the Technician, switching around the two power supply wires.
	G	Leak in the system	Find the leak and seal it.
Current absorption higher than the permissible value	F	Incorrect electrical wiring.	Have the electrical connection checked by the Technician, referring to the diagram in the terminal box.
	F	Supply voltage drop.	Have the supply voltage at the terminals restored within the permissible values by the Technician.
	G	The suction filter is clogged.	Have the cartridge cleaned or replaced by the Technician.
	G	The unit has accumulated deposits inside.	Have the unit cleaned inside by FPZ After-Sales Service.
	G	The unit is operating at a pressure and/or vacuum higher than the permissible value.	Operate on the system and/or control valve to decrease the pressure differentials.
High delivery air temperature	G	The unit is operating at a pressure/vacuum higher than the permissible value.	Operate on the system and/or control valve to decrease the pressure differentials.
	G	The suction filter is clogged.	Have the cartridge cleaned or replaced by the Technician.
	G	The unit has accumulated deposits inside.	Have the unit cleaned inside by FPZ After-Sales Service.
	G	Suction and/or delivery pipes obstructed.	Have the obstructions removed by the Technician.
	G	Intake air temperature above 40°C (+104°F).	Use heat exchangers to reduce the intake air temperature.
Abnormal noise	F	The sound absorbing material is damaged.	Have the sound absorbing material replaced by the Technician.
	G	The impeller rubs against the casing: - The unit is operating at a pressure/vacuum higher than the permissible value.	Operate on the system to decrease the pressure differentials.
	G	- Reduction of assembly play due to internal deposits (dust, dirt on pipes, process residues, etc.).	Have the unit cleaned inside by FPZ After-Sales Service.
	G	Worn bearing.	Have the bearing replaced by FPZ After-Sales Service.
	F	Unit installation position unsuitable.	Have the units installed on structures that cannot transmit or amplify the noise (tanks, metal plates, etc.) by the Technician.
Abnormal vibration	G	The impeller is damaged.	Have the impeller replaced by FPZ After-Sales Service.
	G	The impeller has accumulated deposits.	Have the unit cleaned inside by FPZ After-Sales Service.
	G	Unit fixed without vibration dampers.	Have the unit secured with vibration dampers by the Technician.
	F	Rigid connection to the system	Have flexible sleeves installed between the unit and the pipes by the Technician.
	G	Faulty bearing on blower side or motor side.	Have the bearing replaced by FPZ After-Sales Service.
Leaks	G	Faulty gaskets on the silencer.	Have the gaskets checked and, if necessary, replaced by FPZ After-Sales Service.
	G	Faulty gaskets on the cover.	Have the gaskets checked and, if necessary, replaced by FPZ After-Sales Service.

[6] Divided as follows: F for functional fault and G for serious fault

RMA – REPAIR REQUEST FORM and DECLARATION OF DECONTAMINATION

Fill out and return to: E-mail customercare@fpz.com

MACHINE / PRODUCT DATA

Type of machine / Model		Serial no.		purchase document no.	
Cause	☐ Repair Warranty		☐ Repair	☐ Periodical maintenance	
Description of defect	☐ Blocked		☐ Noisy	☐ Motor failure	
	☐ Other:				

DECLARATION OF DECONTAMINATION

- For the safety of our employees and compliance with the legal requirements during handling of substances hazardous to health and the environment, this declaration must be filled out completely and sent for each machine / product.
- Without said declaration filled out completely, repair cannot be carried out.
- The declaration must be sent with the shipping documents.

1. The machine / the product

☐ has NOT come into contact with hazardous substances. In case of repair / disposal, there is no risk to people and the environment. Go to point 3.

☐ has come into contact with hazardous substances. Go to point 2.

2. Information on contamination

Type of system on which the machine is installed:

_____

And it has come into contact with the following substances subject to the requirement of labelling or dangerous to health / environment:

Trademark	Chemical name	Hazardous substance class	Characteristics (e.g. toxic, flammable, corrosive)

☐ The machine / product has been washed and cleaned on the outside. Specify the decontamination method used:

_____

3. Legally binding declaration

The undersigned hereby declares that the details given on this form are true and complete.

APPLICANT'S DETAILS

Company name:		Date	
Street:		Postal Code	
City:		Province	
Contact person:			
E-mail / tel. no.			

COMPLETION BY FPZ CUSTOMER CARE

RMA no.	
NOTES	

FPZ BLOWER TECHNOLOGY

REGENERATIVE BLOWERS - PRESSURE

SCL K03 / K04 / K05 / K06

MS SERIES

SN 1874-9 1/2

TECHNICAL CHARACTERISTICS
- Aluminium alloy construction
- Smooth operation
- High efficiency impeller
- Maintenance free
- Mountable in any position
- Recognized TEFC - cURus motor

OPTIONS
- Special voltages (IEC 38)
- Surface treatments

ACCESSORIES
- Inlet and/or inline filters
- Additional inlet/outlet silencers
- Safety valves
- Flow converting device
- Optional connectors

Dimensions in inches.
Dimension for reference only.

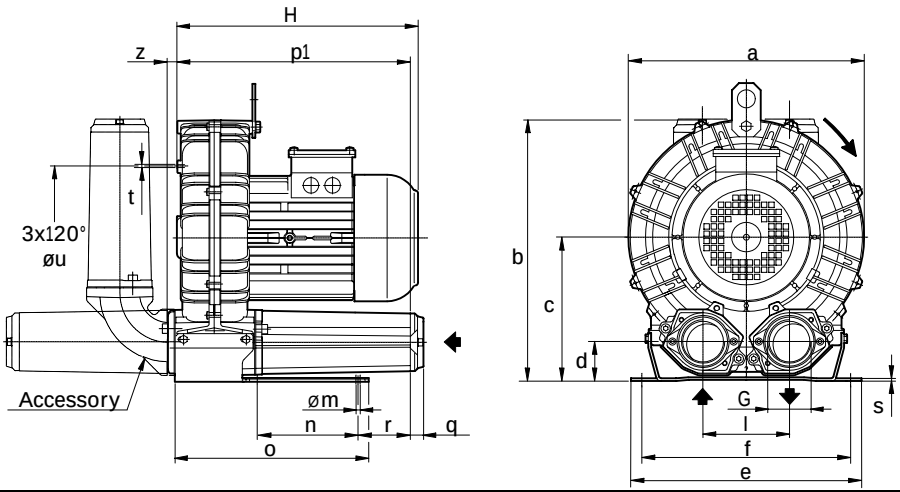

Model	a	b	c	d	e	f	G	l	m	n	o	p1	q	r	s	t	u	z
K03-MS	9.49	10.55	5.79	1.69	9.06	8.07	1"1/4 NPT	3.39	0.39	3.27	5.59	8.07	0.71	2.95	0.16	M6	5.51	0.47
K04-MS	11.22	12.40	6.77	1.93	10.04	8.86	1"1/2 NPT	4.02	0.47	3.74	6.73	8.74	0.71	2.76	0.16	M6	6.89	0.71
K05-MS	12.87	14.37	7 87	2.13	12.60	10.24	2" NPT	4.72	0.59	4.53	10.43	12.60	0.71	3.86	0.16	M8	7.87	0.75
K06-MS	14.80	15.47	8.07	2.13	12.80	11.42	2" NPT	4.92	0.59	5.51	10.71	13.15	0.71	3.35	0.16	M8	9.45	0.75

Model	Maximum flow Scfm		Installed power Hp		Maximum differential pressure △p (In WG)		Noise level Lp dB (A) (1)		Overall dimensions H	Weight
	60 Hz 3500 rpm	50 Hz 2900 rpm	60 Hz 3500 rpm	50 Hz 2900 rpm	60 Hz 3500 rpm	50 Hz 2900 rpm	60 Hz 3500 rpm	50 Hz 2900 rpm	Inches	Lbs
K03-MS	52	43	3/4	3/4	64	60	62.0	60.0	10.43	24.30
			1	1	95	77	62.3	60.3	11.97	26.50
K04-MS	98	81	1 ½	1 ½	58	80	64.8	62.8	11.65	36.40
			2	2	85	100	65.0	63.0	13.78	43.00
			3	-	120	-	65.2	-	13.78	49.60
K05-MS	156	129	2	2	52	70	70.5	68.5	13.20	51.80
			3	3	90	110	70.8	68.8	13.20	58.40
			4	4	128	120	71.1	69.1	14.40	67.20
K06-MS	216	179	3	3	50	65	73.0	71.0	13.54	68.70
			4	4	75	95	73.3	71.3	14.17	71.65
			5 ½	5 ½	110	140	73.6	71.6	14.17	77.60
			6 1/5 (2)	-	132	-	73.9	-	14.45	77.60

(1) Noise measured at 1 m distance with inlet and outlet ports piped, in accordance to ISO 3744.
(2) No cURus motor

- For proper use, the blower should be equipped with inlet filter and safety valve; other accessories available on request.
- Ambient temperaturefrom +5° to +104°F.
- Specifications subject to change without notice.

FPZ – INLET FILTERS

Inlet Filters

SS1905

FPZ inlet filters are used for pressure applications. The inlet filters combine filtration and sound attenuation into a compact package. Inlet filters consist of a filter cartridge enclosed by a carbon steel weather hood. Elements are easily serviceable by simply removing the weather hood.

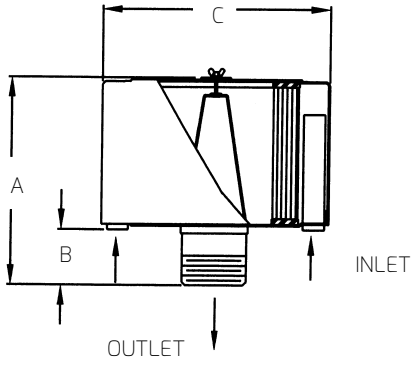

Dimension tolerance ± 1/8"

VG-020-013

FEATURES & SPECIFICATIONS

- Polyester: 99%+ removal efficiency standard to 5 micron. (Other media available upon request.)
- Fully drawn weather hood - no welds to rust or vibrate apart
- Tubular silencing design - tube is positioned to maximize sound attenuation and air flow while minimizing pressure drop
- Durable carbon steel construction with baked enamel finish
- Filter change out differential: 10"-15" H_2O Over Initial Delta P.

OPTIONAL DIRTY FILTER INDICATOR

The **VG-020-013** dirty filter indicator is used to maximize filter life for pressure applications only. The yellow indicator in the site window drops as dirt accumulates on the filter element. The element is ready for change out or servicing when the yellow indicator reaches the red zone. The filter condition can be determined without removing the weather hood even after the blower has been shut down.

The indicator can be mounted in the inlet piping between the blower and filter or directly to the filter housing by having a 1/8" npt tap installed in the hood. If a tap is required, FPZ part number **M020*** should be ordered.

Polyester Element	NPT	Dimensions (Inches) A	B	C	Used on Models	Approx Wt. Lbs
FS-15-050	½"	4	1 ½	6	10DL	2
FS-15-075	¾"	4	1 ½	6	15DH	2
FS-15-100	1"	4	1 ½	6	06	2
FS-19P-125	1 ¼"	6 5/8"	1 5/8"	6	K03-MS, R20-MD, R30-MD, R40-MD	3
FS-19P-150	1 ½"	6 5/8"	1 5/8"	6	K04-MS	4
FS-31P-200	2"	7 ¼"	2 ¼"	10	K05-MS, K05-TD	8
FS-231P-200	2"	12 ¼"	2 ¼"	10	K06-MS, K06-TD, K07R-MD, K08R-MD	14
FS-231P-300	3"	13"	3"	10"	K07-MS, K05-TS, K07-TD	15
FS-235P-300	3"	13"	3"	16"	K08-MS, K06-TS, K08-TD	29
FS-235P-400	4"	14"	4"	16"	K09-MS, K10-MS, K09-MD, K10-MD, K11-MD, K12-MD, K09-TD, K10-TD	30
FS-245P-400	4"	14"	4"	16"	K07-TS, K08-TS, K11-MS, K12-MS, K11-TD, K12TD	31
FL10**	NA	14 3/8"	1 3/8"	16 3/16"	K09-TS, K10-TS, K11-TS, K12-TS,	18

*M020 1/8" npt filter tap will be added to filter part number suffix if ordered.

**FL10 utilizes 15 micron paper element and does not include tubular silencers. FL10 filters are normally ordered with CA10

FPZ – SAFETY VALVES

® **FPZ, Inc**
150 N. Progress Drive
Saukville, WI 53080 - **U.S.A.**
Tel. (262) 268-0180
Fax (262) 268-0415
E-mail usa@fpz.com

SAFETY VALVES

VRL6 / VRL8 / VRL9

SN 1735-3 1/1

The VRL valves are designed to protect blowers and / or motors from over pressurization or excess vacuum. When there is over pressurization, the valve opens and discharges to the outside. When there is excess in vacuum, the valve opens and takes flow from outside.
The valve have been designed for low pressure / low vacuum, with minimal difference between the initial value at which the valve begins to open and its fully-opened position. The valves are supplied with 2 different springs to maximize its efficiency.
These compact valves, made of aluminum alloy, are both easy to install and calibrate. The valves are designed to operate in a wide range of capacities. The VRL can be plumbed to divert excess primary flow through a secondary external outlet when working in pressure conditions or to pipe-in a secondary flow when working in vacuum.
Maximum efficiency is achieved by keeping operating values (flow versus pressure or vacuum) within the **operating range** (shaded area on graph). Capacity refers to air having a density equal to 0.075 lbs./cu.ft .

VRL6 **VRL8** **VRL9**

OPERATING RANGE

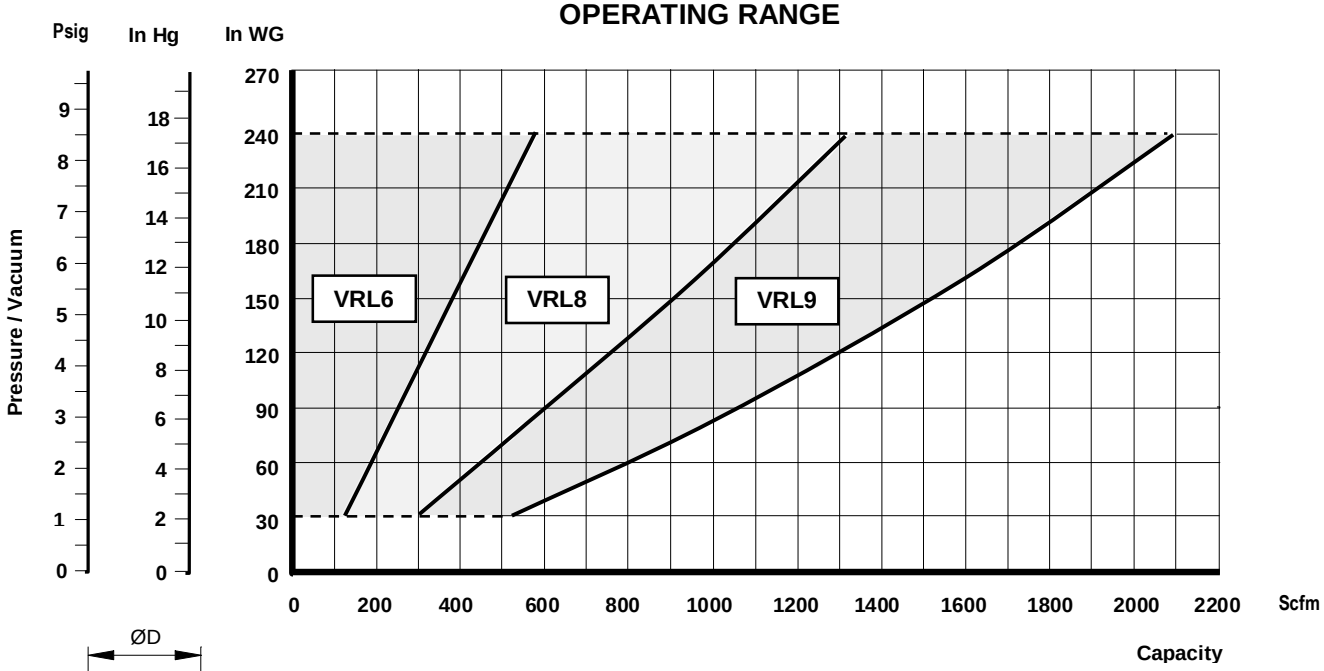

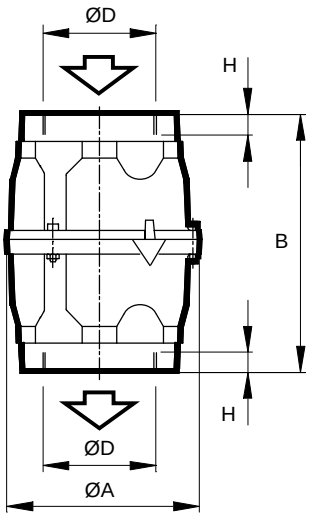

OVERALL DIMENSIONS

TYPE	ND	D	A	B	H	WEIGHT (Lbs)
VRL6	2”	2” NPT	4.02	6.90	0.47	1.9
VRL8	3”	3” NPT	5.31	7.48	0.59	4.2
VRL9	4”	4” NPT	6.30	8.11	0.71	5.7

- Dimensions in inches.
- Specifications subject to change without prior notice.

GEORG FISCHER – BALL VALVES

GF Piping Systems

Betriebsanleitung

Kugelhahn Typ 546, handbetätigt

Die technischen Daten sind unverbindlich. Sie gelten nicht als zugesicherte Eigenschaften oder als Beschaffenheits- oder Haltbarkeitsgarantien. Änderungen vorbehalten. Es gelten unsere Allgemeinen Verkaufsbedingungen.

Betriebsanleitung beachten
Die Betriebsanleitung ist Teil des Produkts und ein wichtiger Baustein im Sicherheitskonzept.
- Betriebsanleitung lesen und befolgen.
- Betriebsanleitung stets für Produkt verfügbar halten.
- Betriebsanleitung an alle nachfolgenden Verwender des Produkts weitergeben.

EG-Konformitätserklärung
Der Hersteller Georg Fischer Rohrleitungssysteme AG, 8201 Schaffhausen (Schweiz) erklärt, dass die Kugelhähne des Typs 546 gemäss der harmonisierten Bauart-Norm ISO 16135:2001
1. druckhaltende Ausrüstungsteile im Sinne der EG-Druckgeräterichtlinie 97/23 EG sind und solchen Anforderungen dieser Richtlinie entsprechen, die für Armaturen zutreffen,
2. den für Armaturen zutreffenden Anforderungen der Bauprodukte-Richtlinie 89/106/EG entsprechen.

Das E-Zeichen an der Armatur zeigt diese Übereinstimmung an (nach der Druckgeräterichtlinie dürfen nur Armaturen grösser DN 25 mit E gekennzeichnet werden) Die Inbetriebnahme dieser Kugelhähne ist so lange untersagt, bis die Konformität der Gesamtanlage, in die die Kugelhähne eingebaut sind, mit einer der genannten EG-Richtlinien erklärt ist. Änderungen am Kugelhahn, die Auswirkungen auf die angegebenen technischen Daten und den bestimmungsgemässen Gebrauch haben, machen diese Herstellererklärung ungültig. Zusätzliche Informationen können den «Georg Fischer Planungsgrundlagen» entnommen werden.

Schaffhausen, 01.01.2013

Dirk Petry
R&D Manager

Georg Fischer Piping Systems Ltd. CH-8201 Schaffhausen (Switzerland)
Phone +41(0)52 631 30 26 / info.ps@georgfischer.com / www.gfps.com

161.484.582 / GFDO 5684/1b, 2b, 4b, 6b (10.13)
© Georg Fischer Rohrleitungssysteme AG
CH-8201 Schaffhausen/Schweiz, 2013
Printed in Switzerland

1. Bestimmungsgemässe Verwendung
Der Kugelhahn Typ 546 ist ausschliesslich dazu bestimmt, nach Einbau in ein Rohrleitungssystem zugelassene Medien innerhalb der zugelassenen Druck- und Temperaturgrenzen abzusperren, durchzuleiten oder den Durchfluss zu regeln. Die maximale Betriebsdauer beträgt 25 Jahre.

2. Zu diesem Dokument
2.1 Mitgeltende Dokumente
- Georg Fischer Planungsgrundlagen Industrie

Diese Dokumente sind über die Vertretung von GF Piping Systems oder unter www.piping.systems.com erhältlich.

2.2 Abkürzungen

PN	Nenndruck
DN	Dimension

2.3 Sicherheits- und Warhinweise

GEFAHR	• Unmittelbar drohende Gefahr! Bei Nichtbeachtung drohen Ihnen Tod oder schwerste Verletzungen
WARNUNG	• Möglicherweise drohende Gefahr! Bei Nichtbeachtung drohen Ihnen schwere Verletzungen
VORSICHT	• Gefährliche Situation! Bei Nichtbeachtung drohen leichte Verletzungen
ACHTUNG	• Gefährliche Situation! Bei Nichtbeachtung drohen Sachschäden

3. Sicherheit und Verantwortung
- Produkt nur bestimmungsgemäss verwenden, siehe bestimmungsgemässe Verwendung.
- Kein beschädigtes oder defektes Produkt verwenden. Beschädigtes Produkt sofort austauschen.
- Sicherstellen, dass Rohrleitungssystem fachgerecht verlegt ist und regelmässig überprüft wird.
- Produkt und Zubehör nur von Personen montieren lassen, die die erforderliche Ausbildung, Kenntnis oder Erfahrung haben.
- Personal regelmässig in allen zutreffenden Fragen der örtlich geltenden Vorschriften für Arbeitssicherheit, Umweltschutz vor allem für druckführende Rohrleitungen unterweisen.

Für Kugelhähne gelten dieselben Sicherheitsvorschriften wie für das Rohrleitungssystem, in das sie eingebaut werden.

4. Transport und Lagerung
- Produkt in ungeöffneter Originalverpackung transportieren und lagern.
- Produkt vor schädlichen physikalischen Einflüssen wie Licht, Staub, Wärme, Feuchtigkeit und UV-Strahlung schützen.
- Produkt und seine Komponenten dürfen weder durch mechanische noch durch thermische Einflüsse beschädigt werden.
- Produkt in geöffneter Hebelstellung (Anlieferungszustand) lagern.
- Produkt vor Installations auf Transportschäden untersuchen.

5. Aufbau

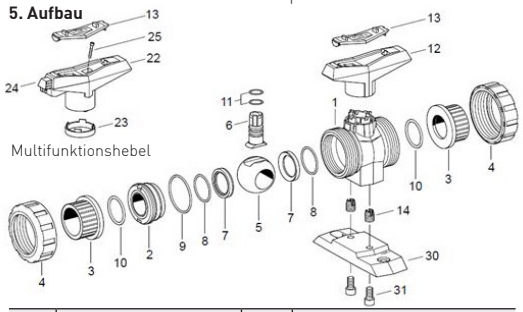

Pos.	Beschreibung	Pos.	Beschreibung
1	Gehäuse	11	Zapfendichtung
2	Einschraubteil	12	Standardhebel
3	Anschlussteil	13	Hebelklipp
4	Überwurfmutter	14	Gewindebuchsen
5	Kugel	22	Multifunktionshebel
6	Zapfen	23	Distanzring
7	Kugeldichtung	24	Entriegelungstaster
8	Hinterlagedichtung	25	Befestigungsschraube (Torx)
9	Gehäusedichtung	30	Befestigungsplatte
10	Anschlussteildichtung	31	Befestigungsschrauben

6. Installation

WARNUNG
Sachschaden bei Verwendung des Kugelhahns als Endarmatur
Wird der Kugelhahn ohne Überwurfmutter und Einlegeteil an der geschlossenen und der offenen Seite betrieben, kann es zum Defekt des Kugelhahns kommen.
- Sicherstellen, dass der Kugelhahn ausschliesslich mit beiden Einlegeteilen und Überwurfmuttern betrieben wird.

- Funktionsprobe durchführen: Kugelhahn von Hand schliessen und wieder öffnen. Kugelhähne mit erkennbarer Funktionsstörung dürfen nicht eingebaut werden
- Kugelhahn stets in geöffneter Kugelstellung in System bauen.
- Sicherstellen, dass Druckklasse, Anschlussart und Anschlussabmessungen den Einsatzbedingungen entsprechen.

WARNUNG
Der Kugelhahn Typ 546 hat produktspezifische Einbaumasse, Anschlüsse und Überwurfmuttern. Schäden des Rohrleitungssystems durch Verwendung anderer Bauteile und Einbaumasse (als für Typ 546 vorgesehen).
- Einbaumasse und -bezeichnungen in den technischen Dokumentationen mit den vorliegenden Bauteilen abgleichen.

- Kugelhahn erst unmittelbar vor Einbau aus Originalverpackung nehmen.
- Sicherstellen, dass Kugelhahn und Rohrleitung fluchten, um mechanische Beanspruchungen zu vermeiden.
- Kugelhahn einbauen, siehe Abbildungen **a – d**
- Spezifischen Verbindungsvorschriften für Klebe-, Schweiss- oder Schraubverbindungen einhalten, siehe Betriebs-/Klebeanleitungen der Schweissmaschinen bzw. Klebstoffhersteller.
- Anschlussteile gemäss ihrem Material und ihrer Ausführung mit den Rohrenden (Schweissen, Kleben, Schrauben, Flanschen) verbinden.
- Anzugsmomente der Flanschschrauben und weitere Informationen beachten, siehe Planungsgrundlagen.

WARNUNG
Materialbeschädigung der Überwurfmutter oder Gewindebeschädigung durch Einsatz von Zangen oder vergleichbaren Hilfsmitteln durch zu starke Anzugskräfte.
- Überwurfmuttern handfest, ohne Einsatz von Hilfwerkzeug, anziehen.

WARNUNG
Beschädigung des Materialgehäuses durch Nichtbeachtung der max. Einschraubtiefe
Die Druckbelastung eines beschädigten Gehäuses kann zum Bruch führen.
- Bei Verwendung der integrierten Befestigung im Fuss des Typs 546, Angaben der max. Einschraubtiefe der Schrauben beachten.

Maximale Einschraubtiefe der Schrauben in den Kugelhahn

DN	10/15	20/25	32/40	50
Schraube	M6	M6	M8	M8
Einschraubtiefe H (mm)	12	12	15	15

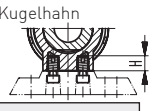

ACHTUNG
Wird bei Temperaturwechseln die Wärmeausdehnung verhindert, treten Längs- bzw. Biegekräfte auf.
Um die Funktionsweise der Armatur nicht zu beeinträchtigen:
- Sicherstellen, dass Kräfte durch geeignete Festpunkte vor bzw. hinter Armatur aufgenommen werden.
  Befestigungsplatte (30) für Befestigung der Armatur von vorn verwenden. Dadurch werden Kräfte aufgenommen, die bei der Betätigung der Armatur entstehen können (z. B. Losbrechmoment). Übertragung der Bedienungskräfte auf Rohrleitungssystem werden vermieden.

VORSICHT
Der Prüfdruck einer Armatur darf den Wert 1.5 x PN (höchstens aber PN + 5 bar) nicht überschreiten). Die Komponente im Rohrleitungssystem mit dem niedrigsten PN bestimmt den maximal zulässigen Prüfdruck im Leitungsabschnitt.
- Armaturen und Anschlüsse während Druckprobe auf Dichtheit prüfen. Ergebnisse protokollieren.

Für die Druckprobe von Kugelhähnen gelten dieselben Anweisungen wie für die Rohrleitung. Detaillierte Informationen, siehe Kapitel Verarbeitung und Verlegung in den Planungsgrundlagen.
- Sicherstellen, dass alle Armaturen in der erforderlichen Offen- oder Geschlossenstellung sind
- Leitungssystem füllen und sorgfältig entlüften.
- Nach erfolgreicher Dichtheitsprüfen: Prüfmedium entfernen.

7. Demontage

WARNUNG
Verletzungsgefahr durch unkontrolliertes Ausweichen des Mediums
Wurde der Druck nicht vollständig abgebaut, kann das Medium unkontrolliert entweichen.
Je nach Art des Mediums besteht Verletzungsgefahr.
- Druck in der Rohrleitung vor dem Ausbau vollständig abbauen.
- Bei gesundheitsschädlichen, brennbaren oder explosiven Medien Rohrleitung vor dem Ausbau vollständig entleeren und spülen. Dabei mögliche Rückstände beachten.
- Ein sicheres Auffangen des Mediums durch entsprechende Massnahmen gewährleisten (z.B. Anschluss eines Auffangbehälters). Der Kugelhahn soll nach dem Ausbau gelagert oder zerlegt werden.
- Den ausgebauten Kugelhahn halb öffnen (45° Stellung) und in senkrechter Lage leerlaufen lassen. Medium dabei auffangen.

- Wurde der Kugelhahn durch Lösen der Überwurfmuttern (4) aus der Leitung entfernt und kann eine Restentleerung sichergestellt werden, so sind zur Demontage Schritte **e – i** auszuführen
- Berücksichtigen, dass Einschraubteil (2) ein Linksgewinde hat.

8. Wartung
Kugelhähne benötigen im Normalbetrieb keine Wartung. Dennoch müssen die folgenden Massnahmen beachtet werden:
- Periodische Prüfung, dass nach aussen kein Medium austritt.
- Kugelhähne, die dauernd in der gleichen Stellung sind, 1-2 x pro Jahr zu betätigen, um ihre Funktionstätigkeit zu prüfen.

Bei häufigen Stellbewegungen – z.B. durch Automatisierung der Armatur oder infolge chemischen Angriffs auf das Dichtungsmaterial – kann es notwendig sein, Teile im Innern der Armatur auszutauschen. Zu diesem Zweck muss die Armatur aus dem Rohrleitungssystem ausgebaut werden. Die Dichtungselemente sowie Kugel, Zapfen und Einschraubteil können ausgetauscht werden, siehe Ersatzteile von GF Piping Systems.

VORSICHT
Materialschaden und/oder Verletzungsgefahr.
Bei einem Austausch dürfen ausschliesslich die für die Armatur vorgesehenen Original-Ersatzteile von GF Piping Systems verwendet werden.
- Ersatzteile mit den Angaben auf dem Typenschild bestellen.
- Keine Schmiermittel auf Mineralölbasis oder Vaseline (Petrolatum) verwenden.
- Für lackstörungsfreie Kugelhähne spezielle Herstellerhinweise beachten.
- Dichtungen mit Fett auf Silikon- oder Polykolbasis schmieren.
- Alle Dichtungen (Material z.B. EPDM, FPM) sind organische Werkstoffe. Sie reagieren auf Umwelteinflüsse und müssen daher in ihrer Originalverpackung möglichst kühl, trocken und dunkel gelagert werden. Dichtungen vor dem Einbau auf mögliche Alterungsschäden wie Anrisse und Verhärtungen prüfen. Keine defekten Ersatzteile verwenden.

- Zur Montage der Einzelteile und Austausch der Dichtungen, Schritte **k – s** ausführen.
- Anschraubteil (2) so anziehen, dass Kugel noch satt drehbar ist.

9. Montage und Betätigung des MF-Hebels
Alternativ zum Standardhebel kann ein verriegel- und abschliessbarer Multifunktionshebel (MF-Hebel) montiert werden, siehe Explosionszeichnung MF-Hebel in Kapitel 5. Dazu Schritte **t – w** ausführen:
- Am unteren Teil des Hebelschafts befindet sich ein Distanzring (23). Korrekten Sitz im Schaft (Arretierung) kontrollieren.

Um den MF-Hebel zu bedienen, Schritte **x – y** ausführen:
x: Taster (24) zur Entriegelung in den Hebel drücken. Taster in dieser Position halten: Der Hebel kann nun um 90° bewegt werden.
y:Der Hebel wird in der entsprechenden Position verriegelt und kann in dieser Position durch ein Schloss vor unbefugtem Zugriff gesichert werden.

GF Piping Systems

Instruction Manual

Ball Valve Type 546, manual

The technical data are not binding. They neither constitute expressly warranted characteristics nor guaranteed properties nor a guaranteed durability. The are subject to modification. Our General Terms of Sale apply.

Observe instruction manual
The instruction manual is part of the product and an important module of the safety concept.
- Read and observe instruction manual.
- Always keep instruction manual available at the product.
- Pass instruction manual to following users of the product.

EC declaration of conformity
The manufacturer, Georg Fischer Piping Systems Ltd, 8201 Schaffhausen (Switzerland), declares, in accordance with the harmonized ISO 16135:2001 standard, that the ball valves type 546
1. are pressure-bearing components in the sense of the EC Directive 97/23 EC concerning pressure equipment and that they meet the requirements pertaining to valves as stated in this directive,
2. correspond to the respective requirements for valves pursuant to Directive 89/106/EC concerning building products.

The E emblem on the valve refers to this accordance (as per the directive on pressure equipment, only valves larger than DN 25 may be marked with E. Operation of these ball valves is prohibited until conformity of the entire system into which the ball valves have been installed is established according to one of the above mentioned EC directives. Modifications on the ball valve which have an effect on the given technical specifications and the intended use render this manufacturer's declaration null and void. Additional information is contained in the «Georg Fischer Planning Fundamentals

Schaffhausen, 01.01.2013

Dirk Petry
R&D Manager

Georg Fischer Piping Systems Ltd. CH-8201 Schaffhausen (Switzerland)
Phone +41(0)52 631 30 26 / info.ps@georgfischer.com / www.gfps.com

161.484.582 / GFDO 5684/1b, 2b, 4b, 6b (10.13)
© Georg Fischer Rohrleitungssysteme AG
CH-8201 Schaffhausen/Schweiz, 2013
Printed in Switzerland

1. Intended Use
The ball valve type 546 is intended exclusively for shutting off and conducting allowed media within the allowable pressure and temperature range or for controlling flow in the piping systems into which it has been installed. The maximum service life is 25 years.

2. Regarding this document
2.1 Related documents
- Georg Fischer planning fundamentals industry

These documents can be obtained from the GF Piping Systems representation or under www.piping.georgfischer.com.

2.2 Abbreviations

PN	Pressure Nominate
DN	Dimension

2.3 Safety Instructions and Warnings

DANGER	• Imminent danger! Non-observance may result in major injuries or death
WARNING	• Possible danger! Non-observance may result in major injuries
CAUTION	• Dangerous situation! Non-observance may result in minor injuries
NOTICE	• Dangerous situation! Non-observance may result in material losses

3. Safety and responsibility
- Products may only be used for its intended purpose, see intended purpose.
- Never use a damaged or defective product. Immediately sort out damaged product.
- Make sure that the piping system has been installed professionally and serviced regularly..
- Products and equipment shall only be installed by persons who have the required training, knowledge or experience.
- Regularly train personnel in all relevant questions regarding locally applicable regulations regarding safety at work, environmental protection especially for pressurised pipes.

The safety instructions for the ball valve are the same as for the piping system they are installed in.

4. Transport and storage
- Transport and/or store product in unopened original packaging.
- Protect product from dust, dirt, dampness as well as thermal and UV radiation.
- Make sure that the product has not been damaged neither by mechanical nor thermal influences.
- Check product for transport damages prior to the installation.

5. Design

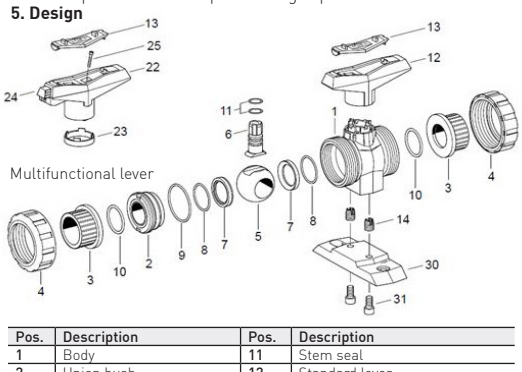

Pos.	Description	Pos.	Description
1	Body	11	Stem seal
2	Union bush	12	Standard lever
3	Connecting part	13	Lever clip
4	Union nut	14	Threaded insert
5	Ball	22	Multi-functional lever
6	Stem	23	Spacer
7	Ball seal	24	Unlocking latch
8	Backing seal	25	Fastening screw (Torx)
9	Body seal	30	Mounting plate
10	Union seal	31	Fastening screws

6. Installation

WARNING
Damage to property when using the ball valve as end of line. If the ball valve is operated without union nut and insert at the closed and the opened side, there can be malfunction of the valve.
- Make sure the valve is operated with both union nuts and inserts.

- Make a function test: close the ball valve by hand and open it again. Ball valves which do not function properly must not be installed.
- Built the ball valve always into the system in the opened position.
- Make sure that pressure rating, type of connection and dimensions correspond to the operating conditions.

WARNING
The installation dimensions, connections and union nuts of the ball valve type 546 are product specific. Use of components and installation dimensions other than those prescribed for type 546 can cause damage to the piping system.
- Compare the installation dimensions and specifications in the technical documentation with those of the components at hand.

- Remove the ball valve from its original packaging immediately before installation.
- Make sure that the ball valve is aligned with the pipe so that the valve is kept free of mechanical stress.
- Install ball valve, see figures **a – d**
- Adhere specific jointing instructions for solvent cementing, fusion and screw connection methods, see operating manuals of the fusion machines or the cementing instructions of the adhesive manufacturer.
- Join the connecting parts with the pipe ends according to their materials and types (fusion, cementing, screwing, flanges).
- The tightening torque of the flange screws and other useful information, see Georg Fischer Planning Fundamentals.

WARNING
Material damage of the union nut or the thread due to tools, such as pliers or if they are tightened too strong.
- Thighten the union nuts only handtight without the use of additional tools.

WARNING
Material damage due to nonobservance of the insertion depth
The pressure load of a damaged housing can cause breakage.
- When using the integrated fastening in the foot of the ball valve, always observe the requirements regarding the maximum insertion depth of the screws.

Maximum insertion depth of the screws into the ball valve

DN	10/15	20/25	32/40	50
Schraube	M6	M6	M8	M8
Einschraubtiefe H (mm)	12	12	15	15

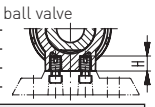

NOTICE
In piping systems with temperature fluctuations, bending and longitudinal forces can occur if heat expansion is hindered.
o as not to impair the functioning of the valve:
- Forces must be absorbed by implementing suitable fixed points in front of or behind the valve.
  Use mounting plate (30) for front fastening. Forces which can occur during valve operation are absorbed (e.g. initial breakaway torque). The operating forces are thus prevented from being transferred over to the piping system.

CAUTION
Overstraining due to exceeded maximum pressure
The test pressure of an assembly may not exceed 1.5 x PN (maximum of PN + 5 bar). The component with the lowest PN determines the maximum allowed test pressure in the performance section.
- Prior to and during the pressure test, the assemblies and connectors must be checked for leak-tightness. Record result..

For the pressure test of ball valves, the same instructions apply as for the piping system. For detailed information, please refer to the GF Planning Fundamentals, chapter Processing and Installation.
- Check that all valves are in the required open or closed position.
- Fill the piping system and deaerate carefully.
- After the leak test: remove the test medium.

7. Disassembly

WARNING
Risk of injury due to uncontrolled evasion of the medium. If the pressure was not relieved completely, the medium can evade uncontrolled. Depending on the type of medium, risk of injury may exist.
- Completely relieve pressure in the pipes prior to dismounting.
- Completely empty and rinse pipe prior to dismounting in connection with harmful, flammable, or explosive media. Pay attention to potential residues.
- Provide for safe collection of the medium by implementing appropriate actions (e.g. connection of a collection container). After dismounting, the ball valve should be stored or disassembled.
- Partially open the dismounted ball valve (45° position) and let drain in vertical position.

- When the ball valve has been removed from the pipe by loosening the union nut (4) and preparations have been made for drainage, disassemble the valve by following steps **e – i**
- Note that the union bush (2) has left-handed thread.

8. Maintenance
Ball valves require no maintenance under normal operating conditions. However, following measures should be noted:
- Periodic inspection to make sure that no medium is leaking is sufficient.
- Make a function test for ball valves which are kept permanently in the same position 1–2 x a year to check serviceability.

For frequent control operations – valve automation, or due to chemical attack on the sealing material – it may become necessary to replace parts inside the valve. For this purpose, the valve must be removed from the piping system. The sealing elements, as well as the ball, stem and union bush can be replaced, see spare parts list of GF Piping Systems.

CAUTION
Material damage and/or risk of injury.
Only original Georg Fischer spare parts designed specifically for this valve may be used for replacement purposes.
- Note all the details given on the type plate when ordering spare parts.
- Never use petroleum-based greases or Vaseline (Petrolatum).
- For silicon-free ball valves, please consult the special manufacturer's instructions.
- All the seals must be lubricated with a silicon or polyglycol based grease.
- All the seals (made of e.g. EPDM, FPM) are organic materials which react to environmental influences. They must therefore be kept in their original packaging, and stored cool, dry and dark. The seals should be checked for damages from aging, such as fissures and hardening, before mounting.
- Do not use defective spare parts.

- To assemble the components and replace seals, follow the steps **k – s**.
- Tighten the union bush (2) so that the ball moves snugly.

9. Mounting and using the MF lever
As an alternative to the standard lever, you can install a lockable multi-functional (MF) lever, see exploded drawing for MF lever in chapter 5. Follow steps **t – w**:
- There is a spacer (23) at the bottom of the lever shaft. Make sure it is positioned correctly in the shaft (catch).

To work the MF lever, follow the steps **x – y**:
x: Press the unlocking latch (24) into the lever. Hold the latch in this position and the lever can be moved 90°.
y: The lever will lock in the respective position and can be secured in this position with a lock, protecting it from unauthorized access.

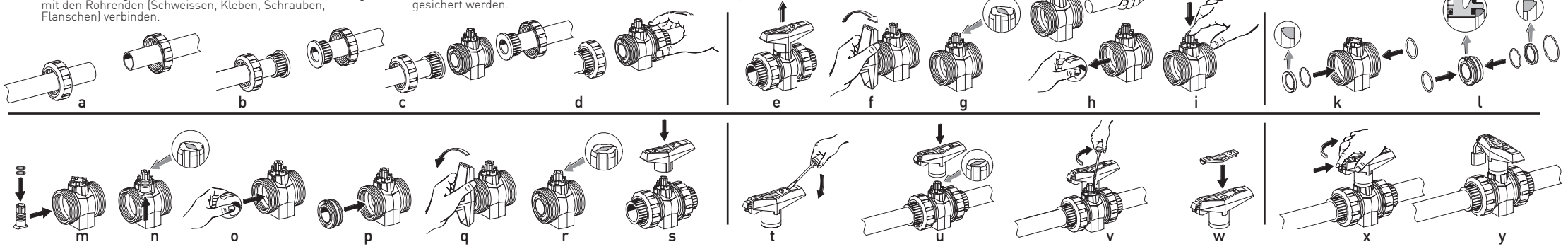

HEBDRAULIQUE – HOSES

HEBDRAULIQUE®

VENTE ▪ ASSEMBLAGE ▪ INSTALLATION
DE CANALISATIONS HYDRAULIQUES,
PNEUMATIQUES, MÉTALLIQUES ET INDUSTRIELLES

MONTRÉAL ▪ POINTE-CLAIRE ▪ LAVAL ▪ TERREBONNE ▪ MIRABEL ▪ BOUCHERVILLE ▪ CHICOUTIMI ▪ ALMA ▪ QUÉBEC

INSTALLATION HINTS FOR FLEXIBLE METAL HOSES

To ensure best performance and service life of flexible metal braided hoses, we suggest the following hints for proper installation. If you have any questions or concerns regarding this topic,do not hesitate to contact your HEBDRAULIQUE representative.

1) Do not compress a flexible connector to fit as this puts residual tension on the braid and stresses the inner corrugated element.

   Do not stretch a connector to fit as this also puts residual tension on the braid and fittings.

   Do measure required lenght carefully and when necessary re-pipe or re-order a connector to fit.

2) Do not apply torque to a connector.Flexible metal connectors are not designed to handle « any » torsional movement never put wrench directly on a braid or braidsleeve.

   Do use swivel fittings whenever possible and always use « 2 » wrenches to ensure that no torque is applied to a connector « at any time ».

3) Do not bend hose sharply near fittings. When necessary re-pipe so that flange face or fitting are perpendicular to the axis of the connector.

4) Do not allow a flexible connector to support any weight other than its own.

   Do install pipe Hangers before installing flexible connector to ensure that all weight of pipe is on the hangers.

   Do not fail to anchor piping close to a flexible connector,and at the end opposite to the connector.Install straight when possible or contact your reprensentative for maximum allowable offsets.

HEBDRAULIQUE LAVAL
FABRICATION PLANT
3105 BOUL. INDUSTRIEL,LAVAL ,H7L 4P8

TEL : 450-669-6888
FAX : 450-669-5560
flexible@hebdraulique.ca

Technical Service Bulletin

November 2013 TSB 411.02

Assembly, Installation and Servicing Guidelines for HYDRAsub®-Energy Saving (ES) MBR Modules

This Technical Service Bulletin provides information on how to assemble, install and service a HYDRAsub®-Energy Saving (ES) MBR module. Assembly may be required when the module is first shipped. Installation of the modules into the membrane tank is also discussed to ensure proper precautions are taken and that the module is secured and stable in the tank. Finally, guidelines are given for servicing a HYDRAsub®-ES MBR module if maintenance or removal is required.

TABLE OF CONTENTS

1 Bill of Materials (BOM) 4
1.1 HYDRAsub®-ES MBR Module (HSM) 4
1.2 HYDRAsub®-ES MBR Cage (HSC-ES) 4
1.3 HYDRAsub®-ES MBR Element (HSE) 7
1.4 HYDRAsub®-ES MBR Filtrate Adapters (HSA) 8
1.5 HYDRAsub®-ES MBR Air Diffusers (HSD) 9
2 Materials and Tools 10
3 Module Assembly 11
3.1 Assembly Site Conditions 11
3.2 Assembly Procedure 11
3.2.1 Air Diffuser Installation 11
3.2.2 Filtrate Header Installation 12
3.2.3 Installation Guide Installation 12
3.2.4 Air Supply Line Support Installation 13
3.2.5 Element Installation 13
3.2.6 Filtrate Adapter Installation 14
3.2.7 Filtrate Adapter Retainer Installation 15
4 Guide rail Installation 17
4.1 Guide rail Selection 17
4.2 Guide rail Placement 17
4.3 Guide rail Anchoring 18
5 Module Installation 21
5.1 Lifting the Module 21
5.2 Module Placement 22
5.3 Air and Filtrate Hose Connections 22
6 Module Maintenance and Service 24
6.1 Troubleshooting Guide 24
6.2 Module or Train Isolation 28
6.3 Module Removal 28
6.3.1 Air and Filtrate Connections 28
6.3.2 Module Removal from Tank 28
6.3.3 Module Conditions Outside of Tank 29
6.4 Module Inspection 29
Module Disassembly 30
6.4.1 30
6.4.2 Filtrate Connection 30
6.4.3 Air Connection 30
6.4.4 Filtrate Adapters 30
6.4.5 Elements 31
6.4.6 Air Diffusers 32

LIST OF FIGURES

Figure 1: Partially assembled membrane cage (installation guides and filtrate adapter retainers not shown) 5
Figure 2: Filtrate header (left) and air diffuser (right).6
Figure 3: Filtrate Adapter Retainer and Installation Guides 7
Figure 6. Filtrate adapters, assembled and as separated elbows.....9
Figure 7. Top view of air diffuser (left) and bottom view (right) 9
Figure 8. Air Diffuser Installation.....11
Figure 11: Air Supply Line Supports 13
Figure 13. Filtrate adapters in place.....15
Figure 14. Assembled HYDRAsub-ES MBR module 16
Figure 16. (a) Guide rails are welded to the top anchor which is bolted to the top of a concrete basin, (b) guide rails are welded to the top anchor which is welded to a steel frame around the hatch lid of tank, and (c) guide rails are welded to a steel beam that runs across the top of the tank 19
Figure 17. Guide rail welded to an anchor which can be bolted to the bottom of the tank.....20
Figure 18. Lifting the module with chains (left) and a hydraulic truck crane (right) 21
Figure 19. Securing lifting chains to guide rails (left) and chains tied to rail on outside of tank (right) 22
Figure 20: Filtrate and Air Hose Connections 23
Figure 21. Removing connection from module to air header 28
Figure 22. Example of a chain getting caught on the guide rail support.....29
Figure 24. Removing element during module inspection 31

LIST OF TABLES

Table 1: Tools required for assembly, installation, and servicing.....10
Table 2. Troubleshooting Guide.....24

Safety Notices:

All safety precautions must be adhered to when operating equipment, working in enclosed spaces, at elevated levels, on or near ladders, floor or exposed openings, etc. in accordance with standards, local rules and regulations. The assembly, installation and servicing of HYDRAsub®-ES MBR modules may entail the use of a crane or hoist, working 8 ft (2.4 m) or higher above the ground, and working near an exposed opening, such as an open tank, where proper harnessing may be needed for operators. Safety boots and hardhats are also recommended. Personal protective equipment (PPE) should be used properly when working with or near chemicals, hazardous waste or corrosive materials. The use of PPE and good hygiene (washing hands with soap and water frequently, keeping equipment clean, etc.) will help prevent contamination and disease. Additionally, required immunizations, per local regulations, should be administered for operators working around sewage or wastewater.

1 Bill of Materials (BOM)

1.1 HYDRAsub®-ES MBR Module (HSM)

The HSM consists of the entire membrane unit, including the HYDRAsub®-ES MBR cage (HSC), HYDRAsub®-ES MBR elements (HSE), HYDRAsub®-ES MBR filtrate adapters (HSA) and HYDRAsub®-ES MBR air diffusers (HSD). Each module will have one cage to hold the elements, adapters, and diffusers. The number of these enclosed parts will depend on the module class (HSM500-ES, HSM1000-ES, or HSM1500-ES). The detailed BOM for each module is included in its respective drawing. For the sake of explanation, drawings for the HSM500-ES (refer to Appendix A) will be used throughout this document as an example.

Upon receipt of the module and/or its parts, immediately check for damage during shipment, including dents, cracks or loose parts. If there is any evidence of damage or the possibility of the membranes being wet or exposed to moisture, do not remove the module from the packing. Contact Hydranautics Customer Service immediately.

1.2 HYDRAsub®-ES MBR Cage (HSC-ES)

The cage consists of multiple pieces, including a frame, nuts and bolts, and connection points. It is constructed of SS304 or SS316 (upon special request) and can weigh up to 635 kg (~1400 lbs), without any other components installed, depending on the module type. The cage can be divided into six parts- the membrane frame, two filtrate collection headers, one air diffusers (two air diffusers for HSC1500-ES), two filtrate adapter retainers, two installation guides and two air supply line supports. (The HSC1500-ES has 4 air supply line

supports.) A partially assembled cage is shown in Figure 1

Figure 1: Partially assembled membrane cage (installation guides and filtrate adapter retainers not shown)

The membrane frame is a rectangular frame which holds the elements, the filtrate headers, the air diffuser, and the installation guides. Each filtrate header, shown on the left side of Figure 1, is bolted to the top of the frame. Each has

openings to receive the filtrate adapters and one (or two for the headers on the HSC1500-ES) connection point to connect each module to its respective train filtrate header. The air diffuser, shown on the right side of F is bolted to the bottom of the frame. The air is supplied to the diffuser via two connections on either side of the diffuser. (The HSC1500-ES has 2 air diffusers.)

Figure 2: Filtrate header (left) and air diffuser (right)

Two filtrate adapter retainers, which are bolted to the frame, keep the filtrate adapters installed in the filtrate headers and elements, and the elements from sliding out of the frame. One filtrate adapter retainer is indicated in Figure 3 (with elements and filtrate adapters installed) by an arrow. They are removed during installation or removal of the elements. Four installation guides are bolted to the frame, two on either end at the top and bottom, to ease installation of the modules in the membrane tank. Two installation guides are circled in Figure 3. The longer installation guide is installed on the same side the module as the air diffuser connections. Note that for HSC1500-ES, both installation guides are the same length.

Figure 3: Filtrate Adapter Retainer and Installation Guides

1.3 HYDRAsub®-ES MBR Element (HSE)

The elements contain the membrane fibers which are potted into the element frame at the top and the bottom. The filtrate carrier transports filtrate to the top of the element where it is fed into the main filtrate header of the module as shown in . One module will hold multiple elements. For example, the HSM500 contains 20 HSE25, that is 20 elements with 25 m^2 of membrane surface area in each.

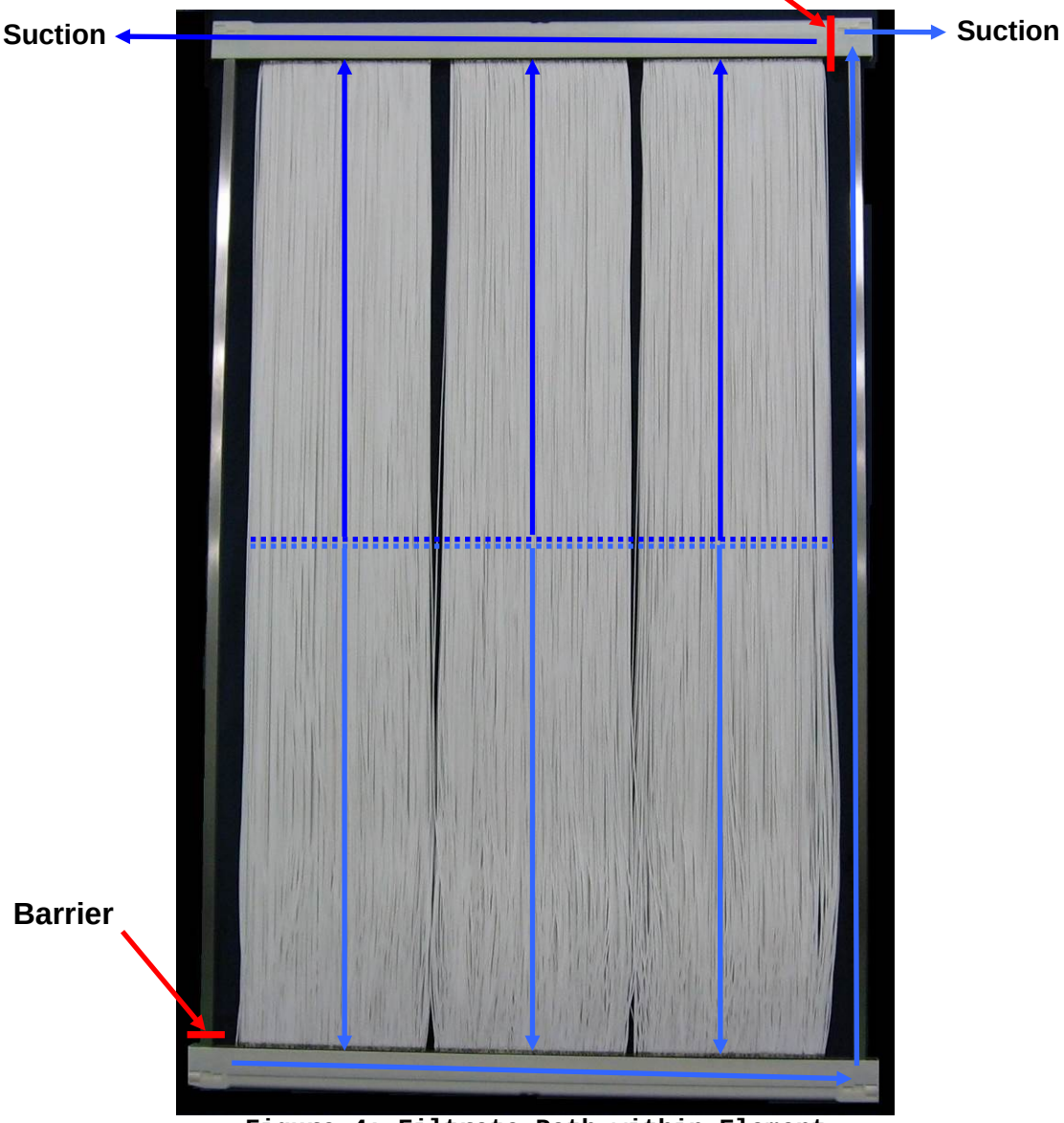

Figure 4: Filtrate Path within Element

1.4 HYDRAsub®-ES MBR Filtrate Adapters (HSA)

The filtrate adapters fit into the upper ends of each element after the element is installed into the cage. The adapters consist of two plastic elbows and multiple o-rings and back-up rings to seal the filtrate path from each element into the main filtrate header of the module. The top end of the adapter is the shorter elbow (horizontally), which inserts into the main filtrate header of the module. The part of the adapter that is inserted into the filtrate header has a lip as well. The bottom portion inserts into the top of the element on both sides.

Figure 5. Filtrate adapters, assembled and as separated elbows

1.5 HYDRAsub®-ES MBR Air Diffusers (HSD)

The air diffuser used in the module is a unique Hydranautics' patent pending design. It is a sheet of metal cut and bent to a specific shape which results in uniform aeration and does not clog.

Figure 6. Top view of air diffuser (left) and bottom view (right)

2 Materials and Tools

The tools listed are required for assembly, installation, and servicing of the HSM500:

Table 1: Tools required for assembly, installation, and servicing

No.	Tool	Size	Activity
2	Wrench (angle or box end)	1/2” and 3/8”	Attaching filtrate header to membrane frame.
2	Wrench (angle or box end)	1/2” and 3/8”	Attaching diffuser to membrane frame
2	Wrench (angle or box end)	1/2” and 3/8”	Filtrate Adapter retainer plate installation/removal
1	Lifting mechanism (crane, hoist, hydraulic truck, etc.)	Rated to handle the module wet weight plus 50% safety factor	Module installation/removal
4	Lifting chains, cables, or straps	Each rated to handle ¼ of the module wet weight plus 50% safety factor	
4	Anchor shackles, (Angle or box end) eyebolts, etc.		

3 Module Assembly

3.1 Assembly Site Conditions

The membranes must be stored in a sheltered area, protected from freezing (greater than 5° C), moisture, direct sunlight and extreme heat (less than 40° C). The membranes must not come in contact with any water until the module is placed into operation. The area selected to assemble a module shall be free of debris and sharp edges. There should be enough room on either side of the module to insert the elements. There also must be clearance to lift the module into the tank and room for a crane, hoist or other lifting mechanism.

3.2 Assembly Procedure

Typically, the membrane frame, air diffuser, filtrate headers, filtrate adapter retainers, installation guides, and air supply line supports are disconnected for shipping. The elements and adapters are shipped in a separate package. The membrane cage may be shipped on its side and may require a forklift or crane to put it upright.

3.2.1 Air Diffuser Installation

The air diffuser has four mounting tabs with slots for level adjustment which match up with holes a few inches from the bottom of the vertical channels of the membrane frame. The air diffuser is bolted to the frame. The easiest method to bolt the air diffuser to the bottom of the frame is to tip the frame onto its back, as shown in Figure 7.

Figure 7. Air Diffuser Installation

IN ORDER FOR THE DIFFUSER TO EVENLY DISTRIBUTE AIR TO THE ELEMENTS, IT MUST BE LEVEL. THIS IS ONE OF THE MOST CRITICAL STEPS OF THE MODULE ASSEMBLY AND INSTALLATION. If the membrane tank floor is level, then the diffuser will be level if square with the membrane frame. However, if the floor of the membrane tank is not level, the diffuser should be adjusted in place to ensure it is level.

3.2.2 Filtrate Header Installation

After installing the air diffusers, the filtrate headers are bolted to the top of the frame, as shown in Figure 8.

Figure 8: Filtrate Header Installation

After installation of the filtrate headers, the frame can be set upright.

3.2.3 Installation Guide Installation

The installation guides are bolted to center of either side of the membrane frame at both the top and the bottom of the frame, as previously shown in Figure 3.

Figure 9: Long Installation Guide (left) and Short Installation Guide (right)

3.2.4 Air Supply Line Support Installation

Finally, the air supply line supports are bolted near the top of frame on the side that the diffuser connections are located, as shown in Figure 10.

Figure 10: Air Supply Line Supports

3.2.5 Element Installation

Next, the elements are loaded into the membrane frame. The element installation procedure may require more than one operator as the elements weigh approximately 16 kg (35 lbs) dry and are 2 m (6.6 ft) in height. The elements must be placed into the slotted sections of the cage and pushed in horizontally as shown in Figure 11. Hold the elements by the filtrate carriers or top and bottom frame. Be careful not to pull on the membrane fibers or allow them to get caught on anything as they are pushed into the cage. Another operator should guide the element into the correct slot on the opposite side of the module, as shown in Figure 11.

Figure 11. Element installation (left) and slotted sections on bottom of cage (right)

3.2.6 Filtrate Adapter Installation

Ensure two elbows are properly connected and that all o-rings are present. Replace any deformed or torn o-rings. Carefully slide the top portion of the adapter into the opening in the main filtrate header. At the same time, insert the bottom portion of the adapter into the corresponding opening on each element. The longer elbow (horizontally) should be inserted into the element. If the adapter will not easily go into the element, use a small amount of glycerin or silicone grease. Be careful not to use too much and wipe off any excess grease after inserting the adapter. Do not use any mineral oil as it can damage the membrane. The element must be held in place from the opposite side or by the top and bottom frame when inserting the adapter so that the element is not pushed out of place. The adapter does not need to be pushed all the way into the element, but the o-rings should not be visible when the adapter is pushed in. Check around the entire adapter to ensure that all o-rings are completely inside the openings and that they have not been rolled or pinched in any place.

Take extra caution during the filtrate adapter installation to ensure that no damage occurs to the O-rings and to ensure that a proper seal is made between

the O-rings and the elements and filtrate header. Failure to properly install the filtrate adapters may result in an integrity problem.

Figure 12. Filtrate adapters in place

3.2.7 Filtrate Adapter Retainer Installation

To complete the module assembly, secure the filtrate adapter retainers onto the frame by bolting them to the top, as shown in `Figure 3`.

Upon completion, the assembled module will look like the one shown in

Figure 13. Assembled HYDRAsub-ES MBR module

4 Guide rail Installation

Guide rails are pipes or beams that guide each module into and out of the membrane tank during installation and removal. During installation, they help lower the module straight into the correct position as suggested in the module layout diagram given in the technical proposal. During removal, the guide rails provide a path to raise the modules straight out of the tank without damaging surrounding modules or other equipment. The guide rails are typically secured to the tank floor and to a supporting beam above the tank or to the top of the tank.

4.1 Guide rail Selection

The guide rail size will depend on the module class and is specified in the respective module drawings and specification sheets. For example, the HSM500 requires a 50A (2”) pipe (round or square). The height of the rail should extend vertically from the tank bottom to the top support structure. For the HSM500, where the minimum water level is 2.7 m (8.7 ft), the guide rails must be at least this tall in order to be visible above the water line. The guide rail material should be non-corrosive and able to handle the stress caused during installation, for example stainless steel (SS304 or SS316). Ensure that the guide rails are even along their entire length and do not bow during installation or operation of the system. This will prevent obstruction of the modules during installation or removal. The guide rails should also be leveled with shims so that they are vertically mounted in case the tank floor is uneven.

4.2 Guide rail Placement

The guide rails should be lined up so that they fit inside the guide rail supports on the module such that the module is in agreement with the module layout recommendations. The guide rail supports on the module are shown in Figure 3. They are located on each side of the module at the top of the membrane and diffuser cage.

Refer to DWG. HSM500-ES for exact location of the guide rail supports on a HSM500 for the guide rail support dimensions. These dimensions will vary for each module and can be found on the respective detailed drawings. The guide rail and module placement should be marked inside the tank before installation. First, the module boundaries should be marked for all modules in the tank. The module layout diagram recommended by Hydranautics, as shown in Figure 14, can be used as a guide. The X and A dimensions represent the extremities of the module.

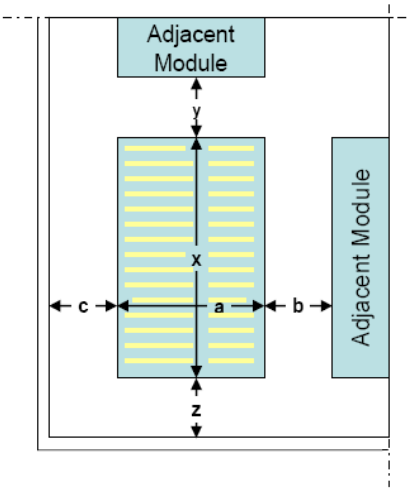

	m	ft
a	1.56	5.1
b	0.09	0.3
c	0.09	0.3
x	1.25	4.1
y	0.09	0.3
z	0.09	0.3

Figure 14. Module layout diagram (top view)

Next, the position of the guide rail bottom anchor should be marked such that the guide rail will fit (within tolerances) into the guide rail supports for each module. Once the tank floor is marked with the bottom anchor position, the top anchor position should be measured by using a plumb bob. The position at which the guide rail will be secured to the top anchor should be marked on the top support structure at the point where the plumb bob is completely vertical. This will ensure the guide rails are at a 90º angle with the tank floor so as not to obstruct the installation or removal process.

4.3 Guide rail Anchoring

The guide rails must be anchored at the top and bottom of the tank. The top support structure should be chosen based on the OEM's preference and experience. See Figure 15 for examples of anchoring guide rails to the top of the tank. The top anchor may also be bolted instead of welded as shown in the examples.

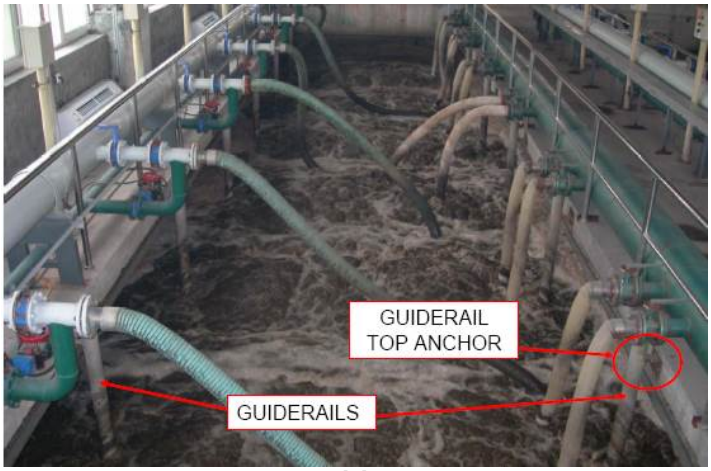

(a)

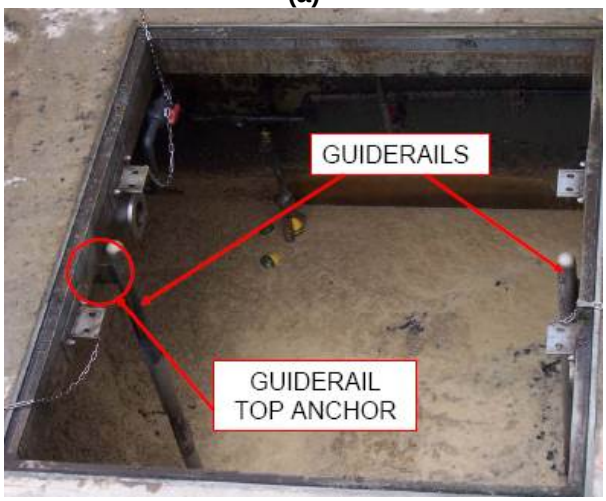

(b)

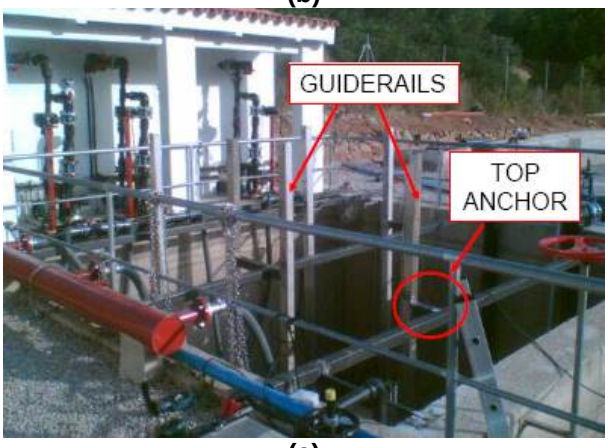

(c)

Figure 15. (a) Guide rails are welded to the top anchor which is bolted to the top of a concrete basin, (b) guide rails are welded to the top anchor which is welded to a steel frame around the hatch lid of tank, and (c) guide rails are welded to a steel beam that runs across the top of the tank

The bottom anchoring method will depend on the type of tank used and is up to the OEM to determine the best way to accomplish this. The bottom of the guide rail may be bolted or welded to the bottom of the tank. The OEM must ensure that the guide rail is secured such that the weight of the module can be supported by each guide rail. Figure 16 shows how the bottom of the guide rail may be anchored to the tank floor.

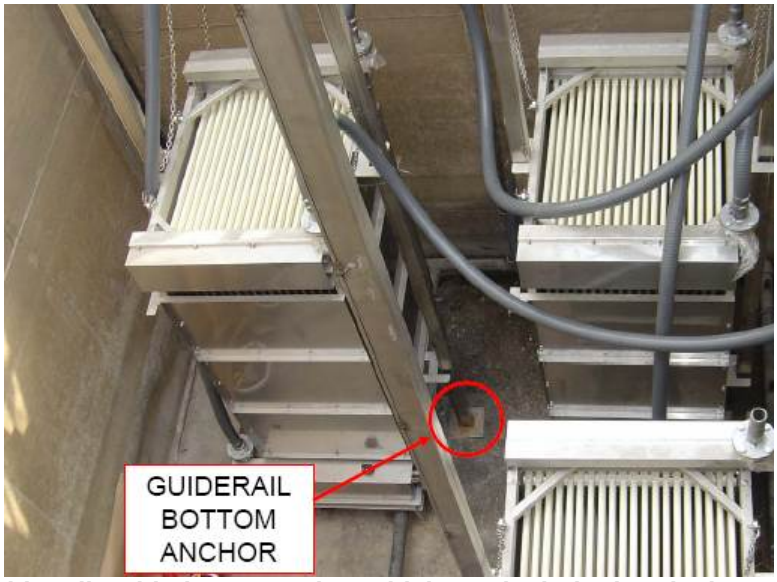

Figure 16. Guide rail welded to an anchor which can be bolted to the bottom of the tank

After the guide rails are installed, but before it is permanently anchored, check the level of the beam to ensure it is not creating an angle that will prevent the proper insertion or removal of the modules.

5 Module Installation

Once the modules are assembled and guide rails are installed, the modules are ready to be installed into the membrane tank. Ensure the tank is free of debris such as PVC or metal pipe shavings, spare parts (nuts, bolts, washers, etc.) and sharp objects before installing the membrane modules. Preferably, the system integrity should be tested prior to installation of the modules. The module isolation valves should be closed and all piping and fittings up to that point should be subjected to a pressure decay test to detect any leaks, cracks, or loose fittings, if present. Any changes or repairs after installation will cause the membranes to be exposed to the ambient conditions if not in an enclosed area.

5.1 Lifting the Module

To lift the module, attach shackles, eyebolts or loop cable through each of the four eyelets on top of the membrane cage. Attach a chain or cable rated to hold the specified dry weight (for new, unused modules) to each shackle or eyebolt. For a used, wet module, choose a chain or cable rated to hold the specified wet weight. The specified dry and wet weights for each module class can be found on the respective module drawing or specification sheet. A safety factor of at least 1.5 (relative to the wet weight) should be used to ensure the chain or cable does not break. Attach the other end of each chain or cable to the lifting device. The lifting device can be a crane (hydraulic truck, gantry, jib, monorail), hoist or other suitable piece of equipment. The lifting device should be rated to support the wet weight of the module plus a safety factor of at least 1.5. Make sure that there is enough height clearance for the entire module to be lifted into the tank. Total module heights for each module class are given in their respective specification sheets and drawings.

Figure 17. Lifting the module with chains (left) and a hydraulic truck crane (right)

Slowly lift the module a few inches off the ground and ensure that the module is securely attached to the lifting points and that the membrane cage is securely attached to the diffuser cage before lifting any higher. If the module is secure, continue lifting the module. Do not allow the module to sway and do not stand underneath the module as it is being lifted or lowered.

5.2 Module Placement

Move the module into the tank and onto the guide rails. This may require operator assistance. Gently lower the module down onto the tank floor with the guide rails in each support bracket. Check that the modules are level so that air scour is uniform during operation. Each module should be level within +/- 1.5 mm/1000mm module length. Within one train, the modules should be level with each other within +/-3 mm/1000 mm of distance between air scour supply pipes. Detach the chains or cables either directly from the lifting points on the module or from the lifting device. If possible, leave the cable or chain connected to the module lifting points and secure the other end to an easily accessible area outside of the tank and above the water level (see Figure 18). This will allow the modules to be removed later, if needed, without having to drain the tank down and re-connect at the lifting points. Make sure that the cable is tight and cannot move loosely inside the tank where it can damage the membrane or any other equipment and instrumentation.

Figure 18. Securing lifting chains to guide rails (left) and chains tied to rail on outside of tank (right)

5.3 Air and Filtrate Hose Connections

The air and filtrate hose connections should be accessible above the water line in the tank so that connections can be made or removed while the tank is full. The air connection on the diffuser cage should be made prior to the module being lowered into the tank. If possible, the end of the hose or pipe should be easily accessible along the walkway or side of the tank so that the connection to the air header can be made without going inside the tank, as shown in Figure 19. Air connections are circled. Consider tying a rope to the loose end of the hose so that it can be secured to the side of the tank while the module is being lowered in order to prevent sludge from entering the hose.

The filtrate connection on the membrane cage should also be made prior to lowering the module into the tank. Similarly, the end of the filtrate hose should be secured near the side of the tank or where it can be easily reached, as shown in Figure 19. The filtrate connections are indicated by rectangles.

Figure 19: Filtrate and Air Hose Connections

6 Module Maintenance and Service

After the modules have been assembled and installed, system integrity has been confirmed according to TSB410, and the system has been started up according to TSB400, operational issues may need to be resolved. This section addresses how to resolve those issues.

6.1 Troubleshooting Guide

To determine if there is a problem with the membrane system, use the troubleshooting guide in Table 2. Before assuming there is an issue with one process parameter, first check that all other process parameters, such as air flows, feed flows, etc., are within the recommended range. It is recommended that actions in each category are performed in succession for time efficiency purposes.

Table 2. Troubleshooting Guide

Item	Problem	Possible Cause	Recommended Action
Filtrate Pumps, Backwash Pumps	1. Pump not reaching design flow rate	a. Insufficient suction head. (Noise may or may not be present)	• Ensure that suction line module isolation and pump isolation valves are fully open and line is unobstructed
		b. Entrained air. Air leak from atmosphere on suction side.	• Check suction line gaskets • Check pipe and hose connections • Check air removal system
		c. Direction of rotation wrong	• Adjust the electrical leads on the motor to ensure that the rotation direction is correct
		d. Impeller clearance too large	• Adjust impeller clearance
		e. Valve on discharge is throttled	• Adjust degree of valve throttle
		f. Module isolation valve(s) are closed	• Open module isolation valve(s)
	2. No discharge or flow with pump running	a. Not properly primed	• Repeat priming operations, recheck instructions • If pump has been running dry, disassemble and inspect pump before operation. Refer to pump vendor manual.
		b. Direction of rotation wrong	• Adjust the electrical leads on the motor to ensure that the rotation direction is correct
		c. Discharge valve is closed	• Open valve
	3. Excessive noise from motor	a. Bearing damage due to improper lubrication identified by one or more of the following: • Abnormal bearing temperature rise • A stiff cracked grease appearance • A brown or bluish discoloration of the bearing races	• Ensure lubricant is clean • Ensure proper amount of lubricant is used • Ensure the proper grade of lubricant is used • Refer to pump vendor manual

	4. Excessive noise from pump	a. Cavitation- insufficient suction head	• Ensure that pump suction isolation valve is fully open and line is unobstructed • Refer to pump vendor manual
		b. Impeller rubbing	• Check and adjust impeller clearance • Check outboard bearing assembly for axial end play • Refer to pump vendor manual
Trans-membrane Pressure (TMP)	1. High TMP/high set point reached	a. Air is trapped in filtrate lines (visually check in rotameter, if possible)	• Ensure air removal system is functioning properly • Check filtrate connections on suction side of filtrate pump for leaks • Do integrity test on system according to TSB410
		b. Poor sludge quality	• Check MLSS concentration in membrane tank and ensure it is in the proper range • Check viscosity of sludge in membrane tank and ensure it is in the proper range • Perform filterability test (TSB404) and ensure it is within recommended range • Ensure feed water limitations are being adhered to (i.e. oil and grease concentrations, DO and sBOD concentrations in the membrane tank, other chemicals from pre-treatment being overdosed, etc.),
		c. Membrane is fouled	• Perform weekly CEB • Check pressure indicators on each module to determine if one module is operating at higher TMP than others • Ensure membrane aeration rate is in specified range to all modules. • Aerate affected modules for 1-3 hours at maximum recommended flow rate without filtration • Perform CIP, if needed (refer to Instruction Manual for cleaning procedures) • Contact Hydranautics Customer Service
Filtrate Quality	1. High turbidity reading (Abnormal for system or >0.3 NTU on a consistent basis)	a. Turbidity meter needs to be calibrated	• Check online readings against handheld meter readings • Perform turbidity instrument calibration according to vendor manual
		b. Filtrate lines (around turbidimeter sampling point) are dirty	• Check rotameters or any clear section of piping or hosing, if used • Ensure that the flowrate to the Turbidimeter is in the manufacturer's specified range. • Flush filtrate lines with a chlorine solution

		c. Air bubbles present in filtrate lines	• Visually check for air bubbles, if possible • Ensure air removal system is functioning properly • Check filtrate connections on suction side of filtrate pump for leaks • Do integrity test on system according to TSB410
		d. Leaks in piping or connections (below water level)	• Perform integrity test according to TSB410 • Repair any leaks
		e. Broken fiber(s)	• Identify train and module responsible for high turbidity according to TSB410. • Remove affected modules from system (refer to TSB411 section 6.3) • Repair damaged fibers according to TSB402
Membrane Air Flow	1. Low or non-uniform air flow	a. Valve(s) on discharge side of blower is throttled	• Open valve(s) on discharge side of blower and check air flow
		b. Flow control valve is throttled	• Open valve manually and check maximum flow
		c. Blower is not producing enough air flow	• Ensure there is power to blower • Ensure blower inlet is not obstructed and clean. Replace filter if necessary. • Ensure outlet piping is not obstructed • Ensure there are no leaks in the piping or air connections • Refer to blower vendor manual • Contact blower vendor for assistance
		d. Sludge build up on air diffusers	• Increase air flow to maximum value to try and flush out sludge deposition • Employ air diffuser backwash, if applicable (only for pipe style diffusers) • Remove module and inspect and clean air diffusers per TSB412
		e. Blower damaged	• Refer to blower vendor manual • Contact blower vendor for assistance
	2. High air pressure	a. Air flow restricted	• Open valve(s) on discharge side of blower and check air pressure
		b. Air pressure regulators not functioning	• Check, reset and replace if necessary
		c. Sludge build up on air diffusers	• Increase air flow to maximum value to try and flush out sludge deposition • Employ air diffuser backwash, if applicable • Remove module and inspect and clean air diffusers per TSB412
		c. Blower damaged	• Refer to blower vendor manual • Contact blower vendor for assistance

Backwash Pressure	1. High backwash pressure (above 2 psig)	a. Backwash flow too high	• Check that total flow to membranes does not exceed recommended flow given by Hydranautics • Adjust pump speed or flow control valve, if necessary
		b. Membrane is fouled	• Check pressure indicators on each module to determine if one module is operating at higher TMP than others • Aerate affected modules for 1-3 hours at maximum recommended flow rate without filtration • Attempt CEB again or repeat above procedures as needed
Vacuum Pumps	1. Pump will not turn on start-up	a. Alarm setting has turned off pump	• Ensure cause of alarm is corrected. • Clear alarm
		b. No power to pump	• Ensure pump is turned on
		c. Overload/breaker tripped	• Reset overload/breaker
		d. Rotor is obstructed	• Remove pump cover and check if rotor turns freely
		e. If the motor fails to turn, ensure that it isn't a motor problem	• Check wiring- if motor is three phase and wired as single phase, motor can burn out
	2. No discharge or flow with pump running	a. Valves on inlet or outlet closed	• Open valves
		b. Direction of rotation wrong	• Adjust the electrical leads on the motor to ensure that the rotation direction is correct
		c. Insufficient water seal	• Check water seal; water must be fed continuously into the pump • Fill pump cavity with enough water to create the seal
	3. Poor pump performance, low vacuum	a. Pump may not be getting enough water	• Check vacuum pump while running by sealing off inlet piping and reading vacuum at the pump suction. If high vacuum is achieved, look for leaks in vacuum piping
		b. Internal parts may be worn or damaged	• If high vacuum is not achieved upon closing inlet valve, the problem lies in the vacuum pump (assuming piping between isolation valve and pump suction is free of leaks) • Adjust water supply and observe performance • Remove pump cover and check for wear
		c. Pump suction open to atmosphere	• Find leak and seal
	4. Pump unusually noisy	a. Motor bearings are worn or damaged	• Remove cover and rotate rotor by hand. If noise is detected, replace bearings.
	5. High amperage draw	a. Internal rubbing of rotor with stationary parts	• Shut off pump and rotate by hand to see if rotor turns freely. Ensure pump is locked out
Chemical Metering	1. Pump does not prime in spite of full stroke movement and	a. Crystalline deposits formed in piping/check valves due to drying out of chemicals	• Remove suction hose from supply tank and rinse thoroughly with clean water. May also need to disassemble and clean valves

Pumps	bleeding	b. Valve closed on discharge or suction side of pump	• Open valves
		c. Check valve is installed in the wrong direction	• Reverse direction of check valve
	2. Float switch in supply tank does not switch off pump at minimum tank level	a. Float is blocked	• Remove deposits and clean float
	3. Pump does not meter although display shows pump is metering	a. The stroke length is set to zero or no value is set	• Adjust the stroke length on pump
		b. The pump is in "STOP" mode	• Press Start/Stop button until display indicates pump is in "ON" mode
	4. Fluid is seeping from top/back plate	a. Screws are loose	• Tighten screws on the wet end • If needed, replace diaphragm

6.2 Module or Train Isolation

Please refer to TSB410 for module and train isolation procedure.

6.3 Module Removal

6.3.1 Air and Filtrate Connections

Disconnect the air and filtrate lines at the main headers above the water level. If hoses are used, care should be taken to keep the end of the hose out of the water when it is removed so that the line does not get contaminated. Secure the ends of the hoses so that they do not interfere with lifting the module or swing during removal, creating a safety hazard.

Figure 20. Removing connection from module to air header

6.3.2 Module Removal from Tank

If the chains or cables used to install the module were secured to the outside or top of the tank, then detach them and connect them to the lifting device. The module can then be brought up out of the water along the guide rails. Take care

to prevent the chains or cables from catching any other part of the tank, module, or on other equipment while removing.

Figure 21. Example of a chain getting caught on the guide rail support

If there are no cables attached to the lifting points, the tank must be drained down enough to reach the eyelets and the connection must be made. Refer to section 5.1 for connection and lifting instructions.

As the module is being lifted out of the tank, excess sludge may be rinsed off the outside of the module. To minimize the impact on the biological system, use MBR filtrate to rinse off the module.

6.3.3 Module Conditions Outside of Tank

The module should be placed on a stable, level floor that is strong enough to support the wet weight of the module and put in a contained area. The membranes should be kept wet and, if possible, in the shade, spraying or dousing with water every 20-30 minutes. Increase the spraying frequency to every 10-15 minutes if the membranes are directly in the sun or ambient temperatures are high (above 30 deg C). Do not allow the membranes to sit outside for longer than 24 hours without wetting them. Keep the membranes away from sharp edges or debris. Do not expose the membranes to freezing conditions. Disposal of waste should be handled according to local regulations.

6.4 Module Inspection

If there is a problem that requires a visual inspection of the module and/or its parts, the module must be disassembled and analyzed. Refer to the detailed module drawings for the following disassembly instructions.

6.4.1 Module Disassembly

Remove the filtrate adapter retainers on both sides of the module by unscrewing the nuts and bolts along the top and bottom of each retainer. Keep all nuts, bolts, and washers together in a small container.

After visual inspection is complete, assemble module in accordance with section 3.2. Install module into tank as described in chapter 5.

6.4.2 Filtrate Connection

Remove the connection on each filtrate outlet of the module. Check the connection condition. For example, if a flange has been mounted to the cage, check the condition of the gasket. Look inside the outlets and lines to check if any sludge has leaked into the filtrate lines. If sludge has leaked into filtrate lines, rinse it out before reconnecting the filtrate hoses to the module.

6.4.3 Air Connection

Remove the connections on the diffuser. Check the connection condition. For example, if a flange has been mounted to the cage, check the condition of the gasket.

6.4.4 Filtrate Adapters

Before removing the adapters, note if any of the o-rings are sticking out of the elements or filtrate header that may cause a break in the seal. Also, note any stretching or deformities in the o-rings. Remove the filtrate adapters by gently pulling out the entire piece from the filtrate adapter receptacle. Replace any o-rings that are deformed or do not fit firmly around the adapter. Check inside the adapters for sludge residue. Rinse off adapters after visually inspecting and keep in a separate, clean container so that sludge or debris does not get inside the adapters.

Figure 22. Removing filtrate adapters

6.4.5 Elements

The element removal procedure may require more than one operator as the elements may weigh more than 32 kg (70 lbs) when wet and are 2 m (6.6 ft) in height. The elements must be removed from the slotted sections of the cage and pulled out horizontally as shown in Figure 23. Hold the elements by the filtrate carriers or top and bottom frame. Be careful not to pull on the membrane fibers or allow them to get caught on anything as they are removed from the cage. The elements may need to be rinsed with water and any hair or fibrous materials that have accumulated on the membrane may need to be removed. This can be done by very carefully cutting or pulling the hair out while taking care not to damage the membrane fibers.

Remove the elements one by one, looking for membrane fiber breaks or other damage to the element. There may be loose fibers that have been cut short and repaired prior to shipment. Check the ends of any previously repaired fibers to ensure the epoxy plug is intact. If any damaged fibers are found, repair them according to TSB402. If any other damage to the element is found, such as a crack in the frame or damage to the potting, please contact Hydranautics Technical Support immediately. The frame may be fixed by applying epoxy to the plastic part of the frame. If spare elements are available, it is recommended to replace the damaged element.

Figure 23. Removing element during module inspection

6.4.6 Air Diffusers

After separating the membrane cage from the diffuser cage, remove the air diffusers from the saddle and look inside the diffuser pipe to determine if any sludge has entered through the inlet side of the diffuser. Check the o-rings on the diffuser pipe and ensure a good seal is formed with the air header. Check the rubber membrane on the outside of the diffuser pipe and note any deposits or damage to the membrane. Consult TSB412 for cleaning of the diffusers.

For answers to any questions about this document please contact Hydranautics Customer Service. For assistance with other issues that have not been covered in this document, please contact Hydranautics Customer Service before taking action to resolve the issue.

Hydranautics- A Nitto Denko Company
401 Jones Rd.
Oceanside, CA 92058
Tel: (760) 901-2500
Fax: (760) 901-2578
email: info@Hydranautics.com

Appendix A- HYDRAsub®-ES MBR Module Drawing

THIS DRAWING CONTAINS PROPRIETARY INFORMATION AND DESIGNS OWNED BY HYDRANAUTICS. ALL DESIGN, MANUFACTURING, REPRODUCTION, USE, PATENT RIGHTS, AND SALES RIGHTS REGARDING THE SAME ARE EXPRESSLY RESERVED BY HYDRANAUTICS.

REVISION HISTORY				
REV	DESCRIPTION	DATE	DRAWN	APPROVED
A	NEW RELEASE	10/25/2010	P. BEHM	I. SHELBY
B	FILTRATE HEADER AND DIFFUSER MOUNTING MODIFICATIONS	3/10/2011	B.FREEMAN	
C	DIFFUSER, FILTRATE HEADER, AIR LINE SUPPORT, INSTALLATION GUIDE MODIFICATIONS	7/21/2011	B.FREEMAN	

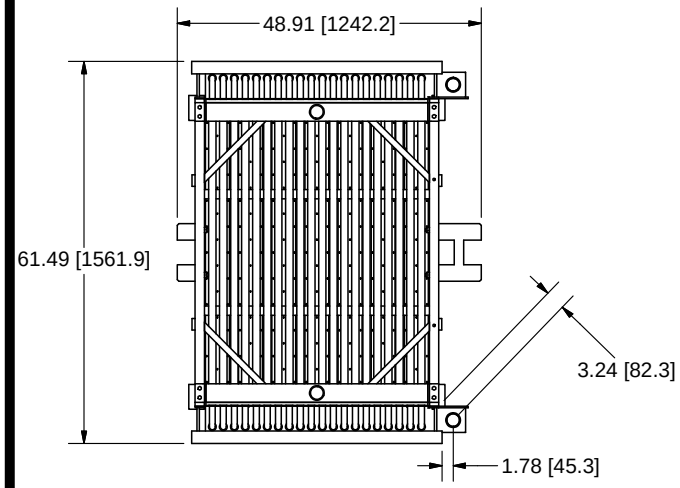

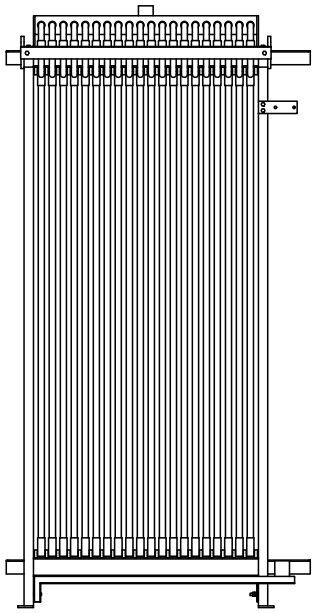

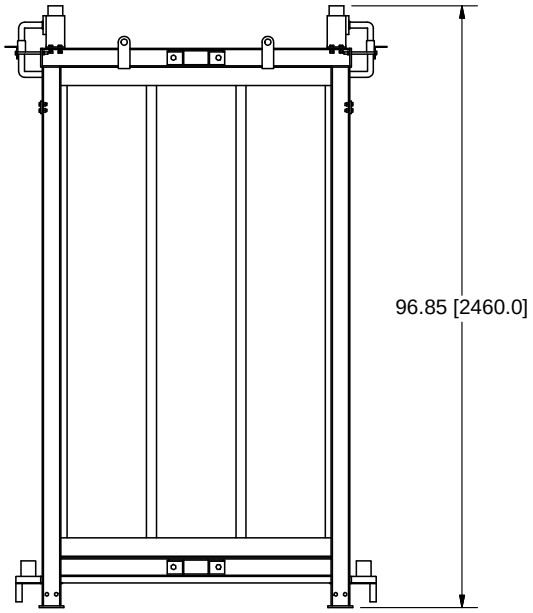

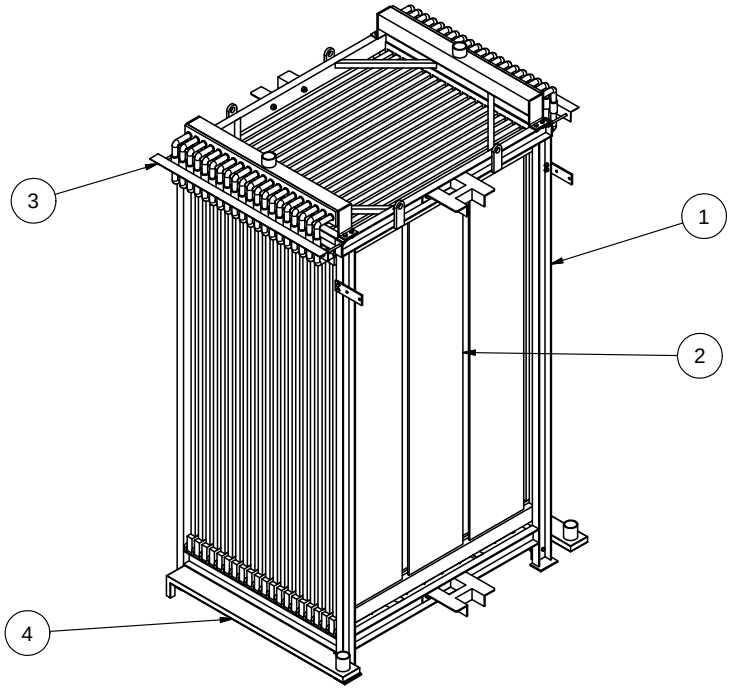

ITEM	QTY	PART NUMBER	DESCRIPTION
1	1	FRAME SUB ASSEMBLY	SS-304, C-CHANNEL, WELDED
2	20	ELEMENT SUB ASSEMBLY	HYDRASUB ELEMENT
3	2	PERMEATE RETAINER SUB ASSEMBLY	SS-304 SUPPORT FOR PERMEATE ADAPTERS
4	1	SHEET DIFFUSER ASSEMBLY	SHEET METAL, 0.078" THICK

Parts List

UNLESS OTHERWISE SPECIFIED TOLERANCES ON

1 PLACE DEC ±0.1	2 PLACE DEC ±0.03	3 PLACE DEC ±0.010	ANGLES ±0.5°

1. DIMENSIONS ARE IN INCHES
2. REMOVE BURRS AND SHARP EDGES 0.015 MAX
3. MACHINED FILLET RADII 0.015-0.030
4. MACHINED DIAMETERS ON A COMMON CENTERLINE MUST BE CONCENTRIC WITHIN 0.005 T.I.R.
5. NORMALITY, SQUARENESS, AND PARALLELISM OF MACHINED SURFACES 0.002 PER INCH, TO A MAXIMUM OF 0.012 INCHES FOR A SINGLE SURFACE

NITTO DENKO

DRAWN: P. BEHM — DATE: 8/20/2010
APPROVED: I. SHELBY — DATE: 10/25/2010
ADDITIONAL NOTES

HYDRANAUTICS
401 Jones Rd.
Oceanside, CA U.S.A.
Phone: (760) 901-2500, Fax: (760) 901-2664

TITLE
500 SQ. METER HYDRASUB MODULE

SIZE B | DWG NO HSM500-ES | REV C
SCALE 1:1 | SHEET 1 OF 1

IFM – CABLES

ifm electronic

Montagehinweis / Mounting instruction / Instruction de montage

Verbinden Sie den Steckverbinder mit dem Sensor, der Pfeil zeigt die richtige Lage der Kodierung. Um die angegebene Schutzart zu gewährleisten, muss die Überwurfmutter mit einem Anzugsdrehmoment von 0,6 Nm (handfest) bis 1,5 Nm (Schlüsselmontage) angezogen werden.

Connect the connector to the sensor; the arrow indicates the right position of the coding. To ensure the indicated protection rating, the coupling nut must be tightened with a tightening torque from 0.6 Nm (hand-tight) to 1.5 Nm (using a torque wrench).

Raccorder le connecteur au capteur, la flèche indique la bonne direction du codage. Afin d'assurer le degré de protection indiqué, il faut serrer l'écrou avec un couple de serrage de 0,6 Nm (à la main) à 1,5 Nm (avec une clé).

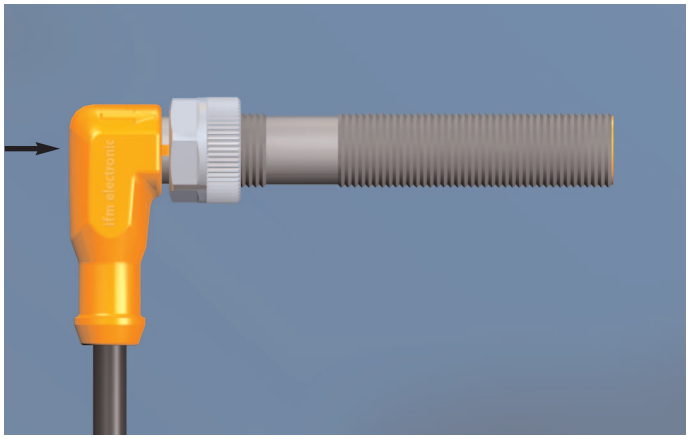

Zur Demontage lösen Sie die Überwurfmutter und drücken gleichzeitig den Steckverbinder gegen den Sensor.

For removal loosen the coupling nut and at the same time press the connector against the sensor.

Pour le démontage desserrer l'écrou et presser simultanément le connecteur contre le capteur.

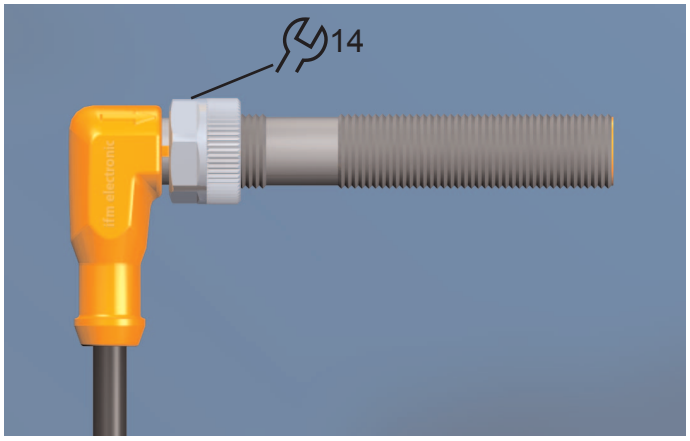

Beim Einsatz in rauen Umgebungen ziehen Sie die Überwurfmutter mit einem Schlüssel (SW14) eine Raste weiter fest, um Schock- und Vibrationsfestigkeit zu erhöhen. Zur Demontage verwenden Sie ebenfalls einen Schlüssel (SW14).

For applications in harsh environments tighten the coupling nut by turning it one notch further with a key (width across flats 14) to increase shock and vibration resistance.
For removal also use a key (width across flats 14).

Pour les applications en environnement agressif serrer l'écrou en le tournant d'un cran d'arrêt supplémentaire, avec une clé (cote sur plat 14), afin d'augmenter la tenue aux chocs et vibrations. Utiliser également une clé (cote sur plat 14) pour le démontage.

Sachnr. 704149/01 12/2007

IFM – COMPRESSED AIR FLOWMETERS

ifm electronic

CE

Operating instructions
Compressed air meter

efector300

SD0523

UK

80229559 / 00 06 / 2015

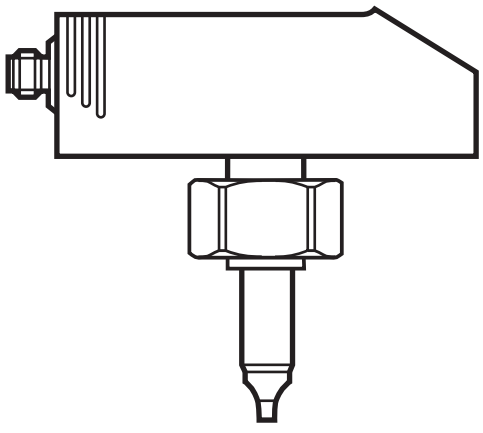

Contents

1 Preliminary note 4
1.1 Symbols used 4
2 Safety instructions 5
3 Functions and features 5
4 Function 6
4.1 Process measured signals 6
4.2 Volumetric flow monitoring 6
4.3 Consumed quantity monitoring 6
4.3.1 Consumed quantity monitoring with pulse output 7
4.3.2 Consumed quantity monitoring with preset counter 7
4.4 Temperature monitoring 7
4.5 Volumetric flow or temperature monitoring / switching function 8
4.5.1 Hysteresis function 8
4.5.2 Window function 8
4.6 Volumetric flow or temperature monitoring / analogue function 9
4.7 Adjustment to the internal pipe width 9
4.8 Set standard conditions of the volume flow 9
4.9 Low flow cut-off (LFC) 10
4.10 Customer-specific calibration (CGA) 10
5 Installation 10
5.1 Installation location 10
5.2 Installation conditions 11
5.3 Installation position 11
5.4 Installation example using the process adapter E40195 12
6 Electrical connection 13
7 Operating and display elements 14
8 Menu 15
8.1 Menu structure 15
8.2 Explanation of the menu 16
8.2.1 Extended functions (1) 16
8.2.2 Extended functions (2) 17
9 Parameter setting 17

9.1 IO-Link 17
9.1.1 General information 17
9.1.2 Device-specific information 17
9.1.3 Parameter setting tools 17
9.1.4 Adjustable parameters via IO-Link 17
9.2 Parameter setting in general 18
9.2.1 Extended menu 1 18
9.2.2 Extended menu 2 19
9.2.3 Locking / unlocking 19
9.2.4 Timeout 19
9.3 Settings for volumetric flow monitoring 20
9.3.1 Adjustment to the internal pipe width 20
9.3.2 Configure limit value monitoring with OUT1 20
9.3.3 Configure limit value monitoring with OUT2 20
9.3.4 Configure analogue value for volumetric flow 20
9.4 Settings for consumed quantity monitoring 21
9.4.1 Configure quantity monitoring via pulse output 21
9.4.2 Configure quantity monitoring via the preset counter 21
9.4.3 Setting the pulse value 22
9.4.4 Configure program-controlled meter reset 22
9.4.5 Deactivate meter reset 23
9.4.6 Configure meter reset using an external signal 23
9.5 Settings for temperature monitoring 23
9.5.1 Configure limit value monitoring with OUT2 23
9.5.2 Configure analogue value for temperature 23
9.6 User settings (optional) 24
9.6.1 Set standard unit of measurement for volumetric flow 24
9.6.2 Configure standard display 24
9.6.3 Set output status in fault condition 24
9.6.4 Set measured value damping 24
9.6.5 Set low flow cut-off 25
9.6.6 Calibrate curve of measured values 25
9.6.7 Reset calibration data 25
9.6.8 Set standard pressure which serves as a reference for measured and display values for volumetric flow 25
9.6.9 Set standard temperature which serves as a reference for measured and display values for volumetric flow 25

9.7 Service functions 25
9.7.1 Read min/max values for volumetric flow 25
9.7.2 Reset all parameters to factory setting 26
10 Operation 26
10.1 Read set parameters 26
10.2 Change display unit in the Run mode 26
10.3 Fault indications 27
10.4 General operating conditions 27
11 Technical data and scale drawing 27
12 Factory setting 27

1 Preliminary note

1.1 Symbols used

▶ Instructions

> Reaction, result

[…] Designation of pushbuttons, buttons or indications

→ Cross-reference

Important note
Non-compliance can result in malfunction or interference.

Information.
Supplementary note.

2 Safety instructions

- Please read this document prior to set-up of the unit. Ensure that the product is suitable for your application without any restrictions.
- If the operating instructions or the technical data are not adhered to, personal injury and/or damage to property can occur.
- Ensure before mounting the components into or removing them from the compressed air system that the installation is at a standstill and no pressure is applied.
- Improper or non-intended use may lead to malfunctions of the unit or to unwanted effects in your application. That is why installation, electrical connection, set-up, operation and maintenance of the unit must only be carried out by qualified personnel authorised by the machine operator.
- In order to guarantee the correct condition of the device for the operating time the device must only be used in media to which the wetted parts are sufficiently resistant (→ Technical data).
- The responsibility whether the measurement devices are suitable for the respective application lies with the operator. The manufacturer assumes no liability for consequences of misuse by the operator. Improper installation and use of the devices result in a loss of the warranty claims.

3 Functions and features

The unit monitors the standard volume flow of compressed air in industrial use.

It detects the 4 process variables flow velocity, volumetric flow quantity, consumed quantity, medium temperature.

- Application: compressed air systems in industrial use.
- All indications apply for standard volume flow to DIN ISO 2533, i.e. volume flow at 1013 hPa, 15 °C and 0 % relative air humidity.
  The unit can be set to different standard conditions (→ 9.6.8 and → 9.6.9).
- The general operating conditions of compressed air equipment apply.

4 Function

4.1 Process measured signals

- The unit displays the current process values.
- It generates 2 output signals according to the parameter setting.

OUT1: 4 selection options	Parameter setting
- Switching signal for volumetric flow quantity limit value	(→ 9.3.2)
- or switching signal for flow velocity	(→ 9.3.2)
- or pulse signal for quantity meter	(→ 9.4.1)
- or switching signal for preset counter	(→ 9.4.2)

OUT2: 6 selection options	Parameter setting
- Switching signal for volumetric flow quantity limit value	(→ 9.3.3)
- or switching signal for flow velocity limit value	(→ 9.3.3)
- or switching signal for temperature limit value	(→ 9.5.1)
- or analogue signal for volumetric flow quantity	(→ 9.3.4)
- or analogue signal for flow velocity	(→ 9.3.4)
- or analogue signal for temperature	(→ 9.5.2)
If not used as an output, OUT2 (pin 2) can instead be used as an input for an external reset signal.	(→ 9.4.6)

4.2 Volumetric flow monitoring

The volumetric flow is monitored by a calorimetric measuring system, the measured signals are evaluated by the electronics.

- 2 switching signals for volumetric flow limit values can be provided (output 1 and output 2). On the switching functions → 4.5.
- An analogue signal which is proportional to the volumetric flow (4...20 mA) can be provided on output 2. On the analogue functions → 4.6.

4.3 Consumed quantity monitoring

The unit has an internal quantity meter which continuously totals the volumetric flow quantity. The sum corresponds to the current consumed quantity since the last reset.

- The current meter reading can be displayed.

- In addition the value before the last reset is saved. This value can also be displayed.
  The meter saves the totalled consumed quantity every 10 minutes. After a power failure this value is available as the current meter reading. If a time-controlled reset is set, the elapsed time of the set reset interval is also saved. So the possible data loss can be maximum 10 minutes.
- Overflow: After the maximum value (9 999 999 Nm^3) the meter is reset to 0.

The meter can be reset as follows:

- Manual reset (→ 9.4.4).
- Time-controlled automatic reset (→ 9.4.4).
- External input signal on pin 2 (→ 9.4.6).

4.3.1 Consumed quantity monitoring with pulse output

Output 1 provides a counting pulse each time the value set in [ImPS] is reached (→ 9.4.1).

4.3.2 Consumed quantity monitoring with preset counter

2 types of monitoring are possible:

- Time-dependent quantity monitoring.
  - Settings: [ImPS] = quantity x, [ImPR] = [no], [rTo] = time t.
  - If the quantity x is reached during t, output 1 switches and remains switched until the counter is reset.
  - If the quantity x is not reached after the time t has elapsed, the meter is automatically reset and counting starts again; output 1 does not switch.
- Non time-dependent quantity monitoring.
  - Settings: [ImPS] = quantity x, [ImPR] = [no], [rTo] = [OFF].
  - If the quantity x is reached, output 1 switches and remains switched until the counter is reset.

4.4 Temperature monitoring

- A switching signal for temperature limit values can be provided on output 2. On the switching functions → 4.5.
- An analogue signal which is proportional to the temperature (4...20 mA) can be provided on output 2. On the analogue functions → 4.6.

4.5 Volumetric flow or temperature monitoring / switching function

OUTx changes its switching state if it is above or below the set switching limits (SPx, rPx). The following switching functions can be selected:

4.5.1 Hysteresis function

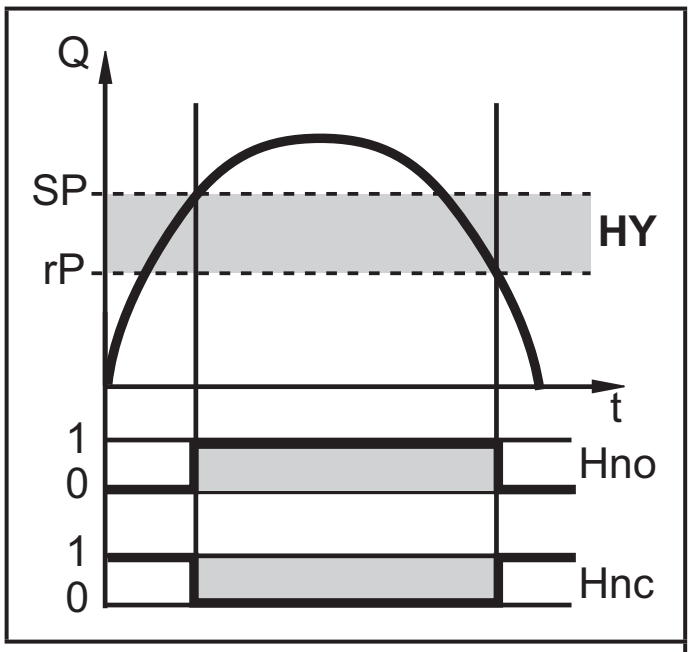

HY = hysteresis

Normally open: [OUx] = [Hno]

Normally closed: [OUx] = [Hnc]

First the set point (SPx) is set, then the reset point (rPx) with the requested difference.

4.5.2 Window function

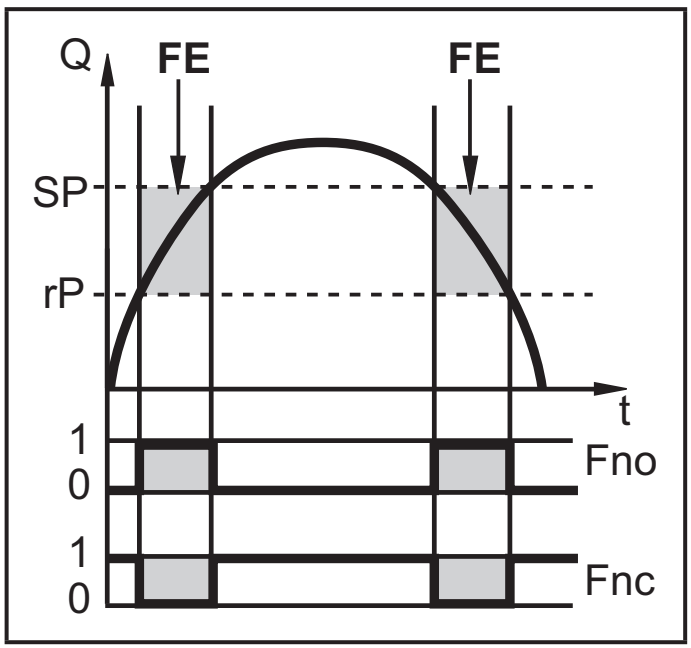

FE = window

Normally open: [OUx] = [Fno]

Normally closed: [OUx] = [Fnc]

The width of the window can be set by means of the difference between SPx and rPx.
SPx = upper value
rPx = lower value.

4.6 Volumetric flow or temperature monitoring / analogue function

- Analogue start point [ASP] determines at which measured value the output signal is 4 mA.
- Analogue end point [AEP] determines at which measured value the output signal is 20 mA.

Minimum distance between [ASP] and [AEP] = 25 % of the final value of the measuring range.

Example of volumetric flow monitoring:

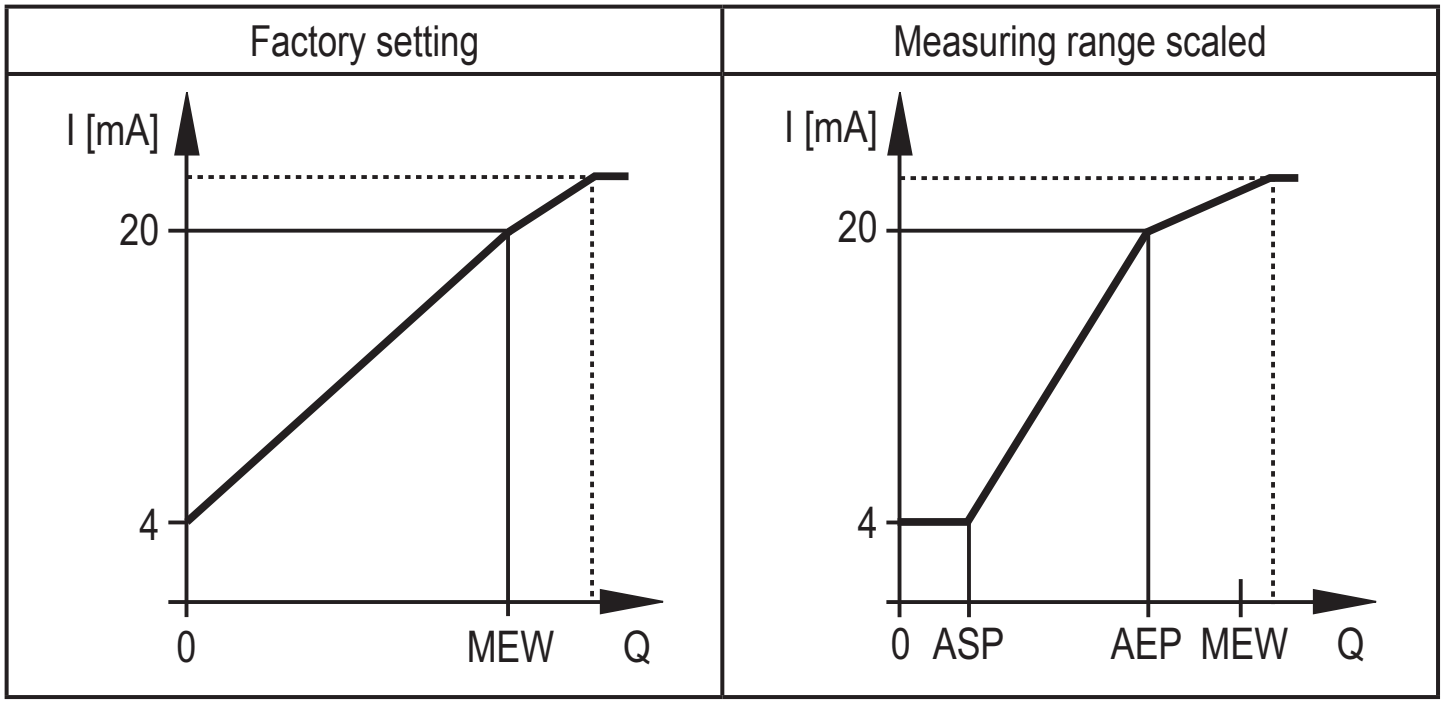

MEW = final value of the measuring range
In the set measuring range the output signal is between 4 mA and 20 mA.
It is also indicated:
Volumetric flow above the measuring range: output signal > 20 mA.

4.7 Adjustment to the internal pipe width

The unit can be used for different internal pipe widths. The selected internal pipe width must be set via the menu (→ 9.3.1 Adjustment to the internal pipe width).

Set the internal pipe widths before defining values for switching limits (SPx, rPx) and analogue limit values (ASP, AEP).

4.8 Set standard conditions of the volume flow

The unit is adjusted to a standard volume flow to DIN ISO 2533, i.e. volume flow at 1013 hPa, 15 °C and 0 % relative air humidity.

The unit can be set to different standard conditions:

- Via the menu item [rEF.P] the standard pressure is set, which serves as a reference for the measured and display values for volumetric flow (→ 9.6.8).
- Via the menu item [rEF.T] the standard temperature is set, which serves as a reference for the measured and display values for volumetric flow (→ 9.6.9).

4.9 Low flow cut-off (LFC)

With this function small volumetric flow quantities can be ignored (→ 9.6.5). Flows below the LFC value have no effect on the display and output signals.

4.10 Customer-specific calibration (CGA)

The customer-specific calibration allows changing the gradient of the curve of measured values. It influences the display and the outputs.

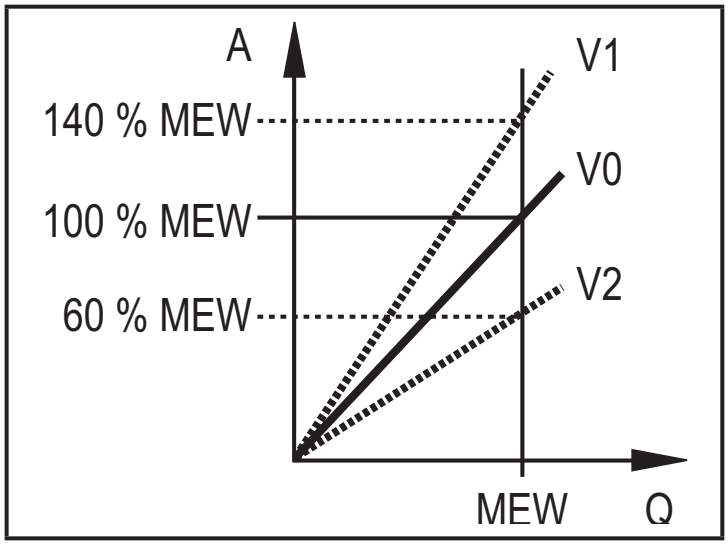

A	Operating value for display and output signals
Q	Volumetric flow
MEW	Final value of the measuring range
V0	Curve of measured values with factory setting
V1, V2	Curve of measured values after calibration

The change in the gradient is indicated in per cent. Factory setting = 100 %. After a change the calibration can be reset to factory setting (→ 9.6.7).

5 Installation

The rules and regulations for the installation and operation of compressed air equipment must be observed.

Installation in pipes:

► Insert the unit into a G1 process adapter and tighten the nut. Tightening torque max. 50 Nm. Ensure that the unit is correctly oriented.

5.1 Installation location

- Downstream of the cold dryer / near the load.
- If compressed air is fed into the main pipe through parallel pipes, the unit should be mounted in the main pipe.

- Installation downstream of the maintenance unit is also possible (if oil is used for the loads, the units must be mounted upstream of the oiler).

5.2 Installation conditions

Recommendation:

▶ Use a straight inlet pipe with a length of 20 x pipe diameter.

▶ In case of disturbances on the inlet side caused by elbows, valves, slides etc. use an inlet pipe with a length of 50 x pipe diameter.

▶ Use a straight outlet pipe with a length of 5 x pipe diameter.

5.3 Installation position

- Permitted installation positions: pipe length vertical, any position (fig. 1, 2); pipe length horizontal, unit vertical (fig. 3, 5); unit on side, pipe length left (fig. 4).
- Avoid the installation position in fig. 6 (unit on side, pipe length right). If the flow rate is low, the specified measurement accuracy cannot be adhered to.

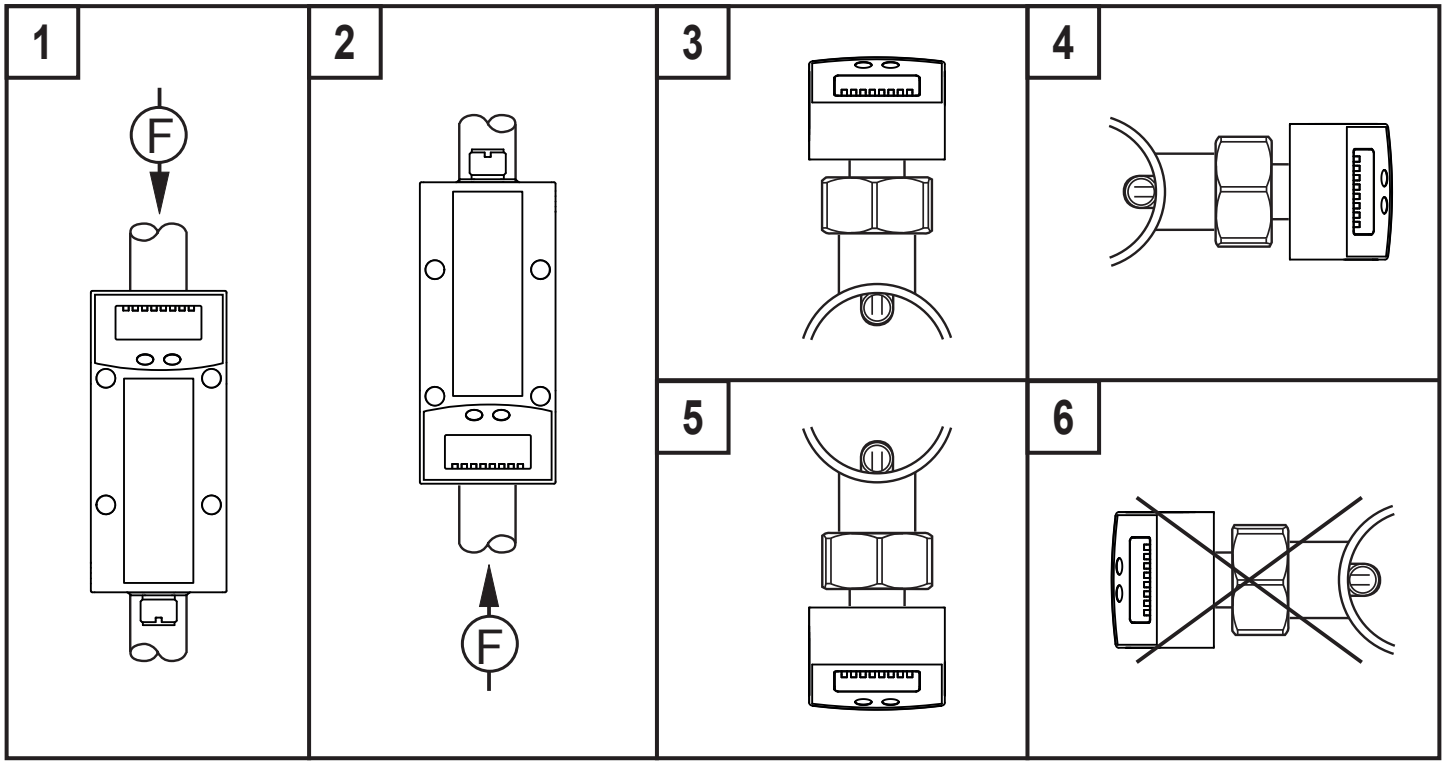

5.4 Installation example using the process adapter E40195

For an ideal alignment of the sensor's measuring probe to the direction of flow of the medium (fig. 4), observe the following notes on welding of the E40195 process adapter into the pipe:

- ▶ Drill a hole for the process adapter into the pipe and remove all burrs.
- ▶ Align the adapter with the alignment mark at a max. offset of ± 2° to the pipe axis (fig. 1 and 2).
- ▶ Ensure that the adapter does not extend into the pipe (fig. 2).
- ▶ Install the adapter precisely vertically in the pipe (fig. 3).

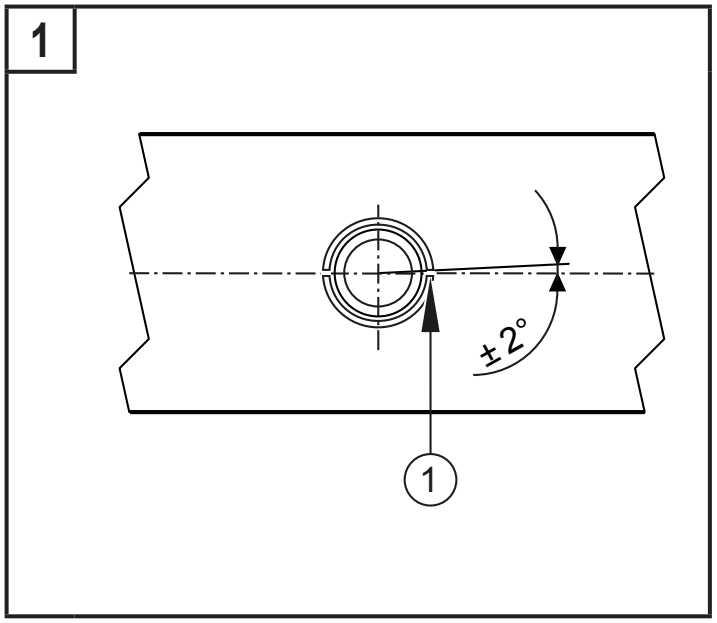

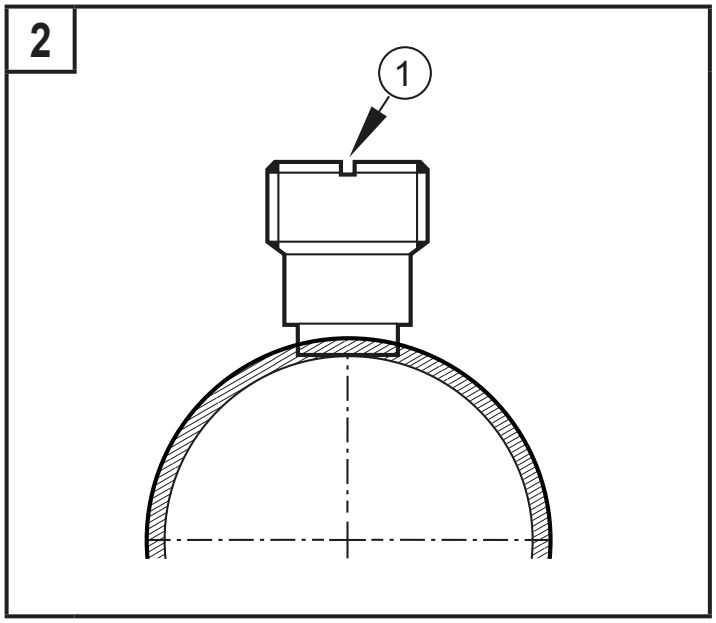

1: Alignment mark

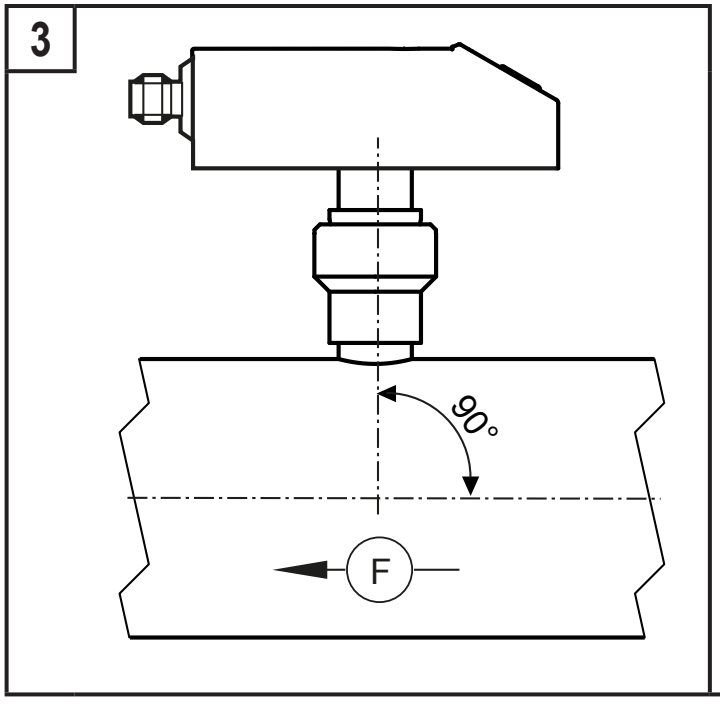

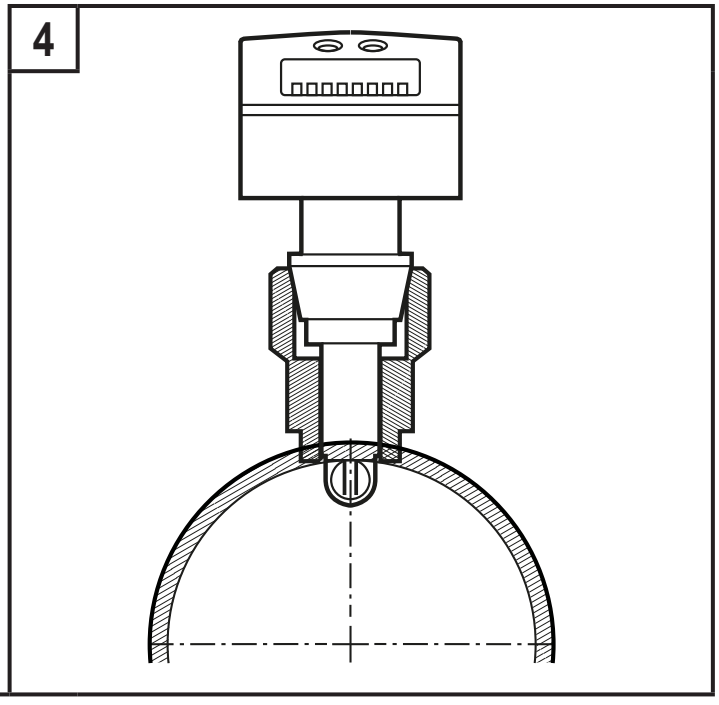

6 Electrical connection

The unit must be connected by a qualified electrician.

The national and international regulations for the installation of electrical equipment must be adhered to.

Voltage supply according to EN 50178, SELV, PELV.

▶ Disconnect power.

▶ Connect the unit as follows:

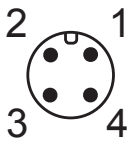

BK: black
BN: brown
BU: blue
WH: white

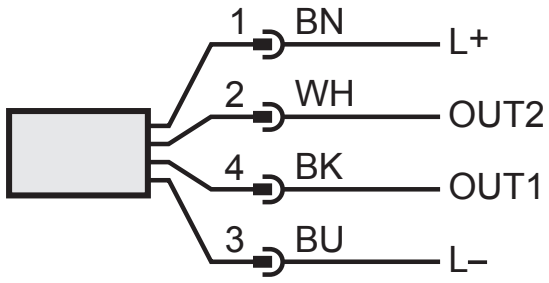

Colours to DIN EN 60947-5-2

Sample circuits:

2 x positive switching

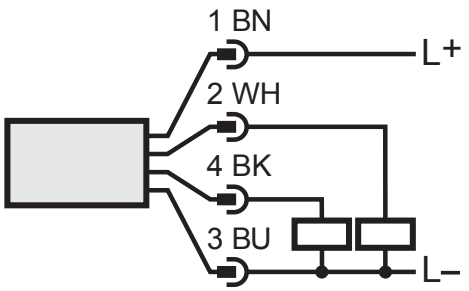

1 x positive switching / 1 x analogue

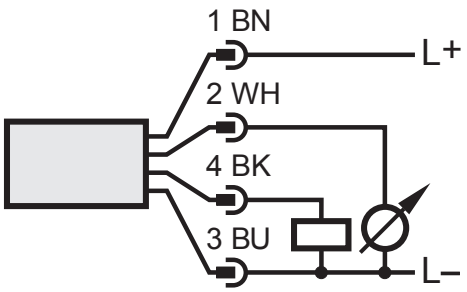

Pin 1	L+
Pin 3	L-
Pin 4 (OUT1)	• Switching signal: limit values for volumetric flow. • Switching signal: quantity meter reached preset value. • Pulses: 1 pulse every time the defined volumetric flow quantity is reached. • IO-Link
Pin 2 (OUT2/InD)	• Switching signal: limit values for volumetric flow. • Switching signal: limit values for temperature. • Analogue signal for volumetric flow. • Analogue signal for temperature. • Input for signal "meter reset".

7 Operating and display elements

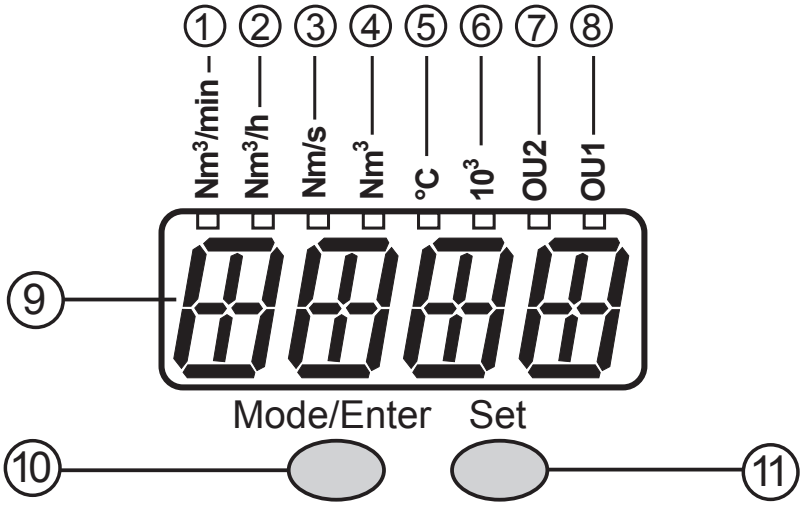

1 to 8: indicator LEDs
- LED 1 = current volumetric flow in standard cubic metres/minute(Nm^3/min). - LED 2 = current volumetric flow in standard cubic metres/hour (Nm^3/h). - LED 3 = current flow velocity in standard metres/second (Nm/s). - LED 4 = current consumed quantity since the last reset in standard cubic metres (Nm^3). - LED 4 flashing = consumed quantity before the last reset in standard cubic metres (Nm^3). - LED 4 and 6 = current consumed quantity since the last reset in 10^3 standard cubic metres. - LED 4 and 6 flashing = consumed quantity before the last reset in 10^3 cubic metres. - LED 5 = current medium temperature in °C. - LED 7, LED 8 = switching state of the corresponding output.
9: Alphanumeric display, 4 digits
- Indication of the current volumetric flow quantity (if [SELd] = [FLOW] is set). - Indication of the meter reading (if [SELd] = [TOTL] is set). - Indication of the current medium temperature (→ 10.2). - Indication of the parameters and parameter values.
10: Mode/Enter button
- Selection of the parameters and acknowledgement of the parameter values.
11: Set button
- Setting of the parameter values (scrolling by holding pressed; incrementally by pressing once). - Change of the display unit in the normal operating mode (Run mode).

8 Menu

8.1 Menu structure

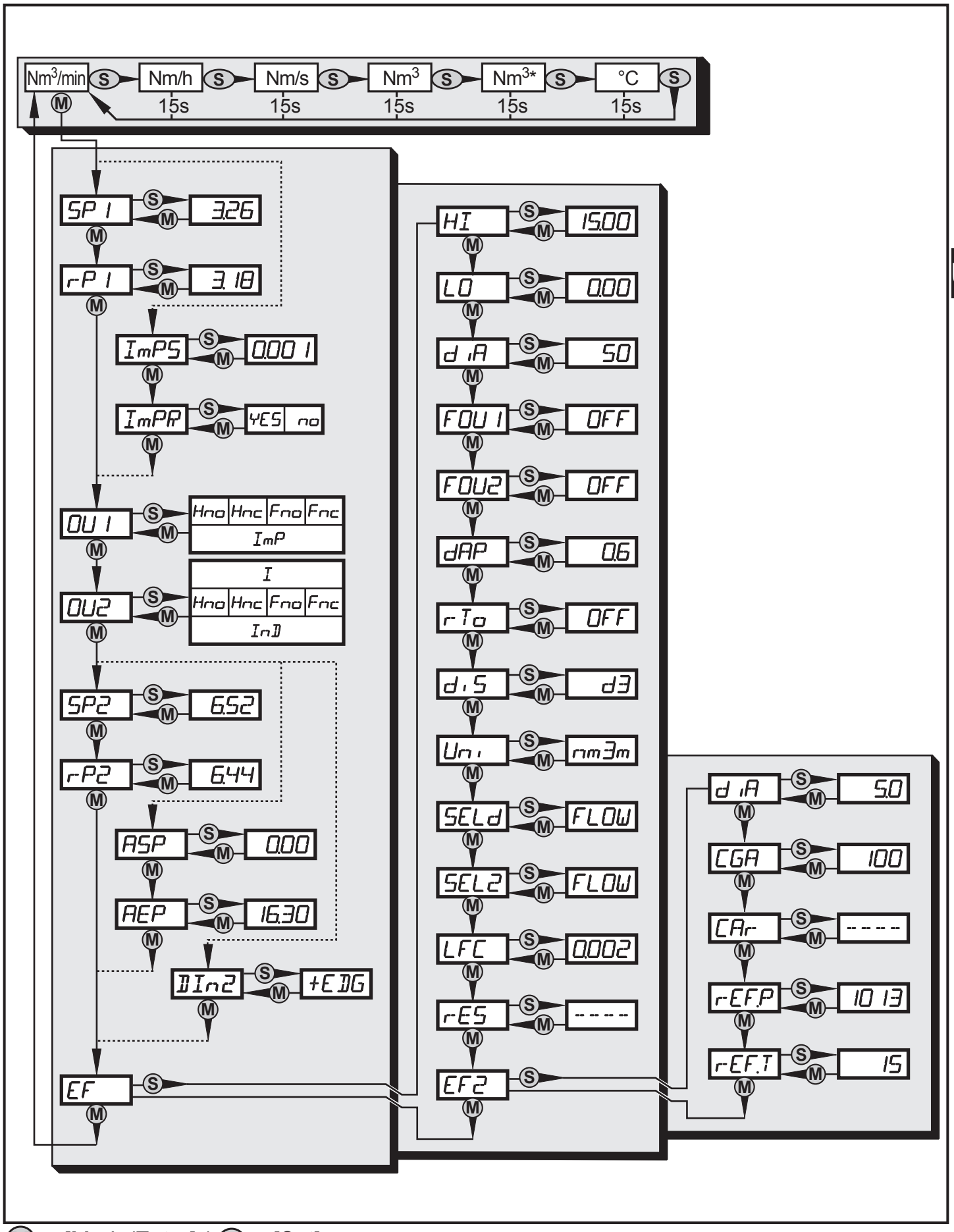

UK

Ⓜ = [Mode/Enter] / Ⓢ = [Set]

Nm^3 = current meter reading in Nm^3/ Nm^3* = saved meter reading in Nm^3

8.2 Explanation of the menu

SP1/rP1	Upper / lower limit value for volumetric flow.
ImPS	Pulse value.
ImPR	Pulse repetition active (= pulse output) or not active (= preset counter function).
OU1	Output function for OUT1 (volumetric flow or consumed quantity): - Switching signal for the limit values: hysteresis function or window function, either normally open or normally closed. - Pulse or switching signal for quantity meter.
OU2	Output function for OUT2 (volumetric flow or temperature): - Switching signal for the limit values: hysteresis function or window function, either normally open or normally closed. - Analogue signal: 4-20 mA [I].
	As an alternative: configure OUT2 (pin 2) as input for external reset signal: Setting: [OU2] = [InD].
SP2/rP2	Upper / lower limit value for volumetric flow or temperature.
ASP / AEP	Analogue start value / analogue end value for volumetric flow or temperature.
DIn2	Configure the input (pin 2) for meter reset.

8.2.1 Extended functions (1)

EF	Extended menu
HI / LO	Maximum / minimum value memory for volumetric flow.
diA	Indication of the internal pipe diameter in mm.
FOU1	Status of output 1 in case of an internal fault.
FOU2	Status of output 2 in case of an internal fault.
dAP	Measured value damping / damping constant in seconds.
rTo	Meter reset: manual reset / time-controlled reset.
diS	Update rate and orientation of the display.
Uni	Standard unit of measurement for volumetric flow: Nm^3/min or Nm/s.
SELd	Standard measured variable of the display: volumetric flow value, meter reading or medium temperature.
SEL2	Standard measured variable for evaluation by OUT2: - Limit value signal or analogue signal for volumetric flow. - Limit value signal or analogue signal for temperature.
LFC	Low flow cut-off.
rES	Restore factory setting.

8.2.2 Extended functions (2)

EF2	Extended menu 2.
diA	Setting of the inner pipe diameter in mm.
CGA	Calibration of the curve of measured values: define gradient.
CAR	Reset the calibration data.
rEF.P	Standard pressure which serves as a reference for measured and display values for volumetric flow.
rEF.T	Standard temperature which serves as a reference for measured and display values for volumetric flow.

9 Parameter setting

During parameter setting the unit remains in the operating mode. It continues to monitor with the existing parameters until the parameter setting has been completed.

9.1 IO-Link

9.1.1 General information

This unit has an IO-Link communication interface which requires an IO-Link-capable module (IO-Link master) for operation.

The IO-Link interface enables direct access to the process and diagnostic data and provides the possibility to set the parameters of the unit during operation.

In addition communication is possible via a point-to-point connection with a USB adapter cable.

You will find more detailed information about IO-Link at www.ifm.com/gb/io-link.

9.1.2 Device-specific information

You will find the IODDs necessary for the configuration of the IO-Link unit and detailed information about process data structure, diagnostic information and parameter addresses at www.ifm.com/gb/io-link.

9.1.3 Parameter setting tools

You will find all necessary information about the required IO-Link hardware and software at www.ifm.com/gb/io-link.

9.1.4 Adjustable parameters via IO-Link

- Inner pipe diameter [diA]
- Meter reset [rTo]

9.2 Parameter setting in general

3 steps must be taken for each parameter setting:

1	**Select the parameter** ▶ Press [Mode/Enter] until the requested parameter is displayed.	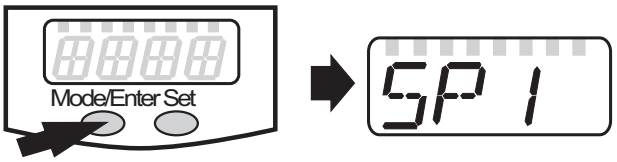
2	**Set the parameter value** ▶ Press and hold [Set]. > Current setting value of the parameter flashes for 5 s. > After 5 s: setting value is changed: incrementally by pressing once or scrolling by holding pressed.	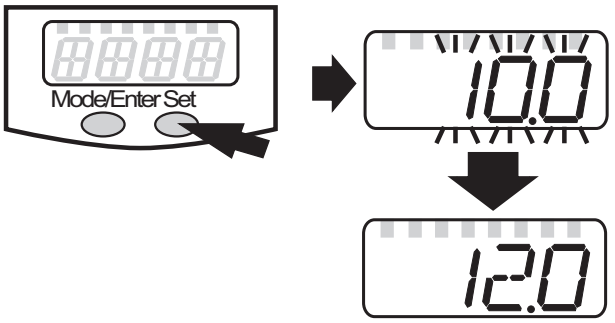
	Numerical values are incremented continuously. To reduce the value: let the display move to the maximum setting value. Then the cycle starts again at the minimum setting value.	
3	**Confirm the parameter value** ▶ Briefly press [Mode/Enter]. > The parameter is displayed again. The new setting value is saved.	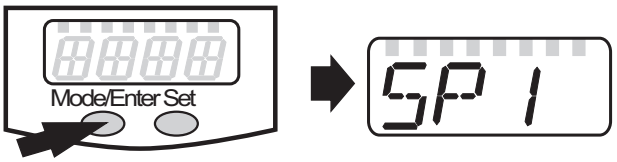
Set other parameters ▶ Start again with step 1.		
Finish parameter setting ▶ Press [Mode/Enter] several times until the current measured value is displayed or wait for 15 s. > The unit returns to the operating mode.		

If [S.Loc] is displayed when an attempt is made to modify a parameter value, either an IO-Link communication is active (temporary locking) or the sensor is permanently locked via software. This locking can only be removed with a parameter setting software.

9.2.1 Extended menu 1

▶ Press [Mode/Enter] until [EF] is displayed.	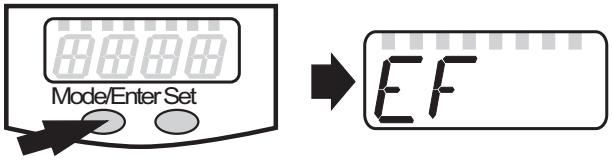

▶ Press [Set] briefly. > The first parameter of the submenu is displayed (here: [HI]).	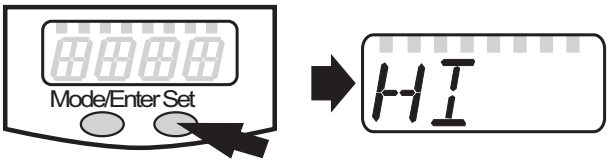

9.2.2 Extended menu 2

▶ Press [Mode/Enter] until [EF] is displayed.

▶ Press [Set] briefly.

> [EF2] is displayed.

▶ Press [Set] briefly.

> The first parameter of the extended menu [diA] is displayed.

If the extended menu is protected by an access code, [Cod] flashes in the display.

▶ Press and hold [Set] until the valid code no. is displayed.

▶ Briefly press [Mode/Enter].

9.2.3 Locking / unlocking

The unit can be locked electronically to prevent unintentional settings.

▶ Make sure that the unit is in the normal operating mode. ▶ Press [Mode/Enter] + [Set] for 10 s. > [Loc] is displayed.	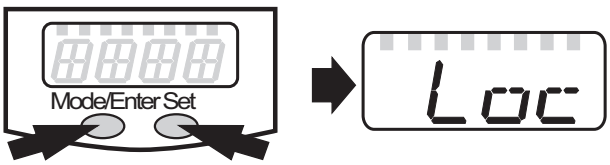
During operation: [LOC] is briefly displayed if you try to change parameter values.	
For unlocking: ▶ Press [Mode/Enter] + [Set] for 10 s. > [uLoc] is displayed.	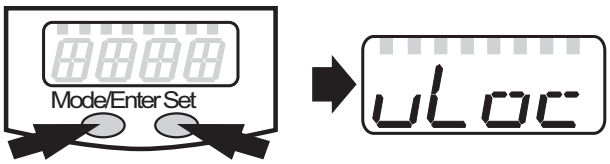

Factory setting: not locked.

9.2.4 Timeout

If no button is pressed for 15 s during parameter setting, the unit returns to the operating mode with unchanged values.

9.3 Settings for volumetric flow monitoring

9.3.1 Adjustment to the internal pipe width

▶ Select [diA] and set a numerical value in mm. Set the internal pipe widths before defining values for switching limits (SPx, rPx) and analogue limit values (ASP, AEP).	

9.3.2 Configure limit value monitoring with OUT1

▶ Select [Uni] and set the unit of measurement (→ 9.6.1). ▶ Select [OU1] and set the switching function. - [Hno] = hysteresis function/normally open. - [Hnc] = hysteresis function/normally closed. - [Fno] = window function/normally open. - [Fnc] = window function/normally closed. ▶ Select [SP1] and set the value at which the output switches. ▶ Select [rP1] and set the value at which the output resets.	

9.3.3 Configure limit value monitoring with OUT2

▶ Select [Uni] and set the unit of measurement (→ 9.6.1). ▶ Select [SEL2] and set [FLOW]. ▶ Select [OU2] and set the switching function. - [Hno] = hysteresis function/normally open. - [Hnc] = hysteresis function/normally closed. - [Fno] = window function/normally open. - [Fnc] = window function/normally closed. ▶ Select [SP2] and set the value at which the output switches. ▶ Select [rP2] and set the value at which the output resets.	

9.3.4 Configure analogue value for volumetric flow

▶ Select [Uni] and set the unit of measurement (→ 9.6.1). ▶ Select [SEL2] and set [FLOW]. ▶ Select [OU2] and set the function. - [I] = current signal proportional to volumetric flow (4…20 mA). ▶ Select [ASP] and set the value at which the minimum value is provided. ▶ Select [AEP] and set the value at which the maximum value is provided.	

9.4 Settings for consumed quantity monitoring

9.4.1 Configure quantity monitoring via pulse output

▶ Select [OU1] and set [ImP]. ▶ Select [ImPS] and set the volumetric flow quantity at which 1 pulse is provided (→ 9.4.3). ▶ Select [ImPR] and set [YES] > Pulse repetition is active. Output 1 provides a counting pulse each time the value set in [ImPS] is reached.	

9.4.2 Configure quantity monitoring via the preset counter

▶ Select [OU1] and set [ImP]. ▶ Select [ImPS] and set the volumetric flow quantity at which output 1 switches (→ 9.4.3). ▶ Select [ImPR] and set [no] > Pulse repetition is not active. The output switches ON if the value set in [ImPS] is reached. It remains switched until the counter is reset.	

9.4.3 Setting the pulse value

▶ Select [ImPS].
▶ Press and hold [Set].
> The current numerical value flashes for 5 s, then one of the 4 digits becomes active and can be changed as below:

1. Briefly press [Set]
   > Active figure is changed.
2. Keep [Set] pressed
   > The next figure on the left becomes active.

   - After the cycle of the figures on the left on the display the display changes to the next higher setting range (decimal point shifts or LED changes).
   - Change to the lower setting range: Keep [Set] pressed until the display moves through all ranges and jumps back to the start value.
3. Wait without pressing a button
   > The next figure on the right becomes active.

▶ Briefly press [Mode/Enter] when all 4 digits are set.

Setting ranges:

LED	Display	Value	Step increment
4	0 0 0 1 ... 9 9 9 9	1...9999 Nm³	1 Nm³
4 + 6	1 0 .0 0 ... 9 9 .9 9	10 000...99 990 Nm³	10 Nm³
4 + 6	1 0 0 .0 ... 9 9 9 .9	100 000...999 900 Nm³	100 Nm³
4 + 6	1 0 0 0 ... 1 0 0 0	1 000 000 Nm³	

9.4.4 Configure program-controlled meter reset

▶ Select [rTO] and continue with a) or b).
a) Reset the meter manually:
▶ Press [SET] until [rES.T] is displayed, then briefly press [Mode/Enter].
b) Enter the value for time-controlled reset
▶ Press [Set] until the requested value is displayed (intervals from 1 hour to 8 weeks), then briefly press [Mode/Enter].

9.4.5 Deactivate meter reset

▶ Select [rTo] and set [OFF] The meter is only reset after overflow (= factory setting). Overflow: After the maximum value (9 999 999 Nm³) the meter is reset to 0.	

9.4.6 Configure meter reset using an external signal

▶ Select [OU2] and set [InD] ▶ Select [Din2] and set the reset signal - [HIGH] = reset for high signal - [LOW] = reset for low signal - [+EDG] = reset for rising edge - [-EDG] = reset for falling edge	

UK

9.5 Settings for temperature monitoring

9.5.1 Configure limit value monitoring with OUT2

▶ Select [SEL2] and set [TEMP]. ▶ Select [OU2] and set the switching function. - [Hno] = hysteresis function/normally open. - [Hnc] = hysteresis function/normally closed. - [Fno] = window function/normally open. - [Fnc] = window function/normally closed. ▶ Select [SP2] and set the value at which the output switches. ▶ Select [rP2] and set the value at which the output resets.	

9.5.2 Configure analogue value for temperature

▶ Select [SEL2] and set [TEMP]. ▶ Select [OU2] and set the function. - [I] = temperature-proportional current signal (4…20 mA). ▶ Select [ASP] and set the value at which the minimum value is provided. ▶ Select [AEP] and set the value at which the maximum value is provided.	

9.6 User settings (optional)

9.6.1 Set standard unit of measurement for volumetric flow

▶ Select [Uni] and set the unit of measurement - [nm3m] = volumetric flow quantity in standard cubic metres/minute - [nm3h] = volumetric flow quantity in standard cubic metres/hour - [nmS] = flow velocity in standard metres / second The setting only has an effect on the volumetric flow value. The meter reading (consumed quantity) is automatically displayed in the unit of measurement providing the highest accuracy.	

9.6.2 Configure standard display

▶ Select [SELd] and set the standard unit of measurement: - [FLOW] = the current volumetric flow value in the standard unit of measurement is displayed. - [TOTL] = the current meter reading in Nm^3 or $Nm^3 \times 10^3$ is displayed. - [TEMP] = the current medium temperature in °C is displayed. ▶ Select [diS] and set the update rate and orientation of the display: - [d1] = update of the measured values every 50 ms. - [d2] = update of the measured values every 200 ms. - [d3] = update of the measured values every 600 ms. - [rd1], [rd2], [rd3] = display as for d1, d2, d3; rotated by 180°. - [OFF] = the display is switched off in the operating mode.	

9.6.3 Set output status in fault condition

▶ Select [FOU1] and set the value: - [On] = output 1 switches ON in case of a fault. - [OFF] = output 1 switches OFF in case of a fault. - [OU] = output 1 switches irrespective of the fault as defined with the parameters. ▶ Select [FOU2] and set the value: - [On] = output 2 switches ON in case of a fault, the analogue signal goes to the upper final value. - [OFF] = output 2 switches OFF in case of a fault, the analogue signal goes to the lower final value. - [OU] = output 2 switches irrespective of the fault as defined with the parameters. The analogue signal corresponds to the measured value.	

9.6.4 Set measured value damping

▶ Select [dAP] and set the damping constant in seconds (t value 63 %).	

9.6.5 Set low flow cut-off

▶ Select [LFC] and set the limit value Flows below the LFC value have no effect on the display and output signals.	

9.6.6 Calibrate curve of measured values

▶ Select [CGA] and set a percentage between 60 and 140 (100 = factory setting).	

9.6.7 Reset calibration data

▶ Select [CAr]. ▶ Press and hold [SET] until [----] is displayed. ▶ Briefly press [Mode/Enter]. > The values are reset to the factory setting (CGA = 100).	

9.6.8 Set standard pressure which serves as a reference for measured and display values for volumetric flow

▶ Select [rEF.P] and set the requested standard pressure Setting range: 950...1050 hPa in steps of 1 hPa	

9.6.9 Set standard temperature which serves as a reference for measured and display values for volumetric flow

▶ Select [rEF.T] and set the requested standard temperature Setting range: 0...25 °C in steps of 1 °C	

9.7 Service functions

9.7.1 Read min/max values for volumetric flow

▶ Select [HI] or [LO], briefly press [Set]. [HI] = maximum value, [LO] = minimum value. Delete memory: ▶ Select [HI] or [LO]. ▶ Press and hold [Set] until [----] is displayed. ▶ Briefly press [Mode/Enter]. It makes sense to delete the memories as soon as the unit operates under normal operating conditions for the first time.	

9.7.2 Reset all parameters to factory setting

▶ Select [rES]. ▶ Press and hold [Set] until [----] is displayed. ▶ Briefly press [Mode/Enter]. Recommendation: ▶ Before the reset note down your factory settings. → 12 Factory setting.	

10 Operation

Correct operation and compliance with the measurement accuracy can only be ensured if the environmental conditions specified in the technical data ((→ www.ifm.com → Data sheet search → Enter article number) are adhered to. Ensure that the maximum pressure range, measuring range and permitted ambient temperature are not exceeded.

After power-on and expiry of the power-on delay time (approx. 0.5 s) the unit is in the Run mode (= normal operating mode). It carries out its measurement and evaluation functions and generates output signals according to the set parameters.

- Operating indicators → 7 Operating and display elements.
- During the power-on delay time the outputs are switched as programmed: ON for normally open function (Hno, Fno), OFF for normally closed function (Hnc, Fnc).
- If output 2 is configured as analogue output, the output signal is at the final value of the measuring range during the power-on delay time.

10.1 Read set parameters

▶ Press [Mode/Enter] until the requested parameter is displayed.

▶ Press [Set] briefly.

> The unit displays the corresponding parameter value. After about 15 s it again displays the parameter, then it returns to the Run mode.

10.2 Change display unit in the Run mode

▶ Press [Set] briefly in the Run mode. Press the button to move to the next display unit.

> The unit displays the current measured value in the selected display unit for approx. 15 s, the corresponding LED is lit.

10.3 Fault indications

[SC1]	Short circuit in OUT1.*
[SC2]	Short circuit in OUT2.*
[SC]	Short circuit in both outputs.*
[OL]	Measured value > 120 % of the final value of the measuring range.
[UL]	Measured value < initial value of the measuring range.
[Err]	Flashing: fault in the measuring probe.

*The output concerned is switched off as long as the short circuit exists.
These messages are displayed even if the display is switched off.

10.4 General operating conditions

The unit is maintenance-free for media which do not stick to the measuring probes.

- From time to time check the measuring probes visually for build-up.
- If necessary, clean them at regular intervals. To do so, use a suitable cleaning liquid (e.g. alcoholic solution).
- Avoid mechanical damage to the measuring probes.

11 Technical data and scale drawing

Technical data and scale drawing at www.ifm.com.

12 Factory setting

	Factory setting	User setting
SP1	**422**	
rP1	**412**	
ImPS	**1**	
ImPR	**YES**	
OU1	**Hno**	
OU2	**I**	
SP2 (FLOW)	**844**	

rP2 (FLOW)	**834**	
SP2 (TEMP)	**24.0**	
rP2 (TEMP)	**23.8**	
ASP (FLOW)	**0.00**	
AEP (FLOW)	**2110**	
ASP (TEMP)	**0.0**	
AEP (TEMP)	**60.0**	
DIn2	**+EDG**	
FOU1	**OFF**	
FOU2	**OFF**	
dAP	**0.6**	
rTo	**OFF**	
diS	**d3**	
Uni	**nm3h**	
SELd	**FLOW**	
SEL2	**FLOW**	
LFC	**0.04**	
diA	**72**	
CGA	**100**	
rEF.P	**1013**	
rEF.T	**15**	

LVC – GATE VALVES

LINED VALVE COMPANY

FIGURE 93
INSTALLATION AND MAINTENANCE

DESCRIPTION

The LVC Fig 93 is a bonnetless knife gate valve. It has either a metal to metal or a metal to o-ring seat. In either case it is a unidirectional valve, meaning that there is a preferred seating direction. Four rows of packing are used to seal between the gate and the body. The pressure rating of the Fig 93 valve is 150 PSI CWP (Cold Working Pressure).

SHIPPING & STORAGE

For shipment the valve will be in the closed position. Small valves (3", 4", and 6") may be shipped in individual boxes. Larger valves and large quantities will be shipped on pallets, skids or in boxes, all of which will require a forklift for moving. Storage should be in a clean dry environment such as a warehouse.

INSTALLATION

Find the marking on the valve body near the top flange that says "**SEAT SIDE**". This is the down stream side of the valve. Be sure to install the valve so that pressure enters the upstream side of the valve and flows out of the downstream side of the valve. Failure to install the valve properly can result in damage to the valve gate.

Install the valve to the mating pipe flange using proper size bolts. See Chart 1 for bolt size. Bolt length is not included on Chart 1 since different flanges will require different length bolts. It is very important to choose the proper length of bolt for the bolt holes in the chest of the valve. These holes are bottom drilled and tapped holes and in some cases contain less than a bolt diameter of threads. Be careful not to bottom out bolts in the chest during installation. If necessary use washers to shorten the penetration of the bolt into the chest holes. Chart 2 gives recommended bolt torques to be used during installation, however, depending on the type of gaskets being used the required torques may be higher or lower. Use the cross torque pattern method for tightening the bolts. Mating flanges must be parallel and true with each other and the valve. Do not use the valve to pull together or force apart the two mating pipes.

After installation, open and close the valve once to assure smooth operation.

FIGURE 93 MAINTENANCE

The only items requiring maintenance on the Fig 93 knife gate valve are the packing and the lubrication of the stem. The packing gland may require adjustment after installation, especially if the valve has been in storage for a long time. All sizes of the Fig 93 valve have four or more packing gland bolts except for 3" and smaller valves. When adjusting packing on valves with four of more bolts, it is best to tighten the bolts on the side opposite the seat side first. Normally just a small amount of tightening per bolt is required. Do not tighten the bolts more than is necessary to stop the leaks. Adjust the packing gland down evenly to avoid the possibility of the gland rubbing on the gate as it moves. Generally, the more a valve is operated the more maintenance will be required to keep packing leaks under control.

Lubricate the stem nut and stem by using a grease gun on the grease fitting at the top of the yoke.

CHART 1

VALVE SIZE (IN)	BOLT SIZE (IN)	NUMBER FLANGE BOLTS
3”	5/8-11	4
4”	5/8-11	8
6”	3/4-10	8
8”	3/4-10	8
10”	7/8-9	12
12”	7/8-9	12
14”	1-8	12
16”	1-8	16
18”	1-1/8-7	16
20”	1-1/8-7	20
24”	1-1/4-7	20
30”	1-1/4-7	28
36”	1-1/2-6	32
42”	1-1/2-6	36
48”	1-1/2-6	44

CHART 2

VALVE SIZE (IN)	RECOMMENDED TIGHTENING TORQUE* (FT-LBS)
2”-3”	55 +/- 5
4”-8”	65 +/- 5
10”-12”	110 +/- 10
14”-16”	135 +/- 10
18”-24”	150 +/- 10
30”	200 +/- 10
36” - 48”	250 +/- 10

CONNECT WITH US

675 Mitchell Avenue
Woodland, WA 98674
E-mail: sales@linedvci.com

Tel: 360-225-1230
888-256-5779
Fax: 360-225-1235

NEOTECH ACQUA – UV TREATMENT SYSTEMS

NEOTECH™
AQUA SOLUTIONS
The World's Most Advanced UV Technology™

Installation, Operation, and Maintenance Manual

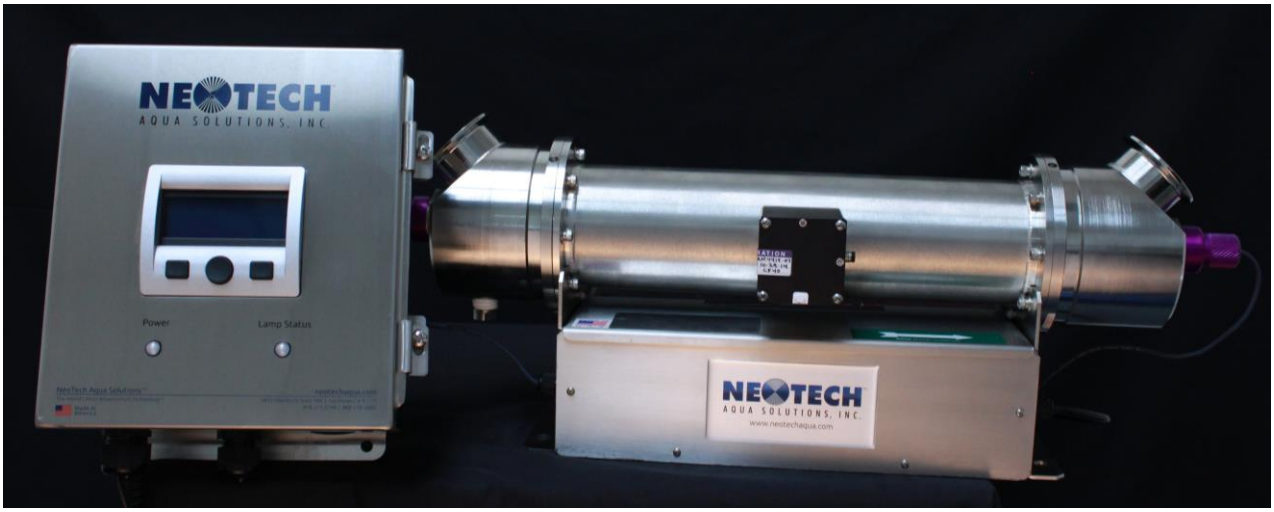

Series 3
Ultraviolet Water Purification Systems

Control Box Version 4
UV Monitor Type 3
Firmware 2031

Copyright by NeoTech Aqua Solutions, Inc. All rights reserved

Table of Contents:

INTRODUCTION 3
SYSTEM COMPONENTS 3
SAFETY PRECAUTIONS 4
WATER QUALITY 5
INSTALLATION 6
Unpacking 6
Unit Mounting 6
Water Connections 7
Electrical Connections 8
Ballast Cable Connections 9
External Interface Connections 10
Remote Run/Stop 11
Remote UV Intensity Monitor 12
Remote Fault Indicator 13
OPERATION 14
Setting System Parameters in the Control Box 15
Alarms 18
History 19
Setup Menu 21
Chamber Selection 21
Display Selection 22
Lamp Status Mode 23
Setting the Low UV Output Alarm Setpoint(s) - Background 24
UV Intensity Mode 26
Dosimetry Mode 28
Lamp Hour Reset 30
Support 32
About 33
Resetting the Control Box 34
MAINTENANCE 35
OPERATIONS AND MAINTENANCE LOG 36
TROUBLESHOOTING 37
SPARE PARTS 38
SPECIFICATIONS 39
LIMITED WARRANTY 43
Appendix A. Equipment Certificates 45
Appendix B. Mounting Diagrams 50

INTRODUCTION

Congratulations and welcome to the growing community of users that have discovered the benefits of the Series 3 UV water purification systems developed by NeoTech Aqua Solutions (NTAS).

The innovative design of the Series 3 ultraviolet reactors significantly increases the overall effectiveness of UV lamps for water purification. Because NTAS systems are more efficient, they require fewer lamps and less energy to achieve a given treatment level. As a result, NTAS systems have a smaller footprint and cost less to own and operate.

The NTAS Series 3 unit you have purchased is a high performance system which, with the proper lamp(s) can be used for microbial disinfection, ozone destruction, TOC reduction, or chlorine/chloramine reduction. The sanitary and durable construction of your NTAS system is suitable for even the most stringent applications, such as production of ultrapure water for semiconductor manufacturing or USP water-for-injection (WFI). If you have any questions about your specific application, please contact your distributor or NeoTech Aqua Solutions directly.

SYSTEM COMPONENTS

The NTAS Series 3 systems are comprised of one to four UV chambers, a control box, and the cables necessary to connect the chambers to the control box.

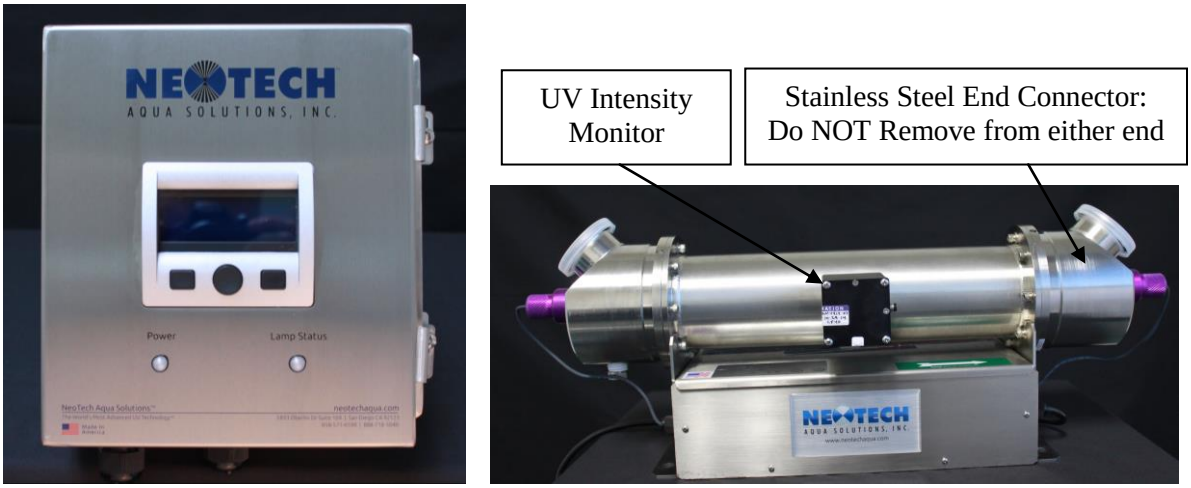

Fig. 1

Fig. 1: Multi-chamber UVS Control Unit (left) and UV Chamber (right) with UV Intensity Monitor (UVIM) installed. Ballast cables and UV Intensity Monitor cables not shown.

NOTICE: Removal of stainless steel End Connectors will void warranty.

SAFETY PRECAUTIONS

WARNING

This product contains a chemical known by the State of California to cause birth defects or other reproductive harm.

WARNING - to guard against injury, basic safety precautions should be observed, including the following:

READ AND FOLLOW ALL SAFETY INSTRUCTIONS.

1. **Do NOT loosen or remove bolts that connect End Connectors to chamber tube.** Doing so will void warranty. These bolts have a specific torque rating and there are no user serviceable components that require loosening or removal of End Connectors.
2. ***Caution!*** Disconnect power before servicing. If unit is hardwired, use appropriate lockout/tagout procedure to ensure power is removed from the unit before servicing.
3. ***DANGER!*** To avoid possible electric shock, special care should be taken since water is present near electrical equipment. Unless a situation is encountered that is explicitly addressed by the provided maintenance and troubleshooting sections, do not attempt repairs yourself; refer to an authorized service facility.
4. Carefully examine the unit after installation. Power should not be applied to the unit if there is water inside the control box or the ballast box (underneath the UV chamber)
5. Do not operate the unit if it has a damaged power cable or plug, if it is malfunctioning or if it has been dropped or damaged in any manner.
6. ONLY operate unit when chamber is completely filled with water.
7. Always disconnect water flow and remove power from the unit before performing any cleaning or maintenance activities. If the unit is hardwired, use appropriate lockout/tagout procedure to ensure power is removed from the unit before servicing. If the unit is powered from a wall plug, never yank the cord to remove from an outlet; grasp the wall plug and pull to disconnect.
8. Do not use this unit for any purpose other than the intended use. The use of attachments not recommended or sold by the manufacturer / distributor may cause an unsafe condition.
9. The treatment chamber has been designed to meet NEMA 12 or IP53 (protected from non-direct spray) environments, while the control box has a NEMA4X or IP67 rating. Do not install this unit where it will be exposed to the weather or to temperatures below freezing. Do not store this unit where it will be exposed to the weather. Do not store this unit where it will be exposed to temperatures below freezing unless all water has been drained from it and the water supply has been disconnected.
10. Read and observe important notices and warnings on all components of the unit.
11. If an extension cord is necessary, a cord with a proper rating should be used. A cord rated for less Amperes or Watts than the disinfection system rating may overheat. Care should be taken to arrange the cord so that it will not be tripped over or pulled.
12. **SAVE THESE INSTRUCTIONS.**

Warning: The UV light given off by this unit can cause serious burns to unprotected eyes and skin. Never look directly at an illuminated UV lamp. When performing any work on the UV disinfection system always unplug the unit first. Never operate the UV system while the UV lamp is outside of the UV chamber.

WATER QUALITY

The quality of the water entering any UV water purification system will significantly impact that system's effectiveness and operation. The following levels are recommended for your UV system:

UV Transmittance	**> 95% (call factory for recommendations on applications where UVT < 95%)**
Iron	**< 0.3 ppm (0.3 mg/L)**
Hardness*	**< 7 gpg (120 mg/L)**
Turbidity	**< 1 NTU**
Manganese	**< 0.05 ppm (0.05 mg/L)**
Tannins	**< 0.1 ppm (0.1 mg/L)**
pH	**6.5 – 9.5**
Suspended Solids	**< 10 ppm (10 mg/L)**
Water Temperature	**2 °C (35 °F) – 27°C (80 °F) operational, 2 °C (35 °F) – 40 °C (104 °F) maximum**

*Where total hardness is less than 7 gpg, the UV unit should operate efficiently provided the quartz sleeve is cleaned periodically. If total hardness exceeds 7 gpg, the water should be softened.

If your water contains levels in excess of those mentioned above, proper pre-treatment is recommended to correct these water problems prior to the installation of your UV treatment system. These water quality parameters can be tested by your local distributor, or they can recommend a private analytical laboratory. Your local distributor can also recommend the necessary pre-treatment equipment.

In some cases, de-rating may be able to compensate for non-ideal water conditions.

Water quality factors

For any UV purification system, the dose delivered to the water is defined by the following equation:

$$\text{Dose [mJ/cm}^2\text{ or microwatt-seconds/cm}^2\text{]} = \text{Intensity [mW/cm}^2\text{]} \times \text{Residence time [s]}$$

The residence time is determined by the flow rate and the flow dynamics in the UV chamber, and is a fixed value at a given flow rate.

The intensity is determined by a number of factors, including water based factors such as: suspended solids, level of dissolved organics, chlorine, other chemicals, and total hardness of the water. These can all be mitigated by treatment of the water upstream as required. Other factors affecting intensity include the cleanliness of the chamber and the aging of the lamp and sleeve within the chamber.

NSF CERTIFICATION

Series 3 Products have met the requirements of NSF 50, Annex H.1: Disinfection Efficacy for the ≥ 3 log reduction of Enterococcus faecium [ATCC #6569] and Pseudomonas aeruginosa [ATCC #27313]. The products are intended for supplemental disinfection and should be used with registered, or approved disinfection chemicals to impart residual concentrations in accordance with state and local regulations. Except for model D438, these products have not been evaluated to the Cryptosporidium inactivation requirements of NSF/ANSI 50.

The D438 has met the NSF/ANSI Standard 50 3-log (or better) Cryptosporidium inactivation requirements under the following conditions:

- Maximum flow rate of 150gpm at ≥ 91%-96% UVT, when the sensor reading is ≥ 7.6 mW/cm^2.
- Maximum flow rate of 251gpm at ≥ 95%-96% UVT, when the sensor reading is ≥ 10.0 mW/cm^2.
- Maximum flow rate of 470gpm at ≥ 96%-98% UVT, when the sensor reading is ≥ 12.5 mW/cm^2.
- Maximum flow rate of 500gpm at ≥ 90%-98% UVT, when the sensor reading is ≥ 12.4 mW/cm^2.

INSTALLATION

The system comes complete with all of the equipment required to begin treating your water. Installer is responsible for providing the necessary clamps, seals and fittings required to connect the UV chamber to the rest of the plumbing.

Unpacking

Tools required:

Box Knife

Inspect the packaging for damage before unpacking and note any issues on the shipper. Open the shipping container by cutting the tape with the box knife. Inspect the UV chamber and the control box for any damage incurred during shipping. Report any issues to your distributor, or NTAS. Remove the UV chamber and control box from the shipping container. A CD copy of the manual is included.

Unit Mounting

⚠ ***Caution!*** If the treatment chamber for the unit being installed has a mass greater than 55 lb (25 kg) (refer to the tables in Appendix A – Mounting Information), the treatment chamber should be lifted by two people or by using lifting equipment. If a lifting sling is used, the sling should be positioned under both end connectors to ensure that the load is balanced.

The unit is designed to be mounted in a horizontal position with the water ports pointing upward. If necessary, the unit can be mounted vertically if proper mounting procedures are followed. Specifically, the flow direction through a vertical chamber must be upward to prevent air bubbles and to ensure that the UV lamp is oriented properly. Place the units in their desired locations and check to make sure the power cable can reach an outlet and that the UV Intensity Monitor and ballast cables will reach from the control box to the UV chamber. If longer cables are required please contact your distributor, or NTAS.

IMPORTANT:
Allow clearance on at least one end of the UV unit to allow for lamp and lamp sleeve changes. Use the following table to determine the proper clearance for your particular unit:

Model	Clearance Required for Lamp Change
D222, T222, D322	22"
D228, T228, D328, D428	28"
D238, T238, D338, D438	38"

Limit the mechanical load on the water ports of the units to <25 lbs (11.3 kg). Locate the unit where it will not be exposed to excessive shock or vibration, or physical abuse. It is recommended to include valves on either end for ease of service, and a drain which is lower than the unit. If the unit is to be installed outdoors, it is preferable to locate it under a cover.

Mount the control box and the UV chamber(s) (see Appendix A for the mounting patterns). Note that there are portions of both the UV chamber and the control box which extend beyond the mounting patterns shown. If the unit is powered from a wall socket, the plug must be accessible so that power may be removed in an emergency. If the unit is hard wired to the power source, appropriate circuit breakers or disconnects must be included in the circuit.

If the UV system is to be mounted vertically, it is recommended to place the input at the bottom. This will reduce the potential for air bubbles and improve meter readings.

Water Connections

The system is designed to accept 1.5 in., 2 in., or 3 in. sanitary fittings depending on the model, unless one of the other, optional connection types was ordered. There is a specific inlet and outlet on the unit. Be sure to install with the arrows in the direction of flow to ensure proper performance of the system.

For installations with plastic plumbing (PVC, PVDF, PEX, etc.) adjacent to the UV unit it is important to install at least one (1) 90 degree metal elbow on each port between the UV unit and any plastic components. This is to create a “light-trap” and protect against damage due to residual UV light that will degrade plastic piping.

Be sure to install any required pretreatment equipment and to perform any adjustment or flushing of the system prior to installing your UV system.

Connect the inlet water and outlet water lines to the UV chambers. Fill the chamber with water. Circulate enough water through the system to remove any trapped air bubbles from the system prior to operating the unit.

Standard fittings to convert from sanitary to NPT or flange are available. Please consult the factory if assistance is needed.

IMPORTANT: Reactor chamber must be filled with water before plugging-in unit.

Electrical Connections

To finish the installation, complete the electrical connections. Electrical connections should be made only by an electrician or other personnel trained and competent in electrical installation.

Caution! Do not connect the input power (or plug unit in) until other connections are made.

Caution! Input power connection must be made in such a way that disconnection of power is easily recognized and accomplished.

Caution! Do not connect the input power (or plug unit in) until chamber is filled with water.

The cable(s) for the UV Intensity Monitor (UVIM) is/are attached to the Control Unit. Connect the loose end of each UVIM cable to the UV Intensity Monitor on each corresponding UV chamber, using the "plug-and-screw" circular connector. (see Fig. 2). Be sure to properly align the pins on the UVIM with the appropriate sockets in the UVIM Cable Connector. Push Connector over pins and screw outer collar to secure.

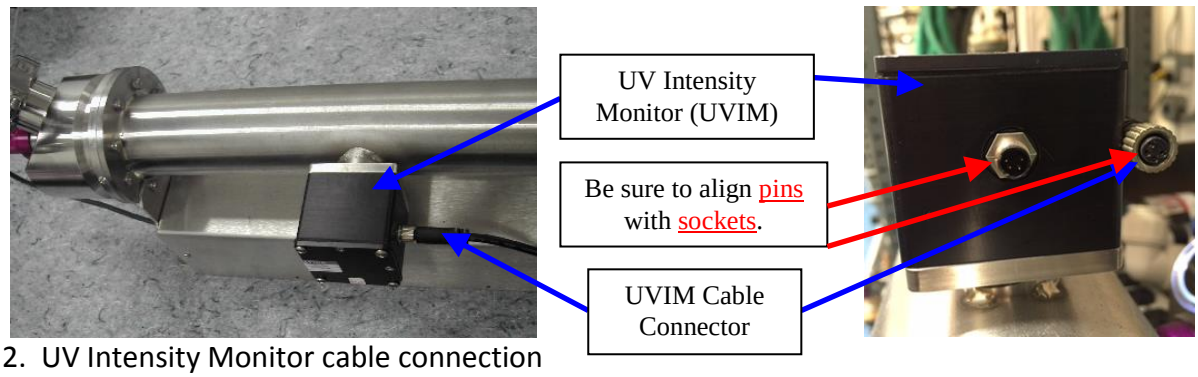

Figure 2. UV Intensity Monitor cable connection

NOTE: Before proceeding, please ensure that the Control Box is disconnected from the power source.

Next, connect the loose end of the Ballast Cables on the Treatment Chambers to the Control Unit. The end of the Ballast Cable that connects to the UV chamber has been installed at the factory. Pass the loose end(s) through the watertight feed-through receptacle(s) on the bottom of the Control Unit (see Fig. 3).

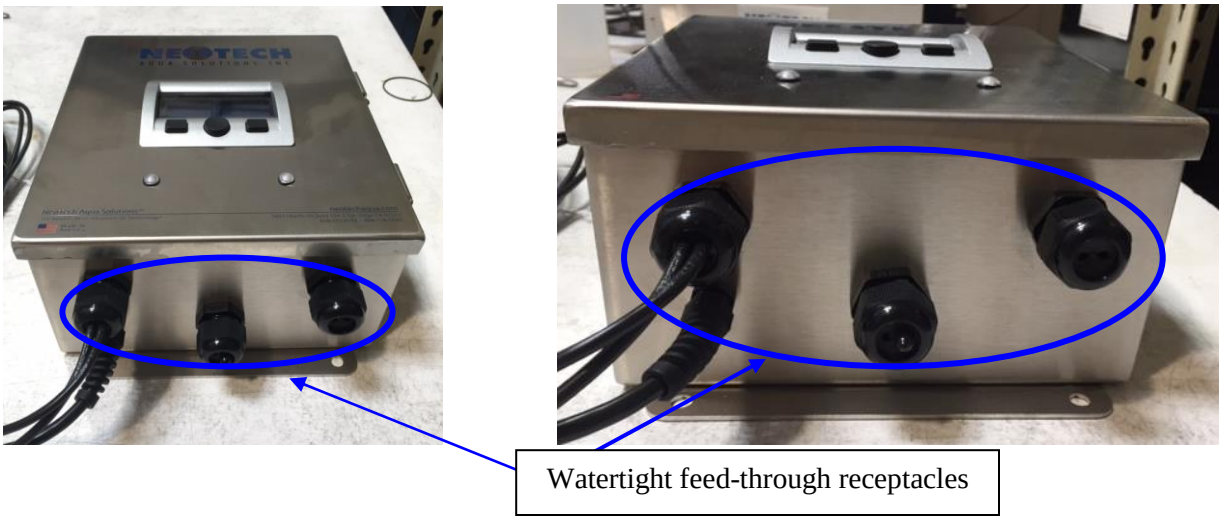

Figure 3. Location of Control Unit Feed-Through Receptacles

Ballast Cable Connection(s)

NOTE: Before proceeding, please ensure that the Control Box is disconnected from the power source.

Connect the wires from the Ballast Cable(s) to the Terminal Block J3 on the Control Unit Power Board. Terminal Block J3 shown in Fig. 4. There will be one Ballast Cable containing three (3) wires ({white, black, and green or green/yellow} or {blue, brown, green, yellow}) for each UV Chamber.

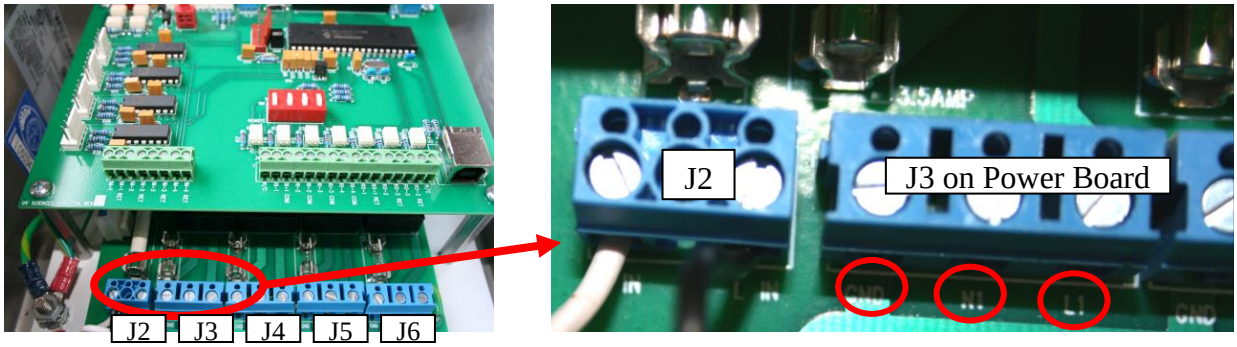

Figure 4. Location of input and ballast power cable connections inside control box.

The 120/230 VAC Hot (black or brown) wire of the Ballast Cable for UV chamber #1 should be connected to terminal J3-L1. The Neutral (white or blue) wire should be connected to terminal J3-N1, and the Ground (green or green/yellow) wire should be connected to J3-GND.

Tighten the feed-through nut on the bottom of the control box for this ballast power cable after the connections have been made. The Ballast Cables for UV Chambers #2, #3, and #4 are made in the same manner to terminal blocks J4, J5, and J6 respectively, which are lined up from left to right immediately next to J3 (refer to left picture in Fig. 4).

NOTE regarding Re-inserting Wires into Terminal Block Locations:

When re-inserting wires into a previously used terminal location it may be necessary to first push up the Locking Plate inside the terminal. The Locking Plate is a small plate that will compress the wire when the terminal screw is tightened. If a terminal screw is loosened and the wire is removed from a terminal location, the Locking Plate will typically stay in the "down" position. Therefore, when replacing a wire into a previously used terminal location, it may be necessary to first insert a small probe and "pop" the Locking Plate back to the "up" position (be sure to first loosen the terminal screw to the point that the head of the screw is flush with the top of the terminal block).

If the Locking Plate is in the "down" position it will be difficult to properly insert a wire under the Locking Plate. A wire can be properly secured ONLY if it is inserted through the hole and under the Locking Plate. Maximum torque on terminal block screws is 0.5 Nm (Newton meters) or 4.4 in. lbs.

External Interface Connections

NOTE: Before proceeding, please ensure that the Control Box is disconnected from the power source.

The following instructions are for connecting an External Controller or PLC to the remote monitoring and control interface of the UV system. The system can be operated entirely from the front panel of the Control Unit, the interface in this section allows the user to operate the system remotely. Connections should be made with multi-wire, twisted pair shielded cables. The number of pairs per cable and the number of cables will depend on the number of units being connected and the number of features that are required. For each UV chamber one (1) pair of wires will be required for the associated 4-20mA signal for each UV Intensity Monitor and one (1) pair is required for the Remote Start/Stop feature. Regardless of the number of chambers being operated, three (3) pairs of wires are required for the Alarm Signals. The maximum number of pairs that can be combined in a single cable will be dependent on the thickness of the cable. The maximum thickness of cable that will fit through the cable feed-throughs is 0.26" (6.5mm). The cable should have conductors in the range of 20 – 28 AWG. See Figure 5 for the location of the External Interface Terminal Blocks J17 and J3 on the Control Board. The cable feed-through(s) on the bottom of the Control Unit are shown in Fig. 3.

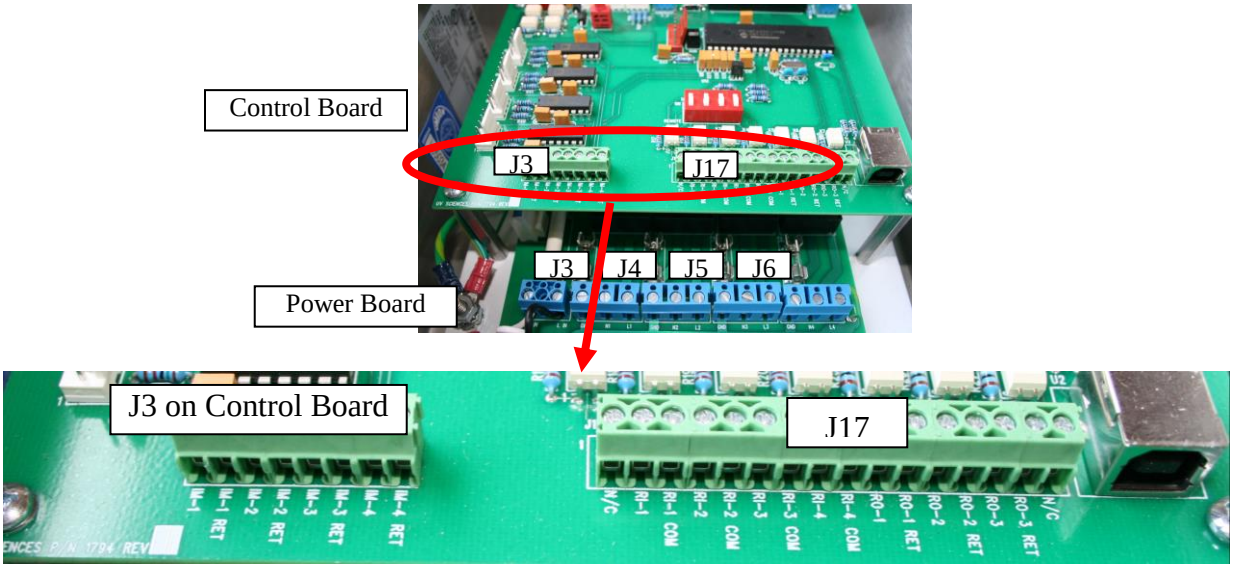

Figure 5. Location of External Interface Connections inside Control Unit.

NOTE regarding Re-inserting Wires into Terminal Block Locations:

When re-inserting wires into a previously used terminal location it may be necessary to first push up the Locking Plate inside the terminal. The Locking Plate is a small plate that will compress the wire when the terminal screw is tightened. If a terminal screw is loosened and the wire is removed from a terminal location, the Locking Plate will typically stay in the "down" position. Therefore, when replacing a wire into a previously used terminal location, it may be necessary to first insert a small probe and "pop" the Locking Plate back to the "up" position (be sure to first loosen the terminal screw to the point that the head of the screw is flush with the top of the terminal block).

If the Locking Plate is in the "down" position it will be difficult to properly insert a wire under the Locking Plate. A wire can be properly secured ONLY if it is inserted through the hole and under the Locking Plate. Maximum torque on terminal block screws is 0.5 Nm (Newton meters) or 4.4 in. lbs.

Remote Run/Stop

NOTE: Before proceeding, please ensure that the Control Box is disconnected from the power source.

The Control Unit has a feature which allows each UV chamber to be operated either remotely or locally, and independently from the other chambers. Any of the four units can be operated in either mode, regardless of the modes selected for the other chambers. In the local mode, the chambers turn on automatically when the unit is powered-up, subject to the initial power-up settings for the system. A chamber in Local Mode can be turned on or off only by using the Control Unit display screen and user interface Control Buttons (see the Operation section). A chamber in Remote Mode can be turned on and off by applying 24VDC across the appropriate terminals on J17, after the Control Unit has been set-up for remote control of this chamber.

Setting a chamber to the Remote Mode requires two operations. First, the appropriate DIP switch on S2 should be set to "REMOTE" as indicated by the silk screen on the circuit board. S2 is the red four position DIP switch near the center of the control board (See Fig. 6). Next, the chamber must be turned-on using the Control Unit interactive display menu (see the Setup Main Menu Item section in the Operation potion of this manual). The Remote Control Inputs for each of the four chambers (RI-1, RI-2, RI-3, and RI-4) and their common (return) connections are on the left side of J17, as shown in Fig. 6.

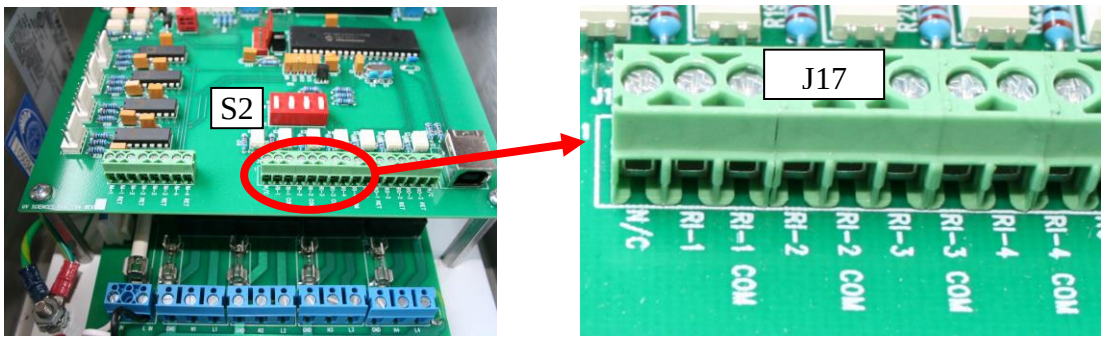

Figure 6. Close-up of Remote Run/Stop terminals.

NOTE: Once the control box is configured for a particular chamber to be operated remotely, the 24VDC signal **must** be applied across the appropriate RI terminal pair for that chamber to operate. If this signal is lost, even momentarily, the lamp will shut-down, and may need to be warmed-up again to achieve the full UV output. See the Operation section for details about lamp warm-up time. To return a chamber to local control, change the corresponding DIP switch on S2 from REMOTE to ON.

NOTE regarding Re-inserting Wires into Terminal Block Locations:

When re-inserting wires into a previously used terminal location it may be necessary to first push up the Locking Plate inside the terminal. The Locking Plate is a small plate that will compress the wire when the terminal screw is tightened. If a terminal screw is loosened, the Locking Plate will typically stay in the "down" position. Therefore, when replacing a wire into a previously used terminal location, it may be necessary to first insert a small probe and "pop" the Locking Plate back to the "up" position (be sure to first loosen the terminal screw to the point that the head of the screw is flush with the top of the terminal block). A wire can be properly secured ONLY if it is inserted through the hole and under the Locking Plate. Maximum torque on terminal block screws is 0.5 Nm (Newton meters) or 4.4 in. lbs.

Remote UV Intensity Monitor

NOTE: Before proceeding, please ensure that the Control Box is disconnected from the power source.

This is a user interface that provides a signal proportional to the UV Intensity output on the front panel of the Control Box. The signal can be used to remotely monitor the UV output of each individual chamber. The signal is an internally sourced 4-20 mA signal available from a terminal block inside the Control Unit. Each chamber has a separate signal. Note: Since this signal is internally sourced, the 4-20 mA receiver at any External Control should be isolated from local ground to prevent ground loops.

The remote signals for the UV Intensity Monitors are located on J3, which is the terminal block on the left in Fig. 7.

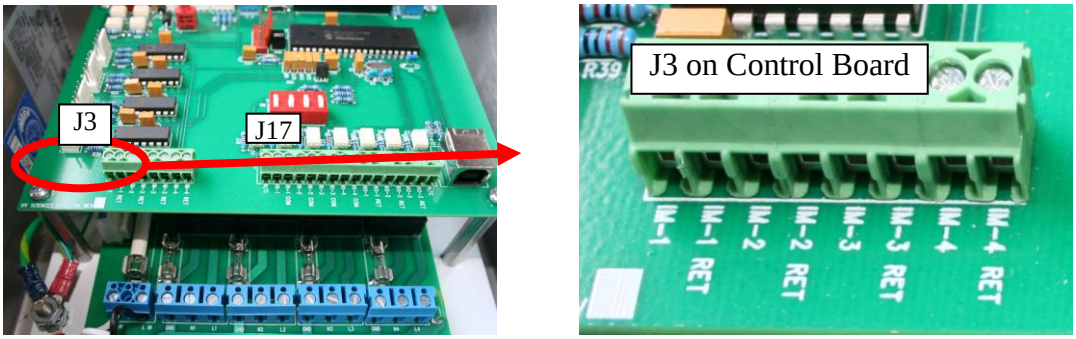

Figure 7. Close-up of UV Intensity Monitor remote output terminals.

To access the 4-20 mA signal corresponding to UV chamber #1, connect the signal wires to terminals J3-IM-1 and J3-IM-1 RET. Chambers #2, #3, and #4 are connected in a similar manner. The irradiance E (or dose rate) measured by the UV Intensity Monitor is calculated from the measured current signal using the following equation:

$$E\ [mW/cm2] = \mathbf{10} \times (I\ [mA] - 4\ mA)$$

NOTE regarding Re-inserting Wires into Terminal Block Locations:

When re-inserting wires into a previously used terminal location it may be necessary to first push up the Locking Plate inside the terminal. The Locking Plate is a small plate that will compress the wire when the terminal screw is tightened. If a terminal screw is loosened and the wire is removed from a terminal location, the Locking Plate will typically stay in the "down" position. Therefore, when replacing a wire into a previously used terminal location, it may be necessary to first insert a small probe and "pop" the Locking Plate back to the "up" position (be sure to first loosen the terminal screw to the point that the head of the screw is flush with the top of the terminal block).

If the Locking Plate is in the "down" position it will be difficult to properly insert a wire under the Locking Plate. A wire can be properly secured ONLY if it is inserted through the hole and under the Locking Plate.

Maximum torque on terminal block screws is 0.5 Nm (Newton meters) or 4.4 in. lbs.

Remote Fault Indicator

The Control Unit provides three dry contact closure lines which provide a binary fault code to indicate the presence of one or more fault conditions. Table 1. below summarizes the fault conditions this output will indicate.

Indication	Binary Value	RO1	RO2	RO3	Notes
General System Fault	0	0	0	0	Indicates power out, microprocessor failure, main fuse blown, or control box power supply failure
Lamp 1 Fault	1	0	0	1	Indicates Chamber 1 has a UVIM output lower than the alarm setpoint. This will be accompanied by a red "Lamp Status" light on the control box front panel. Normally this indicates a lamp failure or lamp which has reached end of life.
Lamp 2 Fault	2	0	1	0	Indicates Chamber 2 has a UVIM output lower than the alarm setpoint. This will be accompanied by a red "Lamp Status" light on the control box front panel. Normally this indicates a lamp failure or lamp which has reached end of life.
Lamp 3 Fault	3	0	1	1	Indicates Chamber 3 has a UVIM output lower than the alarm setpoint. This will be accompanied by a red "Lamp Status" light on the control box front panel. Normally this indicates a lamp failure or lamp which has reached end of life.
Lamp 4 Fault	4	1	0	0	Indicates Chamber 4 has a UVIM output lower than the alarm setpoint. This will be accompanied by a red "Lamp Status" light on the control box front panel. Normally this indicates a lamp failure or lamp which has reached end of life.
Spare	5	1	0	1	
Low Lamp Output Warning	6	1	1	0	Indicates that one or more chamber has a UVIM output within 2 mW/cm^2 of its alarm setpoint. This will be accompanied by a flashing green "Lamp Status" light on the control box front panel. Check the control box front panel to determine which lamp is low in a multiple chamber configuration.
No Faults/Warnings	7	1	1	1	

Table 1. Fault Codes (1 = closed contact, 0 = open contact)

The fault condition will appear if any one of the above faults occurs. The fault will not clear until all faults have cleared, unless otherwise indicated above. Only the first fault of multiple faults will be indicated. The fault indicator is only an indicator. Any action needed as a result of these faults must be taken by the operator or the External Control computer.

The Lamp X fault indicators are driven by the same signal as the lamp status indicators on the front panel display of the Control Unit. If one of these is the fault indicated, the operator will be able to make that determination by looking at the front panel display of the Control Unit.

The Remote Fault Code signals are located on the right side of J17, as shown in Fig. 8. To access the three contact closure binary signals, connect pairs of wires to each of the three pairs of terminals: J17-RO-1 and J17-RO-1 RET, J17-RO-2 and J17-RO-2 RET, and J17-RO-3 and J17-RO-3 RET. The fault signal code is located in Table 1. above.

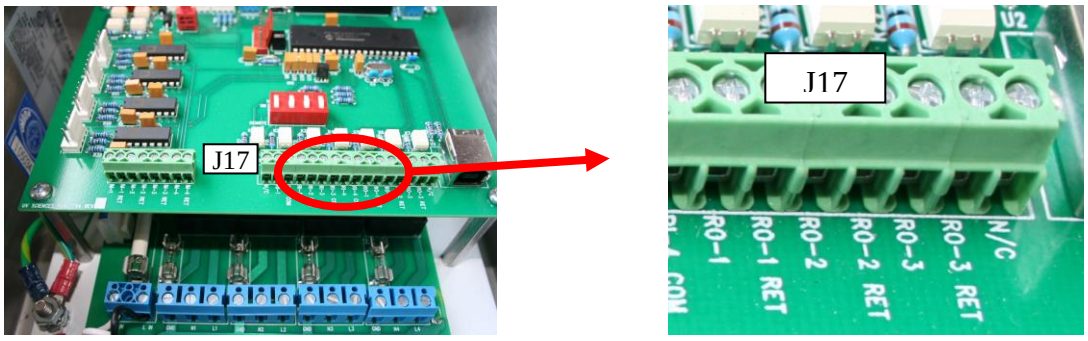

Figure 8. Close-up of Fault Output signal terminals.

OPERATION

Once installed and connected according to the instructions above, the unit is ready for operation.

NOTE: The lamp can take up to 15 minutes to warm up and achieve its full UV output. The chambers MUST be filled with water during the lamp warm-up process. It is not necessary to flow water through the unit while it is warming up, but the chambers must be filled with water.

NOTE: For a new unit, or after a period of more than a few days of storage or non-use, the UV Intensity Monitor may require up to 10 hours of continuous operation before its output stabilizes.

NOTE: Frequent power cycling (more than 1 times per day) can lead to premature lamp or ballast failure. Cycling the power more than 1X per day will void the lamp warranty.

1. Fill the chambers with water. Chambers MUST be filled with water before unit is plugged-in and/or turned on. Once the unit is warmed up, water should flow continuously to achieve optimum performance. The water temperature must not exceed 176° F (80° C) at any time, or damage to the UV lamp may result.

2. Maximum water pressure is 150 psi. This limit must not be exceeded, even for brief periods. Care must be taken to prevent "water hammer" and other pressure surges. After the chambers are filled with water, apply 120/230 VAC power to the control box. To do this, simply plug-in the Control Unit. When power is supplied to the control box, the front panel display will first display a welcome screen, followed by a status measurement for each of the chambers that have been turned on. The display panel has three buttons below the display. The functions for each of these buttons are defined in the display row above them. For example, in this screen, the middle button accesses the main control Menu. The left and right buttons are inactive in this screen, and therefore, do not have any action shown above them.

3. If the Remote Run/Stop option has not been selected for the unit, power will be sent to the chamber(s) immediately (assuming the chambers have been preset to be ON at the factory). If the Remote Run/Stop option has been selected for a chamber, the +24VDC signal must be applied to appropriate J17 terminals in the Control Unit to power-on a specific chamber.

4. Once power is applied and the appropriate Remote Run/Stop signals are present, the chamber is operational and no further action by the operator is required. However, there is a significant amount of operational and status information, as well as control functionality, available from the front display panel. These functions are detailed in the section below.

5. Keeping an Operation and Maintenance Log for the system is recommended, see page 35.

Setting System Parameters in the Control Box

The next step is to set up the unit via the front panel of the Control Box. Below is a diagram of the display screen structure.

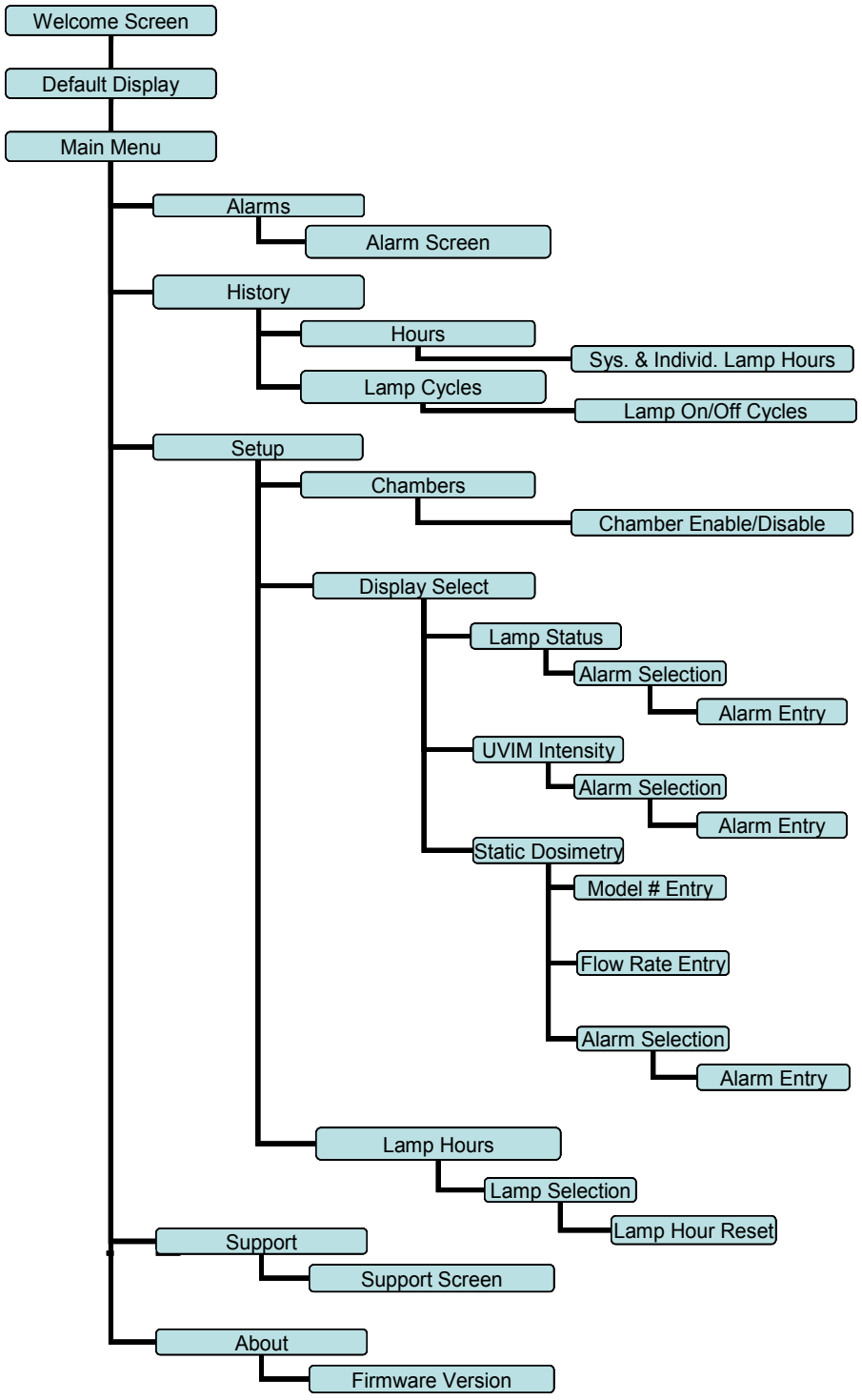

Figure 9. Flow chart for display menu.

This section provides examples of all the accessible display screens, and describes actions that can be taken and/or what information is available on each screen. When power is applied to the system, an initial welcome screen is displayed.

Note: Firmware refers to former company name.

After a few seconds, the display changes to the System Status Screen. The contents of this display are determined by the choice of monitoring mode. The three possible screens are shown below. The steps to set up the system are the same regardless of the initial monitoring mode.

Each display screen shows the readings of up to four treatment chambers in either the Lamp Status, the UV Intensity, or the Dosimetry mode. These modes provide the primary diagnostics for determining the status of the system.

To set up the system, begin by pressing the middle button below the screen (the button directly beneath MENU on the bottom of the display. This brings up the Main Menu screen shown below.

The Main Menu screen is the gateway to accessing all of the functions and information available from the Control Unit. Note the three buttons now each have a function listed above them (SCROLL, SELECT, EXIT). These three "soft keys" appear repeatedly when navigating through the controls. SCROLL moves the arrow pointer (currently pointing to Alarms) sequentially to each item in the current menu. SELECT "drills down" to the first sub-menu beneath the menu item indicated, and EXIT returns the display to the previous screen.

In this section, we will begin with the Main Menu and work through each sub-screen of a particular Main Menu item, and then move on to the next Main Menu item until all screens have been described.

“Alarms” Main Menu:

Selecting the Alarms menu brings up the following screen if no alarms are present:

If, for example, Lamp 1 and 2 are out of range, the alarm screen will look like this if the Display Screen is set to Lamp Status or UV Intensity mode:

If the Display Screen is set to Dosimetry mode and if Lamp 1 and 2 are out of range, the alarm screen will look like this:

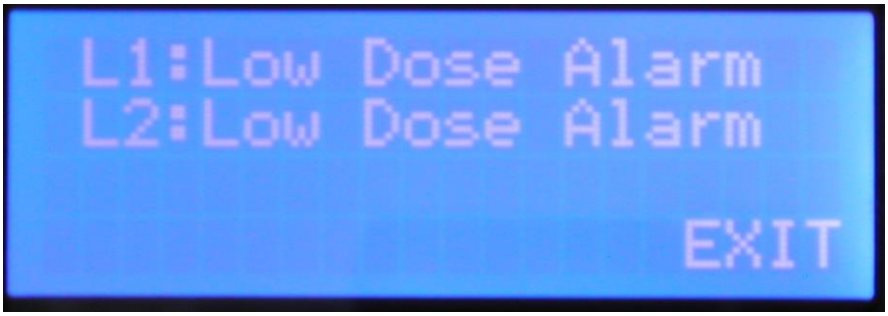

Note: The “Lamp” LED on the front of the control box will flash green if the UV Intensity is within 2 mW/cm^2 of the alarm setpoint in Lamp Status or UV Intensity mode or if the UV Dose is within 5% of the alarm set-point in Dosimetry Mode.

“History” Main Menu Item:

Selecting the History menu item brings up operational history of the system and the individual treatment chamber lamps.

Selecting the History Menu Item opens the following sub-menu:

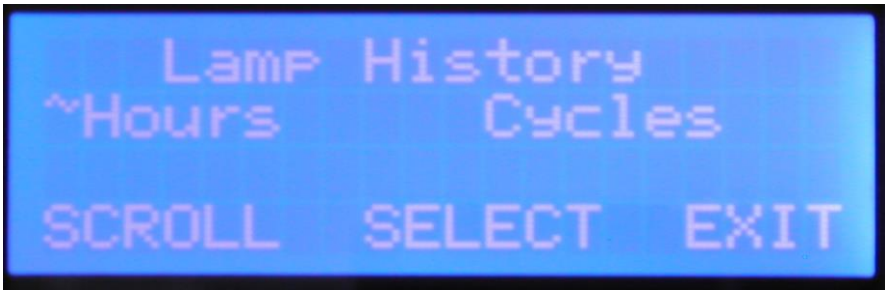

Selecting the Hours sub-menu brings up the following screen:

This screen shows the system total operational hours (total time the control box has received power), which is non-resettable. It also shows the lamp hours for up to four chambers. These timers are resettable, and should be reset whenever a lamp is changed. The process for doing this is described under the Setup Main Menu Item. Pressing the right button (under “EXIT”) returns the display to the Main Menu.

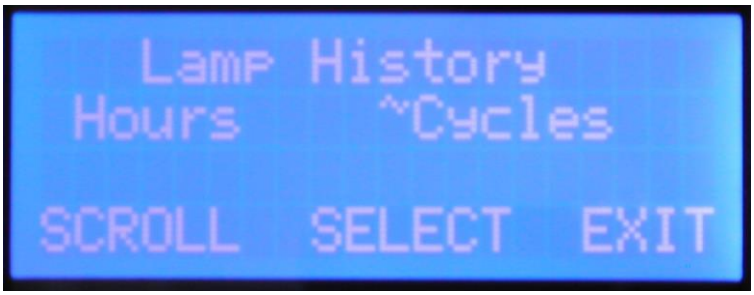

Selecting the Lamp Cycles sub-menu item displays the number of times each lamp has been powered up.

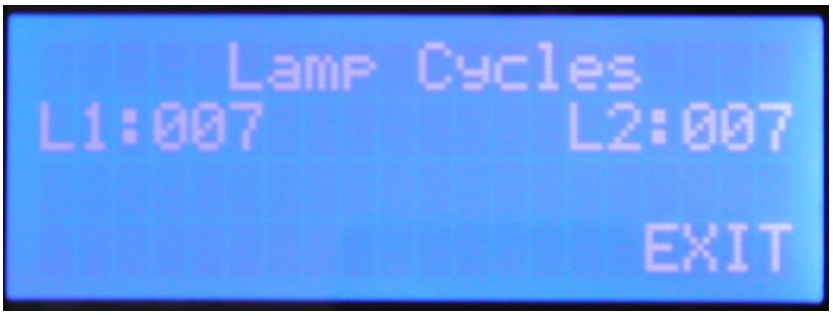

This number is reset when the Lamp Hours monitor is reset (see the Main Menu\Setup\Lamp Hours menu below).

“Setup” Main Menu Item:

The Setup Main Menu Item is used to make changes to the setup of the system (adding or disabling chambers, changing the display mode, etc.) and resetting diagnostics (lamp hours, alarms, etc.).

Main\Setup\Chambers

Selecting the Setup Main Menu Item will open the Setup Sub-Menu window below.

Selecting the **“Chambers”** sub-menu displays the following screen:

In this screen, a particular chamber can be turned on or off by pressing the middle button (“CHANGE”). Pressing the “CHANGE” button will toggle the chamber status of the chamber with the pointer. Note that the system will be preset at the factory with the number of chambers set to “ON” matching the number of chambers initially delivered with the control box.

NOTE: No changes will become active until the “OK” soft button is pressed. Pressing the “OK” button will also return the display to the Setup Sub-Menu window.

Main\Setup\Disp Sel

Selecting the **"Disp Sel"** (Display Select) sub-menu displays one of the following three screens.

NOTE: Selecting one of these screens disables any alarm limits or other parameters entered for any of the other screens. Only those parameters entered under the active screen will be used by the system.

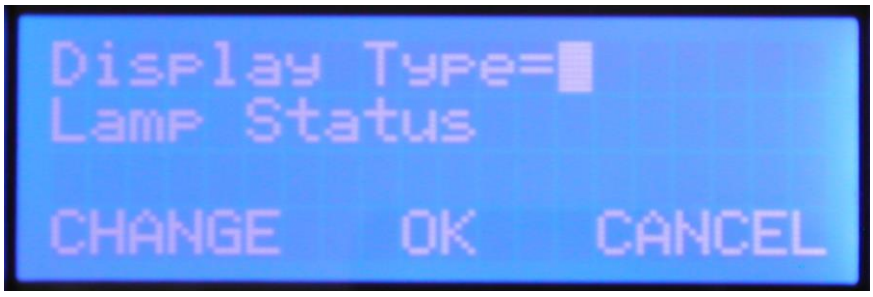

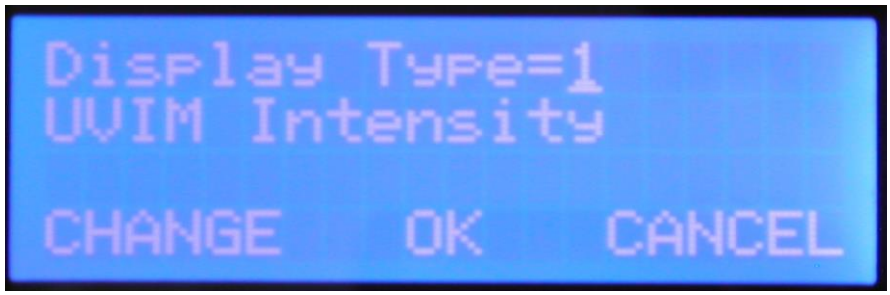

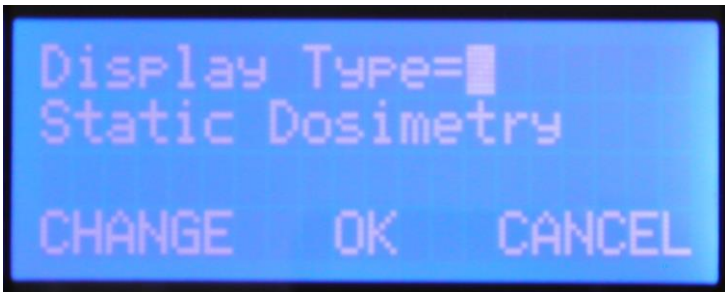

The screen which is currently selected is the one which comes up first. To change to one of the other screens, press the CHANGE button until the desired display appears, then press OK. Descriptions of the three screens are shown below.

Main\Setup\Disp Sel\Lamp Status

The “Lamp Status” screen is the simplest display, and is the default setting for the unit. It only indicates (based on the UV Intensity Alarm setting(s)) whether the individual chambers are operating above that alarm setpoint (left), or if the lamp should be replaced (right).

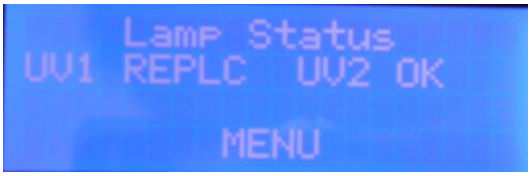

Any alarm in any mode is indicated by a red Lamp Status LED on the Control Box front panel. When a red LED appears, the specific chamber having an issue can be determined from the Alarms sub-menu item or via the remote output fault code.

When the “Lamp Status” display mode is selected by toggling the CHANGE button until that mode is displayed, then pressing OK as described above,

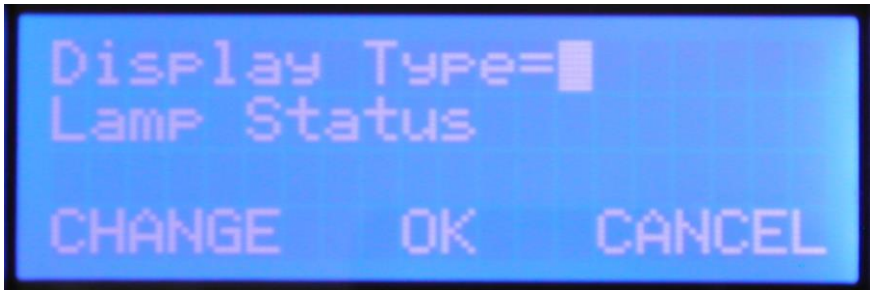

The next screen which appears is the Alarm Selection screen.

From the Alarms sub-menu screen, the threshold UV intensity reading for triggering an alarm can be set or adjusted. The monitor desired is selected by pressing the “SCROLL” button to move the pointer, then pressing the “SELECT” button to enter the window where the setting is changed. This window for “A1” above, is shown below.

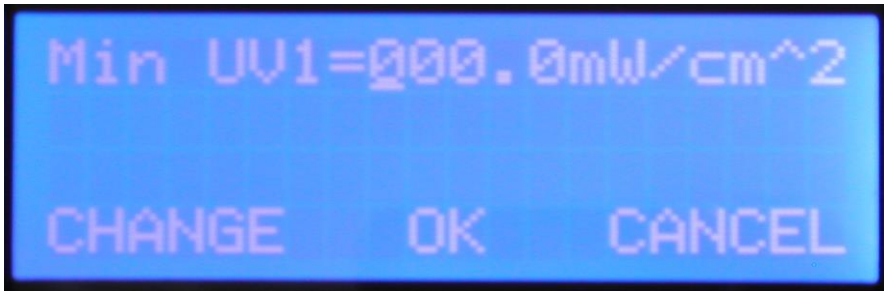

Pressing the "CHANGE" button repeatedly changes the highlighted number to the desired value. Pressing the "OK" button moves the cursor to the right one place, so that the next digit can be changed. When the cursor is on the rightmost digit, pressing "OK" completes the setting and returns the display to the Alarms sub-menu screen above. Pressing "CANCEL" at any time during this process aborts the change and returns the display to the Alarms sub-menu screen above.

Setting the Low UV Output Alarm Setpoint(s) - Background:

The minimum UVIM output required to achieve the design treatment level of 30 mJ/cm^2 at rated flow, is tabulated below.

Unit Name	Minimum UVIM reading [mW/cm^2]	Rated Flow @ 95% UVT [GPM]
D222	22.3	35
D228	13.8	50
D238	11.2	65
D322	8.8	100
D328	9.6	150
D338	10.0	225
D428	7.7	300
D438	9.0	500

The dosimetry formulas below are used to relate the flow rate (GPM), the dosage (mJ/cm^2) and the Ultra Violet Intensity Monitor reading (mW/cm^2) for each treatment chamber size at 95% UVT. The minimum U. V. Intensity Meter reading required to achieve a chosen dose and flow rate is determined by inserting the appropriate "K" Value below into the last Dosimetry Formula.

Formulas:

Flow Rate (GPM) = K * UVIM Reading (mW/cm^2) / Dose (mJ/cm^2)

Dose (mJ/cm^2) = K * UVIM Reading (mW/cm^2) / Flow Rate (GPM)

UVIM Reading (mW/cm^2) = Flow Rate (GPM) * Dose (mJ/cm^2) / K

"K" Values for all Treatment Chamber Models:

D222: K = 47
D228: K = 108
D238: K = 174
D322: K = 342
D328: K = 466
D338: K = 673
D428: K = 1,170
D438: K = 1,666

If the system is set for UVIM Intensity readout (mW/cm^2), it is recommended that the alarms for each chamber be set at the minimum UV reading listed above as a default. This ensures that an adequate dose will be delivered up to the highest allowable flow rate for the particular water condition at that

instant. The UVIM reports the true intensity in the chamber rather than just having an output proportional to the lamp output regardless of the water or chamber conditions. As long as the UVIM reading is above the minimum and the flow rate is at or below the design value, the dose is at or above the desired level, regardless of lamp age or water quality. This is a feature found only in NTAS UV treatment chambers.

NOTE: The same functionality can be obtained by using the Static Dosimetry display mode described below. This feature takes the UVIM Intensity and the estimated flow rate entered by the user to calculate the dose applied to the product. This eliminates the need for using the table above.

NOTE: This unit should be used with in conjunction with a flow meter and associated controls to ensure the maximum rated flow is not exceeded.

Selecting “EXIT” on the Alarms sub-menu screen returns the display to the Setup Sub-Menu screen.

Main\Setup\Disp Sel\Intensity

The Intensity display shows the measured intensity of the UV Intensity Monitor (UVIM) for each chamber independently. The display screen looks like this:

To set the unit to display this screen, press the MENU key, then select the Setup menu. The Setup menu screen will be displayed.

Select the **"Disp Sel"** sub-menu, then press CHANGE repeatedly until the unit has the following display:

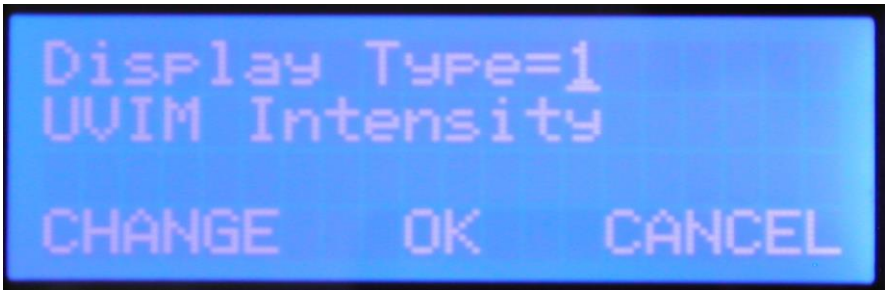

Selecting OK will set the Control Box display mode to display the UVIM Intensity screen, and will bring up the Alarm Entry Screen (this is the same screen as that for the Lamp Status mode):

From the Alarms sub-menu screen, the threshold UV intensity reading for triggering an alarm can be set or adjusted. These values should be set using the same table as in the Lamp Status section above. The default settings are 0.0 for all the UV Intensity alarms.

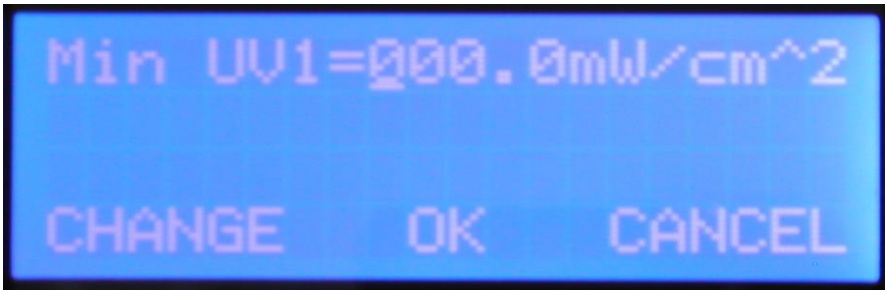

Pressing the "CHANGE" button repeatedly changes the highlighted number to the desired value. Pressing the "OK" button moves the cursor to the right one place, so that the next digit can be changed. When the cursor is on the rightmost digit, pressing "OK" completes the setting and returns the display to the Alarms sub-menu screen above. Pressing "CANCEL" at any time during this process aborts the change and returns the display to the Alarms sub-menu screen above. Press EXIT repeatedly until the UV Intensity screen is shown.

NOTE: The UVIM Intensity readout is limited to about 15% above the alarm setpoint entered. Beyond this, the display will show ">###.#" as shown below, indicating that the dose is well above the alarm point.

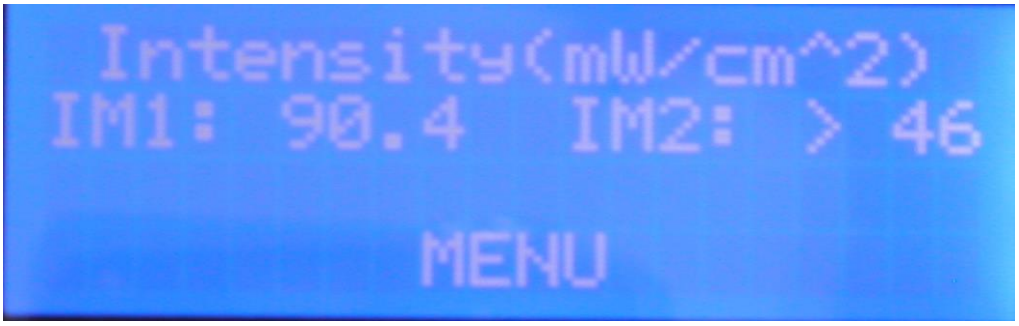

Main\Setup\Disp Sel\Dosimetry

The third option for the Display Screen is the Static Dosimetry screen. Static Dosimetry allows the user to input the flow rate of the system, which is then used to calculate the UV disinfection dose delivered to the water. As noted above for the UVIM Intensity readout, the Dosimetry readout is limited to about 15% above the alarm setpoint entered. Beyond this, the display will show ">###.#" as shown below, indicating that the dose is well above the alarm point.

To set the unit to display this screen, press the MENU key, then select the Setup menu. The Setup menu screen will be displayed.

Select the **"Disp Sel"** sub-menu, then press CHANGE repeatedly until the unit has the following display:

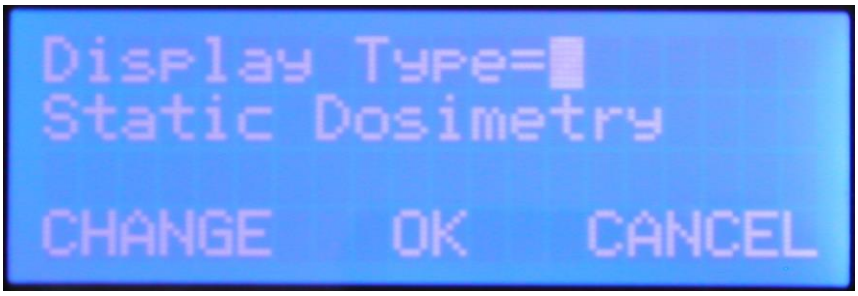

Selecting OK will set the Control Box display mode to display the Dosimetry screen, and will bring up the Static Dosimetry Setup screen.

Main\Setup\Disp Sel\Dosimetry\Model

The Control Box must know which chamber is being driven to provide the proper dose reading. When "**Model**" is selected, the following screen is displayed:

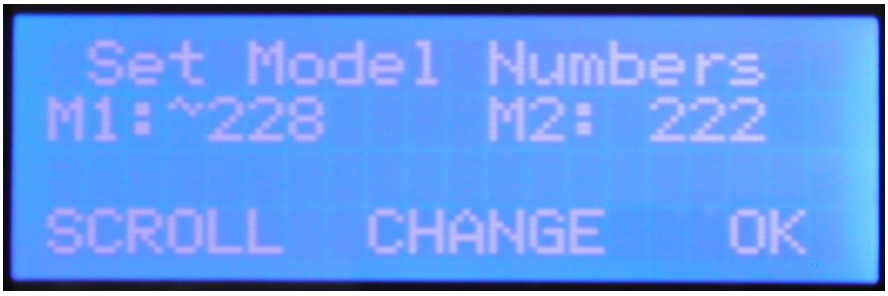

Use the SCROLL and CHANGE keys to select the UV Treatment Chamber model number for each chamber being used, and then press OK. This number is available from the nameplate for the treatment chamber. It is the 3 digit number forming part of the model number – "###". The display will return to the Static Dosimetry setup screen.

Main\Setup\Disp Sel\Dosimetry\Flow Rate

The Control Box must know the flow rate through each chamber to provide the proper dose reading. When "**Flow Rate**" is selected, the following screen is displayed:

Use the CHANGE key to change the highlighted digit, and the OK key to move to the next digit. Set each value to the expected maximum flow rate for each chamber being used, then press OK. The display will return to the Static Dosimetry setup screen.

Main\Setup\Disp Sel\Dosimetry\Alarms

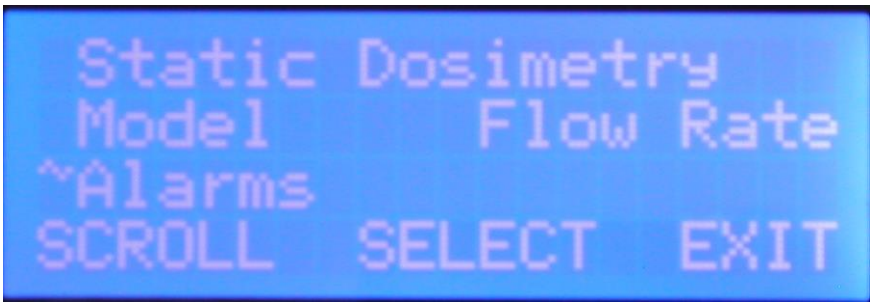

To set the dose alarm(s), use the SCROLL key to Move the indicator to "**Alarms**", then press SELECT. When "**Alarms**" is selected, the following screen is displayed:

Note that this is a different Alarm Entry screen from that used by the other two display options. Select one of the Alarms using the SCROLL key, then press the SELECT key to access the Alarm Entry screen. The default setting is 30.0 mJ/cm^2.

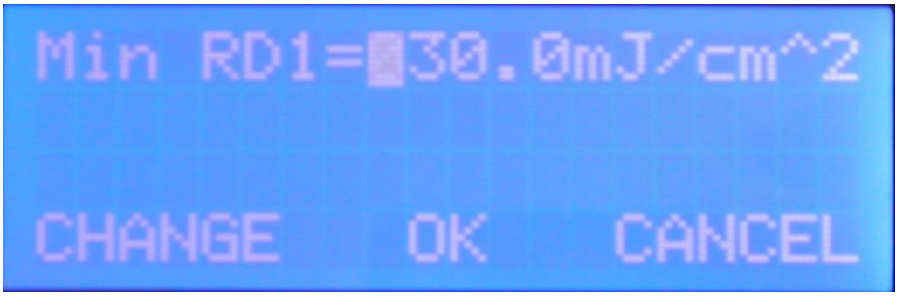

Use the CHANGE key to change the highlighted digit, and the OK key to move to the next digit. Set each value to the desired minimum dose for each chamber being used, then press OK. The display will return to the Static Dosimetry setup screen. Press EXIT repeatedly or wait for the timeout to return to the Main screen.

Main\Setup\Lamp Hrs

Press MENU on the main screen, then select Setup to enter the Setup Menu screen. Select "Lamp Hrs" as shown below to reset the lamp hours when a new lamp is installed.

Selecting “Lamp Hrs” brings up the Lamp Selection screen:

Select one of the Lamps using the SCROLL key, then press the SELECT key to access the Lamp Hour Reset screen.

From this screen, the lamp hours can be reset to zero or the process can be aborted by pressing “CANCEL”. Selecting either button returns the display to the Lamp Hours sub-menu. Pressing “EXIT” in the Lamp Hours returns the display to the Lamp Hours screen.

“Support” Main Menu Item:

Selecting the Support Main Menu Item displays the contact information to obtain support for the system.

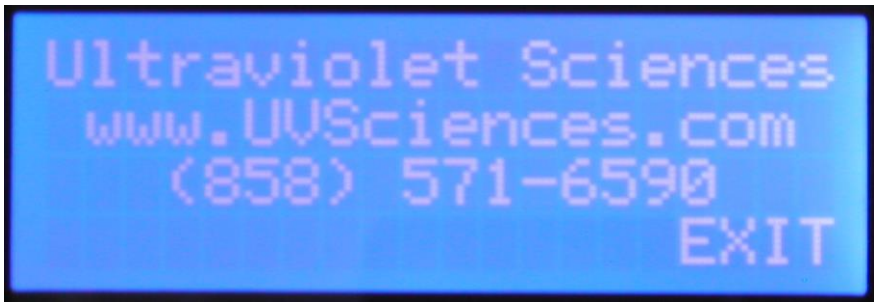

Note: Firmware refers to former company name.

“About” Main Menu Item:

The final Main Menu item is the About screen

Selecting the About Sub-Menu displays the firmware part number and version.

Note: Firmware refers to former company name.

This information may be needed to determine if any system upgrades or updates are required.

Resetting the Control Box

If the unit is not functioning properly and/or if the display is registering unusual information, it may be necessary to reset the Control Unit by pushing the Reset Switch inside the Control Box. Refer to the Troubleshooting Guide for a description of circumstances, for which resetting the unit is recommended.

One option to reset the system is to simply remove power from the Control Box. If that is not possible, the unit can be reset using the internal reset switch. To access this switch, loosen the latches on the Control Box and open the Control Box door. The Reset Switch S1 is located on the right hand side of the main control board, as shown in Figure 10 below. Press and release the Reset Switch S1 to reset the system. **NOTE:** Pressing the Reset Switch S1 will cause the lamps to turn off momentarily. Close and re-latch the lid when done.

Pressing the reset switch will not change any of the chamber, readout, or alarm settings entered into the system prior to the reset.

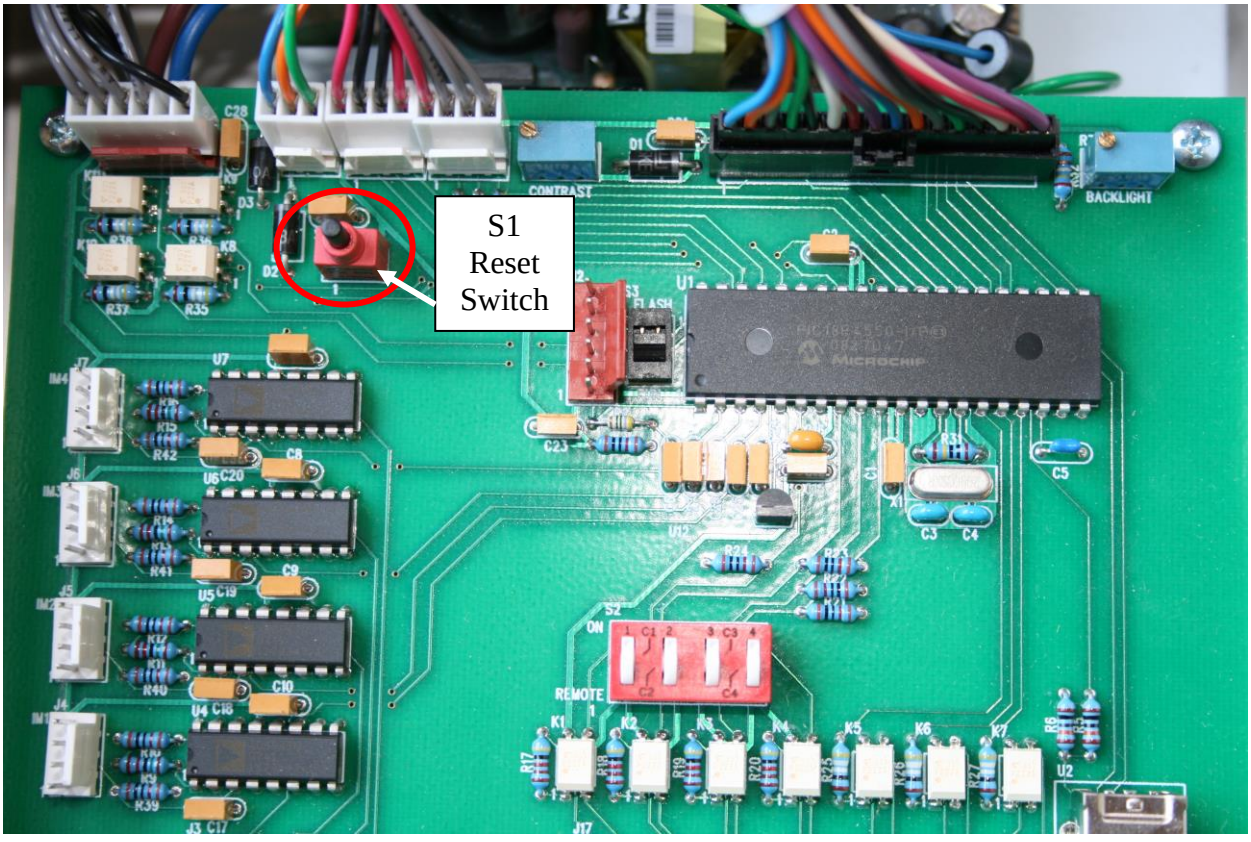

Figure 10. Reset switch location.

MAINTENANCE

Several maintenance and repair options for the UV Treatment System can be performed in the field. A complete set of the available procedures is listed below. All other repairs require the system to be returned to the authorized distributor, or the factory for repair.

Under normal conditions with good water quality, very little maintenance will be required. When a lamp does need replacing (approx.. 9,000 Hrs.), or a UV Monitor need re-calibration (annually), the replacement process is very simple and can be accomplished with ease using common hand tools.

It is highly recommended that an Operation and Maintenance Log be kept for the UV System. A record of the UV Treatment System's performance and maintenance history beginning on the day of installation is very useful in diagnosing future problems. A sample Log Sheet can be found in the back of this manual. (Refer to the Table of Contents for the page location).

Instruction Sheets

1956-001	Lamp Sleeve Replacement w/Lock Nut
1957	Lamp Replacement
1958	Ballast Replacement
1970-001	Cleaning
2045	Lamp Wire Replacement
2118	UV Monitor Cable Replacement
2119	Ballast Cable Replacement
2135	Control Unit Display Replacement
2146	UV Monitor Replacement
2147	Technician Mode
2344	Ballast Replacement, 4" Unit
2458	Fuse Replacement
2459	Clean in Place, NSF 50 Compliant Units

The list of documents above can be found on the digital version of this manual, or by requesting them directly from NeoTech Aqua Solutions Inc.

Sample Operations and Maintenance Log

	Model	Part Number	Rev	Serial Number
Treatment Chamber				
Control Box				
UV Intensity Monitor				

Date	Action Performed	Performed By:
	Installation	

NeoTech Aqua Solutions, Inc., 3853 Calle Fortunada Suite B, San Diego, CA 92123
(858) 571-6590 (voice) ● (858) 571-6596 (fax)
info@neotechaqua.com ● www.neotechaqua.com

TROUBLESHOOTING

Symptom	Possible Cause	Solution
Unit is leaking water	Inlet or outlet connections are loose.	Tighten connections
	The UV chamber is damaged or not sealing properly	Disconnect system and contact distributor or factory for repair.
	The lamp sleeve is broken	Disconnect system and contact distributor or factory for repair
	The lamp sleeve is not sealed properly	Remove and reinstall sleeve per Lamp Sleeve Replacement procedure in this manual. If this is unsuccessful, contact factory.
Display does not come on when power applied to the unit.	Power to the control box is interrupted	Check all electrical connections and breakers to ensure power is available at the unit
	Main Control Box fuse has blown	Find and correct any faults which would lead to this fuse blowing, then replace the fuse. If the fuse still blows, contact distributor or factory for repair.
	Microprocessor has failed	Contact distributor or factory for repair/replacement
Front panel display has spurious characters or does not appear after power applied	Display has been corrupted by noise	Wait 5 seconds for the display to refresh. If it does not, open the front of the box and press the reset button as described in the Operations section. **Note:** This will momentarily turn the lamps off.
	Microprocessor has failed	Contact distributor or factory for repair/replacement
"Intensity" or "Dosimetry" display stays at zero for a particular chamber, or "Lamp Status" display says REPLC for a particular lamp prematurely	Remote Start not activated	Ensure that Remote Start is wired correctly and that +24VDC is present
	Lamp is damaged	Replace lamp. NOTE: Frequent power cycling (> 2-3 times per week) can lead to premature lamp or ballast failure.
	Ballast is damaged	Replace ballast. NOTE: Frequent power cycling (> 2-3 times per week) can lead to premature lamp or ballast failure.
	Line fuse for that chamber has blown	Find and correct any faults which would lead to this fuse blowing, then replace the fuse. If the fuse still blows, contact distributor or factory for repair.
	Power is not being applied to the ballast	Contact distributor or factory for repair/replacement
	UV Intensity Monitor is damaged	Contact distributor or factory for repair/replacement
"Intensity" or "Dosimetry" display is not zero but is lower than normal/ Alarm is detected	Water quality has deteriorated beyond specified limits	After water quality is restored, unit should be flushed and refilled with water, then restarted as normal. If the condition persists, unit may require cleaning. In this case, contact distributor or factory.
	Lamp needs replacement	Replace lamp. NOTE: Frequent power cycling (> 2-3 times per week) can lead to premature lamp or ballast failure.
	Lamp sleeve needs cleaning or replacement	Clean or replace lamp sleeve per Lamp Sleeve Replacement procedure in this manual. If this is unsuccessful, contact factory.
	Chamber needs cleaning	Contact distributor or factory for cleaning instructions

SPARE PARTS

Always use genuine NeoTech Aqua Solutions replacement parts for proper system performance and to ensure warranty coverage remains intact.

Spare Type	Part Number	Applicable Systems	Description
Lamp Replacement Kits	LK-22	T222, D322	Spare Lamp Kit, 22 in., 185 / 254 nm
	LK-28	T228, D328, D428	Spare Lamp Kit, 28 in., 185 / 254 nm
	LK-38	T238, D338, D438	Spare Lamp Kit, 38 in., 185 / 254 nm
	LK-22-D*	D222, D322	Spare Lamp Kit, 22 in., 254 nm
	LK-28-D*	D228, D328, D428	Spare Lamp Kit, 28 in., 254 nm
	LK-38-D*	D238, D338, D438	Spare Lamp Kit, 38 in., 254 nm
Lamp Sleeve Replacement Kits	QSK-22	D222, T222, D322	Spare Lamp Sleeve Kit, 22 in.
	QSK-28	D228, T228, D328, D428	Spare Lamp Sleeve Kit, 28 in.
	QSK-38	D238, T238, D338, D438	Spare Lamp Sleeve Kit, 38 in.
Ballast Replacement Kits	BK-120	D222, T222, D322,D228, T228, D328, D238, T238, D338	Spare Ballast Kit, 120 V
	BK-230	D222, T222, D322,D228, T228, D328, D238, T238, D338	Spare Ballast Kit, 230 V
	BK-120-2	D428, D438	Spare Ballast Kit, 120 V, Dual
	BK-230-2	D428, D438	Spare Ballast Kit, 230 V, Dual
UV Intensity Monitor	UVIM-CAL	All Units	UV Monitor Calibration
	UVIM-3	All Units	UV Monitor
Control Unit Fuse Kit	FK-3	All Units	Fuse Kit
Control Unit	CU-X1	All Units	Control Box, X - number of UV Systems, 120V
	CU-X2	All Units	Control Box, X - number of UV Systems, 230V

*Ozone Free Lamps

Hg

UV lamps contain mercury.
DO NOT put UV lamps in trash.
Recycle or dispose as hazardous waste.

For recycling information in the USA:
www.lamprecycle.org or call 1-866-457-6697.
Outside the USA, consult local government agencies for proper disposal procedures.

WARNING
This product contains a chemical known to
the State of California to cause birth defects or
other reproductive harm.

SPECIFICATIONS

Treatment Chamber

Unit Sizing:

- UV systems will be sized based by the following system requirements
    - Flow rate
    - Dose
        - 30 mJ/cm² for disinfection, minimum recommended dose
        - 300 mJ/cm² for TOC reduction
    - Percent UV transmissivity at 254 nm
    - Water temperature

Treatment Dose:

- Disinfection
    - 30 mJ/cm^2 dose at maximum rated flow at end of lamp life (9000 hrs.)
    - 4-log inactivation of microorganisms
    - Lamp must have a 254 nm peak
- TOC reduction
    - 300 mJ/cm2 dose at maximum rated flow at end of lamp life (9000 hrs.)
    - 1-log reduction
    - Lamp must have a 185 nm peak

Temperature:

- 35 °F (2 °C) min; 140 °F (60 °C) max operating temperature
- Steam sterilize with pure steam up to 257 °F (125 °C) without turning off the lamps for up to 1 hour
- Hot water sanitization for up to 1 hr. without turning off the lamps
- Longer sanitization processes will require lamp cycling or diming
- System can withstand no flow condition for 1 hour
- Temperature monitoring is not required

Number of Lamps:

- One low pressure amalgam long life lamp for flows below 300 gpm of disinfection
- Two low pressure amalgam long life lamps for flows between 300 and 500 gpm of disinfection
- A minimum of 9000 hrs. of lamp life, under normal operating conditions
- Lamp compartment is sealed to prevent ozone leakage

Maximum Pressure:

- 150 psi, both static and transient

Pressure/Flow Properties:

Neotech Aqua Model	Pressure Drop @ Rated flow PSI (Bar)	Rated Flow GPM (m^3/Hr)
T-222	0.1 (0.01	10 (2.3)
T-228	0.2 (0.02)	15 (3.4)
T-238	0.3 (0.03)	20 (4.5)
D-222	0.8 (0.07)	35 (8.0)
D-228	2.8 (0.24)	50 (11.4)
D-238	5.2 (0.45)	65 (15.0)
D-322	2.5 (0.22)	100 (22.7)
D-328	6.5 (0.56)	150 (34.0)
D-338	14.4 (1.25)	225 (51.1)
D-428	2.8 (0.24)	300 (68.0)
D-438	10.9 (0.95)	500 (90.8)

Materials:

- Water contact materials
  - 316L stainless steel, with an Ra 15 finish (electropolished and passivated)
  - Synthetic quartz
  - PTFE (Teflon)
  - Viton
- The UV chamber exterior surfaces are made of 304 stainless steel.
- The chamber shall reflect 99% of the UV light back into the water stream

Plumbing and connections:

- The units are provided with sanitary tri-clamp fittings
- The treatment chamber can be mounted in any configuration required for the application, horizontal or vertical
- Entry and exit connections can be rotated to minimize and simplify plumbing

Hydraulics

- Water shall enter and leave at 45 deg angle to eliminate the need for straight pipe runs
- The internal flow shall be designed to provide turbulent and plug flow to assure equal treatment to the flow

UV Monitor

- Calibration is NIST traceable
- The UV monitor is not in contact with the water
- The UV monitor does not interfere with the flow of the water

Control Box

General:

- The control box is capable of operating up to 4 treatment chambers, with each treatment chamber having independent controls and diagnostics

Electrical:

Input voltage: 120VAC ± 10% or 230 VAC ± 10%
Input frequency: 50/60 Hz
Input current: 1 – 10.5 A depending on the input voltage and the quantity of treatment chambers connected
Power: 100 – 308 W depending on unit size, per chamber

Controls:

- Remote Run/Stop: +24 VDC ± 10%; 4 channels
- 4-20 mA signal proportional to UV intensity monitor output; up to 4 channels
- Fault code: Parallel, 3 bit, dry contact closure signal indicating system faults using the following code (1 = contacts closed, 0 = contacts open):

Display:

- 4 line LED Display provides indication of Power on/off, lamp status, UV Intensity mW/cm^2] or UV dose [mJ/cm^2], fault alarm settings, total hours of operation, hours of current lamp operation, alarm status
- Lamp status LED
- Power LED
- UV output display selectable
    - Lamp OK or not (go no-go) display
    - Lamp intensity in mW/cm^2
    - System dosage in mJ/cm^2

Physical:

- L x W x H: 8” x 4” x 10” (203mm x 102mm x 254mm)
- 9.5 lbs. (4.3 kg)
- NEMA 4X rating

Certifications

- Safety - CE, UL/NRTL, CSA NRTL, TUV listing, and CB report
- NSF-61

Maintenance

Lamps:

- Lamps to be changed as required through NIST traceable monitoring, or annually. More frequent changes may be required if the power is cycled more than once a day
- The lamps can be replaced without the use of tools
- The lamp change is a dry process

UV Monitor:

- The UV monitor is calibrated to a NIST traceable source
- The monitor should be calibrated annually
- The UV monitor change is a dry process

Cleaning:

- Depending on the water conditions the system may require periodic cleaning of the lamp sleeves and flow tube
- Cleaning can be accomplished as a CIP process or mechanically by removing the unit from the flow
- Cleaning may be accomplished by hot water or steam cleaning

Environmental:

Indoor use only; must be shaded/sheltered from sunlight and precipitation
Ambient Temperature range: 35 °F (2 °C) min; 110 °F (49 °C) max
Humidity: up to 95% RH, noncondensing
Equipment designed to meet NEMA 12 and IP 53 standards

Physical:

UV chamber: Dependent upon system rating and configuration
Control Box: L x W x H: 8" x 4" x 10" (203mm x 102mm x 254mm) ; 9.5 lbs. (4.3 kg)
Shipping weight: Dependent upon system rating and configuration
Materials of construction: The UV chamber exterior surfaces are made of stainless steel. The control box is made of either stainless steel or reinforced plastic, depending on customer requirements. The water contact surfaces consist exclusively of electro polished and passivated 316L stainless steel, synthetic quartz, PTFE (Teflon), and Viton elastomer.

Certifications:

CE, UL/NRTL, CSA equivalent, and TUV listing.

LIMITED WARRANTY

NeoTech Aqua Solutions (NTAS) warrants your UVS Water Purification System (Equipment) to be free from defects in material and workmanship for a period of one (1) year from the date of installation, or eighteen (18) months from date of purchase (whichever is shorter), by the original owner (Customer). The warrantor will, at his option and expense, either repair or replace such units subject to the following conditions, exceptions, and exclusions.

This warranty shall not apply to any failure or defect which results from the Equipment not being operated and maintained in strict accordance with instructions specified in the Operation and Maintenance manual, or which results from mishandling, misuse, neglect, improper storage, improper operation of the Equipment with other equipment furnished by the Customer or other third parties, or defects in designs or specifications furnished by or on behalf of the Customer by a person other than NTAS. In addition, this warranty shall not apply to Equipment that has been altered or repaired after start-up by anyone except: (a) authorized representatives of NTAS, or (b) Customer acting under specific instructions from NTAS.

Customer must notify NTAS in writing within 5 days of the date of any Equipment failure. This notification shall include a description of the problem, a copy of the operator's log, a copy of the Customer's maintenance record and any analytical results detailing the problem. If Customer has not maintained the operator's log and maintenance record in the manner directed in the Operation and Maintenance manual, or does not notify NTAS of the problem as specified above, this warranty may, at NTAS's discretion, be invalid.

Customer will fully cooperate with NTAS, in the manner requested by NTAS, in attempting to diagnose and resolve the problem by way of telephone support. If the problem can be diagnosed by telephone support and a replacement part is required NTAS will either, at NTAS's expense, ship a repaired, reworked or new part to the Customer who will install such part as directed by NTAS or will direct Customer to acquire, at NTAS’s expense, such part from a third party and then install such part as directed by NTAS.

In the event that NTAS determines that the problem cannot be resolved by way of telephone support and/or shipment by NTAS, or acquisition by the Customer, of a replacement part for installation by the Customer, NTAS will send one or more persons to make an onsite inspection. If an onsite visit is made, NTAS personnel will evaluate the problem and repair or replace any Equipment determined to be in breach of this warranty. If the problem is not attributable to a breach of this warranty, NTAS reserves the right to invoice the Customer for this service.

Equipment components manufactured by third parties but furnished to Customer by NTAS are warranted by the original manufacturer, only to the extent of the original manufacturer's warranty, and are not covered by the above warranty.

This warranty is the exclusive remedy for all claims based on a failure of or defect in the Equipment, whether the claim is based on contract (including fundamental breach), tort (including negligence), strict liability, or otherwise. This warranty is in lieu of all other warranties whether written, oral, implied or statutory. Without limitation, no warranty of merchantability or fitness for a particular purpose shall apply to the Equipment.

NTAS does not assume any liability for personal injury or property damage caused by use or misuse of Equipment. NTAS shall not in any event be liable for special, incidental, indirect or consequential damages including, without limitation, lost profits, lost business opportunities, lost revenue or loss or depreciation of goodwill, even if it has been advised of the possibility thereof. NTAS's liability shall, in all instances, be limited to repair or replacement of Equipment in breach of this warranty and shall not exceed the cost of such repair or replacement. This liability with respect to repair or replacement will terminate upon the expiration date of this warranty.

In addition to the foregoing, in no event shall NTAS's liability relating to the Equipment, or the agreement between NTAS and the Customer relating to the Equipment, exceed that portion of the purchase price for the Equipment which is actually paid to NTAS.

Any of the following conditions will void the equipment warranty:

1. Failure to connect proper electrical service to unit.

2. Failure to properly ground the unit.

3. Failure to eliminate excessive vibration, piping, movement, or “water hammer”.

4. Failure to exercise caution in the handling of the sensitive and delicate components (such as lamps, quartz sleeves, electronic boards, etc.) during installation and/or maintenance procedures.

5. Failure to avoid excessive stops and starts. Not more than three (3) “ON/OFF” cycles per 24 hours of operation.

6. Operation of visibly damaged equipment.

7. Failure to avoid undue overhead piping stress, which can result in structural damage to the UV unit. Limit the load to 25 lbs, for 2” & 3”, 50 lbs, for 4” and 75 lbs, for 6” or above. Torsion loads or side loading of the risers should be eliminated.

8. Use of components other than those provided or authorized by NTAS.

9. Failure to correct overhead piping connection leaks or compression nut seal leaks which result in damage to the electrical components.

10. Allowing operating water temperature to exceed 120°F.

CONDITIONS, EXCEPTIONS, AND EXCLUSIONS

The foregoing limited Warranty is subject to the following terms and conditions:

1. This limited Warranty shall not apply to any unit which has been repaired or altered by anyone other than the Warrantor or by a person authorized by the Warrantor, nor to any units which have been subject to misuse, neglect, or accident.
2. This limited Warranty runs exclusively to the original Customer and with respect to the original installation only.
3. WARRANTOR SHALL NOT BE LIABLE FOR ANY INCIDENTAL OR CONSEQUENTIAL DAMAGES.
4. This limited Warranty excludes the cost of labor in removing any defective unit or installing any replacement unit.

Hg

UV lamps contain mercury.

DO NOT put UV lamps in trash. Recycle or dispose as hazardous waste.or recycling information in your area: www.lamprecycle.org or call 1-866-457-6697.

WARNING

This product contains a chemical known tothe State of California to cause birth defects or other reproductive harm.

For Service, contact your local distributor or contact NeoTech Aqua Solutions directly:

NeoTech Aqua Solutions, Inc., 3853 Calle Fortunada, Suite B, San Diego, CA 92123
(858) 571-6590 (voice) ● (858) 571-6596 (fax)
info@neotechaqua.com ● www.neotechaqua.com

Copyright 2007-2011 by NeoTech Aqua Solutions, Inc. All rights reserved

Appendix A.

Equipment Certificates

ZERTIFIKAT • CERTIFICATE • 認證證書 • СЕРТИФИКАТ • CERTIFICADO • CERTIFICAT

America

CERTIFICATE

No. U8 16 05 95524 002

Holder of Certificate: **Neotech Aqua Solutions, Inc.**
3853 Calle Fortunada, suite B
San Diego CA 92123
USA

Certification Mark:

C US

Product: **Water treatment equipment (UV Water Purification Systems)**

The product was voluntarily tested according to the relevant safety requirements noted above. It can be marked with the certification mark above. The mark must not be altered in anyway. This product certification system operated by TÜV SÜD America Inc. most closely resembles system 3 as defined in ISO/IEC Guide 67. Certification is based on the TÜV SÜD "Testing and Certification Regulations". TÜV SÜD America Inc. is an OSHA recognized NRTL and a Standards Council of Canada accredited certification body.

Test report no.: 095-72114894-000

Valid until: 2021-05-19

Date, 2016-06-04

Page 1 of 6

627095

TÜV SÜD AMERICA INC • 10 Centennial Drive • Peabody, MA 01960 USA • www.TUVamerica.com

UCB_F_12.02 2012-02

NSF International

OFFICIAL LISTING

NSF International Certifies that the products appearing on this Listing conform to the requirements of NSF/ANSI Standard 61 - Drinking Water System Components - Health Effects

This is the Official Listing recorded on April 19, 2016.

NeoTech Aqua Solutions, Inc.
3853 Calle Fortunada
San Diego, CA 92123
888-718-5040
858-571-6590

Facility: San Diego, CA

Mechanical Devices

Trade Designation	Size	Water Contact Temp	Water Contact Material
Ultra-Violet Reactors [1] [2] [G]			
Magnum	6"	CLD 23	MLTPL
NeoTech D222	1 1/2"	CLD 23	MLTPL
NeoTech D228	1 1/2"	CLD 23	MLTPL
NeoTech D238	1 1/2"	CLD 23	MLTPL
NeoTech D322	1 1/2"	CLD 23	MLTPL
NeoTech D328	2"	CLD 23	MLTPL
NeoTech D338	2"	CLD 23	MLTPL
NeoTech D428-X	3"	CLD 23	MLTPL
NeoTech D438-X	3"	CLD 23	MLTPL
Neotech D860-X	6"	CLD 23	MLTPL
NeoTech T222	1 1/2"	CLD 23	MLTPL
NeoTech T228	1 1/2"	CLD 23	MLTPL
NeoTech T238	1 1/2"	CLD 23	MLTPL

[1] Certified for a minimum daily flow rate of 2,400 gallons.

[2] X indicates the number of lamps and can be any of the following: 2, 4, 6, or 8.

[G] Product is Certified to NSF/ANSI 372 and conforms with the lead content requirements for "lead free" plumbing as defined by California, Vermont, Maryland, and Louisiana state laws and the U.S. Safe Drinking Water Act.

Note: Additions shall not be made to this document without prior evaluation and acceptance by NSF International.

C0120416

789 N. Dixboro Road, Ann Arbor, Michigan 48105-9723 USA
1-800-NSF-MARK / 734-769-8010
www.nsf.org

The Public Health and Safety Organization

NSF Product and Service Listings

NSF/ANSI 50
Equipment for Swimming Pools, Spas, Hot Tubs and Other Recreational Water Facilities

NeoTech Aqua Solutions, Inc. (http://www.neotechaqua.com)
3853 Calle Fortunada, Suite B
San Diego, CA 92123
United States
858-571-6590
Visit this company's website (http://www.neotechaqua.com)

Facility : San Diego, CA

Ultraviolet Light Process Equipment

UVS Series Reactors[1] [2] [3]

D222 D228 D238 D322 D328 D338 D428 D438[4]

[1] Certified for pool and spa/hot tub end use.
[2] Product has met the requirements of NSF Standard 50, Annex H.1: Disinfection Efficacy for the >= 3 log reduction of Enterococcus faecium [ATCC #6569] and Pseudomonas aeruginosa [ATCC #27313]. This product is intended for supplemental disinfection and should be used with registered or approved disinfection chemicals to impart residual concentrations in accordance with state and local regulations. This product has not been evaluated to the crytosporidium inactivation requirements of NSF/ANSI 50.
[3] This product has not been Certified by NSF to the requirements of the National Electrical Code or electrical product safety standards.
[4] UV system with model designation D438 is NSF Certified for pool and spa end use at a maximum working pressure of 50p.s.i.
The D438 system type is a stainless steel reactor vessel with a monochromatic UV lamp utilizing an in-place chemical cleaning system.
The D438 has met the NSF/ANSI Standard 50 3-log (or better) cryptosporidium inactivation requirements under the following conditions:
Maximum flow rate of 150gpm at 91-96% or greater UVT when the sensor reading is 7.6 (mW/cm2) or greater.
Maximum flow rate of 251gpm at 95-96% or greater UVT when the sensor reading is 10.0 (mW/cm2) or greater.
Maximum flow rate of 470gpm at 96-98% or greater UVT when the sensor reading is 12.5 (mW/cm2) or greater.
Maximum flow rate of 500gpm at 90-98% or greater UVT when the sensor reading is 12.4 (mW/cm2) or greater.

Number of matching Manufacturers is 1
Number of matching Products is 8
Processing time was 0 seconds

1 of 1

DECLARATION OF CONFORMITY

Issued by:

Ultraviolet Sciences, Inc.
9189 Chesapeake Drive
San Diego, CA 92103, USA

We declare under our sole responsibility that the product

HRC Series of ultraviolet water purification systems

to which this declaration relates is in conformity with the following standard(s) or other normative document(s)

IEC 61010, EN61000-6-2, EN61000-6-4, EN610003-2

Authorized by:

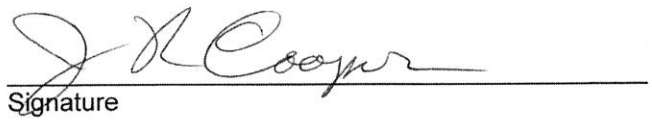

Signature

June 13, 2008

James R. Cooper
President
Ultraviolet Sciences, Inc.

Appendix B.

Mounting Diagrams for NTAS Chambers and Control Box

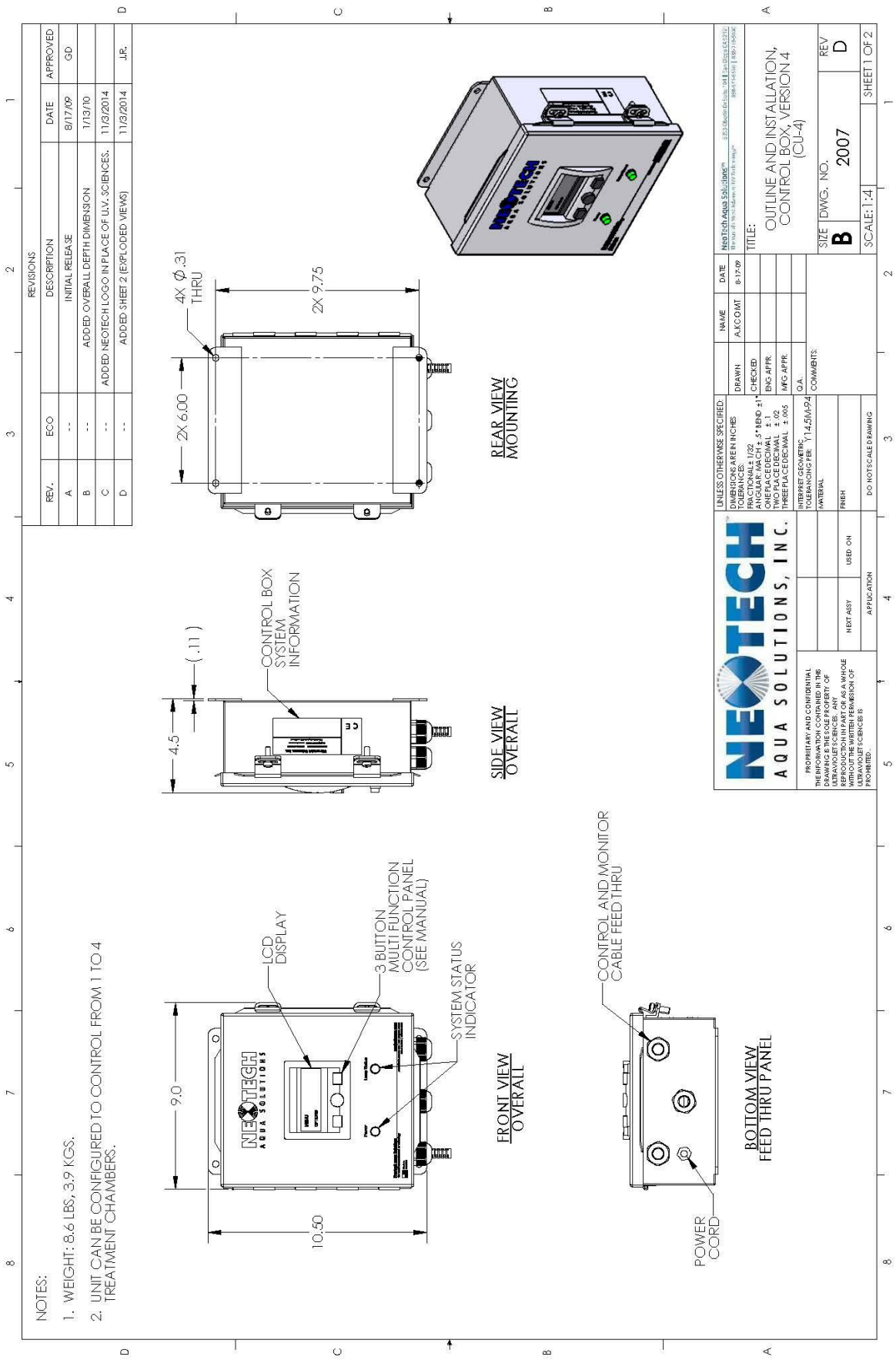
NOTES:
1. WEIGHT: 8.6 LBS, 3.9 KGS.
2. UNIT CAN BE CONFIGURED TO CONTROL FROM 1 TO 4 TREATMENT CHAMBERS.
REVISIONS
REV. | ECO | DESCRIPTION | DATE | APPROVED
A | -- | INITIAL RELEASE | 8/17/09 | GD
B | -- | ADDED OVERALL DEPTH DIMENSION | 1/13/10
C | -- | ADDED NEOTECH LOGO IN PLACE OF U.V. SCIENCES. | 11/3/2014
D | -- | ADDED SHEET 2 (EXPLODED VIEWS) | 11/3/2014 | J.R.
9.0
10.50
LCD DISPLAY
3 BUTTON MULTI FUNCTION CONTROL PANEL (SEE MANUAL)
SYSTEM STATUS INDICATOR
FRONT VIEW OVERALL
4.5
(.11)
CONTROL BOX SYSTEM INFORMATION
SIDE VIEW OVERALL
2X 6.00
4X Ø.31 THRU
2X 9.75
REAR VIEW MOUNTING
CONTROL AND MONITOR CABLE FEED THRU
POWER CORD
BOTTOM VIEW FEED THRU PANEL
NEOTECH AQUA SOLUTIONS, INC.
UNLESS OTHERWISE SPECIFIED:
DIMENSIONS ARE IN INCHES
TOLERANCES:
FRACTIONAL ± 1/32
ANGULAR: MACH ± .5° BEND ±1°
ONE PLACE DECIMAL ± .1
TWO PLACE DECIMAL ± .02
THREE PLACE DECIMAL ± .005
INTERPRET GEOMETRIC TOLERANCING PER: Y14.5M-94
MATERIAL
FINISH
DO NOT SCALE DRAWING
NEXT ASSY
USED ON
APPLICATION
PROPRIETARY AND CONFIDENTIAL
THE INFORMATION CONTAINED IN THIS DRAWING IS THE SOLE PROPERTY OF ULTRAVIOLET SCIENCES. ANY REPRODUCTION IN PART OR AS A WHOLE WITHOUT THE WRITTEN PERMISSION OF ULTRAVIOLET SCIENCES IS PROHIBITED.
NAME | DATE
DRAWN | A.KCOMT | 8-17-09
CHECKED
ENG APPR.
MFG APPR.
Q.A.
COMMENTS:
NeoTech Aqua Solutions™
TITLE:
OUTLINE AND INSTALLATION, CONTROL BOX, VERSION 4 (CU-4)
SIZE B
DWG. NO. 2007
REV D
SCALE: 1:4
SHEET 1 OF 2

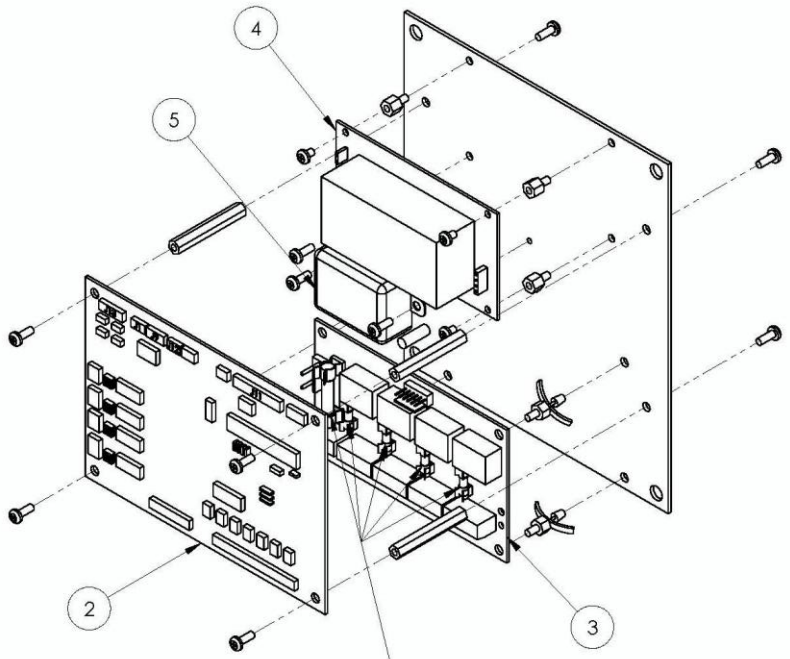

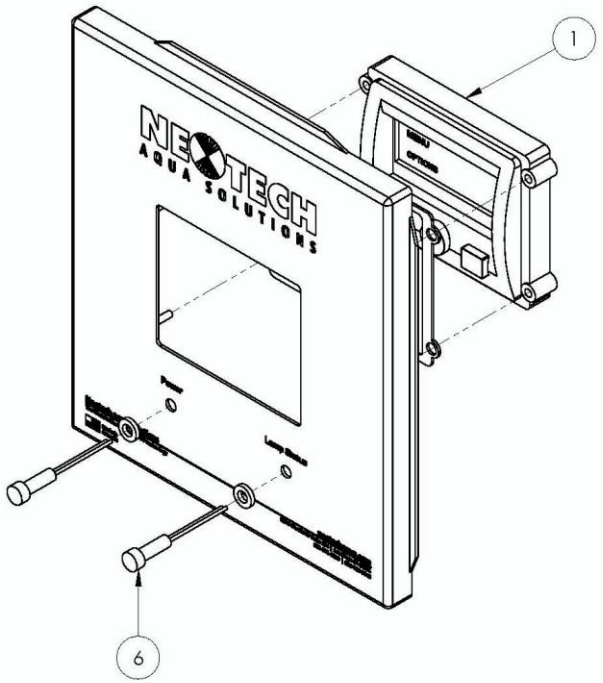

ITEM NO.	QTY.	DESCRIPTION
1	1	DISPLAY
2	1	CONTROL PCBA
3	1	POWER PCBA (SEE NOTE 2)
4	1	POWER SUPPLY
5	1	POWER LINE FILTER
6	2	POWER/STATUS L.E.D.

NOTES:

1. EXCEPT FOR FUSES, NONE OF THE CONTROL PARTS GENERALLY NEED REPLACING. CALL FACTORY FOR ASSISTANCE, IF NEEDED.
2. FUSES ARE LOCATED ON THIS BOARD. FOR SPARES, ORDER PART NUMBER: FK-1.

PROPRIETARY AND CONFIDENTIAL
THE INFORMATION CONTAINED IN THIS DRAWING IS THE SOLE PROPERTY OF ULTRA VIOLET SCIENCES. ANY REPRODUCTION IN PART OR AS A WHOLE WITHOUT THE WRITTEN PERMISSION OF ULTRA VIOLET SCIENCES IS PROHIBITED.

NEOTECH AQUA SOLUTIONS, INC.

SIZE	DWG. NO.	REV
B	2007	D
SCALE: 1:2		SHEET 2 OF 2

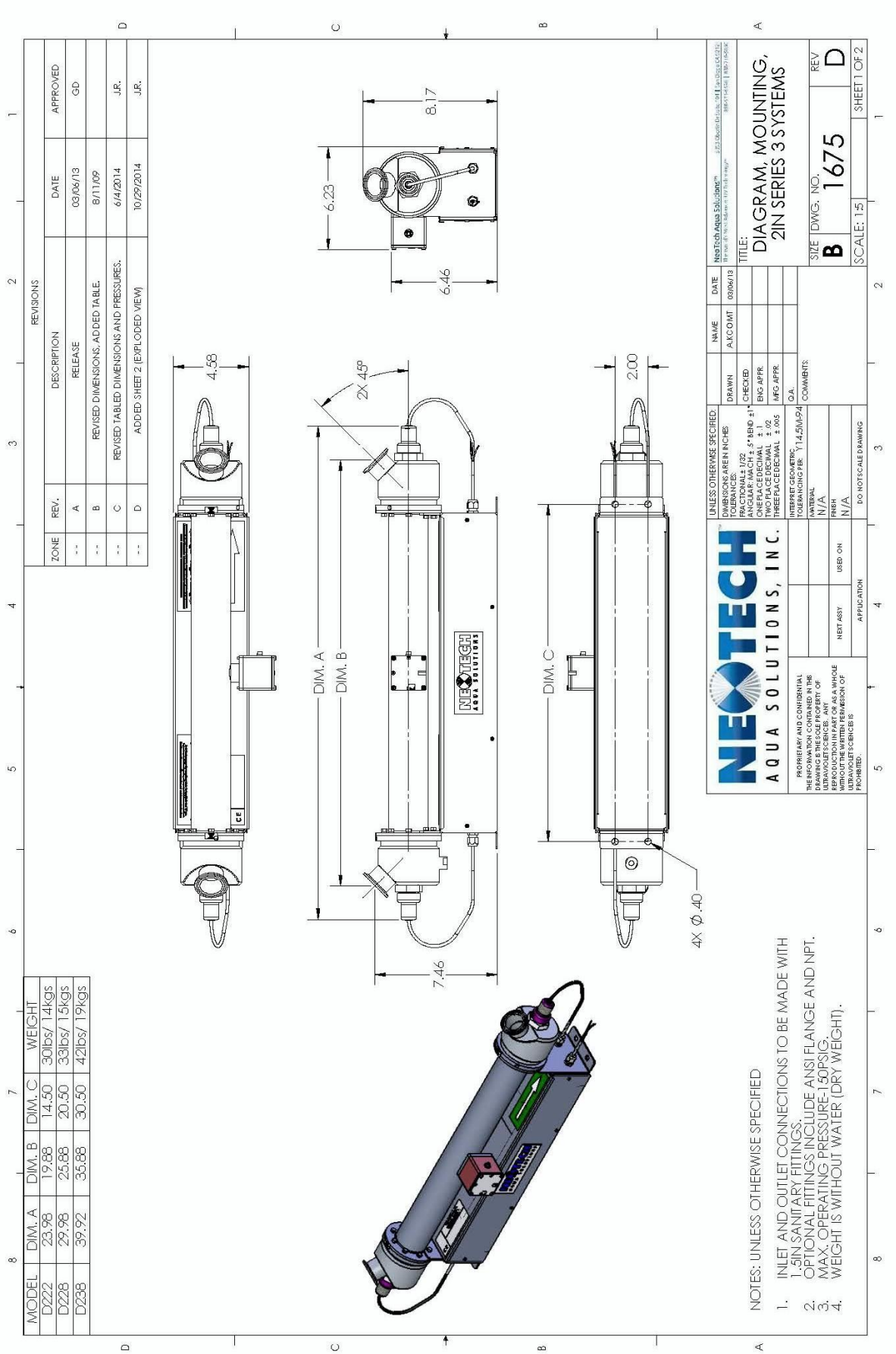
REVISIONS
ZONE | REV. | DESCRIPTION | DATE | APPROVED
-- | A | RELEASE | 03/06/13 | GD
-- | B | REVISED DIMENSIONS, ADDED TABLE. | 8/11/09 |
-- | C | REVISED TABLED DIMENSIONS AND PRESSURES. | 6/4/2014 | J.R.
-- | D | ADDED SHEET 2 (EXPLODED VIEW) | 10/29/2014 | J.R.
MODEL | DIM. A | DIM. B | DIM. C | WEIGHT
D222 | 23.98 | 19.88 | 14.50 | 30lbs/ 14kgs
D228 | 29.98 | 25.88 | 20.50 | 33lbs/ 15kgs
D238 | 39.92 | 35.88 | 30.50 | 42lbs/ 19kgs
NOTES: UNLESS OTHERWISE SPECIFIED
1. INLET AND OUTLET CONNECTIONS TO BE MADE WITH 1.5IN SANITARY FITTINGS.
2. OPTIONAL FITTINGS INCLUDE ANSI FLANGE AND NPT.
3. MAX. OPERATING PRESSURE-150PSIG.
4. WEIGHT IS WITHOUT WATER (DRY WEIGHT).
4.58
2X 45°
DIM. A
DIM. B
7.46
DIM. C
2.00
4X Ø.40
6.23
8.17
6.46
NEOTECH AQUA SOLUTIONS, INC.
UNLESS OTHERWISE SPECIFIED
DRAWN A.KOOMT 03/06/13
CHECKED
ENG APPR.
MFG APPR.
Q.A.
COMMENTS:
NEXT ASSY
USED ON
APPLICATION
DO NOT SCALE DRAWING
NeoTech Aqua Solutions
TITLE:
DIAGRAM, MOUNTING, 2IN SERIES 3 SYSTEMS
SIZE B
DWG. NO. 1675
REV D
SCALE: 1:5
SHEET 1 OF 2

NOTES:

1. SPARE LAMPS AND LAMP SLEEVE KITS INCLUDE THE NECESSARY O-RINGS.
2. GENERALLY DOES NOT NEED REPLACEMENT. CALL FACTORY, IF REQUIRED.
3. NEVER REMOVE END CONNECTORS.

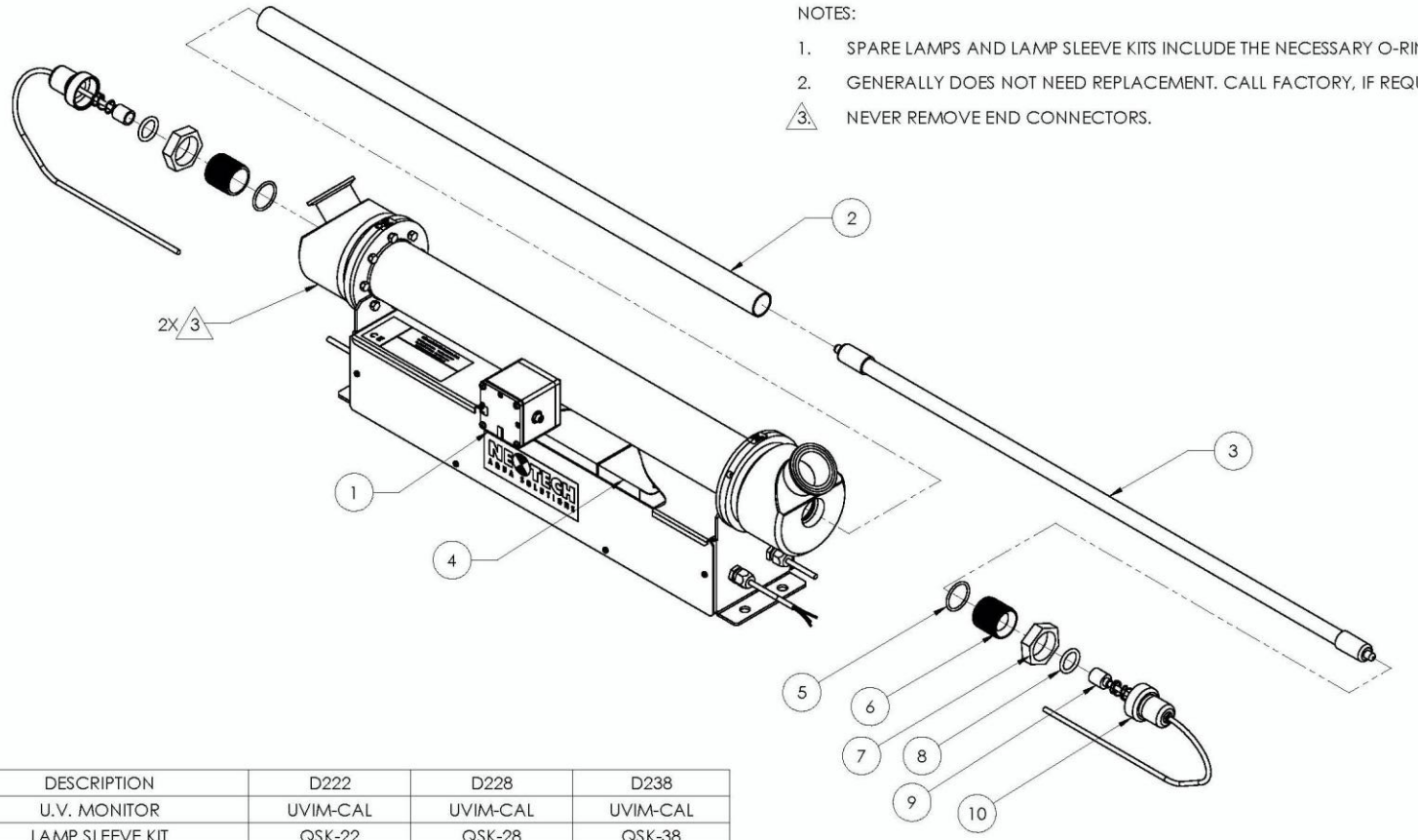

ITEM NO.	QTY.	DESCRIPTION	D222	D228	D238
1	1	U.V. MONITOR	UVIM-CAL	UVIM-CAL	UVIM-CAL
2	1	LAMP SLEEVE KIT	QSK-22	QSK-28	QSK-38
3	1	LAMP KIT	LK-22	LK-28	LK-38
4	1	BALLAST KIT	BK-120/BK-230	BK-120/BK-230	BK-120/BK-230
5	2	LAMP SLEEVE O-RING	SEE NOTE 1	SEE NOTE 1	SEE NOTE 1
6	2	END COUPLER	SEE NOTE 2	SEE NOTE 2	SEE NOTE 2
7	2	LOCKING RING	SEE NOTE 2	SEE NOTE 2	SEE NOTE 2
8	2	LAMP O-RING	SEE NOTE 1	SEE NOTE 1	SEE NOTE 1
9	2	LAMP WIRE WITH CONNECTOR	SEE NOTE 2	SEE NOTE 2	SEE NOTE 2
10	2	LAMP CAP	SEE NOTE 2	SEE NOTE 2	SEE NOTE 2

PROPRIETARY AND CONFIDENTIAL
THE INFORMATION CONTAINED IN THIS DRAWING IS THE SOLE PROPERTY OF ULTRAVIOLET SCIENCES. ANY REPRODUCTION IN PART OR AS A WHOLE WITHOUT THE WRITTEN PERMISSION OF ULTRAVIOLET SCIENCES IS PROHIBITED.

NEOTECH AQUA SOLUTIONS, INC.

SIZE	DWG. NO.	REV
B	1675	D
SCALE: 1:4		SHEET 2 OF 2

MODEL	DIM. A	DIM. B	DIM. C	WEIGHT
D322	24.11	19.59	13.68	38lbs/ 17kgs
D328	30.11	25.59	19.68	43lbs/ 20kgs
D338	40.11	35.59	29.68	51lbs/ 23kgs

REVISIONS				
ZONE	REV.	DESCRIPTION	DATE	APPROVED
- -	A	RELEASE	06/03/08	R.M.
- -	B	REVISED DIMENSIONS, ADDED TABLE.	8/11/09	G.D.
- -	C	ADDED SHEET 2 (EXPLODED VIEW)	10/30/2014	J.R.

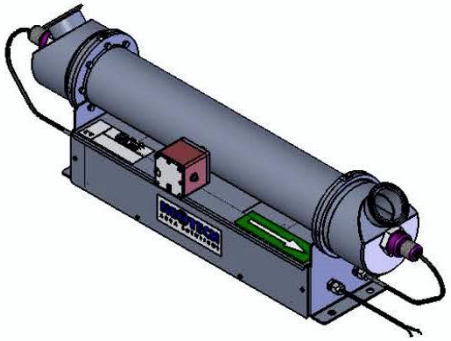

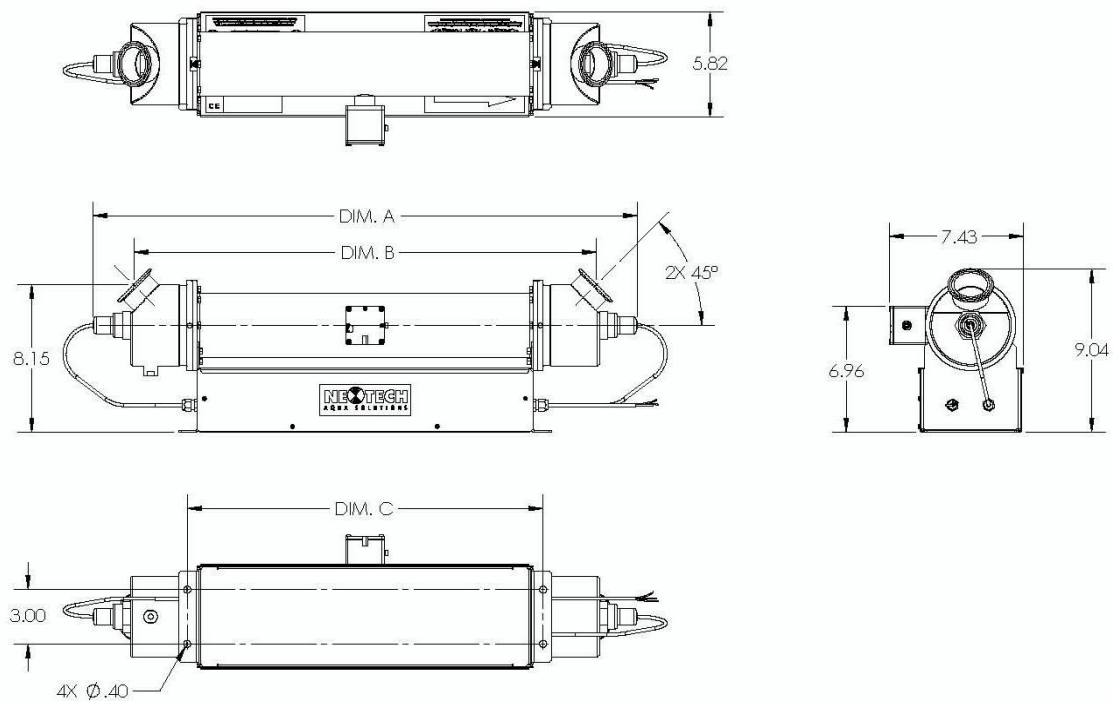

NOTES: UNLESS OTHERWISE SPECIFIED

1. INLET AND OUTLET CONNECTIONS TO BE MADE WITH 2.0IN SANITARY FITTINGS.
2. OPTIONAL FITTINGS INCLUDE ANSI FLANGE AND NPT.
3. MAX. OPERATING PRESSURE-150PSIG.
4. WEIGHT IS WITHOUT WATER (DRY WEIGHT).

NEOTECH AQUA SOLUTIONS, INC.

PROPRIETARY AND CONFIDENTIAL
THE INFORMATION CONTAINED IN THIS DRAWING IS THE SOLE PROPERTY OF ULTRAVIOLET SCIENCES. ANY REPRODUCTION IN PART OR AS A WHOLE WITHOUT THE WRITTEN PERMISSION OF ULTRAVIOLET SCIENCES IS PROHIBITED.

NEXT ASSY	USED ON
APPLICATION	

UNLESS OTHERWISE SPECIFIED:
DIMENSIONS ARE IN INCHES
TOLERANCES:
FRACTIONAL ± 1/32
ANGULAR: MACH ± .5° BEND ±1°
ONE PLACE DECIMAL ± .1
TWO PLACE DECIMAL ± .02
THREE PLACE DECIMAL ± .005
INTERPRET GEOMETRIC TOLERANCING PER: Y14.5M-94
MATERIAL
FINISH
DO NOT SCALE DRAWING

	NAME	DATE
DRAWN	R. May	6/3/08
CHECKED		
ENG APPR.		
MFG APPR.		
Q.A.		

COMMENTS:

NeoTech Aqua Solutions™
5353 Oberlin Drive Suite 104 | San Diego CA 92121
Thomas W. Mead Advanced UV Technology™ 888-571-6556 | 888-716-5000

TITLE:
DIAGRAM, MOUNTING, 3IN SERIES 3 SYSTEMS

SIZE	DWG. NO.	REV
B	1723	C

SCALE: 1:6 SHEET 1 OF 2

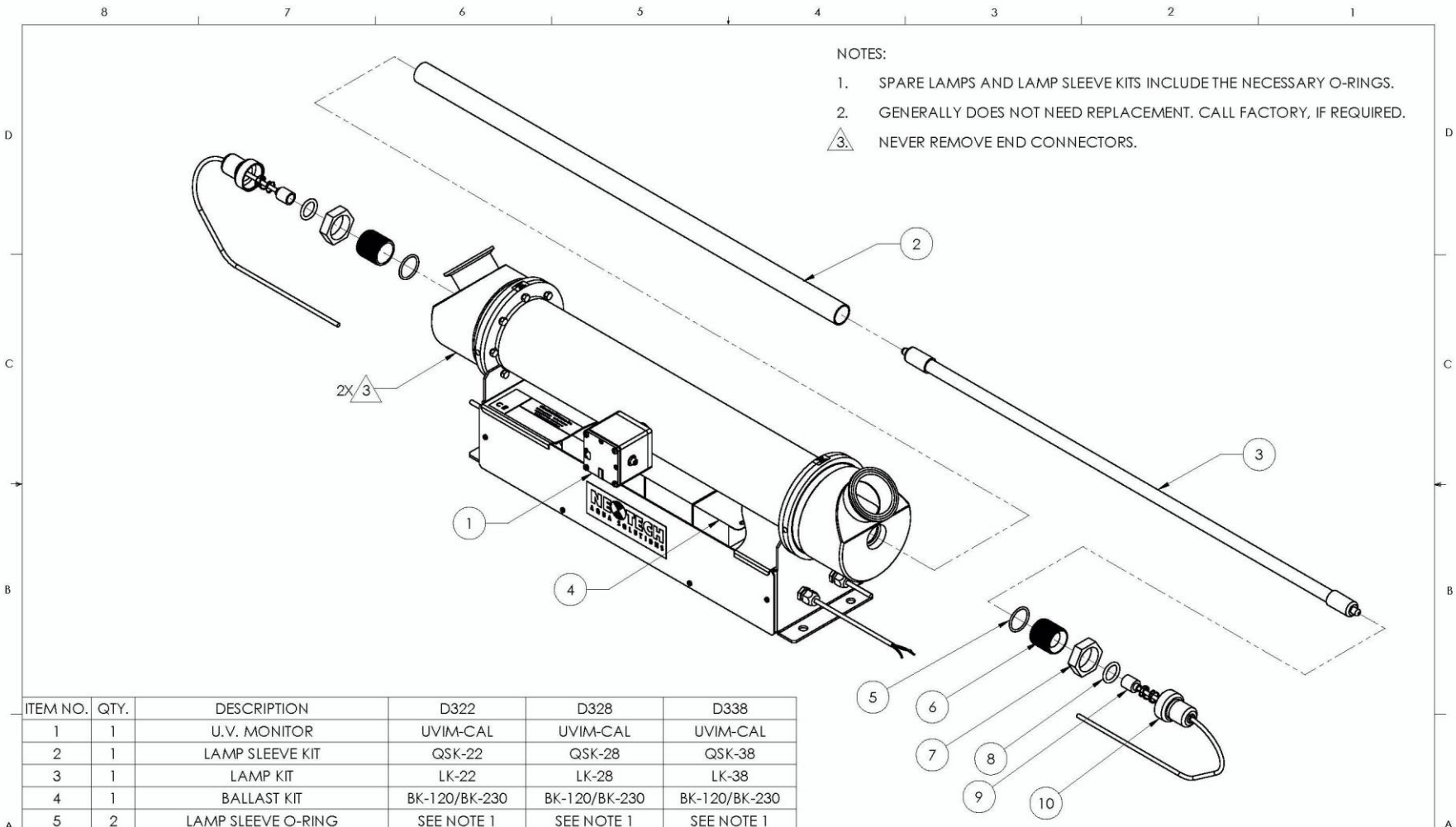

ITEM NO.	QTY.	DESCRIPTION	D322	D328	D338
1	1	U.V. MONITOR	UVIM-CAL	UVIM-CAL	UVIM-CAL
2	1	LAMP SLEEVE KIT	QSK-22	QSK-28	QSK-38
3	1	LAMP KIT	LK-22	LK-28	LK-38
4	1	BALLAST KIT	BK-120/BK-230	BK-120/BK-230	BK-120/BK-230
5	2	LAMP SLEEVE O-RING	SEE NOTE 1	SEE NOTE 1	SEE NOTE 1
6	2	END COUPLER	SEE NOTE 2	SEE NOTE 2	SEE NOTE 2
7	2	LOCKING RING	SEE NOTE 2	SEE NOTE 2	SEE NOTE 2
8	2	LAMP O-RING	SEE NOTE 1	SEE NOTE 1	SEE NOTE 1
9	2	LAMP WIRE WITH CONNECTOR	SEE NOTE 2	SEE NOTE 2	SEE NOTE 2
10	2	LAMP CAP	SEE NOTE 2	SEE NOTE 2	SEE NOTE 2

PROPRIETARY AND CONFIDENTIAL
THE INFORMATION CONTAINED IN THIS DRAWING IS THE SOLE PROPERTY OF ULTRAVIOLET SCIENCES. ANY REPRODUCTION IN PART OR AS A WHOLE WITHOUT THE WRITTEN PERMISSION OF ULTRAVIOLET SCIENCES IS PROHIBITED.

NEOTECH AQUA SOLUTIONS, INC.

SIZE	DWG. NO.	REV
B	1723	C
SCALE: 1:4		SHEET 2 OF 2

MODEL	DIM. A	DIM. B	DIM. C	WEIGHT
D428	30.55	26.95	19.53	55lbs/ 25.0kgs
D438	40.55	36.95	29.53	63lbs/ 28.6kgs

REVISIONS			
REV.	DESCRIPTION	DATE	APPROVED
B	ADDED TABLE	8/19/2009	
C	REPLACED UV SCIENCES LOGO WITH NEOTECH LOGO.	1/5/2014	
D	ADDED SHEET 2 (EXPLODED VIEW)	10/28/2014	J.R.

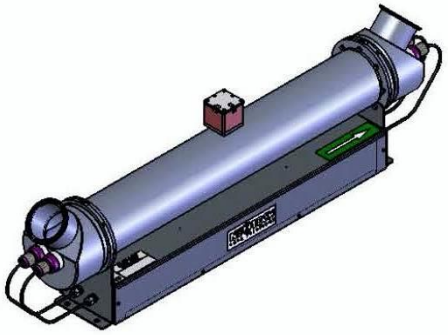

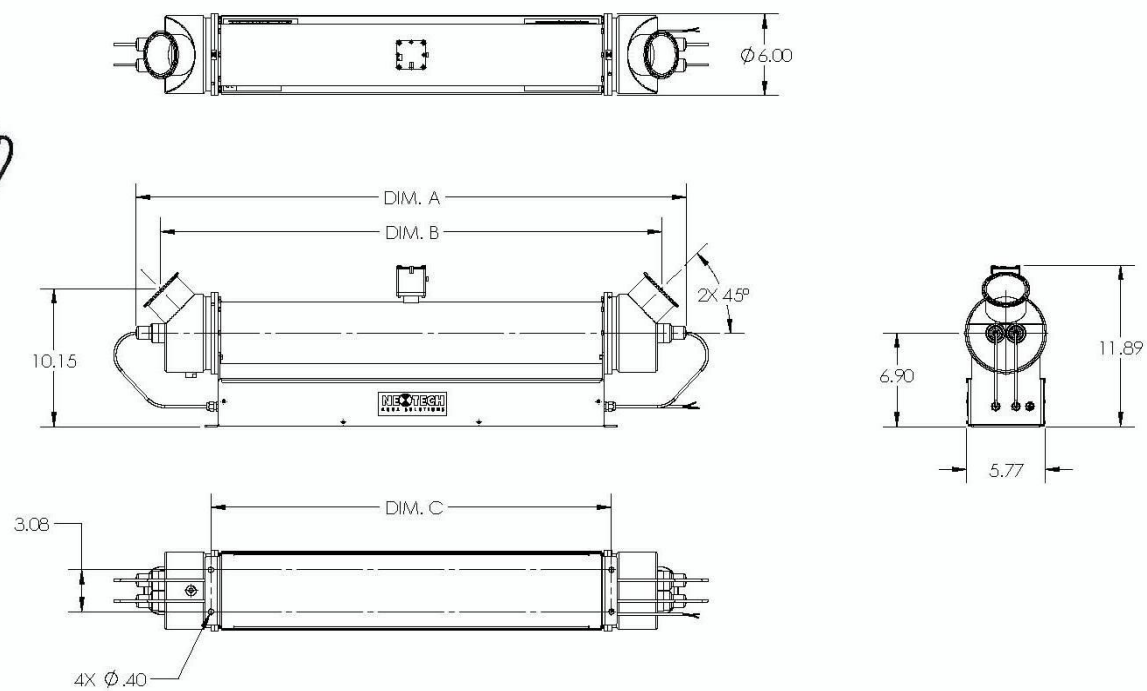

NOTES: UNLESS OTHERWISE SPECIFIED

1. INLET AND OUTLET CONNECTIONS TO BE MADE WITH 3.0IN SANITARY FITTINGS.
2. OPTIONAL FITTINGS INCLUDE ANSI FLANGE AND NPT.
3. MAX. OPERATING PRESSURE-150PSIG.
4. WEIGHT IS WITHOUT WATER (DRY WEIGHT).

NEOTECH AQUA SOLUTIONS, INC.

PROPRIETARY AND CONFIDENTIAL
THE INFORMATION CONTAINED IN THIS DRAWING IS THE SOLE PROPERTY OF ULTRAVIOLET SCIENCES. ANY REPRODUCTION IN PART OR AS A WHOLE WITHOUT THE WRITTEN PERMISSION OF ULTRAVIOLET SCIENCES IS PROHIBITED.

NEXT ASSY	USED ON
APPLICATION	

UNLESS OTHERWISE SPECIFIED:
DIMENSIONS ARE IN INCHES
TOLERANCES:
FRACTIONAL ± 1/32
ANGULAR: MACH ± .5° BEND ±1°
ONE PLACE DECIMAL ± .1
TWO PLACE DECIMAL ± .02
THREE PLACE DECIMAL ± .005
INTERPRET GEOMETRIC TOLERANCING PER: Y14.5M-94
MATERIAL
FINISH
DO NOT SCALE DRAWING

	NAME	DATE
DRAWN	J. Raub	10/20/14
CHECKED		
ENG APPR.		
MFG APPR.		
Q.A.		

COMMENTS:

NeoTech Aqua Solutions™

TITLE:
DIAGRAM, MOUNTING, 4IN SERIES 3 SYSTEMS

SIZE	DWG. NO.	REV
B	2020	D

SCALE: 1:8 SHEET 1 OF 2

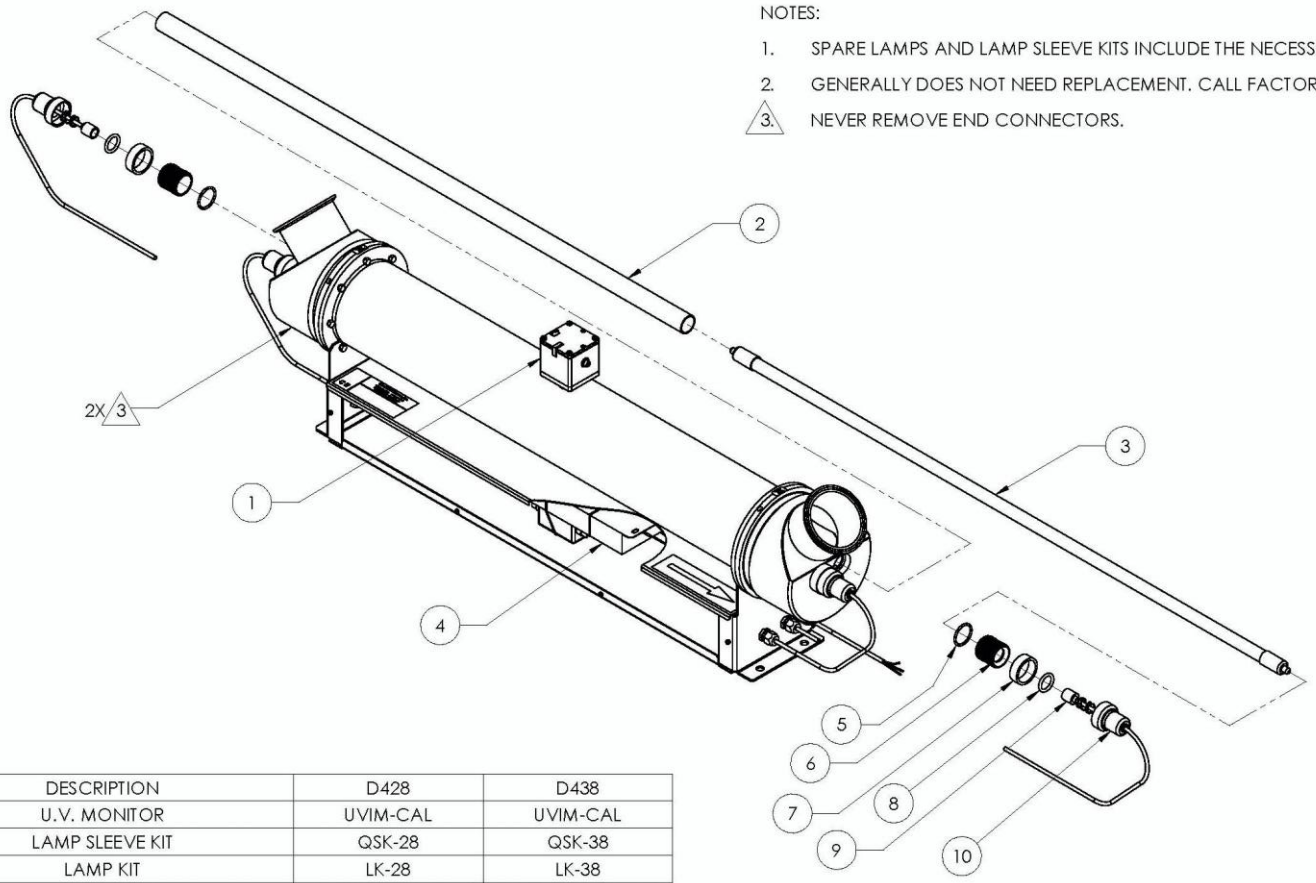

ITEM NO.	QTY.	DESCRIPTION	D428	D438
1	1	U.V. MONITOR	UVIM-CAL	UVIM-CAL
2	2	LAMP SLEEVE KIT	QSK-28	QSK-38
3	2	LAMP KIT	LK-28	LK-38
4	1	BALLAST KIT	BK-120-2, OR BK-230-2	BK-120-2, OR BK-230-2
5	4	LAMP SLEEVE O-RING	SEE NOTE 1	SEE NOTE 1
6	4	END COUPLER	SEE NOTE 2	SEE NOTE 2
7	4	LOCKING RING	SEE NOTE 2	SEE NOTE 2
8	4	LAMP O-RING	SEE NOTE 1	SEE NOTE 1
9	4	LAMP WIRE WITH CONNECTOR	SEE NOTE 2	SEE NOTE 2
10	4	LAMP CAP	SEE NOTE 2	SEE NOTE 2

PROPRIETARY AND CONFIDENTIAL
THE INFORMATION CONTAINED IN THIS DRAWING IS THE SOLE PROPERTY OF ULTRAVIOLET SCIENCES. ANY REPRODUCTION IN PART OR AS A WHOLE WITHOUT THE WRITTEN PERMISSION OF ULTRAVIOLET SCIENCES IS PROHIBITED.

NEOTECH AQUA SOLUTIONS, INC.

SIZE	DWG. NO.	REV
B	2020	D
SCALE: 3:16		SHEET 2 OF 2

OPERA – GAS DETECTORS

Version 6.2

OPERA Inc.

6000 Series

Digital Gas Monitor/Controller

OPERATION MANUAL

TABLE OF CONTENTS

1.0 General Description
- 1.1 Applications
- 1.2 Features
- 1.3 Specifications
- 1.4 User Interface

2.0 Model Selection Guide

3.0 Installation
- 3.1 Monitor Placement
- 3.2 Wiring
- 3.3 Installation Check List

4.0 Operation
- 4.1 Screen Display
- 4.2 Default Settings
- 4.3 Changing Settings
- 4.4 List of Settings
- 4.5 Sequence of Operation

5.0 Network Configuration
- 5.1 Using CAN Network, Central Controller
- 5.2 Using CAN Network No Central Controller
- 5.3 Defaults Configuration
- 5.4 Creating Zones or Groups
- 5.5 Addresses
- 5.6 Output Relays

6.0 Maintenance Guide
- 6.1 Calibration Procedure

7.0 BACnet Network Configuration

Important Information !

This manual provides information required to install, operate and maintain the series 6000 gas monitoring system. Read and study before attempting to install or operate monitors. Installation and operation not in accordance with this manual can result in a hazardous situation or harm. Relay connections may be used to control 120 Vac equipment. Ensure power is disconnected from relays before attempting to service this unit.

1.0 General Description

Series 6000 gas monitors provide air quality monitoring for commercial properties. Close monitoring of indoor air-born pollutants and automatic fresh air controls improve the health and well being of occupants and, also minimize excess ventilation, reducing both energy costs and maintenance costs. The key to maintaining this balance is a high level of precision coupled with a robust design suited to tough commercial applications.

Each 6000 monitor can measure one or two gases and control ventilation directly. They communicate with each other (up to 32) via the chain network, so some monitors activate the ventilation and others send the commands. The monitors are easily assigned to groups on site for ventilation zoning on the same network. This reduces control wiring significantly.

The use of this peer-to-peer CAN network eliminates the need for a costly controller on smaller projects. For the larger ones, a 6000-B controller or addressable relay units can be added where starters are centralized in the mechanical room. The monitors can also be tied into a BACnet building automation system by simply connecting an MS/TP cable to any monitor or 6000 controller on the CAN network. The gas readings from all the monitors will display on the BMS and the BMS can over-ride output relays on the monitor it is connected to.

1.1 Applications:

- Vehicle emissions in indoor parking garages
- Municipal maintenance facilities
- Bus terminals
- Automobile dealerships
- Hospital parking for ambulances and visitors
- Volatile organic vapor control from soil contamination
- Refrigerant Gas Leak Monitoring
- CO2 demand control ventilation for meeting rooms
- Warehouse ventilation Control

1.2 Features:

- Stand-alone operation with adjustable alarm relays, indicators and strobe
- BACnet Laboratory (BTL) listed Smart Sensor
- BACnet MS/TP RS485 interface
- CAN network master-slave operation or central control via 6000-B controller.
- Pre-calibrated plug-and-play sensor modules avoid the need to recalibrate when upgrading expired sensors.
- Impact resistant, water resistant enclosure, with top wire entry and drip proof wire guide.
- Binary input for confirmation of external action (fan on or damper open)

1.3 Specifications

- Supply 24 vac 50/60 hz (17-28 vac) 0.21 amps, 5 va
- Relays (1 or 2) SPDT, 5 amp @ 125 vac, non-inductive
  On delay; 0-999 seconds (16 minutes)
  Off delay; 0-999 seconds (16 minutes)
- Operating temperature -20 ºC to 40 ºC (-4 ºF to 104 ºF)
- For indoor use
- Flame resistant Polycarbonate ABS enclosure rated UL94 V0, 5VB, and 5VA
- Standards. Listed to CSA C22.2. no. 205-17.
  Conforms to CSA C22.2 61010-1.
- Analogue 4-20 ma or 2-10v (model 6000-A)

- Pollution degree 2
- Installation catagory II
- Altitude 2000 m
- Humidity max 80% rh. 80% to temperatures up to 31 ºC 88 ºF, decreasing linearity to 50% rh at 40 ºC (104 ºF)

1.4 User Interface:

- Back lit LCD display shows gas concentration, user settings, calibration controls
- Red LED alarm indicators, gas level 1 and 2
- High intensity white LED strobe on level 3
- Audible alarm, 85 db at 1 meter
- 4 pushbutton user keypad
- Password control for settings

2.0 Model Selection Guide

Controller Only

6000-B

- 2 relays
- no analogue outputs

6000-A

- 1 relays
- 2 analogue outputs

Controller with Sensor(s) inside

Example: Monitor for CO + NO_2

6002-14-B

Gas Type (see chart)

Gas type if second sensor installed

6002-14-A

Gas Type (see chart)

Gas type if second sensor installed

Sensor Replacement Module

55-xx

Gas Type (see chart)

		Gas Type	Range
-	Controller only, no sensor	00	
NH_3	Ammonia	04	0-250 ppm
Ar	Argon (O_2 depletion)	23	0-50% O_2
CO_2	Carbon dioxide (air quality)	15-2000	0-2000 ppm
CO_2	Carbon dioxide (compressed)	15-5000	0-5000 ppm
CO	Carbon Monoxide	02	0-100 ppm
CO	Carbon Monoxide	02-250	0-250 ppm
CO nil H_2	Carbon Monoxide nil H_2 effect	02nilH2	0-100 ppm
CL_2	Chlorine	17	0-10 ppm
C_2H_5OH	Ethanol	07	0-50% LEL
	HCFCs	13	
	HFCs	20	
He	Helium (O_2 depletion)	23	0-25% O_2
H_2O in air	Humidity (relative)	25	0-100% RH
H_2	Hydrogen	08	0-50% LEL
H_2S	Hydrogen Sulfide	16	0-50 ppm
CH_4	Methane	05	0-50% LEL
CH_3OH	Methanol	07	0-50% LEL
N_2	Nitrogen (oxygen depletion)	23	0-50% O_2
NO_2	Nitrogen Dioxide	14	0-10 ppm
VOCs	Organic Vapors	01	0-1000 ppm
O_2	Oxygen Leak	22	0-50% O_2
O_2	Oxygen Depletion	23	0-50% O_2
C_3H_8	Propane	06	0-50 % LEL

3.0 Installation

3.1 Monitor Placement

Coverage
Guidelines for placement of diffusion type monitors are based on the reasonable delay for gas to get from the source to the sensor. All monitor sensors combinations are created equal in this regard.

- **For air quality control** of exhaust emissions and accumulations of toxic gases the generally acceptable maximum radius of coverage is 50 feet (15 meters). Approximately 7500 square feet (700 square meters).
- **For leak detection** of combustible gases, ammonia, refrigeration gases the maximum radius is 30 feet (10 meters).

The radius of coverage of any monitor does not extend beyond any obstruction that impedes natural circulation of air. This includes walls, stairs, elevators, shelving with solid fill, tool chests, etc. The sensor must "see" the area of coverage; if not, additional monitors are required.

Mounting Heights
Mounting heights for gas monitors are based on their density, relative to air. There are three groups;

1. **Lighter than air** and will be more concentrated near the ceiling; hydrogen, methane (natural gas), ammonia. Install at 1 to 3 feet from ceiling.
2. **Similar density** to air and will be diluted in air equally at all levels; - carbon monoxide, nitrogen dioxide, hydrogen sulfide, oxygen, carbon dioxide. Install from 3 feet (1 meter) off floor to one half of the ceiling height. For vehicle emissions carbon monoxide sensors combined with nitrogen dioxide sensors are installed at 3 to 5 feet (1 to 2 meters) from the floor when the ceiling height is 7 to 10 feet. If the ceiling height is higher than 10 feet, example- for heavy equipment, the carbon monoxide monitors are installed

at 3 to 5 feet (1 to 1.5 meters) from the floor as per the requirements of the Canada building codes and the nitrogen dioxide monitors should be installed at 50% of the ceiling height and above the vehicle height. If the exhaust pipes of diesel vehicles are below the vehicles, then the nitrogen dioxide monitors should be installed at 3 to 5 feet (1 to 1.5 meters) from the floor. In all cases the monitors must be installed above obstructions blocking circulation of air in front of the monitors; example, maintenance garages in automobile dealerships where tool chests, work tables and storage racks typically line all walls.

3. **Heavier than air** and will concentrate near the floor; - HFCs, HCFCs, propane, chlorine, most organic vapors (consult Opera). Install 1-2 feet (30cm to 50cm) from floor.

For all types of monitors avoid drafts, obstacles, aerosols, silicones. Place sensors in the center of its coverage area as much as possible.

3.2.1 Wiring Model 6000-A

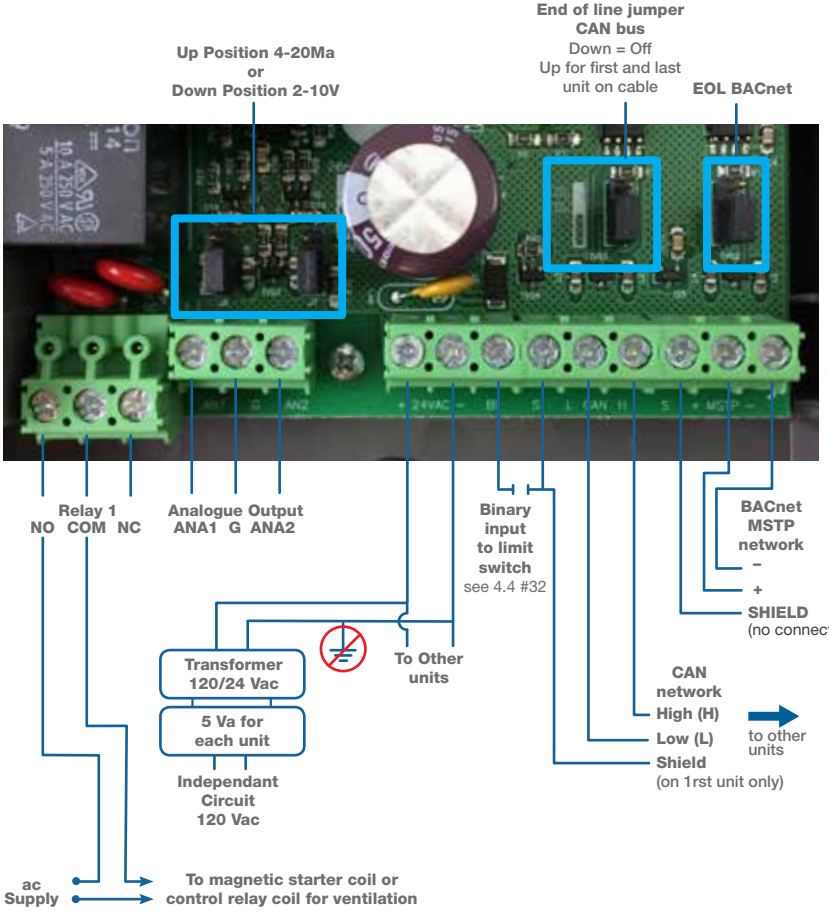

3.2.2 Wiring Model 6000-B

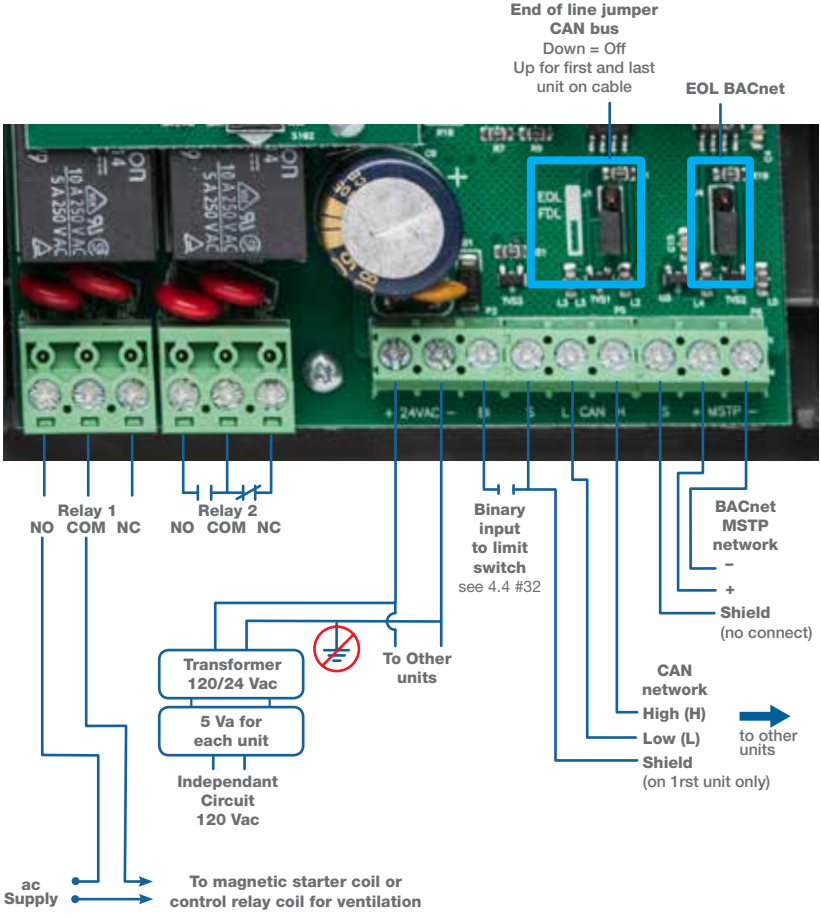

3.3 Installation Check List

Important. All wiring must conform to local building codes, regulations and laws. If the equipment is used in a manner not specified by the manufacturer, the protection provided by the equipment may be impaired.

1. Use ½ inch EMT conduit for all wiring.
2. A switch or circuit breaker must be included in the installation. It must be suitably located and easily reached in a secure location and identified as the disconnect for the “Gas Monotoring System”.
3. Install enclosed 120/24 vac transformer. For the size of transformer allow 5 va for each sensor or controller. Use 18 to 20 AWG two conductor wire. Do not tie the secondary to ground. Connect multiple monitors to one transformer. Ensure that the polarity of the AC connections is the same at each monitor or controller, otherwise communication will not function.
4. Connect relay contacts (usually relay 1) to ventilation system. Use a magnetic starter so that the sensor contacts energize the starter coil and not the fan motor directly.
5. For multiple monitors, inter-connected using the CAN network. Connect a shielded twisted pair cable 22 to 24 AWG from screw “L” and “H” (screw 11 and 12) on one sensor, to the next monitor and continue chain to the last sensor. Maintain the same polarity on each unit. Do not use star, T, or H junctions, only a continuous chain. Make all chain connections at the sensors. Connect shield to “S” on the first sensor or controller only and join shields together at each sensor/controller after the first.
6. Move the end-of-line jumper (the one above terminal 11, 12) to the on position (UP) on the first monitor (or controller) on the chain and the last monitor/controller on the chain. A controller with no sensor module can be located anywhere on the chain. Ensure its EOL jumper is off (down) if it is in the middle. Monitor/controller addresses can be in any location on the chain.
7. Power on the units. They will display the gas type and reading. To verify if monitors are communicating correctly, change setting

no. 56 on one unit. Press →until you reach option 56. Press →to switch from 0 to 1, to turn on the network display. Press →and → simultaneously to save, then press and hold →for a few seconds to return home. The unit will display each monitor connected in order of their address. If the unit does not display the others scrolling by, check the following;

- each unit must have a unique address, setting 39, with no duplicates
- end-of-line jumpers are set on units at ends of cable only
- polarity of the communication cable and the 24 Vac is the same on all units
- verify wire connections for shorts, and loose wires, etc.

8. To further test communication, press and hold the up **button** on a monitor for 5 seconds to start manual mode (5 minutes). This will close the relay 1 on that unit and all of the other units on the network. See section 5 to set up a configuration for multiple zones.

For assistance contact Opera Inc.
(see back cover for contact info)

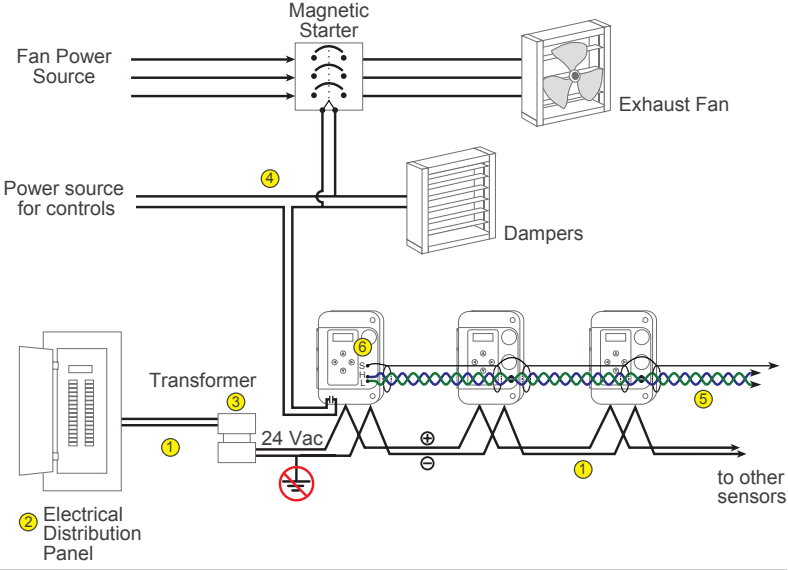

4.0 OPERATION

4.1 Screen Display

The LCD shows the type of gas and the current gas concentration. If two sensor modules are installed, the display will alternate between them.

1 indicates alarm 1 on, per settings 0, 1, 2 or if activated by another sensor on the CAN network via setting 36. This is usually the low gas level alarm.

2 indicates alarm 2 on. Per settings 3, 4, 5 or if activated by another monitor on CAN network per setting 37.

3 indicates alarm 3 on. Per settings 6, 7, 8 or if activated by another monitor on CAN network per setting 38. Alarm 3 activates the sounder and strobe.

M indicates manual override mode on. Useful to start ventilation system without the risk of leaving it on too long in cold weather. From the home screen, press and hold ↑ for 5 seconds to start. Then click again to increase time from 5 to 60 minutes. This activates alarm 1 (or 2, and 3 per setting 69) and sends alarm transmit messages (settings 9-17) to other monitor on the CAN

network. The unit will return to automatic operation after the time runs down. To cancel manual mode press ↓ several times to reduce time left to run. It will take a few seconds to stop. “M” also displays when auto-cycle is on. See setting 73.

T indicates alarm 1 on due to high ambient temperature (setting 51). Useful for summer ventilation.

4.2 Default Settings

User settings are factory pre-loaded with default values to facilitate set up and can be changed at any time. Upgrading firmware will not affect user settings.

Alarm thresholds should be set to suit local regulations. Default values for these are general guidelines only.

4.3 Changing Settings

Press → and ← to move through the settings. If the keypad lock is on then enter the password first. The screen will display the setting number 0, 1, 2, etc. plus the short description (e.g.; AL1 for Alarm 1 and the current setting.)

Press the↑ or ↓ buttons to increase or decrease the setting. To save, press ↑ and ← buttons at the same time. The word “OK” will appear. If you do not see “OK” and the new value it is because the buttons were not pressed simultaneously. Try again.

4.4 List of Settings Sensor A (upper socket) settings

No.	Name	Description	Range	Default
0	AL1	Alarm 1 threshold, activates relay 1	by sensor	
1	A1Del	Alarm 1 Delay on (seconds)	0-999	30
2	A1Off	Alarm 1 Delay off (seconds)	0-999	20
3	AL2	Alarm 2 threshold, activates relay 2	by sensor	
4	AL2Del	Alarm 2 Delay on (seconds)	0-999	30
5	AL2Off	Alarm 2 Delay off (seconds)	0-999	20
6	AL3	Alarm 3 threshold, sounder	by sensor	
7	A3Del	Alarm 3 Delay on (seconds)	0-999	180
8	A3Off	Alarm 3 Delay off (seconds)	0-999	20
9	A1Tx	Alarm 1 transmit message, CAN network	0-255	1
10	A1Tx	Alarm 1 transmit message, CAN network	0-255	
11	A1Tx	Alarm 1 transmit message, CAN network	0-255	
12	A2Tx	Alarm 2 transmit message, CAN network	0-255	2
13	A2Tx	Alarm 2 transmit message, CAN network	0-255	
14	A2Tx	Alarm 2 transmit message, CAN network	0-255	
15	A3Tx	Alarm 3 transmit message, CAN network	0-255	3
16	A3Tx	Alarm 3 transmit message, CAN network	0-255	
17	A3Tx	Alarm 3 transmit message, CAN network	0-255	

4.4 List of Settings Sensor B (lower socket) settings

No.	Name	Description	Range	Default
18	AL1-B	Alarm 1 threshold, activates relay 1	by sensor	
19	A1Del	Alarm 1 Delay on (seconds)	0-999	30
20	A1Off	Alarm 1 Delay off (seconds)	0-999	20
21	AL2-B	Alarm 2 threshold, activates relay 2	by sensor	
22	A2Del	Alarm 2 Delay on (seconds)	0-999	30
23	A2Off	Alarm 2 Delay off (seconds)	0-999	20
24	AL3-B	Alarm 3 threshold, sounder and strobe	by sensor	
25	A3Del	Alarm 3 Delay on (seconds)	0-999	180
26	A3Off	Alarm 3 Delay off (seconds)	0-999	20
27	A1Tx	Alarm 1 transmit message, CAN network	0-255	1
28	A1Tx	Alarm 1 transmit message, CAN network	0-255	
29	A1Tx	Alarm 1 transmit message, CAN network	0-255	
30	A2Tx	Alarm 2 transmit message, CAN network	0-255	2
31	A2Tx	Alarm 2 transmit message, CAN network	0-255	
32	BiTx	Binary input transmit message when limit switch is closed, CAN bus. See 3.2.1	0-255	0
33	A3Tx	Alarm 3 transmit message, CAN network	0-255	3
34	A3Tx	Alarm 3 transmit message, CAN network	0-255	
35	A3Tx	Alarm 3 transmit message, CAN network	0-255	0

4.4 List of Settings Continued
General settings

No.	Name	Description	Range	Default
36	R1Rx	Receive message to activate relay 1, CAN network	0-255	1
37	R2Rx	Receive message to activate relay 2, CAN network	0-255	2
38	R3Rx	Receive message to activate sounder and strobe CAN network	0-255	0
39	Adr	Monitor identification address, CAN network	0-32	0
40	AnZA	Accessing this option forces analogue output A to low for testing with meter only and no external cables attached. Use up and down arrows to adjust lowest setting (2v or 4 ma) and save		
41	AnSA	Accessing this option forces analogue output A to high for testing with meter only and no external cables attached. Use up and down arrows to adjust lowest setting (10v or 20 ma)		
42	AnZB	As option 40 but for output B		
43	AnSB	As option 41 but for output B		
44	Temp	Temperature display enable off/on	0/1	0
45	Aud	Local audio alarm enable on alarm 3	0/1	1
46	BAC	BACnet MSTP mode select 0 = BACnet communication disabled 1 = BACnet communication enabled 2 = BACnet communication enabled and display all sensors on CAN network	0/1/2	0
47	BMA	BACnet MAC address	127	0
48	BBR	BACnet baud rate 0 = 9600 1 = 19200 2 = 38400 3 = 76800	0/1/2/3	3
49	KBL	Keyboard lock, blocks access to options	0/1	0

No.	Name	Description	Range	Default
50	TMod	Temperature modify/calibrate	-9/+9 °C	0
51	ATHi	High temperature alarm limit used for summer ventilation. Alarm 1 is activated when temperature exceeds option. Temp setting 72 deg C/ F will auto convert	0-99 °C 0-210 °F	60 140
52	W/U	Warm up delay disables alarms, seconds	0-255	60
53	BMM	BACnet maximum MAC address when polling for master	0-127	127
54	BDiag	BACnet diagnostic display while accessing this option. In format XXXXYYZZ. Where YY is MAC address (in hex) of the monitor that just passed the token to the current one. ZZ is the monitor to which the token was passed to. Example 0305 would display on monitor with MAC address 4		
55	ATLo	Low temperature alarm limit (alarm 3). 0=off		0C/ 32F
56	Net	Enables display on home screen of all monitor on CAN network. 1=0n	0/1	0
57	Ref-A	To select scale and type of gas for sensor A. **For model 6020:** R507, R23, R134a, R152a, R492a, R404a, R407a, R408a, R410a, R500, R502, R507 **For model 6013:** R22, R21, R141b, R142b, R401a, R402a, R408a, R409a, R502a **For Model 6021:** R134a, R125, R404a, R410a, R407a, R407c, R407f, R448a, R449a, R513a, R22, R123, R507, R1234yf, R1234zf	select from list	R507 R22
58	Ref-B	As setting no. 57 but for sensor B (bottom socket)		
59	FltTx	Fault alarm transit message, CAN network	0-255	0

4.4 List of Settings Continued
General settings

No.	Name	Description	Range	Default
60	ADTxA	Analogue drive transmit message, sensor A (top) CAN network	0-255	0
61	AMinA	Analogue drive. Minimum percent of scale for zero output. Sensor A	0-100	0
62	AMAxA	Analogue drive. Maximum percent of scale for full scale output. Sensor A	0-100	100
63	ADRxA	Receive message code to control local analogue output. Sensor A	0-255	0
64	ADTxB	Analogue drive transmit message, sensor B (bottom) CAN network	0-255	0
65	AMinB	Analogue drive. Minimum percent of scale for zero output. Sensor B	0-255	0
66	AMaxB	Analogue drive. Maximum percent of scale for full scale output. Sensor B	0-100	100
67	ADRxB	Receive message code to control local Analogue output B	0-255	0
68	Baud	Baud rate for CAN network Maximum network wire length is 1500 feet at rate 0 and 3000 feet at rate 1 Use rate 0 with model 5000	0-1	0
69	Man	Manual over-ride from home screen activates alarms 1, 1+2, 1+2+3. See section 4.1	1-3	1
70	BDI	Bacnet device instance Enter part 1 (1000 to 4,194,303) Press right arrow Enter part 2 (0 to 999)	0-4,194, 303	60,000 +BMA
71	Light	1 = backlight always on 0 = on when keyboard activated	0-1	0
72	°C/°F	Display 0 = degrees C, 1 = degrees F Will also convert settings 51 and 55	0-1	0
73	Cycle	Automatic cycle timer Alarm 1 00C = total Cycle time in minutes Press right arrow 00R = Run time in minutes	0-255	00/00
74	Age	Sensor module A age in days Press enter to display Sensor B		0

No.	Name	Description	Range	Default
75	VSD A	Variable Speed Drive logic Analogue output A Combines analogue outputs over CAN bus. See options 60-66 0= highest reading wins 1= sensor readings are averaged 2= auto ramping increases analogue output by one-minute intervals on alarm 1 and decreases when below alarm.	0/1/2	0

4.5 Sequence of Operation

1. Monitors are pre-loaded with options for normal operation and can be changed by the user at any time via the key pad.
2. On power-up the display will show the software revision number and the Warm-Up Timer will count down (setting 52, default 1 minute). Relays are inactive during this time. Press any button to cancel the warm-up period.
3. The display will show the gas type and the current gas concentration. For dual-monitors the display will alternate between the two sensor modules showing the gas type and concentration of each. If the network display option is turned on (option 56) the display will show each monitor that is connected via the CAN network, its address, gas type and concentration. Monitor will display for 3 seconds and then cycle to the next, lowest address to the highest and then start again.
4. If the gas level rises above the Level One Set Point then the Delay-On Timer will start. The time setting range is from 1 to 999 seconds. If the gas level drops below level one the timer will reset and start over the next time it goes over.
5. If the gas level stays above the Alarm 1 Level for the set time the relay 1 on-board will energise, and remain energised as long as the gas remains above the alarm setting. The bottom left corner of the display will indicate a 1 and the alarm 1 LED will light up. In

addition, the Alarm 1 Transmit Message (default is 1) will be sent to all monitors and controllers via the CAN network.

6. All monitors or controllers on the CAN network with a Relay 1 Receive Message (setting 36) = 1 will energise their on-board relay 1, and display a 1 in the bottom left hand corner of their display.
7. When the current gas concentration drops below the Alarm 1 set point, the Delay-Off time will start. The timer will clear if the gas rises above the alarm setting.
8. When the Delay-Off Timer times out the relay 1 will de-energise, the Alarm 1 LED will turn off and the Relay 1 Transmit message will stop being sent, thereby de-energising relays on other units.
9. If the temperature exceeds the Hi Temperature Alarm, setting 51, relay 1 will activate, the Alarm 1 LED will turn on and the Alarm 1 Transmit message will be sent via the CAN network to other sensors and controllers. When temperature drops, the alarm 1 will be turned off and the Alarm 1 Transmit message will stop being sent.
10. If the gas level rises to the Alarm Level 2 setting, then the Level 2 Delay-On Timer will begin, and after timing-out the on-board relay 2 will activate (for models 60xx-B only) the Alarm 2 LED will turn on, the Relay 2 Transmit message (default = 2) will be set out on the CAN network activating remote units with that same Relay 2 Receive message (option 37). Note that all 3 alarms operate independently and can be higher or lower that the others.
11. When the current gas concentration drops below the Alarm 2 setting for longer than the Alarm 2 Off-Delay Setting the relay 2 will turn off, the Relay 2 LED will turn off, and the Relay 2 Transmit message will stop being sent on the CAN network.
12. When the gas concentration rises above the Alarm Level 3 setting for more than the Alarm 3 Delay-On timer the audible alarm will sound, the LED strobe flasher will start (if enabled; setting 45), a 3 will appear in the bottom left corner of the display, and the Alarm 3 Transmit message (default 3) will be sent to other sensors or controllers. They can be silenced by pressing any button.

13. When the gas concentration drops below the Alarm 3 set point for longer than the Alarm 3 Delay-Off setting then the audible alarm and strobe flasher will stop and the Alarm 3 Transmit message will stop being sent on the CAN network.
14. On a sensor fault condition, the units will transmit the Fault Transmit Message, option 59, to other monitors or controllers.
15. Manual Over-ride mode is available to test relay functions and to activate ventilation. From the home screen press and hold the up arrow for 5 seconds. Press the up arrow to increase the timer by 5 minutes per click up the 60 minutes. The screen will display MAN 5 and timer will energise relay 1 and send the Alarm 1 Transmit Message on the CAN network. After the time runs down the unit will return to automatic operation. To cancel, press the down arrow several times to reduce the timer to zero and return to normal operation. To activate Alarm Level 2 or 3 as well with this procedure, set option 69 to 2 or 3.

This sample sequence of operation shows the operation of a basic network for one zone. See the Operation Manual section 4 Operation to see how to change settings and section 5 Configurations for setting up multiple zones.

5.0 Network Configuration

5.1 Using CAN Network with a Central Controller

A model 6000 controller serves as the central connection point for the ventilation system. Model 60XX gas monitors transmit alarm commands to the central controller.

A controller will display up to 32 monitors on the network. It also displays their address, gas type, gas concentration, and alarm status for each. Two relays on board can be configured for different levels of gas or to operate different ventilation systems, zones or groups. If more than two relays are needed add a model 6100 Relay Expansion Unit which has four additional relays.

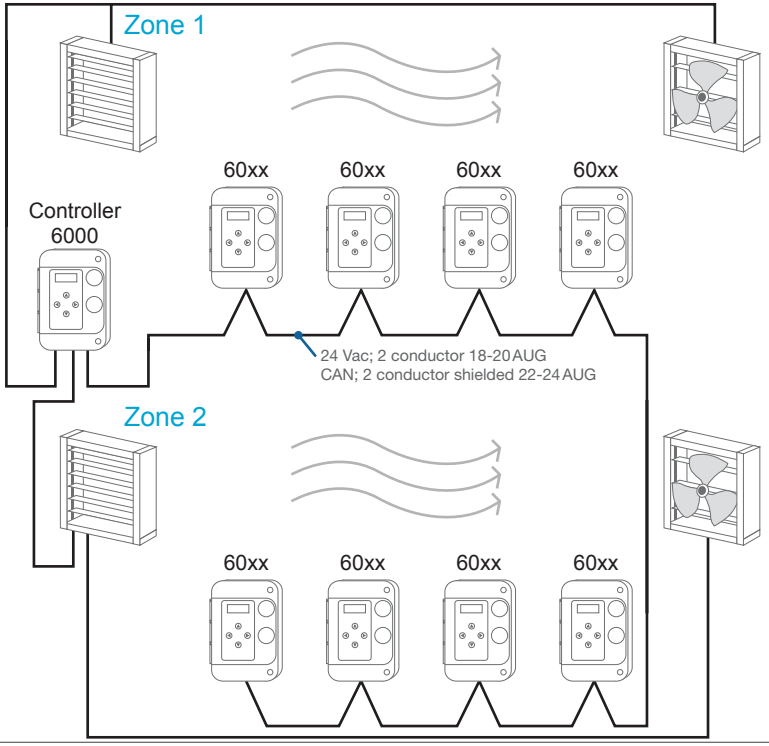

5.2 Using CAN Network with No Central Controller (master/slave operation)

One of the 60XX series monitors can be used as the controller. It can activate the ventilation for all the sensors, or a group. The use of a dedicated controller is optional; - to add a display in some specific location, such as before entering a mechanical room or to interface with several fan starters located in one place. Starters and air dampers are connected to the sensor closest to it in each zone.

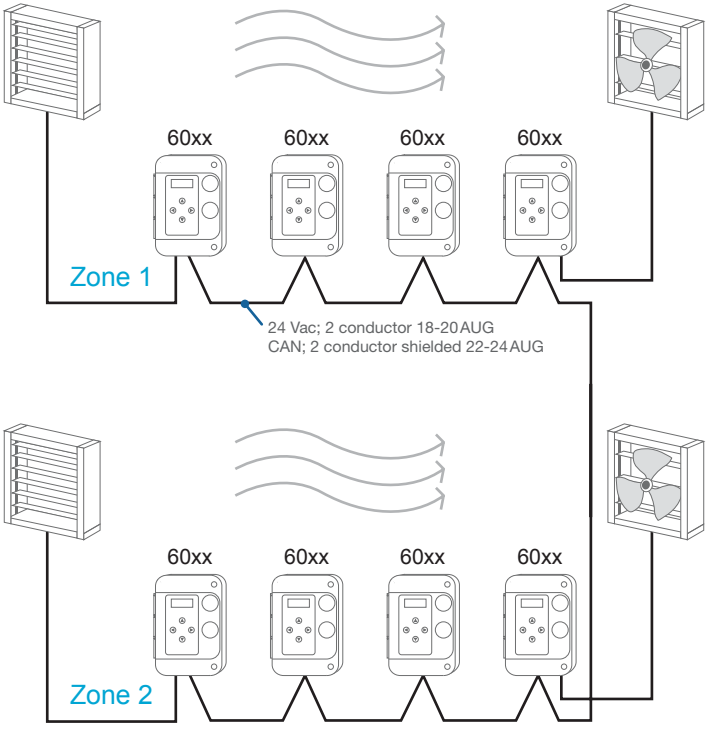

5.3 Default Configuration

Monitors are shipped pre-loaded with default settings which can be changed in the field to suit the desired sequence with simple keypad input. When a monitor goes into alarm level 1, 2 or 3 it activates its relays and transmits a message to other sensors to activate their relays also. Alarm 3 message are transmitted by default, but the receive option 38 defaults to 0 so the audible alarms and strobe operate locally and not everywhere. The ventilation system can be connected to any of the relays (usually level 1 relay). The default configuration for one ventilation zone. Default alarm settings are for general guidance and testing and should be set to suit local regulations.

5.4 Creating Zones or Groups

To control multiple zones on the same network, set the transmit message on each sensor to different messages for different zones. The default transmit messages are 1, 2, 3 for alarm levels 1, 2, 3 for zone 1.

For zone 2 monitors set transmit messages to 4, 5, 6
For zone 3 monitors set messages to 7, 8, 9, and so on

5.5 Addresses

Set each monitor and controller to a different address (setting 39). 1, 2, 3, 4 etc. It is important to have no duplicates on the same network cable.

5.6 Output Relays

Relay number 1 and 2 will activate if the gas on that monitor goes into alarm level 1, or 2. It will also activate when it sees it's receive code (setting 36, 37) on the network, sent by other sensors. If more than 2 relays are needed, add a model 6100 Relay Expansion Unit which has 4 additional relays. It can be installed anywhere on the CAN network.

A model 6000 basic controller has no sensors on board so the relays will only activate if it sees it's receive codes on the network. The 6000 controller could control two zones via its two relays. When no controller is used, the master monitor(s) needs to be a member of the group it is controlling.

6.0 Maintenance Guide

All monitors are shipped from the factory pre-calibrated. To maintain accuracy and conformity with standards it is essential that they be calibrated by a qualified technician once or twice per year, depending on the application.

6.1 Calibration Procedure

Use certified precision gas mixtures to adjust the sensitivity of the sensor due to normal aging and guarantee that the designed alarm set points are respected. So-called “automatic calibration” or “self-test” will not provide this level of security. Only use gas concentrations within the specified range of the sensor.

6.2 Calibration Procedure for Electro-chemical and Catalytic sensors (CO, NO2, CH4, NH3, CL2)

1. Use certified bottled calibration gas mixtures only. Ensure that monitors are powered on for a minimum of the break-in period for the sensor. For electro-chemical type sensors, this is only a few minutes.
2. Press the right arrow to enter settings
3. Press the ↑ and → at the same time to enter calibration mode. SAZ (sensor A zero) will display and show the current gas reading on the top line
4. Inject bottled zero gas into first sensor. Use a flow rate of 0.1 LPM to 0.5 LPM. The gas fitting to sensor should have a small outlet hole. If not, the pressure will increase and distort the reading (high).
5. Adjust gas reading to zero with the ↑ and ↓ buttons
6. Press ↑ and ← at the same time to save.
7. Press → The display will show SAS (sensor A span) and the current gas reading

8. Inject bottled span gas into first sensor and wait until the gas reading stops going up. The span gas used must be within the range of sensor's scale.
9. Adjust the reading up or down to match the concentration in the bottle
10. Press ↑ and ← at the same time to save
11. If second sensor installed press → and repeat steps 4 to 10 for sensor B
12. Press left arrow several times to return to settings and home.

Calibration Procedure for Refrigerant (type 13, 20) and VOC (type 01) sensors

1. Use certified bottled calibration gas mixed with air only, not nitrogen. Ensure that monitors are powered on for a minimum of the break-in period for the sensor. For these types sensors, this is two days.
2. Inject bottled span gas
3. Adjust the blue potentiometer on the module to set the sensor reading displayed to that of the bottle mix. Do not change the factory calibration constants in calibration mode as above.
4. Remove span gas mix and supply air. Sensor will return to zero.
5. If sensor does not return to zero, it needs replacement

For assistance contact Opera Inc.
(see back cover for contact info)

7.0 BACnet Network Configuration

For instructions on changing settings see section 4.3

Setting 46	Bacnet Mode select 0 = communication disabled 1 = communication enabled 2 = communication enabled and display all monitors on CAN network	0, 1, 2	Default 0
Setting 47	BMA MAC address	0-127	0
Setting 48	Baud rate	0 = 9600 1 = 19200 2 = 38400 3 = 76800	3
Setting 53	Max Master	0-127	127
Setting 54	Diagnostic tool to test MSTP communication. Format XXXXYYZZ where YY= ID of device that passed token to current sensor and ZZ = ID of device that received token.		
Setting 70	Device ID	4,194,303	60,000+BMA

Ventilation Controlled by BACnet Building Automation

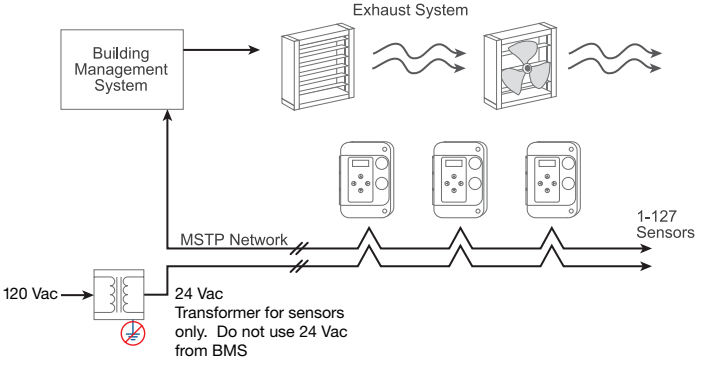

Object Table

Type and Instance	Object Name	Object Property	Parameter
AV0	gas reading 1	Present value (R)	Gas reading local sensor A
AV1	gas reading 2	Present value (R)	Gas reading local sensor B
AV2	Ambient temperature	Present value (R)	Temperature in celsius
BI 0	Input 1	Present value (R)	Auxiliary input state 0/1
BO 0	Relay 1	Present value (R/W)	Relay 1 status on 0/1
BO 1	Relay 2 or alarm 2	Present value (R/W)	Relay 2 or alarm 2 status 0/1
BO 2	Alarm 3	Present value (R/W)	Alarm 3 Indicator status 0/1
AV XYY	Gas reading XYY	Present value (R)	Gas reading remote sensors if setting 46=2

X = sensor 1 (top) or 2 (bottom),
YY = CAN Address
Analogue value for each gas reading will display description of gas type and scale

Ventilation Controlled directly by Gas Sensors

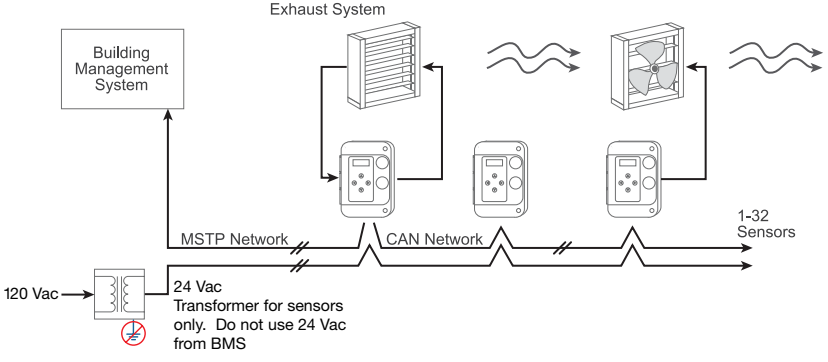

697 Meloche St
Dorval, Quebec
Canada H9P2S4

514-556-3013
info@detecteursopera.com
www.operadetectors.com

PRAHER – CHECK VALVES

Operating Instruction

Wafer check valve K4 PVC-U, PP, PP+GF, PVDF

1. Installation instruction

a) Flange connection
   1. Slide flange on pipe
   2. Mount flange socket onto pipe (weld)
   3. Insert wafer check valve with flanges into pipeline (**caution:** an arrow on valve body shows the flow direction)
   4. Connect flanges with proper bolts (make sure that flange gasket sits in proper location)

Note:

Furthermore wafer check valve and pipes should be aligning.
Only approved welder are allowed to perform plastic welding in accordance to DVS guidelines 2207 Part 11 for PP, DVS 2207 Part 15 for PVDF.Pipe installations have to performed in accordance with DVS 2210 Part 1

2. Operation

The valves are factory tested for leakage.
A pressure test due to Pressure Equipment Directive has to be performed before start up and documented.
The test pressure will be calculated with the lowest nominal pressure by pressure testing device.
After the pressure check of the whole piping-system, you have to redraw all screws in unpressurized system.

3. Current use

The rated published pressure and temperature limits have to be obeyed – for details visit our website (www.praherplastics.com).
Pressure and temperature relate to media which PP and PVDF are inert. In case of uncertainty please look it up in a chemical resistance list.
The wafer check valve is not suitable for media with solids. Additionally the Wafer Check valve is neither tested nor approved for usage in gas systems.

4. Service

- Use only Silicone- or Polyglycol based lubricants for EPDM gaskets.
- Change gaskets in case of leakages

5. Dismantling instruction

Caution: Do not dismantle pressurized system.

b) Flange Connection
   1. Drain pipeline
   2. Loosen flange bolts
   3. Take valve out of system and do not misplace gaskets

6. Caution

- Do not loosen screws in a pressurized system
- Drain systems before dismantling

Praher Plastics Austria GmbH
Poneggenstraße 5 . 4311 Schwertberg . Austria . T +43 (0)7262 / 61178-0 . F +43 (0)7262 / 61203
office@praherplastics.com . www.praherplastics.com . Geschäftsführer: Ing. Winfried Praher, Dr. Rainer Pühringer
Handelsregister Linz FN 318033 x . DVR 058131 . UID-Nr. ATU64509623 . EORI-Nr. ATEOS1000006881

PRATT – KNIFE GATE VALVES

PRATT®

LVC Figure 93
Stainless Steel Metal Seated Knife Gate Valve

675 Mitchell Avenue
Woodland, WA 98674
Phone: 360-225-1230
888-256-5779
Fax: 360-225-1235
www.henrypratt.com

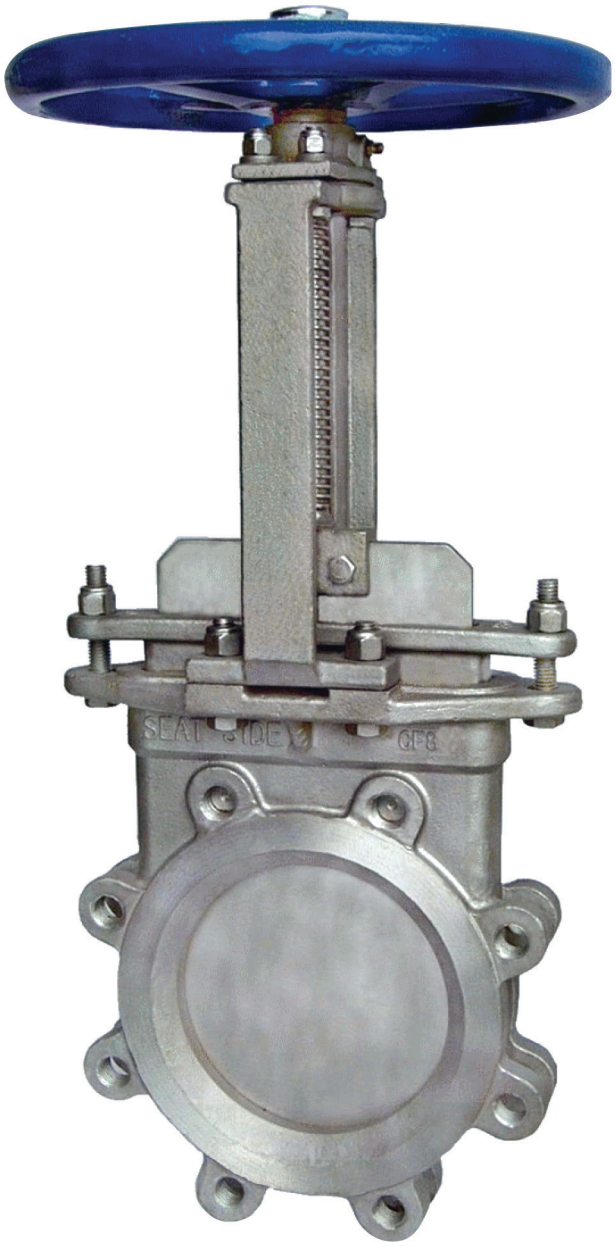

Features

- Cast stainless steel body, packing gland, and yoke.
- Heavy duty body designed to resist deflection from line loads and internal pressure.
- Body cavity, seat configuration and beveled gate design provides shut-off capability in thick media such as pulp stock and slurries, or solid media such as pellets and powders.
- Heavy duty cast stainless steel yoke will not bend or twist under extreme loads.
- Easy conversion from handwheel operator to hydraulic or pneumatic cylinder, bevel gear, chainwheel, electric motor, or fail safe spring cylinder operator using existing cast yoke.
- Enclosed bronze stem bushing provides reduced operating torque and protection of the stem bushing in harsh environments.
- Hard faced seat available to prevent galling in high cycle and/or high end pressure or abrasive applications.
- Factory installed V-Port inserts available for metering or throttling service.
- O-Ring resilient seat available.
- Precision machined stainless steel gate provides superior seating capability.
- Gate designed to withstand full 150 PSI rated pressure as required by MSS-SP-81.
- Stainless steel stem resists corrosion.
- Various wiper materials available in packing to provide gate support and stabilize packing seal.
- Standard TFE lubricated synthetic packing (TLSP) rated to 500° F and pH range of 3-11.
- Full port ID.
- MSS SP-81 Stainless Steel, Bonnetless, Flanged Knife Gate Valves.
- AWWA C520-10 Knife Gate Valves, 2in.—96in.

LVC Figure 93
Stainless Steel Metal Seated Knife Gate Valve

Materials of Construction

Model	93
1 Gate	SS
2 Body	SS
3 Seat	SS
4 Bolts	SS
5 Packing	TLSP*
6 Gland	SS
7 Stem	SS
8 Yoke	SS
9 Stem Nut	Bronze
10 Handwheel	DI

*TLSP = TFE Lubricated Synthetic Packing.

Stocked in 304 and 316 SS. 317 SS Available.

Normally supplied with handwheel for manual operation, but can be modified for chainwheel, bevel gear, fail safe spring cylinder, electric motor, hydraulic or pneumatic cylinder operator.

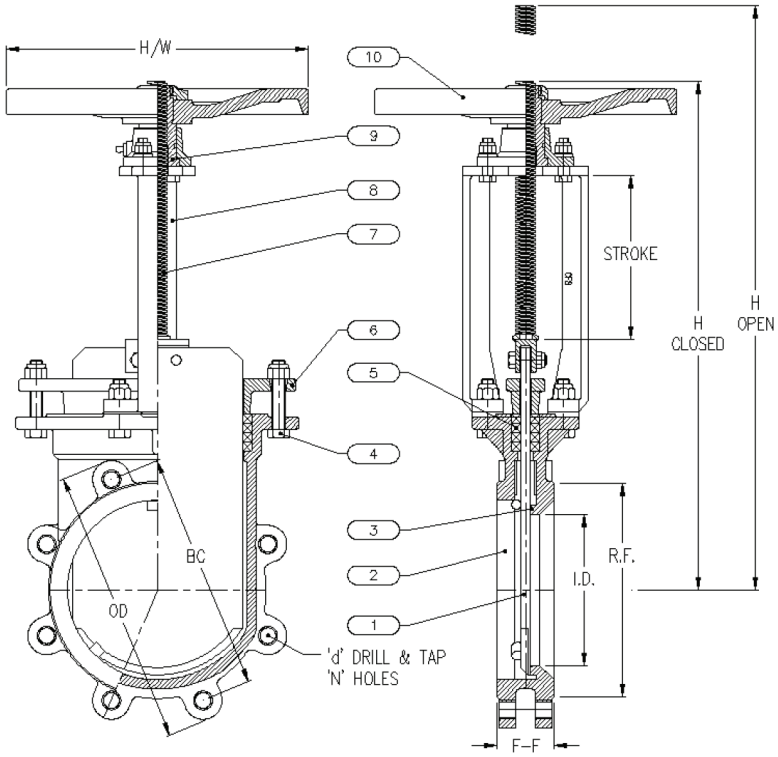

Dimensions (Inches) and Weights

	Size	2	3	4	6	8	10	12	14	16	18	20	24
Face-to-Face	F-F	1-7/8	2	2	2-1/4	2-3/4	2-3/4	3	3	3-1/2	3-1/2	4-1/2	4-1/2
Flange OD	OD	6	7-1/2	9	11	13-1/2	16	19	21	23-1/2	25	27-1/2	32
Bolt Circle	BC	4-3/4	6	7-1/2	9-1/2	11-3/4	14-1/4	17	18-3/4	21-1/4	22-3/4	25	29-1/2
Flanged Raised Face	RF	3-5/8	5	6-3/16	8-1/2	10-5/8	12-3/4	15	16-1/4	18-1/2	21	23	27-1/4
Inside Diameter	ID	2	3	4	6	8	10	12	13-1/4	15-1/4	17-1/4	19-1/4	23-1/4
No. of Bolt Holes	N	4	4	8	8	8	12	12	12	16	16	20	20
Hole D&T Size	D	5/8"-11	5/8"-11	5/8"-11	3/4"-10	3/4"-10	7/8"-9	7/8"-9	1"-8	1"-8	1-1/8"-7	1-1/8"-7	1-1/4"-7
C/L to Top-Closed	H-CLS	14-5/8	15-1/16	16-11/16	20-3/16	23-7/16	27-3/4	31-9/16	37-3/4	43-1/8	46-3/8	50-1/8	55-11/16
C/L to Top-Open	H-OPN	17-1/8	18-9/16	21-3/16	26-11/16	31-15/16	38-1/4	44-1/16	51-3/4	58-7/8	64-3/8	69-3/4	79-7/8
Handwheel Dia.	H/W	8	8	8	12	12	16	16	20	20	20	20	20
Weight - lbs	WT	24	28	36	54	76	124	174	234	330	376	620	804
Stroke	S	2-1/2	3-1/2	4-1/2	6-1/2	8-1/2	10-1/2	12-1/2	13-7/8	16	18	20-1/8	24-3/16

The trademarks, logos and service marks displayed in this document herein are the property of Henry Pratt Company, LLC, its affiliates or other third parties. Products above marked with a section symbol (§) are subject to patents or patent applications. For details, visit www.mwppat.com.

Copyright © 2016 Henry Pratt Company, LLC. All Rights Reserved.

Form 13249 9/2016

Mueller Co.
Reliable Connections

SHARPE – BALL VALVES

SHARPE® VALVES
A Division of Smith-Cooper International, LLC

FULL PORT BALL VALVE – MODEL 50M76
INSTALLATION, OPERATION, AND MAINTENANCE INSTRUCTIONS

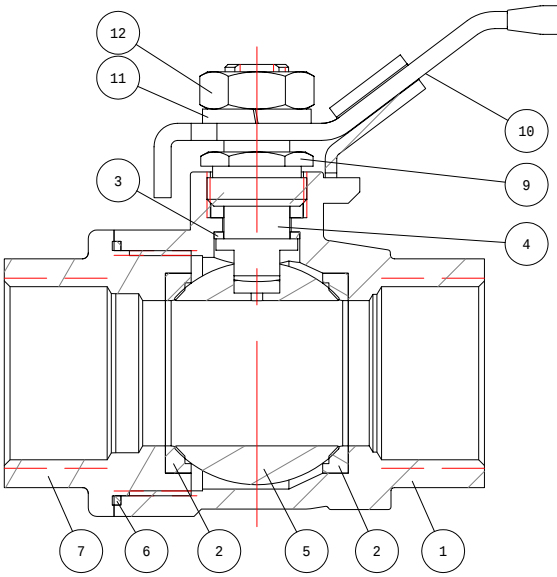

ITEM	PART NAME
1	BODY
2	SEAT
3	STEM THRUST SEAL
4	STEM
5	BALL
6	BODY SEAL
7	CAP
8	STEM PACKING
9	GLAND
10	HANDLE
11	SPRING WASHER
12	HANDLE NUT

INSTALLATION:

These valves may be installed in the pipeline in any orientation or position, using good piping practice. For threaded end valves, use a suitable joint compound or TFE tape on pipe threads for ease of fit-up.

OPERATION:

These are quarter-turn (90° rotation) ball valves, and are normal fitted with a latching lever handle for manual operation. The handles also contain travel stop tabs at the open and closed positions. To open the valve, lift the latch/lock slider up, and turn the handle counterclockwise. To close the valve, lift the latch/lock and turn the handle clockwise.

MAINTENANCE:

----WARNING----
Do not attempt to perform maintenance on valves in pressurized lines.

Stem Seal Adjustment:

If leakage is evident from the stem packing area, tighten the gland nut 1/8 turn. If the leakage persists, repeat tightening. When leakage cannot be corrected by tightening the stem nut, replacement of the valve will be necessary.

SHARPE® VALVES
A Division of Smith-Cooper International, LLC
1260 Garnet Drive, Northlake, Illinois 60164-1028 Phone (877) 774-2773 Fax: (708) 562-0890 www.sharpevalves.com

WIKA – PRESSURE GAUGES

Installation and Operating Instructions
for Mechanical Pressure Gauges

Technical Information

Pressure range selection
To insure proper operation and long service life, the proper pressure range should be selected. For applications with constant, steady pressure, the measured pressure should be no more than 75% of the full scale range of the gauge. For applications with fluctuating pressure, the measured pressure should be no more than two-thirds of the full scale range of the gauge.

In general, it is best to choose a range that is roughly 2X the average measured pressure. This gives good over pressure protection and the highest accuracy.

Installation
The pressure gauge should be installed where exposure to heat and vibration are minimal and where the dial can be easily read. It is also important to install the gauge in a location with undisturbed and continuous flow of the pressure medium.

It is recommended that an isolating device, such as a needle valve or gauge cock, be installed between the process and the pressure gauges. This allows the gauge to be taken out of service without interruption of the process.

Connections with tapered threads, such as NPT, should be sealed by using PTFE tape (or an equivalent sealing compound) on the thread. Metric threads such as G1/4A or 1/4BSP should be sealed by using the appropriate sealing washer.

The gauge should be tightened and loosened using the wrench flats on the gauge socket. Never grasp the case to thread the gauge into the pressure system fitting. Doing so may cause irreparable damage to the gauge.

For pressure gauges with flanged connections, care must be taken not to accidentally loosen the bolts that hold the upper and lower housings together.

A pressure gauge should never be removed when it is pressurized. Make sure the pressure system has been fully vented prior to removing a gauge.

Residues from the pressure medium may remain inside the pressure gauge after it has been removed from service. If these residues are hazardous or toxic, take the necessary precautions when handling and storing used gauges.

Isolating devices
The isolating device may be either a pressure gauge cock or a needle valve, depending on operating conditions and requirements.

Pressure gauge cocks
Pressure gauge cocks have three handle positions:

OFF	The pressure medium is blocked and the pressure gauge system is open to the atmosphere.
ON	The pressure gauge is open to the pressure medium.
VENT	The pressure gauge is isolated but the pressure system is vented and the medium can escape into the atmosphere.

Pressure gauge cocks should be installed so that when vented, the pressure medium is directed away from the operator.

Needle valves
Needle valves also isolate the pressure gauge from the pressure medium, but they usually do not have any venting capabilities. Needle valves do have the advantage of restricting the flow of the pressure into the gauge which helps reduce damage by pressure spikes.

Mounting options
If the pressure system or tee-extension cannot support the weight of the instrument, then surface or wall mounting brackets or mounting flanges (front flange or rear flange) should be used.

Vibration protection
If the pressure gauge is exposed to vibration or pulsating pressure or both, then a liquid filled pressure gauge is recommended. The liquid dampens the effects of vibration making the pointer easier to read.

Temperature limits
The pressure gauge should not be used outside of its rated temperature limits as noted on the Data Sheet specific to that gauge. At temperatures above or below these limits, the gauge accuracy will be significantly reduced and the possibility of gauge failure may exist.

Overpressure limits
WIKA gauges are generally designed to withstand up to a 130% overpressure without damage to the pressure system. For applications with overpressure spikes, a snubber or restrictor should be used. Snubbers and restrictors reduce the inlet size of the pressure gauge which causes the pressure to increase or decrease more slowly into the gauge. For applications with periods of constant overpressure, an overpressure protector should be used. The overpressure protector isolates the gauge when the pressure reaches a preset pressure value.

Tee extensions

Tee extensions should have a diameter of at least 0.24 in. (6mm) to avoid clogging from solids in the pressure medium. WIKA recommends that long, horizontal tee extensions be sloped to about 1:15.

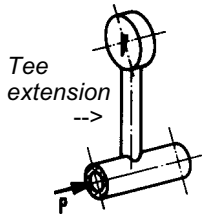

With a gaseous pressure medium, the extension should having a drain plug at its lowest point, while a line with a liquid medium should have an air bleeding valve at its highest point. A filter or separator should be used when the pressure medium contains suspended matter.

If a static head of liquid is acting on the gauge, then this causes a zero offset which affects the reading of the gauge.

The corresponding indication will be lower by the value of Δp if the gauge is mounted above, but higher by the value of Δp if the gauge is mounted below the pressure tapping point.

Pressure gauges in service

Always open isolating devices slowly. Opening them too fast may generate sudden pressure surges that could damage the gauge.

Calibration can be confirmed in larger diameter gauges ($\geq$ 4") by checking the position of the zero point. To do so, close the isolating device and vent the gauge to zero pressure. The pointer must over the zero box ✚. Unless the gauge temperature is significantly higher or lower than 68°F (20°C), a pointer not returning to zero may indicate that the gauge has been seriously damaged.

Storage

The pressure gauge should remain in its original packing until installation.

Storage temperature should not exceed -4°F (-20°C) or 140°F (60°C) unless specified otherwise. Consult the data sheet pertaining to the pressure gauge model.

Pressure gauges removed from service should be protected from dust and humidity, preferably by using the original packing material. Residue from the pressure medium may remain in the gauge and is susceptible to temperature influences (i.e. freezing). This should be considered when storing the removed pressure gauge.

Pressure gauge safety

Pressure media such as:

- Oxygen
- Acetylene
- Flammable gases or liquids
- Toxic gases or liquids
- Steam
- Ammonia and other refrigerants

as well as portable or stationary pressure systems like:

- Air compressors
- Welding equipment
- Pressure vessels and boilers
- Life support equipment

may require pressure gauges that have been tested and/or certified to national standards and/or local safety codes. Your local WIKA representative will be able to assist you in selecting the proper gauge model.

Standards for Pressure Gauges

U.S. & Canadian Standards are set forth by The American Society of Mechanical Engineers, which publishes pressure gauge specifications in their document ASME B40.1. This document specifies standard pressure gauge types, sizes, materials, ranges, and accuracies. Copies of this standard can be purchased directly from ASME:

ASME
22 Law Drive, Box 2900
Fairfield, NJ 07007-2900
1-800-THE-ASME or (973) 882-1167
Fax: (973) 882-1717
E-mail: infocentral@asme.org

European Standards are developed and published by the European Committee for Standardization (CEN) and replace the individual standards formerly used in each European country (such as DIN standards in Germany). Copies of these standards can be obtained through:

Comité Européen de Normalisation (CEN)
Central Secretariat
rue de Stassart 36
B-1050 Brussels
Belgium

Pressure gauge accessories

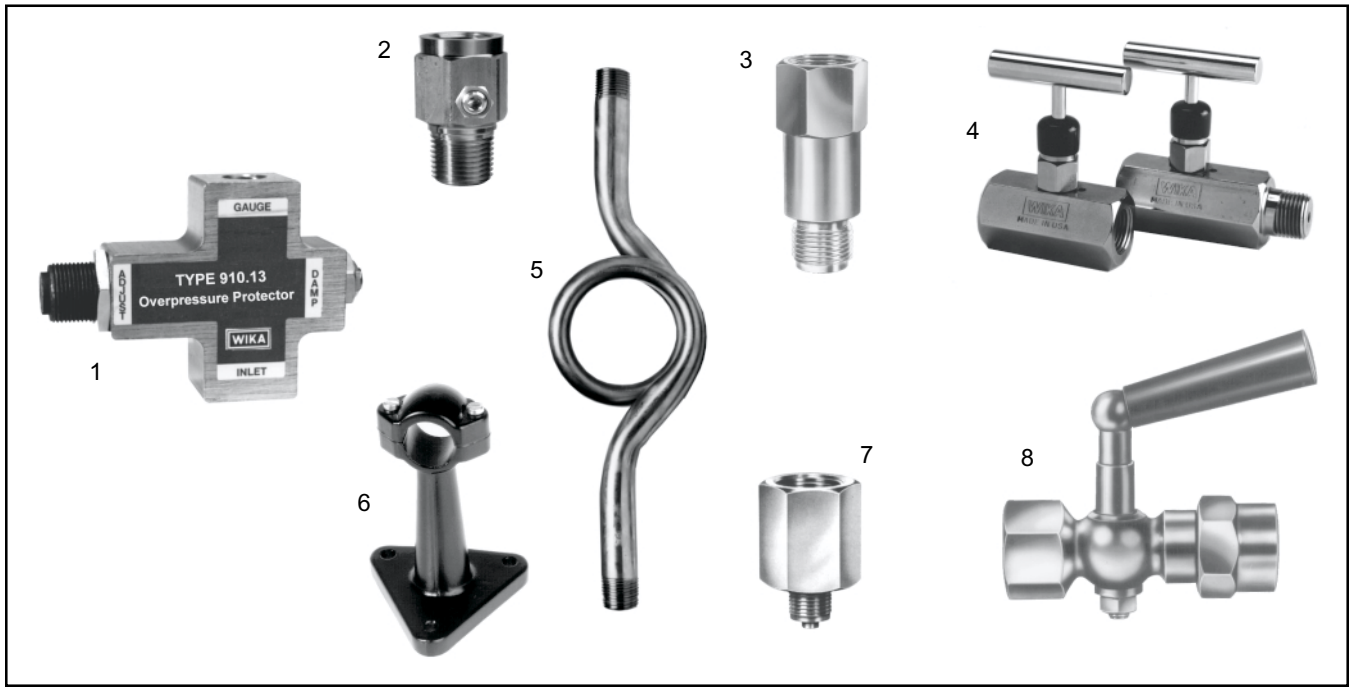

1. Overpressure protector
2. Throttling (adjustable) snubber
3. Adaptor for wall mounting bracket
4. Needle valves
5. Coil siphon
6. Wall mounting bracket
7. Thread adaptor (1/4" NPT -> G1/4A)
8. Pressure gauge cock

Recommended Pressure Gauge Orientation

The table below shows the recommended position for pressure gauges in typical applications.

	Liquid media			Gaseous media		
Contents of tee extension	liquid	liquid with vapor	vapor only	Gas only	Wet gas	Liquid gas condensate
Typically	Condensate	Boiling liquid	LPG	Dry air	Moist air	Steam
Pressure instrument above the process			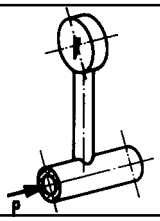	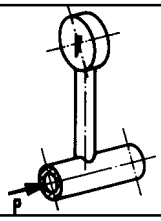	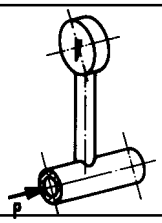	
Pressure instrument below the process	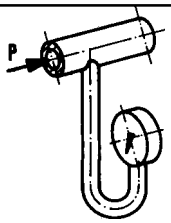	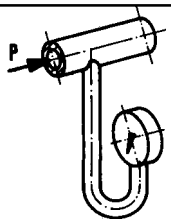				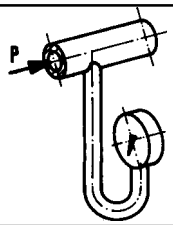

THE MEASURE OF

Total Performance™

Ordering Information:
State computer part number (if available) / model number / size / range / connection size and location / options required.

Specifications given in this price list represent the state of engineering at the time of printing.
Modifications may take place and the specified materials may change without prior notice

WIKA Instrument Corporation
1000 Wiegand Boulevard
Lawrenceville, Georgia 30043-5868
Tel: 770-513-8200 Fax: 770-338-5118
http://www.wika.com e-mail: info@wika.com

02/98

Appendix E: Newterra Volute dewatering OMM

newterra ltd.
1291 California Avenue, Brockville, ON K6V 5W3
(800) 420-4056 / www.newterra.com

newterra Wastewater Volute

OPERATION AND MAINTENANCE MANUAL

System:	**Agnico Eagle Volute**
Location:	**Meliadine Mine, Kivalliq District of Nunavut**
Client:	**Agnico Eagle Mines Limited**
Project:	**1905884**
Rev.:	**1**
Date:	**September 2019**

newterra ltd.
1291 California Avenue, Brockville, ON K6V 5W3
(800) 420-4056 / www.newterra.com

Revision History

Revision	Date	Remarks
1.0	2019	Initail Issue

© 2019 by newterra, ltd.
All rights reserved. No part of this document may be reproduced or transmitted in any form or by any means, electronic, mechanical, photocopying, recording, or otherwise, without prior written permission of newterra ltd.

newterra ltd.
1291 California Avenue, Brockville, ON K6V 5W3
(800) 420-4056 / www.newterra.com

TABLE OF CONTENTS

1.0 INTRODUCTION 6

2.0 SAFETY 8
2.1 Introduction 8
2.2 Personal Protective Equipment (PPE) 9
2.2.1 Head protection 9
2.2.2 Eye and Face Protection 9
2.2.3 Foot Protection 10
2.2.4 Hand Protection 10
2.2.5 Body Protection 10
2.2.6 Hearing Protection 11
2.2.7 Respiratory Protection 11
2.3 Bacterial Safety 12
2.4 Chemical Safety 12
2.5 Locking out Equipment 13
2.6 Entering Confined Spaces 13
2.7 Fire Safety 14
2.8 Responsibility for Safety 15
2.8.1 Management 15
2.8.2 Worker 15
2.8.3 Plant Safety – Simple Rules to Follow 16
2.9 Hazard Warning Signs/Symbols 17
2.10 First Aid 19
2.10.1 CPR Poster 20

3.0 WASTEWATER TREATMENT PLANT DESIGN BASIS 22
3.1 General 22
3.2 Design Parameters 23
3.3 Waste Activated Sludge Production 23
3.4 Estimated Chemical Consumption 23

4.0 PLANT INSTALLATION, INSPECTION, AND TESTING 24
4.1 System Overview 24
4.2 Site Conditions Requirements 25
4.3 Inspection upon Delivery 25
4.4 Plant Initial Set up 26
4.4.1 Installation Checklist 26
4.4.1.1 Customer's Scope of Supply 26
4.4.1.2 Civil Checklist 27
4.4.1.2 Electrical Checklist 27
4.4.1.3 Mechanical Checklist 27
4.4.2 System Electrical Specifications 28
4.5 Plant Initial Testing 28
4.5.1 Dry Test 29
4.5.2 Hydraulic Test 29

5.0 OPERATION OF NEWTERRA SLUDGE DEWATERING SYSTEM 30
5.1 Control System – Main SCADA Control, PLCs and HMIs 30
5.1.1 HMI Control Screen 31

© 2019 by newterra, ltd.
All rights reserved. No part of this document may be reproduced or transmitted in any form or by any means, electronic, mechanical, photocopying, recording, or otherwise, without prior written permission of newterra ltd.

newterra ltd.
1291 California Avenue, Brockville, ON K6V 5W3
(800) 420-4056 / www.newterra.com

5.1.2 HOA (Hand/Off/Auto) 32
5.1.3 Process Screen 33
5.1.4 HMI Alarm Screen 35
5.2 Building Utilities 37
5.2.1 General – Stop/Start 37
5.2.2 Power Supply and E-Stops 37
5.2.2.1 Inputs 37
5.2.2.2 Outputs 37
5.2.2.3 Alarms 38
5.2.3 Building Temperature Control 38
5.2.3.1 Inputs 38
5.2.3.2 Setpoints 38
5.2.3.3 Logic 39
5.2.3.4 Alarms 39
5.3 Process Narrative 40
5.4 Sludge Dewatering System Module 41
5.4.1 Function 41
5.4.2 Input 42
5.4.3 Setpoints 43
5.4.4 Logic 44
5.4.5 Alarms 45
5.5 Statistics 46
5.6 Data & Time Settings 47
5.7 Factory Default Settings 48

6.0 PLANT START-UP, OPERATING GUIDELINES AND MONITORING 50
6.1 Mechanical & Electrical Start-up Procedure 50
6.2 Start-up 50
6.3 Polymer Dosing Sample Calculations 59
6.4 Record Keeping 60

7.0 SYSTEM MAINTENANCE 62
7.1 General 62
7.2 Schedule for Routine Operation and Maintenance Checkups 63
7.2.1 Volute Inspection and Maintenance (SP-901) 67
7.3 Trouble Shooting 73
7.3.1 B-7911 – Trouble Shooting 73
7.3.2 Backflow Preventer - Trouble Shooting 74
7.3.3 P-0901 – Moyno Pump – Trouble Shooting 75
7.3.4 P-0901 – Motor – Trouble Shooting 76
7.3.5 P-0902 – Polymer Doing Pump - Trouble Shooting 78
7.3.6 P-0903 – Pump - Trouble Shooting 83
7.3.7 SP-901 - Volute - Trouble Shooting 84

8.0 SHUT DOWN 94
8.1 General Components 94
8.2 B-7911 Shutdown 94
8.9 SP-901 – Volute Shutdown 95

9.0 SERVICE & SUPPORT 96
9.1 Commissioning and Start-up 96
9.2 Post commissioning Services 96

© 2019 by newterra, ltd.
All rights reserved. No part of this document may be reproduced or transmitted in any form or by any means, electronic, mechanical, photocopying, recording, or otherwise, without prior written permission of newterra ltd.

newterra ltd.
1291 California Avenue, Brockville, ON K6V 5W3
(800) 420-4056 / www.newterra.com

9.2.1 Technical Support 96
9.2.2 Spare Parts 97
9.2.3 Assistance in telemetry control and monitoring 97
9.2.4 Site visits and system audits 98

10.0 WARRANTY 100

List of Appendices

Appendix A Drawings and Bill of Material
Appendix B Packing Slips
Appendix C Commissioning Checklists
Appendix D Recommended Spare Parts List
Appendix E Technical Specs and Brochures for Parts and Equipment
Appendix F Safety Data Sheet
Appendix G Glossary & Terms
Appendix H Control Narrative

© 2019 by newterra, ltd.
All rights reserved. No part of this document may be reproduced or transmitted in any form or by any means, electronic, mechanical, photocopying, recording, or otherwise, without prior written permission of newterra ltd.

© 2019 by newterra, ltd.
All rights reserved. No part of this document may be reproduced or transmitted in any form or by any means, electronic, mechanical, photocopying, recording, or otherwise, without prior written permission of newterra ltd.

1.0 INTRODUCTION

The purpose of this manual is to provide necessary information for the Installation, Operation and Maintenance of the newterra Volute system.

	The newterra Volute system funcctions optimally if the operating procedures described in this manual are followed. If you have any questions after reading through this manual, please contact newterra ltd.

- This O&M Manual must be kept on-site and available to employees at all time.
- It is IMPERATIVE that employees read the manual BEFORE working in the plant.
- Employees must read ***Section 2*** – Health and Safety.
- Technical Support Department contacts are provided in ***Section 9***.

WARNING: ***Failure to comply with the instructions provided in this manual can cause equipment & property damage or severe personal injury, and will render the warranty null and void.***

© 2019 by newterra, ltd.
All rights reserved. No part of this document may be reproduced or transmitted in any form or by any means, electronic, mechanical, photocopying, recording, or otherwise, without prior written permission of newterra ltd.

newterra ltd.
1291 California Avenue, Brockville, ON K6V 5W3
(800) 420-4056 / www.newterra.com

© 2019 by newterra, ltd.
All rights reserved. No part of this document may be reproduced or transmitted in any form or by any means, electronic, mechanical, photocopying, recording, or otherwise, without prior written permission of newterra ltd.

newterra ltd.
1291 California Avenue, Brockville, ON K6V 5W3
(800) 420-4056 / www.newterra.com

2.0 SAFETY

2.1 Introduction

This section provides general personal and environmental safety information for newterra Volute operators.

Always refer to local codes and regulations.

- Specific equipment and parts safety information can be found in Appendix E.
- Sample Material Safety Data Sheets (MSDS/SDS) include detailed information regarding health & safety of chemicals used in wastewater treatment process and are presented in Appendix F.
- Information and guidelines outlined in this manual **must** be followed at all times prior to system installation and during operation and maintenance.

ESSENTIAL FOR SAFE OPERATION:

1. Installation and operation of the newterra Volute **must** only be carried out by **trained and qualified** personnel.
2. All necessary **safety precautions must** be carefully exercised, including but not limited to proper use of personal protective equipment considering given working environment and conditions.
3. All **electrical installations and troubleshooting must** only be carried out by licensed electricians.
4. All **plumbing work must** only be carried out by licensed plumbers or qualified personnel.
5. Please keep in mind that trees and shrubs taller than two meters located in close proximity to the plant buildings may become a safety concern at the time of installation or service.

DEFINITION OF SAFETY AND WARNING SIGNS USED IN THE MANUAL

ATTENTION SYMBOL

Special attention is required to ensure compliance with instructions concerning correct operating sequences to prevent damage to the plant or its function.

GENERAL WARNING SIGN

This symbol accompanies all important instructions or warnings associated with risks of injury as well as possible equipment damage.

© 2019 by newterra, ltd.
All rights reserved. No part of this document may be reproduced or transmitted in any form or by any means, electronic, mechanical, photocopying, recording, or otherwise, without prior written permission of newterra ltd.

CRITICAL WARNING SIGN

Warns against an unsafe situation or practice associated with severe injury as well as major equipment damage.

WARNING

2.2 Personal Protective Equipment (PPE)

Personal protective equipment (PPE) refers to protective clothing, gloves, helmets, goggles, or other garments or equipment designed to protect the wearer's body from injury or infection. The hazards addressed by protective equipment include physical, electrical, heat, chemicals, biohazards, and airborne particulate matter. ” Protective clothing" is applied to traditional categories of clothing, and "protective gear" applies to items such as pads, guards, shields, masks, and others.

The purpose of personal protective equipment is to reduce employee exposure to hazards when engineering and administrative controls are not feasible or effective to reduce these risks to acceptable levels. PPE is needed when there are hazards present. PPE has the serious limitation that it does not eliminate the hazard at source and may result in employees being exposed to the hazard if the equipment fails.

The following list includes the minimum scope of PPE that should be available to system operators:

2.2.1 Head protection

Hard hats, bump caps, or helmets are types of protection that should be considered if there is a hazard of head injury. Head injuries can occur under various circumstances including as the result of a slip or fall, working in confined areas or where there are low ceilings, where there may be falling objects. Hard hats should be worn at all times when overhead work is being conducted.

2.2.2 Eye and Face Protection

Eye protection with side shields should be used at all times while inside the newterra system as there may be a danger of flying objects, particles, liquids, sprays or other matter entering the eyes. Protection can take many forms including:

- safety glasses,
- goggles, or
- full face protection. This should be used if handling chemicals, waste product or working around pressurized lines (air of liquid).

© 2019 by newterra, ltd.
All rights reserved. No part of this document may be reproduced or transmitted in any form or by any means, electronic, mechanical, photocopying, recording, or otherwise, without prior written permission of newterra ltd.

newterra ltd.
1291 California Avenue, Brockville, ON K6V 5W3
(800) 420-4056 / www.newterra.com

2.2.3 Foot Protection

Foot protection should be used at all times within the newterra system. Foot protection is usually in the form of steel-toed work boots, with a steel shank to protect the bottom of the foot from puncture wounds. In wet environments, steel-toed boots that are waterproof and slip-resistant may be necessary.

2.2.4 Hand Protection

Hand protection should be worn within the newterra system. The workplace can create many hazards for hands, whether from chemicals, cuts or burns. No single glove can provide appropriate protection for every work situation, so it is important to assess the risk for each task and select a glove that provides specialized protection.

The following is a list of gloves and their suggested appropriate application:

- Coated fabric gloves: This type of glove can provide protection against some moderate concentrated chemicals. They can be used in laboratory work provided they are strong enough to protect against the specific chemical being handled.
- Rubber, plastic or synthetic gloves: These types of glove can be used when cleaning or working with oils, solvents and other chemicals.
- Leather gloves: These should be used when welding, as the leather can resist sparks and moderate heat. The risk of cuts and abrasions also can be minimized by wearing leather gloves.
- Kevlar gloves: These have a wide variety of industrial applications. They are cut- and abrasion-resistant and provide protection against both heat and cold.
- Chemical/liquid-resistant gloves: Several types of gloves help protect against specific chemicals:
    - Butyl rubber gloves: nitric acid, sulfuric acid, hydrochloric acid and peroxide
    - Natural latex/rubber gloves: water solutions or acids, alkalis, salts, and ketones
    - Neoprene gloves: hydraulic fluids, gasoline, alcohols and organic acids
    - Nitrile rubber gloves: chlorinated solvents

2.2.5 Body Protection

Body protection may be required in various situations including dusty environments or when spraying liquid pesticides or handling dangerous chemicals. The hazard to be controlled will determine the type of protection that is most appropriate, for example, an apron, coveralls or a full rain suit. As a minimum, the operator should be wearing work coveralls.

© 2019 by newterra, ltd.
All rights reserved. No part of this document may be reproduced or transmitted in any form or by any means, electronic, mechanical, photocopying, recording, or otherwise, without prior written permission of newterra ltd.

newterra ltd.
1291 California Avenue, Brockville, ON K6V 5W3
(800) 420-4056 / www.newterra.com

2.2.6 Hearing Protection

Hearing protection should be worn in work environments where noise levels exceed 85 decibels – such as around blowers and air compressors. There are many types of hearing protection, including earplugs or muffs. Hearing protection that is suitable for the work environment and provides adequate noise reduction should be chosen. Disposable ear plugs or headset style are acceptable.

2.2.7 Respiratory Protection

Respiratory hazards are invisible and can have severe impact on the health and safety of a worker. A respiratory hazard can be a particulate, gas or vapor, and include airborne contaminants, biological contaminants, dusts, mists, fumes, and gases, or oxygen-deficient atmospheres. Some respiratory health problems have long-term consequences and dramatically reduce quality of living due to difficulty breathing.

Personal Protective Equipment (PPE), such as respirators, are equipment worn by workers to minimize exposure to the occupational hazards of chemical, biological and other airborne substances. A hazard cannot be eliminated by the PPE, but the risk of injury can be reduced.

There are many types of respirators available to protect against a variety of atmospheric hazards. It is important that the respirator being used for a particular job protects against the hazard in question. Using the wrong respirator can be as dangerous as not wearing one at all.

All respirators must fit well and provide a proper seal with the wearer's face in order to provide adequate protection.

- Disposable respirators should be used where dusts, mists and fumes may be present. They must not be used in oxygen deficient atmospheres.
- Chemical cartridge respirators should be used to filter out gases and organic vapours. These respirators are hazard-specific, meaning that a cartridge designed to filter out a particular gas will not protect a worker from exposure to a different gas. They must not be used in oxygen deficient atmospheres.
- Powered air purifying respirators should be used where there may be excessive dust levels or pesticides.
- Gas masks should be used for high concentrations of specific gases.
- Supplied air respirators should be used in highly toxic and oxygen deficient atmospheres.

© 2019 by newterra, ltd.
All rights reserved. No part of this document may be reproduced or transmitted in any form or by any means, electronic, mechanical, photocopying, recording, or otherwise, without prior written permission of newterra ltd.

2.3 Bacterial Safety

The Volute wastewater and sludge cake contains a mixture of viable bacteria and other biological organisms. A wastewater treatment plant poses a number of bacterial hazards and consequently potential health risk. Immunization protects operator against infection. The use of proper hygiene measures, protective equipment, good housekeeping and common sense prevent contact with pathogens.

These measures prevent infection!

Ensure that hands are washed with an antibacterial soap and warm water and dried by disposable towels on a regular basis, especially prior eating!
Do not expose cuts or open sores to wastewater!
Use personal protective equipment (PPE) at all times in wastewater treatment facility!
Any concern about possible infection should be brought to the attention of medical physician immediately!

2.4 Chemical Safety

The following chemicals are used in operation of newterra System:

- Aquasep preservative is used in the portable eyewash / shower provided with the WWTP. In its undiluted state, it is causes eye irritation and mild skin irritation. At use dilution, this product is safe for its intended use and is not expected to irritate the eyes

When handling chemicals, it is important to wear proper personal protective equipment such as chemical goggles with combination full face shield, protective clothing with chemical splash apron and chemical-resistant rubber gloves

The detailed information regarding health & safety of chemicals used in wastewater treatment process can be found in sample SDS/MSDSs presented in Appendix F of this O&M Manual.

© 2019 by newterra, ltd.
All rights reserved. No part of this document may be reproduced or transmitted in any form or by any means, electronic, mechanical, photocopying, recording, or otherwise, without prior written permission of newterra ltd.

newterra ltd.
1291 California Avenue, Brockville, ON K6V 5W3
(800) 420-4056 / www.newterra.com

2.5 Locking out Equipment

Lockout procedures must be followed prior to performing mechanical or electrical maintenance to ensure that equipment has been de-energized. All relevant local guidelines and procedures must be applied. The person who locked out the device, should be the only person to remove the lockout.

When equipment is to be locked out, employers, supervisors and workers should follow accepted lockout principles, including:

- Pre-planning for the lockout by identifying all energy sources, switches, etc.
- Where lockout is complex, a written sequence in checklist form should be prepared for equipment access, lockout/tagout, clearance, release and start-up.
- All workers affected by the lockout should be notified.
- Equipment should be shut down by normal means by turning of switches and closing valves etc.
- Equipment should be isolated from energy sources by disconnecting or blocking the sources of energy.
- Lockout and tag the energy isolating devices by padlock or some other locking device that the worker has control over as well as a tag indicating that the equipment has been shut down.
- Verify that all energy sources have been isolated by attempting to cycle the equipment prior to working on it.
- When work is completed, release equipment from lockout.
- Test equipment

2.6 Entering Confined Spaces

"**confined space**" means a fully or partially enclosed space:

- that is not both designed and constructed for continuous human occupancy, and
- in which atmospheric hazards may occur because of its construction, location or contents or because of work that is done in it.

If you have a space that is fully or partially enclosed, the two conditions – (a) and (b) above – must both apply before the space can be considered a "confined space".

© 2019 by newterra, ltd.
All rights reserved. No part of this document may be reproduced or transmitted in any form or by any means, electronic, mechanical, photocopying, recording, or otherwise, without prior written permission of newterra ltd.

newterra ltd.
1291 California Avenue, Brockville, ON K6V 5W3
(800) 420-4056 / www.newterra.com

"**atmospheric hazards**" means:

- the accumulation of flammable, combustible or explosive agents,
- an oxygen content in the atmosphere that is less than 19.5 per cent or more than 23 per cent by volume, or
- the accumulation of atmospheric contaminants, including gases, vapours, fumes, dusts or mists, that could,
    - result in acute health effects that pose an immediate threat to life, or
    - interfere with a person's ability to escape unaided from a confined space.

Follow local laws and regulations with respect to entering a confined space.

If a workplace includes a confined space that workers may enter to perform work, it is highly recommended that written program for the confined space is developed and maintained in accordance with this local regulations and policies before a worker enters the confined space. A confined space program is a written document that would include: a method for recognizing each confined space to which the program applies; a method for assessing the hazards to which workers may be exposed; a method for the development of confined space entry plans; a method for training workers; and, an entry permit system.

2.7 Fire Safety

Exposed hot surfaces can create potential burn/ignition hazards. Blowers and air compressors compress ambient air, causing heat to be generated. This heat can bring the temperature of the air compressor head and blower piping to a level that can cause burns to exposed flesh.

Follow local laws and regulations with respect to Fire Safety and regulations.

© 2019 by newterra, ltd.
All rights reserved. No part of this document may be reproduced or transmitted in any form or by any means, electronic, mechanical, photocopying, recording, or otherwise, without prior written permission of newterra ltd.

newterra ltd.
1291 California Avenue, Brockville, ON K6V 5W3
(800) 420-4056 / www.newterra.com

2.8 Responsibility for Safety

2.8.1 Management

Management is responsible for providing a safe working environment. This is accomplished partly by:

- Ensuring that all facilities and equipment are built and maintained in accordance with the appropriate safety standards
- Providing adequate funds for equipment and plant maintenance
- Establishing, promoting, and enforcing a ***safety policy***
- Establishing a safety training program
- Supplying easy accessible eyewash and first-aid stations and proper personal protective equipment (PPE) for personnel servicing wastewater treatment facility.

2.8.2 Worker

- To develop a positive and professional attitude towards safety.
- To avoid mistakes caused by indifference to safety, poor work habits, lack of attentiveness, rushing the job, failure to observe established safety procedures and poor physical condition.

***Remember the "ABC" of accident prevention*:**
ALWAYS BE CAREFUL!!!

In addition to ***"being careful"*,** it is the responsibility of all workers to:

- Work in accordance with established safety procedures
- Follow the established safety rules
- Wear appropriate personal protective equipment (PPE)
- Report all accidents, no matter how minor
- Report potential safety hazards
- Participate in safety programs

© 2019 by newterra, ltd.
All rights reserved. No part of this document may be reproduced or transmitted in any form or by any means, electronic, mechanical, photocopying, recording, or otherwise, without prior written permission of newterra ltd.

newterra ltd.
1291 California Avenue, Brockville, ON K6V 5W3
(800) 420-4056 / www.newterra.com

2.8.3 Plant Safety – Simple Rules to Follow

Common sense plays a very important part in the safe operation of any type of plant!

- Wear the appropriate personal protective equipment at all times.
- Keep walkways clear of snow and ice, and loose objects such as pails, shovels, tools, etc.
- Clean up spills of oil, grease, chemicals, or other substances immediately.
- Keep all tools and similar equipment clean, in good condition, and properly stored when not in use.
- Replace all manhole covers, access trap doors, etc. as soon as possible. Erect a safety barrier if it is necessary to leave the opening uncovered.
- Use the proper tools when removing or replacing a manhole cover.
- Wear a safety belt whenever there is the possibility of falling even a short distance, or when working over water.
- Lock out and tag electrical equipment before working on it or the associated equipment.
- Ensure that moving machinery is properly guarded. Wear ear protection in noisy environments.
- Ensure that fire-fighting equipment is in good working condition.

© 2019 by newterra, ltd.
All rights reserved. No part of this document may be reproduced or transmitted in any form or by any means, electronic, mechanical, photocopying, recording, or otherwise, without prior written permission of newterra ltd.

2.9 Hazard Warning Signs/Symbols

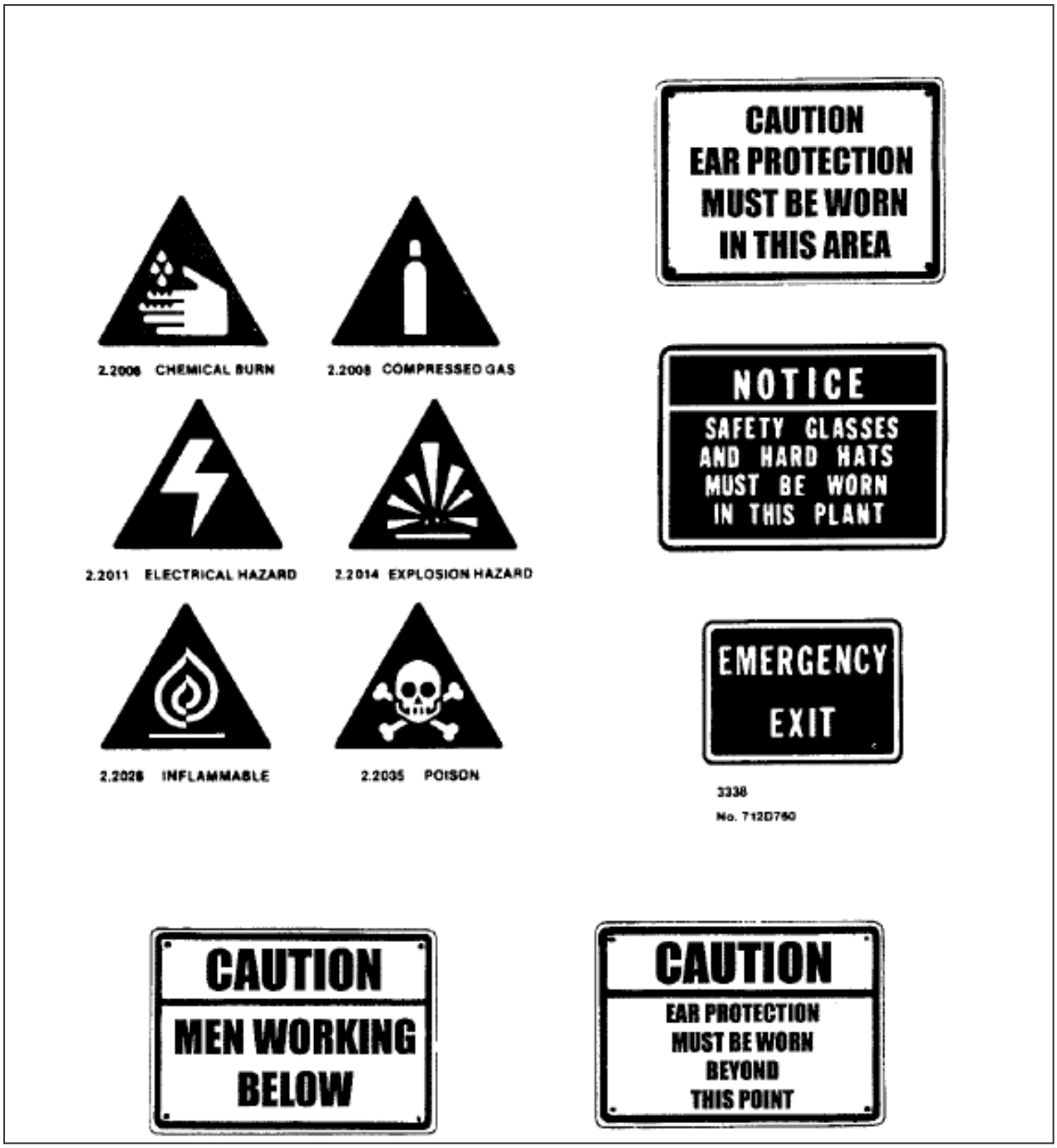

© 2019 by newterra, ltd.
All rights reserved. No part of this document may be reproduced or transmitted in any form or by any means, electronic, mechanical, photocopying, recording, or otherwise, without prior written permission of newterra ltd.

newterra ltd.
1291 California Avenue, Brockville, ON K6V 5W3
(800) 420-4056 / www.newterra.com

© 2019 by newterra, ltd.
All rights reserved. No part of this document may be reproduced or transmitted in any form or by any means, electronic, mechanical, photocopying, recording, or otherwise, without prior written permission of newterra ltd.

newterra ltd.
1291 California Avenue, Brockville, ON K6V 5W3
(800) 420-4056 / www.newterra.com

2.10 First Aid

First Aid is emergency care given immediately to an injured person. The purpose of first aid is to minimize injury and future disability. In serious cases, first aid may be necessary to keep the victim alive.

It often consists of a one-time, short-term treatment and requires little technology or training to administer. First aid can include cleaning minor cuts, scrapes, or scratches; treating a minor burn; applying bandages and dressings; drinking fluids to relieve heat stress, etc.
Operators must know the location of emergency telephone number(s), First Aid Kits, emergency eye wash stations and first aid attendant(s).

In over 98% of locations in the United States and Canada, dialing "9-1-1" from any telephone will link the caller to an emergency dispatch office—called a Public-Safety Answering Point (PSAP) by the telecom industry—which can send emergency responders to the caller's location in an emergency. In approximately 96 percent of the U.S., the Enhanced 9-1-1 system automatically pairs caller numbers with a physical address.

Follow local laws and regulations with respect to First Aid procedures and reporting.

© 2019 by newterra, ltd.
All rights reserved. No part of this document may be reproduced or transmitted in any form or by any means, electronic, mechanical, photocopying, recording, or otherwise, without prior written permission of newterra ltd.

newterra ltd.
1291 California Avenue, Brockville, ON K6V 5W3
(800) 420-4056 / www.newterra.com

2.10.1 CPR Poster

CPR for an Adult or Child

1

- Check the scene to ensure it is safe. If it is safe to do so, check the person and the person's ABCs (Airway, Breathing, Circulation).
- Call EMS/9-1-1 and get an AED or have someone else do this.

2

- Place the heel of one hand on the middle of the chest. Place the other hand on top.
- Do 30 compressions. Push hard, push fast.

3

- Open the airway by tilting the head back and lifting the chin. Pinch the nostrils closed and give 2 breaths.
- Repeat the cycle of 30 compressions and 2 breaths.
- Continue CPR until an AED arrives or more advanced care takes over.

The information on this poster does not replace formal First Aid & CPR training.

To find a Red Cross First Aid course in your area scan the QR code, or:
redcross.ca/firstaid |1.877.356.3226

CANADIAN RED CROSS

© 2019 by newterra, ltd.
All rights reserved. No part of this document may be reproduced or transmitted in any form or by any means, electronic, mechanical, photocopying, recording, or otherwise, without prior written permission of newterra ltd.

newterra ltd.
1291 California Avenue, Brockville, ON K6V 5W3
(800) 420-4056 / www.newterra.com

© 2019 by newterra, ltd.
All rights reserved. No part of this document may be reproduced or transmitted in any form or by any means, electronic, mechanical, photocopying, recording, or otherwise, without prior written permission of newterra ltd.

3.0 WASTEWATER TREATMENT PLANT DESIGN BASIS

3.1 General

The newterra system consists of Sludge Dewatering System (Volute) complete with all necessary accessories for the Meliadine Mine, in NUNAVUT, Canada.

The Sludge Dewatering System is designed to dewater the sludge produced by the existing WWTP. The basis of this process is the “Dewatering Drum” which is a type of screw press that utilizes a screw inside a moving casing.

In order to maintain an optimal concentration of mixed liquor suspended solids (MLSS) (typically 10 g/L) in the existing WWTP, a portion of the mixed liquor is periodically wasted. The wasted mixed liquor is pumped to the newterra Sludge Dewatering System, mixed with a polymer to coagulate suspended solids and produce large curds of solid materials (floc), and then processed by the Volute. The cake is then collected in a solids waste bin for landfill disposal and any water collected during the dewatering is sent back to the existing WWTP.

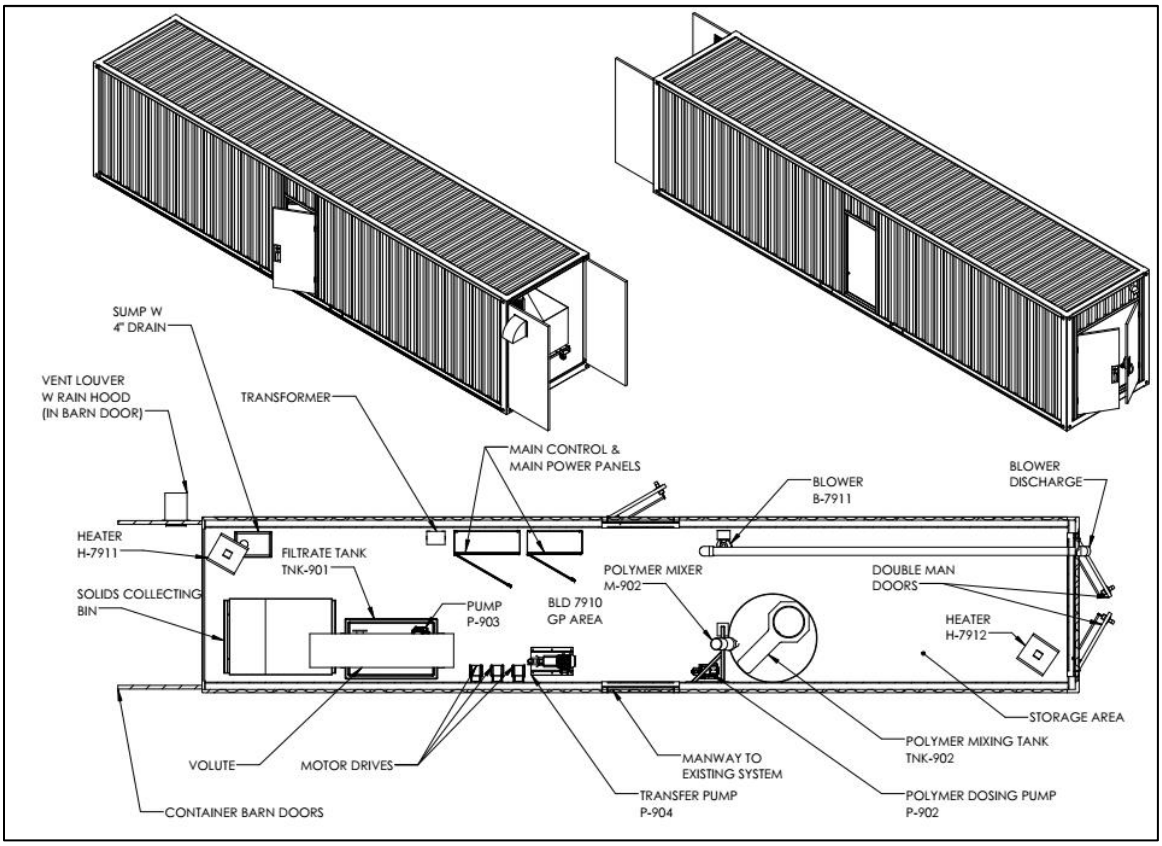

© 2019 by newterra, ltd.
All rights reserved. No part of this document may be reproduced or transmitted in any form or by any means, electronic, mechanical, photocopying, recording, or otherwise, without prior written permission of newterra ltd.

newterra ltd.
1291 California Avenue, Brockville, ON K6V 5W3
(800) 420-4056 / www.newterra.com

3.2 Design Parameters

PARAMETER	DESIGN VALUE	UNIT
Minimum daily flow	3	m^3/d
Maximum daily flow	5	m^3/d
Site power[1]	Three-phase, 347/600VY, 60Hz Maximum Available Fault Current: 65,000 Symmetrical RMS Amps (newterra's default design standard)	
System area classification	According to NFPA 820, 2016 Edition	
Ambient temperatures	-40 to 25	°C
Elevation	100	m

NOTES:

1. The system will not be rated for service entrance but this can be provided. Please contact newterra to discuss if this is desired.

3.3 Waste Activated Sludge Production

LOCATION/HANDLING STAGE	VOLUME [1]	UNIT	SOLIDS CONTENT	UNIT
WAS Volume with Dewatering	0.28	m^3/d	18%	w/w dry solids

NOTES:

1. WAS Production values are estimated based on the system operating at ADF and average loading and will vary based on actual operational conditions

3.4 Estimated Chemical Consumption

CHEMICAL	CONCENTRATION	FUNCTION	DESIGN VALUE [1]	UNIT
Cationic Polymer	Solid	Sludge dewatering	0.5	kg/day

NOTES:

1. Chemical consumption values are estimated based on the system operating at ADF and average loading and will vary based on actual operational conditions

© 2019 by newterra, ltd.
All rights reserved. No part of this document may be reproduced or transmitted in any form or by any means, electronic, mechanical, photocopying, recording, or otherwise, without prior written permission of newterra ltd.

newterra ltd.
1291 California Avenue, Brockville, ON K6V 5W3
(800) 420-4056 / www.newterra.com

4.0 PLANT INSTALLATION, INSPECTION, AND TESTING

4.1 System Overview

The newterra system consists of Sludge Dewatering System (Volute) complete with all necessary accessories for the Meliadine Mine, in NUNAVUT, Canada.

The Sludge Dewatering System is designed to dewater the sludge produced by the existing WWTP. The basis of this process is the “Dewatering Drum” which is a type of screw press that utilizes a screw inside a moving casing.

In order to maintain an optimal concentration of mixed liquor suspended solids (MLSS) (typically 10 g/L) in the existing WWTP, a portion of the mixed liquor is periodically wasted. The wasted mixed liquor is pumped to the newterra Sludge Dewatering System, mixed with a polymer to coagulate suspended solids and produce large curds of solid materials (floc), and then processed by the Volute. The cake is then collected in a solids waste bin for landfill disposal and any water collected during the dewatering is sent back to the existing WWTP.

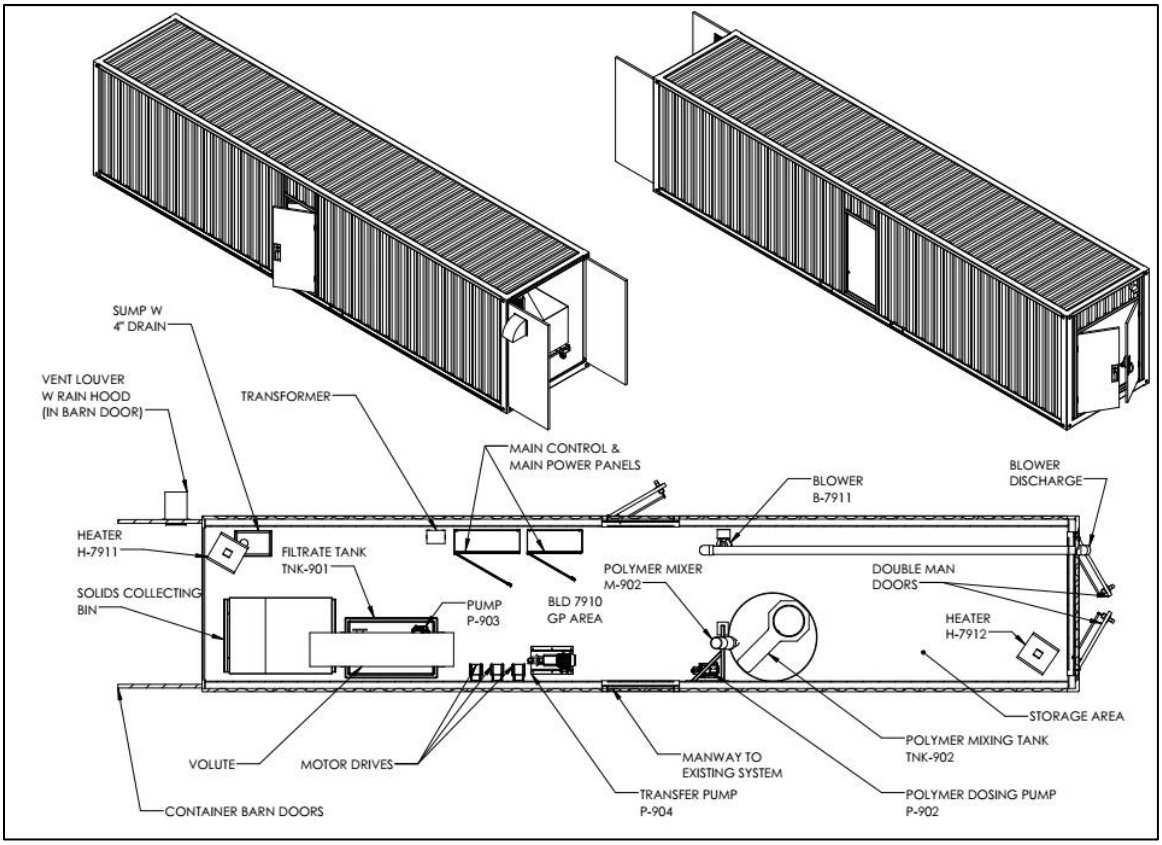

© 2019 by newterra, ltd.
All rights reserved. No part of this document may be reproduced or transmitted in any form or by any means, electronic, mechanical, photocopying, recording, or otherwise, without prior written permission of newterra ltd.

4.2 Site Conditions Requirements

- Installation site for the **newterra** System should be close to the sewer drain and have a sufficient power source (refer to Electrical Drawings in Appendix A).
- Location must permit easy access for equipment capable of transporting, offloading, and handling of the designed loads.
- There should be adequate space around the containers for safe operation and maintenance.
- The firm base (foundation) must be built to support the full operating weight of the plant to prevent buildings from shifting and pipe/electrical conduit connection failure – pilings are recommended.

The firm base for the container must be level and must be capable of supporting the operating weight.

WARNING: ***Always check with the local utility companies for the location of water lines, electrical and telephone cables, or any additional hazards below grade, prior to excavation. Failure to do so could result in severe bodily injury or death.***

4.3 Inspection upon Delivery

The **newterra** System is carefully manufactured, checked, and tested at the manufacturing plant. All equipment is pre-wired, pre-piped, mounted inside the enclosures and factory tested. Upon receiving the system, please perform the following:

- Place the container onto the prepared firm base to avoid sagging, equipment vibration, and shifting. When lifting the containers, ensure that lifting equipment is clear of overhead obstructions such as power lines, trees or rooftops. Be careful during this procedure!
- Be careful when offloading the container to prevent damage to the internal pipe work.
- Check the containers for any signs of shipping damages.
- Inspect the container to ensure that no components or parts are missing (refer to the Packing List – see Appendix B). Also, inspect for visual damage of the tanks, pumps, blowers, piping, and control panel.

© 2019 by newterra, ltd.
All rights reserved. No part of this document may be reproduced or transmitted in any form or by any means, electronic, mechanical, photocopying, recording, or otherwise, without prior written permission of newterra ltd.

- If the container, equipment inside and any parts shipped loose are free of damage, proceed with the installation.

For any damages or loss of equipment, **please notify the newterra ltd. Project Manager at (800) 420-4056 immediately.**

4.4 Plant Initial Set up

WARNING: ***The installer must ensure that the installation site is safe from hazards. These could include excavations left open overnight, debris left lying around, and tanks & equipment not properly blocked. Provisions must be made to eliminate the potential hazards by roping off and proper shoring around the excavations, cleaning up at the end of each workday, and proper storage of equipment. Failure to do so could result in severe injury or death.***

4.4.1 Installation Checklist

At Appendix C is the installation and commissioning checklist for the system. Below is a summary of installation activities.

4.4.1.1 Customer's Scope of Supply

- Installation of loose shipped equipment supplied by newterra
- Placement and anchoring (if required) of equipment
- Interconnecting piping supply and installation
- Interconnecting electrical and controls supply and installation including connection inside newterra's control panel
- Electrical power supply to the newterra electrical panel, lightning, grounding, etc.
- Permitting
- Potable water supply to the plant site for plant hydraulic test during startup
- Chemicals supply and storage
    - NOTE: Based on local regulations, additional safety equipment may be required to store and handle chemicals on the site which have not been included as part of this proposal. This may include but be limited to: eye wash stations, safety showers, spill containment, secondary containment, isolation curtains, isolated ventilated bulk storage buildings, personal protective equipment, constant ventilation systems, vapor suppression equipment, and spill containment equipment. newterra can provide pricing for these options upon request.
- Sludge cake disposal
- All civil work including design
- Tank sizing as per newterra supplied PFD, to be confirmed during detailed design

© 2019 by newterra, ltd.
All rights reserved. No part of this document may be reproduced or transmitted in any form or by any means, electronic, mechanical, photocopying, recording, or otherwise, without prior written permission of newterra ltd.

newterra ltd.
1291 California Avenue, Brockville, ON K6V 5W3
(800) 420-4056 / www.newterra.com

4.4.1.2 Civil Checklist

- Ensure that a potable water supply is available (used for hydraulic testing during start-up, membrane cleaning, washing hands and for performing onsite testing).
- Ensure availability of on-site emergency eyewash station and personal protection equipment.
- Remove hatch covers from the interconnecting ports.
- All doors are closing, latching and locking
- Weather stripping has been installed around each door
- Door sweeps have been installed on each door
- Louvers and hoods have been installed and sealed

4.4.1.2 Electrical Checklist

- Install Volute on stand and complete all electrical connections as per drawings – See Appendix A
- Connect electrical power to the Main Disconnect from available source ensuring correct phase rotation (See Electrical Drawings at Appendix A for power source specifications).
- Connect electrical power to the Control Panel (See System Layout drawing in Appendices A for locations)
- Ensure that proper electrical grounding and lightning protection is available.
- Switch Main Switch Panel's isolator to the ON position.
- Check all internal lighting and heating for correct operation.
- Install packed external lighting into brackets above the doorways.
- All internal electrical connections have been terminated
- Confirm Phase Monitor is not in alarm
- Site voltage measured:
    - L1/L2 - L2/L3 - L3/L1 - L1/GRD - L2/GRD - L3/GRD:
- Check field wiring and piping as per drawings
- Check panel for loose wiring. Correct as required
- Check voltage on AC transformer
- Check voltage on DC transformer
- Check I.S. barrier is grounded as per input drawing
- Electrical connections between containers

4.4.1.3 Mechanical Checklist

- Install Volute on stand and complete all mechanical connections as per drawings – See Appendix A
- All hoses and mechanical connections have been hooked up
- All mechanical connections between containers
- Ensure all unions and fittings are tight, as some are loosened to prevent stress in shipping
- Check alignment of motors, correct as required

© 2019 by newterra, ltd.
All rights reserved. No part of this document may be reproduced or transmitted in any form or by any means, electronic, mechanical, photocopying, recording, or otherwise, without prior written permission of newterra ltd.

newterra ltd.
1291 California Avenue, Brockville, ON K6V 5W3
(800) 420-4056 / www.newterra.com

4.4.2 System Electrical Specifications

Verify site power per system design criteria. Additional detail is at Appendix A.

ELECTRICAL SPECIFICATIONS	
VOLTAGE	600VY 3 WIRE
PHASE	3
FREQUENCY	60Hz
FULL LOAD AMPS	31
MAIN DISCONNECT SIZE	60
MAIN OVERCURRENT PROTECTION RATING	40
SCCR SYMMETRICAL (kAMPS)	65
SYSTEM APPROVAL AND CLASSIFICATION	cMETus GP
PANEL APPROVAL AND CLASSIFICATION	cMET GP TO C22.2 NO.14
ELECTRICAL INSTALL SPECIFICATIONS	PVC
WIRE SPECIFICATIONS	WIRE TO CANADIAN STANDARDS

Please refer to the as-built electrical drawings in Appendices A of this manual.

ATTENTION	**Only trained and certified electricians should make the electrical connections.**

4.5 Plant Initial Testing

The newterra Dewatering System (except for the Volute which will be delivered directly to site) undergoes electrical and leakage tests in our manufacturing facility prior to shipment; however, fittings could shift during shipment, so it is our standard practice to perform initial testing on the plant after installation, including **dry and hydraulic tests.**

© 2019 by newterra, ltd.
All rights reserved. No part of this document may be reproduced or transmitted in any form or by any means, electronic, mechanical, photocopying, recording, or otherwise, without prior written permission of newterra ltd.

newterra ltd.
1291 California Avenue, Brockville, ON K6V 5W3
(800) 420-4056 / www.newterra.com

4.5.1 Dry Test

The following tasks have to be performed **before** potable water is introduced into the system:

- Ensure that all tanks are clean and free of any dirt or debris (this is to prevent obstruction or damage to the piping, pumps, and membranes).
- Ensure that all connections have been provided and joints have been tightened.
- Check the placement of the air diffusers, if incorrectly positioned, proper adjustment has to be performed.
- Ensure that a functional check of the electrical and control system has been performed (please refer to the newterra Commissioning Checklist presented in Appendix C).
- Confirm heater/fan operations

4.5.2 Hydraulic Test

The hydraulic test is performed using potable water to:

- Check for and fix any leakage;
- Check the setting of level switches/transmitters;
- Check the hydraulic flow through the plant;
- Check if all the ancillary equipment and controls of the plant function as per design;
- Recalibrate instruments (if applicable);
- Perform clean water test on the chemical distribution system.

© 2019 by newterra, ltd.
All rights reserved. No part of this document may be reproduced or transmitted in any form or by any means, electronic, mechanical, photocopying, recording, or otherwise, without prior written permission of newterra ltd.

newterra ltd.
1291 California Avenue, Brockville, ON K6V 5W3
(800) 420-4056 / www.newterra.com

5.0 OPERATION of newterra SLUDGE DEWATERING SYSTEM

This section provides a description of the Sludge Dewatering System process and how it is controlled. For a more complete understanding, review the **Process & Instrumentation Diagram** and **System Layout** provided in **Appendix A** of this manual as well. The detailed Control Narrative with factory setpoints, alarms and logic, please see **Appendix H**.

Most of the equipment in the **newterra** Sludge Dewatering System can be operated in either manual or automatic mode. The system is designed to always run in auto mode. The manual option is provided mainly for maintenance purposes.

5.1 Control System – Main SCADA Control, PLCs and HMIs

The **newterra** Sludge Dewatering System is controlled by a PLC (Programmable Logic Controller). The system is programmed to:

1. Receive analog and digital input signals from the switches and transmitters being controlled;
2. Process the information using the structure and rules entered into the program;
3. Generate outputs that control the equipment - turn equipment OFF or ON.
4. Generate alarms if critical conditions are present
5. Provide a HMI (Human Machine Interface) touch-screen for ease of operator process monitoring and control.

© 2019 by newterra, ltd.
All rights reserved. No part of this document may be reproduced or transmitted in any form or by any means, electronic, mechanical, photocopying, recording, or otherwise, without prior written permission of newterra ltd.

5.1.1 HMI Control Screen

An example of an HMI Control Screen is provided below:

System Operation

- (RUNNING/STOPPED) Indicates whether the system is currently in the **RUN** mode or turned off
- **START** button puts the system in **RUN** mode as long as there are no alarms preventing the start up of the system.
- **STOP** button stops the system operation.
- **RESET** button is used to clear alarms after they have been addressed
- Clarifier blowers, equalization tank blowers and the building fan if on, continue to run even after the **STOP** button has been pressed.
- The operator has the option to **START/STOP** the system or an individual Train. See below. This feature mainly applies to the future expansion of this project.

The system will always remain in auto run mode, unless the kill switch is pressed, or power is down.

The system will automatically restart after power failure.

A menu to navigate through the process and data information screens on the main HMI screen as shown above.

© 2019 by newterra, ltd.
All rights reserved. No part of this document may be reproduced or transmitted in any form or by any means, electronic, mechanical, photocopying, recording, or otherwise, without prior written permission of newterra ltd.

newterra ltd.
1291 California Avenue, Brockville, ON K6V 5W3
(800) 420-4056 / www.newterra.com

Screen-shots presented in this manual are for example only and may not be representative of ideal operation.

5.1.2 HOA (Hand/Off/Auto)

- Each PLC controlled motor or valve in the system has a Hand/Off/Auto (HOA) Switch to control its operation.

- The HAND (H) position of a switch is used for testing and troubleshooting of the system. As a safety precaution to prevent damage to equipment, the equipment will operate for two minutes in hand mode and will then turn OFF and revert to the (O) position. Operators must be present when equipment is operated in the manual mode. This feature may be disabled – see below.

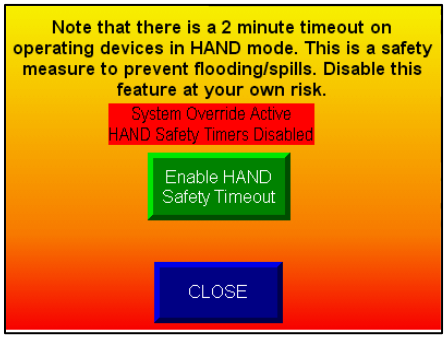

- All the PLC controlled motors/valves can be accessed individually from the process screen when selecting the motor or valve. A HOA pop up will be displayed to the operator.

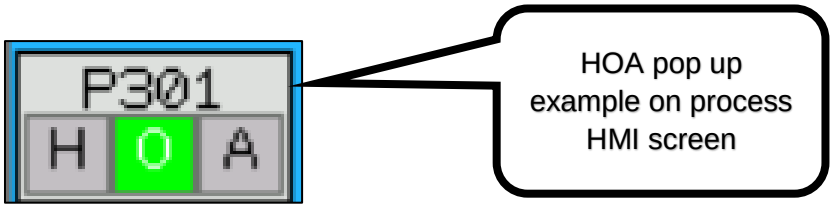

© 2019 by newterra, ltd.
All rights reserved. No part of this document may be reproduced or transmitted in any form or by any means, electronic, mechanical, photocopying, recording, or otherwise, without prior written permission of newterra ltd.

5.1.3 Process Screen

The main process screen can be accessed from the main HMI menu – see below. There is only one process screen for this system.

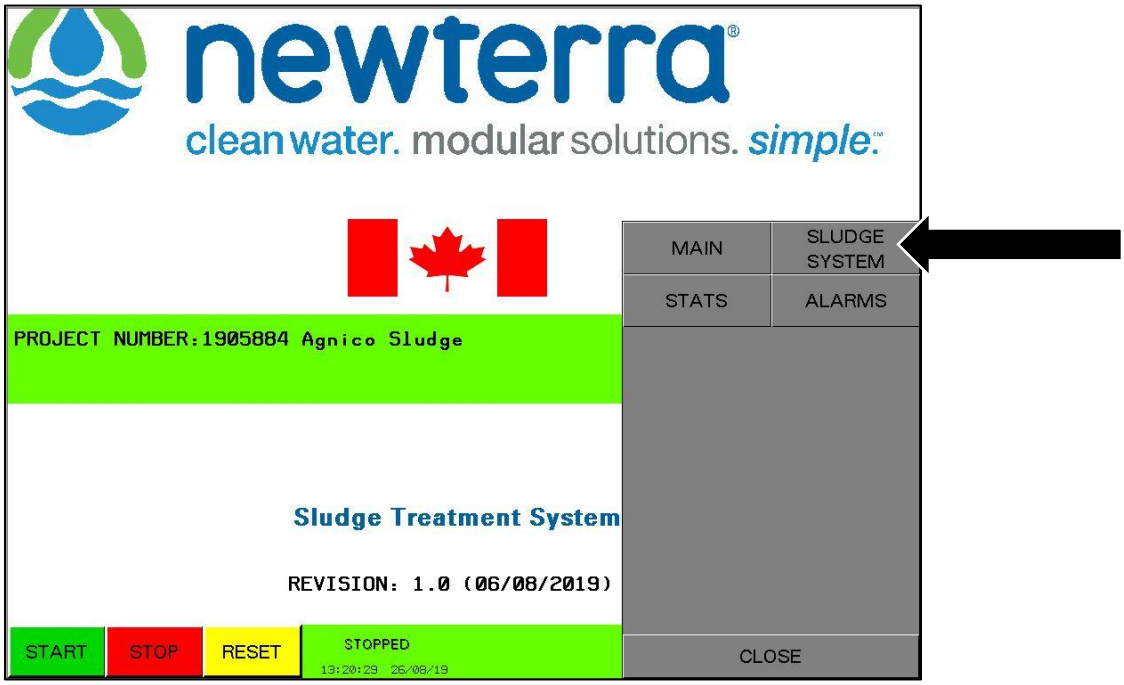

Switches are indicated on the HMI as follows:

- LSHH – level switch high high
- LSH – level switch high
- LSLL – level switch low low
- TSLL – temperature switch low low
- LSL – level switch low
- PSL – pressure switch low

© 2019 by newterra, ltd.
All rights reserved. No part of this document may be reproduced or transmitted in any form or by any means, electronic, mechanical, photocopying, recording, or otherwise, without prior written permission of newterra ltd.

newterra ltd.
1291 California Avenue, Brockville, ON K6V 5W3
(800) 420-4056 / www.newterra.com

Status of the switches are indicated as follows:

Grey when **OFF**
Green when **ON**
RED when in Alarm

Tank levels are indicated by level switch positions and percent full values where level transmitters are provided. For example, the following screen shows TNK-501 LSLL is green, LSHH is grey and the percent full as 44.1%. This indicates that the tank is 44.1% full, and the water level is above LSLL and below LSHH. In TNK-301, LSLL is red and this indicates an alarm condition and the level is below the LSLL level switch setting.

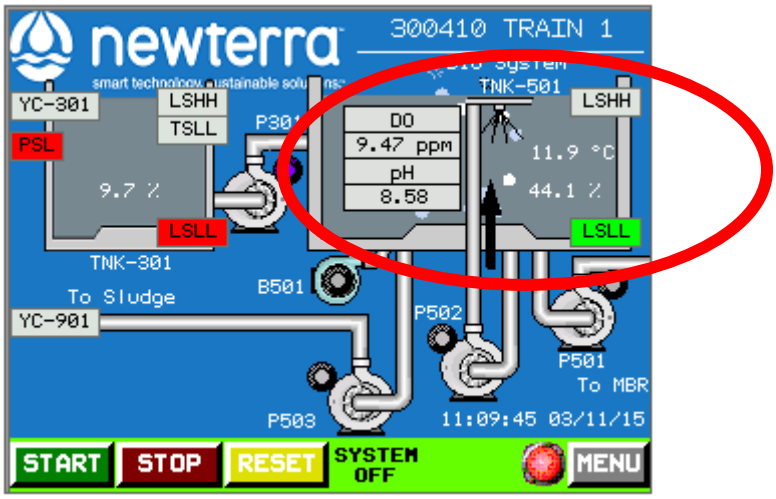

NOTE: Touching a device on the process screen will open an HOA popup for that device.

- The device status indicator color coding is as follows:

Indicator Color	Operational Status
Yellow	Manual operation
Orange	Interlock/ Comms Failure
Red	Failure
Green	ON / OK
Purple	Standby
Pink	Unknown
Black	Faulty contactor
Grey	Off

© 2019 by newterra, ltd.
All rights reserved. No part of this document may be reproduced or transmitted in any form or by any means, electronic, mechanical, photocopying, recording, or otherwise, without prior written permission of newterra ltd.

5.1.4 HMI Alarm Screen

- When the **ALARMS** button is flashing red, this indicates an alarm is present in the system. The Operator can either press the **ALARMS** red flashing button OR select the **ALARMS** button on the main HMI menu to be routed to the Active Alarms Screen.

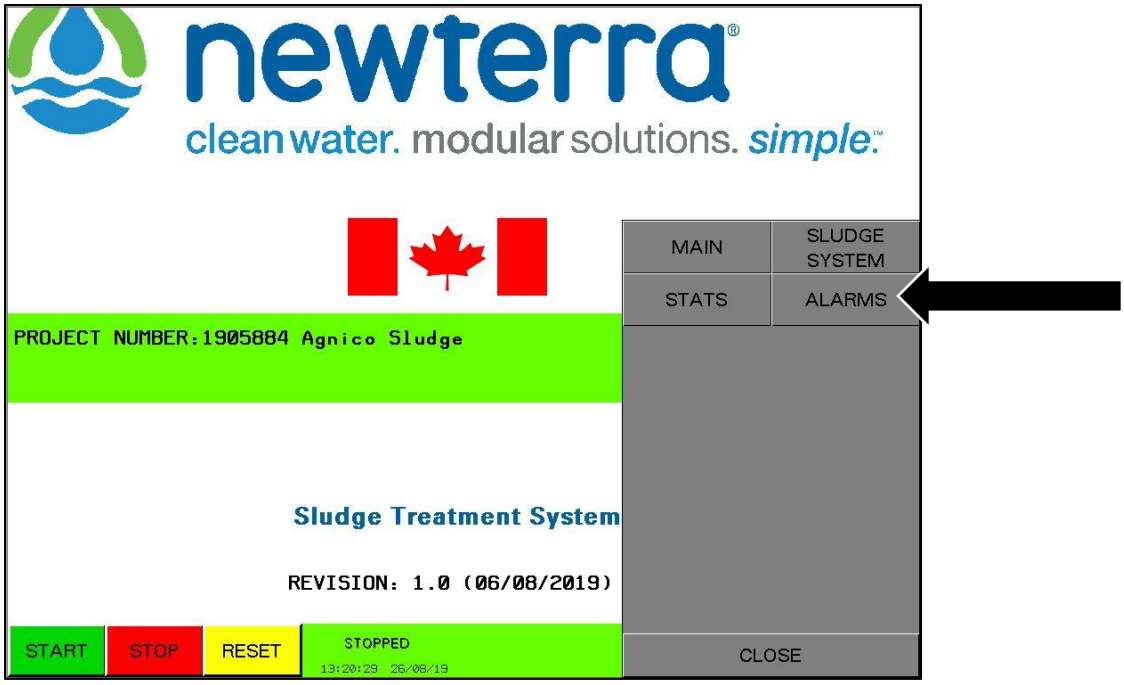

© 2019 by newterra, ltd.
All rights reserved. No part of this document may be reproduced or transmitted in any form or by any means, electronic, mechanical, photocopying, recording, or otherwise, without prior written permission of newterra ltd.

- To clear an alarm, press the alarm in question, then the yellow press **ACK ALARM** button. The operator can confirm all alarms by pressing the yellow **ACK ALL ALARMS** button as well. See below.
- A complete alarm history is also available by pressing the **ALM HISTORY** button on this HMI screen (see below).

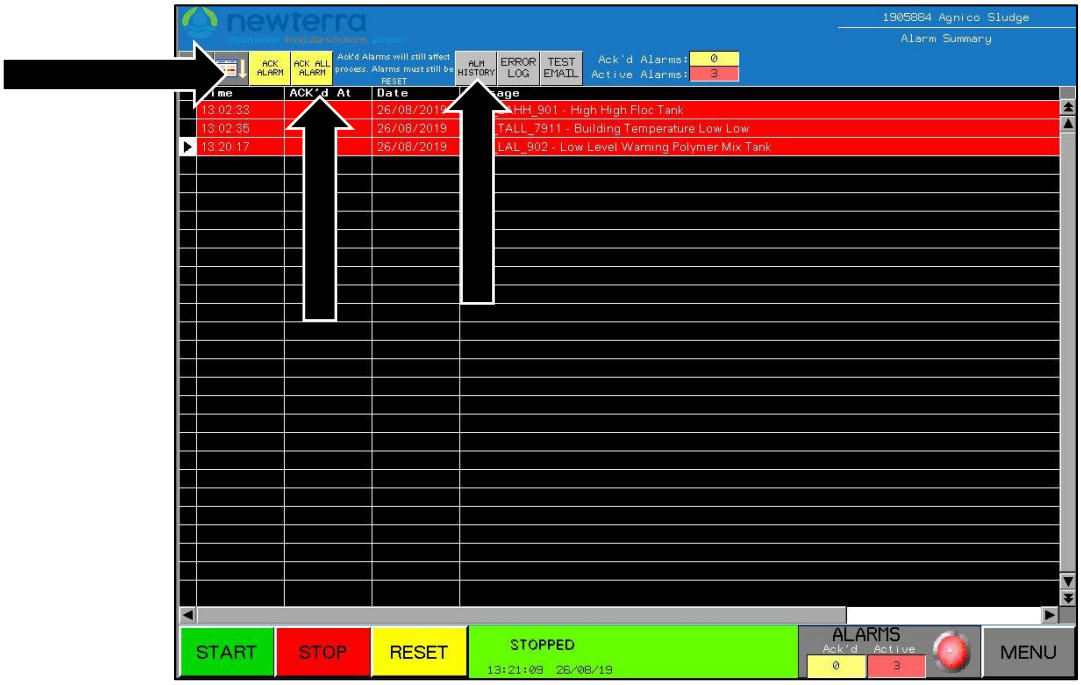

NOTE: All high level alarms (identified as LSHH on P&ID and HMI) indicate a critical situation for imminent tank overflow and could result in pump(s) shutting off to avoid overflow situations.

© 2019 by newterra, ltd.
All rights reserved. No part of this document may be reproduced or transmitted in any form or by any means, electronic, mechanical, photocopying, recording, or otherwise, without prior written permission of newterra ltd.

newterra ltd.
1291 California Avenue, Brockville, ON K6V 5W3
(800) 420-4056 / www.newterra.com

5.2 Building Utilities

5.2.1 General – Stop/Start

Description	Control Logic
Start/Stop	The system will start when the start button is pressed on the HMI.
Start/Stop	The system will automatically restart after recovery from a power failure after a 30 second delay, unless the Start button is pressed first .
Start/Stop	To stop the system, press the stop button on the HMI display.
Start/Stop	The system will shut down under some alarm conditions, see the modules below for these specific circumstances.
Start/Stop	All equipment will have to be put in “AUTO” in order to operate with the exception of heaters, auto-drain valves, and building fans.
Start/Stop	**Note:** when components are put in “HAND” mode the “AUTO” logic described below will be bypassed and the component will run regardless of inputs unless the emergency stop button is activated. This is done for on-site testing and troubleshooting purposes. When a soft HOA switch (a software based toggle switch present in remote telemetry or HMI based systems) is used, a 2 minute safety timer is used on all components to prevent running them dry or excessive flooding due to operator error.
YI-8201 System Running Light	ON when system is in RUN mode
YA-8201 System Alarm Light	ON when system is in Alarm
YA-8201 Auxiliary Alarm Output	When a system shutdown alarm occurs the alarm relay (YA-8202) will activate. This is a courtesy relay providing two sets of contacts, a set of normally open dry contacts and a set of normally closed dry contacts for tying into external equipment if required.

5.2.2 Power Supply and E-Stops

5.2.2.1 Inputs

TAG	Description	Input Type	Device Span/PLC Scale	Notes
UPS-BATT	UPS is on battery power	UPS-ON-BATT = ON	Y	Closes on Overload Fault
UPS-FLT	UPS Fault	UPS-FLT = ON	Y	Closes on Overload Fault
ES-8201	Emergency Stop - MCP	Discrete N.C.		HMI Panel
UPSA-ON-BATT	UPS on Battery Power	Discrete N.O.		
UPSA-FLT	UPS Fault	Discrete N.O.		

5.2.2.2 Outputs

None

© 2019 by newterra, ltd.
All rights reserved. No part of this document may be reproduced or transmitted in any form or by any means, electronic, mechanical, photocopying, recording, or otherwise, without prior written permission of newterra ltd.

newterra ltd.
1291 California Avenue, Brockville, ON K6V 5W3
(800) 420-4056 / www.newterra.com

5.2.2.3 Alarms

Alarm	Alarm Description	Actuation Control	Delay	Self Resetting (Y)	Notes
ESA-8201	Emergency Stop Alarm	ESA-8201 will be in alarm when any E-Stop within the system is Activated	Immediate		Any E-Stop Alarm has been activated.
PLCA-8201	General PLC Alarm	PLCA-8201 = Active	Immediate		A general PLC alarm (PLCA-8201) will be triggered by the PLC if it detects a critical internal fault. The alarm will shut down the system and will require newterra technical help to recover.
PWR-FAIL	PLC First Scan Power Fault	POWER RECOVERY TO PLC	Immediate		A first scan alarm indicates that power has been lost and then recovered to the PLC
UPS-BATT	UPS is on battery power	UPS-ON-BATT = ON	Immediate	Y	
UPS-FLT	UPS Fault	UPS-FLT = ON	Immediate	Y	

5.2.3 Building Temperature Control

5.2.3.1 Inputs

TAG	Description	Input Type	HMI Display Units	Device Range and Units	Notes
PSL-7911	Pressure Switch Low	Discrete N.O.	NA	0.07-0.22 inWC	Proof of Flow Pressure Switch
TSLL-7911	Temperature Switch Low	Discrete N.O.			BLD-7910

5.2.3.2 Setpoints

There are no setpoints.

© 2019 by newterra, ltd.
All rights reserved. No part of this document may be reproduced or transmitted in any form or by any means, electronic, mechanical, photocopying, recording, or otherwise, without prior written permission of newterra ltd.

newterra ltd.
1291 California Avenue, Brockville, ON K6V 5W3
(800) 420-4056 / www.newterra.com

5.2.3.3 Logic

TAG / Mode	Description	Control Logic	Output Type
H-7911	Building Heater	The building heater (H-7911) will turn on when the building temperature falls below the manual setpoint of it's integral thermostat TSL-7911. The building heater (H-7911) will turn off when the building temperature exceeds the manual setpoint of TSL-7911.	Direct
H-7912	Building Heater	The building heater (H-7912) will turn on when the building temperature falls below the manual setpoint of it's integral thermostat TSL-7912. The building heater (H-7912) will turn off when the building temperature exceeds the manual setpoint of TSL-7912.	Direct

5.2.3.4 Alarms

Alarm	Alarm Description	Actuation Control	Delay	Self Resetting (Y)	Notes
PAL-7911	Pressure Alarm Low	PSL-7911 = InActive	5s	Y	Alarm indicates possible continuous ventilation failure, indicating risk that the room may become Class 1 Division 2 rated.
TALL-7911	Temperature Alarm Low Low	TSLL-7911 = InActive	5s	Y	BLD-7911

© 2019 by newterra, ltd.
All rights reserved. No part of this document may be reproduced or transmitted in any form or by any means, electronic, mechanical, photocopying, recording, or otherwise, without prior written permission of newterra ltd.

newterra ltd.
1291 California Avenue, Brockville, ON K6V 5W3
(800) 420-4056 / www.newterra.com

5.3 Process Narrative

The suspended solids that accumulate in the existing Wastewater System have grown from the influent organics and ammonia, as well as non-biodegradable solids from the influent wastewater. To maintain an optimal concentration of MLSS, a portion of the mixed liquor is periodically pumped by P-0901 to the sludge dewatering press (SP-901). The sludge dewatering press flocculates the solids with a polymer and separates the solids from the liquid resulting in a cake with high solids content, reducing the volume of solids to be disposed of off site. Filtrate from the sludge dewatering press is pumped either to the Wastewater System inlet or the existing sludge holding tank.

© 2019 by newterra, ltd.
All rights reserved. No part of this document may be reproduced or transmitted in any form or by any means, electronic, mechanical, photocopying, recording, or otherwise, without prior written permission of newterra ltd.

5.4 Sludge Dewatering System Module

A schematic of the Sludge Dewatering System (Volute) Module is located on the **SLUDGE SYSTEM** HMI screen (shown below).

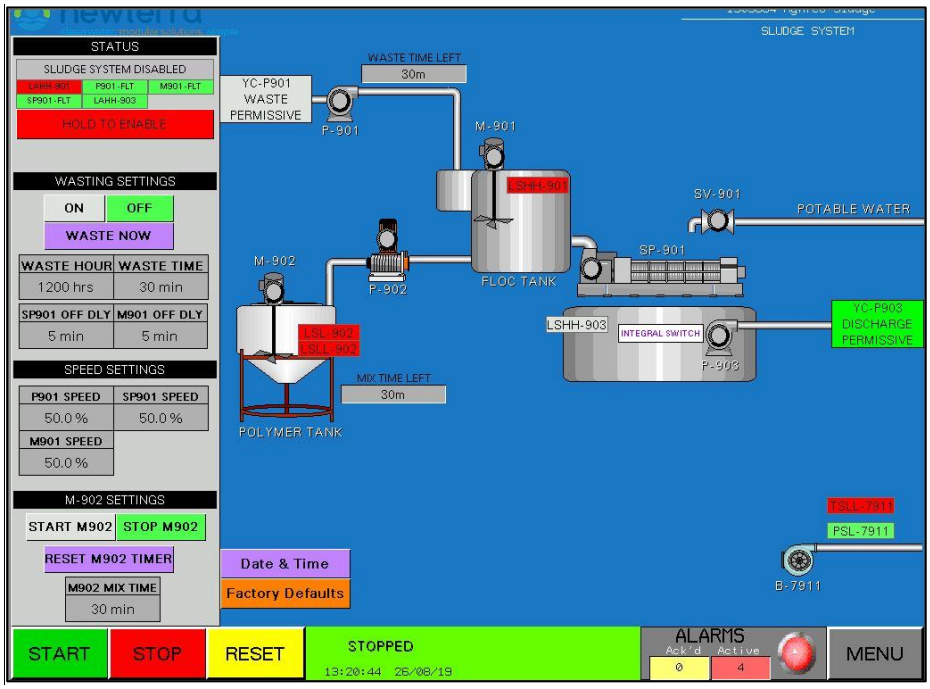

5.4.1 Function

The suspended solids that accumulate in the existing Wastewater System have grown from the influent organics and ammonia, as well as non-biodegradable solids from the influent wastewater. To maintain an optimal concentration of MLSS, a portion of the mixed liquor is periodically pumped by P-0901 to the sludge dewatering press (SP-901). The sludge dewatering press flocculates the solids with a polymer and separates the solids from the liquid resulting in a cake with high solids content, reducing the volume of solids to be disposed of off site. Filtrate from the sludge dewatering press is pumped either to the Wastewater System inlet or the existing sludge holding tank.

© 2019 by newterra, ltd.
All rights reserved. No part of this document may be reproduced or transmitted in any form or by any means, electronic, mechanical, photocopying, recording, or otherwise, without prior written permission of newterra ltd.

newterra ltd.
1291 California Avenue, Brockville, ON K6V 5W3
(800) 420-4056 / www.newterra.com

5.4.2 Input

TAG	Description	Input Type	HMI Display Units	Device Range and Units	Device Span/PLC Scale	Notes
VFD-P901	VFD Status				Y	WAS Inlet Pump
VFD-SP901	VFD Status					Volute Sludge Press Shaft
VFD-M901	VFD Status					Floc Tank Mixer
LSHH-0901	Level Switch High High	Discrete N.C.			Y	Volute Flocuulation Tank
LSL-0902	Level Switch Low	Discrete N.O.			Y	Polymer Mixing Tank
LSLL-0902	Level Switch Low Low	Discrete N.O.			Y	Polymer Mixing Tank
M-0902-FLT	Mixer Fault	Discrete N.O.				Polymer Mixer
LSHH-0903	Level Switch High High	Discrete N.O.			Y	Filtrate Tank
YC-P901	P-0901 Run Permissive	Discrete N.C.			Y	Customer tie in to allow P-0901 to RUN
YC-P903	P-0903 Run Permissive	Discrete N.C.			Y	Customer tie in to allow P-0903 to RUN
PSL-7911	Pressure Switch Low	Discrete N.O.	NA	0.07-0.22 inWC		Proof of Flow Pressure Switch

© 2019 by newterra, ltd.
All rights reserved. No part of this document may be reproduced or transmitted in any form or by any means, electronic, mechanical, photocopying, recording, or otherwise, without prior written permission of newterra ltd.

newterra ltd.
1291 California Avenue, Brockville, ON K6V 5W3
(800) 420-4056 / www.newterra.com

5.4.3 Setpoints

TAG	Description	Factory Setpoint	Setpoint Range and Units	Setpoint Change Control	Notes
WASTE ON/OFF	Turn Wasting ON or OFF	OFF	ON/OFF	Open	
WASTE NOW	Start Wasting Immediately. (This is dependant on the conditions being OK to waste)			Open	
WASTE-HOUR	Time of Day to Start Sludge Wasting	12hr	0-23 hr	Open	
WASTE-TIME	Duration of Sludge Wasting	30m	0-1000m	Open	
SP901-OFF-TIME	Sludge Press OFF Time Delay	5 Min	0-60 Min	Open	Time duration the sludge press operates after feed pump P-901 has turned OFF.
M901-OFF-TIME	Mixer OFF Time Delay	5 Min	0-60 Min	Open	Time duration the mixer operates after feed pump P-901 has turned OFF.
P901-SPEED	P901 VFD Speed Setting	50%	0-100%	Open	
M901-SPEED	M901 VFD Speed Setting	50%	0-100%	Open	
SP901-SPEED	SP901 VFD Speed Setting	50%	0-100%	Open	
M902-MIX-TIME	Mix time for M-902	30 Min	0-60 Min	Open	

© 2019 by newterra, ltd.
All rights reserved. No part of this document may be reproduced or transmitted in any form or by any means, electronic, mechanical, photocopying, recording, or otherwise, without prior written permission of newterra ltd.

newterra ltd.
1291 California Avenue, Brockville, ON K6V 5W3
(800) 420-4056 / www.newterra.com

5.4.4 Logic

Tag / Mode	Description	Control Logic	Output Type	Hour Meter	Amp Meter	HOA Control
SLUDGE ENABLE		SLUDGE SYSTEM ENABLED This must be Enabled for P-0901 to waste sludge. It will be disabled with any of the following alarm conditions: LAHH-0901 VFDA-P901 VFDA-SP901 VFDA-M901 LAHH-0903				
P-901	Waste Activated Sludge Pump	As long as the SLUDGE SYSTEM ENABLED: P-901 will be ON at time of day setting WASTE-HOUR or Operator presses WASTE NOWYC-901 must be active (YC-P901 = Active)P-901 will run for the WASTE TIME (which is settable)P901 will run on VFD with P901-SPEED setpointIf the SLUDGE SYSTEM is DISABLED then the timer will pause, it will resume when the SLUDGE SYSTEM is ENABLED.	Communication	Y	Y	HOA
M-901	Flocculation Tank Mixer	The flocculation tank mixer M-901 will be ON when the transfer pump P-901 is ON. M-901 will be OFF after a timed duration setpoint M901-OFF-TIME after P-901 has turned OFF M901 will run on VFD with M901-SPEED setpoint The mixer will be OFF if any of the following alarms are present: VFDA-M901: Press will be OFF Shutdown Alarms: Press will be OFF	Communication	Y	Y	HOA
SP-901	Volute Sludge Press Shaft Motor	SP-901 will be ON when the Transfer Pump P-901 is ON. SP-901 will be OFF after a a timed duration setpoint SP901-OFF-TIME after P-901 has turned OFF SP901 will run on VFD with SP901-SPEED setpoint The sludge press will be OFF if any of the following alarms are present: VFDA-SP901: Press will be OFF Shutdown Alarms: Press will be OFF	Communication	Y	Y	HOA
SV-0901	Rinse Water Solenoid Valve	Volute spray system operates SV-0901 on a timer that operates at a factory default setting of 10 seconds every hour when SLUDGE SYSTEM ENABLED	Discrete			HOA
M-0902	Polymer Tank Mixer	Polymer Mixer M-0902 is operated by pressing the START-902 button on the HMI. The mixer will run for a timed duration setpoint MIX-TIME-SP.	Discrete			

© 2019 by newterra, ltd.
All rights reserved. No part of this document may be reproduced or transmitted in any form or by any means, electronic, mechanical, photocopying, recording, or otherwise, without prior written permission of newterra ltd.

Tag / Mode	Description	Control Logic	Output Type	Hour Meter	Amp Meter	HOA Control
P-0902	Polymer Metering Pump	The polymer metering pump will be ON when LSLL-0902 is Active & the transfer pump P-901 is ON. The metering pump will be OFF when P-901 turns OFF The metering pump will be OFF if any of the following alarms are present: LALL-0902 : Pump will be OFF Shutdown Alarms: Pump will be OFF	Discrete			HOA
P-0903	Filtrate Discharge Pump	This pump has an integral level switch for level control. Our PLC turns ON/OFF a relay that is in the control circuit for the outletON when YC-P903 is ONOFF when YC-P903 is OFF	Discrete			HOA

5.4.5 Alarms

Alarm	Alarm Description	Actuation Control	Delay	Self Resetting (Y)	Notes
LAHH-0901	Level Alarm High High	LSHH-0901 = Active	5s	Y	Volute Flocculation Tank
LAL-0902	Level Alarm Low	LSL-0902 = InActive	5s	Y	Polymer Mixing Tank
LALL-0902	Level Alarm Low Low	LSLL-0902 = InActive	5s	Y	Polymer Mixing Tank
VFDA-SP901	VFD Fault		Immediate	Y	Volute Sludge Press Shaft
VFDA-M901	VFD Fault		Immediate	Y	Floc Tank Mixer
VFDA-P901	VFD Fault		Immediate	Y	Wasting Pump
M901-OL	M901 Overload	M901-OL = ON	Immediate		
SP901-OL	SP901 Overload	SP901-OL = ON	Immediate		
M902-FLT	Polymer Mixer Fault	M902-FLT = ON	Immediate		Polymer Mixer
LAHH-0903	Level Alarm High High	LSHH-903 = InActive	5s	Y	Filtrate Tank
PAL-7911	Pressure Alarm Low	PSL-7911 = InActive	5s	Y	Alarm indicates possible continuous ventilation failure, indicating risk that the room may become Class 1 Division 2 rated.

© 2019 by newterra, ltd.
All rights reserved. No part of this document may be reproduced or transmitted in any form or by any means, electronic, mechanical, photocopying, recording, or otherwise, without prior written permission of newterra ltd.

5.5 Statistics

This HMI screen provides the pump and motor run times which can be used for preventative maintenance scheduling. It also displays the System run time.

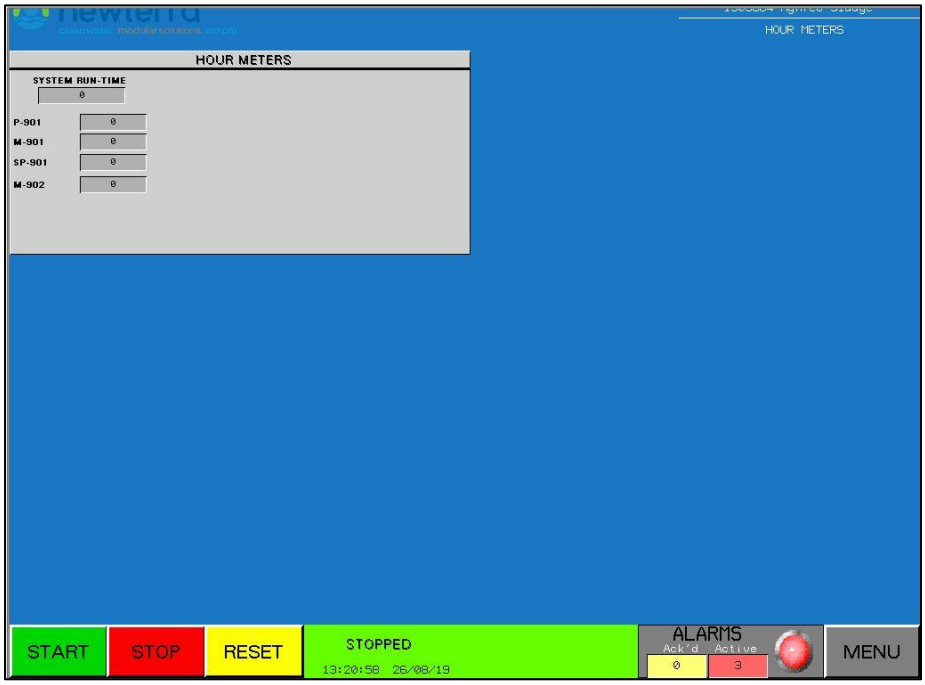

© 2019 by newterra, ltd.
All rights reserved. No part of this document may be reproduced or transmitted in any form or by any means, electronic, mechanical, photocopying, recording, or otherwise, without prior written permission of newterra ltd.

5.6 Data & Time Settings

The PLC date and time can be changed via the **SLUDGE SYSTEM** HMI screen. See below.

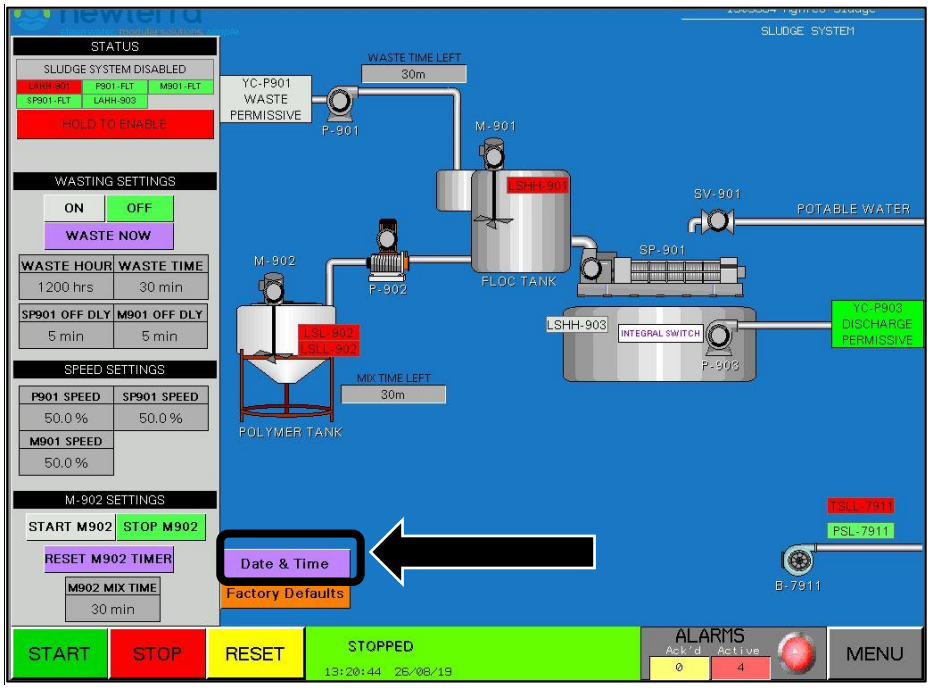

Below is the pop screen for date and time adjustment.

© 2019 by newterra, ltd.
All rights reserved. No part of this document may be reproduced or transmitted in any form or by any means, electronic, mechanical, photocopying, recording, or otherwise, without prior written permission of newterra ltd.

5.7 Factory Default Settings

The Factory Default Setting can be restored via the **SLUDGE SYSTEM** HMI screen. See below. A pop screen will be displayed to the operator for confirmation.

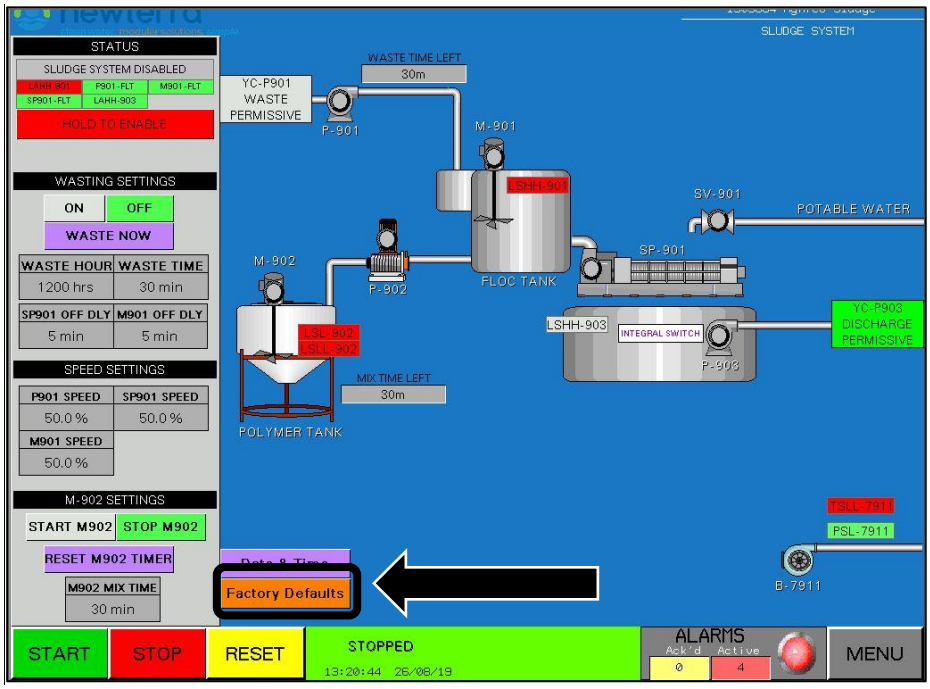

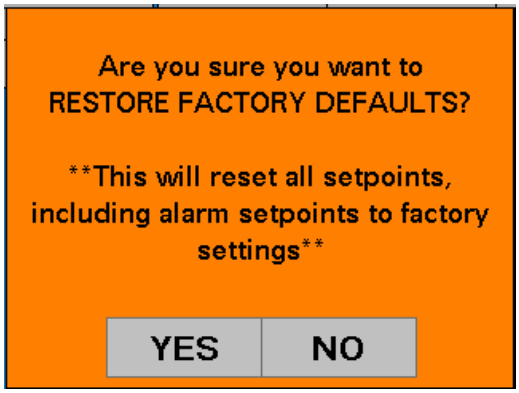

© 2019 by newterra, ltd.
All rights reserved. No part of this document may be reproduced or transmitted in any form or by any means, electronic, mechanical, photocopying, recording, or otherwise, without prior written permission of newterra ltd.

© 2019 by newterra, ltd.
All rights reserved. No part of this document may be reproduced or transmitted in any form or by any means, electronic, mechanical, photocopying, recording, or otherwise, without prior written permission of newterra ltd.

newterra ltd.
1291 California Avenue, Brockville, ON K6V 5W3
(800) 420-4056 / www.newterra.com

6.0 PLANT START-UP, OPERATING GUIDELINES AND MONITORING

6.1 Mechanical & Electrical Start-up Procedure

- If the system is being started for the first time, work your way through the **newterra Commissioning Checklist** presented in **Appendix C** of this O&M Manual.
- If the kill switch on the panel (red mushroom shaped button) is pulled out, then push it in to confirm that the system is off.
- Push the reset button on the operator interface to reset all alarms.
- Make sure there are no obstructions over any moving parts, for example a jacket laying on a belt drive.
- Put all HAND/OFF/AUTO switches to AUTO **(A)** mode.
- Pull the kill Button (red button on panel) out to start the process.
- Push the start button on the Operator Interface.

6.2 Start-up

The Method of Start Operation

Warning
• Please do not operate the machine with side cover open. It may cause injury to the operating person. • Please do not put hands or objects into the mud cake draining exit. It may cause injury or damage the machine. • Please do not put hands or objects into the flocculating and mixing trough when the machine is running. It may cause injury or damage the machine.

© 2019 by newterra, ltd.
All rights reserved. No part of this document may be reproduced or transmitted in any form or by any means, electronic, mechanical, photocopying, recording, or otherwise, without prior written permission of newterra ltd.

newterra ltd.
1291 California Avenue, Brockville, ON K6V 5W3
(800) 420-4056 / www.newterra.com

◆ The examination before start operation

Inspection inner tubing of the machine

① Check whether the connections of inner tubing and external pipelines are loose.

② Open the valve for water supply and check whether the tubing for supplying water leaks.

③ Open the valve for maintenance and check whether the water pipes leaks.

④ Check the valve whether it is on the following state.

Name	State
Ball valve below the flocculating and mixing trough	Off
Maintaining valve	Off

Inspection for other matters

Check whether there are other matters like packing material in the measuring trough or the flocculating and mixing trough.

Inspection after wiring power supply

- Please be sure to inspect and confirm the power supply wiring by professional people in case of electric shock.
- Please screw the external terminals in case of fire.

① Please confirm to cut off the total power supply and the power supply in the electric control cabinet

② Please screw the bolts of terminals in the electric control cabinet

③ Please confirm the operation switch (COS-1) on the electric control cabinet is on STOP state.

④ Please turn on the switch for total power supply.

⑤ Please check the voltage of terminal which receives electric power on the electric control cabinet by universal meter and check whether it accords with the appointed voltage.

⑥ Please turn on the total power supply on the electric control cabinet (ELCB-1)

⑦ Please check whether the indicator light of the electrical cabinet is on.

⑧ Please turn on the operation power (MCCB-C)、the duct pilot power (CP-1)、the power for spray (CP-2) in the electrical cabinet.

© 2019 by newterra, ltd.
All rights reserved. No part of this document may be reproduced or transmitted in any form or by any means, electronic, mechanical, photocopying, recording, or otherwise, without prior written permission of newterra ltd.

newterra ltd.
1291 California Avenue, Brockville, ON K6V 5W3
(800) 420-4056 / www.newterra.com

Check rotation direction of the motor

Warning
• Please connect and check the electric wire by professional people in case of electric shock.

① Please be sure to check whether the wiring for electric supply phase is correct after wiring.

② Please cut off all the operation selector switches (CSL) in the electrical cabinet.

③ Please turn the operation model switch (COS-1) in the electrical cabinet to manual.

④ Please turn the operation switch of screw shafts and blender for flocculating and mixing trough to state ON and check rotation direction of every motor. The correct rotation direction of every motor is as follows:

Screw shafts: counter clockwise rotation seen from the back to the front of the mud-cake exit.

Blender for flocculating and mixing trough: clockwise rotation seen from up to down.

⑤ If motor reverse, please connect the first phase and the third phase reversely. Please be sure to cut off the total power and the electrical cabinet power firstly.

© 2019 by newterra, ltd.
All rights reserved. No part of this document may be reproduced or transmitted in any form or by any means, electronic, mechanical, photocopying, recording, or otherwise, without prior written permission of newterra ltd.

newterra ltd.
1291 California Avenue, Brockville, ON K6V 5W3
(800) 420-4056 / www.newterra.com

◆ Operation setting

The sludge input quantity setting for the sludge delivery pump

Please set appropriate sludge input quantity according to the capacity of the machine.

In addition, the reaction time of polymerized iron is about 3 minutes which should be taken into consideration when setting the time.

Example of setting sludge delivery pump: MYDL-132(Surplus sludge disposing capacity: 12kg-DS/h sludge density: 10000mg/L)
(conversion of sludge density: 10000mg/L=10000g/m³=10kg/m³=10g/L)

Sludge disposing capacity of MYDL-132 :

12kg-DS/h	÷	10kg/m³	÷	60min/h	×	1000 Lm³	=	20 L/min
Dried sludge quantity		Sludge density		Unit conversion		Unit conversion		Sludge-disposing capacity

Adding quantity setting of dosing pump for polymeric flocculant

Please set adding quantity of polymeric flocculant according to the disposing capacity and density of sludge

Adding rate of pulverous flocculant is 0.6%. Adding quantity of polymeric flocculant 1000 times diluted per minute:

18kg-DS/h	×	0.6%	÷	1/1000	÷	1kg/L	÷	60min/h	= 1.8L/min
Quantity of dried sludge		Adding rate		Diluting times		Density		Unit conversion	Adding quantity per minute

→The calculation results for the performance curve of pump and set corresponding adding quantity by regulating graduated circle. Please regulate the graduated circle when the pump is running.

Set extending running time of screw shafts (TLR-2)

During the automatically operation, the machine will stop unless it meets its requirements, and it will release the inner pressure of its main body through extending running time of screw shaft set by timer.

Please set for about 5 minutes.

Initial parameters setting when leaving factory	5 minutes

© 2019 by newterra, ltd.
All rights reserved. No part of this document may be reproduced or transmitted in any form or by any means, electronic, mechanical, photocopying, recording, or otherwise, without prior written permission of newterra ltd.

newterra ltd.
1291 California Avenue, Brockville, ON K6V 5W3
(800) 420-4056 / www.newterra.com

Set spray operation time (TLR-3)

「Stop time（OFF）」and 「running time（ON）」 of spray for cleaning can be set alone.

Stop time can be set by the green rotary button and running time can be set by the red rotary button.

Please set about 15 minutes for stop/ 25 seconds for running.

※Please do not set running time less than 20 seconds to prevent machine malfunction.

The spray electromagnetic valve used in machine adopts the saving mode of storage electricity restored.

When the machine runs initially or runs again after stopping working for a long time (more than 5 days), as charging voltage of capacitance decreases, it will takes about 30 seconds to start up.

	Stopping	Running
Initial parameters setting when leaving factory	15 minutes	25 seconds

Set rotary speed of screw shafts (INV-1)

Regulate the rotary speed of screw shafts by frequency changer and confirm the state of dewatered mud-cake.

The frequency changer can be regulated in the range of 20～120Hz.

※Please do not regulate frequency changer unless the machine malfunctions in daily or regular inspection after finishing debugging.

Initial parameters setting when leaving factory	50HZ

Set rotary speed of blender of the flocculating and mixing trough (INV-2)

Regulate the rotary speed of the blender by frequency changer and confirm the state of formative flocs.

The frequency changer can be regulated in the range of 20～120Hz

※Please do not regulate frequency changer unless the machine malfunctions in daily or regular inspection after finishing debugging.

Initial parameters setting when leaving factory	50HZ

© 2019 by newterra, ltd.
All rights reserved. No part of this document may be reproduced or transmitted in any form or by any means, electronic, mechanical, photocopying, recording, or otherwise, without prior written permission of newterra ltd.

newterra ltd.
1291 California Avenue, Brockville, ON K6V 5W3
(800) 420-4056 / www.newterra.com

◆ Formal operation

Please confirm the installation position of the machine and switch when processing formal operation

① Check whether there is polymeric flocculant in the chemical feeder, the chemical feeder runs normally and the chemical feeder cooperate with the dewaterer well.

② Turn off all the operation selector switches (CSL) on the electric control cabinet.

③ Turn the operation mode switch (COS1) to manual mode on the electrical cabinet and turn on the corresponding operation selector switch (CSL), and then check whether it is normal to input sludge and add polymeric flocculant.

④ Turn off the operation selector switch (CSL) on the electrical cabinet.

⑤ Check whether the switch of 24 hours timer on the electrical cabinet is on automatic state and turn the operation mode switch (COS-1) to automatic state to make the machine run automatically.

⑥ Please regulate the pipe for adjusting liquid level or pipe for inputting sludge to set input sludge quantity.

⑦ Please regulate the dosing pump to set adding quantity of the polymeric flocculant.

⑧ Check whether the flocs formed are perfect after the polymeric flocculant reacting with sludge in the flocculating and mixing trough. The ideal diameter of flocs is from5mm to 10mm. If the formed flocs are not perfect, it may be

© 2019 by newterra, ltd.
All rights reserved. No part of this document may be reproduced or transmitted in any form or by any means, electronic, mechanical, photocopying, recording, or otherwise, without prior written permission of newterra ltd.

newterra ltd.
1291 California Avenue, Brockville, ON K6V 5W3
(800) 420-4056 / www.newterra.com

caused by unsuitable rotary speed of blender which can be regulated by frequency changer (INV-2).

<Example of perfect formed flocs>

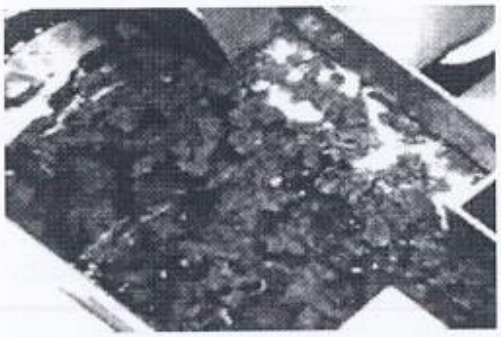

⑨ The flocs flow into the volute body and form mud-cakes which are discharged from the exit by series of disposal. The inner pressure in the volute body becomes larger along with sludge flow and it will take a period of time to form mud-cakes. (About 60 minutes)

© 2019 by newterra, ltd.
All rights reserved. No part of this document may be reproduced or transmitted in any form or by any means, electronic, mechanical, photocopying, recording, or otherwise, without prior written permission of newterra ltd.

newterra ltd.
1291 California Avenue, Brockville, ON K6V 5W3
(800) 420-4056 / www.newterra.com

Operation Adjustment

Warning
• Please do not touch the inner parts of the electrical cabinet with wet hand in case of electric shock. • Please wear insulated shoes when operating in case of electric shock. • Please regulate the frequency changer under the condition of power off in case of electric shock. • Please regulate the backing pressboard under the condition that the machine stops working in case that hands or tools are involved into the machine.

Attention
• Please do not set the gap of backing pressboard less than 4mm. In case that the dewaterer overloads in consequence of excessive pressure in the volute body and service life of vulnerable parts (moveable annular plate · screw shaft) will be shortened.

◆ About operation adjustment

It is unnecessary to do any other regulation except for adding flocculant after finishing regulation for the first time.

Please check the residual quantity of flocculant regularly.

As the sludge shape will change enormously in the instance that the sludge density changes in a wide range (±10 percents upward), please regulate the sludge input quantity, water-content rate and disposing capacity of dewatered mud-cake.

Regulation in the instance of sludge density changing

It will affect the disposing capacity if the sludge density is changing. Please regulate it by the methods as follows.

© 2019 by newterra, ltd.
All rights reserved. No part of this document may be reproduced or transmitted in any form or by any means, electronic, mechanical, photocopying, recording, or otherwise, without prior written permission of newterra ltd.

newterra ltd.
1291 California Avenue, Brockville, ON K6V 5W3
(800) 420-4056 / www.newterra.com

Please accelerate the motor rotary speed of screw shafts and regulate the sludge input quantity by pipe of adjusting liquid level to increase disposing capacity.

Please slow down the motor rotary speed of screw shafts and regulate the sludge input quantity by pipe of adjusting liquid level to decrease disposing capacity.

※If increasing the disposing capacity blindly without regulating the gap of backing pressboard, it will make the sludge accumulated superfluously in the inner volute body. Under this condition, it will cause the motors overload as well as make vulnerable parts like moveable annular plate, screw shaft and other parts frayed soon。

Regulation in the instance of water-content rate increasing

The decrease of sludge density will lead decreasing of solid dosing quantity and increase water-content rate. The decrease of solid dosing quantity will lead decreasing of inner pressure of the volute body and decrease dewatering capacity.

Under this condition, increase sludge input quantity to increase solid dosing quantity.

※In the instance of increasing sludge input quantity, please be sure that the liquid level of the volute body is lower than the liquid level of the flocculating and mixing trough (position H) to confirm dewatering continuity through appropriate adjustment.

※In the instance of increasing sludge input quantity, if sludge density increases, it will be beyond the normal disposing capacity of the volute body, the liquid level of the volute body will be higher than the liquid level of the flocculating and mixing trough (position H) and it will lead the instance as follows, so it is necessary to inspect the sludge density regularly.

Water-content and disposing capacity of dewatered mud-cake are instable.

Sludge quantity provided to the volute body is instable.

Pump stops working in consequence of impurity on the electrodes.

Service life of pumps will be shortened as pumps are in regular intermittent operation state.

© 2019 by newterra, ltd.
All rights reserved. No part of this document may be reproduced or transmitted in any form or by any means, electronic, mechanical, photocopying, recording, or otherwise, without prior written permission of newterra ltd.

newterra ltd.
1291 California Avenue, Brockville, ON K6V 5W3
(800) 420-4056 / www.newterra.com

6.3 Polymer Dosing Sample Calculations

Example: A filter press is to be used to dewater sludge, and a polymer is to be used to flocculate the sludge. The polymer make-up concentration is to be 0.2% (2 g/L) and to be made up using dry polymer with a density of 0.8 g/mL. The polymer make-up tank has a capacity of 300 L. The flocculation tank has a capacity of 900 L. The wasted sludge has an MLSS concentration of 1% (10 g/L). The ratio of polymer to sludge should be 10 g/kg on a dry basis.

1) Determine the amount of dry polymer required to make up a batch of 0.2% polymer solution:

   - Determine mass of dry polymer required

$$m_{DryPolymer} = [Polymer] * V_{PolymerSolution} = (2g/L) * (300L) = 600g$$

   - Determine volume of dry polymer required

$$V_{DryPolymer} = \frac{m_{DryPolymer}}{\rho_{DryPolymer}} = \frac{600g}{0.8g/mL} = 750mL$$

   - Therefore 750 mL of dry polymer, or 3 cups, are required to make-up a batch of 0.2% polymer solution.

2) Determine the dose of polymer solution required to flocculate a batch of sludge:

   - Determine mass of solids to be flocculated on a dry basis

$$m_{DrySolids} = [MLSS] * V_{Sludge} = (10g/L) * (900L) = 9000g = 9kg$$

   - Determine mass of polymer required to flocculate sludge on a dry basis

$$m_{DryPolymer} = Polymer : SolidsRatio * m_{DrySolids} = (10g/kg) * (9kg) = 90g$$

   - Determine volume of polymer solution required to flocculate sludge

$$V_{PolymerSolution} = \frac{m_{DryPolymer}}{[Polymer]} = \frac{90g}{2g/L} = 45L$$

   - Therefore 45 L of 0.2% polymer solution are required per batch to flocculate the 900 L of 1% sludge.

© 2019 by newterra, ltd.
All rights reserved. No part of this document may be reproduced or transmitted in any form or by any means, electronic, mechanical, photocopying, recording, or otherwise, without prior written permission of newterra ltd.

newterra ltd.
1291 California Avenue, Brockville, ON K6V 5W3
(800) 420-4056 / www.newterra.com

6.4 Record Keeping

An essential component of quality control in any facility is sound record keeping. A log book covering the Dewatering System performance should be maintained, updated, and readily accessible to all operators. The log book should be used to record observations, set point alterations, and unusual conditions.

For each wet chemistry parameter analysis, a separate work-sheet must be prepared. Work-sheet data for at least the previous year should be kept for possible consultation.

The second step in quality control is to train all operators to follow an established procedure for each test. Identical samples should be periodically tested for any parameter by different operators, and the variability among results should be compared. Consistent variability in results may lead to the technique improvement of operators.

Duplicate analysis of a sample should also regularly be done. And, split samples should regularly be sent to an outside accredited laboratory and analysis results should be compared with those done in-house.

In addition to summary sheets, it is highly recommended that data be entered on Excel spread-sheets. Spread-sheets greatly aid in the data presentation and manipulation and would be of immeasurable value when report writing is required.

© 2019 by newterra, ltd.
All rights reserved. No part of this document may be reproduced or transmitted in any form or by any means, electronic, mechanical, photocopying, recording, or otherwise, without prior written permission of newterra ltd.

newterra ltd.
1291 California Avenue, Brockville, ON K6V 5W3
(800) 420-4056 / www.newterra.com

© 2019 by newterra, ltd.
All rights reserved. No part of this document may be reproduced or transmitted in any form or by any means, electronic, mechanical, photocopying, recording, or otherwise, without prior written permission of newterra ltd.

newterra ltd.
1291 California Avenue, Brockville, ON K6V 5W3
(800) 420-4056 / www.newterra.com

7.0 SYSTEM MAINTENANCE

7.1 General

CAUTION: Shut off all electrical power before working on the mechanical or electrical equipment.

The system should be routinely checked for any signs of operational problems. Such problems could include, but are not necessarily limited to, abnormally high peak flows, unpleasant odour, and diffuser clogging, and so on.

© 2019 by newterra, ltd.
All rights reserved. No part of this document may be reproduced or transmitted in any form or by any means, electronic, mechanical, photocopying, recording, or otherwise, without prior written permission of newterra ltd.

newterra ltd.
1291 California Avenue, Brockville, ON K6V 5W3
(800) 420-4056 / www.newterra.com

7.2 Schedule for Routine Operation and Maintenance Checkups

Item	Description	Day	Week	Month	Quarter	Year	Comments
1	**Perform plant visual check – interior and exterior**	X					
2	**Emergency Eye Wash Station** -Inspect eyewash weekly for inadequate water level. Inspections which give evidence of any particulation or discoloration suggest the water be replaced immediately. -Water should be drained and replaced with fresh water and one bottle of bacteriostatic additive (p/n G1540BA) at least once every six months.		X			½	In accordance with vendor manual in Appendix E Semi-annually
3	**B-7911 – Blower** -Inspect all blower and foundation hardware to make it is tight. Repair as required. -Check vibration readings and compare to previous readings. If any major differences are present, the cause should be determined and corrected before the blower is put back into operation. -Inspect dampers for any damages and operation. Repair as required.		X X X				In accordance with vendor manual in Appendix E
4	**H-7911/12 – Heaters** -Once a year, remove the dust accumulation inside the heater using a vacuum cleaner or compressed air. Cleaning should be done while the heater is disconnected from the supply circuit**.**					X	In accordance with vendor manual in Appendix E

© 2019 by newterra, ltd.
All rights reserved. No part of this document may be reproduced or transmitted in any form or by any means, electronic, mechanical, photocopying, recording, or otherwise, without prior written permission of newterra ltd.

newterra ltd.
1291 California Avenue, Brockville, ON K6V 5W3
(800) 420-4056 / www.newterra.com

Item	Description	Day	Week	Month	Quarter	Year	Comments
5	**PSL-7911 – Low Pressure Switch** -Confirm Operation. Adjust as required.		**X**				In accordance with vendor manual in Appendix E
6	**P-0901 – Moyno Pump** -Confirm Pump Operation. -Repair leaks as required -Clean interior of motor using compressed air or vacuum. -Clean motor exterior		**X**				In accordance with vendor manual in Appendix E
7	**SP-0901 – Volute** See Section 7.2.1 for inspection details -Replace Moveable annular plate after 10000 hours operation -Replace Screw shaft after 30000 hours operation						In accordance with vendor manual in Appendix E
8	**P-0903 – Pump** -Confirm operation -Repair as required		**X**				In accordance with vendor manual in Appendix E

© 2019 by newterra, ltd.
All rights reserved. No part of this document may be reproduced or transmitted in any form or by any means, electronic, mechanical, photocopying, recording, or otherwise, without prior written permission of newterra ltd.

<table>
<tr><th>Item</th><th>Description</th><th>Day</th><th>Week</th><th>Month</th><th>Quarter</th><th>Year</th><th>Comments</th></tr>
<tr><td>9</td><td>P-0902 – Polymer Dosing Pump

-Check, if liquid leaks from the drain opening and if the drain opening is blocked or soiled. If so, follow the instructions given in OEM Manual for Diaphragm breakage.
-Check, if liquid leaks from the dosing head or valves. If necessary, tighten dosing head screws with a torque wrench at 6 Nm (+1). If necessary, tighten valves and cap nuts, or perform service.
-Check, if a service requirement is present at the pump display. If so, follow the instructions given in OEM Manual.
-Clean all pump surfaces with a dry and clean cloth
-Check dosing head screws.
If necessary, tighten dosing head screws with a torque wrench at 6 Nm (+1). Replace damaged screws immediately.

According to the motor runtime or after a defined period of operation, service requirements will appear. Service requirements appear regardless of the current operational state of the pump and do not affect the dosing process.

<table><tr><th>Service requirement</th><th>Motor runtime [h]*</th><th>Time interval [months]*</th></tr><tr><td>'Service soon'</td><td>7500</td><td>23</td></tr><tr><td>'Service now'</td><td>8000</td><td>24</td></tr></table></td><td>X

X

X</td><td>X</td><td></td><td>X</td><td>2</td><td>In accordance with vendor manual in Appendix E.

 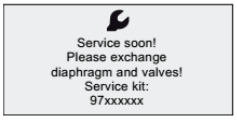

Fig. 38 'Service soon'

 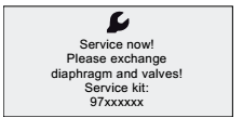

Fig. 39 'Service now'

-The service requirement signals when the replacement of wearing parts is due and displays the number of the service kit.</td></tr>
<tr><td>10</td><td>Inspect and maintain valves & fittings for leaks.</td><td></td><td>X</td><td></td><td></td><td></td><td></td></tr>
</table>

© 2019 by newterra, ltd.
All rights reserved. No part of this document may be reproduced or transmitted in any form or by any means, electronic, mechanical, photocopying, recording, or otherwise, without prior written permission of newterra ltd.

newterra ltd.
1291 California Avenue, Brockville, ON K6V 5W3
(800) 420-4056 / www.newterra.com

Item	Description	Day	Week	Month	Quarter	Year	Comments
11	**Level Switches – LSHH/LSH/LSL/ LSLL** -Inspect and confirm operation					**X**	
12	**Inspect and clean as necessary, electrical panel filters.**				**X**		
13	**Check electrical leads**				**X**		
14	**Inspect and maintain breakers, fuses and resets**			**X**			
15	**Check motor mounting bolts**			**X**			
16	**Clean dust away from electric motor**			**X**			
17	**Check PLC and control panel functionality**		**X**				
18	**Panel Filter** -Check panel fan filter and clean/replace as required.			**X**			
19	**Inspect container and check for leaks and paint touch ups. Repair as required.**				**X**		

All connections (hoses, hose clamps, camlocks) have to be checked periodically (on a monthly basis) to make sure all of them are in good condition with no leaks.

© 2019 by newterra, ltd.
All rights reserved. No part of this document may be reproduced or transmitted in any form or by any means, electronic, mechanical, photocopying, recording, or otherwise, without prior written permission of newterra ltd.

7.2.1 Volute Inspection and Maintenance (SP-901)

Maintenance and Inspection

Warning
• Please be sure to cut off the electricity supply when cleaning the volute body. In case of being involved into machine and causing injury to the people.

Attention
• Please be sure to evacuate the sludge in the volute body in the instance that the machine stops working for one week or more (2-3 days for easily dried sludge). • If the machine stops working for one week or more (2-3 days for easily dried sludge) with the sludge in the volute body, the dried sludge will cause damage to the machine when the machine runs again.

Inspection and dealing with exceptional condition

There are forms for daily inspection and regular inspection in the instruction. Please use it rationally.

In addition, please refer to the operation instruction of each equipment when inspecting the motors、pumps、frequency changers or dealing with exceptional condition of these equipment.

Daily inspection items

Inspection parts	Inspection items	Inspection
Motor	Whether runs normally or not	☐
	Whether there is exceptional noise or not	☐
	Whether there is shock or not	☐
Backing	Whether the gap set is appropriate	☐

40

© 2019 by newterra, ltd.
All rights reserved. No part of this document may be reproduced or transmitted in any form or by any means, electronic, mechanical, photocopying, recording, or otherwise, without prior written permission of newterra ltd.

newterra ltd.
1291 California Avenue, Brockville, ON K6V 5W3
(800) 420-4056 / www.newterra.com

pressboard	Whether the changing range of water-content rate of dewatered mud-cake is too large	☐
The volute body	Whether solid-content of filtrate is normal	☐
Measuring trough	Whether there is sludge accumulated around the pipe for back flow and the weir	☐
Flocculating and mixing trough	Whether there is sludge accumulated around return pipe and electrode	☐
	Whether it forms appropriate flocs	☐

Regular inspection items

Inspection parts	Inspection items	Inspection
The electrical cabinet	Whether each kind of indicating lamp shines normally	☐
Motor	Whether the motor heats abnormally	☐
	Whether the machine leaks oil	☐
	Whether the electric current is approximate to the normal current	☐
Timer	Whether the machine runs according to the set time	☐
Frequency changer	Whether the machine runs according to the set frequency	☐
	Whether the frequency changer heats abnormally	☐
	Whether display screen and LED shines normally.	☐
The volute body	Whether the moveable annular plates are moving	☐
	Whether there is a great deal of filtrate leaking from the gap between the plates	☐

41

© 2019 by newterra, ltd.
All rights reserved. No part of this document may be reproduced or transmitted in any form or by any means, electronic, mechanical, photocopying, recording, or otherwise, without prior written permission of newterra ltd.

newterra ltd.
1291 California Avenue, Brockville, ON K6V 5W3
(800) 420-4056 / www.newterra.com

Electromagnetic valve	Whether the electromagnetic valves are working	☐
	Whether the electromagnetic valves can switch on and off normally	☐
	Whether the electromagnetic valves leak	☐
Measurable trough	Whether the sludge input quantity changes	☐
Bolts · Screw caps	Whether bolts and screw caps become flexible	☐
Pipe · Valve	Whether pipe and valves become flexible	☐
	Whether the pipe and valves crack and mangle	☐

Dealing with exceptional conditions

Exceptional parts	Exceptional contents	Possible reason	countermeasures
The electrical cabinet	The lamps do not shine	Operation time of lamps exceeds their service life	Replacing lamps
Motor	Do not move	Overload	Contacting our company or agents
		Motor itself fault	Replacing motor
		Poor contact	Checking the circuit
	Abnormally heats	Overload	Reducing load
		Motor fault	Replacing motor
		The voltage is extremely high (low)	Inspecting voltage
	Exceptional noise	Motor fault	Replacing motor

© 2019 by newterra, ltd.
All rights reserved. No part of this document may be reproduced or transmitted in any form or by any means, electronic, mechanical, photocopying, recording, or otherwise, without prior written permission of newterra ltd.

newterra ltd.
1291 California Avenue, Brockville, ON K6V 5W3
(800) 420-4056 / www.newterra.com

		Impurity interfused into impeller	Cleaning up the impurity or replacing the motor
	Shocking	Bolts are loose	Screwing up the bolts
		Motor fault	Replacing motor
	Leaking oil	Motor fault	Replacing motor
Timer	Do not move	Poor contact	Checking the circuit
	The machine does not work according to the set time	Timer fault	Replacing timer
Frequency changer	The machine does not work according to the set frequency	Setting method fault	Please refer to instruction of frequency changer
	Abnormally heats	It is too frequent to start and stop	Please refer to instruction of frequency changer
		The voltage is extremely high (low)	Please refer to instruction of frequency changer
	Shocking	Set screws are loose	Screwing them up
		Frequency changer fault	Replacing frequency changer
	Display screen and LED do not shine	Poor contact	Checking the circuit
		Frequency changer fault	Replacing frequency changer
Backing pressboard	The gap of the backing pressboard	Set screws of the backing	Screwing up the bolts after regulating to an

43

© 2019 by newterra, ltd.
All rights reserved. No part of this document may be reproduced or transmitted in any form or by any means, electronic, mechanical, photocopying, recording, or otherwise, without prior written permission of newterra ltd.

newterra ltd.
1291 California Avenue, Brockville, ON K6V 5W3
(800) 420-4056 / www.newterra.com

	is not appropriate	pressboard are loose	appropriate gap
	The changing range of water-content rate of dewatered mud-cake is too large	Character of sludge changes	Please refer to the operation instruction
The volute body	The moveable annular plates do not move	The moveable annular plates are frayed	Contacting our company or agents
	There is large numbers of sludge leaking from the gap between the plates	The formed flocs are not appropriate	Please refer to the instruction
		Sludge input quantity is too much	Decreasing the sludge input quantity by regulating the pipe for adjusting the liquid level
		The rotary speed of screw shaft is too slow	Accelerating the rotary speed of screw shaft
	Solid-content rate of filtrate is too high	The formed flocs are not appropriate	Please refer to the instruction
		Sludge input quantity is too much	Decreasing the sludge input quantity by regulating the pipe for adjusting the liquid

© 2019 by newterra, ltd.
All rights reserved. No part of this document may be reproduced or transmitted in any form or by any means, electronic, mechanical, photocopying, recording, or otherwise, without prior written permission of newterra ltd.

newterra ltd.
1291 California Avenue, Brockville, ON K6V 5W3
(800) 420-4056 / www.newterra.com

			level
		The rotary speed of screw shaft is too slow	Accelerating the rotary speed of screw shaft
Electromagnetic valve	Do not move	Bad wiring	Checking the circuit
		Impurity interfused	Cleaning up the impurity
		Valve closes	Opening access
	Cannot turn on or off completely	Impurity interfused	Cleaning up the impurity
		Electromagnetic valve fault	Replacing electromagnetic valve
	Leaking water	Impurity interfused	Cleaning up the impurity
Measuring trough	There is sludge accumulated around the pipe for back flow and the weir	--	Cleaning up the accumulated sludge
Flocculating and mixing trough	There is sludge accumulated on the advection pipe or electrode	--	Cleaning up the accumulated sludge
Bolts and screw caps	Loose	--	Screw up
Tubing and valves	Loose	--	Screw up
	The pipe and valves crack and mangle	--	Replace the cracking or mangling parts

© 2019 by newterra, ltd.
All rights reserved. No part of this document may be reproduced or transmitted in any form or by any means, electronic, mechanical, photocopying, recording, or otherwise, without prior written permission of newterra ltd.

newterra ltd.
1291 California Avenue, Brockville, ON K6V 5W3
(800) 420-4056 / www.newterra.com

7.3 Trouble Shooting

7.3.1 B-7911 – Trouble Shooting

VII. TROUBLESHOOTING

⚠ DANGER

Troubleshooting should only be performed by trained personnel. Any potential electrical problems should only be checked by a licensed electrician. All safety rules, regulations and procedures MUST be followed. Failure to follow proper procedures can cause property damage, severe bodily injury and death.

Potential problems and causes listed below are in no order of importance or priority. The causes are only a list of the most common items to check to correct a problem. If you find the cause of a problem, **DO NOT** assume it is the **ONLY** cause of that problem. Different problems can have the same causes.

PROBLEM	CAUSE
Excessive Vibration	1. Loose mounting bolts, wheel set screws, taper-lock hubs. 2. Worn or corroded blower wheel. 3. Accumulation of foreign material on blower wheel. 4. Bent motor shaft. 5. Worn motor bearings. 6. Motor out of balance. 7. Inadequate structural support. 8. Support structure not sufficiently cross braced. 9. Weak or resonant foundation. 10. Foundation not flat and level.
Airflow (CFM) Too Low	1. Blower wheel turning in wrong direction (**rotation**). 2. Actual system static pressure (**SP**) is higher than expected. 3. Motor speed (**RPM**) too low. 4. Dampers or valves not adjusted properly. 5. Leaks or obstructions in duct work. 6. Filters dirty. 7. Inlet and/or discharge guards are clogged. 8. Duct elbow too close to blower inlet and/or discharge. 9. Improperly designed duct work 10. Blower wheel not properly located relative to the inlet bell (**LM** Model only).
Airflow (CFM) Too High	1. Actual system static pressure (**SP**) is lower than expected. 2. Motor speed (**RPM**) too high. 3. Filter not in place. 4. Dampers or valves not adjusted properly.

© 2019 by newterra, ltd.
All rights reserved. No part of this document may be reproduced or transmitted in any form or by any means, electronic, mechanical, photocopying, recording, or otherwise, without prior written permission of newterra ltd.

newterra ltd.
1291 California Avenue, Brockville, ON K6V 5W3
(800) 420-4056 / www.newterra.com

PROBLEM	CAUSE
Motor Overheating	**NOTE: A normal motor will operate at 174°F. See B-8 on page 6.** 1. Actual system static pressure **(SP)** is lower than expected. 2. Voltage supplied to motor is too high or too low. 3. Motor speed (**RPM**) too high or defective motor. 4. Air density higher than expected. 5. Motor wired incorrectly or loose wiring connections. 6. Cooling fan cover on back of motor is clogged. (Fan cooled motors only.)
Excessive Noise	1. Wheel rubbing inside of housing. 2. Worn or corroded blower wheel. 3. Accumulation of foreign material on blower wheel. 4. Loose mounting bolts, wheel set screws, or taper-lock hubs. 5. Bent motor shaft. 6. Worn motor bearings. 7. Motor out of balance. 8. Motor bearings need lubrication. 9. Vibration originating elsewhere in system. 10. System resonance or pulsation. 11. Inadequate or faulty design of blower support structure. 12. Blower operating near "stall" condition due to incorrect system design or installation.
Fan Doesn't Operate	1. Motor wired incorrectly. 2. Incorrect voltage supply. 3. Defective fuses or circuit breakers. 4. Power turned off elsewhere. 5. Motor wired incorrectly or loose wiring connections. 6. Defective motor.

7.3.2 Backflow Preventer - Trouble Shooting

Troubleshooting Guide — Series 007 and LF007

Symptom	Cause	Solution
1. Check valve fails to hold 1.0 PSID minimum	a. Debris on check disc sealing surface	Disassemble and clean
	b. Leaking gate valve	Disassemble and clean or repair
	c. Damaged seat disc or seat o-ring	Disassemble and replace
	d. Damaged guide holding check open	Disassemble and clean or replace
	e. Weak or broken spring	Disassemble and replace spring
2. Chatter during flow conditions	a. Worn, damaged or defective guide	Disassemble and repair or replace guide
3. Low flows passing through mainline valve	a. Mainline check fouled	Disassemble and clean
	b. Meter strainer plugged	Disassemble and clean
	c. Damaged mainline seat disc or seat	Disassemble and replace
	d. Broken mainline spring	Disassemble and replace

© 2019 by newterra, ltd.
All rights reserved. No part of this document may be reproduced or transmitted in any form or by any means, electronic, mechanical, photocopying, recording, or otherwise, without prior written permission of newterra ltd.

newterra ltd.
1291 California Avenue, Brockville, ON K6V 5W3
(800) 420-4056 / www.newterra.com

7.3.3 P-0901 – Moyno Pump – Trouble Shooting

TROUBLESHOOTING

WARNING: Before making adjustments, disconnect power source and thoroughly bleed pressure from system prior to disassembly. Failure to do so could lead to electric shock or serious bodily harm.

Failure To Pump.

1. Motor will not start: Check power supply. Voltage must be ± 10% of nameplate rating when motor is in locked rotor condition. Check for faulty capacitor on 1 phase Models.
2. Motor runs and thermally kicks out: Check for excessive discharge pressure. Check for defective centrifugal switch on 1 phase Models. Increase ventilation to motor. Do not use less than #14 wire size.
3. Stator torn; possible excessive pressure: Replace stator, check pressure at discharge port.
4. Flexible joint broken; possible excessive pressure:

   Replace joint, check pressure at discharge port.
5. Wrong rotation (3 phase only): Rotation must be clockwise when facing pump from motor end. Reverse the connections of any two line leads to the motor.
6. Excessive suction lift or vacuum.

Pump Overloads.

1. Excessive discharge pressure: Check pressure at discharge port for maximum ratings given in Table 1.
2. Fluid viscosity too high: Limit fluid viscosity to 100 CP or 500 SSU.

Noisy Operation.

1. Excessive suction lift or vacuum: Maximum suction lift is 25 feet for water.
2. Suction line too small: Check pipe size. Be sure lines are free from obstructions.
3. Pump Cavitates: Pump speed is 1725 rpm. Viscosity of fluid should not exceed 100 CP or 500 SSU.
4. Flexible joint worn: Replace joint. Check pressure at discharge port.
5. Insufficient mounting: Mount to be secure to a firm base. Vibration induced noise can be reduced by using mount pads and short sections of hose on suction and discharge ports.

Seal Leakage.

1. Leakage at startup: If leakage is slight, allow pump to run several hours to let faces run in.
2. Persistent seal leakage: Faces may be cracked from freezing or thermal shock. Replace seal.

Pump Will Not Prime.

1. Air leak on suction side: Check pipe connections.

© 2019 by newterra, ltd.
All rights reserved. No part of this document may be reproduced or transmitted in any form or by any means, electronic, mechanical, photocopying, recording, or otherwise, without prior written permission of newterra ltd.

newterra ltd.
1291 California Avenue, Brockville, ON K6V 5W3
(800) 420-4056 / www.newterra.com

7.3.4 P-0901 – Motor – Trouble Shooting

6. FAULT FINDING AND RECOGNITION

Kinds of Breakdown	Symptoms	Possible Causes	Remedies
Fail to start without load	Motionless and soundless	Power-off	Consult power company
		Switch-off	Switch-on
		No fuse	Install fuse
		Broken wiring	Check wiring and repair
		Broken lead	Check wiring and repair
		Broken windings	Check windings and repair
	Fuse blowing. (Automatic switch trips off, slow start with electromagnetic noise)	Short circuit of circuit switches	Check circuit switches and replace
		Incorrect wiring	Check wiring according to nameplate
		Poor contact at terminal	Lock tightly
		Windings grounded	Factory repair
		Broken windings	Factory repair
		Poor contact of circuit switches	Check and repair
		Broken wiring	Check and repair
		Poor contact of starting switches	Check and repair
		Short circuit of starting switches	Check and repair
		Incorrect connections of starting switches	Connect according to nameplate
Loading after start	Fuse blowing. Fail to restart due to trip-off of automatic switch	Insufficient capacity of fuse	Replace fuse if wiring permits
		Overload	Lighten load
		High load at low voltage	Check circuit capacity and reduce load
	Overheating motor	Overload or intermittent overload	Lighten load
		Under-voltage	Check circuit capacity and power source
		Over-voltage	Check power source
		Ventilation duct clogged	Remove the foreign matter in the duct
		Ambient temperature exceeds 40°C	Correct insulation class to B or F, or lower ambient temperature
		Friction between rotor and stator	Factory repair
		Fuse blown (Single-phase rotating)	Install the specified fuse
		Poor contact of circuit switches	Check and repair
		Poor contact of circuit starting switches	Check and repair
		Unbalance three-phase voltage	Check circuit or consult power company

© 2019 by newterra, ltd.
All rights reserved. No part of this document may be reproduced or transmitted in any form or by any means, electronic, mechanical, photocopying, recording, or otherwise, without prior written permission of newterra ltd.

newterra ltd.
1291 California Avenue, Brockville, ON K6V 5W3
(800) 420-4056 / www.newterra.com

Kinds of Breakdown	Symptoms	Possible Causes	Remedies
Loading after start	Speed falls sharply	Voltage drop	Check circuit and powers source
		Sudden overload	Check machine
		Single-phase rotating	Check circuit and repair
	Switch overheat	Insufficient capacity of switch	Replace switch
		High load	Lighten load
	Bearing over-heating	High belt tension	Adjust belt tension
		Slack belt tension	Adjust belt tension
		Misalignment between motor and machine shafts	Re-align
		Over speed of bearing outer-ring	Adjust bracket
		High bearing noise	Replace the damaged bearing
Noise	Electromagnetic noise induced by electricity	Occurrence from its first operation	May be normal
		Sudden sharp noise and smoking	Short circuit of windings should be repaired at the factory
	Bearing noise	Noise of low shishi or Thru-Thru	May be normal
		Kala-Kala as a result of poor lubrication	Grease
		Kulo-Kulo as a result of poor lubrication	Clean bearing and grease
		Sa-Sa or larger noise	Replace the damaged bearing
	Mechanical noise caused by machinery	Loose belt sheave	Adjust key and lock the screw
		Loose coupling or skip	Adjust the position of couplings, lock key and screw
		Loose screw on fan cover	Lock fan cover screw tightly
		Fan rubbing	Adjust fan position
		Rubbing as a result of ingression of foreign matter	Clean motor interior and ventilation ducts
		Wind noise	Noise induced by air flowing through ventilation ducts
		Induced by conveyance machine	Repair machine
Vibration	Electromagnetic vibration	Short circuit of winding	Factory repair
		Open circuit of rotor	Factory repair
	Mechanical vibration	Unbalanced rotor	Factory repair
		Unbalanced fan	Factory repair
		Broken fan blade	Replace fan
		Unsymmetric centers between belt sheaves	Align central points
		Central points of couplings do not lie on the same level	Adjust the central points of couplings to the same level
		Improper mounting installation	Lock the mounting screws
		Motor mounting bed is not strong enough	Reinforce mounting bed

Remarks:
(1) Circuit switches: These include knife switches, electromagnetic switches, fuse and other connection switches etc.
(2) Starting switches: These include Delta-Star starters, compensate starters, reactance starters, resistor starters, starting controller's etc.

© 2019 by newterra, ltd.
All rights reserved. No part of this document may be reproduced or transmitted in any form or by any means, electronic, mechanical, photocopying, recording, or otherwise, without prior written permission of newterra ltd.

newterra ltd.
1291 California Avenue, Brockville, ON K6V 5W3
(800) 420-4056 / www.newterra.com

7.3.5 P-0902 – Polymer Doing Pump - Trouble Shooting

9. Faults

In the event of faults, a warning or an alarm is triggered. The corresponding fault symbol flashes in the "Operation" menu, see section *9.1 List of faults*. The cursor jumps to the "Alarm" main menu symbol.

Some alarms are automatically acknowledged by opening the "Alarm" main menu, which can cause the pump to start.

CAUTION

Automatic startup

Minor or moderate personal injury

- Before entering the "Alarm" main menu, make sure the pump is in operating state "Stop".

Press the click wheel to open the "Alarm" main menu.

A yellow display indicates a warning and the pump continues running.

A red display indicates an alarm and the pump stops dosing. For some alarms the pump tries to restart periodically. When the cause of the alarm has been remedied, the pump starts automatically and switches back to normal operation.

CAUTION

Automatic startup

Minor or moderate personal injury

- Before remedying the cause of the fault, make sure the pump is ready to be started.

Before starting work on the pump, the pump must be in the "Stop" operating state or be disconnected from the power supply. The system must be pressureless.

The last 10 faults are stored in the "Alarm" main menu. When a new fault occurs, the oldest fault is deleted.

The two most recent faults are shown in the display, you can scroll through all the other faults. The time and cause of the fault are displayed.

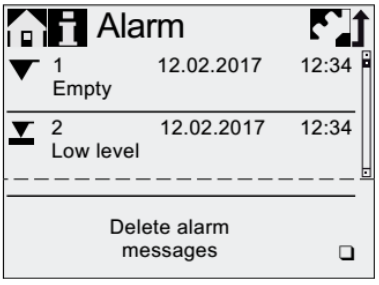

TM06 7072 2916

The list of faults can be deleted at the end of the list.

If there is a service requirement, this appears when the "Alarm" menu is opened. Press the click wheel to temporarily close the service prompt. See section *8.3 Service system*.

© 2019 by newterra, ltd.
All rights reserved. No part of this document may be reproduced or transmitted in any form or by any means, electronic, mechanical, photocopying, recording, or otherwise, without prior written permission of newterra ltd.

9.1 List of faults

9.1.1 Faults with error message

Display in the "Alarm" menu	Possible cause	Possible remedy
Empty (Alarm)	• Dosing medium tank empty	• Fill tank. • Check plug connection. • Check contact setting (NO/NC).
Low level (Warning)	• Dosing medium tank almost empty	
Overpressure (Alarm)	• Outlet valve blocked	• Replace valve if necessary. See section *8.4 Perform service*.
	• Isolating valve in outlet line closed	• Check flow direction of valves (arrow) and correct if necessary. • Open the isolating valve (on the outlet side).
	• Backpressure exceeds max. operating pressure	• Reduce backpressure. Observe section *4.1 Technical data*.
	• Pressure peaks due to high viscosity	• Enlarge diameter of outlet line.
	• Max. pressure is set too low. See section *7.9 Pressure monitoring*.	• Change pressure setting. See section *7.9 Pressure monitoring*.
Low backpressure (Warning/alarm*)	• Faulty diaphragm	• Change the diaphragm. See section *8.4 Perform service*.
	• Broken outlet line	• Check outlet line and repair if necessary.
	• Pressure differential between inlet and outlet side too low • Leakage in the pressure loading valve at Q < 1 l/h	• Install additional spring-loaded valve (approx. 2 bar) on the outlet side to increase the pressure differential.
	• Deaeration valve open	• Close the deaeration valve.
Air bubble (Warning)	• Broken/leaky inlet line	• Check inlet line and repair if necessary. • Provide positive inlet pressure (place dosing medium tank above the pump).
	• Strongly degassing medium	• Enable "SlowMode". See section *7.6 SlowMode*.
	• Tank dosing medium empty	• Fill tank.
Cavitation (Warning)	• Blocked / constricted / squeezed inlet line • Blocked/constricted inlet valve • Suction lift too high • Viscosity too high	• Enable "SlowMode". See section *7.6 SlowMode*. • Reduce suction lift. • Increase inlet line diameter. • Check inlet line and open isolating valve if necessary.
Suct. valve leak (Warning)	• Leaky/dirty inlet valve. Dosing medium flows back from the dosing head into the inlet line which reduces the target flow. • Leakage in pressure valve or pressure loading valve	• Check valve and tighten it up. • Flush system. • Replace valve if necessary. See section *8.4 Perform service*. • Check O-ring position. • Install strainer in inlet line.
	• Deaeration valve open	• Close the deaeration valve.
Flow deviation (Warning)	• Considerable deviation between target and actual flow	• Check installation.
	• Pump not or incorrectly calibrated	• Calibrate the pump. See section *6.5 Calibrating the pump*.

© 2019 by newterra, ltd.
All rights reserved. No part of this document may be reproduced or transmitted in any form or by any means, electronic, mechanical, photocopying, recording, or otherwise, without prior written permission of newterra ltd.

newterra ltd.
1291 California Avenue, Brockville, ON K6V 5W3
(800) 420-4056 / www.newterra.com

Display in the "Alarm" menu	Possible cause	Possible remedy
Disch. valve leak (Warning)	• Leaky/dirty outlet valve. Dosing medium flows back from the outlet line into the dosing head which reduces the target flow.	• Check valve and tighten it up. Replace valve if necessary. See section *8.4 Perform service*. • Flush system. • Check O-ring position. • Install strainer in inlet line. • Install spring-loaded valve on the outlet side.
Overload (Alarm)	• Backpressure exceeds max. operating pressure	• Reduce backpressure. Observe section *4.1 Technical data*.
	• Outlet valve blocked • Isolating valve in outlet line closed	• Replace valve if necessary. See section *8.4 Perform service*. • Check flow direction of valves (arrow) and correct if necessary. • Open the isolating valve (on the outlet side).
	• Pressure peaks	• Enlarge diameter of outlet line. • Install a pulsation damper in the outlet line close to the outlet valve.
	• Ambient temperature below specified minimum value. See section *4.1 Technical data*.	• Adjust ambient temperature to specified value.
Pressure sensor (Warning)	• Broken "FlowControl" cable or sensor (see fig. 13)	• Check plug connection. • Replace dosing head with sensor if necessary. • If the "Flow control" connection at the pump is damaged, send the pump for repair. See section *8.7 Repairs*.
Motor blocked (Alarm)	• Backpressure greater than nominal pressure	• Reduce backpressure.
	• Incorrectly installed diaphragm	• Install the diaphragm correctly.
	• Damage to gears • Hall sensor failure • Motor failure	• Contact your Grundfos service partner.
BUS Bus error (Alarm)	• Fieldbus communication error	• Check cables for correct specification and damage; replace if necessary. • Check cable routing and shielding; correct if necessary.
CIU (Alarm)	• CIU connection error	• Check plug connection.
	• Faulty CIU	• Replace CIU if necessary.
Sensor signal (Alarm)	• Sensor signal out of range 0/4-20 mA	• Check cable/plug connections and replace, if necessary. • Check signal transmitter.
Stop after power failure (Alarm)	• Function "Stop after power failure" is enabled and power supply was switched on or reestablished after power failure.	• Check power supply and mains cable. • Read section *7.7 Stop after power failure*.
Diaphragm leak. (Alarm)	• Diaphragm leakage	• Read section *8.6 Diaphragm leakage* • Change the diaphragm. See section *8.4 Perform service*.

© 2019 by newterra, ltd.
All rights reserved. No part of this document may be reproduced or transmitted in any form or by any means, electronic, mechanical, photocopying, recording, or otherwise, without prior written permission of newterra ltd.

newterra ltd.
1291 California Avenue, Brockville, ON K6V 5W3
(800) 420-4056 / www.newterra.com

Display in the "Alarm" menu	Possible cause	Possible remedy
Disch. valve leak (Alarm)	• Leaky/dirty outlet valve. Dosing medium flows back from the outlet line into the dosing head and moves the motor. • Inlet pressure too high. Dosing medium flows from the inlet line into the dosing head and moves the motor.	• Replace valve if necessary. See section *8.4 Perform service*. • Install screen in inlet line. • Reduce inlet pressure. Observe section *4.1 Technical data*.
Cavitation (Alarm)	• Blocked / constricted / squeezed inlet line • Blocked/constricted inlet valve • Suction lift too high • Viscosity too high • Cavitation moves the motor	• Enable "SlowMode". See section *7.6 SlowMode*. • Reduce suction lift. • Increase inlet line diameter. • Check inlet line and open isolating valve if necessary.
Overheating (Alarm)	• Motor is overheated	• Reduce ambient temperature. • Stop pump until motor cools down.
Service now (Warning)	• Time interval for service expired	• Perform service. See section *8.4 Perform service*.

* Depending on setting

© 2019 by newterra, ltd.
All rights reserved. No part of this document may be reproduced or transmitted in any form or by any means, electronic, mechanical, photocopying, recording, or otherwise, without prior written permission of newterra ltd.

newterra ltd.
1291 California Avenue, Brockville, ON K6V 5W3
(800) 420-4056 / www.newterra.com

9.1.2 General faults

Fault	Possible cause	Possible remedy
Dosing flow too high	Inlet pressure greater than backpressure	Install additional spring-loaded valve (approx. 2 bar) on the outlet side. Check settings.
		Increase pressure differential.
	Incorrect calibration	Calibrate the pump. See section *6.5 Calibrating the pump*.
No dosing flow or dosing flow too low	Air in dosing head	Deaerate the pump.
	Faulty diaphragm	Change the diaphragm. See section *8.4 Perform service*.
	Leakage/fracture in lines	Check and repair lines.
	Valves leaking or blocked	Check and clean valves.
	Valves installed incorrectly	Check that the arrow on the valve housing is pointing in the direction of flow. Check whether all O-rings are installed correctly.
	Blocked inlet line	Clean inlet line/install strainer.
	Suction lift too high	Reduce suction lift.
		Install priming aid.
		Enable "SlowMode". See section *7.6 SlowMode*.
	Viscosity too high	Enable "SlowMode". See section *7.6 SlowMode*.
		Use lines with larger diameter.
		Install spring-loaded inlet and outlet valve.
	Faulty calibration	Calibrate the pump. See section *6.5 Calibrating the pump*.
	Deaeration valve open	Close the deaeration valve.
Irregular dosing	Valves leaking or blocked	Tighten up valves, replace valves if necessary. See section *8.4 Perform service*.
	Backpressure fluctuations	Keep backpressure constant.
		Activate "AutoFlowAdapt" (only DDA-FCM).
Liquid escaping from the drain opening on the dosing head	Faulty diaphragm	Immediately separate the pump from the power supply! Observe section *8. Service* and especially section *8.6 Diaphragm leakage*.
Liquid escaping	Dosing head screws not tightened	Tighten up screws. See section *5.2 Hydraulic connection*.
	Valves not tightened	Tighten up valves/union nuts. See section *5.2 Hydraulic connection*.
Pump not sucking in	Suction lift too high	Reduce suction lift; if necessary, provide positive inlet pressure.
	Backpressure too high	Open the deaeration valve.
	Soiled valves	Flush system, replace valves if necessary. See section *8.4 Perform service*.

© 2019 by newterra, ltd.
All rights reserved. No part of this document may be reproduced or transmitted in any form or by any means, electronic, mechanical, photocopying, recording, or otherwise, without prior written permission of newterra ltd.

newterra ltd.
1291 California Avenue, Brockville, ON K6V 5W3
(800) 420-4056 / www.newterra.com

7.3.6 P-0903 – Pump - Trouble Shooting

SERVICE CHECKLIST

⚠ WARNING **ELECTRICAL PRECAUTIONS-** Before servicing a pump, always shut off the main power breaker and then unplug the pump - making sure you are wearing insulated protective sole shoes and not standing in water. Under flooded conditions, contact your local electric company or a qualified licensed electrician for disconnecting electrical service prior to pump removal.

⚠ WARNING Submersible pumps contain oils which becomes pressurized and hot under operating conditions - **allow 2½ hours after disconnecting before attempting service.**

CONDITION	COMMON CAUSES
A. **Pump will not start or run.**	Check fuse, low voltage, overload open, open or incorrect wiring, open switch, impeller or seal bound mechanically, defective capacitor or relay when used, motor or wiring shorted. Float assembly held down. Switch defective, damaged, or out of adjustment.
B. **Motor overheats and trips overload or blows fuse.**	Incorrect voltage, negative head (discharge open lower than normal) impeller or seal bound mechanically, defective capacitor or relay, motor shorted.
C. **Pump starts and stops too often.**	Float tight on rod, check valve stuck or none installed in long distance line, overload open, level switch(s) defective, sump pit too small.
D. **Pump will not shut off.**	Debris under float assembly, float or float rod bound by pit sides or other, switch defective, damaged or out of adjustment.
E. **Pump operates but delivers little or no water.**	Check strainer housing, discharge pipe, or if check valve is used vent hole must be clear. Discharge head exceeds pump capacity. Low or incorrect voltage. Incorrect motor rotation. Capacitor defective. Incoming water containing air or causing air to enter pumping chamber.
F. **Drop in head and/or capacity after a period of use.**	Increased pipe friction, clogged line or check valve. Abrasive material and adverse chemicals could possibly deteriorate impeller and pump housing. Check line. Remove base and inspect.

If the above checklist does not uncover the problem, consult the factory - Do not attempt to service or otherwise disassemble pump. Service must be performed by Zoeller Authorized Service Stations. Go to www.zoeller.com/zcopump/TechSupport/authsslisting.htm to find the Authorized Service Station in your area.

© 2019 by newterra, ltd.
All rights reserved. No part of this document may be reproduced or transmitted in any form or by any means, electronic, mechanical, photocopying, recording, or otherwise, without prior written permission of newterra ltd.

newterra ltd.
1291 California Avenue, Brockville, ON K6V 5W3
(800) 420-4056 / www.newterra.com

7.3.7 SP-901 - Volute - Trouble Shooting

Fault or Not

When the fault indicating lamp （OL-1）shines, please confirm the following items again before consultation or requesting for repairing.

Warning
• Please turn the operation selector switch （COS） to "STOP" state on the electrical cabinet before unchain the overload relay. In case that people are involved into the running machine to cause injury with the overload relay unchained.

Attention
• When the machine malfunctions, please stop the machine and contact our company or agents. If continuing to operate the machine under the condition that the machine malfunctions, it will cause more serious damage to the machine.

◆ The disconnecting of thermal overload relays

When the motor or pump overloads, the thermal overload relays in the electrical cabinet could disconnect and start up protection function automatically. As the thermal overload relays disconnect, the machine stops running, caution lights of thermal overload relays corresponding to the overload parts and fault indicating lamp（OL-0） on the electrical cabinet shines at the same time. So under this condition, please eliminate the cause of machine overload to unchain the disconnecting state.

If the thermal overload relays disconnect continually, please stop the machine and contact our company or agents. It will cause more serious damage to the machine, if continuing to operate the machine forcibly.

47

© 2019 by newterra, ltd.
All rights reserved. No part of this document may be reproduced or transmitted in any form or by any means, electronic, mechanical, photocopying, recording, or otherwise, without prior written permission of newterra ltd.

newterra ltd.
1291 California Avenue, Brockville, ON K6V 5W3
(800) 420-4056 / www.newterra.com

Methods for unchaining the disconnecting relays

① Turn the operation mode switch （COS-1）on the electrical cabinet to the stop state.

② Cut off the total electricity supply （ELCB-1）on the electric control cabinet.

③ Eliminate the cause of thermal overload relays disconnecting.

④ Press the white button on the thermal overload relays to unchain the disconnecting state.

※Under the condition that the temperature of thermal overload relays is too high, sometimes it may be impossible to unchain the disconnecting state of the thermal overload relays immediately. So at this time, it may cost a period of time for cooling the thermal overload relays before trying again.

⑤ Turn the operation mode switch （COS-1）to "ON" state again.

◆ The error signal of frequency changer

When the frequency changer （INV） has detected exceptional condition, the liquid crystal display screen of the frequency changer will display "Signal Error" and the machine will stop running automatically. If the display content disaccords with the normal content, please refer to operation instruction of the frequency changer or contact our company or agents.

Recovering methods to signal error

① Turn the operation mode switch （COS-1）to "STOP" state on the electrical cabinet.

② Eliminate the reason of causing signal error

③ Press the program button/reset button of frequency changer （INV）.

④ Turn the operation mode switch （COS-1）to "ON "state on the electrical cabinet and restart the machine.

◆ Confirming matters before consultation

Please confirm the problems which occur frequently as follows before consultation

© 2019 by newterra, ltd.
All rights reserved. No part of this document may be reproduced or transmitted in any form or by any means, electronic, mechanical, photocopying, recording, or otherwise, without prior written permission of newterra ltd.

newterra ltd.
1291 California Avenue, Brockville, ON K6V 5W3
(800) 420-4056 / www.newterra.com

or requesting for repair. If the machine still cannot run normally after confirming, please contact our company or agents.

<Problems occurring frequently>

Cannot run automatically

When setting automatic operation and turning the operation mode to automatic state, the machine still cannot run automatically, please confirm the items as follows:

- Whether manual switch of 24 hours timer（TS-1）is automatic.
- Whether there is any abnormal condition of chemical feeder and sludge storage tank.
- Whether the thermal overload relays disconnect.
- Whether the emergent stop button is pressed.

※ Under the condition of nonstandard making, it may not accomplish the approach mentioned above completely.

After implementing the methods mentioned above, if the problem still cannot be solved, please take more detailed confirmation.

① Before inspection, please be sure to turn the operation mode switch （COS-1） to "STOP" state, turn each operation selector switch（CSL） to "STOP" state and inspect whether the valve state is normal.

② When the total electricity supply （ELCB-1） turns on, the indicator light of electricity supply shines as well as the LED display screen of each frequency changers （INV）. If the indicator light of electricity supply and the LED display screen of each frequency changers don't shine, it may be caused by no electricity supply for the machine, service life of indicating lamps or fault of frequency changers. So when switching or wiring, please cut off the electricity supply and engage professional people to do it.

③ When the electricity supply for operating the electrical cabinet （MCCB-C）is connecting, the fault indicating light （OL-0） does not shine. Even pressing the emergent stop button (EMS), the fault indicating light does not shine. In addition, when getting error signal from chemical feeder, the fault indicating light does not

© 2019 by newterra, ltd.
All rights reserved. No part of this document may be reproduced or transmitted in any form or by any means, electronic, mechanical, photocopying, recording, or otherwise, without prior written permission of newterra ltd.

newterra ltd.
1291 California Avenue, Brockville, ON K6V 5W3
(800) 420-4056 / www.newterra.com

shine. If the fault indicating light (OL-0) shines, it may be caused by the following reasons.

- Drive motors of screw shafts overload
- Dosing pumps for polymer flocculant overload
- Sludge delivery pumps overload
- Frequency changer fault of screw shaft drive motors
- Frequency changer fault of blender motor of the flocculating and mixing trough

Under the condition of restoring the machine, please eliminate the reason causing fault and unchain the short-circuit error.

④ The 24 hours timer （TS-1） is in automatic state. Even the timer is in automatic state and the machine in automatic operation standby state, if present time is beyond the set operation time scope, the machine will not run. If needing the machine working immediately, it is necessary to reset the operation time of the timer.

⑤ Do not make the sludge level lower than the lowest liquid level in the sludge storage tank. If the sludge level is lower than the lowest liquid level, please cut off the total electricity supply （ELCB-1） and electricity supply for operation （MCCB-C）. Please check whether the sludge level of the sludge storage tank is normal before starting the machine.

⑥ Keep the timer for extending running time of screw shafts on power supply. Check whether the indicating lamp on the timer shines. If the indicating lamp does not shine, it may be caused by timer fault or wring fault. So when switching or wiring, please cut off the electricity supply and engage professional people to do it.

After accomplishing each inspection item mentioned above, turn the operation mode switch （COS-1） to automatic state to make the machine run automatically. If the machine still cannot run automatically, please contact our company or agents.

The sludge cannot enter the flocculating and mixing trough

① The sludge delivery pump does not work.

This instance is caused by pump fault; please contact the manufacturer of pump

© 2019 by newterra, ltd.
All rights reserved. No part of this document may be reproduced or transmitted in any form or by any means, electronic, mechanical, photocopying, recording, or otherwise, without prior written permission of newterra ltd.

newterra ltd.
1291 California Avenue, Brockville, ON K6V 5W3
(800) 420-4056 / www.newterra.com

② Whether there is air retained in the sludge delivery pump.

The liquid level controller fault in the sludge storage tank leads that the controller cannot work normally and the sludge delivery pump breathes in air. So the sludge cannot be transported normally, please inspect the sludge storage tank.

③ Whether the sludge delivery pump is blocked.

Turn off the total electricity supply （ELCB-1）and check whether the sludge delivery pump is blocked.

④ Whether the impeller of sludge delivery pump is frayed.

Although the pump is working, the sludge cannot be transported completely. It may be caused by impeller abrasion. Under this condition, please contact the supplier of pumps.

⑤ Whether the sludge in the flocculating and mixing trough is too full (above the highest liquid level of electrode)

If the sludge is too full in the flocculating and mixing trough, it will lead excessive sludge input.

Under this condition, decrease the sludge input quantity by regulating the pipe for adjusting liquid level and regulate the adding quantity of medicine.

The flocculating and mixing trough is full of water and restores over a period of time. If this operation state persists, the flocculating and mixing trough will be full of water and restores automatically again and again. It will lead the pump in the intermittent working state and to shorten the service life of pumps. So please be sure to regulate the sludge delivery quantity and flocculant adding quantity to the best value.

⑥ Impurity clinging on the electrodes in the flocculating and mixing trough leads the machine working abnormally.

The short-circuit caused by impurity clinging on the electrodes is judged incorrectly that it is caused by full water state. Please clean up the impurity.

⑦ Whether the valves of sludge delivery pipe are closed or pipes are blocked.

Check the on-off state of the valves and whether the pipes are blocked.

© 2019 by newterra, ltd.
All rights reserved. No part of this document may be reproduced or transmitted in any form or by any means, electronic, mechanical, photocopying, recording, or otherwise, without prior written permission of newterra ltd.

newterra ltd.
1291 California Avenue, Brockville, ON K6V 5W3
(800) 420-4056 / www.newterra.com

The dewatered mud-cake cannot be discharged

① Whether there is sludge flowing into the volute body from the flocculating and mixing trough

Check whether the pipe connecting the flocculating and mixing trough and the volute body is blocked.

② Whether the size of flocs formed in the flocculating and mixing trough is appropriate.

When the flocs cannot be formed or be formed completely, the solid matters will leak from the gap of the volute body. This instance will lead the decrease of solid matters reclamation rate and decrease of dewatered mud-cake discharged quantity, even no mud-cake discharged. Please regulate to form appropriate flocs.

③ Whether the gap of backing pressboard is appropriate

The mud-cakes cannot be discharged from the outlet when the gap of backing pressboard is 0mm (close completely)

Please set appropriate gap of backing pressboard.

④ Whether the drive motors of the screw shafts run normally

Please inspect whether the drive motors of the screw shafts run normally.

If the motor cannot run normally, it may be caused by motor fault. Please stop the machine immediately and consult our company or agents.

⑤ Whether the rotary direction of screw shaft drive motors is correct

When exchange the volute body, if the wring of screw shaft drive motors is fault, it will lead motor reversion.

The sludge cannot be discharged and it may lead damage to the machine when motor reversion. So if finding motor reversion, please cut off the electricity supply and check the wring.

Discharge jets cannot spray water

① Whether the valves are close

Check whether the valves of all water-supply pipes are open.

② Whether the outlets of discharge jets are blocked by rubbish

© 2019 by newterra, ltd.
All rights reserved. No part of this document may be reproduced or transmitted in any form or by any means, electronic, mechanical, photocopying, recording, or otherwise, without prior written permission of newterra ltd.

newterra ltd.
1291 California Avenue, Brockville, ON K6V 5W3
(800) 420-4056 / www.newterra.com

Take down the discharge jets and clean up the rubbish inside.

③ Whether 「Operation time ON」 of timer for spray time（TLR-3）is on "0"position.

Set the operation time which is indicated by 「Operation time ON」 set button (Red Finger) more than 20 seconds.

④ Whether the electromagnetic valve for spray runs normally

Check whether the electromagnetic valve for spray runs normally. If the electromagnetic valve cannot run normally, it may be caused by electromagnetic valve fault. Please consult our company or agents.

⑤ Whether the electricity supply for spray is turned on

There is a switch set in the electromagnetic valve to protect the electromagnetic valve for spray. If the switch is not turned on, the electromagnetic valve will not start.

Water-content rate of dewatered mud-cake is too high (the formed flocs are less)

① Whether the sludge density is too high

The proportion of solid matters and flocculant adding quantity is maladjusted when the sludge density is low, so the flocs cannot be formed appropriately. At this time, decrease the sludge input quantity according to the disposing capacity of the machine to decrease the solid matters input quantity.

② Whether the PH of sludge is appropriate

If the PH is not appropriate, it may cause that the polymer flocculant cannot make full use of its performance.

Please confirm the appropriate PH range of used polymer flocculant first, and then regulate the PH of sludge to an appropriate value. In addition, the medicine used can decrease the PH value of the sludge, it may cause that the polymer flocculant cannot make full use of its performance. In this instance, it is necessary to minimize the use of chemical compound which can decrease the PH value of sludge.

③ Whether the density of polymer flocculant changes

© 2019 by newterra, ltd.
All rights reserved. No part of this document may be reproduced or transmitted in any form or by any means, electronic, mechanical, photocopying, recording, or otherwise, without prior written permission of newterra ltd.

newterra ltd.
1291 California Avenue, Brockville, ON K6V 5W3
(800) 420-4056 / www.newterra.com

The equilibrium between solid matters of sludge and adding rate of flocculant will be disrupted as soon as the polymer flocculant density changes. This instance will lead that it will not form appropriate flocs.

When preparing the flocculant manually, please confirm the adding quantity of polymer flocculant and water for diluting

When preparing the flocculant automatically, please confirm whether the set value is consistent with the adding quantity.

④ Whether the discharging quantity of polymer flocculant is appropriate

Please stop the machine and discharge all the sludge in the flocculating mixing tank.

Actuate the dosing pump for polymer flocculant in the manual mode and check whether the dosing quantity is consistent with the performance curve of the pump. If the dosing quantity is quite little or even no according to the result of the inspection, please take each inspection as follows:

- Whether pipes are blocked by impurity
- Whether there is solution in the tank for preparing flocculant
- Whether the vulnerable parts of pump are frayed

⑤ Whether there is impurity clinging around the pipes for adjusting liquid level and wire in the measuring tank.

It will affect the back flow of sludge, if impurity clings around the pipes for adjusting liquid level and wire in the measuring tank. The proportion of solid matters and flocculant adding quantity is maladjusted in this instance, so the flocs cannot be formed. At this time please clean up the pipes for adjusting liquid level.

※If the problem still cannot be resolved after actualizing the ①~⑤ methods mentioned above, please choose another polymer flocculant.

Please contact our company、agents or the manufacturer of polymer flocculant.

Water-content rate of dewatered mud-cake is too high (the formed flocs are large)

① Whether the sludge density decreases

© 2019 by newterra, ltd.
All rights reserved. No part of this document may be reproduced or transmitted in any form or by any means, electronic, mechanical, photocopying, recording, or otherwise, without prior written permission of newterra ltd.

newterra ltd.
1291 California Avenue, Brockville, ON K6V 5W3
(800) 420-4056 / www.newterra.com

The proportion of solid matters and flocculant adding quantity is maladjusted when the sludge density becomes low, so the flocs cannot be formed. At this time, increase the sludge input quantity according to the disposing capacity of the machine to increase the solid matters input quantity.

② Whether the density of polymer flocculant changes

The equilibrium between solid matters of sludge and adding rate of flocculant will be disrupted as soon as the density of polymer flocculant changes. This instance will lead that it will not form appropriate flocs.

When preparing the flocculant manually, please confirm the adding quantity of polymer flocculant and water for diluting

When preparing the flocculant automatically, please confirm whether the set value is consistent with the adding quantity.

If the adding quantity of polymer flocculant is overfull, some instances will happen as follows.

Please check whether instances are improved after regulating the flocs to appropriate state.

- Whether there is high glutinous sludge accumulating around the advection pipe
- Whether there is high glutinous sludge accumulating in the gap between plates of volute body.
- Whether the filtration function of volute body is well.
- Whether the filtrate is viscous.
- Whether the load of motor (electric current value) becomes heavy when water-content rate of dewatered mud-cake decreases.

③ Whether there is impurity clinging around the pipes for adjusting liquid level and wire in the measuring tank.

The sludge quantity flowing into the flocculating mixing tank decreases, if there is impurity clings around the wire, and the proportion of solid matters and flocculant adding quantity is maladjusted, so the flocs will become larger. At this

© 2019 by newterra, ltd.
All rights reserved. No part of this document may be reproduced or transmitted in any form or by any means, electronic, mechanical, photocopying, recording, or otherwise, without prior written permission of newterra ltd.

newterra ltd.
1291 California Avenue, Brockville, ON K6V 5W3
(800) 420-4056 / www.newterra.com

time please clean up wire.

※If the problem still cannot be resolved after actualizing the ①~⑤ methods mentioned above, please choose another polymer flocculant.

Please contact our company、agents or the manufacturer of polymer flocculant.

© 2019 by newterra, ltd.
All rights reserved. No part of this document may be reproduced or transmitted in any form or by any means, electronic, mechanical, photocopying, recording, or otherwise, without prior written permission of newterra ltd.

newterra ltd.
1291 California Avenue, Brockville, ON K6V 5W3
(800) 420-4056 / www.newterra.com

8.0 SHUT DOWN

8.1 General Components

- Drain and wash out all tanks.
- Disassemble all PVC ball valves and drain any water inside (open and close to ensure trapped water escapes).
- Leave all valves ½ open during reinstallation
- Open all drain valves and leave open.
- Find all check valves and make sure water is not being held by valve (Wet/Dry Vac works well here).
- Drain / remove all pumps from tanks, ensure no water is left inside the pump.
- Use RV Antifreeze that is suitable for potable water systems
    - Refill any check valve
    - Dump in 2 (qty) 4-L bottles in each tank
- Remove power from system.
- Double check and ensure that there is no water left in any pipes, fittings etc. If it is not possible to remove the water fill with antifreeze.
- Drain the chemical tanks and dispose of chemicals in accordance with manufacturer's recommendations and local regulations.
- Flush all chemical pumps

8.2 B-7911 Shutdown

ITEM	ACTION	DATES CHECKED
1	Re-inspect units to insure any protective devices used are functioning properly. Check for scratches in the finish which will allow corrosion or rust to form.	
2	Rotate wheel a minimum of 10 full revolutions to keep the motor bearing grease from separating and drying out. ***This is a critical step.***	

© 2019 by newterra, ltd.
All rights reserved. No part of this document may be reproduced or transmitted in any form or by any means, electronic, mechanical, photocopying, recording, or otherwise, without prior written permission of newterra ltd.

newterra ltd.
1291 California Avenue, Brockville, ON K6V 5W3
(800) 420-4056 / www.newterra.com

8.9 SP-901 – Volute Shutdown

Under the condition of stopping working more than one week (2-3days for easily dried sludge)

Please be sure to operate as follows to protect the machine under the condition that the machine stops working more than one week.

① It is necessary to eliminate the sludge in the flocculating and mixing trough out by the sewage draining exit and flush the trough by water in case of decomposition and desiccation of the sludge in the trough. ※Keep the blender stirring and open the ball valve below the flocculating and mixing trough to flush the sludge in the trough. It will flush sludge out by this method successfully.

② Regulate the gap of backing pressboard to the biggest and make the screw shaft in the volute body run by manual for one hour. Flush the volute body by water if all the sludge in volute body has been flushed out.

③ Cut off the total electricity supply in the electrical cabinet

Under the condition of stopping for more than 3 months

Under the condition of stopping for more than 3 months, after accomplishing the work mentioned above in < under the condition of stopping working more than one week (2-3days for easily dried sludge)>, it is necessary to accomplish the work as follows:

① It is necessary to close the door of the electrical cabinet and keep the indoor rooms with good ventilation in case that ports in the electrical cabinet rusted.

② It is necessary to operate the machine once per three month by manual in case that electromagnetic relay rusted in the electrical cabinet.

© 2019 by newterra, ltd.
All rights reserved. No part of this document may be reproduced or transmitted in any form or by any means, electronic, mechanical, photocopying, recording, or otherwise, without prior written permission of newterra ltd.

newterra ltd.
1291 California Avenue, Brockville, ON K6V 5W3
(800) 420-4056 / www.newterra.com

9.0 SERVICE & SUPPORT

9.1 Commissioning and Start-up

Commissioning & start-up of the **newterra** System is the last step of the **newterra** project execution process. Experienced newterra engineers and technicians are available to conduct these procedures including system initial set up and primary start-up and providing all performance tests according to the pre-commissioning checklist.

Initial on-site training program is an important part of the commissioning service as well. During on-site training, a **newterra** technical representative will cover process monitoring, system operation, maintenance, and troubleshooting activities related to the **newterra** System.

9.2 Post commissioning Services

A comprehensive range of post commissioning services are available from **newterra** beyond system design and installation. Specific services include:

- Technical support (including after-hours emergency telephone support).
- Spare parts order and delivery.
- Training program.
- Plant optimization and upgrades.
- Telemetry control and monitoring.
- Assistance in preparing system performance reports (process data monitoring & analysis).
- Preventive maintenance cleaning (including membrane cleaning).
- System audits for reviewing the performance and efficiency of all MBR subsystems.

9.2.1 Technical Support

Technical support is available to assist in troubleshooting of **newterra** MBR systems during normal working hours 8:30 am to 5:00 pm (Eastern Time Zone for **newterra** ltd.). Telephone service is available via **1.800.420.4056**.

Emergency **24/7 telephone technical support –** This will be activated upon subscribing to **newterra's** 24/7 technical support service. If a problem cannot be resolved through telephone or e-mail support, **newterra** technicians and engineers are available for site visits.

© 2019 by newterra, ltd.
All rights reserved. No part of this document may be reproduced or transmitted in any form or by any means, electronic, mechanical, photocopying, recording, or otherwise, without prior written permission of newterra ltd.

newterra ltd.
1291 California Avenue, Brockville, ON K6V 5W3
(800) 420-4056 / www.newterra.com

9.2.2 Spare Parts

newterra has spare parts to provide quick response to any critical system breakdown. Contact **newterra** parts department at **1.800.420.4056.**

All parts and components associated with **newterra** MBR Systems are available from within service departments and manufacturing facilities of **newterra** ltd across Canada and abroad.

Potentially required spare parts are:

- membrane modules/membrane cassettes;
- parts for repair/replacement (valves, transmitters, switches, gauges, pH & DO probes, pump motors, analyzers, PLC components, fuses, etc.);
- maintenance spare parts (air blowers, air filters, pumps, immersion heaters, chemical metering pumps, etc.).

9.2.3 Assistance in telemetry control and monitoring

newterra SITE-LINK is a customized software program and hardware configuration which provides a real-time link to a treatment system via cellular modem or customer supplied internet connection using our secure Site-Link Server.

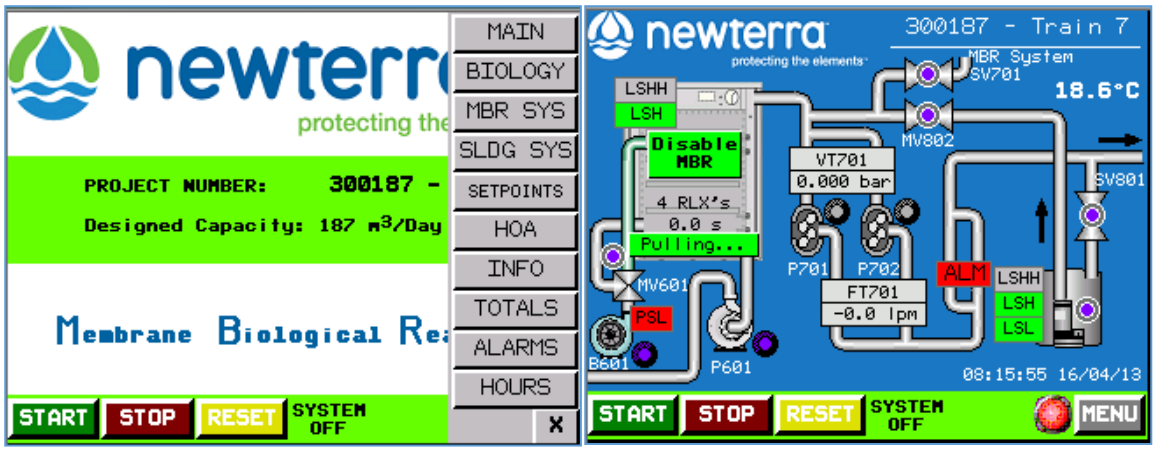

newterra Site-Link comes with the following customizable features:

- Customized P&ID layout with system status
- Start/Stop/Reset of system
- Manual control of all system components
- Data logging downloads in .csv format†
- Daily system status reports (E-Monitor)
- Alarm history including current alarm status
- Hour meters for applicable equipment
- Customization of all system set points†
- Live and historical trending
- Immediate text & email on alarm (E-Alarm)

†certain restrictions apply

© 2019 by newterra, ltd.
All rights reserved. No part of this document may be reproduced or transmitted in any form or by any means, electronic, mechanical, photocopying, recording, or otherwise, without prior written permission of newterra ltd.

newterra ltd.
1291 California Avenue, Brockville, ON K6V 5W3
(800) 420-4056 / www.newterra.com

The basic system requires that the customer provide a standard computer network cable to the control panel. If the customer's computer network is accessible to the internet, this system can also be monitored from any internet enabled computer. Static IP is not required but is recommended and must be provided by customer.

This system is not available if customer supplied internet connection or cellular service is not available at the site. During internet outages, reports cannot be sent and system status cannot be monitored remotely.

9.2.4 Site visits and system audits

Site visits and system audits can be arranged at an additional cost. Contact **newterra** for all financial aspects of **newterra** initial and post-commissioning services.

During a system audit, technical reviews of the performance of all **newterra** MBR subsystems and the efficiency of the biological process can be performed. Based on the site visit and agenda discussed with the client, we can assist in:

- Maintenance coordination and scheduling, including membrane maintenance and cleaning.
- Validation of chemical dosing settings.
- MBR System inspection for the proper operation of the membrane system in accordance with the O&M manual; equipment calibration, process optimization and upgrades.
- Continued on-site operator training and coaching.

© 2019 by newterra, ltd.
All rights reserved. No part of this document may be reproduced or transmitted in any form or by any means, electronic, mechanical, photocopying, recording, or otherwise, without prior written permission of newterra ltd.

newterra ltd.
1291 California Avenue, Brockville, ON K6V 5W3
(800) 420-4056 / www.newterra.com

© 2019 by newterra, ltd.
All rights reserved. No part of this document may be reproduced or transmitted in any form or by any means, electronic, mechanical, photocopying, recording, or otherwise, without prior written permission of newterra ltd.

newterra ltd.
1291 California Avenue, Brockville, ON K6V 5W3
(800) 420-4056 / www.newterra.com

10.0 WARRANTY

WARRANTY

This Warranty Agreement is between Newterra (known as **Newterra**) and customer (known as the **Buyer**).

General Warranty Statement

1. **Newterra** warranties those products of its manufacture against defective workmanship or material for a period of 12 months from startup or 18 months from the date of notice of readiness to ship, whichever comes first.
2. This warranty is expressly and strictly limited to replacing, without charge (see Warranty Exclusions), any part or parts which proven to **Newterra's** satisfaction upon examination, to have been defective in design, material or workmanship, and which have not been neglected, abused or misapplied, provided the **Buyer** gives **Newterra** immediate written notice upon discovery of any claimed defect.
3. During the warranty period, parts will be shipped as necessary with instructions to replace, which can be further elaborated over phone or email; visit(s) of our technician to site can be covered if there is a service agreement in place; otherwise, actual charges will be quoted to the owner at that time, if required.
4. **Newterra** will also warranty those component parts manufactured by others to the extent of the original manufacturer's warranty. In any case, specific components warranties will be extended a minimum of one year from date of notice of readiness to ship.
5. Membranes, if used, will be covered under separate warranty statement.
6. This warranty shall not be construed as a fitness of purpose warranty nor a performance warranty.

Warranty Exclusions

1. Warranty coverage does not include:
   - Freight, labor, travel, and living expenses associated with parts replacement
   - Normal maintenance items such as lubrication, fan belts, and cleaning of the equipment
   - Consumable items such as filters and reagents.
   - Replacement of items due to normal wear and tear
   - System parts damaged because of **Buyer** changes to the system and/or PLC program without the written consent of **Newterra**.
   - System electrical components or motors damaged by inconsistent power, voltage fluctuations and/or frequent power failures.
2. If the **Buyer**, or any contractor employed by the **Buyer**, contracts an outside company, other than **Newterra** for modification of system equipment, without knowledge of **Newterra**, the warranty coverage will be denied.
3. If the **Buyer**, or any installation contractor employed by the **Buyer**, contracts outside **Newterra** for installation work or erection of quoted equipment, the **Buyer** shall assume full responsibility for said contract.
4. The warranty shall not cover normally scheduled preventative maintenance or maintenance services listed in O&M Manual unless specifically contracted with **Newterra**.
5. If **Newterra's** Supplier assesses a part evaluation fee as part of their warranty claim assessment process, then the **Buyer** will be required to pay this fee. All parts must be returned to **Newterra**, transportation prepaid, unless other arrangements have been pre-approved by **Newterra**.

© 2019 by newterra, ltd.
All rights reserved. No part of this document may be reproduced or transmitted in any form or by any means, electronic, mechanical, photocopying, recording, or otherwise, without prior written permission of newterra ltd.

Warranty Validation

1. **Newterra** requires that the system be commissioned by a **Newterra** factory trained technician unless specifically authorized by **Newterra**. **Newterra** authorization will be dependent on the qualifications of the **Buyer's** / contractor technicians.
2. Warranty validation is conditional upon timely receipt of:
    a. Signed Installation Checklist – by authorized **Buyer** representative, if not **Newterra**.
    b. As built Site drawings – by authorized **Buyer** representative, if not **Newterra**.
    c. Signed Pre-Commissioning Checklist – by authorized **Buyer**'s representative, if not **Newterra**.
    d. Signed Commissioning Checklist – by authorized **Buyer**'s representative, if not **Newterra**.
3. If the warranty validation requirements are not followed, **Newterra** reserves the right to deny warranty coverage.

Warranty Conditions

1. The system must be maintained and serviced in accordance with the schedule and procedures listed in the system O&M Manual. Failure to follow **Newterra's** recommendations may result in a denial of warranty coverage. **Newterra** reserves the right to review maintenance records as part of the warranty claim assessment process.

© 2019 by newterra, ltd.
All rights reserved. No part of this document may be reproduced or transmitted in any form or by any means, electronic, mechanical, photocopying, recording, or otherwise, without prior written permission of newterra ltd.

newterra ltd.
1291 California Avenue, Brockville, ON K6V 5W3
(800) 420-4056 / www.newterra.com

APPENDIX A

Drawings and Bill of Material

© 2019 by **newterra**, ltd.
All rights reserved. No part of this document may be reproduced or transmitted in any form or by any means, electronic, mechanical, photocopying, recording, or otherwise, without prior written permission of **newterra** ltd.

Civil Construction Notes
- install sump at location indicated.
- install grating between building fans and outside louvers.
- thermal insulation on walls and ceiling.
- door colour to be the same as building.

Mech/Elec. Construction Notes
- locate cooling thermostat in the warmest location at ceiling level.
- locate heating thermostat at floor level.
- plug and seal (with washers) any holes in the floor to contain water spills.
- maximum width for shipping is 102". this includes all connections that protrude through the sides of the enclosure.

Commissioning Notes
- fan and louver hoods need to be installed on site. cannot ship with hoods attached.
- some flow meters such as rmc meters will be shipped with the unions in the process piping loosened to ensure meters are not damaged during shipment.
- buildings need to be shimmed on site to allow doors to open freely. please have shimming material ready during building installation.
- for buildings in cold weather climates, where the building is elevated, a skirt must be built around the base to prevent the floor from freezing.
- newterra recommends pad be at least 12" larger than enclosure in all directions. local codes may require alternate dimensions.

newterra standard system labels
- flow direction labels
- air line labels
- water line labels
- air/water line labels
- hot surface label (lines >= 140 degf)
- hearing protection labels
- warning label: this machine is automatically controlled
- arc flash warning label

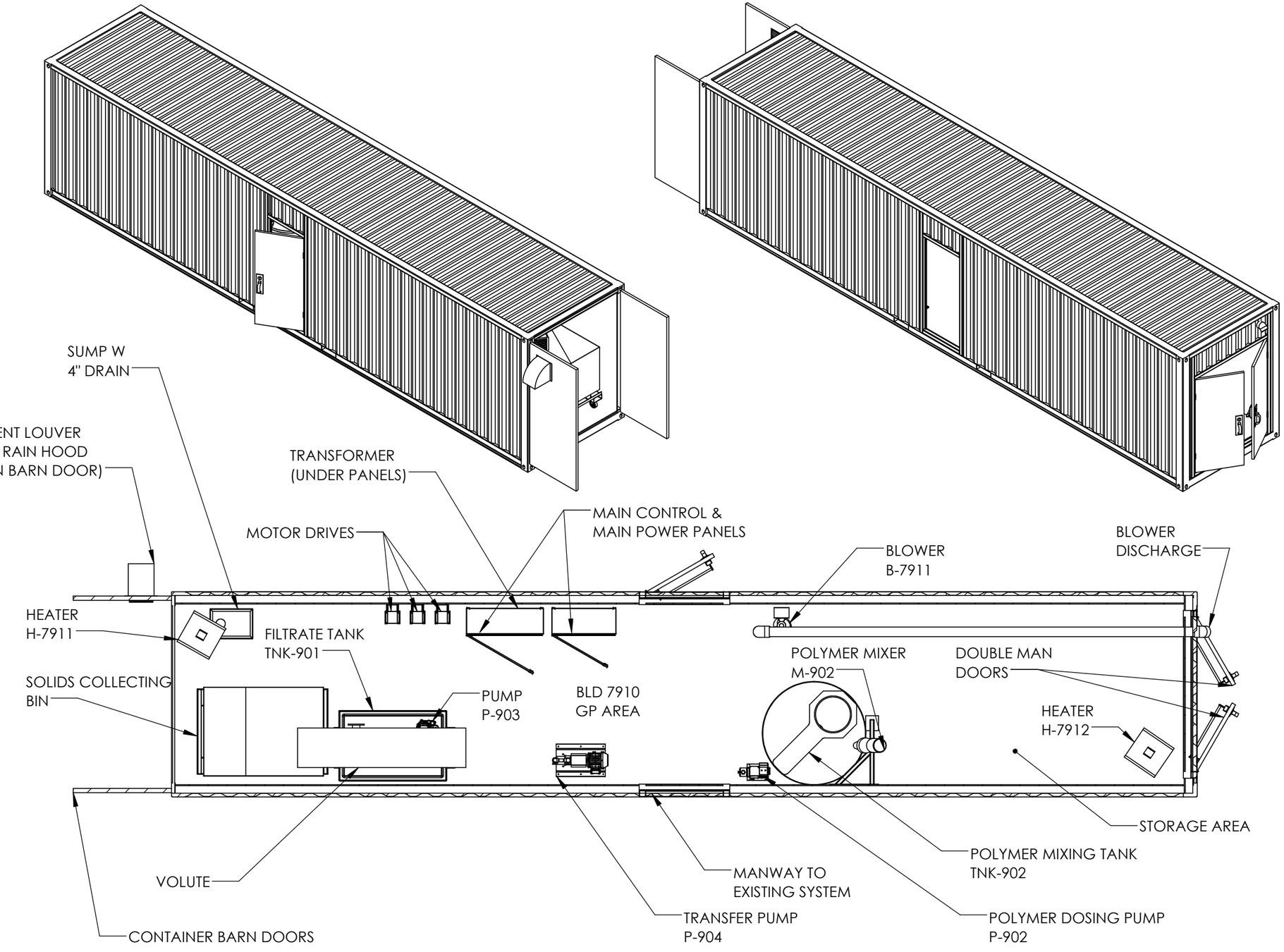

GENERAL TOLERANCES
.XX ± 1/8"
.XXX ± 1/16"
UNLESS OTHERWISE SPECIFIED DIMENSIONS ARE IN INCHES

STATUS					DRAWING TITLE:	DRAWING NUMBER:
As Built					System Layout	-
LEVEL:	REVISED BY:	REVISED ON:	APPROVED BY:	APPROVED ON:	PROJECT TITLE:	PROJECT NUMBER:
C-01	NM	28/8/2019			Agnico Eagle Volute	1905884
THIS INFORMATION IS THE PROPERTY OF newterra AND CANNOT BE REUSED OR REPRODUCED WITHOUT WRITTEN CONSENT.					CUSTOMER:	DRAWN BY:
					Agnico Eagle Mines Limited	NM
						DATE: Jul 30, 2019
						SHEET 1 OF 1

1905884

Agnico Eagle Volute
Agnico Eagle Mines

newterra®

MECHANICAL DRAWING PACKAGE

THIS INFORMATION IS THE PROPERTY OF newterra ltd.. AND CANNOT BE REUSED OR REPRODUCED WITHOUT THE WRITTEN CONSENT OF newterra ltd.

BLD-7910 - General Purpose Area
BORDER DEFINES THE LIMIT OF BLD-7910
GENERAL PURPOSE AREA AS PER NFPA 820, 2016 EDITION, AS INTERPRETTED

WWTP DESIGN PARAMETERS
MAXIMUM DAILY FLOW (MDF) = 5 m^3/day (3.5 LPM, 1.0 GPM)
WAS VOLUME WITH DEWATERING = 0.28 m^3/day @ 18% SOLIDS CONTENT w/w DRY SOLIDS
SYSTEM AREA CLASSIFICATION = NFPA 820, 2016 EDITION, AS INTERPERETED

AREA TO BE VENTILATED = 2880 CUFT
MINIMUM AIRFLOW REQUIRED = 288 CFM (6 EXCHANGES/HOUR)

TAG = BJ-7911
MANUFACTURER = Cincinnati
MODEL NUMBER = LM4
POWER = 0.5 HP
VOLTAGE & PHASE = 115V
FLOWRATE = 300 SCFM
PRESSURE = 1.25"WC
VFD = NO
CLASSIFICATION = EXP

B -7911 FURNCO
6"
6"
PIPED TO 12" ABOVE FLOOR LEVEL

PAL -7911
PSL -7911
0.07 to 0.22 "wc
4" SCH 80 PVC 300 SCFM
TERMINATED ON EXTERIOR OF ENCLOSURE W/ 4" SCREENED 45 DEG ELBOW

3/4" GARDEN HOSE CONNECTION
V-0901 PVC 1/2"
V-0904 PVC 1/2"
1/2" SCH 80 PVC WATER SUPPLY
MANUFACTURER = WATTS LF007
DESCRIPTION = 1007M1QT
TYPE = BACKFLOW PREVENTOR DOUBLE CHECK VALVE
APPROVAL = AWWA & ASSE
1/2" SCH80 PVC TERMINATED INSIDE ENCLOSURE W/1/2" FNPT FITTING
POTABLE WATER IN

2" SCH80 PVC
1.59 m^3/hr (7 GPM)

TAG = MJ-901
MANUFACTURER = VOLUTE
MODEL NUMBER = INCLUDED WITH MYDL-131
POWER = 0.18 kW (1/4 HP)
VOLTAGE & PHASE = 575V/3/60hz

VFDA -M901
VFD -M901
M -901
F -M901
LAHH -0901
LSHH -0901

TAG = SVJ-0901
MANUFACTURER = ASCO
MODEL NUMBER = SCE2380004
POWER =
VOLTAGE & PHASE = 230V/50-60HZ

SV -0901
SVJ-0901
3/4" 1/2"
1/2" SCH 80 PVC
V-0902 PVC 1/2"
1/2" SCH 80 PVC WATER SUPPLY

TAG = SPJ901
MANUFACTURER = VOLUTE
MODEL NUMBER = MYDL-131
POWER = 0.18 kW (1/4 HP)
VOLTAGE & PHASE = 575V/3P/60HZ

VFDA -SP901
VFD -SP901
SP 901
F -SP901
3/4"
SPRAY NOZZLES

2"
1"
4"
INLET TANK
FLOCCULATION TANK
VOLUTE
SOLIDS COLLECTION BIN W/ CASTORS
1-1/2"
MANUAL DRAIN
4" SCH80 PVC OVERFLOW
4" SCH80 PVC EFFLUENT/OVERFLOW

1" SCH 80 PVC
1/2" SCH 80 PVC WATER SUPPLY
V-0903 PVC 1/2"

Delta Mixer: PG-2
Horsepower: 0.5 HP
Voltage: 575V/3P/60 Hz
Impeller: 8" propeller SS
Shaft: 48"x3/4" SS shaft
Mount: Cup mount

Polymer Eductor: PE1
Nominal Lift = 5 feet
Nominal Lift Rate = 1 lb dry polymer per minute
Water Flowrate = 25-35 GPM
Water Supply Pressure = 20 - 40 PSIG

TAG = MJ-0902
MANUFACTURER = Custom DELTA
MODEL NUMBER = PG-2
POWER = 1/2HP
VOLTAGE & PHASE = 575V/3P/60HZ

M -0902
3/4" 1/2"
1/2"
1/2"
DRY POLYMER BAGS
CALIBRATION COLUMN
LAL -0902
LSL -0902
LALL -0902
LSLL -0902
2"
POLYMER MIXING TANK (TNK-902)
1.13 m^3 (300 GALLON) - NORWESCO P/N 62343
1.24 m DIA x 1.55 m H (49 in DIA x 61in H w/ Stand)
V-0908 PVC 1 1/2"
V-0910 PVC 1 1/2"
PULSE/PAUSE CONTACT
P -0902
(1 DUTY)
1" SCH 80 PVC
TAG = PJ-0902
MANUFACTURER = Grundfos
MODEL NUMBER = DDA 60-10 AR-PV/E/C-F-32A7A7BG
POWER =
VOLTAGE & PHASE = 110V/1P/60hz

0-15 PSI
PI -0903
1-1/2" SCH80 PVC
2.27 m^3/hr (10 GPM)
LAHH -0903
LSHH -0903
INTEGRAL
LSH -P903
1-1/2"
V-0906 PVC 1-1/2"
P -0903
TAG = PJ-0903
MANUFACTURER = Zoeller
MODEL NUMBER = MS3
POWER = 1/3 HP
VOLTAGE & PHASE = 110/115 V
FLOWRATE = 10 GPM
PRESSURE = 17.5 FT TDH
VFD = NO
CLASSIFICATION = SUBMERSIBLE GP
FILTRATE TANK (TNK-903)
625 L (165 US GALLON)
50.5 in L x 33 in W x 31.25 in H

2" SCH80 PVC
1.59 m^3/hr (7 GPM)
0-60 PSI
PI -0901
V-0911 PVC 2"
SP-0901 Brass 1/2"
V-0912 PVC 2"
SET @ 50PSIG
PRV-0901
EPDM
1"
3/4"
VFDA -P901
VFD -P901
P -901
TAG = PJ-901
MANUFACTURER = Teco
MODEL NUMBER = MOYNO 33301
POWER = 1 HP
VOLTAGE & PHASE = 575V/3P/60HZ
FLOWRATE = 7 GPM
PRESSURE = 25 PSI
VFD = YES
CLASSIFICATION = TEFC CL1 DIV2
YC -P901
WAS INLET
2" SCH80 PVC TERMINATED INSIDE ENCLOSURE W/2" FNPT FITTING
EPDM

1-1/2" SCH80 PVC TERMINATED INSIDE ENCLOSURE W/ 1-1/2" FNPT
V-0907 PVC 1 1/2"
TO EXISTING SLUDGE TANK
YC -P903
1-1/2" SCH80 PVC TERMINATED INSIDE ENCLOSURE W/ 1-1/2" FNPT
V-0913 PVC 1 1/2"
TO EXISTING INLET SCREEN

BLD-7910 FLOOR DRAIN W/ GRATING 4"
P-TRAP BY OTHERS

INTEGRAL
TSL -7911
H -7911
TAG = HJ-7911
MANUFACTURER = Ouellet
MODEL NUMBER = OAS10036T
POWER = 10 kW
VOLTAGE & PHASE = 600V 3PH

INTEGRAL
TSL -7912
H -7912
TAG = HJ-7912
MANUFACTURER = Ouellet
MODEL NUMBER = OAS10036T
POWER = 10 kW
VOLTAGE & PHASE = 600V 3PH

TALL -7911
40-100F/ 5-40C
TSLL -7911
ESA -8201
ES -8201

NOTES:
- Water flow meters: Install as per manufactures recommendations. Ensure that throttling valves are not in direct line of the meter.
- Pitot Air flow meters: Provide 8 Dia. of straight pipe before and 3 Dia. of straight pipe after meters. Avoid tees and elbows before and after meters.
- Materials of valves and piping is to be as specified on the diagram.
- There are no special piping requirements outside of newterra's standards unless specified on the diagram.
- Flexible hose is to be as specified on the diagram. If a flexible connection is preferred please consult Engineering to ensure selected hose is rated for the operating conditions.
- Do not use PVC pipe on air lines over 5 PSIG.
- All female PVC threaded adaptors must be re-enforced female adaptors.
- No dissimilar metals are to be in direct contact on water lines. Follow ENG.SOP.010
- All PVC must be schedule 80

newterra
1291 CALIFORNIA AVE.
BROCKVILLE ONTARIO
CANADA K6V 5Y6
PHONE:1-800-420-4056
www.newterra.com

LEVEL	REVISION	DATE (dd/mm/yy)	BY
C01	AS BUILT	03/09/2019	jeaton
B01	FOR PRODUCTION	02/08/2019	jeaton
A01	FOR CUSTOMER REVIEW	30/07/2019	jeaton

PROJ. NO: 1905884
CUSTOMER: Agnico Eagle Mines Agnico Eagle Volute
TITLE AND LOCATION: PROCESS AND INSTRUMENTATION DIAGRAM
SCALE: NTS | SHEET: 2 | SHEETS: 3

THIS INFORMATION IS THE PROPERTY OF newterra ltd. AND CANNOT BE REUSED OR REPRODUCED WITHOUT THE WRITTEN CONSENT OF newterra ltd.

VALVES AND PIPING

NO NC

BALL VALVE -

GATE VALVE -

GLOBE VALVE -

NEEDLE VALVE -

SLIDE VALVE -

SOLENOID VALVE -

BUTTERFLY VALVE -

SWING CHECK VALVE -

WAFER CHECK VALVE -

SPRING CHECK VALVE -

WYE STRAINER -

SAMPLE PORT -

PRESSURE RELIEF VALVE -

VACUUM RELIEF VALVE -

CAMLOCK CONNECTION -

FLEXIBLE CONNECTION -

FLANGED CONNECTION -

REDUCER -

UNION -

ADSORBENT FILTER - (A TWIST DRAIN, A AUTO DRAIN)

COALESCING FILTER - (TWIST DRAIN, AUTO DRAIN)

PARTICULATE FILTER - (TWIST DRAIN, AUTO DRAIN)

FILTER, SILENCER -

PRESSURE REGULATOR -

REGULATOR W/ FILTER -

EQUIPEMENT

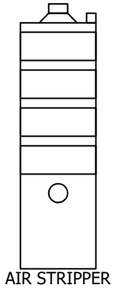

AIR STRIPPER

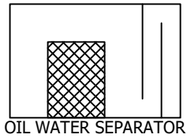

OIL WATER SEPARATOR

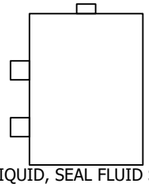

VAPOR/LIQUID, SEAL FLUID SEPARATOR

BAG FILTER

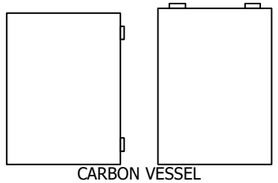

CARBON VESSEL

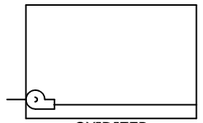

OXIDIZER

PRODUCT STORAGE DRUM, TANK

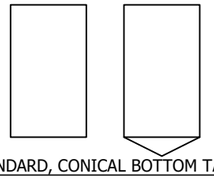

STANDARD, CONICAL BOTTOM TANK

EQUIPEMENT

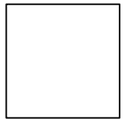

CLOSED TOP TANK

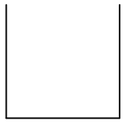

OPEN TOP TANK

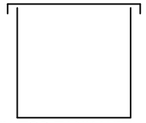

OPEN TOP TANK WITH LID

AIR DIFFUSER ASSEMBLY

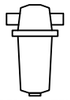

STRAINER/FILTER

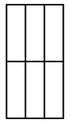

MEMBRANE CASSETTE

NO CLOG SPRAYER ASSEMBLY

ULTRA VIOLET LIGHT

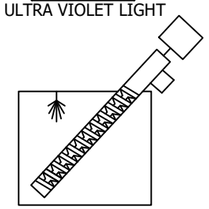

ROTARY SCREEN

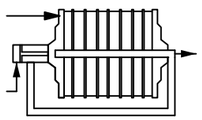

FILTER PRESS

EQUIPEMENT

CENTRIFUGAL PUMP -

PROGRESSIVE-CAVITY PUMP -

CHEMICAL-INJECTION PUMP -

CENTRIFUGAL, REGENERATIVE BLOWER -

POSITIVE-DISPLACEMENT BLOWER -

ROTARY-CLAW BLOWER -

LINEAR BLOWER -

LIQUID-RING PUMP -

ROTARY-VANE COMPRESSOR -

RECIPROCATING COMPRESSOR -

PASSIVE COOLING FINS -

HEAT EXCHANGER -

EDUCTOR -

MAGNETIC FLOWM METER -

AVERAGING PITOT TUBE -

VENTURI -

ROTOMETER -

WATER FLOW METER -

INSTRUMENTATION IDENTIFIERS

	FIRST LETTERS: MEASURED/INITIATING VARIABLE	FIRST LETTERS: VARIABLE MODIFIER	SUCCEEDING LETTERS: READOUT/PASSIVE FUNCTION	SUCCEEDING LETTERS: OUTPUT/ACTIVE FUNCTION	SUCCEEDING LETTERS: FUNCTION MODIFIER
A	ANALYSIS		ALARM		
B	BURNER, COMBUSTION				
C	CYCLE	CONTROL		CONTROL	CLOSE
D		DIFFERENCE, DIFFERENTIAL			DEVIATION
E	VOLTAGE		SENSOR, PRIMARY ELEMENT		
F	FLOW, FLOW RATE	RATIO			
G	GAS (LEL)		GLASS, GAUGE, VIEWING DEVICE		
H	HAND			HAND	HIGH
I	CURRENT		INDICATE		
J	POWER		SCAN		
K	TIME, SCHEDULE	TIME RATE OF CHANGE		CONTROL STATION	
L	LEVEL		LIGHT		LOW
M	MONITOR			MOTORIZED	MIDDLE, INTERMED
N					
O			ORIFICE, RESTRICTION		OPEN
P	PRESSURE		POINT(TESTCONNEC'N)	PNEUMATIC	
Q	QUANTITY	INTEGRATE, TOTALIZE	INTEGRATE TOTALIZE		
R	RADIATION		RECORD		RUN
S	SPEED, FREQUENCY	SAFETY		SWITCH, SOLENOID	STOP
T	TEMPERATURE			TRANSMIT	
U	MULTIVARIABLE		MULTIFUNCTION	MULTIFUNCTION	
V	VIBRATION, MECHANICAL ANALYSIS, VACUUM			VALVE, DAMPER, LOUVER	
W	WEIGHT, FORCE		WELL, PROBE		
X	UNCLASSIFIED	X-AXIS	ACCESSORY DEVICES, UNCLASSIFIED	UNCLASSIFIED	UNCLASSIFIED
Y	EVENT, STATE, PRESENCE	Y-AXIS		AUXILIARY DEVICES	
Z	POSITION, DIMENSION	Z-AXIS, SAFETY INSTRUMENTED SYSTEM		DRIVER, ACTUATOR, UNCLASSIFIED FINAL CONTROL ELEMENT	

- INDICATING INSTRUMENT
- DIGITAL INPUT TO CONTROL PANEL
- DIGITAL INPUT CAUSING ALARM
- DIGITAL INPUT CAUSING SYSTEM SHUTDOWN ALARM
- ANALOG INPUT TO CONTROL PANEL
- ANALOG OUTPUT FROM CONTROL PANEL

VFD - VARIABLE FREQUENCY DRIVE
SWD - SIDE WATER DEPTH
HRT - HYDRAULIC RETENTION TIME
AS - AIR STRIPPER
BLD - BUILDING, TRAILER, OR SKID
FLT - FILTER VELLEL
LPC - LIQUID-PHASE CARBON VESSEL
MFD - MANIFOLD
OWS - OIL/WATER SEPARATOR
OX - OXIDIZER
PST - PRODUCT STORAGE TANK
SOS - SEAL OIL SEPARATOR
SWS - SEAL WATER SEPARATOR
TNK - TANK
VLS - VAPOR/LIQUID SEPARATOR
VPC - VAPOR-PHASE CARBON VESSEL

NOTES:

newterra

1291 CALIFORNIA AVE.
BROCKVILLE ONTARIO
CANADA K6V 5Y6

PHONE:1-800-420-4056
www.newterra.com

LEVEL	REVISION	DATE (dd/mm/yy)	BY
C01	AS BUILT	03/09/2019	jeaton
B01	FOR PRODUCTION	02/08/2019	jeaton
A01	FOR CUSTOMER REVIEW	30/07/2019	jeaton

PROJ. NO: 1905884

CUSTOMER: Agnico Eagle Mines
Agnico Eagle Volute

TITLE AND LOCATION: LEGEND

SCALE: NTS | SHEET: 6 | SHEETS: 3

THIS INFORMATION IS THE PROPERTY OF newterra ltd. AND CANNOT BE REUSED OR REPRODUCED WITHOUT THE WRITTEN CONSENT OF newterra ltd.

1905884

Agnico Eagle Volute
Agnico Eagle Mines

newterra®

ELECTRICAL DRAWING PACKAGE

THIS INFORMATION IS THE PROPERTY OF newterra ltd.. AND CANNOT BE REUSED OR REPRODUCED WITHOUT THE WRITTEN CONSENT OF newterra ltd.

ELEC-All Electrical Drawings

Page #	Location	Description 1	Description 2
1	.	ELECTRICAL TITLE PAGE	
2	.	DRAWING LIST	
3	.	SPECIFICATIONS	
4	.	ELECTRICAL LEGEND	
5	.	SINGLE LINE DIAGRAM	
6	MCP	PLC COMMUNICATIONS/LAYOUT	
7	MPP	600V POWER DISTRIBUTION	
8	MPP	600V POWER DISTRIBUTION	
9	MPP	120/240V POWER DISTRIBUTION	
10	MPP	SPARE SHEET	
11	MPP	MPP PANEL LAYOUT	
12	MCP	120V CONTROL POWER	
13	MCP	24VDC CONTROL POWER	
14	MCP	VFD ESTOP CIRCUIT	
15	MCP	DISCRETE INPUTS	PLC BASE
16	MCP	DISCRETE INPUTS	PLC BASE
17	MCP	DISCRETE OUTPUTS	PLC BASE
18	MCP	DISCRETE OUTPUTS - PLC BASE	& MISC CONTROL
19	MCP	SPARE SHEET	
20	MCP	MCP PANEL LAYOUT	
21	.	MPP BILL OF MATERIAL	MODULE 8201
22	.	MPP BILL OF MATERIAL	MODULE 8201
23	.	MCP BILL OF MATERIAL	MODULE 8202
24	.	MCP BILL OF MATERIAL	MODULE 8202
25	.	BLD-7910 BILL OF MATERIAL	MODULE 8910

NOTES:

newterra
1291 CALIFORNIA AVE.
BROCKVILLE ONTARIO
CANADA K6V 5Y6
PHONE: 1-800-420-4056
www.newterra.com

LEVEL	REVISION	DATE (dd/mm/yy)	BY
C	AS BUILT	06/09/2019	DMB
B	FOR PRODUCTION	01/08/2019	DMB
A1	FOR REVIEW	30/07/2019	DMB

PROJ. NO: 1905884

TITLE AND LOCATION: DRAWING LIST

CUSTOMER: Agnico Eagle Mines
Agnico Eagle Volute

SCALE	SHEET	SHEETS
NTS	2	25

THIS INFORMATION IS THE PROPERTY OF newterra ltd. AND CANNOT BE REUSED OR REPRODUCED WITHOUT THE WRITTEN CONSENT OF newterra ltd.

ELECTRICAL SPECIFICATIONS

VOLTAGE	600VY 3 WIRE
PHASE	3
FREQUENCY	60Hz
FULL LOAD AMPS	31
MAIN DISCONNECT SIZE	60
MAIN OVERCURRENT PROTECTION RATING	40
SCCR SYMMETRICAL (kAMPS)	65
SYSTEM APPROVAL AND CLASSIFICATION	cMETus GP
PANEL APPROVAL AND CLASSIFICATION	cMET GP TO C22.2 NO.14
ELECTRICAL INSTALL SPECIFICATIONS	PVC
WIRE SPECIFICATIONS	WIRE TO CANADIAN STANDARDS

NOTES:

newterra
1291 CALIFORNIA AVE.
BROCKVILLE ONTARIO
CANADA K6V 5Y6
PHONE: 1-800-420-4056
www.newterra.com

LEVEL	REVISION	DATE (dd/mm/yy)	BY
C	AS BUILT	06/09/2019	DMB
B	FOR PRODUCTION	01/08/2019	DMB
A1	FOR REVIEW	30/07/2019	DMB

PROJ. NO: 1905884

TITLE AND LOCATION: SPECIFICATIONS

CUSTOMER: Agnico Eagle Mines
Agnico Eagle Volute

SCALE	SHEET	SHEETS
NTS	3	25

THIS INFORMATION IS THE PROPERTY OF newterra ltd. AND CANNOT BE REUSED OR REPRODUCED WITHOUT THE WRITTEN CONSENT OF newterra ltd.

FLOW SWITCH, NORMALLY CLOSED

FLOW SWITCH, NORMALLY OPEN

FLOAT SWITCH, NORMALLY CLOSED

GND0406A

FLOAT SWITCH, NORMALLY OPEN

LIMIT SWITCH, NORMALLY CLOSED

LIMIT SWITCH, NORMALLY OPEN

PRESSURE SWITCH, CHANGE OVER CONTACTS

PRESSURE SWITCH, NORMALLY CLOSED OPENS ON PRESSURE INCREASE

IS0416A

PRESSURE SWITCH, NORMALLY OPEN CLOSES ON PRESSURE INCREASE

TEMPERATURE SWITCH, CHANGE OVER CONTACTS

TEMPERATURE SWITCH, NORMALLY CLOSED OPENS ON TEMPERATURE INCREASE

TEMPERATURE SWITCH, NORMALLY OPEN CLOSES ON TEMPERATURE INCREASE

METAL OXIDE VARISTOR
MOV

DIODE

TANDEM TERMINAL BLOCK

PANEL TERMINAL BLOCK

JUNCTION BOX TERMINAL BLOCK

CUSTOMER TERMINAL BLOCK

FUSED TERMINAL BLOCK

TOGGLE SWITCH, NORMALLY OPEN

TEMPERATURE SWITCH, NORMALLY OPEN
CLOSES ON TEMPERATURE INCREASE

PUSH BUTTON, NORMALLY CLOSED

PUSH BUTTON, NORMALLY OPEN

TEMPERATURE SWITCH, NORMALLY OPEN
CLOSES ON TEMPERATURE INCREASE

SELECTOR SWITCH, 2 POSITION
2 NORMALLY OPEN

H A
HAND
AUTO

SELECTOR SWITCH, 3 POSITION
2 NORMALLY OPEN

X

PILOT LIGHT, PUSH-TO-TEST
X=COLOUR

X

PILOT LIGHT, X=COLOUR

A - AMBER
B - BLUE
G - GREEN
R - RED
W - WHITE

BEACON LIGHT
X=COLOR

CONTACT, NORMALLY CLOSED

CONTACT, NORMALLY OPEN

TIME DELAY CONTACT, INSTANTANEOUS OPEN
TIMED CLOSED ON DE-ENERGIZE

TIME DELAY CONTACT, INSTANTANEOUS CLOSE
TIMED OPEN ON DE-ENERGIZE

TIME DELAY CONTACT, INSTANTANEOUS OPEN
TIMED CLOSE ON ENERGIZE

TIME DELAY CONTACT, INSTANTANEOUS CLOSE
TIMED OPEN ON ENERGIZE

COIL - RELAY, CONTACTOR
TIMER, MOTOR STARTER

ANNUNCIATOR, HORN

ANNUNCIATOR, BUZZER

BATTERY

TRANSMITTER, 2 WIRE
LOOP POWERED

INTRINSICALLY SAFE BARRIERS

4 CHANNEL DISCRETE

IN1
IN2
IN3
IN4

2 CHANNEL ANALOG

IN1
IN2

AM

PANEL METER
AM=AMMETER
VM=VOLT METER

ETM

ELAPSED TIME METER

CURRENT TRANSFORMER

GROUND

INSTRUMENTATION GROUND

GND0429A

SOLENOID

CURRENT SWITCH

FUSED DISCONNECT
X=AMP RATING

FUSE, X=AMP RATING

CIRCUIT BREAKER
X=AMP RATING

COMBINATION STARTER
X-X AMP=CURRENT RANGE

CONTACTOR

DISTRIBUTION BLOCK

M

3 PHASE MOTOR

HTR

3 PHASE HEATER

RECEPTACLE, SINGLE OUTLET

RECEPTACLE, DUPLEX

HV
LV

TRANSFORMER
CONTROL POWER
(NOT REPRESENTATIVE OF ALL TYPES)

HV
LV

TRANSFORMER
DISTRIBUTION/LIGHTING
(NOT REPRESENTATIVE OF ALL TYPES)

DC POWER SUPPLY
(NOT REPRESENTATIVE OF ALL TYPES)
(NOT TO SCALE)

REACTOR

CR0917C

CROSS REFERENCE TABLE

Line Voltage
Motor

VARIABLE FREQUENCY DRIVE
(NOT REPRESENTATIVE
OF ALL TYPES)
(NOT TO SCALE)

GENERAL PURPOSE WIRING
INTERNAL TO PANEL

GENERAL PURPOSE WIRING
EXTERNAL TO PANEL

CL1 DIV2 WIRING
EXTERNAL TO PANEL

WIRING BY OTHERS
EXTERNAL TO PANEL

USA 3 PHASE
POWER WIRING COLOR CODE

480V	208/230V (HIGH LEG)
PHASE A - BROWN	PHASE A - BLACK
PHASE B - ORANGE	PHASE B - RED(ORG)
PHASE C - YELLOW	PHASE C - BLUE

CANADIAN 3 PHASE
POWER WIRING COLOUR CODE

PHASE A - RED
PHASE B - BLACK
PHASE C - BLUE

NOTES:
1) UNLESS OTHERWISE STATED, ALL WIRING EXTERNAL TO PANELS IS #12AWG.

newterra

1291 CALIFORNIA AVE.
BROCKVILLE ONTARIO
CANADA K6V 5Y6

PHONE: 1-800-420-4056
www.newterra.com

LEVEL	REVISION	DATE (dd/mm/yy)	BY
C	AS BUILT	06/09/2019	DMB
B	FOR PRODUCTION	01/08/2019	DMB
A1	FOR REVIEW	30/07/2019	DMB

PROJ. NO: 1905884

TITLE AND LOCATION: ELECTRICAL LEGEND

CUSTOMER: Agnico Eagle Mines
Agnico Eagle Volute

SCALE	SHEET	SHEETS
NTS	4	25

THIS INFORMATION IS THE PROPERTY OF newterra ltd. AND CANNOT BE REUSED OR REPRODUCED WITHOUT THE WRITTEN CONSENT OF newterra ltd.

CUSTOMER POWER SUPPLY
SEE SPECIFICATION PAGE

#8AWG

MPP

DISC0705A
MAIN DISC
GS2GU3N
60A
40A

PDB0713A

MPDB67533

SPD0717A
SURGE
SDSA3650

DISC0724A
FAN-901
CCP2-3-30CC
30A
15A

CON1354A
F-M901
LC1D09BD

CON1362A
F-SP901
LC1D09BD

OL0724A
F-M901
0.1A to 0.16A
LRD01

OL0730A
F-SP901
0.1A to 0.16A
LRD01

CL1122A
LUALB1

STR1368A
M-0902
0.35-1.4A
LUCA1XBL

DISC0751A
120V POWER
CCP2-2-30CC
30A
15A

DISC0764A
H-7911
CCP2-3-30CC
30A
15A

DISC0770A
H-7912
CCP2-3-30CC
30A
15A

DISC0805A
P-901
CCP2-3-30CC
30A
6A

DISC0814A
M-901
CCP2-3-30CC
30A
6A

DISC0823A
SP-901
CCP2-3-30CC
30A
6A

ACR0805A
P-901
RLW-04P805

ACR0814A
M-901
RLW-04P805

ACR0823A
SP-901
RLW-04P805

LV POWER

VFD0612A
P-901
ATV630U22S6X
VFD

VFD0620A
M-901
ATV630U22S6X
VFD

VFD0629A
SP-901
ATV630U22S6X
VFD

BLD-7910 - General Purpose Area

120V POWER
T0753A
5 KVA
Q005PEKF
600V
120/240V

H|-7911

10 kW
12 AWG
9.62A
OAS10036T
0234O/0764B

H|-7912

10 kW
12 AWG
9.62A
OAS10036T
0234P/0770B

MPP

OL0805A
M-901
0.4A to 0.63A
LRD04

OL0814A
SP-901
0.4A to 0.63A
LRD04

M

F|-M901

29W
#12AWG
0.03A
0724A

M

F|-SP901

29W
#12AWG
0.03A
0730A

M

M|-0902
DELTA
PG-2
1/2HP
#12AWG
0.8A
0744B

M

P|-0901
Moyno
33301
1hp
#12AWG
1.4A

M

M|-901
VOLUTE
INCLUDED WITH MYDL-131
0.18 kW (1/4 HP)
#12AWG
0.42A
0814A

M

SP|901
VOLUTE
MYDL-131
0.18 kW (1/4 HP)
#12AWG
0.42A
0823A

NOTES:

1291 CALIFORNIA AVE.
BROCKVILLE ONTARIO
CANADA K6V 5Y6

PHONE: 1-800-420-4056
www.newterra.com

LEVEL	REVISION	DATE (dd/mm/yy)	BY
C	AS BUILT	06/09/2019	DMB
B	FOR PRODUCTION	01/08/2019	DMB
A1	FOR REVIEW	30/07/2019	DMB

PROJ. NO: 1905884

TITLE AND LOCATION: SINGLE LINE DIAGRAM

CUSTOMER: Agnico Eagle Mines
Agnico Eagle Volute

SCALE	SHEET	SHEETS
NTS	5	25

THIS INFORMATION IS THE PROPERTY OF newterra ltd. AND CANNOT BE REUSED OR REPRODUCED WITHOUT THE WRITTEN CONSENT OF newterra ltd.

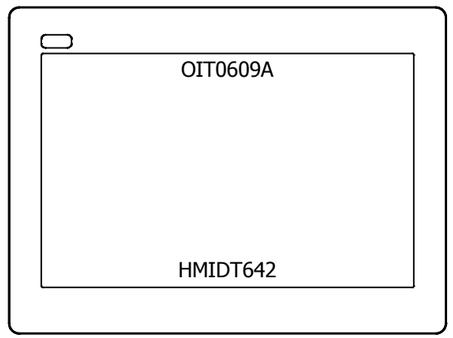

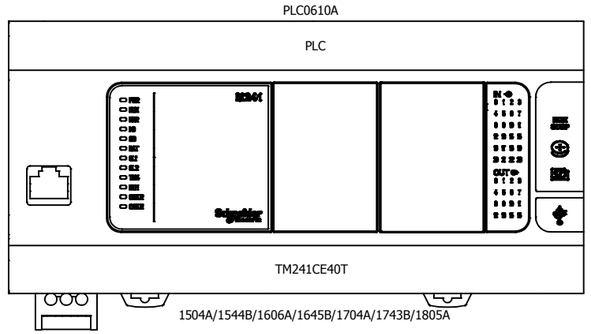

Name:	OIT0609A HMI
Address:	192.168.13.101
SNM:	255.255.255.0
Ethernet	

HMIDT642

CBL2

Name:	PLC0610A PLC
Address:	192.168.13.100
SNM:	255.255.255.0
Ethernet	

TM241CE40T

CBL3

ETH0624A
17-110024

C5E-STPRD-S10

CBL5

SEE NOTE 1

OIT0609A
HMI

HMIDT642

CBL4

USB0627A
17-200161

USB A_A

SEE NOTE 1

C5E-STPRD-S10

Name:	ETH0631A
Address:	
SNM:	
Ethernet Switch	

ETH0631A
TCSESU053FN0

0631A/1325A

1325A

TCSESU053FN0

ETH0632A
EC6133D

Name:	ETH0632A
Address:	192.168.13.1
SNM:	255.255.255.0
Ethernet Switch	

EC6133D

C5E-STPRD-S3

C5E-STPRD-S7

CBL8

BLD-7910 - General Purpose Area

VFD0612A
P-901
ATV630U22S6X

0805A

Name:	VFD0612A P-901
Address:	192.168.13.111
SNM:	255.255.255.0
Ethernet	

ATV630U22S6X

CBL1

VFD0620A
M-901
ATV630U22S6X

0814A

Name:	VFD0620A M-901
Address:	192.168.13.112
SNM:	255.255.255.0
Ethernet	

ATV630U22S6X

CBL6

VFD0629A
SP-901
ATV630U22S6X

0823A

Name:	VFD0629A SP-901
Address:	192.168.13.113
SNM:	255.255.255.0
Ethernet	

ATV630U22S6X

CBL7

CONTROL WIRING LEGEND

BLACK:	POWER
RED:	120VAC CONTROL
WHITE:	NEUTRAL
BLUE:	+24VDC & IS WIRING
BLU/WHT:	0VDC
YELLOW:	INTERLOCKS

NOTES:

1) CONNECTOR PORT IS MEANT FOR MAINTENANCE AND TROUBLESHOOTING OF CONTROLS ONLY, THE CAP OF THE CONNECTOR PORT NEEDS TO BE INSTALLED TO MAINTAIN ITS NEMA 4/4X RATING.

newterra
1291 CALIFORNIA AVE.
BROCKVILLE ONTARIO
CANADA K6V 5Y6
PHONE: 1-800-420-4056
www.newterra.com

LEVEL	REVISION	DATE (dd/mm/yy)	BY
C	AS BUILT	06/09/2019	DMB
B	FOR PRODUCTION	01/08/2019	DMB
A1	FOR REVIEW	30/07/2019	DMB

PROJ. NO: 1905884

TITLE AND LOCATION: PLC COMMUNICATIONS/LAYOUT

MCP

CUSTOMER: Agnico Eagle Mines
Agnico Eagle Volute

SCALE: NTS | SHEET: 6 | SHEETS: 25

THIS INFORMATION IS THE PROPERTY OF newterra ltd. AND CANNOT BE REUSED OR REPRODUCED WITHOUT THE WRITTEN CONSENT OF newterra ltd.

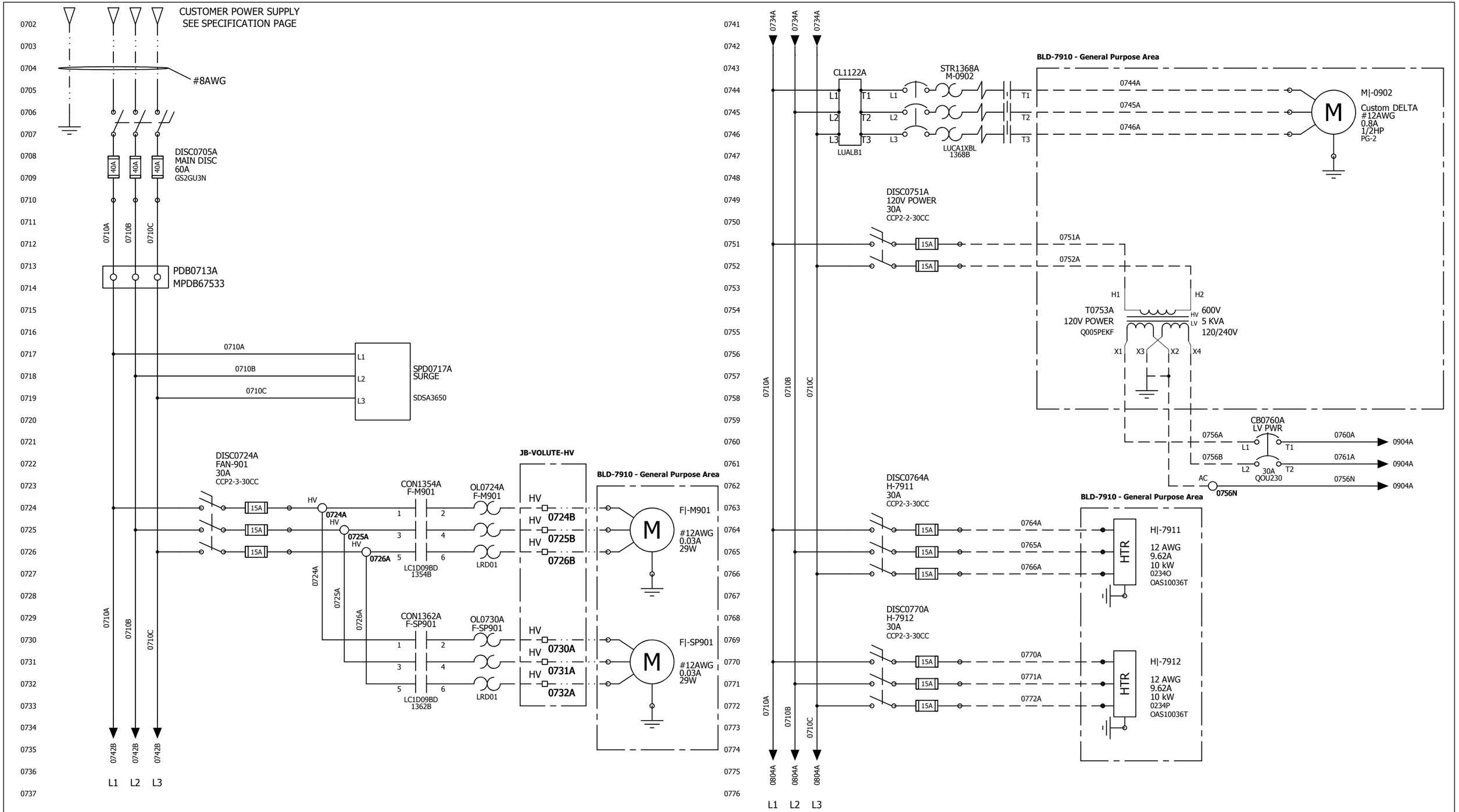

CONTROL WIRING LEGEND

BLACK:	POWER
RED:	120VAC CONTROL
WHITE:	NEUTRAL
BLUE:	+24VDC & IS WIRING
BLU/WHT:	0VDC
YELLOW:	INTERLOCKS

NOTES:

newterra

1291 CALIFORNIA AVE.
BROCKVILLE ONTARIO
CANADA K6V 5Y6

PHONE: 1-800-420-4056
www.newterra.com

LEVEL	REVISION	DATE (dd/mm/yy)	BY
C	AS BUILT	06/09/2019	DMB
B	FOR PRODUCTION	01/08/2019	DMB
A1	FOR REVIEW	30/07/2019	DMB

PROJ. NO: 1905884

TITLE AND LOCATION: 600V POWER DISTRIBUTION

MPP

CUSTOMER: Agnico Eagle Mines
Agnico Eagle Volute

SCALE	SHEET	SHEETS
NTS	7	25

THIS INFORMATION IS THE PROPERTY OF newterra ltd. AND CANNOT BE REUSED OR REPRODUCED WITHOUT THE WRITTEN CONSENT OF newterra ltd.

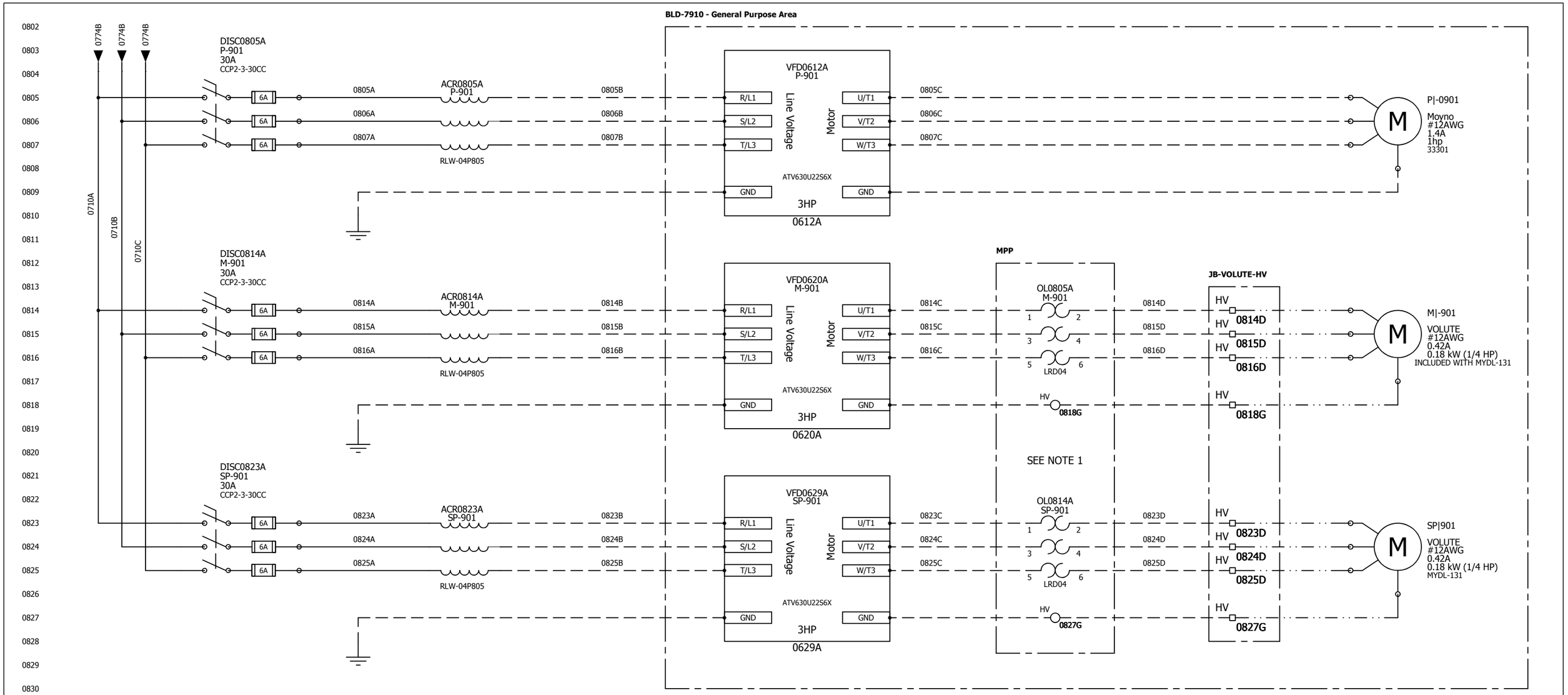

CONTROL WIRING LEGEND

BLACK:	POWER
RED:	120VAC CONTROL
WHITE:	NEUTRAL
BLUE:	+24VDC & IS WIRING
BLU/WHT:	0VDC
YELLOW:	INTERLOCKS

NOTES:

1) LRD03 OVERLOAD RELAY IS ALSO SUPPLIED LOOSE IN BOTTOM OF PANEL, TO BE USED INSTEAD OF LRD04, IF THE ACTUAL FLA OF THE MOTOR IS TOO SMALL FOR THE OVERLOAD.

newterra

1291 CALIFORNIA AVE.
BROCKVILLE ONTARIO
CANADA K6V 5Y6

PHONE: 1-800-420-4056
www.newterra.com

LEVEL	REVISION	DATE (dd/mm/yy)	BY
C	AS BUILT	06/09/2019	DMB
B	FOR PRODUCTION	01/08/2019	DMB
A1	FOR REVIEW	30/07/2019	DMB

PROJ. NO: 1905884

TITLE AND LOCATION: 600V POWER DISTRIBUTION

MPP

CUSTOMER: Agnico Eagle Mines
Agnico Eagle Volute

SCALE	SHEET	SHEETS
NTS	8	25

THIS INFORMATION IS THE PROPERTY OF newterra ltd. AND CANNOT BE REUSED OR REPRODUCED WITHOUT THE WRITTEN CONSENT OF newterra ltd.

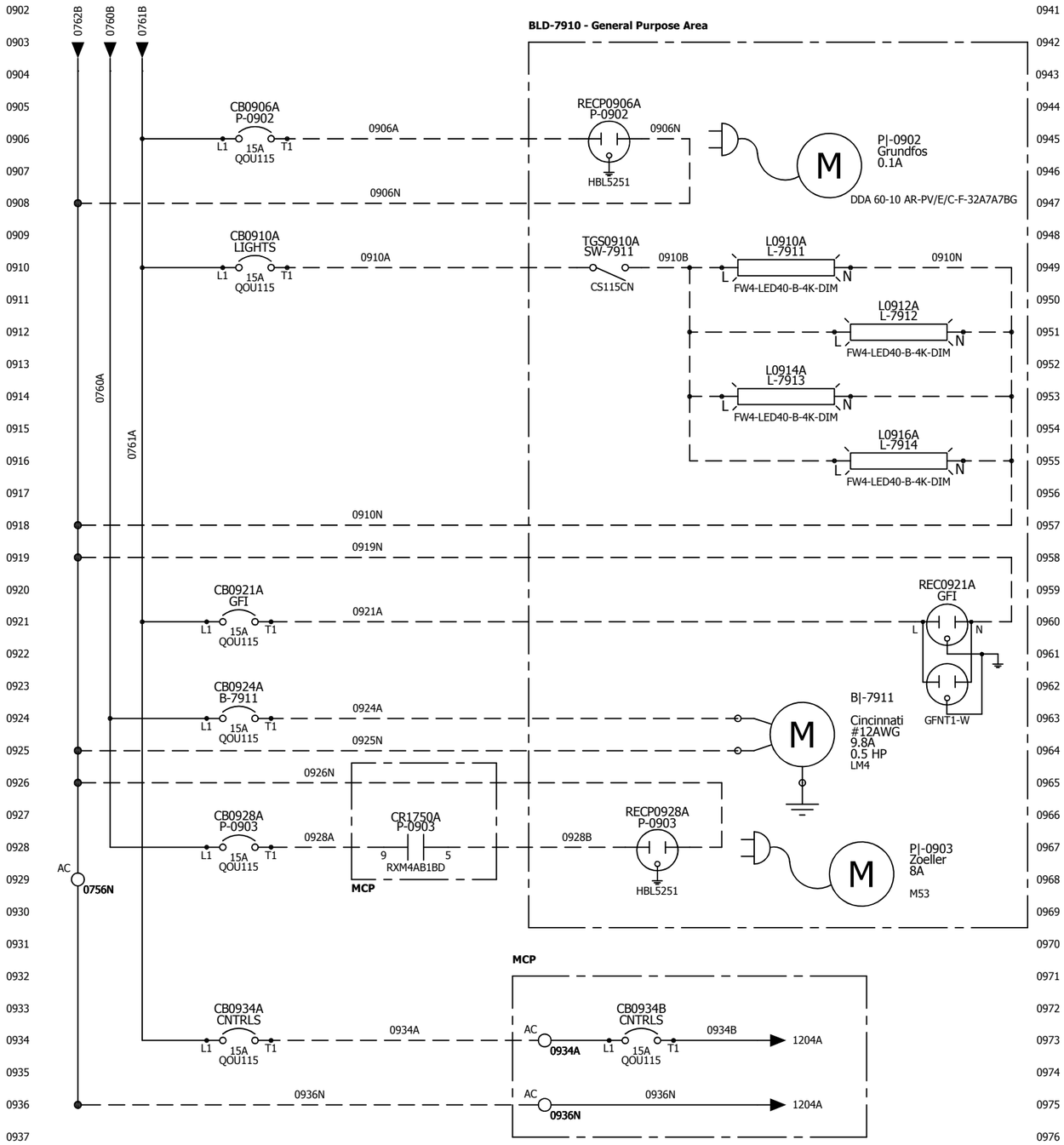

INTENTIONALLY BLANK

CONTROL WIRING LEGEND

BLACK:	POWER
RED:	120VAC CONTROL
WHITE:	NEUTRAL
BLUE:	+24VDC & IS WIRING
BLU/WHT:	0VDC
YELLOW:	INTERLOCKS

NOTES:

newterra

1291 CALIFORNIA AVE.
BROCKVILLE ONTARIO
CANADA K6V 5Y6

PHONE: 1-800-420-4056
www.newterra.com

LEVEL	REVISION	DATE (dd/mm/yy)	BY
C	AS BUILT	06/09/2019	DMB
B	FOR PRODUCTION	01/08/2019	DMB
A1	FOR REVIEW	30/07/2019	DMB

PROJ. NO: 1905884

TITLE AND LOCATION: 120/240V POWER DISTRIBUTION

MPP

CUSTOMER: Agnico Eagle Mines
Agnico Eagle Volute

SCALE	SHEET	SHEETS
NTS	9	25

THIS INFORMATION IS THE PROPERTY OF newterra ltd. AND CANNOT BE REUSED OR REPRODUCED WITHOUT THE WRITTEN CONSENT OF newterra ltd.

INTENTIONALLY BLANK

INTENTIONALLY BLANK

CONTROL WIRING LEGEND

BLACK:	POWER
RED:	120VAC CONTROL
WHITE:	NEUTRAL
BLUE:	+24VDC & IS WIRING
BLU/WHT:	0VDC
YELLOW:	INTERLOCKS

NOTES:

1291 CALIFORNIA AVE.
BROCKVILLE ONTARIO
CANADA K6V 5Y6

PHONE: 1-800-420-4056
www.newterra.com

LEVEL	REVISION	DATE (dd/mm/yy)	BY
C	AS BUILT	06/09/2019	DMB
B	FOR PRODUCTION	01/08/2019	DMB
A1	FOR REVIEW	30/07/2019	DMB

PROJ. NO: 1905884

TITLE AND LOCATION: SPARE SHEET

MPP

CUSTOMER: Agnico Eagle Mines
Agnico Eagle Volute

SCALE	SHEET	SHEETS
NTS	10	25

THIS INFORMATION IS THE PROPERTY OF newterra ltd. AND CANNOT BE REUSED OR REPRODUCED WITHOUT THE WRITTEN CONSENT OF newterra ltd.

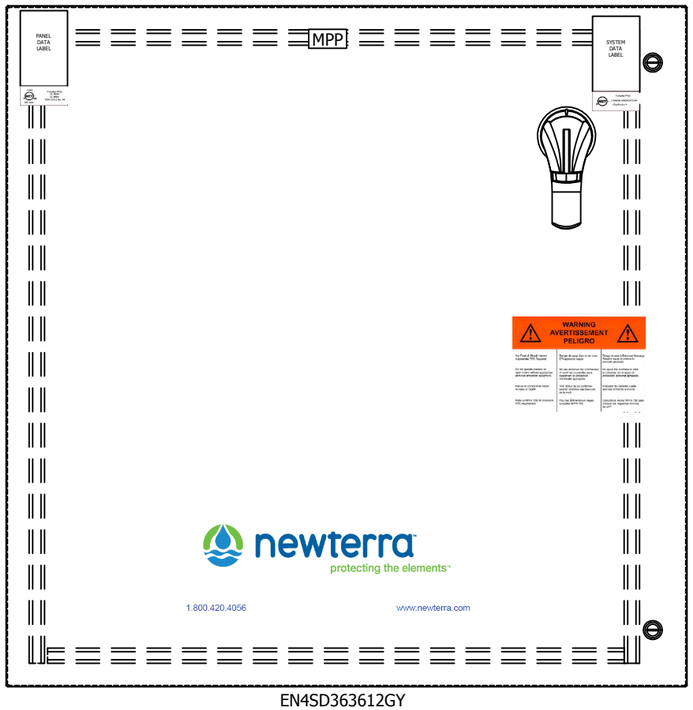

EN4SD363612GY

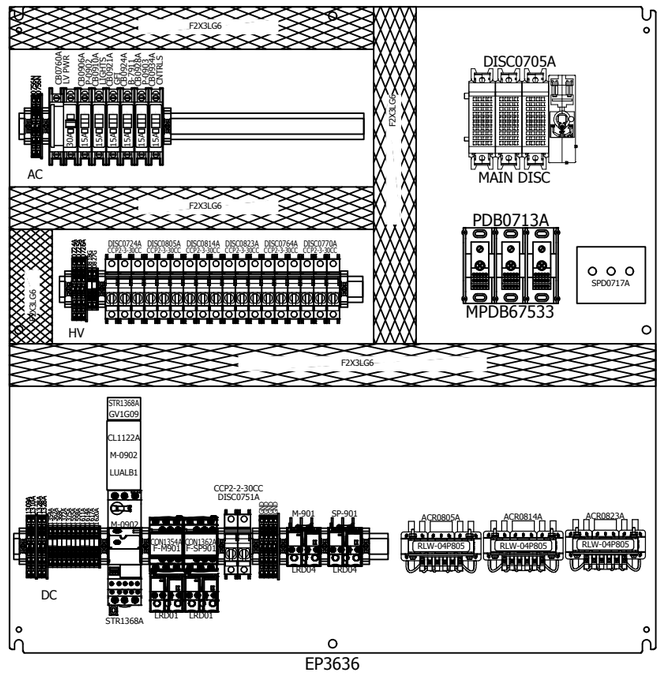

EP3636

NOTES:

newterra
1291 CALIFORNIA AVE.
BROCKVILLE ONTARIO
CANADA K6V 5Y6
PHONE: 1-800-420-4056
www.newterra.com

LEVEL	REVISION	DATE (dd/mm/yy)	BY
C	AS BUILT	06/09/2019	DMB
B	FOR PRODUCTION	01/08/2019	DMB
A1	FOR REVIEW	30/07/2019	DMB

PROJ. NO: 1905884

TITLE AND LOCATION: MPP PANEL LAYOUT

MPP

CUSTOMER: Agnico Eagle Mines
Agnico Eagle Volute

SCALE	SHEET	SHEETS
1 : 8	11	25

THIS INFORMATION IS THE PROPERTY OF newterra ltd. AND CANNOT BE REUSED OR REPRODUCED WITHOUT THE WRITTEN CONSENT OF newterra ltd.

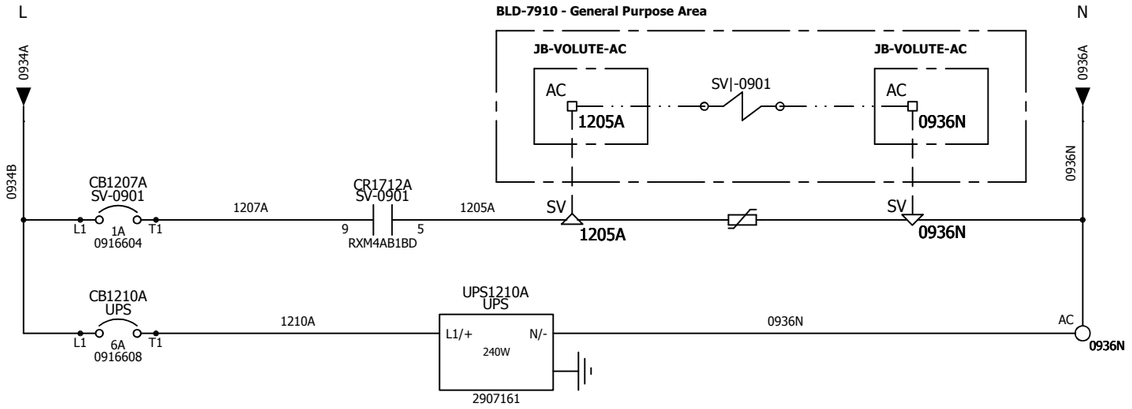

INTENTIONALLY BLANK

CONTROL WIRING LEGEND

BLACK:	POWER
RED:	120VAC CONTROL
WHITE:	NEUTRAL
BLUE:	+24VDC & IS WIRING
BLU/WHT:	0VDC
YELLOW:	INTERLOCKS

NOTES:

1291 CALIFORNIA AVE.
BROCKVILLE ONTARIO
CANADA K6V 5Y6

PHONE: 1-800-420-4056
www.newterra.com

LEVEL	REVISION	DATE (dd/mm/yy)	BY
C	AS BUILT	06/09/2019	DMB
B	FOR PRODUCTION	01/08/2019	DMB
A1	FOR REVIEW	30/07/2019	DMB

PROJ. NO: 1905884

TITLE AND LOCATION: 120V CONTROL POWER

MCP

CUSTOMER: Agnico Eagle Mines
Agnico Eagle Volute

SCALE	SHEET	SHEETS
NTS	12	25

THIS INFORMATION IS THE PROPERTY OF newterra ltd. AND CANNOT BE REUSED OR REPRODUCED WITHOUT THE WRITTEN CONSENT OF newterra ltd.

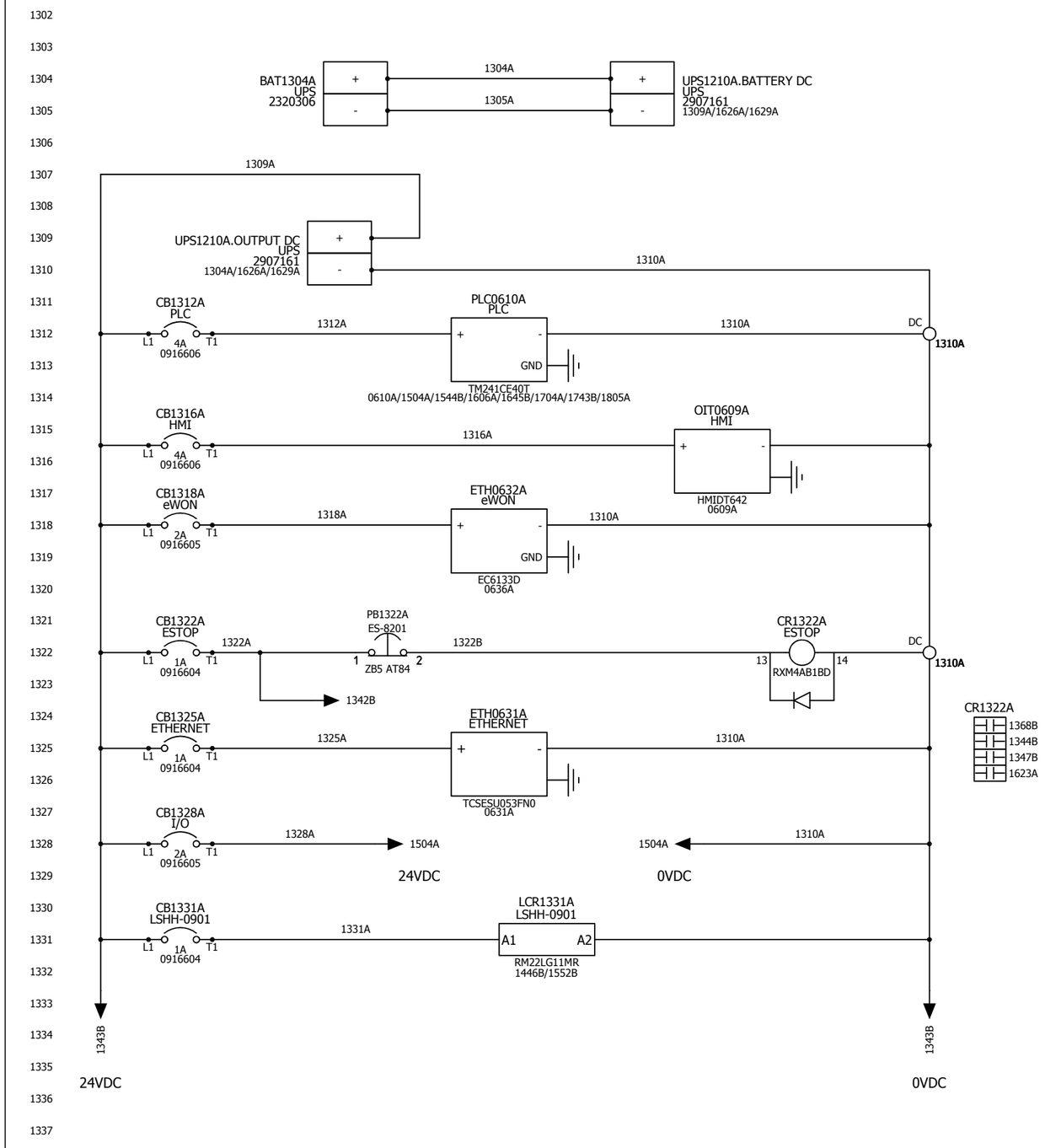

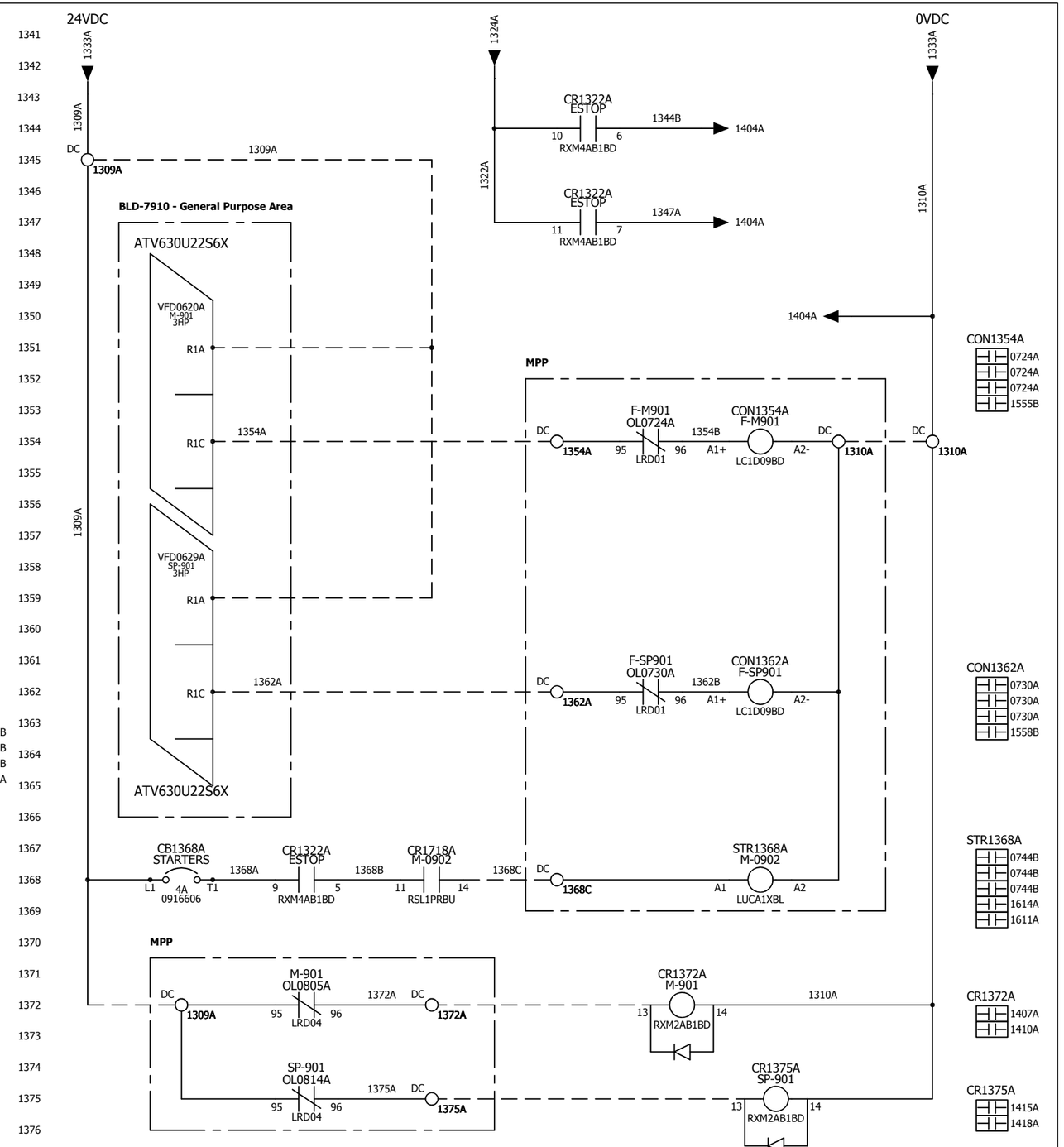

CONTROL WIRING LEGEND

BLACK:	POWER
RED:	120VAC CONTROL
WHITE:	NEUTRAL
BLUE:	+24VDC & IS WIRING
BLU/WHT:	0VDC
YELLOW:	INTERLOCKS

NOTES:

newterra

1291 CALIFORNIA AVE.
BROCKVILLE ONTARIO
CANADA K6V 5Y6

PHONE: 1-800-420-4056
www.newterra.com

LEVEL	REVISION	DATE (dd/mm/yy)	BY
C	AS BUILT	06/09/2019	DMB
B	FOR PRODUCTION	01/08/2019	DMB
A1	FOR REVIEW	30/07/2019	DMB

PROJ. NO: 1905884

TITLE AND LOCATION: 24VDC CONTROL POWER — MCP

CUSTOMER: Agnico Eagle Mines — Agnico Eagle Volute

SCALE	SHEET	SHEETS
NTS	13	25

THIS INFORMATION IS THE PROPERTY OF newterra ltd. AND CANNOT BE REUSED OR REPRODUCED WITHOUT THE WRITTEN CONSENT OF newterra ltd.

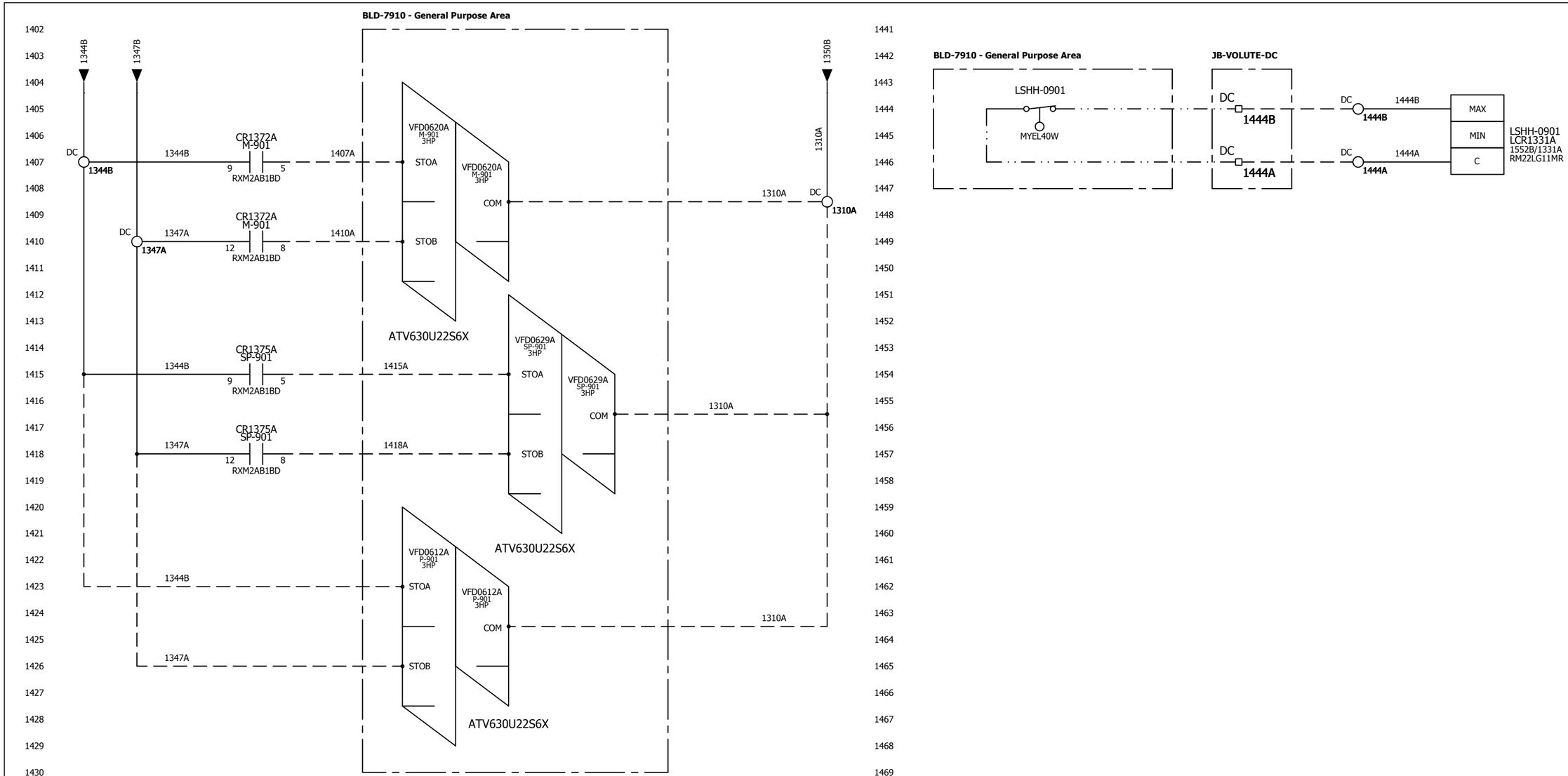

CONTROL WIRING LEGEND

BLACK:	POWER
RED:	120VAC CONTROL
WHITE:	NEUTRAL
BLUE:	+24VDC & IS WIRING
BLU/WHT:	0VDC
YELLOW:	INTERLOCKS

NOTES:

1291 CALIFORNIA AVE.
BROCKVILLE ONTARIO
CANADA K6V 5Y6

PHONE: 1-800-420-4056
www.newterra.com

LEVEL	REVISION	DATE (dd/mm/yy)	BY
C	AS BUILT	06/09/2019	DMB
B	FOR PRODUCTION	01/08/2019	DMB
A1	FOR REVIEW	30/07/2019	DMB

PROJ. NO: 1905884

TITLE AND LOCATION: VFD ESTOP CIRCUIT

MCP

CUSTOMER: Agnico Eagle Mines
Agnico Eagle Volute

SCALE	SHEET	SHEETS
NTS	14	25

THIS INFORMATION IS THE PROPERTY OF newterra ltd. AND CANNOT BE REUSED OR REPRODUCED WITHOUT THE WRITTEN CONSENT OF newterra ltd.

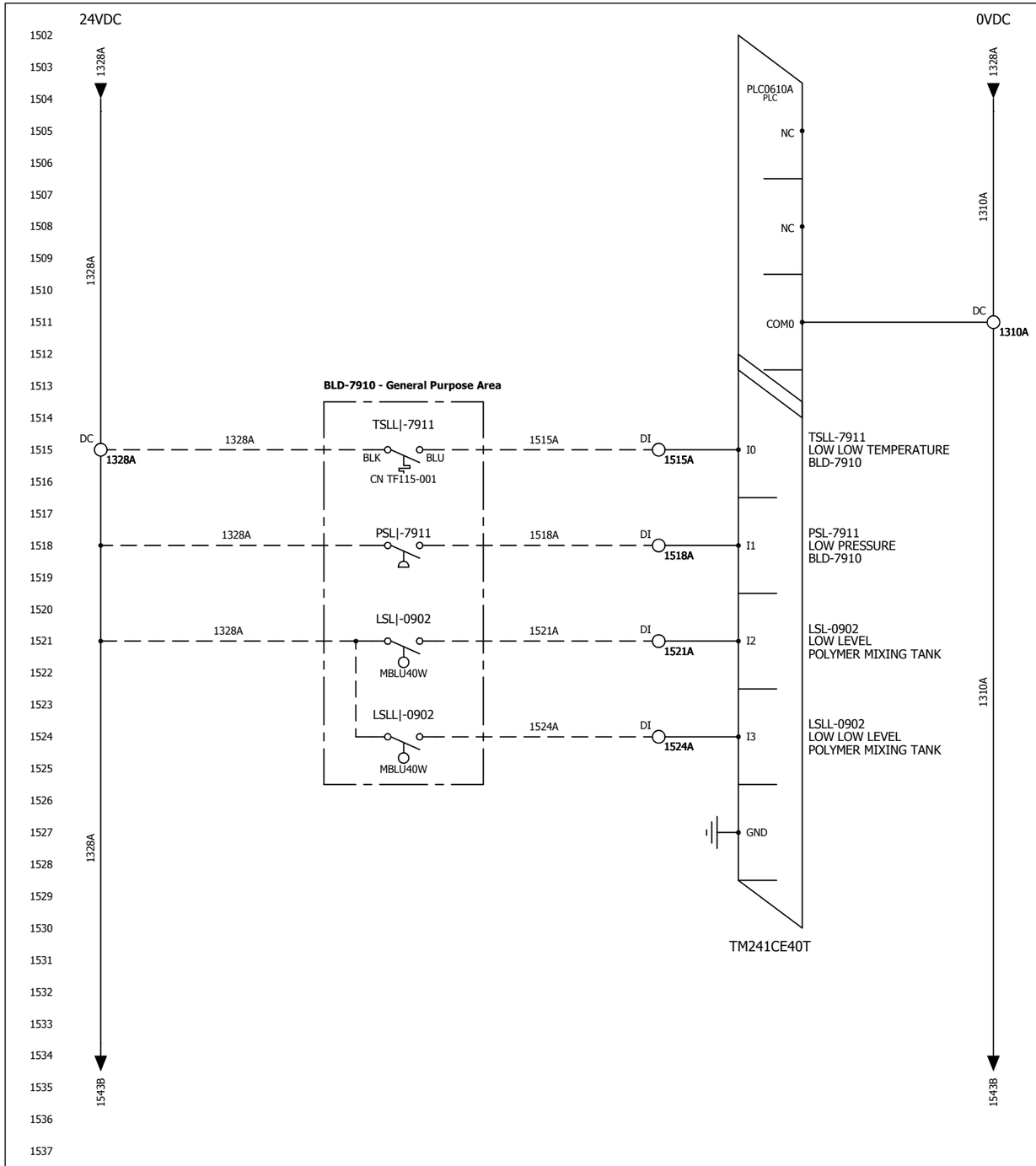

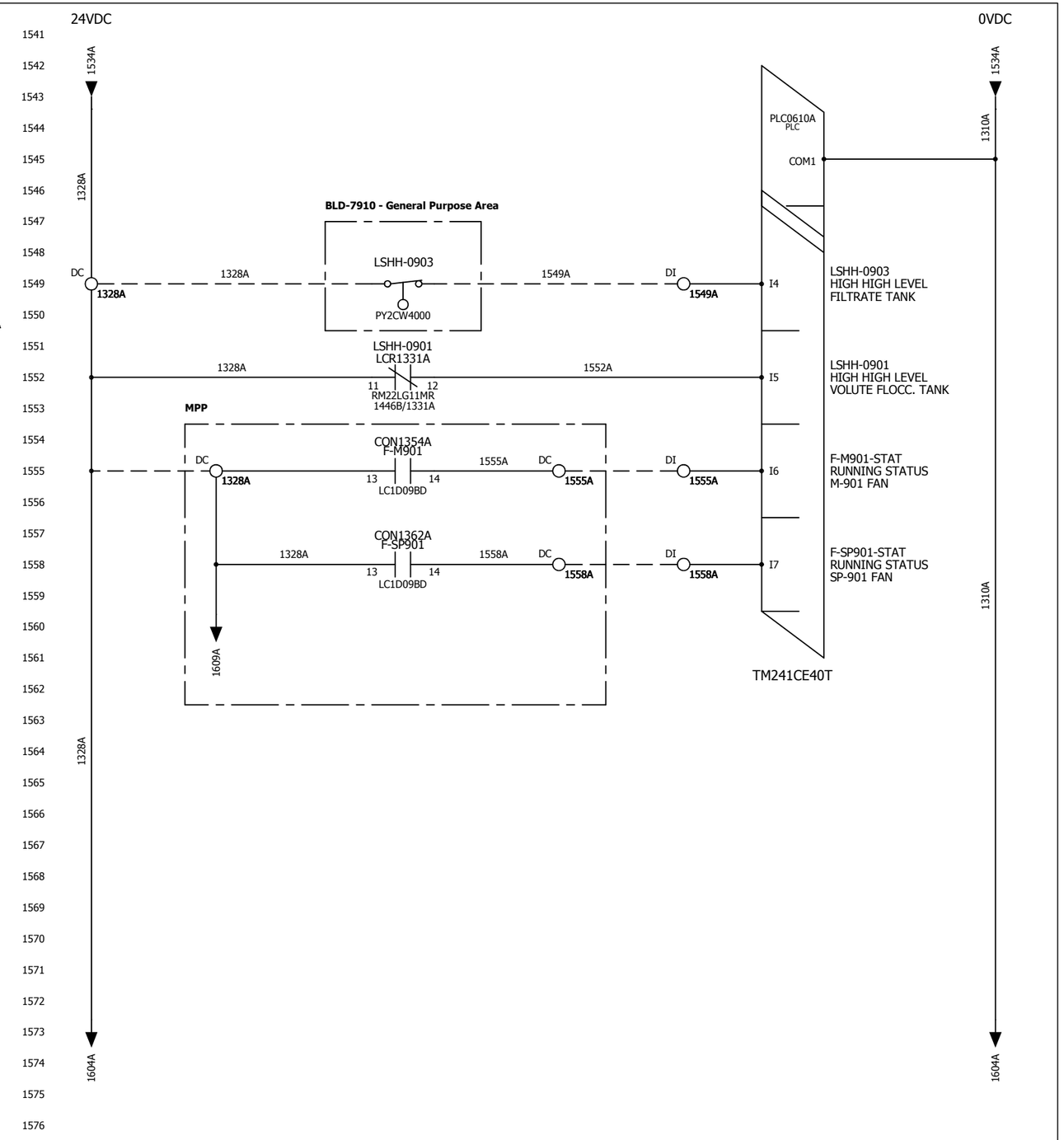

CONTROL WIRING LEGEND

BLACK:	POWER
RED:	120VAC CONTROL
WHITE:	NEUTRAL
BLUE:	+24VDC & IS WIRING
BLU/WHT:	0VDC
YELLOW:	INTERLOCKS

NOTES:

newterra

1291 CALIFORNIA AVE.
BROCKVILLE ONTARIO
CANADA K6V 5Y6

PHONE: 1-800-420-4056
www.newterra.com

LEVEL	REVISION	DATE (dd/mm/yy)	BY
C	AS BUILT	06/09/2019	DMB
B	FOR PRODUCTION	01/08/2019	DMB
A1	FOR REVIEW	30/07/2019	DMB

PROJ. NO: 1905884

TITLE AND LOCATION:
DISCRETE INPUTS
PLC BASE
MCP

CUSTOMER:
Agnico Eagle Mines
Agnico Eagle Volute

SCALE	SHEET	SHEETS
NTS	15	25

THIS INFORMATION IS THE PROPERTY OF newterra ltd. AND CANNOT BE REUSED OR REPRODUCED WITHOUT THE WRITTEN CONSENT OF newterra ltd.

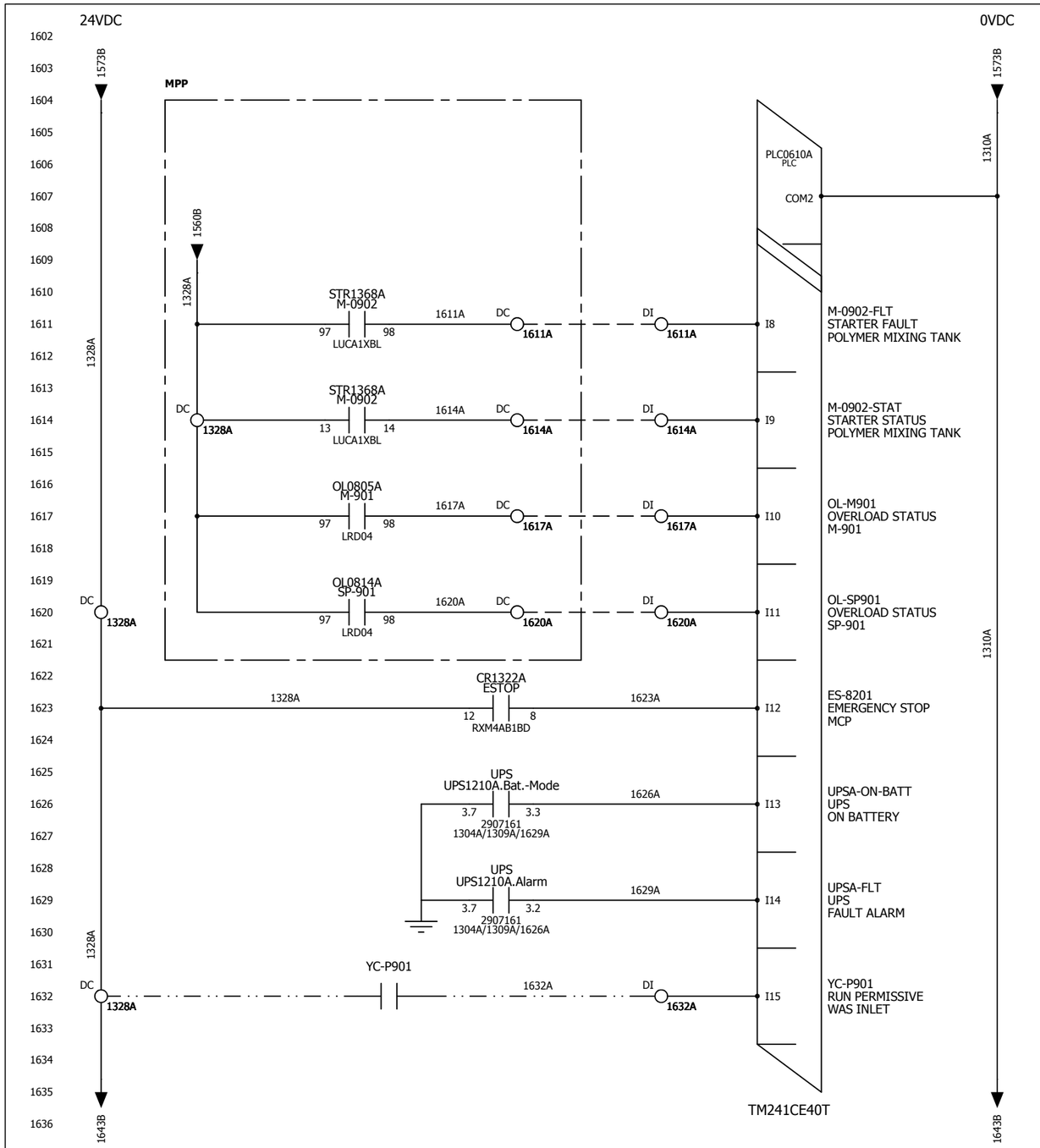

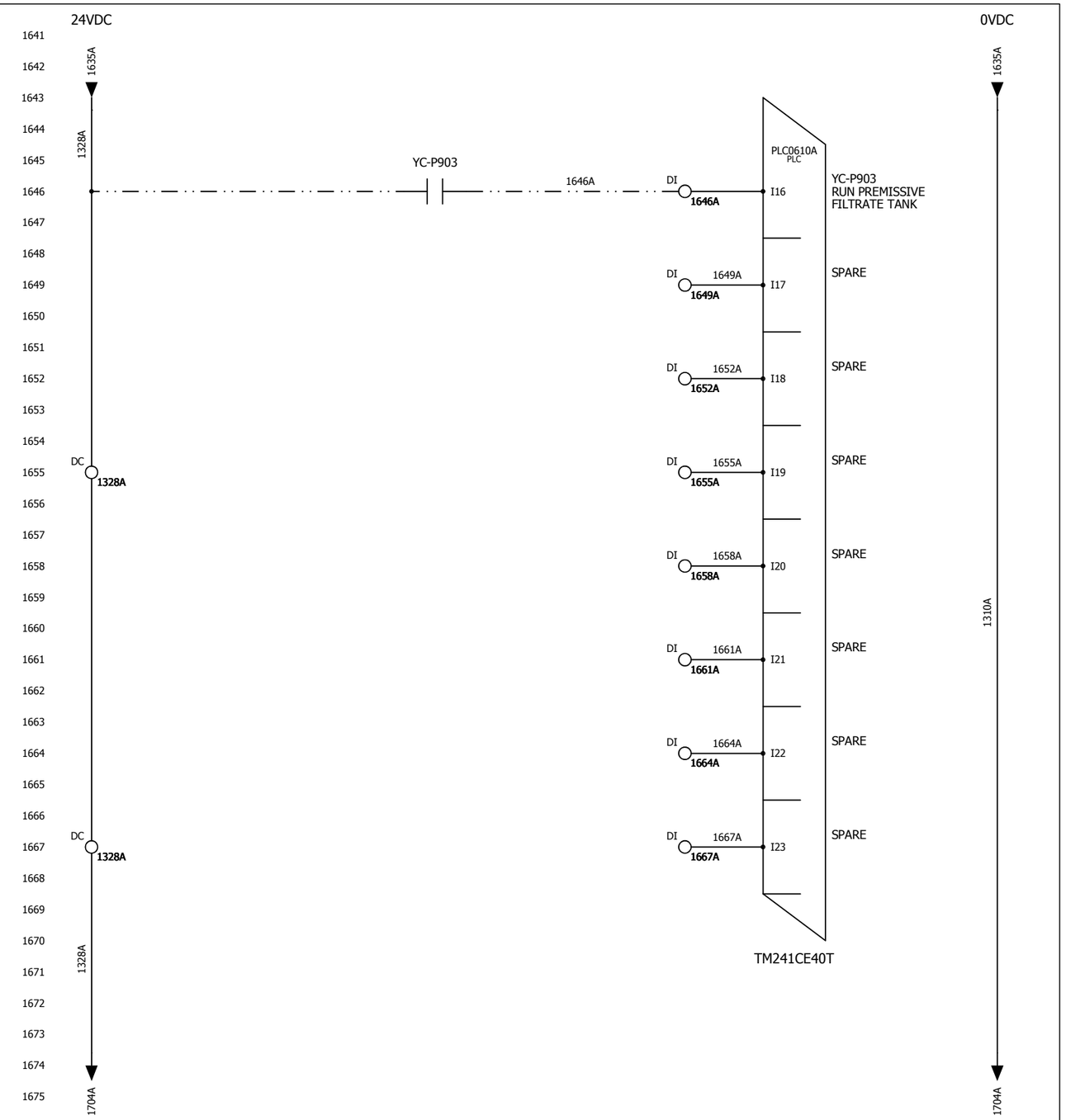

CONTROL WIRING LEGEND

BLACK:	POWER
RED:	120VAC CONTROL
WHITE:	NEUTRAL
BLUE:	+24VDC & IS WIRING
BLU/WHT:	0VDC
YELLOW:	INTERLOCKS

NOTES:

newterra

1291 CALIFORNIA AVE.
BROCKVILLE ONTARIO
CANADA K6V 5Y6

PHONE: 1-800-420-4056
www.newterra.com

LEVEL	REVISION	DATE (dd/mm/yy)	BY
C	AS BUILT	06/09/2019	DMB
B	FOR PRODUCTION	01/08/2019	DMB
A1	FOR REVIEW	30/07/2019	DMB

PROJ. NO: 1905884

TITLE AND LOCATION:
DISCRETE INPUTS
PLC BASE
MCP

CUSTOMER:
Agnico Eagle Mines
Agnico Eagle Volute

SCALE	SHEET	SHEETS
NTS	16	25

THIS INFORMATION IS THE PROPERTY OF newterra ltd. AND CANNOT BE REUSED OR REPRODUCED WITHOUT THE WRITTEN CONSENT OF newterra ltd.

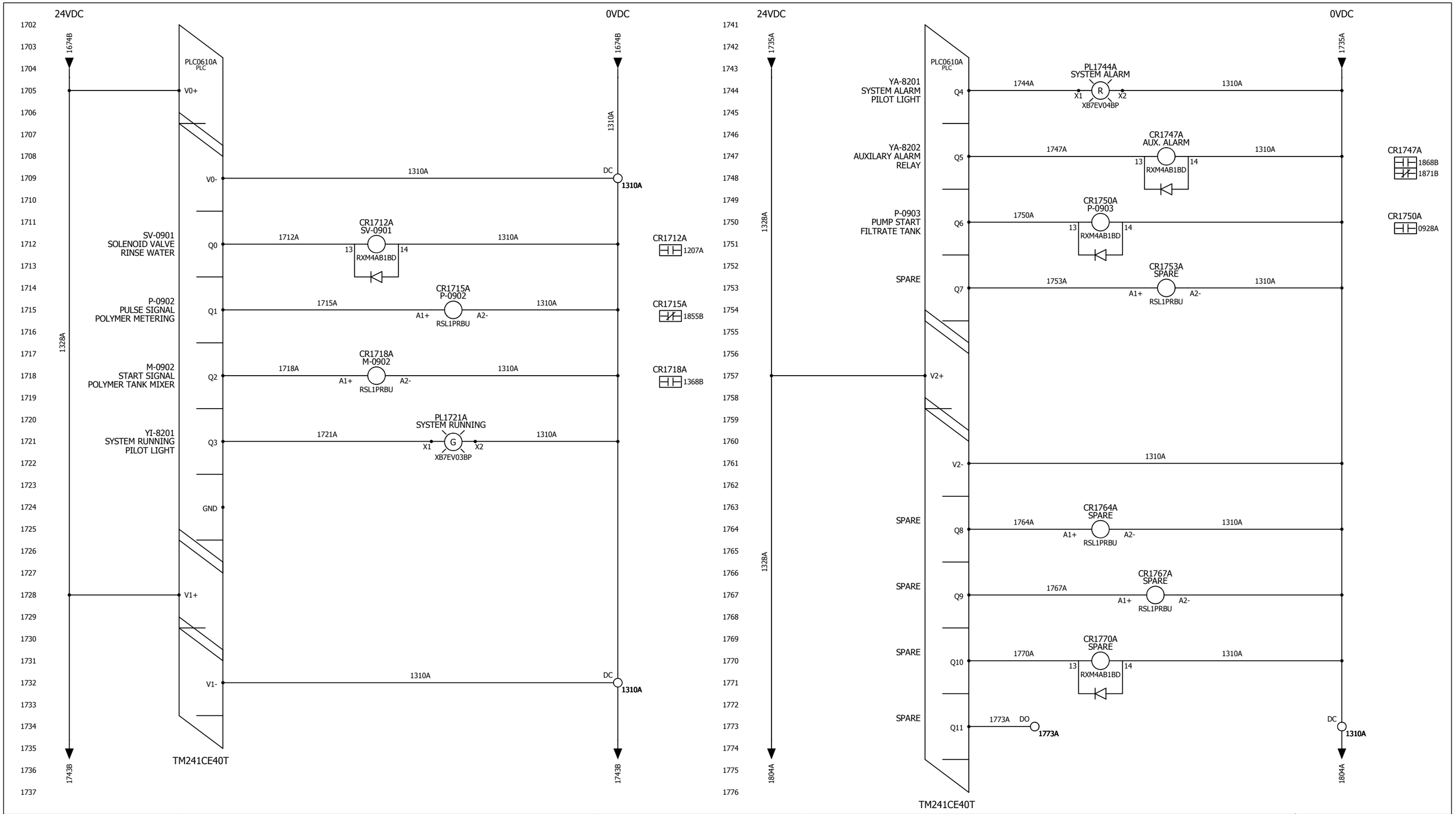

CONTROL WIRING LEGEND

BLACK:	POWER
RED:	120VAC CONTROL
WHITE:	NEUTRAL
BLUE:	+24VDC & IS WIRING
BLU/WHT:	0VDC
YELLOW:	INTERLOCKS

NOTES:

1291 CALIFORNIA AVE.
BROCKVILLE ONTARIO
CANADA K6V 5Y6

PHONE: 1-800-420-4056
www.newterra.com

LEVEL	REVISION	DATE (dd/mm/yy)	BY
C	AS BUILT	06/09/2019	DMB
B	FOR PRODUCTION	01/08/2019	DMB
A1	FOR REVIEW	30/07/2019	DMB

PROJ. NO: 1905884

TITLE AND LOCATION:
DISCRETE OUTPUTS
PLC BASE
MCP

CUSTOMER:
Agnico Eagle Mines
Agnico Eagle Volute

SCALE	SHEET	SHEETS
NTS	17	25

THIS INFORMATION IS THE PROPERTY OF newterra ltd. AND CANNOT BE REUSED OR REPRODUCED WITHOUT THE WRITTEN CONSENT OF newterra ltd.

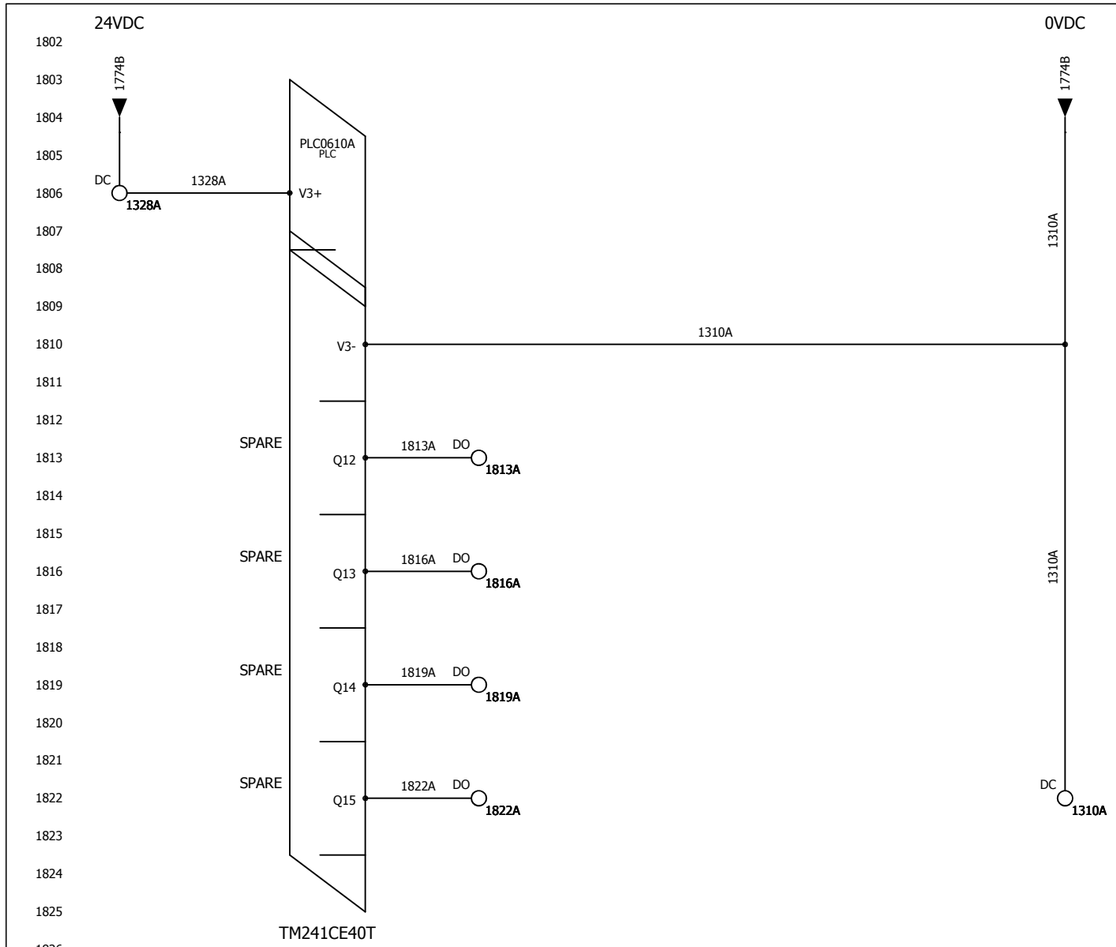

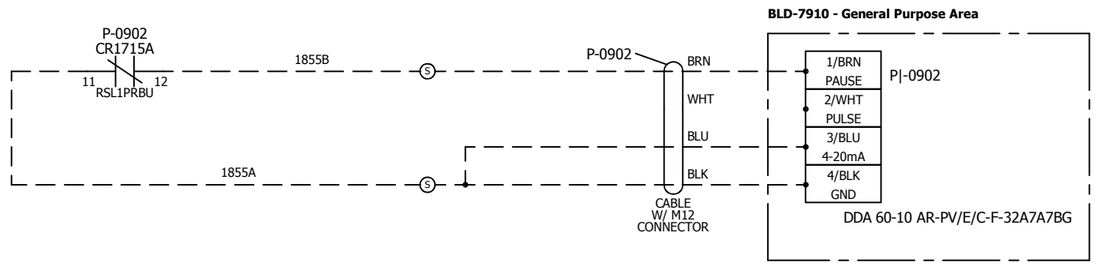

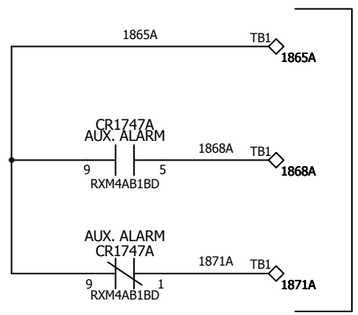

AUXILIARY
ALARM
CONTACTS

MOTOR RATED CONTACTS:
UP TO 1/3HP @ 120V
UP TO 1/2HP @ 277V
UP TO 8A @ 30VDC

CONTROL WIRING LEGEND

BLACK:	POWER
RED:	120VAC CONTROL
WHITE:	NEUTRAL
BLUE:	+24VDC & IS WIRING
BLU/WHT:	0VDC
YELLOW:	INTERLOCKS

NOTES:

1291 CALIFORNIA AVE.
BROCKVILLE ONTARIO
CANADA K6V 5Y6

PHONE: 1-800-420-4056
www.newterra.com

LEVEL	REVISION	DATE (dd/mm/yy)	BY
C	AS BUILT	06/09/2019	DMB
B	FOR PRODUCTION	01/08/2019	DMB
A1	FOR REVIEW	30/07/2019	DMB

PROJ. NO: 1905884

TITLE AND LOCATION:
DISCRETE OUTPUTS - PLC BASE
& MISC CONTROL
MCP

CUSTOMER:
Agnico Eagle Mines
Agnico Eagle Volute

SCALE	SHEET	SHEETS
NTS	18	25

THIS INFORMATION IS THE PROPERTY OF newterra ltd. AND CANNOT BE REUSED OR REPRODUCED WITHOUT THE WRITTEN CONSENT OF newterra ltd.

INTENTIONALLY BLANK

INTENTIONALLY BLANK

CONTROL WIRING LEGEND

BLACK:	POWER
RED:	120VAC CONTROL
WHITE:	NEUTRAL
BLUE:	+24VDC & IS WIRING
BLU/WHT:	0VDC
YELLOW:	INTERLOCKS

NOTES:

1291 CALIFORNIA AVE.
BROCKVILLE ONTARIO
CANADA K6V 5Y6

PHONE: 1-800-420-4056
www.newterra.com

LEVEL	REVISION	DATE (dd/mm/yy)	BY
C	AS BUILT	06/09/2019	DMB
B	FOR PRODUCTION	01/08/2019	DMB
A1	FOR REVIEW	30/07/2019	DMB

PROJ. NO: 1905884

TITLE AND LOCATION: SPARE SHEET

MCP

CUSTOMER: Agnico Eagle Mines
Agnico Eagle Volute

SCALE	SHEET	SHEETS
NTS	19	25

THIS INFORMATION IS THE PROPERTY OF newterra ltd. AND CANNOT BE REUSED OR REPRODUCED WITHOUT THE WRITTEN CONSENT OF newterra ltd.

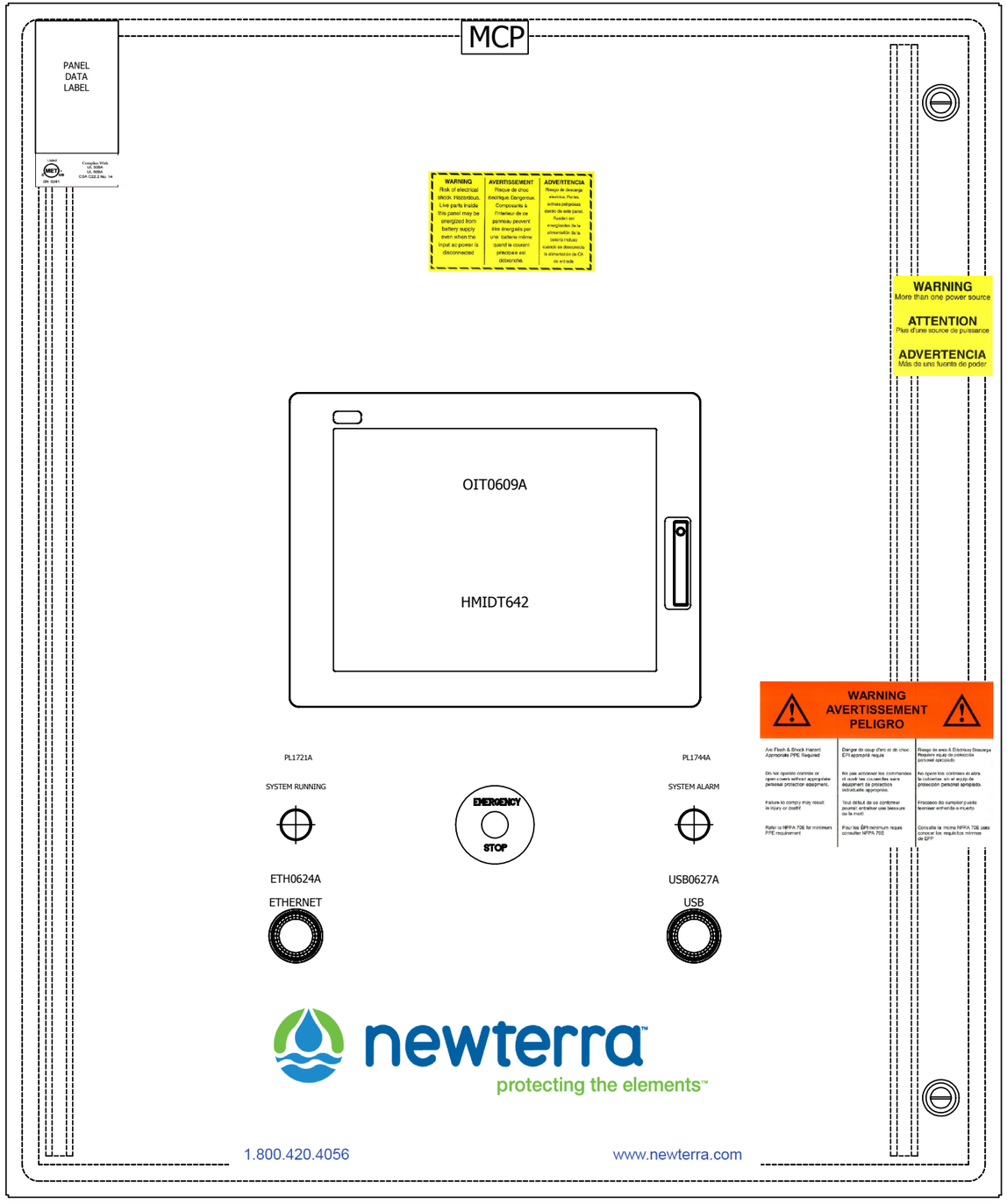

EN4SD36308GY

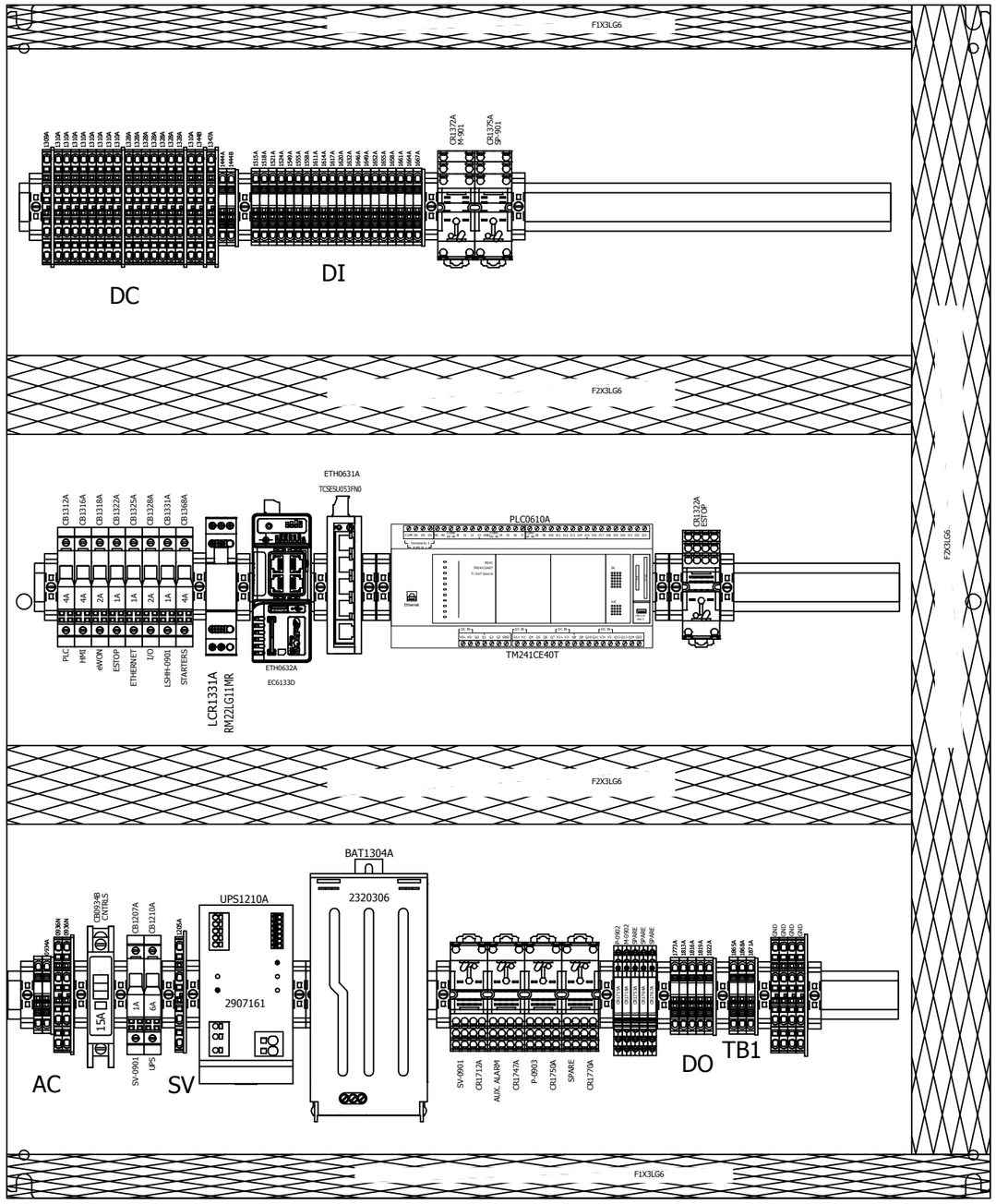

EP3630

NOTES:

1291 CALIFORNIA AVE.
BROCKVILLE ONTARIO
CANADA K6V 5Y6

PHONE: 1-800-420-4056
www.newterra.com

LEVEL	REVISION	DATE (dd/mm/yy)	BY
C	AS BUILT	06/09/2019	DMB
B	FOR PRODUCTION	01/08/2019	DMB
A1	FOR REVIEW	30/07/2019	DMB

PROJ. NO: 1905884

TITLE AND LOCATION: MCP PANEL LAYOUT

MCP

CUSTOMER: Agnico Eagle Mines
Agnico Eagle Volute

SCALE 1 : 4 | SHEET 20 | SHEETS 25

THIS INFORMATION IS THE PROPERTY OF newterra ltd. AND CANNOT BE REUSED OR REPRODUCED WITHOUT THE WRITTEN CONSENT OF newterra ltd.

MPP

Quantity	APES Number	Manufacturer	Part Number	Description	TAG
1	10246	Schneider Electric	QOU230	Breaker, 240V 30A 2P DIN Mount, 10k SCCR	CB0760A
6	10270	Schneider Electric	QOU115	Breaker, 240V 15A 1P DIN Mount, 10k SCCR	CB0906A , CB0910A , CB0921A , CB0924A , CB0928A , CB0934A
2	11216	Schneider Electric	LC1D09BD	Contactor Non-Reversing, 9A(AC3) 125A(AC1), 3-Pole (3 NO), 24VDC	CON1354A , CON1362A
6	11482	Schneider Electric	QOU1PA	Breaker, Lockout Clip	CB0906A , CB0910A , CB0921A , CB0924A , CB0928A , CB0934A
1	17158	Schneider Electric	GV1G09	Combination Starter, Busbar Top Mount	STR1368A
2	18976	Schneider Electric	LRD04	Thermal Overload Relay, Class 10 with Single Phase Sens., Trip: 0.4 to 0.63A	OL0805A , OL0814A
2	18977	Schneider Electric	LRD03	Thermal Overload Relay, Class 10 with Single Phase Sens., Trip: 0.25 to 0.4A	OL0805A , OL0814A
3	19168	Phoenix Contact	801733	Galvinized Steel mounting rail; 35x7,5 mm, 1 mm thick; perforated	MPP
1	19264	Schneider Electric	LUB12	Combination Starter, 12A Power Base, 3/7.5/10HP	STR1368A
1	19269	Schneider Electric	LUA1C20	Combination Starter, 1NO Ready, 1NO Fault Aux. Contact Module	STR1368A
1	19503	Schneider Electric	LUCA1XBL	Combination Starter, TeSysU Standard Control Unit 0.35-1.4A, 24VDC coil	STR1368A
1	20606	Schneider Electric	LUALB1	Combination Starter, Current Limiter, Required on 600V Systems	CL1122A
1	20698	Schneider Electric	SURGE BRACKET	Surge Protector, Mounting Bracket	SPD0717A
1	22890	Schneider Electric	SDSA3650	Surge Protector, 3PH, 600Y/347V, MAX 40kA Surge Suppression	SPD0717A
2	23039	Schneider Electric	LAD7B106	LRD Overload Mounting Bracket, DIN Rail	OL0805A , OL0814A
13	23737	Phoenix Contact	3031364	Terminal, Grey, 28-12AWG, 30A, 600V	DC(11) , HV(2)
2	23742	Phoenix Contact	3030420	End Plate - 30A Feed Thru	
19	23745	Phoenix Contact	800886	End Bracket - DIN Rail	
3	26741	MERSEN	MPDBC6667	Power Block, safety cover	PDB0713A
5	27398	Panduit	F2X3LG6	Wire Duct, 2"x3", Grey, Narrow Finger	MPP
4	27399	Panduit	C2LG6	Wire Duct Cover, 2", Grey	MPP
1	27712	Schneider Electric	GS2AE2	Shaft for Rotary Thru Door Handle	DISC0705A
1	27716	Schneider Electric	GS2AH120	Disconnect Handle, Red/Yellow, NEMA 1, 3R, 12	DISC0705A

NOTES:

newterra
1291 CALIFORNIA AVE.
BROCKVILLE ONTARIO
CANADA K6V 5Y6
PHONE: 1-800-420-4056
www.newterra.com

LEVEL	REVISION	DATE (dd/mm/yy)	BY
C	AS BUILT	06/09/2019	DMB
B	FOR PRODUCTION	01/08/2019	DMB
A1	FOR REVIEW	30/07/2019	DMB

PROJ. NO: 1905884

TITLE AND LOCATION: MPP BILL OF MATERIAL MODULE 8201

CUSTOMER: Agnico Eagle Mines Agnico Eagle Volute

SCALE: NTS | SHEET: 21 | SHEETS: 25

THIS INFORMATION IS THE PROPERTY OF newterra ltd. AND CANNOT BE REUSED OR REPRODUCED WITHOUT THE WRITTEN CONSENT OF newterra ltd.

MPP

Quantity	APES Number	Manufacturer	Part Number	Description	TAG
1	27717	Schneider Electric	GS2GU3N	Internal Fusible switch, 60A, Class J	DISC0705A
1	31254	MERSEN	MPDB67533	Power Block, 350A 2Pri 10Sec Aluminum, 2/0-#14Pri #6-14Sec	PDB0713A
1	33799	Phoenix Contact	3030462	End Plate - Double Feed Thru	
1	37557	Hammond Mfg	2QPL	Panel, Enclosure, Door Hardware, Padlockable Quarter Turn Latch	MPP
1	37558	Hammond Mfg	EZPMFHD	Panel, Enclosure Mounting Feet, Set of 4, Zinc	MPP
1	37638	Schneider Electric	QOU1PL	Breaker, Lockout Clip, 2P & 3P	CB0760A
1	37851	Hammond Mfg	EP3636	Panel, Enclosure, Back Plate, 36" x 36"	MPP
1	38135	Hammond Mfg	EN4SD363612GY	36" x 36" x 12" NEMA4 Steel Enclosure	MPP
9	40229	Phoenix Contact	3031445	Terminal, 4 Prong, 28-10AWG, 32A, 600V, GREY	AC(2) , DC(4) , HV(3)
4	40231	Phoenix Contact	3030527	Terminal, QUATTRO, End cover	
6	40765	Cooper Bussman	CCP2-3-30CC	Compact Circuit Protector, 7.5HP@ 600V, ClassCC Fuse	DISC0724A , DISC0764A , DISC0770A , DISC0805A , DISC0814A , DISC0823A
1	40768	Cooper Bussman	CCP2-2-30CC	Compact Circuit Protector,2 POLE 30A, 600V, ClassCC Fuse	DISC0751A
4	42231	Phoenix Contact	3036039	Terminal, 4 Prong, Ground, 28-10AWG, 30A, 600V, Green	
2	42279	Schneider Electric	LRD01	Thermal Overload Relay, Class 10 with Single Phase Sens., Trip: 0.1 to 0.16A	OL0724A , OL0730A
3	42863	MTE Corp	RLW-04P805	Line Reactor, 600V, 3 Phase, 60Hz, 4.8A, 3% Impedance	ACR0805A , ACR0814A , ACR0823A
11	E1107	Ferraz Shawmut	ATDR15	Fuse, 15A 600V Time Delay	DISC0724A , DISC0751A , DISC0764A , DISC0770A
9	E1123	Ferraz Shawmut	ATDR6	Fuse, 6A 600V Time Delay	DISC0805A , DISC0814A , DISC0823A
3	E1159	Ferraz Shawmut	AJT40	Fuse, 40A 600V Time Delay, Class J	DISC0705A

NOTES:

1291 CALIFORNIA AVE.
BROCKVILLE ONTARIO
CANADA K6V 5Y6

PHONE: 1-800-420-4056
www.newterra.com

LEVEL	REVISION	DATE (dd/mm/yy)	BY
C	AS BUILT	06/09/2019	DMB
B	FOR PRODUCTION	01/08/2019	DMB
A1	FOR REVIEW	30/07/2019	DMB

PROJ. NO: 1905884

TITLE AND LOCATION:
MPP BILL OF MATERIAL
MODULE 8201

CUSTOMER:
Agnico Eagle Mines
Agnico Eagle Volute

SCALE	SHEET	SHEETS
NTS	22	25

THIS INFORMATION IS THE PROPERTY OF newterra ltd. AND CANNOT BE REUSED OR REPRODUCED WITHOUT THE WRITTEN CONSENT OF newterra ltd.

MCP

Quantity	APES Number	Manufacturer	Part Number	Description	TAG
1	10270	Schneider Electric	QOU115	Breaker, 240V 15A 1P DIN Mount, 10k SCCR	CB0934B
1	11482	Schneider Electric	QOU1PA	Breaker, Lockout Clip	CB0934B
1	14607	Schneider Electric	ZB5 AT84	Button, E-Stop	PB1322A
1	14611	Schneider Electric	ZB5 AZ102	Button, Collar with 1 NC Contact Block	PB1322A
3	19168	Phoenix Contact	801733	Galvinized Steel mounting rail; 35x7,5 mm, 1 mm thick; perforated	MCP
1	20569	Airlink_Communications	GW195-180-SM-NM	Cellular Modem Antenna Cable - 15Ft. N-Male to SMA-Male	ETH0632A
1	21649	Schneider Electric	XB7EV04BP	Button, RED LED PILOT LIGHT 24VDC	PL1744A
1	21650	Schneider Electric	XB7EV03BP	Button, GREEN LED PILOT LIGHT 24VDC	PL1721A
5	21888	Schneider Electric	RXM4AB1BD	Miniature Relay, 4PDT, 24 VDC, 6A contacts	CR1322A , CR1712A , CR1747A , CR1750A , CR1770A
5	21889	Schneider Electric	RXZE2S114M	Base/Socket for RXM4 4P Relays	CR1322A , CR1712A , CR1747A , CR1750A , CR1770A
2	22324	Schneider Electric	RXM2AB1BD	Miniature Relay 2PDT 24 VDC	CR1372A , CR1375A
2	22326	Schneider Electric	RXZE2S108M	Base/Socket for RXM2 2P Relays	CR1372A , CR1375A
1	23054	Schneider Electric	ZBY9330	ESTOP Label	PB1322A
29	23737	Phoenix Contact	3031364	Terminal, Grey, 28-12AWG, 30A, 600V	AC(2) , DC(2) , DI(20) , DO(5)
3	23741	Phoenix Contact	3037148	Terminal, Yellow, 28-12AWG, 30A, 600V	TB1(3)
5	23742	Phoenix Contact	3030420	End Plate - 30A Feed Thru	
18	23745	Phoenix Contact	800886	End Bracket - DIN Rail	
1	23747	Phoenix Contact	3031429	Terminal, Double, 28-10AWG, 30A, 600V, Grey	SV(1)
1	24550	Top Office Products	USB_A-A	USB-A MALE TO MALE CABLE	USB0627A
1	25363	Schneider Electric	TCSESU053FN0	Ethernet, 5 port unmanaged ethernet switch	ETH0631A
1	26511	Conec	17-200161	USB TypeA F-F Bulkhead Connector	USB0627A
3	27398	Panduit	F2X3LG6	Wire Duct, 2"x3", Grey, Narrow Finger	MCP
3	27399	Panduit	C2LG6	Wire Duct Cover, 2", Grey	MCP
2	27400	Panduit	F1X3LG6	Wire Duct, 1"x3", Grey, Narrow Finger	MCP
2	27402	Panduit	C1LG6	Wire Duct Cover, 1", Grey	MCP

NOTES:

newterra
1291 CALIFORNIA AVE.
BROCKVILLE ONTARIO
CANADA K6V 5Y6
PHONE: 1-800-420-4056
www.newterra.com

LEVEL	REVISION	DATE (dd/mm/yy)	BY
C	AS BUILT	06/09/2019	DMB
B	FOR PRODUCTION	01/08/2019	DMB
A1	FOR REVIEW	30/07/2019	DMB

PROJ. NO: 1905884

TITLE AND LOCATION: MCP BILL OF MATERIAL MODULE 8202

CUSTOMER: Agnico Eagle Mines Agnico Eagle Volute

SCALE	SHEET	SHEETS
NTS	23	25

THIS INFORMATION IS THE PROPERTY OF newterra ltd. AND CANNOT BE REUSED OR REPRODUCED WITHOUT THE WRITTEN CONSENT OF newterra ltd.

MCP

Quantity	APES Number	Manufacturer	Part Number	Description	TAG
4	27597	Phoenix Contact	0916604	Breaker, 240V 1 AMP 1P C	CB1207A , CB1322A , CB1325A , CB1331A
2	27598	Phoenix Contact	0916605	Breaker, 240V 2 AMP 1P C	CB1318A , CB1328A
3	27599	Phoenix Contact	0916606	Breaker, 240V 4 AMP 1P C	CB1312A , CB1316A , CB1368A
1	27601	Phoenix Contact	0916608	Breaker, 240V 6 AMP 1P C	CB1210A
1	27949	Automation Direct	C5E-STPRD-S3	Red Industrial Ethernet Cable, RJ45, 3ft, STP	CBL3
1	27950	Automation Direct	C5E-STPRD-S7	Red Industrial Ethernet Cable, RJ45, 7ft, STP	CBL8
2	27951	Automation Direct	C5E-STPRD-S10	Red Industrial Ethernet Cable, RJ45, 10ft, STP	CBL2 , CBL5
1	29140	eWON	EC6133D	eWON Cosy 131 LAN/Cell Router, 24VDC Power	ETH0632A
2	33799	Phoenix Contact	3030462	End Plate - Double Feed Thru	
1	35113	Airlink_Communications	BMLPVMB/LTE	Modem, Antenna, Airlink WideBand LTE, N-Female, BMLPVMB/LTE	ETH0632A
1	36124	Schneider Electric	HMIG3U	HMI, Linux Processor	OIT0609A
1	36127	Schneider Electric	HMIDT642	HMI, 12.1" SCREEN, TOUCH SMART DISPLAY	OIT0609A
1	37111	Conec	17-110024	RJ45 Bulkhead Connector	ETH0624A
1	37553	Hammond Mfg	EP3630	Panel, Enclosure, Back Plate, 36" x 30"	MCP
1	37557	Hammond Mfg	2QPL	Panel, Enclosure, Door Hardware, Padlockable Quarter Turn Latch	MCP
1	37558	Hammond Mfg	EZPMFHD	Panel, Enclosure Mounting Feet, Set of 4, Zinc	MCP
1	37848	Schneider Electric	TM241CE40T	M241 PLC, 24 DI, 16 DO, Ethernet Port, 24Vdc	PLC0610A
21	40229	Phoenix Contact	3031445	Terminal, 4 Prong, 28-10AWG, 32A, 600V, GREY	AC(2) , DC(19)
6	40231	Phoenix Contact	3030527	Terminal, QUATTRO, End cover	
5	40363	Schneider Electric	RSL1PRBU	Slim Relay, SPDT, 24VAC/DC Coil	CR1715A , CR1718A , CR1753A , CR1764A , CR1767A
7	40620	Schneider Electric	RXM040W	Diode Module, 6-250V	CR1322A , CR1372A , CR1375A , CR1712A , CR1747A , CR1750A , CR1770A
1	40878	Phoenix Contact	2907161	UPS, 120V In, 24Vdc/10A Out, DIN Rail Mounted	UPS1210A
1	40880	Phoenix Contact	2320306	UPS-BAT, 24Vdc, 3.4Ah VRLA Battery Storage Device, DIN Rail Mounted	BAT1304A
3	42231	Phoenix Contact	3036039	Terminal, 4 Prong, Ground, 28-10AWG, 30A, 600V, Green	
1	42317	Schneider Electric	RM22LG11MR	Level, Conductivity Relay, 24-240Vac/dc coil	LCR1974A
1	42371	Hammond Mfg	EN4SD36308GY	Panel, Enclosure, 36" x 30" x 8", NEMA 4	MCP

NOTES:

newterra
1291 CALIFORNIA AVE.
BROCKVILLE ONTARIO
CANADA K6V 5Y6
PHONE: 1-800-420-4056
www.newterra.com

LEVEL	REVISION	DATE (dd/mm/yy)	BY
C	AS BUILT	06/09/2019	DMB
B	FOR PRODUCTION	01/08/2019	DMB
A1	FOR REVIEW	30/07/2019	DMB

PROJ. NO: 1905884

TITLE AND LOCATION: MCP BILL OF MATERIAL MODULE 8202

CUSTOMER: Agnico Eagle Mines Agnico Eagle Volute

SCALE	SHEET	SHEETS
NTS	24	25

THIS INFORMATION IS THE PROPERTY OF newterra ltd. AND CANNOT BE REUSED OR REPRODUCED WITHOUT THE WRITTEN CONSENT OF newterra ltd.

BLD-7910 - General Purpose Area

Quantity	APES Number	Manufacturer	Part Number	Description	TAG
1	10185	Leviton	GFNT1-W	GFCI 15A, 125V Duplex Receptacle	REC0921A
1	12531	Hammond	Q005PEKF	Encapsulated Transformer, 5KVA, 600:120/240, 60Hz	T0753A
1	12567	Leviton	CS115CN	1P Switch, 15A, 120V, Commercial	TGS0910A
1	14607	Schneider Electric	ZB5 AT4	E-Stop Button	ES-8201
1	14611	Schneider Electric	ZB5 AZ102	Button, Collar with 1 NC Contact Block	ES-8201
1	23054	Schneider Electric	ZBY9330	ESTOP Label	ES-8201
2	23791	Hubbell	HBL5251	15A, 125V, Single Receptacle, Heavy Duty	RECP0906A , RECP0928A
4	38205	RAB	FW4-LED40-B-4K-DIM	Light, 4ft Vapourtight, LED, 4000K, 40W, 120-277V	L0910A , L0912A , L0914A , L0916A
3	42388	Schneider Electric	ATV630U22S6X	Variable Frequency Drive, 600V 3HP	VFD0612A , VFD0620A , VFD0629A

NOTES:

1291 CALIFORNIA AVE.
BROCKVILLE ONTARIO
CANADA K6V 5Y6

PHONE: 1-800-420-4056
www.newterra.com

LEVEL	REVISION	DATE (dd/mm/yy)	BY
C	AS BUILT	06/09/2019	DMB
B	FOR PRODUCTION	01/08/2019	DMB
A1	FOR REVIEW	30/07/2019	DMB

PROJ. NO: 1905884

TITLE AND LOCATION:
BLD-7910 BILL OF MATERIAL
MODULE 8910

CUSTOMER:
Agnico Eagle Mines
Agnico Eagle Volute

SCALE	SHEET	SHEETS
NTS	25	25

THIS INFORMATION IS THE PROPERTY OF newterra ltd. AND CANNOT BE REUSED OR REPRODUCED WITHOUT THE WRITTEN CONSENT OF newterra ltd.

1905884 **Agnico Eagle Volute**

Customer: David Charlesbois Agnico Eagle Mines Limited

System SIte Specifications

Elevation: 0 ft
Max Temp 0 deg F
Min Temp: 0 deg F
Noise Target:
Gas Required:
Water Required:
Telephone Reqd:
Building:

System Electrical Specifications

Voltage:
Main Disconnect
Panel Approval: Class
System Approval: Class
Panel Type:
Telemetry:
Autodialer:
EMonitor: Server:

System SVE (First Blower)

0 @ 0
Blower Disch Temp: 0 deg F
Inlet Legs: 0
Disch Press: 0 in wc
Water Flowrate: 0 gpm
Heat xchg Disch: 0 deg F

System SVE (Second Blower)

0 @ 0
Blower Disch Temp: 0 deg F
Inlet Legs: 0
Disch Press: 0 in wc
Water Flowrate: 0 gpm
Heat xchg Disch: 0 deg F

Air Sparge

0 @ 0 psi
Sparge Disch Temp: 0 deg F
Disch Legs: 0
Heat xchg Disch: 0 deg F

Other Specifications

Other Inlet Liquid Flow: 0 gpm
Disch Flow: 0 gpm @ 0 psi
AirTreatment:
Water_Treatment:
Stripper Airflow: 0 cfm
Stripper Dsn Flow: 0 gpm
OWS_Dsn_Flow: 0 gpm

Contaminants

Other Information May be Presented Below

Connection Info:

Shipping Information

Terminaux Portuaire QC-Port
Becancour - Meliadine Project
355 Alphonse-Dehaies
Beacncour Quebec
Canada G9H 2Y7

Parts

Module Code: 0

Welding Supplies	Part:	14657
	Qty:	2
	Mfg:	
LINC NOZZLE	Mfg Part:	
11205448 / KP2742150R		
Estimated Freight to newterra from jobsite or vendor	Part:	16814
	Qty:	1
	Mfg:	
Machine body Transport and air freight DDU to： Newterra Ltd. 1291 California Ave Brockville, Ontario Canada K6V 5Y6 Packing size: 2.2m*1m*1.15m/one case gross weight:320kgs	Mfg Part:	0
Estimated Freight to newterra from jobsite or vendor	Part:	16814
	Qty:	1
	Mfg:	
Gearmotor Transport and express freight Express to(without import tariff)： Newterra Ltd. 1291 California Ave Brockville, Ontario Canada K6V 5Y6 packing size: 0.8m*0.65m*0.55m/one case gross weight：100kgs	Mfg Part:	0
Estimated Freight to newterra from jobsite or vendor	Part:	16814
	Qty:	1
	Mfg:	
Reduced freight rate due to vendor unable to action revised purchase order.	Mfg Part:	0
Estimated Freight to newterra from jobsite or vendor	Part:	16814
	Qty:	1
	Mfg:	
Delivery charge	Mfg Part:	0
Fuel Charge	Part:	25847
	Qty:	1
	Mfg:	
	Mfg Part:	X0009841
Welding, 11T052, Walter, Wheel, Cut-Off, Zipcutt 127MM(5") x 1.2MM(3/64") x 22.3MM(7/8")	Part:	37981
	Qty:	25
	Mfg:	
	Mfg Part:	A0415570

Welding, Surcharge, Regulatory Compliance	Part:	37984
	Qty:	1
	Mfg:	
	Mfg Part:	X0003655
Welding, BLU-38978435, Blueshield, Wire, Solid, Mild Steel LA S-6, 0.9MM(0.035") x 20KG(44LB) Spool AWS ER70S-6, CSA ER480S-6/ER49S-6	Part:	37994
	Qty:	40
	Mfg:	
	Mfg Part:	A0418521
Welding, Delivery Charge, Shipping Fee	Part:	38167
	Qty:	1
	Mfg:	
	Mfg Part:	X0004885
Welding, Delivery Charge, Hardgoods	Part:	38413
	Qty:	42
	Mfg:	
	Mfg Part:	X0001584
Welding, Surcharge, Filler Metal ALC, Carbon Steel MIG And SAW Solid Wire Surcharge	Part:	40822
	Qty:	40
	Mfg:	
	Mfg Part:	X0000781

Freight

Estimated Freight to jobsite - address as provided Outbound	Part:	25793
	Qty:	1
	Mfg:	
Pick Up Date: Tuesday Sept 3, 2019 Pick Up Addr: Newterra Ltd. 1291 California Ave Brockville, ON K6V 5Y6 Delivery Date: Tuesday Sept 3, 2019 MUST CALL PORT TO BOOK GATE DELIVERY APPOINTMENT Delivery Addr: Terminaux Portuaire QC-Port Becancour c/o Agnico Eagle Mines Ltd Meliadine Project 355 Alphonse-Dehaies Beacncour,Quebec G9H 2Y7 Tag:OP-826270 MUST CALL PORT MIN 24 HRS AHEAD TO BOOK PORT APPOINTMENT Port Becancour (819) 294-9911 becancour@qsl.com Desc: Water Treatment Equipment (1) HC Container 40ft x 8ft x 9ft-6in est 20,000lb	Mfg Part:	---

INSURANCE

Insurance, Freight, Misc.	Part:	37128
	Qty:	1
	Mfg:	
Insured value - $265,000 CAD	Mfg Part:	
No extra charge for this insured value.		

Pipe

Union, Black, 4"	Part:	P1196
	Qty:	4
	Mfg:	
---	Mfg Part:	4BLU

Building

Module Code: 7900

-

Checker plate, 3/16", Steel*	Part:	16049
4ft x 8ft	Qty:	10
	Mfg:	
---	Mfg Part:	14526
Tubing, 1" x 1" x 1/8", 24 ft/L	Part:	38121
Steel	Qty:	240
	Mfg:	
---	Mfg Part:	67600
Eye Wash Station, w/ Shower, safety H-5458, 15 gallons	Part:	39629
Constant 15 min flow, Includes: Eyewash & Shower	Qty:	1
Portable, Pressurized SS Tank, Twin Spray Heads	Mfg:	
*Use with water preservative	Mfg Part:	H-5458

7900

Lumber, Plywood, Spr, STD, 4 x 8 x 3/8"	Part:	14463
620295	Qty:	36
	Mfg:	
---	Mfg Part:	2817481
Paint, Interior/Exterior, Moonlight (white)	Part:	42787
Rona ECO recycled paint	Qty:	5
Moonlight (white) 354804 , 1 Gallon	Mfg:	
---	Mfg Part:	354804

7901

Container, Painting, 40ft exterior/interior	Part:	12063
	Qty:	1
	Mfg:	
Please Paint Grey	Mfg Part:	
Container, Shipping, Tilt load	Part:	13593
	Qty:	1
	Mfg:	
None	Mfg Part:	
Container, 8' x 40' x 9'6" High Cube	Part:	15512
Premium Quality Used	Qty:	1
newterra Tier #2 Container	Mfg:	
---	Mfg Part:	---
Chemical, Gator Guard, BGG21, 1.8 gal	Part:	16139
Black	Qty:	2
Supply MSDS	Mfg:	
-	Mfg Part:	100097
Manual, System, Hard Copy	Part:	17149
	Qty:	2
	Mfg:	
-	Mfg Part:	
Door, Assembly, 72", Double	Part:	19012
	Qty:	1
	Mfg:	Maple Leaf Environmental Equipment
-	Mfg Part:	-

Door, Assembly, 36", Single	Part:	19014
	Qty:	1
	Mfg:	Maple Leaf Environmental Equipment
-	Mfg Part:	-
Door, Assembly, 36", Single	Part:	19014
	Qty:	1
	Mfg:	Maple Leaf Environmental Equipment
-	Mfg Part:	-
Insulation, Container, Floor, Blown Spray Foam	Part:	19243
Factory Installed	Qty:	1
	Mfg:	
Container 40x8x9.6 Thickness = 3" Approximately R12	Mfg Part:	40ft Container
Door, Crash Bar, 36" Door, External Handle	Part:	19450
For entry with lock-to be keyed alike 32645 2 keys	Qty:	1
For emerency exit - Taymor 900 Series	Mfg:	
None	Mfg Part:	48672+48681+23
Door, Crash Bar, 36" Door, External Handle	Part:	19450
For entry with lock-to be keyed alike 32645 2 keys	Qty:	1
For emerency exit - Taymor 900 Series	Mfg:	
	Mfg Part:	48672+48681+23
Door, Crash Bar, 36" Door, External Handle	Part:	19450
For entry with lock-to be keyed alike 32645 2 keys	Qty:	2
For emerency exit - Taymor 900 Series	Mfg:	
-	Mfg Part:	48672+48681+23
Louver, Backdraft damper, 12"x12"	Part:	23080
Non-Motorized	Qty:	1
	Mfg:	Canarm
None	Mfg Part:	SR3212X12
Hood, Louver, LOUVER-12, Fits 12" Louver	Part:	23989
	Qty:	1
	Mfg:	
None	Mfg Part:	
Enclosure Assembly - Container or Trailer	Part:	24170
	Qty:	1
	Mfg:	
-	Mfg Part:	-
Insulation, Container, Complete interior insulation, Blown	Part:	25403
Spray Foam	Qty:	1
	Mfg:	
Container 40x8x9.6 Thickness = 2"	Mfg Part:	40ft 2in
Door, Frame, Containment, w/ drilled and tapped holes	Part:	26554
36" Single Door Frame, Per newterra Drawing	Qty:	1
Ordered on demand	Mfg:	
-	Mfg Part:	
Door, Frame, Containment, w/ drilled and tapped holes	Part:	26554
36" Single Door Frame, Per newterra Drawing	Qty:	1
Ordered on demand	Mfg:	
-	Mfg Part:	

Door, Insul, Single 36X80 w/ lite 18GA, No Frame W/ Hinges, Vinyl top cap, weather stripping, LHH doorsweep, Wind chain, Prep for taymor panic bar None	Part: Qty: Mfg: Mfg Part:	26603 1
Door, Insul, Single 36X80 w/ lite 18GA, No Frame W/ Hinges, Vinyl top cap, weather stripping, LHH doorsweep, Wind chain, Prep for taymor panic bar None	Part: Qty: Mfg: Mfg Part:	26603 1
Door, Sweep, Vinyl, 3', U-Shaped None	Part: Qty: Mfg: Mfg Part:	27128 1 2394-313
Door, Sweep, Vinyl, 3', U-Shaped None	Part: Qty: Mfg: Mfg Part:	27128 1 2394-313
Door, Sweep, Vinyl, 3', U-Shaped None	Part: Qty: Mfg: Mfg Part:	27128 2 2394-313
Weatherstrip, 1/8" x 1/2", 892-360 50' packages None	Part: Qty: Mfg: Mfg Part:	27327 20 892-360
Weatherstrip, 1/8" x 1/2", 892-360 50' packages None	Part: Qty: Mfg: Mfg Part:	27327 20 892-360
Weatherstrip, 1/8" x 1/2", 892-360 50' packages None	Part: Qty: Mfg: Mfg Part:	27327 20 892-360
Door, Insulated, 36x80, Replacement Wind Chain -	Part: Qty: Mfg: Mfg Part:	28243 1
Door, Insulated, 36x80, Replacement Wind Chain -	Part: Qty: Mfg: Mfg Part:	28243 1
Door, Insulated, 36x80, Replacement Wind Chain None	Part: Qty: Mfg: Mfg Part:	28243 1
Door, Frame, Containment, w/ drilled and tapped holes 36" Double Door Frame, Per newterra Drawing -	Part: Qty: Mfg: Mfg Part:	28538 1

Door, Insulated, Double 2x36x80 KDx 3", 12x12 lite 18ga, No Frame, BBNRP Hinge, Vinyl top cap, weather stripping, wind chain. Prep for taymor panic bar Includes Astregal & Surface Bolts	Part: Qty: Mfg: Mfg Part:	28638 1
Decal, High Cube Warning, Container Kit 2 MIL Laminated, (1) Caution (8) Scrolls -	Part: Qty: Mfg: Mfg Part:	39280 1 HC KIT

B-7911

Blower, Cincinnati LM-4, 4.7" X 2.9" Width Alum wheel Arrangement #4, Direct Drive, AMCA B 1/2hp 1/60/115 3450 TEXP motor ARR. NO4, DIRECT DRIVE CW BOTTOM DISCHARGE CAST ALUMINIUM HOUSING 4.7 X2.9 ALUMINIUM WHEEL AMCA B SPARK RESISTANT SLIP FIT INLET SLIP FIT DISCHARGE 1/2 HP 1/60/115 3450 RPM TEXP MOTOR I/D&II/F&G	Part: Qty: Mfg: Mfg Part:	25747 1 Cincinatti Fan LM-4

Enclosure

Misc, Painting As per detailed description below Sandblasting & Spraying Gator Guard on Steel Container floor	Part: Qty: Mfg: Mfg Part:	35829 1
Paint, Hempatex Hi Build 46410, Grey Hempel Colour Code: 10100 Price per Gallon - sold in 5 gallon pails ---	Part: Qty: Mfg: Mfg Part:	39003 20 Hi Build 46410 - 1

H-7911/2

Heater, Forced, Air, Ouellet, OAS 10 KW 600V 3ph C/W Stat, OAS10036T ---	Part: Qty: Mfg: Mfg Part:	38168 2 OAS10036T

PSL-7911

Sensor, Flow, 4", DS-300-4 Must be installed in SCH 40 pipe	Part: Qty: Mfg: Mfg Part:	11695 1 Dwyer DS-300-4
Switch, Pressure, 1823-00 0.07 to 0.22 "WC Dwyer Nema 1	Part: Qty: Mfg: Mfg Part:	22539 1 Dwyer 1823-00

TSLL-7911

Switch, Temperature Thermostat, CN TF115-001 40F to 110F / 5C to 40C dial SS coil nema 4 housing motor rated PECO -	Part: Qty: Mfg: Mfg Part:	10515 1 Canarm CAN CNTF115

MPP

Module Code: 8201

Decal

Label, Decal, newterra, Vertical, Colour	Part:	36638
12" w x 8.9" H	Qty:	1
NT-CV-12. For Metal or Wood surfaces only	Mfg:	
---	Mfg Part:	NT-CV-12

MPP

Breaker, SQD QOU230	Part:	10246
240V 30A 2P Din Mount	Qty:	1
	Mfg:	
Schneider Electric	Mfg Part:	SQD QOU230
Breaker, SQD QOU115	Part:	10270
240V 15A 1P DIN Mount	Qty:	6
10k SCCR	Mfg:	Square D
Schneider Electric	Mfg Part:	SQD QOU115
Contactor,SQD LC1D09BD	Part:	11216
9A, 2/2/5/7.5HP	Qty:	2
24VDC coil	Mfg:	Square D
Schneider Electric	Mfg Part:	SQD LC1D09BD
Lockout clip, QOU1PA	Part:	11482
	Qty:	6
	Mfg:	
Schneider Electric	Mfg Part:	SQD QOU1PA
Combination Starter, SQT GV1G09	Part:	17158
TeSysU Busbar Top mount	Qty:	1
	Mfg:	Telemecanique
Schneider Electric	Mfg Part:	GV1G09
Overload, SQT LRD04	Part:	18976
0.4A to 0.63A	Qty:	2
	Mfg:	Schneider Electric
---	Mfg Part:	SQT LRD04
Overload, SQT LRD03	Part:	18977
0.25A to 0.4A	Qty:	2
	Mfg:	Schneider Electric
---	Mfg Part:	SQT LRD03
Combination Starter, SQT LUB12	Part:	19264
TeSysU Power Base 12A	Qty:	1
3HP@208/240, 7.5HP@480, 10HP@600	Mfg:	Telemecanique
Schneider Electric	Mfg Part:	SQT LUB12
Combination Starter, SQT LUA1C20	Part:	19269
TeSysU Aux Contact Module	Qty:	1
1NO Ready 1NO Fault	Mfg:	Telemecanique
Schneider Electric	Mfg Part:	LUA1C20
Combination Starter, SQT LUCA1XBL	Part:	19503
TeSysU Standard Control Unit 0.35-1.4A	Qty:	1
24VDC coil	Mfg:	Telemecanique
Schneider Electric	Mfg Part:	LUCA1XBL

Combination Starter, SQT LUALB1	Part:	20606
TeSysU Limiter-Isolator Required on 600V	Qty:	1
	Mfg:	Telemecanique
Schneider Electric	Mfg Part:	SQT LUALB1
Surge Protector, Mounting Bracket	Part:	20698
	Qty:	1
	Mfg:	
Schneider Electric	Mfg Part:	INT AG1BRKT
Surge Protector, SQT SDSA3650	Part:	22890
3Ph, 600Y/347V Lightning Arrestor	Qty:	1
MAX 40kA surge	Mfg:	Square D
Schneider Electric	Mfg Part:	SQT SDSA3650
Overload, SQT LAD7B106	Part:	23039
LRD Overload Mount	Qty:	2
	Mfg:	Schneider Electric
---	Mfg Part:	SQT LAD7B106
Terminal, PHX 3031364	Part:	23737
Grey, Spring Cage, Feed Thru, 30A	Qty:	13
	Mfg:	Phoenix Contact
Phoenix Contact	Mfg Part:	PHX 3031364
Terminal, PHX 3030420	Part:	23742
Partition Plate, Spring Cage, Feed Thru, 30A	Qty:	2
	Mfg:	Phoenix Contact
Phoenix Contact	Mfg Part:	PHX 3030420
Terminal, PHX 800886	Part:	23745
End Bracket, DIN Rail	Qty:	19
	Mfg:	Phoenix Contact
Phoenix Contact	Mfg Part:	PHX 800886
Label, Warning, Arc Flash, Tri-lingual	Part:	24694
	Qty:	1
	Mfg:	
NEWTERRA	Mfg Part:	Quote 4626
Power Block, MPDBC6667	Part:	26741
safety cover	Qty:	3
	Mfg:	
MERSEN	Mfg Part:	MPDBC6667
Disconnect Shaft, SQT GS2AE2	Part:	27712
320mm shaft	Qty:	1
	Mfg:	Schneider Electric
Schneider Electric	Mfg Part:	SQT GS2AE2
Disconnect Handle, SQT GS2AH120	Part:	27716
Handle Red/Yellow, NEMA 1, 3R, 12	Qty:	1
For 30A & 60A Switches	Mfg:	Schneider Electric
Schneider Electric	Mfg Part:	SQT GS2AH120
Disconnect, 3ph, SQT GS2GU3N	Part:	27717
60A, 600V Time Delay	Qty:	1
Class J	Mfg:	Schneider Electric
Schneider Electric	Mfg Part:	SQT GS2GU3N

Power Block, MPDB67533	Part:	31254
350A 2Pri 10Sec Aluminum	Qty:	1
2/0-#14Pri #6-14Sec	Mfg:	Goulds
MERSEN	Mfg Part:	
Terminal, End Cover, PHX 3030462	Part:	33799
D-STTB 4,For double spring cage PHX 3031429	Qty:	1
	Mfg:	
Phoenix Contact	Mfg Part:	PHX 3030462
Label, Decal, newterra, Panel, Colour	Part:	36639
8.5" w x 4" H	Qty:	1
NT-PS. For Metal or Wood surfaces only	Mfg:	
NEWTERRA	Mfg Part:	NT-PS
Enclosure, Door Hardware	Part:	37557
Padloackable Quarter Turn Latch	Qty:	1
Hammond 2QPL	Mfg:	
Hammond Mfg	Mfg Part:	HAM 2QPL
Enclosure Mounting Feet	Part:	37558
Set of 4, Zinc	Qty:	1
Hammond EZPMFHD	Mfg:	
Hammond Mfg	Mfg Part:	HAM EZPMFHD
Padlock Attachment, QOU1PL	Part:	37638
for QOU 2 & 3 pole breakers	Qty:	1
	Mfg:	Schneider Electric
Schneider Electric	Mfg Part:	SQD QOU1PL
Panel, Backplate, 36" x 36"	Part:	37851
Hammond EP3636	Qty:	1
	Mfg:	
Hammond Mfg	Mfg Part:	HAM EP3636
Enclosure, Panel, 36" x 36" x 12", NEMA 4	Part:	38135
Hammond EN4SD363612GY	Qty:	1
	Mfg:	
Hammond Mfg	Mfg Part:	HAM EN4SD363
Terminal, PHX 3031445	Part:	40229
Grey, Spring Cage, Feed thru, 4 pin, 32A	Qty:	9
	Mfg:	Phoenix Contact
Phoenix Contact	Mfg Part:	3031445
Terminal, PHX 3030527	Part:	40231
Quattro END COVER	Qty:	4
	Mfg:	Phoenix Contact
Phoenix Contact	Mfg Part:	3030527
Fuse Holder, CCP2-3-30CC	Part:	40765
3 Pole, 600V, 30A, 200kA SCCR	Qty:	6
	Mfg:	Cooper
Cooper Bussman	Mfg Part:	CCP2-3-30CC
Fuse holder, BUS CCP2-2-30CC	Part:	40768
2 Pole, 600V, 30A, Class CC, 200kA SCCR	Qty:	1
	Mfg:	Cooper
Cooper Bussman	Mfg Part:	CCP2-2-30CC

Terminal, PHX 3036039	Part:	42231
Ground, Spring Cage, Feed Thru, 28-12AWG	Qty:	4
Double-level, STTB 4-PE	Mfg:	
Phoenix Contact	Mfg Part:	PHX 3036039
Overload, SQD LRD01	Part:	42279
0.1-0.16A	Qty:	2
	Mfg:	Schneider Electric
Schneider Electric	Mfg Part:	SQT LRD01
Reactor, Open, GLC RLW-04P805	Part:	42863
4.8A, 600V, 3PH, 3%	Qty:	3
	Mfg:	
MTE Corp	Mfg Part:	GLC RLW-04P80
Fuse, GLD ATDR15	Part:	E1107
15A 600V Time Delay	Qty:	11
Class CC	Mfg:	Ferraz Shawmut
Ferraz Shawmut	Mfg Part:	GLD ATDR15
Fuse,GLD ATDR6	Part:	E1123
6A 600V Time Delay	Qty:	9
Class CC	Mfg:	Ferraz Shawmut
Ferraz Shawmut	Mfg Part:	GLD ATDR6
Fuse, GLD AJT40	Part:	E1159
40A 600V Time Delay	Qty:	3
Class J	Mfg:	Ferraz Shawmut
Ferraz Shawmut	Mfg Part:	GLD AJT40

MCP

Module Code: 8202

MCP

Breaker, SQD QOU115	Part:	10270
240V 15A 1P DIN Mount	Qty:	1
10k SCCR	Mfg:	Square D
Schneider Electric	Mfg Part:	SQD QOU115
Lockout clip, QOU1PA	Part:	11482
	Qty:	1
	Mfg:	
Schneider Electric	Mfg Part:	SQD QOU1PA
Button, E-Stop, ZB5 AT84	Part:	14607
E-Stop Button	Qty:	1
	Mfg:	Telemecanique
Schneider Electric	Mfg Part:	SQD ZB5 AT84
Button, ZB5 AZ102	Part:	14611
Collar with 1 N/C Contact Block	Qty:	1
	Mfg:	Telemecanique
Schneider Electric	Mfg Part:	SQD ZB5 AZ102
Button, SQT XB7EV04BP	Part:	21649
Red Pilot Light 24VDC	Qty:	1
	Mfg:	Telemecanique
Schneider Electric	Mfg Part:	SQT XB7EV04B
Button, SQT XB7EV03BP	Part:	21650
Green LED Pilot Light - 24VDC	Qty:	1
	Mfg:	Telemecanique
Schneider Electric	Mfg Part:	SQT XB7EV03B
Relay, SQT RXM4AB1BD	Part:	21888
Miniature Relay 4PDT 24 V DC	Qty:	5
	Mfg:	Telemecanique
Schneider Electric	Mfg Part:	SQT RXM4AB1B
Relay, SQT RXZE2S114M	Part:	21889
Base/Socket for RXM4 4P Relays	Qty:	5
	Mfg:	Telemecanique
Schneider Electric	Mfg Part:	SQT RXZE2S114
Relay, SQT RXM2AB1BD	Part:	22324
Miniature Relay 2PDT 24 VDC	Qty:	2
	Mfg:	Telemecanique
---	Mfg Part:	SQT RXM2AB1B
Relay, SQT RXZE2S108M	Part:	22326
Base/Socket for RXM2 2P Relays	Qty:	2
	Mfg:	Telemecanique
---	Mfg Part:	SQT RXZE2S108
Label, Emergency Stop, SQT ZBY9320	Part:	23054
	Qty:	1
	Mfg:	
Schneider Electric	Mfg Part:	SQT ZBY9320

Terminal, PHX 3031364	Part:	23737
Grey, Spring Cage, Feed Thru, 30A	Qty:	29
	Mfg:	Phoenix Contact
Phoenix Contact	Mfg Part:	PHX 3031364
Terminal, PHX 3037148	Part:	23741
Yellow, Spring Cage, Feed Thru, 30A	Qty:	3
	Mfg:	Phoenix Contact
Phoenix Contact	Mfg Part:	PHX 3037148
Terminal, PHX 3030420	Part:	23742
Partition Plate, Spring Cage, Feed Thru, 30A	Qty:	5
	Mfg:	Phoenix Contact
Phoenix Contact	Mfg Part:	PHX 3030420
Terminal, PHX 800886	Part:	23745
End Bracket, DIN Rail	Qty:	21
	Mfg:	Phoenix Contact
Phoenix Contact	Mfg Part:	PHX 800886
Terminal, PHX 3031429	Part:	23747
Grey, Double, Spring Cage, Feed Thru, 30A	Qty:	1
	Mfg:	Phoenix Contact
Phoenix Contact	Mfg Part:	PHX 3031429
Cable, USB, MALE A to MALE A	Part:	24550
Used to go from HMI to external panel interface	Qty:	1
	Mfg:	
Top Office Products	Mfg Part:	N82E1681211934
Label, Warning, Arc Flash, Tri-lingual	Part:	24694
	Qty:	1
	Mfg:	
NEWTERRA	Mfg Part:	Quote 4626
Ethernet, SQT TCSESU053FN0	Part:	25363
5 port unmanaged ethernet switch	Qty:	1
	Mfg:	Schneider Electric
Schneider Electric	Mfg Part:	SQT TCSESU053
Connector, 17-200161	Part:	26511
USB Bulkhead Adapter with Cover, F-F Type A	Qty:	1
	Mfg:	
Conec	Mfg Part:	626-1355-ND
Breaker, Phoenix, PHX 0916604	Part:	27597
UT 6-TMC M 1A	Qty:	4
	Mfg:	
Phoenix Contact	Mfg Part:	0916604
Breaker, Phoenix, PHX 0916605	Part:	27598
UT 6-TMC M 2A	Qty:	2
	Mfg:	
Phoenix Contact	Mfg Part:	0916605
Breaker, Phoenix, PHX 0916606	Part:	27599
UT 6-TMC M 4A	Qty:	3
	Mfg:	
Phoenix Contact	Mfg Part:	0916606

Breaker, Phoenix, PHX 0916608	Part:	27601
UT 6-TMC M 6A	Qty:	1
	Mfg:	
Phoenix Contact	Mfg Part:	0916608
Label, Warning, Risk of Electrical Shock, Tri-lingual	Part:	27669
Yellow and Black, 4" x 6	Qty:	1
	Mfg:	
NEWTERRA	Mfg Part:	Quote 16870
Label, Warning, More than one Source of Power, Tri-lingual	Part:	27670
Yellow and Black - 3" x 3"	Qty:	1
	Mfg:	
NEWTERRA	Mfg Part:	Quote 16871
PLC, Ethernet Cable STP	Part:	27949
CAT5E STP Straight-Thru	Qty:	1
Red - 3ft.	Mfg:	Automation Direct
Automation Direct	Mfg Part:	C5E-STPRD-S3
C5E-STPRD-S7	Part:	27950
CAT5E STP - Straight-Thru	Qty:	1
Red - 7ft.	Mfg:	Automation Direct
Automation Direct	Mfg Part:	C5E-STPRD-S7
PLC, Ethernet Cable STP	Part:	27951
CAT5E STP Straight-Thru	Qty:	2
Red - 10ft.	Mfg:	Automation Direct
Automation Direct	Mfg Part:	C5E-STPRD-S10
Modem/Router, EC6133D	Part:	29140
eWON Cosy 131 Ethernet plus with GSM 3G+	Qty:	1
	Mfg:	
eWON	Mfg Part:	EC6133D
Terminal, End Cover, PHX 3030462	Part:	33799
D-STTB 4,For double spring cage PHX 3031429	Qty:	2
	Mfg:	
Phoenix Contact	Mfg Part:	PHX 3030462
HMI, Linux Processor, HMIG3U	Part:	36124
This linux processor can be used with any of the	Qty:	1
HMIDT smart displays	Mfg:	
Schneider Electric	Mfg Part:	HMIG3U
HMI, 12.1" DISPLAY, HMIDT642	Part:	36127
12.1 TOUCH SMART DISPLAY	Qty:	1
	Mfg:	
Schneider Electric	Mfg Part:	SQM HMIDT642
Label, Decal, newterra, Panel, Colour	Part:	36639
8.5" w x 4" H	Qty:	1
NT-PS. For Metal or Wood surfaces only	Mfg:	
NEWTERRA	Mfg Part:	NT-PS
Connector, 17-110024	Part:	37111
Inline RJ45 Coupling, both sides, DOOR ETHERNET	Qty:	1
bayonet locking & protective cover	Mfg:	
Conec	Mfg Part:	DIG 17-110024

Enclosure, Back Plate, 36" x 30"	Part:	37553
Hammond EP3630	Qty:	1
	Mfg:	
Hammond Mfg	Mfg Part:	HAM EP3630
Enclosure, Door Hardware	Part:	37557
Padloackable Quarter Turn Latch	Qty:	1
Hammond 2QPL	Mfg:	
Hammond Mfg	Mfg Part:	HAM 2QPL
Enclosure Mounting Feet	Part:	37558
Set of 4, Zinc	Qty:	1
Hammond EZPMFHD	Mfg:	
Hammond Mfg	Mfg Part:	HAM EZPMFHD
PLC, SQM TM241CE40T	Part:	37848
24 DI, 16 DO, Ethernet, 24Vdc	Qty:	1
	Mfg:	Schneider Electric
Schneider Electric	Mfg Part:	SQM TM241CE4
Terminal, PHX 3031445	Part:	40229
Grey, Spring Cage, Feed thru, 4 pin, 32A	Qty:	21
	Mfg:	Phoenix Contact
Phoenix Contact	Mfg Part:	3031445
Terminal, PHX 3030527	Part:	40231
Quattro END COVER	Qty:	6
	Mfg:	Phoenix Contact
Phoenix Contact	Mfg Part:	3030527
Slim Relay, SQT RSL1PRBU	Part:	40363
1 C/O contact, 24VAC/VDC, 6A	Qty:	5
	Mfg:	Schneider Electric
Schneider Electric	Mfg Part:	SQT RSL1PRBU
Diode Module, 6-25V, SQT RXM040W	Part:	40620
	Qty:	7
	Mfg:	Schneider Electric
Schneider Electric	Mfg Part:	SQT RXM040W
UPS, TRIO-UPS-2G/1AC/24VDC/10, PHX 2907161	Part:	40878
120V In, 24Vdc @ 10A Out	Qty:	1
	Mfg:	Phoenix Contact
Phoenix Contact	Mfg Part:	PHX 2907161
UPS, TRIO-UPS-2G/1AC/24VDC/10, PHX 2907161	Part:	40878
120V In, 24Vdc @ 10A Out	Qty:	1
	Mfg:	Phoenix Contact
---	Mfg Part:	PHX 2907161
UPS-BAT, 24Vdc, 3.4Ah, PHX 2320306	Part:	40880
VRLA Battery	Qty:	1
	Mfg:	
Phoenix Contact	Mfg Part:	PHX 2320306
Terminal, PHX 3036039	Part:	42231
Ground, Spring Cage, Feed Thru, 28-12AWG	Qty:	4
Double-level, STTB 4-PE	Mfg:	
Phoenix Contact	Mfg Part:	PHX 3036039

Relay, Level Control, SQD RM22LG11MR	Part:	42317
5k to 100k sensitivity, 24 to 240V dc/50/60Hz ac	Qty:	1
	Mfg:	
Schneider Electric	Mfg Part:	SQD RM22LG11
Enclosure, 36" x 30" x 8"	Part:	42371
NEMA 4, Hammond EN4SD36308GY	Qty:	1
	Mfg:	
Hammond Mfg	Mfg Part:	HAM EN4SD3630

BLD-7910

Plug, Electrical, GFCI Duplex, 15A, Leveton, GFNT1-W white	Part:	10185
	Qty:	1
	Mfg:	Leveton
Leviton	Mfg Part:	GFNT1-W
Transformer, Hammond, HAT Q005PEKF	Part:	12531
600/120,5KVA,UL,CSA	Qty:	1
	Mfg:	
Hammond	Mfg Part:	HAT Q005PEKF
Switch, CS115CN	Part:	12567
15A, 120/277VAC, 1P Commercial Grade	Qty:	1
	Mfg:	Hubbell
Leviton	Mfg Part:	CS115CN
Button, E-Stop, ZB5 AT84	Part:	14607
E-Stop Button	Qty:	1
	Mfg:	Telemecanique
Schneider Electric	Mfg Part:	SQD ZB5 AT84
Button, ZB5 AZ102	Part:	14611
Collar with 1 N/C Contact Block	Qty:	1
	Mfg:	Telemecanique
Schneider Electric	Mfg Part:	SQD ZB5 AZ102
Label, Emergency Stop, SQT ZBY9320	Part:	23054
	Qty:	1
	Mfg:	
Schneider Electric	Mfg Part:	SQT ZBY9320
Receptacle, HUB HBL5251	Part:	23791
15A, 120V, Single Receptacle, Commercial Grade	Qty:	2
	Mfg:	Hubbell
Hubbell	Mfg Part:	HUB HBL5251
Light, 4ft Vapourtight, LED, RAB FW4-LED40-B-4K-DIM	Part:	38205
4000K, 40W, 120-277V, Dimmable	Qty:	4
	Mfg:	
RAB	Mfg Part:	RAB FW4-LED40
Variable Frequency Drive, SQT ATV630U22S6X	Part:	42388
VFD 600V 3HP Type 1	Qty:	3
	Mfg:	Schneider Electric
Schneider Electric	Mfg Part:	SQT ATV630U22

Union, PVC 80, 1", SxS, 8057-010	Part:	10037
Viton	Qty:	1
	Mfg:	
Union, PVC 80, 1", SxS, 8057-010	Mfg Part:	
Valve, Ball, Brass, 1/4", 150#	Part:	10047
NPT, Teflon seats, 600 PSI WOG	Qty:	1
	Mfg:	Kitz
Valve, Ball, Brass, 1/4", 150#	Mfg Part:	
Nipple, Galv, 1" x 3"	Part:	10144
	Qty:	1
	Mfg:	
Nipple, Galv, 1" x 3"	Mfg Part:	
Reducer, Bushing, Galv, 1" x 3/4"	Part:	10146
Hex	Qty:	7
	Mfg:	
Reducer, Bushing, Galv, 1" x 3/4"	Mfg Part:	
Reducer, Bushing, PVC 80, 1" x 3/4", SxS, 837-131G	Part:	10174
	Qty:	2
	Mfg:	
Reducer, Bushing, PVC 80, 1" x 3/4", SxS, 837-131G	Mfg Part:	
Nipple, Galv, 1" x Close	Part:	10216
	Qty:	1
	Mfg:	
Nipple, Galv, 1" x Close	Mfg Part:	
Nipple, Galv, 2" x Close NPT	Part:	10222
	Qty:	1
	Mfg:	
Nipple, Galv, 2" x Close NPT	Mfg Part:	
Nipple, Galv, 1-1/2" x Close	Part:	10281
	Qty:	1
	Mfg:	
Nipple, Galv, 1-1/2" x Close	Mfg Part:	
Reducer Bushing, Hex, Galv, 2"x3/4"	Part:	10412
	Qty:	1
	Mfg:	
Reducer Bushing, Hex, Galv, 2"x3/4"	Mfg Part:	
Camlock Fitting, Aluminum, 1-1/2", Part "C"	Part:	10490
Female Adapter x Hose Shank Cam Lock Fitting	Qty:	1
	Mfg:	Bayco Industries
Camlock Fitting, Aluminum, 1-1/2", Part "C"	Mfg Part:	
Camlock Fitting, Aluminum, 1-1/2", Part "F"	Part:	10491
Male Adapter x Male Thread Cam Lock Fitting	Qty:	1
	Mfg:	Bayco Industries
Camlock Fitting, Aluminum, 1-1/2", Part "F"	Mfg Part:	

Adapter, Tank, PVC, 1-1/2", FNPTxFNPT, 8172E-015 Bulkhead Fitting, Threaded, EPDM Adapter, Tank, PVC, 1-1/2", FNPTxFNPT, 8172E-015	Part: Qty: Mfg: Mfg Part:	10506 1
Adapter, Tank, PVC, 1-1/2", FNPTxFNPT, 8172E-015 Bulkhead Fitting, Threaded, EPDM Adapter, Tank, PVC, 1-1/2", FNPTxFNPT, 8172E-015	Part: Qty: Mfg: Mfg Part:	10506 1
Nipple, PVC 80, 1-1/2" x 8", TBE Sch 80 886-080 Nipple, PVC 80, 1-1/2" x 8", TBE Sch 80	Part: Qty: Mfg: Mfg Part:	10548 1
Nipple, PVC 80, 1-1/2" x 8", TBE Sch 80 886-080 Nipple, PVC 80, 1-1/2" x 8", TBE Sch 80	Part: Qty: Mfg: Mfg Part:	10548 1
Nipple, Galv, 1/2" x Close Nipple, Galv, 1/2" x Close	Part: Qty: Mfg: Mfg Part:	10619 6
Nipple, Galv, 1/2" x Close Nipple, Galv, 1/2" x Close	Part: Qty: Mfg: Mfg Part:	10619 5
Conduit, FSC BOX, 3/4", PVC Conduit, FSC BOX, 3/4", PVC	Part: Qty: Mfg: Mfg Part:	10638 1
Nipple, KC, Plated, 1/2" Nipple, KC, Plated, 1/2"	Part: Qty: Mfg: Mfg Part:	10675 1
Nipple, Galv, 1" x Short (2") Nipple, Galv, 1" x Short (2")	Part: Qty: Mfg: Mfg Part:	10704 1
Clamp, Hose, SS, 2", HAS32 Clamp, Hose, SS, 2", HAS32	Part: Qty: Mfg: Mfg Part:	10930 4
Clamp, Hose, SS, 2", HAS32 Clamp, Hose, SS, 2", HAS32	Part: Qty: Mfg: Mfg Part:	10930 2
Junction Box, PVC, 6" x 6" x 4" Junction Box, PVC, 6" x 6" x 4"	Part: Qty: Mfg: Mfg Part:	10959 4

Gauge, Magnehelic, 0-1"wc, 2001	Part:	11121
	Qty:	1
	Mfg:	Dwyer
Gauge, Magnehelic, 0-1"wc, 2001	Mfg Part:	
Nipple, Galv, 3/4" x 3"	Part:	11192
	Qty:	1
	Mfg:	
Nipple, Galv, 3/4" x 3"	Mfg Part:	
Nipple, KC, Plated, 1"	Part:	11210
	Qty:	1
	Mfg:	
Nipple, KC, Plated, 1"	Mfg Part:	
Reducer, Bushing, PVC 80, 1-1/2" x 1", SxS, 837-211G	Part:	11336
	Qty:	2
	Mfg:	
Reducer, Bushing, PVC 80, 1-1/2" x 1", SxS, 837-211G	Mfg Part:	
Nipple, KC, Plated, 1-1/2",	Part:	11347
	Qty:	1
	Mfg:	
Nipple, KC, Plated, 1-1/2",	Mfg Part:	
Pipe, PVC 80, 1/2"	Part:	11447
80-005	Qty:	10
	Mfg:	
Pipe, PVC 80, 1/2"	Mfg Part:	
Nipple, Galv, 3/4" x Close	Part:	11577
	Qty:	1
	Mfg:	
Nipple, Galv, 3/4" x Close	Mfg Part:	
Nipple, Galv, 3/4" x Close	Part:	11577
	Qty:	1
	Mfg:	
Nipple, Galv, 3/4" x Close	Mfg Part:	
Reducer, Bushing, PVC 80, 3/4" x 1/2", SxS, 837-101	Part:	11868
	Qty:	1
	Mfg:	
Reducer, Bushing, PVC 80, 3/4" x 1/2", SxS, 837-101	Mfg Part:	
Reducer, Bushing, PVC 80, 3/4" x 1/2", SxS, 837-101	Part:	11868
	Qty:	1
	Mfg:	
Reducer, Bushing, PVC 80, 3/4" x 1/2", SxS, 837-101	Mfg Part:	
Nipple, KC, Plated, 3/4"	Part:	12235
	Qty:	2
	Mfg:	
Nipple, KC, Plated, 3/4"	Mfg Part:	
Paint, Tray Liner, TL454	Part:	12255
	Qty:	4
	Mfg:	
Paint, Tray Liner, TL454	Mfg Part:	

Paint, Tray Liner, TL454	Part:	12255
	Qty:	3
	Mfg:	
Paint, Tray Liner, TL454	Mfg Part:	
Paint, Tray Liner, TL454	Part:	12255
	Qty:	3
	Mfg:	
Paint, Tray Liner, TL454	Mfg Part:	
Nipple, SS, 3/4" x Short	Part:	12335
	Qty:	2
	Mfg:	
Nipple, SS, 3/4" x Short	Mfg Part:	
Elbow, 90deg, PVC 40, 1/2", SxS, 406-005G	Part:	12443
	Qty:	2
	Mfg:	
Elbow, 90deg, PVC 40, 1/2", SxS, 406-005G	Mfg Part:	
Plug, PVC 80, 1/2", MPT 850-005	Part:	12820
	Qty:	1
	Mfg:	
Plug, PVC 80, 1/2", MPT	Mfg Part:	
Paint, Roller, 3106.081 (6) sleeve 10mm	Part:	12925
	Qty:	3
	Mfg:	
Paint, Roller, 3106.081 (6) sleeve	Mfg Part:	
Paint, Roller, 3106.081 (6) sleeve 10mm	Part:	12925
	Qty:	4
	Mfg:	
Paint, Roller, 3106.081 (6) sleeve	Mfg Part:	
Reducer, Bushing, PVC 80, 2" x 1/2", SxS, 837-247	Part:	13485
	Qty:	1
	Mfg:	
Reducer, Bushing, PVC 80, 2" x 1/2", SxS, 837-247	Mfg Part:	
Pipe, PVC 40, 4" 10ft Length , 40-040	Part:	13990
	Qty:	1
	Mfg:	
Pipe, PVC 40, 4"	Mfg Part:	
Pipe, PVC 40, 4" 10ft Length , 40-040	Part:	13990
	Qty:	10
	Mfg:	
Pipe, PVC 40, 4"	Mfg Part:	
Pipe, PVC 40, 4" 10ft Length , 40-040	Part:	13990
	Qty:	10
	Mfg:	
Pipe, PVC 40, 4"	Mfg Part:	
Hole Saw, Greenlee, Arbor, 1/2" Shank GRE 37156	Part:	14789
	Qty:	1
	Mfg:	
Hole Saw, Greenlee, Arbor, 1/2" Shank	Mfg Part:	

Strut, Slotted, 1-5/8" x 1-5/8"	Part:	15297
TB A1200HS10PGC	Qty:	20
	Mfg:	
Strut, Slotted, 1-5/8" x 1-5/8"	Mfg Part:	
Strut, Slotted, 1-5/8" x 1-5/8"	Part:	15297
TB A1200HS10PGC	Qty:	20
	Mfg:	
Strut, Slotted, 1-5/8" x 1-5/8"	Mfg Part:	
Strut, Clamp, 1" EMT/RIGID	Part:	15301
ERC SK165I	Qty:	50
	Mfg:	
Strut, Clamp, 1" EMT/RIGID	Mfg Part:	
Strut, Angle, 90 deg Bracket	Part:	15315
TB X289HDGC	Qty:	3
	Mfg:	
Strut, Angle, 90 deg Bracket	Mfg Part:	
Strut, Vinyl End Covers, 1-5/8"	Part:	15318
TB A804NEOPWH	Qty:	4
	Mfg:	
Strut, Vinyl End Covers, 1-5/8"	Mfg Part:	
Strut, Vinyl End Covers, 1-5/8"	Part:	15318
TB A804NEOPWH	Qty:	26
	Mfg:	
Strut, Vinyl End Covers, 1-5/8"	Mfg Part:	
Strut, Twirl Nuts, 3/8"	Part:	15323
TN228 ZN	Qty:	10
	Mfg:	
Strut, Twirl Nuts, 3/8"	Mfg Part:	
Strut, Angle, 3 Hole 90 deg Corner	Part:	15325
1-5/8" x 4-1/8"	Qty:	1
	Mfg:	
Strut, Angle, 3 Hole 90 deg Corner	Mfg Part:	
Coupling, PVC 80, 1/2", SxS, 829-005G	Part:	15621
	Qty:	1
	Mfg:	
Coupling, PVC 80, 1/2", SxS, 829-005G	Mfg Part:	
Reducer, Bushing, Galv, 3/4" x 1/2"	Part:	15990
Hex	Qty:	2
	Mfg:	
Reducer, Bushing, Galv, 3/4" x 1/2"	Mfg Part:	
Strain Relief, Connector, PVC, 1/2"	Part:	16884
TSRC10, panel relief	Qty:	2
Outdoor use, not for water systems	Mfg:	
Strain Relief, Connector, PVC, 1/2"	Mfg Part:	
Hole Saw, 1-3/4"	Part:	16917
	Qty:	1
	Mfg:	
Hole Saw, 1-3/4"	Mfg Part:	

Reinforced, Adapter, PVC 80, Female, 1-1/2", FNPTxS Fitting, transition, socket x FNPT SS Reinforced, Adapter, PVC 80, Female, 1-1/2", FNPTxS	Part: Qty: Mfg: Mfg Part:	17053 1 spears
Hose Barb, Brass, 1/4" x 1/4", NPT x Hose, 125-4B 1 Hose Barb, Brass, 1/4" x 1/4", NPT x Hose, 125-4B	Part: Qty: Mfg: Mfg Part:	18070 1
Reinforced, Adapter, PVC 80, Female, 3/4", FNPTxS Fitting, transition, socket x SS Reinforced, Adapter, PVC 80, Female, 3/4", FNPTxS	Part: Qty: Mfg: Mfg Part:	19057 2
Reinforced, Adapter, PVC 80, Female, 3/4", FNPTxS Fitting, transition, socket x SS Reinforced, Adapter, PVC 80, Female, 3/4", FNPTxS	Part: Qty: Mfg: Mfg Part:	19057 1
Glasses, Safety, Clear Antifog Glasses, Safety, Clear Antifog	Part: Qty: Mfg: Mfg Part:	19128 1
DIN Rail, Perforatored, NS 35/7,5 PHX 0801733 2m length pcs, Sold and Priced by the meter DIN Rail, Perforatored, NS 35/7,5 PHX 0801733	Part: Qty: Mfg: Mfg Part:	19168 2
Nipple, Brass, 1/2" x 3" Nipple, Brass, 1/2" x 3"	Part: Qty: Mfg: Mfg Part:	19315 1
Nipple, Brass, 1/4" x Close Nipple, Brass, 1/4" x Close	Part: Qty: Mfg: Mfg Part:	19317 2
Conduit, Aluminum, 1/2", UL Listed Conduit, Aluminum, 1/2", UL Listed	Part: Qty: Mfg: Mfg Part:	19370 1
Hose Barb, Brass, 1/4" x 1/8", Male Hose Barb, Brass, 1/4" x 1/8", Male	Part: Qty: Mfg: Mfg Part:	19425 4
Screw, Floor, Flat Head, 3" #8 Black Black 2000/pail Screw, Floor, Flat Head, 3" #8 Black	Part: Qty: Mfg: Mfg Part:	19676 200
Screw, Floor, Flat 1-1/2" #8 Screw, Floor, Flat 1-1/2" #8	Part: Qty: Mfg: Mfg Part:	19677 500

Clamp, Hose, SS, 1/2", HAS8	Part:	20158
	Qty:	4
	Mfg:	
Clamp, Hose, SS, 1/2", HAS8	Mfg Part:	
Caulking, Mulco: Supra White	Part:	20163
White	Qty:	1
Supply MSDS	Mfg:	
Caulking, Mulco: Supra White	Mfg Part:	
Caulking, Mulco: Supra Cement Grey	Part:	20166
Cement Grey	Qty:	1
Supply MSDS	Mfg:	
Caulking, Mulco: Supra Cement Grey	Mfg Part:	
Brush, Paint, Wood Handle, 2"	Part:	20232
	Qty:	1
	Mfg:	
Brush, Paint, Wood Handle, 2"	Mfg Part:	
Reinforced, Adapter, PVC 80, Female, 1/4", FNPTxS	Part:	21400
Fitting, transition, socket x SS	Qty:	1
	Mfg:	
Reinforced, Adapter, PVC 80, Female, 1/4", FNPTxS	Mfg Part:	
Switch, Level, Tether Weight	Part:	21552
Cast Iron	Qty:	2
fits PB20W4000	Mfg:	
Switch, Level, Tether Weight	Mfg Part:	
Gloves, Polyethelene Knit, Medium	Part:	21912
Polyurethane dipped palm, Cut Level 3	Qty:	1
Size 8 - Green cuff	Mfg:	
Gloves, Polyethelene Knit, Medium	Mfg Part:	
Gloves, Polyethelene Knit, Medium	Part:	21912
Polyurethane dipped palm, Cut Level 3	Qty:	1
Size 8 - Green cuff	Mfg:	
Gloves, Polyethelene Knit, Medium	Mfg Part:	
Gloves, Polyethelene Knit, Large	Part:	21913
Polyurethane dipped palm, Cut Level 3	Qty:	2
Size 9 - Brown Cuff	Mfg:	
Gloves, Polyethelene Knit, Large	Mfg Part:	
Hole Saw, 1/2" Hole Cutter (7/8)	Part:	22557
36-301 Ideal	Qty:	1
	Mfg:	
Hole Saw, 1/2" Hole Cutter (7/8)	Mfg Part:	
Hole Saw, 1/2" Hole Cutter (7/8)	Part:	22557
36-301 Ideal	Qty:	1
	Mfg:	
Hole Saw, 1/2" Hole Cutter (7/8)	Mfg Part:	
Hole Saw, 1/2" Hole Cutter (7/8)	Part:	22557
36-301 Ideal	Qty:	1
	Mfg:	
Hole Saw, 1/2" Hole Cutter (7/8)	Mfg Part:	

Hose, Suction, EPDM, Green, 2" Green Helix, 65psi -40 to 160F temp Hose, Suction, EPDM, Green, 2"	Part: Qty: Mfg: Mfg Part:	23451 6
Paint, Roller, Roller foam refill, 4" 10 pack 1655-550 Paint, Roller, Roller foam refill, 4"	Part: Qty: Mfg: Mfg Part:	23522 4
Paint, Roller, Roller foam refill, 4" 10 pack 1655-550 Paint, Roller, Roller foam refill, 4"	Part: Qty: Mfg: Mfg Part:	23522 3
Nail, PAS SM 2-3/8" 097394 Nail, PAS SM 2-3/8" 097394	Part: Qty: Mfg: Mfg Part:	23625 12
Nail, PAS SM 3-1/4" 404058 3M Nail, PAS SM 3-1/4" 404058 3M	Part: Qty: Mfg: Mfg Part:	23626 10
Tape, Masking, 2" (48mm x 55m) Tape, Masking, 2" (48mm x 55m)	Part: Qty: Mfg: Mfg Part:	23668 1
Tape, Masking, 2" (48mm x 55m) Tape, Masking, 2" (48mm x 55m)	Part: Qty: Mfg: Mfg Part:	23668 1
Washer, BS, Flat, 5/16", Plated Washer, BS, Flat, 5/16", Plated	Part: Qty: Mfg: Mfg Part:	23677 160
Washer, BS, Flat, 3/8", Plated Washer, BS, Flat, 3/8", Plated	Part: Qty: Mfg: Mfg Part:	23678 100
Washer, BS, Flat, 3/8", Plated Washer, BS, Flat, 3/8", Plated	Part: Qty: Mfg: Mfg Part:	23678 25
Washer, BS, Flat, 3/8", Plated Washer, BS, Flat, 3/8", Plated	Part: Qty: Mfg: Mfg Part:	23678 150
Washer, BS, Lock, Spring, 3/8", Plated Washer, BS, Lock, Spring, 3/8", Plated	Part: Qty: Mfg: Mfg Part:	23679 100

Washer, BS, Lock, Spring, 3/8", Plated	Part:	23679
	Qty:	25
	Mfg:	
Washer, BS, Lock, Spring, 3/8", Plated	Mfg Part:	
Screw, Hex Head Cap, NC, GR5, Plated, 3/8-16x2"	Part:	23686
	Qty:	4
	Mfg:	
Screw, Hex Head Cap, NC, GR5, Plated, 3/8-16x2"	Mfg Part:	
Washer, BS, Fender, 1/4", Plated	Part:	23692
1-1/4 OD	Qty:	8
	Mfg:	
Washer, BS, Fender, 1/4", Plated	Mfg Part:	
Drill Bit 150, 3/16" FRAC 44012	Part:	23704
	Qty:	1
	Mfg:	
Drill Bit 150, 3/16" FRAC 44012	Mfg Part:	
Paint, Spray, Blue, Deep, Hi -Perf 15 oz	Part:	23719
	Qty:	1
	Mfg:	
Paint, Spray, Blue, Deep, Hi -Perf 15 oz	Mfg Part:	
Wire Term, Hook, SCR Insulated, #8-10, 16-14	Part:	23728
	Qty:	20
	Mfg:	
Wire Term, Hook, SCR Insulated, #8-10, 16-14	Mfg Part:	
Hose, Braided, PVC, Kuri Tec, K3150 or equivalent, 1/2" ID	Part:	23735
0.71" OD, 250 PSI, +25F to +150F	Qty:	5
FDA USDA 3-A and NSF-51	Mfg:	
Hose, Braided, PVC, Kuri Tec, K3150 or equivalent, 1/2" ID	Mfg Part:	
Terminal, PHX 3030420	Part:	23742
Partition Plate, Spring Cage, Feed Thru, 30A	Qty:	1
	Mfg:	Phoenix Contact
Terminal, PHX 3030420	Mfg Part:	
Screw, Hex Head Cap, NC, GR5, Plated, 3/8-16x5-1/2"	Part:	23755
	Qty:	4
	Mfg:	
Screw, Hex Head Cap, NC, GR5, Plated, 3/8-16x5-1/2"	Mfg Part:	
Paint, Spray, Black, Gloss, Rusto Ind CH 1679, 12 oz	Part:	23763
	Qty:	1
	Mfg:	
Paint, Spray, Black, Gloss, Rusto Ind CH 1679, 12 oz	Mfg Part:	
Paint, Spray, Yellow, Safety, Rusto Ind CH 1644, 12 oz	Part:	23764
	Qty:	1
	Mfg:	
Paint, Spray, Yellow, Safety, Rusto Ind CH 1644, 12 oz	Mfg Part:	
Paint, Spray, Yellow, Safety, Rusto Ind CH 1644, 12 oz	Part:	23764
	Qty:	1
	Mfg:	
Paint, Spray, Yellow, Safety, Rusto Ind CH 1644, 12 oz	Mfg Part:	

Washer, BS, Fender, 10BS (3/16"), Plated 3/4" OD Washer, BS, Fender, 10BS (3/16"), Plated	Part: Qty: Mfg: Mfg Part:	23777 50
Cleaner, Citrus, Lloyds 51120, 20oz Cleaner, Citrus, Lloyds 51120, 20oz	Part: Qty: Mfg: Mfg Part:	23781 1
Washer, BS, Lockwasher, Tooth Ext, 10 (3/16"), Plated Washer, BS, Lockwasher, Tooth Ext, 10 (3/16"), Plated	Part: Qty: Mfg: Mfg Part:	23817 10
Screw, Hex Head Cap, NC, GR5, Plated, 1/4-20x3/4" Screw, Hex Head Cap, NC, GR5, Plated, 1/4-20x3/4"	Part: Qty: Mfg: Mfg Part:	23820 1
Screw, Hex Head Cap, NC, GR5, Plated, 1/4-20x3/4" Screw, Hex Head Cap, NC, GR5, Plated, 1/4-20x3/4"	Part: Qty: Mfg: Mfg Part:	23820 8
Screw, Drill & Tap, Hex/Washer, 1/4-14x1" Screw, Drill & Tap, Hex/Washer, 1/4-14x1"	Part: Qty: Mfg: Mfg Part:	23824 4
Clamp, Hose, SS, 3/8", MAH6 Clamp, Hose, SS, 3/8", MAH6	Part: Qty: Mfg: Mfg Part:	23853 2
Screw, Drill & Tap, Waferhead, 12-24x3" Screw, Drill & Tap, Waferhead, 12-24x3"	Part: Qty: Mfg: Mfg Part:	23859 100
Screw, Drill & Tap, Waferhead, 12-24x3" Screw, Drill & Tap, Waferhead, 12-24x3"	Part: Qty: Mfg: Mfg Part:	23859 100
Screw, Hex Head Cap, NC, GR5, Plated, 1/2-13x2" Screw, Hex Head Cap, NC, GR5, Plated, 1/2-13x2"	Part: Qty: Mfg: Mfg Part:	23862 4
Screw, Wood/Met,PH, Soc, 10x1" Screw, Wood/Met,PH, Soc, 10x1"	Part: Qty: Mfg: Mfg Part:	23959 100
Conduit, Rigid, PVC, 1" 10' length Conduit, Rigid, PVC, 1"	Part: Qty: Mfg: Mfg Part:	23966 100

Conduit, Rigid, PVC, 1" 10' length Conduit, Rigid, PVC, 1"	Part: Qty: Mfg: Mfg Part:	23966 -50
Conduit, Rigid, PVC, 3/4" 10' length Conduit, Rigid, PVC, 3/4"	Part: Qty: Mfg: Mfg Part:	23967 50
Conduit, Rigid, PVC, 3/4" 10' length Conduit, Rigid, PVC, 3/4"	Part: Qty: Mfg: Mfg Part:	23967 30
Conduit, Rigid, PVC, 3/4" 10' length Conduit, Rigid, PVC, 3/4"	Part: Qty: Mfg: Mfg Part:	23967 10
Conduit, Rigid, PVC, 3/4" 10' length Conduit, Rigid, PVC, 3/4"	Part: Qty: Mfg: Mfg Part:	23967 40
Conduit, Rigid, PVC, 1/2" 10' length Conduit, Rigid, PVC, 1/2"	Part: Qty: Mfg: Mfg Part:	23968 100
Conduit, Tee, PVC, 3/4" Conduit, Tee, PVC, 3/4"	Part: Qty: Mfg: Mfg Part:	23969 1
Conduit, Tee, PVC 1" Conduit, Tee, PVC 1"	Part: Qty: Mfg: Mfg Part:	23970 1
Bit Driver, 7/16" Mag, 2-9/16"L Bit Driver, 7/16" Mag, 2-9/16"L	Part: Qty: Mfg: Mfg Part:	23983 2
Bit Driver, 1/2" Mag, 2-9/16"L Bit Driver, 1/2" Mag, 2-9/16"L	Part: Qty: Mfg: Mfg Part:	23984 1
Conduit, Adapter, Male, PVC, 1/2" Conduit, Adapter, Male, PVC, 1/2"	Part: Qty: Mfg: Mfg Part:	23993 10
Conduit, Adapter, Male, PVC, 3/4" Conduit, Adapter, Male, PVC, 3/4"	Part: Qty: Mfg: Mfg Part:	24000 10

Conduit, Adapter, Male, PVC, 3/4"	Part:	24000
	Qty:	10
	Mfg:	
Conduit, Adapter, Male, PVC, 3/4"	Mfg Part:	
Conduit, Elbow, 90deg, PVC, 3/4"	Part:	24004
	Qty:	6
	Mfg:	
Conduit, Elbow, 90deg, PVC, 3/4"	Mfg Part:	
Conduit, Elbow, 90deg, PVC, 3/4"	Part:	24004
	Qty:	5
	Mfg:	
Conduit, Elbow, 90deg, PVC, 3/4"	Mfg Part:	
Conduit, Adapter, Male, PVC, 1"	Part:	24005
	Qty:	5
	Mfg:	
Conduit, Adapter, Male, PVC, 1"	Mfg Part:	
Conduit, Adapter, Male, PVC, 1"	Part:	24005
	Qty:	10
	Mfg:	
Conduit, Adapter, Male, PVC, 1"	Mfg Part:	
Conduit, Coupling, PVC, 1"	Part:	24006
	Qty:	10
	Mfg:	
Conduit, Coupling, PVC, 1"	Mfg Part:	
Conduit, Elbow, 90deg, PVC, 1"	Part:	24009
	Qty:	1
	Mfg:	
Conduit, Elbow, 90deg, PVC, 1"	Mfg Part:	
Conduit, Strap, PVC, 2 Hole, 3/4"	Part:	24022
	Qty:	20
	Mfg:	
Conduit, Strap, PVC, 2 Hole, 3/4"	Mfg Part:	
Conduit, Strap, PVC, 2 Hole, 3/4"	Part:	24022
	Qty:	30
	Mfg:	
Conduit, Strap, PVC, 2 Hole, 3/4"	Mfg Part:	
Conduit, Strap, PVC, 2 Hole, 3/4"	Part:	24022
	Qty:	6
	Mfg:	
Conduit, Strap, PVC, 2 Hole, 3/4"	Mfg Part:	
Washer, BS, Flat, 1/4", Plated	Part:	24066
	Qty:	8
	Mfg:	
Washer, BS, Flat, 1/4", Plated	Mfg Part:	
Conduit, Coupling, PVC, 3/4"	Part:	24100
	Qty:	10
	Mfg:	
Conduit, Coupling, PVC, 3/4"	Mfg Part:	

Conduit, Coupling, PVC, 3/4"	Part:	24100
	Qty:	10
	Mfg:	
Conduit, Coupling, PVC, 3/4"	Mfg Part:	
Paint, Spray, White, Gloss, Rusto Ind CH 1692, 12 oz	Part:	24200
	Qty:	1
	Mfg:	
Paint, Spray, White, Gloss, Rusto Ind CH 1692, 12 oz	Mfg Part:	
Nut, Hex, 1/4-20, Plated	Part:	24272
	Qty:	8
	Mfg:	
Nut, Hex, 1/4-20, Plated	Mfg Part:	
Hole saw, pilot, drill, 1/4"x4-1/2" notched	Part:	24319
	Qty:	1
	Mfg:	
Hole saw, pilot, drill, 1/4"x4-1/2" notched	Mfg Part:	
Screw, hex head cap, NC, GR5, Plated, 3/8"-16 x 1-1/2"	Part:	24449
	Qty:	4
	Mfg:	
Screw, hex head cap, NC, GR5, Plated, 3/8"-16 x 1-1/2"	Mfg Part:	
Locknut, Electrical, 3/4"	Part:	24503
	Qty:	5
	Mfg:	
Locknut, Electrical, 3/4"	Mfg Part:	
Locknut, Electrical, 3/4"	Part:	24503
	Qty:	20
	Mfg:	
Locknut, Electrical, 3/4"	Mfg Part:	
Washer, BS, Lock, Spring, 1/2", Plated	Part:	24512
	Qty:	4
	Mfg:	
Washer, BS, Lock, Spring, 1/2", Plated	Mfg Part:	
Screw, Drill & Tap, Pan Head, 10-16x1"	Part:	24557
	Qty:	400
	Mfg:	
Screw, Drill & Tap, Pan Head, 10-16x1"	Mfg Part:	
Screw, Hex Head Cap, NC, GR5, Plated, 1/4-20x1-1/4"	Part:	24679
	Qty:	4
	Mfg:	
Screw, Hex Head Cap, NC, GR5, Plated, 1/4-20x1-1/4"	Mfg Part:	
Conduit, Coupling, Aluminum, 1/2"	Part:	24840
	Qty:	1
	Mfg:	
Conduit, Coupling, Aluminum, 1/2"	Mfg Part:	
Conduit, Strap, EMT, 1 hole, 1/2"	Part:	24915
	Qty:	10
	Mfg:	
Conduit, Strap, EMT, 1 hole, 1/2"	Mfg Part:	

Conduit, Union, XPF, Aluminum, 3/4" Male x Female	Part:	24979
	Qty:	1
	Mfg:	
Conduit, Union, XPF, Aluminum, 3/4" Male x Female	Mfg Part:	
Conduit, Sealing Ring, SS, 3/8" - 1/2"	Part:	25019
	Qty:	50
	Mfg:	
Conduit, Sealing Ring, SS, 3/8" - 1/2"	Mfg Part:	
Conduit, Sealing Ring, SS, 3/4" w/Buna N	Part:	25020
	Qty:	10
	Mfg:	
Conduit, Sealing Ring, SS, 3/4"	Mfg Part:	
Conduit, Sealing Ring, SS, 3/4" w/Buna N	Part:	25020
	Qty:	10
	Mfg:	
Conduit, Sealing Ring, SS, 3/4"	Mfg Part:	
Conduit, Sealing Ring, SS, 1" w/ Buna N	Part:	25021
	Qty:	10
	Mfg:	
Conduit, Sealing Ring, SS, 1"	Mfg Part:	
Conduit, Connector, Straight, Liquidtite, Insulated, 1/2"	Part:	25027
	Qty:	10
	Mfg:	
Conduit, Connector, Straight, Liquidtite, Insulated, 1/2"	Mfg Part:	
Conduit, Connector, 90deg, Liquidtite, Insulated, 1/2"	Part:	25030
	Qty:	10
	Mfg:	
Conduit, Connector, 90deg, Liquidtite, Insulated, 1/2"	Mfg Part:	
Conduit, Liquidtite, FM, Gray, 1/2"	Part:	25047
	Qty:	30
	Mfg:	
Conduit, Liquidtite, FM, Gray, 1/2"	Mfg Part:	
Wire, Stranded, T90, #14 AWG, Green	Part:	25148
	Qty:	305
	Mfg:	
Wire, Stranded, T90, #14 AWG, Green	Mfg Part:	
Wire Term, Ring, SCR Insulated, #12-1/4, 12-10	Part:	25203
	Qty:	20
	Mfg:	
Wire Term, Ring, SCR Insulated, #12-1/4, 12-10	Mfg Part:	
Locknut, Electrical, 1"	Part:	25214
	Qty:	10
	Mfg:	
Locknut, Electrical, 1"	Mfg Part:	
Knockout Filler. Type 1, CS, Painted, 1/2"	Part:	25220
	Qty:	3
	Mfg:	
Knockout Filler. Type 1, CS, Painted, 1/2"	Mfg Part:	

Tape, Insulating, 3/4' X 60', Black	Part:	25234
	Qty:	1
	Mfg:	
Tape, Insulating, 3/4' X 60', Black	Mfg Part:	
Tape, Insulating, 3/4' X 60', Black	Part:	25234
	Qty:	1
	Mfg:	
Tape, Insulating, 3/4' X 60', Black	Mfg Part:	
Marker, Sharpie, Black, Fine Point	Part:	25297
	Qty:	1
	Mfg:	
Marker, Sharpie, Black, Fine Point	Mfg Part:	
Conduit, Connector, 45deg, Liquidtite, Insulated, 1/2"	Part:	25326
	Qty:	10
	Mfg:	
Conduit, Connector, 45deg, Liquidtite, Insulated, 1/2"	Mfg Part:	
Conduit, Connector, 45deg, Liquidtite, Insulated, 1/2"	Part:	25326
	Qty:	1
	Mfg:	
Conduit, Connector, 45deg, Liquidtite, Insulated, 1/2"	Mfg Part:	
Keystock, Zinc Plated, 3/4" x 3/4" x 12", square	Part:	25394
	Qty:	1
	Mfg:	
Keystock, Zinc Plated, 3/4" x 3/4" x 12", square	Mfg Part:	
Cement, PVC, Electrical 250 ML	Part:	25399
	Qty:	1
	Mfg:	
Cement, PVC, Electrical	Mfg Part:	
Nut, Lock, SS, Nylon Insert, 3/8"-16, 18-8	Part:	25446
	Qty:	25
	Mfg:	
Nut, Lock, SS, Nylon Insert, 3/8"-16, 18-8	Mfg Part:	
Lug, Electrical, 2-#14 AWG, 1 hole, ADR2 or equivalent	Part:	25460
	Qty:	2
	Mfg:	
Lug, Electrical, 2-#14 AWG, 1 hole, ADR2 or equivalent	Mfg Part:	
Strain Relief, Arlington, Low Profile , 1/2" ARL 50LPCGBAG	Part:	25468
	Qty:	4
	Mfg:	
Strain Relief, Arlington, Low Profile , 1/2"	Mfg Part:	
Wire, Nut, Splice Cap Crimp Term, IDI 2006S	Part:	25477
	Qty:	100
	Mfg:	
Wire, Nut, Splice Cap Crimp Term, IDI 2006S	Mfg Part:	
Wire, Nut, Splice Cap Insulated for 2006S, IDI 2007C	Part:	25478
	Qty:	100
	Mfg:	
Wire, Nut, Splice Cap Insulated for 2006S, IDI 2007C	Mfg Part:	

Relay, Jumper Busbar, 2P	Part:	25511
	Qty:	5
	Mfg:	
Relay, Jumper Busbar, 2P	Mfg Part:	
Washer, BS, Lock, Spring, 1/4", Plated	Part:	25556
	Qty:	8
	Mfg:	
Washer, BS, Lock, Spring, 1/4", Plated	Mfg Part:	
Label, Terminal, Plastic, UCT-TM 6	Part:	25574
	Qty:	2
	Mfg:	
Label, Terminal, Plastic, UCT-TM 6	Mfg Part:	
Label, Terminal, Plastic, UCT-TM 6	Part:	25574
	Qty:	1
	Mfg:	
Label, Terminal, Plastic, UCT-TM 6	Mfg Part:	
Rivet, Nylon, Duct, NYLPUSH for mounting PAN NR-1M or equivalent	Part:	25627
	Qty:	20
	Mfg:	
Rivet, Nylon, Duct, NYLPUSH for mounting	Mfg Part:	
Wire, Marrette, Orange Connector, 331P 100/box	Part:	25707
	Qty:	100
	Mfg:	
Wire, Marrette, Orange Connector, 331P	Mfg Part:	
Wire, Marrette, Resimarr Connector, 833D 500/box	Part:	25709
	Qty:	30
	Mfg:	
Wire, Marrette, Resimarr Connector, 833D	Mfg Part:	
Adapter, Power, Heavy Duty, HC-NPT-1/2-M20	Part:	25842
	Qty:	2
	Mfg:	
Adapter, Power, Heavy Duty, HC-NPT-1/2-M20	Mfg Part:	
Screw, Hex Head Cap, NC, GR5, Plated, 3/8-16x5"	Part:	25873
	Qty:	4
	Mfg:	
Screw, Hex Head Cap, NC, GR5, Plated, 3/8-16x5"	Mfg Part:	
Knockout Filler. Type 1, CS, Painted, 3/4"	Part:	26284
	Qty:	6
	Mfg:	
Knockout Filler. Type 1, CS, Painted, 3/4"	Mfg Part:	
Label, Decal, Watch Your Step Black and Yellow	Part:	26454
	Qty:	4
	Mfg:	
Label, Decal, Watch Your Step	Mfg Part:	
Label, Decal, Watch Your Step Black and Yellow	Part:	26454
	Qty:	4
	Mfg:	
Label, Decal, Watch Your Step	Mfg Part:	

Bit Driver, 9/16" Mag, 2-9/16"L	Part:	26619
	Qty:	1
	Mfg:	
Bit Driver, 9/16" Mag, 2-9/16"L	Mfg Part:	
Bit Driver, 9/16" Mag, 2-9/16"L	Part:	26619
	Qty:	1
	Mfg:	
Bit Driver, 9/16" Mag, 2-9/16"L	Mfg Part:	
Bit, Milwaukee, Extension, 12"x1/4" All Hex	Part:	26912
	Qty:	1
	Mfg:	
Bit, Milwaukee, Extension, 12"x1/4" All Hex	Mfg Part:	
Drill Bit, 3/8" Extra long 12" OAL	Part:	27120
	Qty:	1
	Mfg:	
Drill Bit, 3/8" Extra long 12" OAL	Mfg Part:	
Wire Term, Spade, SCR Insulated, #10, 12-10AWG	Part:	27330
	Qty:	20
	Mfg:	
Wire Term, Spade, SCR Insulated, #10, 12-10AWG	Mfg Part:	
Duct, Finger, 1-1/2" x 3" - does not include cover Sold in 6' length	Part:	27396
	Qty:	2
	Mfg:	
Duct, Finger, 1-1/2" x 3" - does not include cover	Mfg Part:	
Duct, Finger, Cover, 1-1/2" for 27396 Sold in 6' length	Part:	27397
	Qty:	6
	Mfg:	
Duct, Finger, Cover, 1-1/2" for 27396	Mfg Part:	
Duct, Finger, 2" x 3" - does not include cover(27399) Sold in 6' lenghts	Part:	27398
	Qty:	2
	Mfg:	
Duct, Finger, 2" x 3" - does not include cover(27399)	Mfg Part:	
Label, Pipe Marker, arrow green and white single	Part:	27672
	Qty:	25
	Mfg:	
Label, Pipe Marker, arrow green and white single	Mfg Part:	
Paint, spectracron 110 primer, grey	Part:	29153
	Qty:	2
	Mfg:	
Paint, spectracron 110 primer, grey	Mfg Part:	
Bit, Power Drive, #2 x Square - 3"	Part:	29383
	Qty:	1
	Mfg:	
Bit, Power Drive, #2 x Square - 3"	Mfg Part:	
Terminal, End Cover, PHX 3030462 D-STTB 4,For double spring cage PHX 3031429	Part:	33799
	Qty:	3
	Mfg:	
Terminal, End Cover, PHX 3030462	Mfg Part:	

Terminal, End Cover, PHX 3030462 D-STTB 4,For double spring cage PHX 3031429 Terminal, End Cover, PHX 3030462	Part: Qty: Mfg: Mfg Part:	33799 1
Terminal, End Cover, PHX 3030462 D-STTB 4,For double spring cage PHX 3031429 Terminal, End Cover, PHX 3030462	Part: Qty: Mfg: Mfg Part:	33799 3
Strut, Angle, 3 Hole 90 deg Corner, modified for oiler Strut, Angle, 3 Hole 90 deg Corner, modified for oiler	Part: Qty: Mfg: Mfg Part:	37397 1
Valve, Ball, PVC, 1-1/2", True-Union, FPM O-rings SOC ends included Afflu-O, NSF61 Valve, Ball, PVC, 1-1/2", True-Union, FPM O-rings	Part: Qty: Mfg: Mfg Part:	37661 1
Junction Box, 6" x 6" x 4", Hammond EJ664 with Back Panel and Hinged Lid, NEMA 4 Junction Box, 6" x 6" x 4", Hammond EJ664	Part: Qty: Mfg: Mfg Part:	37975 1
Junction Box, 12" x 10" x 5", Hammond EJ12105 with Back Panel and Hinged Lid, NEMA 4 Junction Box, 12" x 10" x 5", Hammond EJ12105	Part: Qty: Mfg: Mfg Part:	38430 1
Washer, Unistrut, Square, 3/8" with magnet T-B AB241M 3/8EG Washer, Unistrut, Square, 3/8" with magnet	Part: Qty: Mfg: Mfg Part:	40469 8
Terminal, PHX 3036039 Ground, Spring Cage, Feed Thru, 28-12AWG Double-level, STTB 4-PE Terminal, PHX 3036039	Part: Qty: Mfg: Mfg Part:	42231 4
Screw, Machine, FH, 10-32x1/2" Socket Machine Screw, Machine, FH, 10-32x1/2" Socket Machine	Part: Qty: Mfg: Mfg Part:	42785 30
Paint, Interior/Exterior, Moonlight (white) Rona ECO recycled paint Moonlight (white) 354804 , 1 Gallon Paint, Interior/Exterior, Moonlight (white)	Part: Qty: Mfg: Mfg Part:	42787 1
Conduit, FS BOX, 3/4", PVC Conduit, FS BOX, 3/4", PVC	Part: Qty: Mfg: Mfg Part:	E1066 2
Conduit, FS BOX, 3/4", PVC Conduit, FS BOX, 3/4", PVC	Part: Qty: Mfg: Mfg Part:	E1066 1

Clamp, Hose, SS, 1-3/4", HAS28	Part:	M1372
	Qty:	10
	Mfg:	
Clamp, Hose, SS, 1-3/4", HAS28	Mfg Part:	
Coupling, PVC 40, 4", SxS, 429-040G	Part:	P1002
	Qty:	1
	Mfg:	
Coupling, PVC 40, 4", SxS, 429-040G	Mfg Part:	
Elbow, 90deg, PVC 80, 1-1/2", SxS, 806-015G	Part:	P1007
	Qty:	1
	Mfg:	
Elbow, 90deg, PVC 80, 1-1/2", SxS, 806-015G	Mfg Part:	
Nipple, Galv, 1" x 4"	Part:	P1012
	Qty:	1
	Mfg:	
Nipple, Galv, 1" x 4"	Mfg Part:	
Reducer, Bushing, Galv, 2" x 1"	Part:	P1020
Hex	Qty:	1
	Mfg:	
Reducer, Bushing, Galv, 2" x 1"	Mfg Part:	
Reducer, Bushing, Galv, 2" x 1-1/2"	Part:	P1053
Hex	Qty:	1
	Mfg:	
Reducer, Bushing, Galv, 2" x 1-1/2"	Mfg Part:	
Elbow, 90deg, Galv, 1-1/2"	Part:	P1057
	Qty:	1
	Mfg:	
Elbow, 90deg, Galv, 1-1/2"	Mfg Part:	
Elbow, 90deg, Galv, 2"	Part:	P1058
	Qty:	1
	Mfg:	
Elbow, 90deg, Galv, 2"	Mfg Part:	
Tee, Galv, 1"	Part:	P1063
	Qty:	1
	Mfg:	
Tee, Galv, 1"	Mfg Part:	
Tee, PVC 80, 2", SxSxS, 801-020G	Part:	P1156
	Qty:	1
	Mfg:	
Tee, PVC 80, 2", SxSxS, 801-020G	Mfg Part:	
Adapter, Tank, PVC, 1/2", Threaded, FNPT x FNPT	Part:	P1166
Bulkhead Fitting, EPDM Gasket	Qty:	2
	Mfg:	
Adapter, Tank, PVC, 1/2", Threaded, FNPT x FNPT	Mfg Part:	
Tee, PVC 80, 1-1/2", SxSxS, 801-015G	Part:	P1172
	Qty:	1
	Mfg:	
Tee, PVC 80, 1-1/2", SxSxS, 801-015G	Mfg Part:	

Coupling, PVC 80, 1-1/2", SxS, 829-015G	Part:	P1175
	Qty:	1
	Mfg:	
Coupling, PVC 80, 1-1/2", SxS, 829-015G	Mfg Part:	
Pipe, PVC 80, 1"	Part:	P1189
80-010,	Qty:	10
	Mfg:	
Pipe, PVC 80, 1"	Mfg Part:	
Pipe, PVC 80, 2"	Part:	P1190
80-020	Qty:	10
	Mfg:	
Pipe, PVC 80, 2"	Mfg Part:	
Pipe, PVC 80, 1-1/2"	Part:	P1211
80-015	Qty:	5
	Mfg:	
Pipe, PVC 80, 1-1/2"	Mfg Part:	
Elbow, 90deg, PVC 40, 4", SxS, 406-040G	Part:	P1213
	Qty:	2
	Mfg:	
Elbow, 90deg, PVC 40, 4", SxS, 406-040G	Mfg Part:	

Sludge Tank

Module Code: 12900

-

Eductor, Polymer, PE-1 Polymer Eductor	Part:	27413
	Qty:	1
	Mfg:	
---	Mfg Part:	
Misc Part, Mechanical Component	Part:	35060
	Qty:	1
	Mfg:	
GearMotor for MYDL131 System Gearmotor:SEW, including UL CSA 575V 3P 60hz	Mfg Part:	
Progress invoice payment milestone:	Part:	37428
Fabrications	Qty:	1
	Mfg:	
30% UPON ORDER - NET 0	Mfg Part:	---
Progress invoice payment milestone:	Part:	37428
Fabrications	Qty:	1
	Mfg:	
70% UPON READINESS TO SHIP - NET 0	Mfg Part:	

Backflow Preven

Backflow Preventer, 1/2", 007M1QT	Part:	37390
Watts Series LF007, Double Check Valve Assembly	Qty:	1
CSA, AWWA, ASSE Approved	Mfg:	
---	Mfg Part:	SO0063230

CC-0901

Calibration column, 1000mL 0-16gph	Part:	26664
PVC fixed ends	Qty:	1
	Mfg:	
	Mfg Part:	KF-1000ML

Eductor

Eductor, Polymer, PE-1 Polymer Eductor	Part:	27413
	Qty:	1
	Mfg:	
---	Mfg Part:	
PE-1 Funnel 10" diameter	Part:	28331
	Qty:	1
	Mfg:	
---	Mfg Part:	PE1-FUNNEL

Hopper

Casters, For Dumping Hopper, Uline, H-2112	Part:	38511
Set of 4 Steel Casters, 6" Diameter	Qty:	1
	Mfg:	
---	Mfg Part:	H-2112

Hopper, Dumping, Steel, Uline, H-6755	Part:	41784
1 Cubic Yard, 4000 lbs capacity, 61"Lx42"Wx43"H	Qty:	1
	Mfg:	
All-welded steel construction.Simply pull cable from the seat of your forklift to release hopper.Safety chain secures hopper to forklift.	Mfg Part:	H-6755

Hose

Hose, Suction, EPDM, Green, 2"	Part:	23451
Green Helix, 65psi -40 to 160F temp	Qty:	10
	Mfg:	
---	Mfg Part:	EPDM-200

LSH-P903

Switch, Level, Mech Float, Narrow Angle, N.O., Blue	Part:	M1343
Tilt Float Level Switch w 40' cable	Qty:	1
25deg 13 amp NO, Blue	Mfg:	Warrick Controls
	Mfg Part:	PB20W4000

LSHH-0901

Switch, Level, Mech Float, Narrow Angle, N.C., YEL	Part:	19279
Tilt Float Level Switch w 40' cable	Qty:	1
N/C, Yellow float	Mfg:	Warrick Controls
	Mfg Part:	PY2CW4000

LSHH-0903

Switch, Level, Mech Float, Narrow Angle, N.C., YEL	Part:	19279
Tilt Float Level Switch w 40' cable	Qty:	1
N/C, Yellow float	Mfg:	Warrick Controls
	Mfg Part:	PY2CW4000

LSL-0902

Switch, Level, Mech Float, Narrow Angle, N.O., Blue	Part:	M1343
Tilt Float Level Switch w 40' cable	Qty:	1
25deg 13 amp NO, Blue	Mfg:	Warrick Controls
	Mfg Part:	PB20W4000

LSLL-0902

Switch, Level, Mech Float, Narrow Angle, N.O., Blue	Part:	M1343
Tilt Float Level Switch w 40' cable	Qty:	1
25deg 13 amp NO, Blue	Mfg:	Warrick Controls
	Mfg Part:	PB20W4000

M-0902

Mixer, Misc.	Part:	24628
See Extended Description	Qty:	1
	Mfg:	
Delta PG-2	Mfg Part:	
Horsepower = 1/2 hp		
Voltage = 575V/3P/60Hz		
Impeller = 8" SS PropellerShaft = 48" x 3/4" SS ShaftMount =Clamp Cup Mount		

Mixer

Fabrication, Misc as per specifications	Part:	10342
	Qty:	1
	Mfg:	
Mixer Support Stand Fabrication as per newterra supplied drawing.	Mfg Part:	

P-0901

Pump, Progressive Cavity, Moyno, 33301	Part:	M1255
7gpm@25psi, 1800rpm, NPSH:less than 5 feet	Qty:	1
	Mfg:	Moyno
	Mfg Part:	33301

P-0901

Coupling, Insert, L075N	Part:	11105
	Qty:	1
	Mfg:	Browning
None	Mfg Part:	00516344
Coupling, Motor, L075 x 7/8"	Part:	12027
1	Qty:	1
	Mfg:	Browning
None	Mfg Part:	00515671
Coupling, Pump, L075 x 5/8"	Part:	12028
	Qty:	1
	Mfg:	
None	Mfg Part:	00515652
Pump, Guard, Moyno	Part:	15856
33301 or 34401	Qty:	1
	Mfg:	Maple Leaf Environmental Equipment
None	Mfg Part:	
Pump, Progressive Cavity, Moyno, 33301 Assembly	Part:	16776
7gpm @ 25psig, 1800/1200 rpm, TEFC CL1 DIV2/XPF	Qty:	1
	Mfg:	Moyno
-	Mfg Part:	-
Motor, Teco, 1hp, 1800rpm, 143T	Part:	18820
575V, 3ph, CSA	Qty:	1
TEFC CL 1 DIV 2	Mfg:	
---	Mfg Part:	PDH00104TE5
Pump, Base, Moyno, 300 Series	Part:	22747
	Qty:	1
	Mfg:	
None	Mfg Part:	

P-0902

Pump, Grundfos, Misc	Part:	21485
See Description	Qty:	1
	Mfg:	
DDA 60-10 AR-PV/E/C-F-32A7A7BG 60lpm 110V PVDF with spring valves	Mfg Part:	---
Pump, Metering, Parts, Grundfos Input Signal Control Cable	Part:	36983
4-20mA, Pulse, Start/Stop	Qty:	1
Models: DDA,DDC,DDE-P,DDI,DMX/DMH-AR	Mfg:	
---	Mfg Part:	96609016

P-0903

Pump, Sump, Zoeller M53 Automatic Operation 110/115V 20' max head 40gpm max 9' standard length cord ---	Part: Qty: Mfg: Mfg Part:	17138 1 Zoller Pump Co. M53

PI-0901

Gauge, Pressure, 0-60psi, Indumart, P16T2-FG-60 SS, brass internals, Glyc. Filled, bottom mount	Part: Qty: Mfg: Mfg Part:	16203 1 Indumart P16T2-FG-60

PI-0902

Gauge, Pressure, 0-60psi, Indumart, P16T2-FG-60 SS, brass internals, Glyc. Filled, bottom mount	Part: Qty: Mfg: Mfg Part:	16203 1 Indumart P16T2-FG-60

PI-0903

Gauge, Pressure, 0-15psi, Indumart, P22T2-FG-15 SS, SS internals, Glyc. Filled, bottom mount	Part: Qty: Mfg: Mfg Part:	20172 1 Indumart P22T2-FG-15

Pipe

Tee, Galv, 2" None	Part: Qty: Mfg: Mfg Part:	10136 2 MGT-20
Reducer, Bushing, Galv, 1" x 3/4" Hex ---	Part: Qty: Mfg: Mfg Part:	10146 1 CIGB-1006
Elbow, 90deg, Galv, 1" None	Part: Qty: Mfg: Mfg Part:	10290 1 MGE90-10
Flexible Coupling, 6" x 4" MR56 64 ---	Part: Qty: Mfg: Mfg Part:	10398 1 MR56 64
Camlock Fitting, Aluminum, 2", Part "C" Female Adapter x Hose Shank Cam Lock Fitting None	Part: Qty: Mfg: Mfg Part:	10502 2 Bayco Industries 10.026025
Tee, PVC 80, 1/2", SxSxS, 801-005 ---	Part: Qty: Mfg: Mfg Part:	10730 2 801-005
Elbow, 45deg, PVC 80, 4", SxS, 817-040G ---	Part: Qty: Mfg: Mfg Part:	11060 1 817-040

Reducer, Bushing, PVC 80, 1-1/2" x 1", SxS, 837-211G	Part:	11336
	Qty:	1
	Mfg:	
---	Mfg Part:	837-211
Pipe, PVC 80, 1/2"	Part:	11447
80-005	Qty:	10
	Mfg:	
---	Mfg Part:	80-005 Cut in 10ft
Elbow, 90deg, PVC 40, 1/2", SxS, 406-005G	Part:	12443
	Qty:	5
	Mfg:	
---	Mfg Part:	406-005G
Nipple, SS, 2" x Close	Part:	16602
2"x2"	Qty:	1
	Mfg:	
---	Mfg Part:	304LN402000C
Reinforced, Adapter, PVC 80, Female, 1-1/2", FNPTxS	Part:	17053
Fitting, transition, socket x FNPT SS	Qty:	2
	Mfg:	spears
---	Mfg Part:	835-015SR
Reinforced, Adapter, PVC 80, Female, 2", FNPTxS	Part:	17054
Fitting, transition, socket x Fipt SS	Qty:	4
	Mfg:	
---	Mfg Part:	835-020SR
Pump, Piping, Progressive Cavity, 2" x 1-1/2", 30gpm	Part:	17318
	Qty:	1
	Mfg:	Maple Leaf Environmental Equipment
-	Mfg Part:	-
Reinforced, Adapter, PVC 80, Female, 1/2", FNPTxS	Part:	19056
Fitting, transition, socket x SS	Qty:	6
	Mfg:	
---	Mfg Part:	835-005SR
Tee, Brass, 1/2"	Part:	19098
BFD-04	Qty:	4
	Mfg:	
---	Mfg Part:	BFD-04
Nipple, Brass, 1/2" x Close	Part:	19100
112-D	Qty:	8
	Mfg:	
---	Mfg Part:	12.100112020
Reducer, Bushing, Brass, 1/2" x 1/4"	Part:	19194
Hex	Qty:	4
	Mfg:	
---	Mfg Part:	110-db
Reducer, Bushing, PVC 80, 1" x 3/4", SxF, 838-131	Part:	19448
	Qty:	2
	Mfg:	Alfa Plastics
---	Mfg Part:	838-131

Reducer, Bushing, PVC 80, 1-1/2" x 1/2", SxF, 838-209	Part:	20024
	Qty:	2
	Mfg:	
---	Mfg Part:	838-209
Reducer, Coupling, Brass, 3/4" x 1/2", FxF NPT	Part:	21681
	Qty:	2
	Mfg:	
---	Mfg Part:	BFCR-0604
Adapter, 3/4" MNPT to 3/4" MGHT, Brass	Part:	28256
MNPT x Garden Hose	Qty:	1
	Mfg:	
---	Mfg Part:	12.101501020
Pump, Metering, Parts, ProMinent, Injection Valve	Part:	36408
1/2" MNPT, PVDF/PTFE, Sigma	Qty:	1
7803724	Mfg:	
---	Mfg Part:	7803724
Camlock Fitting, Aluminum, 2", Part "F"	Part:	M1272
Male Adapter x Male Thread Cam Lock Fitting	Qty:	2
	Mfg:	Bayco Industries
-	Mfg Part:	10.026065
Union, PVC 80, 1-1/2", Soc, 8057-015	Part:	P1006
viton o-ring seal	Qty:	2
	Mfg:	
---	Mfg Part:	8057-015
Elbow, 90deg, PVC 80, 1-1/2", SxS, 806-015G	Part:	P1007
	Qty:	4
	Mfg:	
---	Mfg Part:	806-015
Reducer, Bushing, Galv, 2" x 1"	Part:	P1020
Hex	Qty:	4
	Mfg:	
None	Mfg Part:	CIGB-2010
Union, Galv, 1", 150#	Part:	P1059
	Qty:	2
	Mfg:	
None	Mfg Part:	MGU150-10
Nipple, KC, Plated, 2"	Part:	P1077
	Qty:	2
	Mfg:	
None	Mfg Part:	10.0455244
Union, PVC 80, 2", soc, 857-020	Part:	P1080
	Qty:	2
	Mfg:	
---	Mfg Part:	8057-020
Elbow, 90deg, PVC 80, 4", SxS, 806-040G	Part:	P1125
	Qty:	4
	Mfg:	
---	Mfg Part:	806-040

Coupling, PVC 80, 2", SxS, 829-020G	Part:	P1145
	Qty:	2
	Mfg:	
---	Mfg Part:	829-020
Coupling, PVC 80, 1", SxS, 829-010G	Part:	P1154
	Qty:	4
	Mfg:	
---	Mfg Part:	829-010
Tee, PVC 80, 2", SxSxS, 801-020G	Part:	P1156
	Qty:	2
	Mfg:	
---	Mfg Part:	801-020
Elbow, 90deg, PVC 80, 2", SxF, 807-020	Part:	P1159
	Qty:	5
	Mfg:	
---	Mfg Part:	807-020
Tee, PVC 80, 1-1/2", SxSxS, 801-015G	Part:	P1172
	Qty:	2
	Mfg:	
---	Mfg Part:	801-015
Coupling, PVC 80, 1-1/2", SxS, 829-015G	Part:	P1175
	Qty:	2
	Mfg:	
---	Mfg Part:	829-015
Flexible Coupling, 6" x 6"	Part:	P1188
	Qty:	1
	Mfg:	
---	Mfg Part:	1056-66
Pipe, PVC 80, 2"	Part:	P1190
80-020	Qty:	20
	Mfg:	
---	Mfg Part:	80-020 Cut in 10ft
Pipe, PVC 80, 4"	Part:	P1191
80-040	Qty:	20
	Mfg:	
---	Mfg Part:	80-040 Cut in 10ft
Flexible Coupling, 4" x 4"	Part:	P1202
	Qty:	2
	Mfg:	
---	Mfg Part:	1056-44
Reducer, Bushing, PVC 80, 2" x 1/2", SxF, 838-247G	Part:	P1203
	Qty:	2
	Mfg:	
---	Mfg Part:	838-247G
Pipe, PVC 80, 1-1/2"	Part:	P1211
80-015	Qty:	10
	Mfg:	
---	Mfg Part:	80-015 Cut in 10ft

Valve, Relief, Back Pressure, Kunkle, 1", Liquid Service Bronze, Teflon O-Ring, Handwheel adjustment Set @ 50 PSI, 0019-E01-MG0050	Part: Qty: Mfg: Mfg Part:	21299 1 Kunkle 0019-E01-MG005

PSL-7911

Meter, Flow, Pitot Tube, 4" -	Part: Qty: Mfg: Mfg Part:	17333 1 Maple Leaf Environmental Equipment -
Hose Barb, Brass, 1/4" x 1/8", Male None	Part: Qty: Mfg: Mfg Part:	19425 2 125-4A
Tubing, High-Pressure Black Buna-N Rubber, 3/8OD 1/4" ID, 3/8" OD, 1/16" Wall Thickness Braided tube, -20 to 200 degF, 250PSI@72° F None	Part: Qty: Mfg: Mfg Part:	19765 4 5394K16

SLD-0901

Volute, Dewatering Press, MYDL-131 Complete without Control Panel All Components Must be UL / CSA Not including control panel Inlet SS:1%-5% DS:10-14kg/h Material:SS304 Gearmotor:SEW, including UL CSA 575V 3P 60hz Solenoid 12V DC	Part: Qty: Mfg: Mfg Part:	40616 1 MYDL-131

SP-0901

Valve, Ball, Brass, 1/2", 150# NPT, Teflon seats, 600 PSI WOG	Part: Qty: Mfg: Mfg Part:	10538 1 601-1/2

Stand

Fabrication as per drawing Volute Stand Fabricated as per newterra drawing: Volute Stand, 1905884, B01	Part: Qty: Mfg: Mfg Part:	42892 1

TNK-0902

Tank, Misc Plastic Norwesco P/N 62343Cone Bottom Tank with StandCapacity: 300 GallonDiameter: 49"Height: 61" Including StandFill Opening: 16"Drain: 2"	Part: Qty: Mfg: Mfg Part:	21656 1 41399

TNK-0903

Tank, Misc Plastic	Part:	21656
	Qty:	1
	Mfg:	
High Density Linear Polyethylene Open Top Rectangular Tank 165 US Gallon (625 Ltr.) Capacity Dimensions: 46"L x 29"W x 29"High	Mfg Part:	RT-135

V-0901

Valve, Ball, PVC, 1/2", True-Union, FPM O-rings	Part:	37665
SOC + FNPT ends included	Qty:	1
Afflu-O, NSF61	Mfg:	
	Mfg Part:	K15-005VC

V-0902

Valve, Ball, PVC, 1/2", True-Union, FPM O-rings	Part:	37665
SOC + FNPT ends included	Qty:	1
Afflu-O, NSF61	Mfg:	
	Mfg Part:	K15-005VC

V-0903

Valve, Ball, PVC, 1/2", True-Union, FPM O-rings	Part:	37665
SOC + FNPT ends included	Qty:	1
Afflu-O, NSF61	Mfg:	
	Mfg Part:	K15-005VC

V-0904

Valve, Ball, PVC, 1/2", True-Union, FPM O-rings	Part:	37665
SOC + FNPT ends included	Qty:	1
Afflu-O, NSF61	Mfg:	
	Mfg Part:	K15-005VC

V-0907

Valve, Ball, PVC, 1-1/2", True-Union, FPM O-rings	Part:	37661
SOC ends included	Qty:	1
Afflu-O, NSF61	Mfg:	
	Mfg Part:	K15-015VS

V-0908

Valve, Check, Swing, PVC, 1-1/2", Clear, 1520-15C	Part:	13313
	Qty:	1
	Mfg:	
	Mfg Part:	S152015C

V-0909

Valve, Ball, PVC, 1-1/2", True-Union, FPM O-rings	Part:	37661
SOC ends included	Qty:	1
Afflu-O, NSF61	Mfg:	
	Mfg Part:	K15-015VS

V-0910

Valve, Ball, PVC, 1-1/2", True-Union, FPM O-rings	Part:	37661
SOC ends included	Qty:	1
Afflu-O, NSF61	Mfg:	
	Mfg Part:	K15-015VS

V-0911

Valve, Check, Swing, PVC, 2", Clear, 1520-20C	Part:	12868
	Qty:	1
	Mfg:	
	Mfg Part:	S1520C20

V-0912

Valve, Ball, PVC, 2", True-Union, FPM O-rings	Part:	37662
SOC ends included	Qty:	1
Afflu-O, NSF61	Mfg:	
	Mfg Part:	K15-020VS

newterra ltd.
1291 California Avenue, Brockville, ON K6V 5W3
(800) 420-4056 / www.newterra.com

APPENDIX B

Packing Slip

© 2019 by **newterra**, ltd.
All rights reserved. No part of this document may be reproduced or transmitted in any form or by any means, electronic, mechanical, photocopying, recording, or otherwise, without prior written permission of **newterra** ltd.

Project Packing List

PMProjNum **1905884**

Agnico Eagle Volute

Shipping Notes:

Tag	Part Number	Part Description	Req Rec PO #	EngMemo Line
7900	39629	Eye Wash Station, w/ Shower, safety H-545	1	---
-	ea	Constant 15 min flow, Includes: Eyewash & S	1	
	Type: P	Portable, Pressurized SS Tank, Twin Spray *Use with water preservative	1905884-0012	3
7900	23989	Hood, Louver, LOUVER-12, Fits 12" Louver	1	-
7901	ea		1	
	Type: P	None	1905884-0025	1
7900	15512	Container, 8' x 40' x 9'6" High Cube	1	---
7901	ea	Premium Quality Used	1	
	Type: P	newterra Tier #2 Container ---	1905884-0010	2
9090	23451	Hose, Suction, EPDM, Green, 2"	6	Added by production team
	ft	Green Helix, 65psi -40 to 160F temp	6	
	Type: I	Hose, Suction, EPDM, Green, 2"	1905884-9999	###
12900	41784	Hopper, Dumping, Steel, Uline, H-6755	1	---
Hopper	ea	1 Cubic Yard, 4000 lbs capacity, 61"Lx42"Wx	1	
	Type: P	All-welded steel construction.Simply pull cable from the seat of your forklift to release hopper.Safety chain secures hopper to forklift.	1905884-0012	1

newterra ltd.
1291 California Avenue, Brockville, ON K6V 5Y6
(800) 420-4056 / www.newterra.com

APPENDIX C

Commissioning Checklists

© 2019 by **newterra**, ltd.
All rights reserved. No part of this document may be reproduced or transmitted in any form or by any means, electronic, mechanical, photocopying, recording, or otherwise, without prior written permission of **newterra** ltd.

1805884 - AGNICO EAGLE VOLUTE - INSTALLATION INSTRUCTION

This purpose of this report is to detail the installation of the system to ensure that it will operate as originally designed. This is then documented so it can be referenced later, if needed.

The following instructions must be completed by the startup technician on site before pre-commissioning and commissioning of the system can occur. These are the last quality checks ensuring the process equipment is ready for continuous operation.

newterra highly recommends that the system is started by a factory trained startup technician to ensure the long term success of your project. We understand that this may not always be feasible in which case we would require a highly skilled technician capable of troubleshooting both mechanical and electrical aspects of a process treatment system and be familiar with our manual, equipment and capable of training the operator on operating and maintenance requirements of the treatment system.

This checklist must be sent back to **newterra** Service Department to validate your equipment warranty which begins on the date of shipment from the factory. It can be sent back in one of the following methods:

E-mail service@newterra.com
Fax: Att: Service Department
613-345-7633

If you choose to fax the document then, please follow up with an email explaining that a fax was sent so we can ensure that we received the fax and properly validate the equipment warranty.

Names of newterra Technician(s)

ITEM	INSTALLATION CHECKLIST	INITIAL/ DATE
	CONTAINER PLACEMENT	

1	In accordance with the ordered Quote, the following are within the customer's scope of supply for Installation
	
	• Installation of loose shipped equipment supplied by **newterra**
	• Placement and anchoring (if required) of equipment
	• Interconnecting piping supply and installation
	• Interconnecting electrical and controls supply and installation including connection inside **newterra**'s control panel
	• Electrical power supply to our electrical panel, lightning, grounding, etc.
	• Permitting
	• Potable water supply to the plant site for plant hydraulic test during startup
	• Seed sludge
	• Wastewater testing
	• Chemicals supply and storage
	  o NOTE: Based on local regulations, additional safety equipment may be required to store and handle chemicals on the site which have not been included as part of this proposal. This may include but be limited to: eye wash stations, safety showers, spill containment, secondary containment, isolation curtains, isolated ventilated bulk storage buildings, personal protective equipment, constant ventilation systems, vapor suppression equipment, and spill containment equipment. newterra can provide pricing for these options upon request.
	• Treated effluent and waste sludge disposal
	• All civil work including design
	  o Tank sizing as per **newterra** supplied PFD, to be confirmed during detailed design	

2	Complete newterra Job Site Safety Inspection, Analysis & Briefings – Attached at **TAB A**.	
3	Complete newterra Field Services Jobsite Inspection Checklist – Attached at **TAB B**.	
4	Confirm with the newterra Project Manager that the container has arrived on site via email.	
5	Complete an exterior visual inspection of the container while still on the truck. **Record all dents, marks or holes in the systems that may have been caused during transportation. Take pictures and email to the newterra Project Manager.	
6	Verify that pad or base is clean, firm and level. If the pad or base is not level or firm, report (call and/or email) to the newterra Project Manager for further instructions. Take pictures and email to the newterra Project Manager.	

ITEM	INSTALLATION CHECKLIST	INITIAL/ DATE
7	Prior to lifting the container - confirm that the appropriate safety briefings and documentation have been conducted. Confirm that an appropriate sized crane/forklift is available and ready for skid placement and piping component/spools movement/placement.	
8	Remove shipping material from the container.	
9	Place the container on site noting the inlet/outlet/power external connections – see layout drawing at **Appendix A in O&M Manual** Take pictures of container placement and email to the newterra Project Manager.	
10	Complete a secondary visual inspection of the container once it has been placed on the pad/base. **Record all dents, marks or holes in the systems that may have been caused during craning or setting of system. Take pictures and email them to the newterra Project Manager.	
11	Confirm the packing list items. See **Appendix B in O&M Manual.** Take pictures of any internal damaged items and Packing List items. Detail deficiencies in **Punch List – Attached at TAB C** and email newterra Project Manager.	
12	Verify that all TAGGED system components are in the system. **See attached TAG List** – **TAB D** only sign off/initial the verified column. See **Appendix A in O&M Manual** for System P&ID Drawings. Detail deficiencies in **Punch List – Attached – TAB C**.	

ITEM	INSTALLATION CHECKLIST	INITIAL/ DATE
	CIVIL INSTALLATION	
13	Remove hatch covers from the interconnecting ports.	
14	Install 3 loose provided doors on the container. Qty 2 on the end of the container (see below) Qty 1 on the container side (see below) 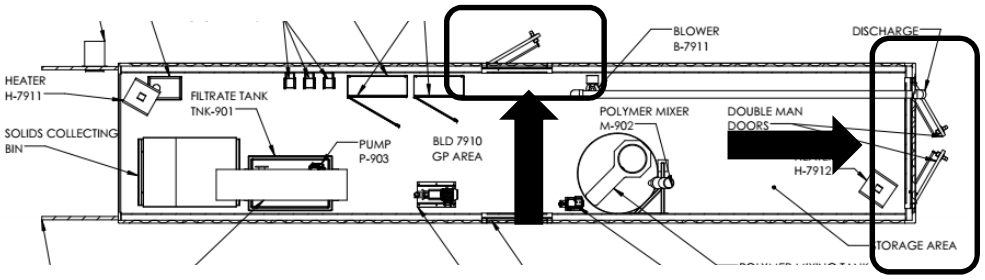	
15	Confirm that all doors are closing, latching and locking	
16	Confirm Weather stripping has been installed around each door	
17	Install Door sweeps on each door	
18	Install and seal louvre hood on the container barn doors 	

ITEM	INSTALLATION CHECKLIST	INITIAL/ DATE
19	Install the volute on its stand. • **NOTE** - The volute stand is strapped to the wall. • Remove strap and place volute on the stand. • Position the volute and stand close to the wall. • Ensure necessary spacing from VFDs and Panels as well as there is enough room to place the sludge cake collection bin behind the volute with the container barn doors closed. • The volute chute must be facing the container barn doors. • Secure the stand to the floor. • Place tank TNK-0903 under the volute stand. 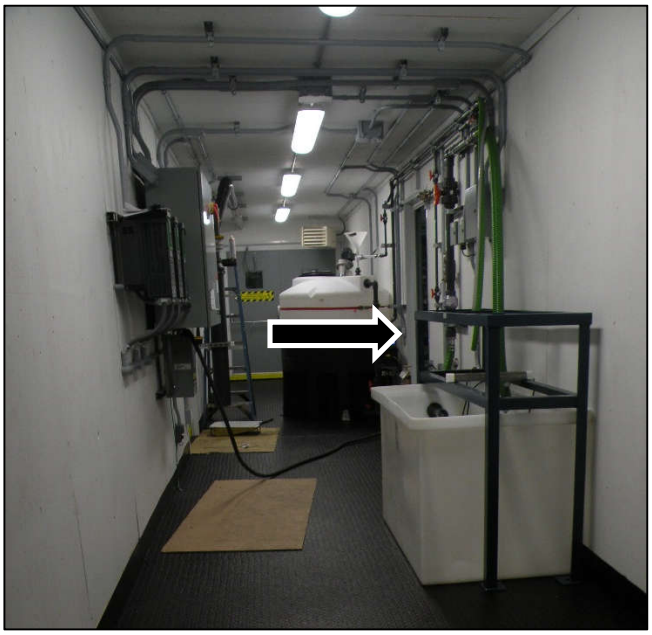 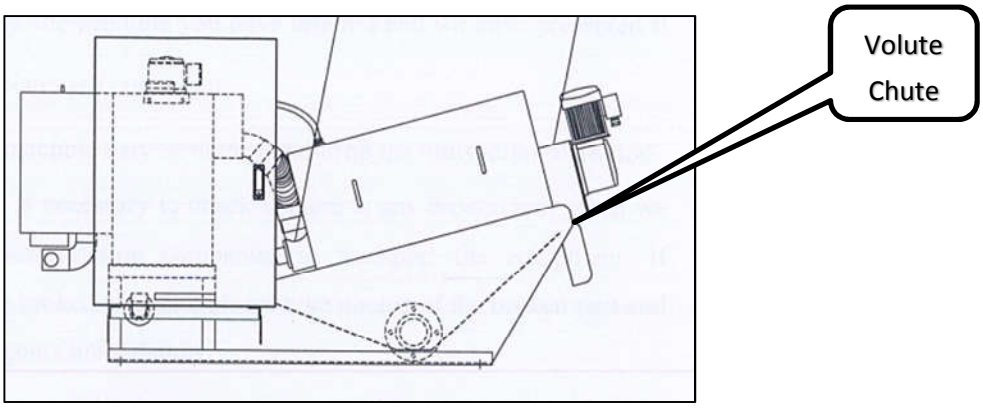	
20	Confirm that all customer external access stairs, walkways, walk thrus, skirting, etc. have been installed. Advise newterra Project Manager of any issues. Record on Punch List – attached – **TAB C**.	
21	Install customer container roof sealing and internal walkway sealing between the newterra system and the existing WWTP.	

ITEM	INSTALLATION CHECKLIST	INITIAL/ DATE
22	Install PVC blower vent on exterior of the container	

ITEM	INSTALLATION CHECKLIST	INITIAL/ DATE
	MECHANICAL INSTALLATION	
22	Inspect all mechanical equipment for damage. Detail deficiencies in **Punch List – Attached – TAB C.**	
23	Connect container sump to customer piping – see **P&ID at Appendix A** in the O&M Manual	
24	Connect potable water piping to backflow preventer (located to the left of the walk way. 	
25	Until the system has been commissioned, connect the system inlet to the outlet. 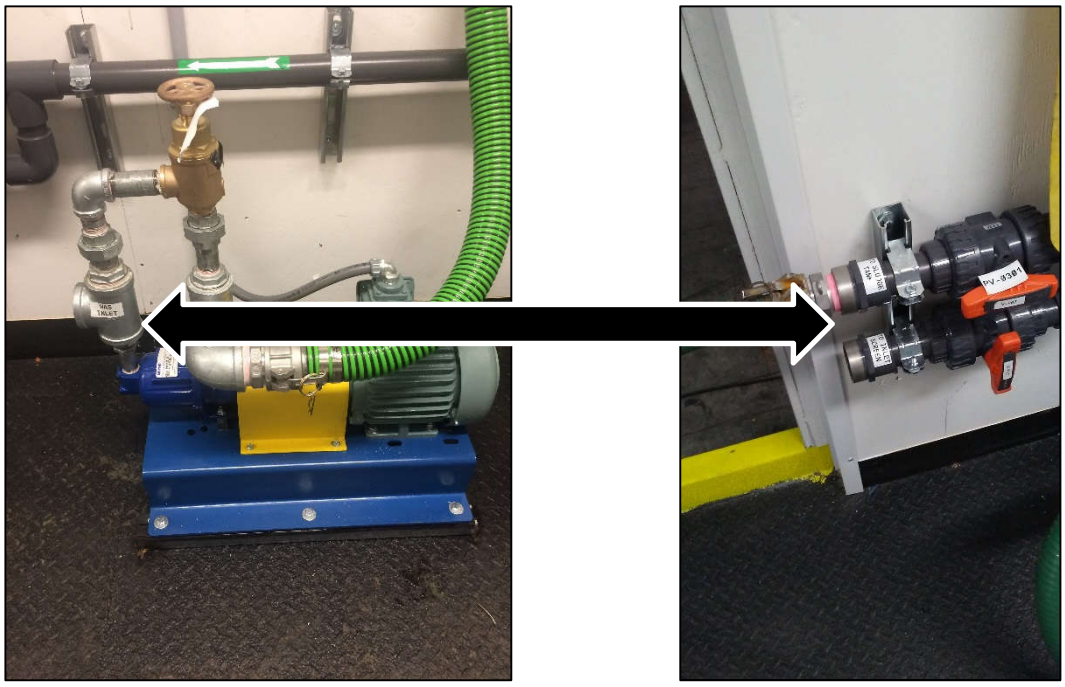	

ITEM	INSTALLATION CHECKLIST	INITIAL/ DATE
26	Connect the Polymer Dosing line (labelled TO FLOCCULATION TANK) to the Volute (see below). Connect the WAS INLET line (labelled TO INLET FLOCCULATION TANK) to the Volute Inlet (see below). Connect the Potable Water line (labelled TO SV-0901) to the Volute SV-0901 (see below). 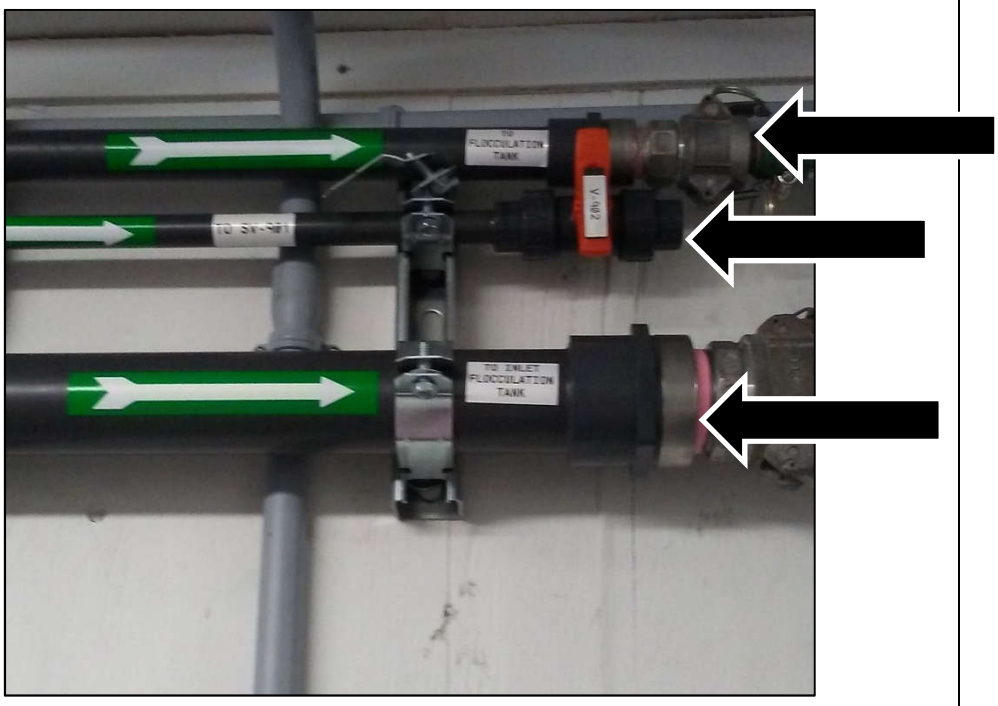 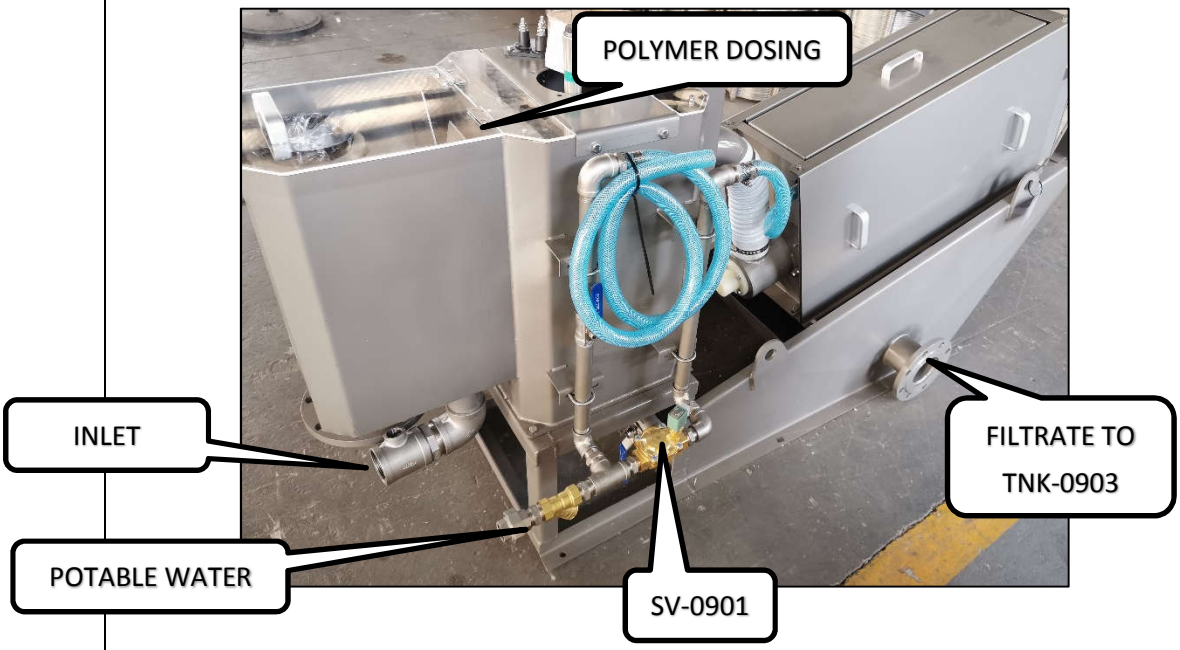	

ITEM	INSTALLATION CHECKLIST	INITIAL/ DATE
27	Confirm placement of P-0903 and LSHH-0903 in TNK-0903	
28	Confirm that all tanks (TNK-0903 and TNK-0902) are clean and free of debris. Clean as required.	
29	Ensure all unions and fittings are tight, as some are loosened to prevent stress in shipping	
30	Confirm placement of solids collections bin behind the Sludge Cake chute. Confirm that the container barn doors can be closed. Correct as required.	

<table>
<tr><th>ITEM</th><th>INSTALLATION CHECKLIST</th><th>INITIAL/ DATE</th></tr>
<tr><td></td><td>ELECTRICAL INSTALLATION</td><td></td></tr>
<tr><td>31</td><td>Inspect all electrical equipment for damage. Detail deficiencies in Punch List – attached – TAB C.</td><td></td></tr>
<tr><td>32</td><td>Measure the Site voltage and email measurements to newterra project Manager.

L1/L2:

L2/L3:

L3/L1:

L1/GRD:

L2/GRD:

L3/GRD:</td><td></td></tr>
<tr><td>33</td><td>Verify the system power requirements on site as per system design. See below.

<table>
<tr><th colspan="2">ELECTRICAL SPECIFICATIONS</th></tr>
<tr><td>VOLTAGE</td><td>600VY 3 WIRE</td></tr>
<tr><td>PHASE</td><td>3</td></tr>
<tr><td>FREQUENCY</td><td>60Hz</td></tr>
<tr><td>FULL LOAD AMPS</td><td>31</td></tr>
<tr><td>MAIN DISCONNECT SIZE</td><td>60</td></tr>
<tr><td>MAIN OVERCURRENT PROTECTION RATING</td><td>40</td></tr>
<tr><td>SCCR SYMMETRICAL (kAMPS)</td><td>65</td></tr>
<tr><td>SYSTEM APPROVAL AND CLASSIFICATION</td><td>cMETus GP</td></tr>
<tr><td>PANEL APPROVAL AND CLASSIFICATION</td><td>cMET GP TO C22.2 NO.14</td></tr>
<tr><td>ELECTRICAL INSTALL SPECIFICATIONS</td><td>PVC</td></tr>
<tr><td>WIRE SPECIFICATIONS</td><td>WIRE TO CANADIAN STANDARDS</td></tr>
</table>
</td><td></td></tr>
<tr><td>34</td><td>Check Control and Power Panels for any loose wiring. Correct as required.</td><td></td></tr>
</table>

ITEM	INSTALLATION CHECKLIST	INITIAL/ DATE
35	Connect High Voltage wiring to Volute from JB-VOLUTE HV (located by Volute) Motors on SP-0901 & M-0901 Fans on SP-0901 & M-0901 See **Electrical Drawings at Appendix A** to the O&M Manual	

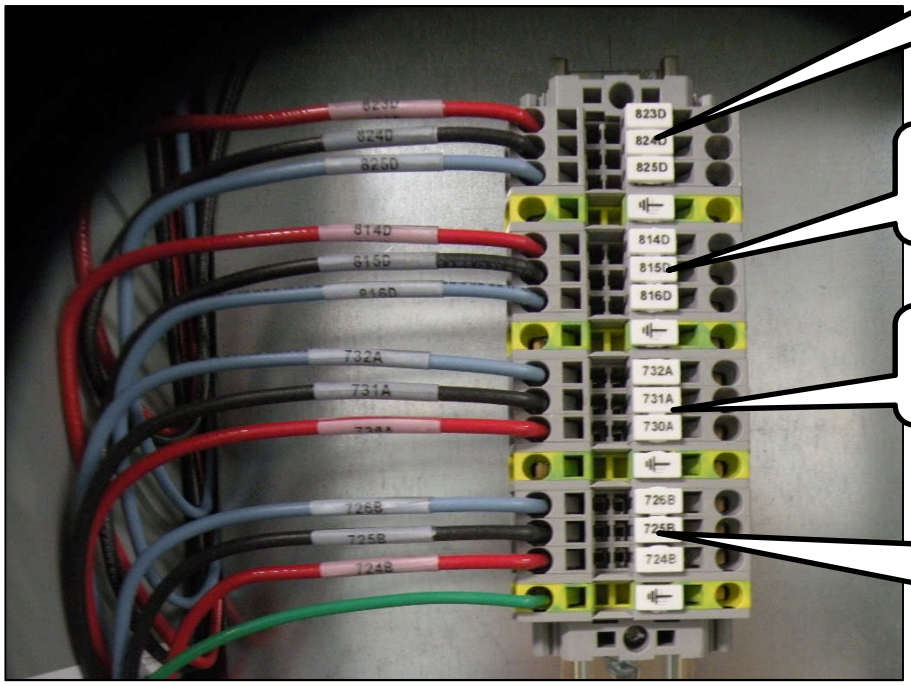

823D, 823D & 823D to SP-0901 Motor on Volute

814D, 815D & 816D to M-0901 Motor on Volute

730A, 731A & 732A to SP-0901 Fan on Volute

724B, 725B & 726B to M-0901 Fan on Volute

ITEM	INSTALLATION CHECKLIST	INITIAL/ DATE
36	Connect LSHH-0901 on the volute to JB-VOLUTE-DC (located by the Volute) Confirm that LSHH-0903 is correctly wired to JB-VOLUTE-DC 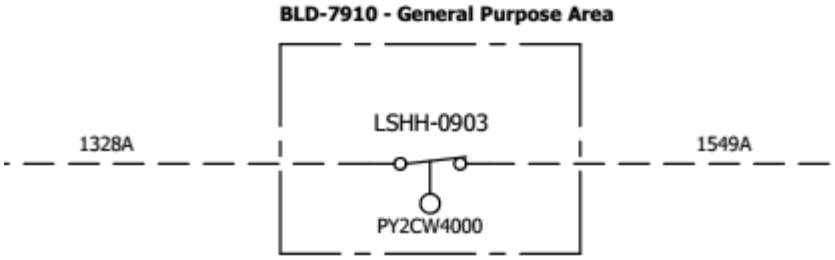 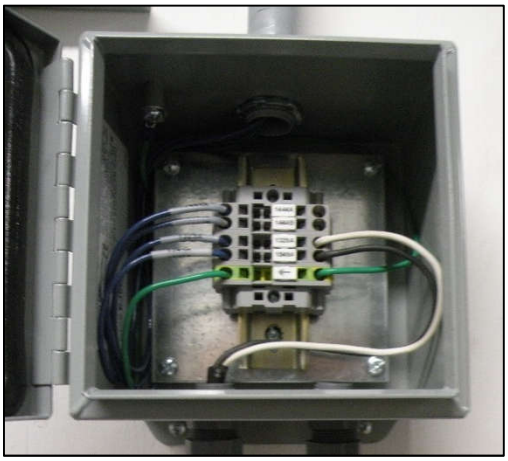	
37	Confirm that all internal electrical connections have been terminated.	
38	Connect electrical power to the Main Disconnect from available source ensuring correct phase rotation (See Electrical Drawings at **Appendix A in the O&M Manual** for power source specifications).	
39	Connect electrical power to the Control Panel (See System Layout drawing at **Appendix A in the O&M Manual** for location).	
40	Ensure that proper electrical grounding and lightning protection is available. Connect ground wire between containers.	
41	Switch Main Switch Panel's isolator to the ON position.	

ITEM	INSTALLATION CHECKLIST	INITIAL/ DATE
42	Check all internal lighting correct operation.	
43	Confirm Phase Monitor is not in alarm	
44	Set the Motor overloads for M-0901 (VFD1620A) and SP-0901 (VFD0629A) VFDs based on the Volute motors nameplates. Nom Motor Current and Motor Th Current settings on the VFD 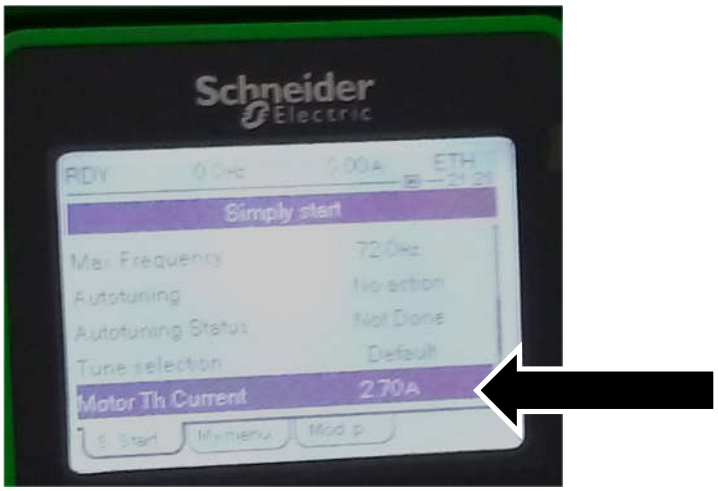 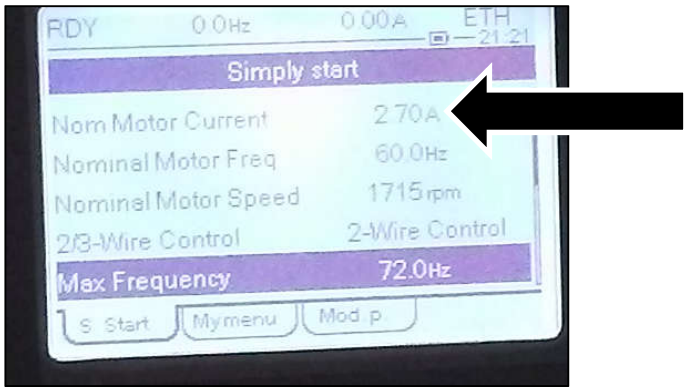 There is a note on the MPP 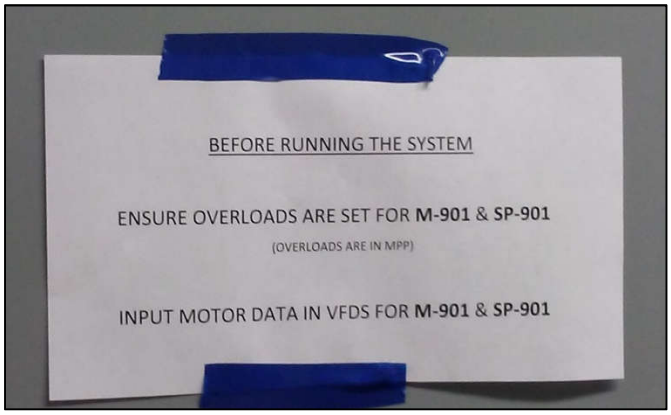 	

ITEM	INSTALLATION CHECKLIST	INITIAL/ DATE
45	Installation is now complete. Email newterra Project Manager with a scanned signed copy (by authorized customer rep is available) of the Installation instruction and any additional pictures/Punch List.	

I hereby confirm that the newterra system has been:

- Successfully installed in accordance with the Installation Instruction
- Any Punch List Items have been recorded as well as sent to the newterra Project Manager.

Customer Rep

Name: _____

Signed: _____

Date: _____

newterra Tech

Name: _____

Signed: _____

Date: _____

1805884 - AGNICO EAGLE VOLUTE - PRE-COMMISSIONING INSTRUCTION

This purpose of this report is to test the functionality of electrical, control and mechanical components to ensure the system operates as originally designed. This testing is then documented so it can be referenced later if needed.

The Pre-Commissioning Instruction must be completed by the startup technician on site before Commissioning of the system can occur. This is one of the last quality check ensuring the process equipment is ready for continuous operation.

newterra highly recommends that the system is started by a factory trained startup technician to ensure the long term success of your project. We understand that this may not always be feasible in which case we would require a highly skilled technician capable of troubleshooting both mechanical and electrical aspects of a process treatment system and be familiar with our manual, equipment and capable of training the operator on operating and maintenance requirements of the treatment system.

This checklist must be sent back to **newterra** Service Department to validate your equipment warranty which begins on the date of shipment from the factory. It can be sent back in one of the following methods:

E-mail service@newterra.com
Fax: Att: Service Department
613-345-7633
If you choose to fax the document then, please follow up with an email explaining that a fax was sent so we can ensure that we received the fax and properly validate the equipment warranty.

Names of Startup Technicians

ITEM	PRE-COMMISSIONING CHECKLIST	INITIAL/DATE
	VERIFICATION	

1	In accordance with the ordered Quote, the following are within the customer's scope of supply.
	
	• Installation of loose shipped equipment supplied by **newterra**
	• Placement and anchoring (if required) of equipment
	• Interconnecting piping supply and installation
	• Interconnecting electrical and controls supply and installation including connection inside **newterra**'s control panel
	• Electrical power supply to our electrical panel, lightning, grounding, etc.
	• Permitting
	• Potable water supply to the plant site for plant hydraulic test during startup
	• Seed sludge
	• Wastewater testing
	• Chemicals supply and storage
	  o NOTE: Based on local regulations, additional safety equipment may be required to store and handle chemicals on the site which have not been included as part of this proposal. This may include but be limited to: eye wash stations, safety showers, spill containment, secondary containment, isolation curtains, isolated ventilated bulk storage buildings, personal protective equipment, constant ventilation systems, vapor suppression equipment, and spill containment equipment. newterra can provide pricing for these options upon request.
	• Treated effluent and waste sludge disposal
	• All civil work including design
	  o Tank sizing as per **newterra** supplied PFD, to be confirmed during detailed design	

2	Ensure availability of on-site emergency eyewash station and personal protection equipment. Complete the newterra Job Site Safety Inspection, Analysis and Briefing form – as applicable.	

ITEM	PRE-COMMISSIONING CHECKLIST	INITIAL/DATE
3	Startup the portable eye wash and shower station See instructions included with the station Add preservation included with the station as per instructions provided by the OEM 	
4	Confirm that the newterra Pre-Commissioning Checklist has been completed – See **TAB E.**	
5	For the Pre-Commissioning procedure, all tanks will be filled with potable water when directed to verify operations and equipment. Ensure that all tanks are clean and free of any dirt or debris (this is to prevent obstruction or damage to the piping, pumps, and membranes).	
6	Ensure that all unions, fittings and flanged connections are tight. Confirm that all manuals valves are in their P&ID position. See **P&ID at Appendix A** of this O&M Manual.	
7	Until the system has been commissioned, connect the system inlet to the outlet. 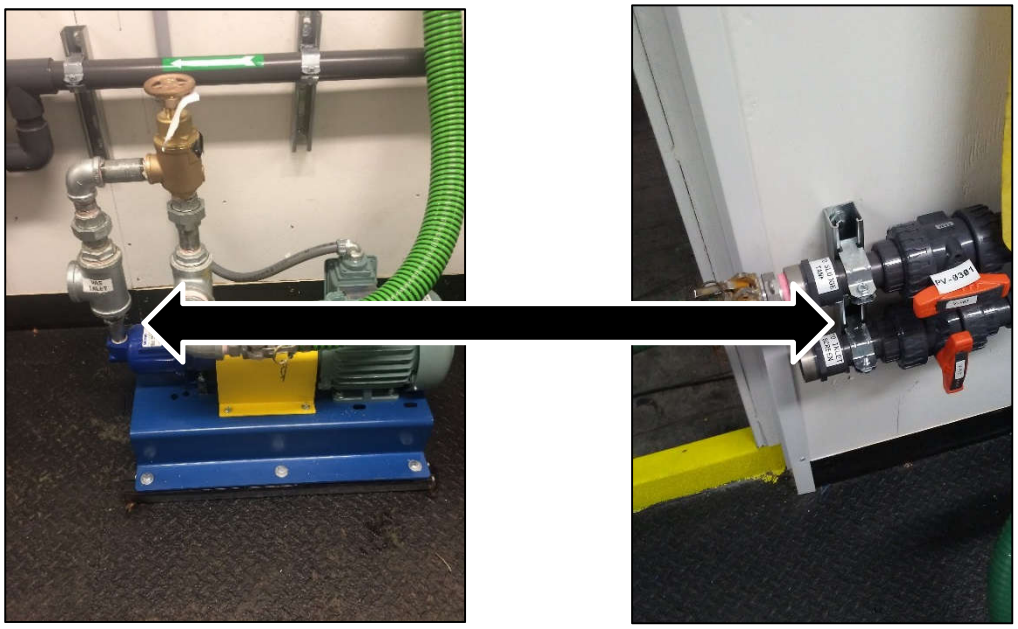	

ITEM	PRE-COMMISSIONING CHECKLIST	INITIAL/DATE
8	Confirm that the customers piping and electrical connections to the system are complete. See **P&ID and Electrical Drawings – Appendix A in O&M Manual.** For piping, confirm size and type of piping to/from newterra container – customer responsibility. Detail deficiencies in **Punch List – See attached – TAB C.**	
9	Confirm that all rotating equipment oiled and greased as per manufactured recommendations (pumps and blowers).	
10	As confirmation, verify building process flow and instrumentation matches P&ID drawing – see **Appendix A in the O&M Manual.** Detail deficiencies in **Punch List – See attached – TAB C.**	
11	If there has been a time lag between installation and pre-commissioning, then as confirmation, verify that all major components and instrumentation – See attached **TAG List – TAB D. Check off Verified column**. Detail deficiencies in **Punch List** – See attached – **TAB C.**	
12	Confirm that Polymer for commissioning is on site. If the Polymer is not on site, contact the newterra Project Manager for further instructions.	
13	Check Volute for any loos bolts and tighten as required.	
	HYDRAULIC TEST	
14	Turn on the Power on the system but **STOP** the process from the HMI	
15	**OPEN** V-0904 and fill TNK-0902 with water. Check for leaks and repair as required.	

ITEM	PRE-COMMISSIONING CHECKLIST	INITIAL/DATE
16	Select the **Sludge System** HMI menu item and turn **ON** M-0902 in **HAND** (touch M-0902 and then select **HAND**) and confirm operation. Confirm operation of the level switches. Record on the **TAG List – attached TAB D** – in the operational column. Record in deficiencies in the attached **Punch List – TAB C.**	
17	Select the **Sludge System** HMI menu item and turn **ON** P-0902 in **HAND** (touch P-0902 and then select **HAND**) and confirm operation.	

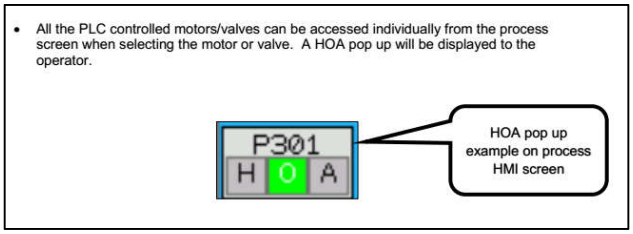

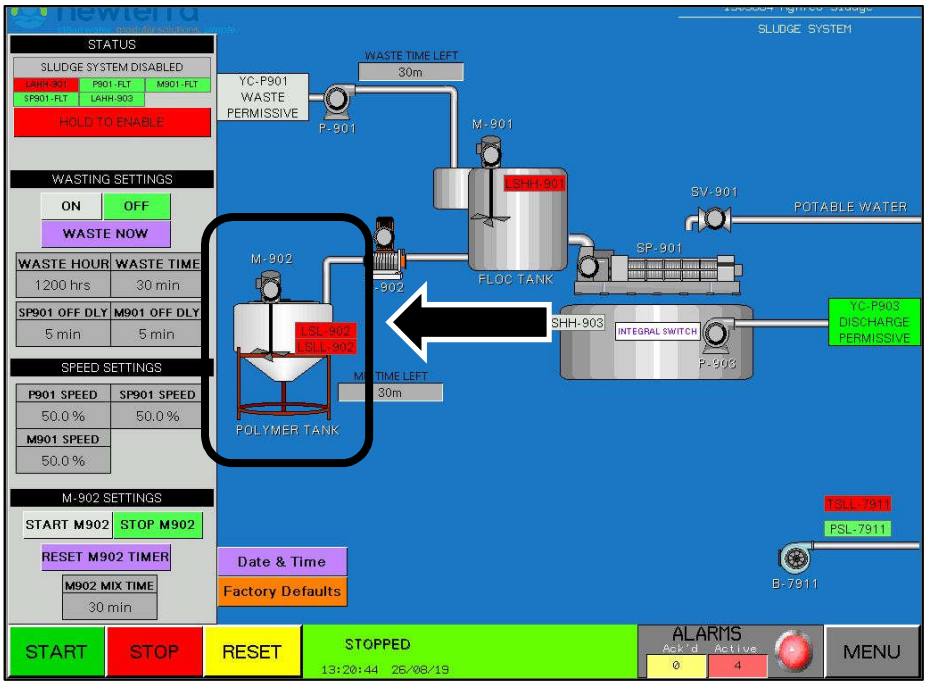

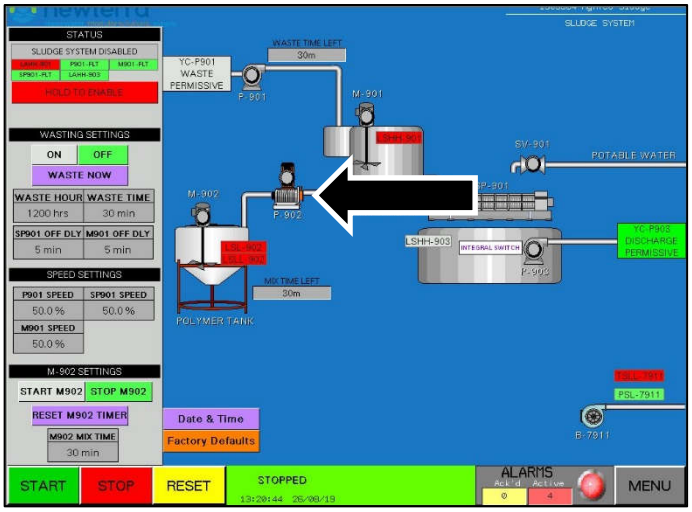

ITEM	PRE-COMMISSIONING CHECKLIST	INITIAL/DATE
18	Turn **ON** SV-0901 in **HAND** (touch SV-0901 and then select **HAND**) and confirm operation. Confirm operation of spray nozzles. Record on the **TAG List – attached TAB D** – in the operational column. Record in deficiencies in the attached **Punch List – TAB C.** Fill TNK-0903 with water 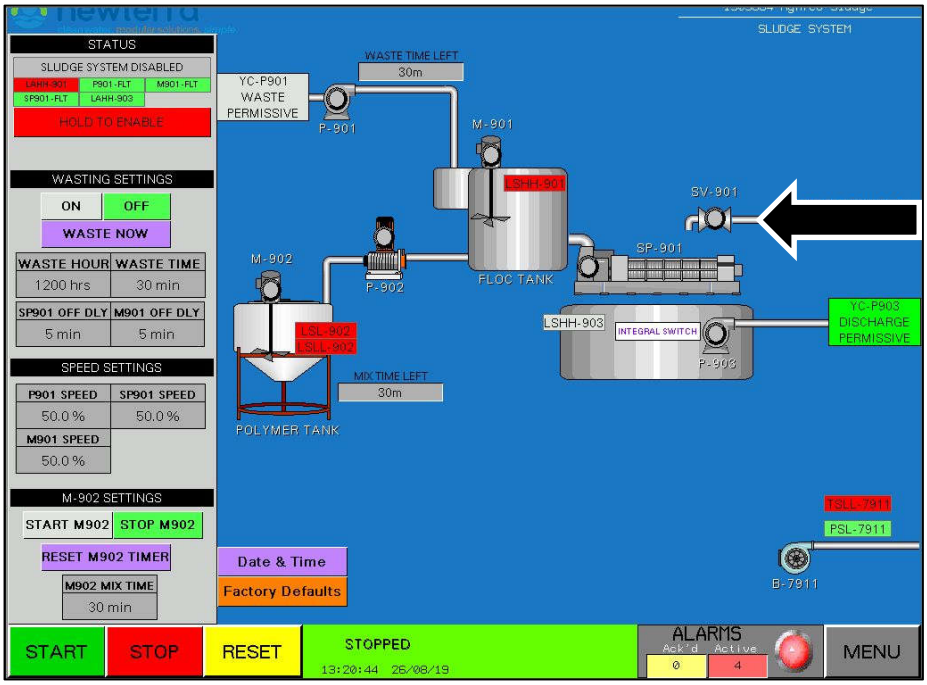	
19	Turn **ON** P-0903 in **HAND** (touch P-0903 and then select **HAND**) and confirm operation. Record on the **TAG List – attached TAB D** – in the operational column. Record in deficiencies in the attached **Punch List – TAB C.** 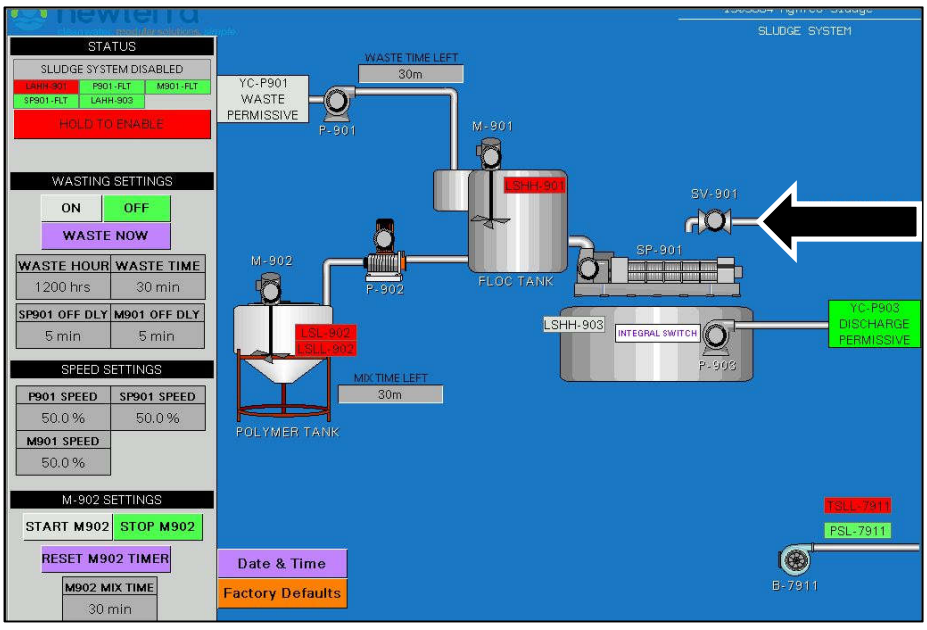	

ITEM	PRE-COMMISSIONING CHECKLIST	INITIAL/DATE
20	Fill TNK-0903 with water. Check for leaks and repair as required. Turn **ON** P-0903 in **HAND** (touch P-0903 and then select **HAND**) and confirm operation. Confirm operation of level switches. Record on the **TAG List – attached TAB D** – in the operational column. Record in deficiencies in the attached **Punch List – TAB C.** 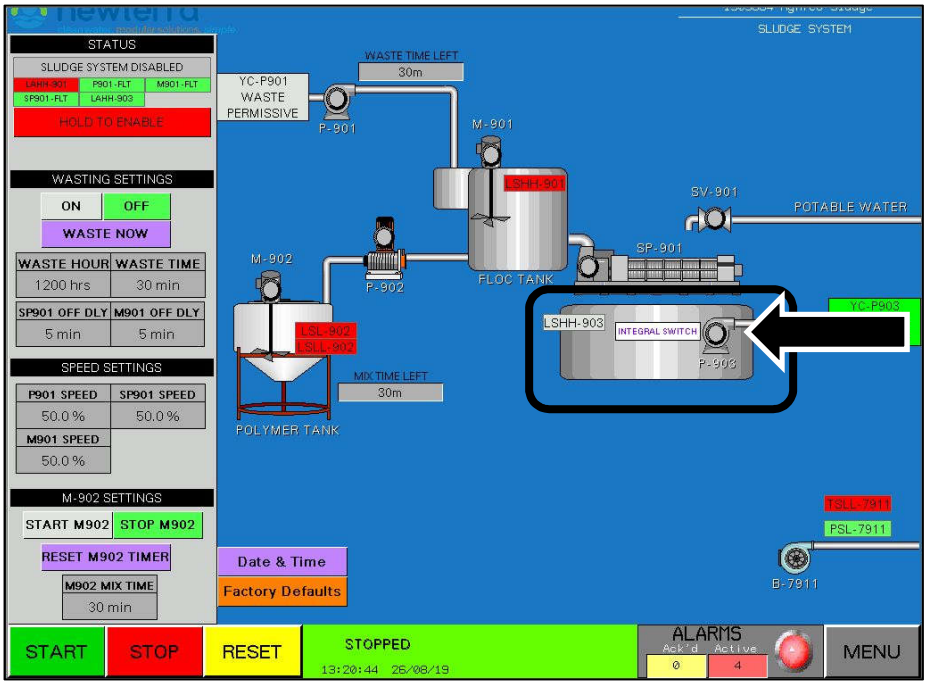
21	Turn **ON** P-0901 in **HAND** (touch P-0901 and then select **HAND**) and confirm operation. Fill the Volute Inlet and Flocculation tanks with water. Check for leaks and repair as required. Record on the **TAG List – attached TAB D** – in the operational column. Record in deficiencies in the attached **Punch List – TAB C.** 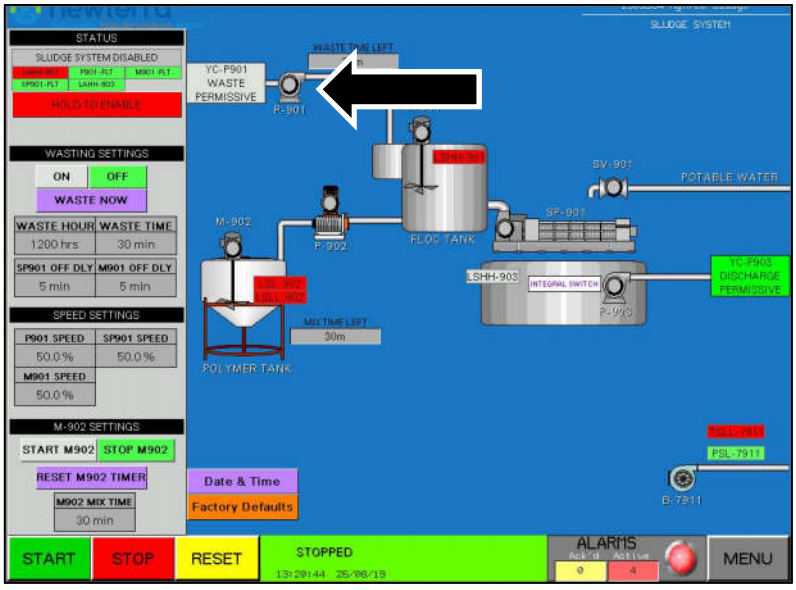	

ITEM	PRE-COMMISSIONING CHECKLIST	INITIAL/DATE
22	Conduct Volute Startup as listed in Section 6 of the O&M Manual as summarized at **TAB F.**	
23	Turn **ON** M-0901 in **HAND** (touch M-0901 and then select **HAND**) and confirm operation. Confirm operation of LSHH-0901 Record on the **TAG List – attached TAB D** – in the operational column. Record in deficiencies in the attached **Punch List – TAB C.** 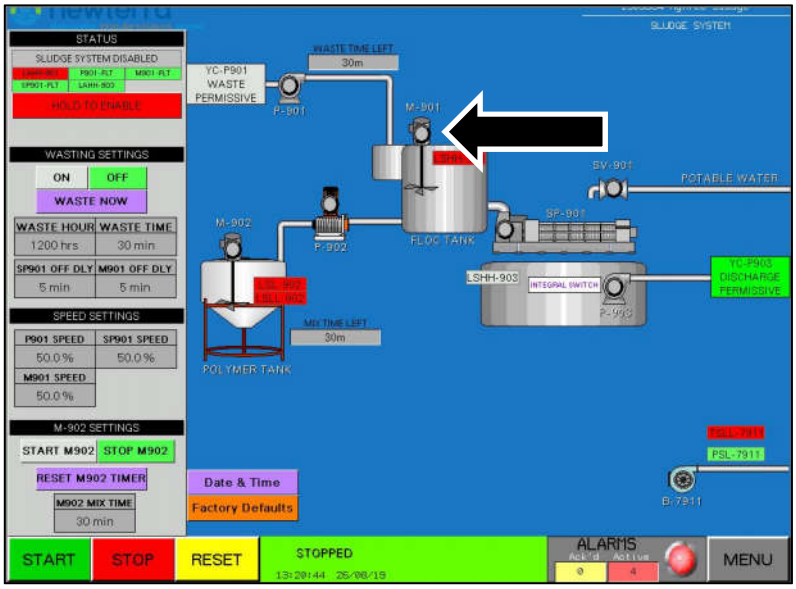	
24	Turn **ON** SP-0901 in **HAND** (touch SP-0901 and then select **HAND**) and confirm operation. Confirm operation Record on the **TAG List – attached TAB D** – in the operational column. Record in deficiencies in the attached **Punch List – TAB C.** 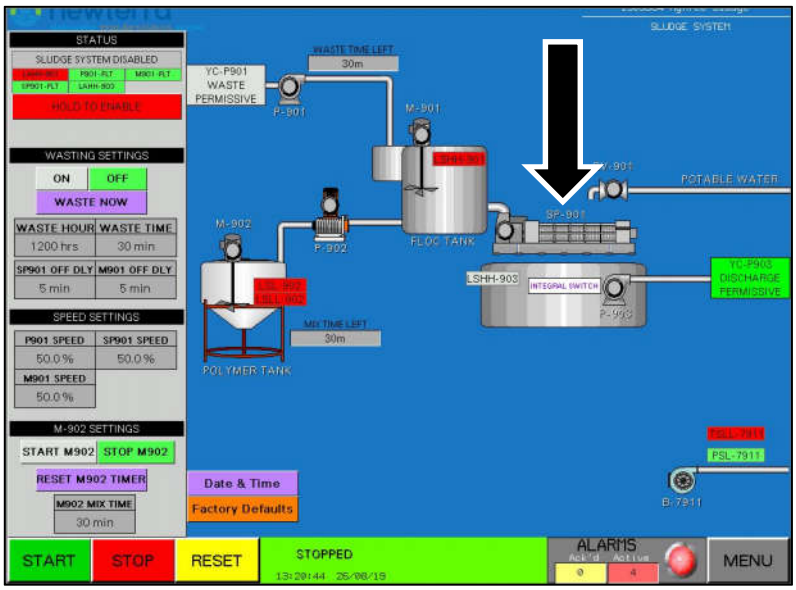	

ITEM	PRE-COMMISSIONING CHECKLIST	INITIAL/DATE
25	Confirm all other building utilities such as -exit signs lighting -building drain operation -building fans/heaters Record on the **TAG List – attached TAB D** – in the operational column. Record in deficiencies in the attached **Punch List – TAB C.**	
26	Run the system in **AUTO**	
27	Confirm Control Narrative (attached at **Appendix H in O&M Manual**) including setpoints, logic and alarms. Sign Off/Initial each line item. Record in deficiencies in the attached **Punch List – TAB C.**	
30	Pre-Commissioning is now complete. Email newterra Project Manager with a scanned signed copy (by authorized customer rep) of the pre-Commissioning Checklist and any additional pictures/Punchlist.	

I hereby confirm that the newterra system has been:

- Successfully installed in accordance with the Pre-Commissioning Instruction
- Any Punch List Items have been recorded as well as sent to the newterra Project Manager.

Customer Rep

Name: _____

Signed: _____

Date: _____

newterra Tech

Name: _____

Signed: _____

Date: _____

1805884 - AGNICO EAGLE VOLUTE - COMMISSIONING INSTRUCTION

This purpose of this report is to test the functionality of electrical, control and mechanical components to ensure the system operates as originally designed. This testing is then documented so it can be referenced later if needed.

The following field test records must be completed by the startup technician on site before operating the process system. This is the last quality check ensuring the process equipment is ready for continuous operation.

newterra highly recommends that the system is started by a factory trained startup technician to ensure the long term success of your project. We understand that this may not always be feasible in which case we would require a highly skilled technician capable of troubleshooting both mechanical and electrical aspects of a process treatment system and be familiar with our manual, equipment and capable of training the operator on operating and maintenance requirements of the treatment system.

This checklist must be sent back to **newterra** Service Department to validate your equipment warranty which begins on the date of shipment from the factory. It can be sent back in one of the following methods:

E-mail service@newterra.com
Fax: Att: Service Department
613-345-7633
If you choose to fax the document then, please follow up with an email explaining that a fax was sent so we can ensure that we received the fax and properly validate the equipment warranty.

Names of Startup Technicians

ITEM	COMMISSIONING CHECKLIST	INITIAL/DATE

1	In accordance with the ordered Quote, the following are within the customer's scope of supply.
	
	• Installation of loose shipped equipment supplied by **newterra**
	• Placement and anchoring (if required) of equipment
	• Interconnecting piping supply and installation
	• Interconnecting electrical and controls supply and installation including connection inside **newterra**'s control panel
	• Electrical power supply to our electrical panel, lightning, grounding, etc.
	• Permitting
	• Potable water supply to the plant site for plant hydraulic test during startup
	• Seed sludge
	• Wastewater testing
	• Chemicals supply and storage
	  ○ NOTE: Based on local regulations, additional safety equipment may be required to store and handle chemicals on the site which have not been included as part of this proposal. This may include but be limited to: eye wash stations, safety showers, spill containment, secondary containment, isolation curtains, isolated ventilated bulk storage buildings, personal protective equipment, constant ventilation systems, vapor suppression equipment, and spill containment equipment. newterra can provide pricing for these options upon request.
	• Treated effluent and waste sludge disposal
	• All civil work including design
	  ○ Tank sizing as per **newterra** supplied PFD, to be confirmed during detailed design	

2	Ensure availability of on-site emergency eyewash station and personal protection equipment. Complete the newterra Job Site Safety Inspection, Analysis and Briefing form – as applicable.	
3	Connect the system **INLET** to the existing WWTP and the **OUTLET** to the Sludge tank and inlet screen as per the **PID at Appendix A** 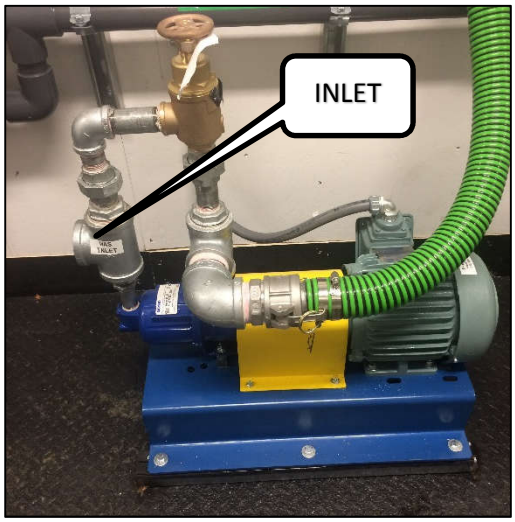 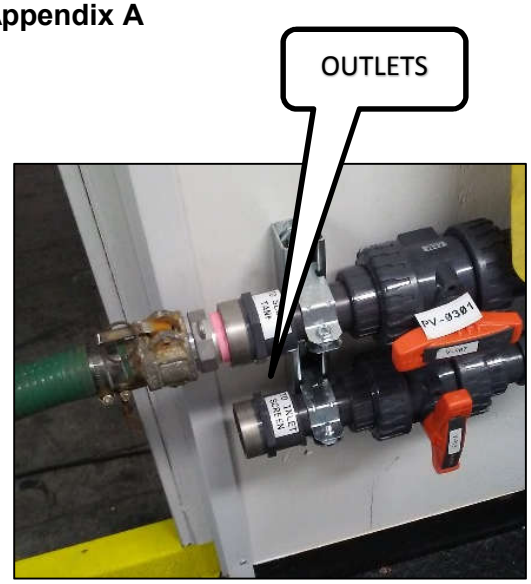	

ITEM	COMMISSIONING CHECKLIST	INITIAL/DATE
4	Complete the Field Aid Startup Checklist at **TAB G**	
5	Start the System in **AUTO**	
6	Re-Confirm Control Narrative (attached at **Appendix H in O&M Manual**) including setpoints, logic and alarms. Sign Off/Initial each line item. Detail deficiencies in **Punch List – See attached – TAB C.**	
7	Mix Polymer in TNK-0902 using the Polymer Educator The qty of polymer to be added can be calculated as follows (also at Section 6.3 in the O&M Manual). **Example**: A filter press is to be used to dewater sludge, and a polymer is to be used to flocculate the sludge. The polymer make-up concentration is to be 0.2% (2 g/L) and to be made up using dry polymer with a density of 0.8 g/mL. The polymer make-up tank has a capacity of 300 L. The flocculation tank has a capacity of 900 L. The wasted sludge has an MLSS concentration of 1% (10 g/L). The ratio of polymer to sludge should be 10 g/kg on a dry basis. 1) Determine the amount of dry polymer required to make up a batch of 0.2% polymer solution: ➢ Determine mass of dry polymer required $m_{DryPolymer} = [Polymer] * V_{PolymerSolution} = (2g/L) * (300L) = 600g$ ➢ Determine volume of dry polymer required $V_{DryPolymer} = \frac{m_{DryPolymer}}{\rho_{DryPolymer}} = \frac{600g}{0.8g/mL} = 750mL$ ➢ Therefore 750 mL of dry polymer, or 3 cups, are required to make-up a batch of 0.2% polymer solution. 2) Determine the dose of polymer solution required to flocculate a batch of sludge: ➢ Determine mass of solids to be flocculated on a dry basis $m_{DrySolids} = [MLSS] * V_{Sludge} = (10g/L) * (900L) = 9000g = 9kg$ ➢ Determine mass of polymer required to flocculate sludge on a dry basis $m_{DryPolymer} = Polymer:SolidsRatio * m_{DrySolids} = (10g/kg) * (9kg) = 90g$ ➢ Determine volume of polymer solution required to flocculate sludge $V_{PolymerSolution} = \frac{m_{DryPolymer}}{[Polymer]} = \frac{90g}{2g/L} = 45L$ ➢ Therefore 45 L of 0.2% polymer solution are required per batch to flocculate the 900 L of 1% sludge.	
8	Start dewatering operations - See OEM Volute for operational adjustments – **TAB H**	
9	Record operational readings in the TAG list at **TAB D**	

ITEM	COMMISSIONING CHECKLIST	INITIAL/DATE
10	Commissioning is now complete. Email newterra Project Manager with a scanned signed copy (by authorized customer rep) of the Commissioning Checklist and any additional pictures/Punchlist. Detail deficiencies in **Punch List – See Attached TAB C**	

I hereby confirm that the newterra system has been:

- Successfully commissioned in accordance with the Commissioning Instruction
- Effluent quality meets requirement
- The Control Narrative has been verified and any deficiencies noted in the Punch List**.**
- Any Punch List Items have been recorded as well as sent to the newterra Project Manager.
- The System is operational.

Customer Rep	newterra Tech
Name: _____	Name: _____
Signed: _____	Signed: _____
Date: _____	Date: _____

1805884 - AGNICO EAGLE VOLUTE – POST-COMMISSIONING INSTRUCTION

ITEM	POST-COMMISSIONING CHECKLIST	INITIAL/DATE
1	All Punch List Items have been addressed – see **Attached Actioned Punch List – TAB C.**	
2	Customer Training (if ordered)	
3	Customer post startup call (if required) to review how the startup went and any feedback. Email newterra Project Manager with a scanned signed copy (by authorized customer rep) of the Post-Commissioning Checklist and any additional pictures/Punchlist.	

I hereby confirm that the newterra system has been:

- Successfully completed post-startup activities
- Effluent quality meets requirement

Customer Rep

Name: _____

Signed: _____

Date: _____

newterra Tech

Name: _____

Signed: _____

Date: _____

TAB A

Customer Job Site Safety Analysis Form

Project # and Description: **1905884 – AGNICO EAGLE VOLUTE**

Date: _____ Revision: _____

Location: _____ Analysis By: _____

Field Personnel: _____ Review By: _____

Job Title/Task: _____ Approved By: _____

Daily: _____

Customer Personnel: Name Position

RECOMMENDED PERSONAL PROTECTIVE EQUIPMENT (PPE):

Hard hat
Safety Glasses
Electrically rated steel-toed boots
Reflective Vest (fire retardant)
Goggles - (on hard hat)
Hearing Protection
Arc flash/fire retardant coveralls
Cut resistant gloves

Customer Job Site Safety Analysis Form

Project # and Description: **1905884 – AGNICO EAGLE VOLUTE**

BASIC JOB	POTENTIAL HAZARDS	PREVENTATIVE/CORRECTIVE ACTION
1. Entering/exiting SVE / Air Sparge Enclosure	1. Biologic hazards- insects, poisonous plants and animals which may cause skin irritation or anaphylactic reaction. 2. Slips, trips, falls due to uneven terrain, slick or muddy ground surfaces, elevated thresholds at access doors causing broken bones. 3. Hearing impairment from compressor or generator noise may cause hearing loss. 4. Inhalation of hazardous vapors causing short or long term illness. 5. Struck by door resulting in contusions to body or head/crush hazards to fingers or hands.	1. Inspect work area in and around compound and manifolds to identify potential biological hazards (spider webs, animal droppings, small varmints, snakes, bee/hornet nests, etc.). Wear cut resistant ANSI 2 gloves (CSE5). 2. Identify, avoid, and mark possible slip, trip, and fall hazards such as holes, obstructions protruding from the ground, elevated thresholds or debris that may be scattered on the ground. Wear CSA approved steel toe boots, reflective vests and safety glasses with side shields (CSE 5). Inspect steps for moisture or obstructions before entering/exiting. Turn lights on to air sparge/SVE compound prior to entering. Inspect areas for ice and if present use traction devices (i.e. Yak Traks) and spread salt to melt ice. 3. Use hearing protection whenever accessing enclosure while equipment is operating (CSE5). 4. Monitor breathing zone with PID and LEL meter upon initial entry to system enclosure. Exit enclosure if vapours exceed {insert action levels from HASP} and allow enclosure to ventilate with all doors open for a minimum of 5 minutes. Repeat breathing zone air monitoring with PID/LEL upon attempting re-entry. 5. Open compound doors and secure using pins attached at back of compound prior to entering. Secure doors prior to leaving compound.
2. System Operations, Inspections, and Data Collection	1. Equipment containing Impacted, high temperature or pressurized liquids and gases (SVE blower discharge, air sparge discharge, oxidizer discharge) may cause burns to the skin. 2. Tight space for work with fixed objects (i.e. manifold, tanks, valves and piping) resulting in head knockers or body bruising may cause cuts or pinches to the body.	1. Inspect tools and equipment for defects. STOP WORK and notify PM if equipment related to the air sparge system is failing (i.e. leaks or vapors) or any unknown condition is observed (i.e. leaking pipes, fittings, and manifold connections). Schedule LOTO if needed with PM and conduct according to EMES/AECOM written LOTO procedures and EMES Work Permit Procedures (CSE 2 & 3). 2. Work with light on. Move slowly, check surroundings and DO NOT use awkward body positioning (i.e. adjusting valves). Work with minimum number of people needed in compound (2). Check for objects and fixed structures while working. Wear hard hat (CSE5). 3. If ambient temperature is above 90 degrees, limit time in compound to 15 minutes with 10 minute interval breaks. Leave compound doors open but secured for ventilation.

Project # and Description: **1905884 – AGNICO EAGLE VOLUTE**

BASIC JOB	POTENTIAL HAZARDS	PREVENTATIVE/CORRECTIVE ACTION
System Operations, Inspections, and Data Collection, (Continued)	3. Heat stress, exhaustion or stroke due to higher temperatures in compound. 4. Overexertion/Strains from lifting heavy equipment or awkward body positioning. 5. Cuts, abrasions or crush hazards due to sharp edges or tight spaces 6. Burns from hot surfaces (blowers, compressors, oxidizer) 7. Line-of Fire from rotating equipment resulting in broken bones or amputations 8. Electrical Shock causing death or burns. 9. Burns / property damage from fire	4. DO NOT lift anything over 50lbs. Team lift or mechanical means (i.e. dolly) is required for items over 50 lbs. (5 gallons of water weighs 41.75 pounds) or awkward items. Bend at knees and lift using legs/arms, not your back, keeping load close to your body. Walk pathway before moving object to remove any obstacles or tripping hazards. Take regular rest/stretch breaks. Change position regularly. DO NOT twist body while lifting/unloading or making system adjustments (i.e. turning valves). 5. Keep hands clear of tight spaces within manifold and piping components. Keep hands clear of latches/cabinets when opening or closing. 6. DO NOT touch components labeled as hot surfaces in compound while system is in operation. Allow components to cool for 15 minutes prior to servicing. 7. DO NOT put hands or fingers into rotating equipment (i.e. After-Cooler, Drive Motors). Keep loose clothing, hair, jewelry away from operating equipment. Keep machine guards in place. Note that hair should be pulled back, and jewelry must be removed prior to work. 8. See 2.1.1. Follow LOTO procedures as discussed in O&M Binder. 9. Confirm 20-lb (9-kg) fire extinguishers are mounted at each entrance/exit to remediation enclosures, are fully charged and have been inspected within 1 year
3. Working outdoors	Slip, trips and falls.	Make note the weather constantly for sudden changes in temperatures. Inspect areas for ice and if present use personal traction devices (i.e. Yak Traks) and spread salt to melt ice, rain/heavy rains making certain areas slippery or not passable by walking.
		Keep work area clear and keep tools and equipment organized and out of walking areas.
		Wear Appropriate PPE, be aware of your surroundings.
		Maintain proper delineated work zone. Recognize hazards and avoid contact.
4. Working in hot/cold environments	Heat/cold stress	Take frequent breaks to cool down/warm up. Sunscreen, light-coloured cotton clothing (task permitting) for hot environments; drink plenty of fluids. Layer clothing (avoid cotton) for warmth in cold environments.
5. Installing/checking mechanical equipment	Pinch points. Cuts, pinches, scrapes from tools	Wear Appropriate PPE, be aware of your surroundings. Use the proper tool for the task being performed.

Customer Job Site Safety Analysis Form

Project # and Description: **1905884 – AGNICO EAGLE VOLUTE**

BASIC JOB	POTENTIAL HAZARDS	PREVENTATIVE/CORRECTIVE ACTION
6. Installing/ checking electrical equipment	Electric shock and sparks	Ensure LOTO procedures are followed to site compliance. Do not wire any equipment while the panel is live and ensure electrical, hydraulic, steam or any other mechanical potential has been dissipated prior to services being performed on the system.
7. Testing of electrical equipment	Testing in a live panel	Wear appropriate PPE - Arc flash/FR coveralls, electrically rated steel-toed boots, voltage rated insulated gloves. Use multi-meter with fused leads. Be aware of your surroundings.
		Only authorized newterra licensed electrician technician(s) are permitted to work on or be closer than 4 feet in any direction to an open live panel. Section off a 4 ft. radius from open panel to ensure a safe work area.
8. Testing of mechanical equipment	Operating components	Ensure LOTO are removed properly and on-site workers are aware of test. Any items that may have been worked on are complete and guards are in place.
	Rotating components	Ensure all guards are in place and equipment is secure. Notify workers of possible hazards with equipment they may be directly affected by.

Field Services Jobsite Inspection Checklist

Project: **1905884 – AGNICO EAGLE VOLUTE** **Job No.:** _____ **Date:** _____

Client/Project Mgr: _____ **Newterra Tech.:** _____

Inspection Criteria	Yes	No	Comments
A. General			
1. Emergency phone numbers and procedures posted?			
2. First aid supplies readily available?			
3. First aid supplies adequate for job manpower?			
4. Required posters and signs posted and readable?			
B. Personal Protective Equipment			
1. Hard hats worn by all personnel in work areas?			
2. Eye and face protection worn as required?			
3. Hearing protection worn as required?			
4. Respiratory protection worn as required?			
5. Safety harnesses and lanyards worn for fall protection?			
6. Workers dressed properly for the job?			
7. Personal protective equipment in good condition?			
8. Safety supplies adequate for job manpower?			
C. Housekeeping			
1. Walkways and stairs kept clear of material and debris?			
2. Cords and hoses strung to prevent trip and fall hazard?			
3. Are liquid spills cleaned up immediately?			
4. Restrooms and eating areas clean?			
5. Fabrication and work areas clean and orderly?			
6. Site trailers and vaults clean and orderly?			
7. Gang boxes clean and orderly?			
8. Trash, scrap, and debris picked up and disposed of?			
D. Fire Protection			
1. Firefighting equipment well marked and accessible?			
2. Employees trained to use fire-fighting equipment?			
3. Fire extinguishers inspected monthly?			
4. Smoking prohibited where flammables are located?			
5. Flammables stored and handled in approved containers?			
6. Oily rags disposed of in an approved container?			
7. Temp. heaters kept 20' away from combustible materials?			

Field Services Jobsite Inspection Checklist

Inspection Criteria	Yes	No	Comments
E. Material Handling and Storage			
1. Materials stored neatly in stacks or piles?			
2. Cylindrical materials racked or cribbed and blocked?			
3. Loose materials containerized or palletized?			
4. Aisle space maintained around stored materials?			
5. Storage areas kept clear of scrap, debris, and trash?			
6. Slings and chokers in good condition?			
7. Chain falls and come-a-longs in good condition?			
8. Cranes operated in a safe manner by operators?			
9. Workers move from under suspended loads?			
10. Workers know and use proper crane signals?			
11. Crane hand signals posted on jobsite?			
12. Workers attach tag lines to loads?			
13. Hoisting hooks have safety latches?			
14. Running cables inspected and in good condition?			
15. Load limits marked on all hoisting rigs?			
F. Tools			
1. Power tools have guards in place?			
2. Power tools either grounded or double insulated?			
3. Power tool cords and plugs in good condition?			
4. Impact tools with mushroomed heads dressed as needed?			
5. Broken tools repaired or replaced as needed?			
G. Welding and Cutting			
1. Gas cylinders stored upright and secured?			
2. Oxygen cylinders segregated from fuel gas cylinders?			
3. Full cylinders segregated from empty cylinders?			
4. Caps secured on all cylinders not in use?			
5. Welding leads in good condition?			
6. Welding screens erected in high flash areas?			
7. Welding blankets used to protect materials/equipment?			
8 Fire watches posted as needed?			
9. Proper permits issued (as required)?			
10. Fire extinguishers kept close to hot work areas?			

Field Services Jobsite Inspection Checklist

Inspection Criteria	Yes	No	Comments
H. Electrical			
1. 120 volt tools and equipment tested and tagged as such?			
2. Extension cords heavy duty, 3-wire type?			
3. Temporary lights equipped with bulb guards?			
4. Sufficient lighting to work and move safely?			
5. Lockouts used to de-energize operational systems?			
6. Welders and stationary equipment properly grounded?			
I. Ladders			
1. Straight ladders secured at top landing?			
2. Straight ladders extend 36" above top landing?			
3. Straight ladders have feet or blocked at bottom?			
4. Straight ladders set up with a 4 to 1 slope?			
5. Top step of stepladders not used as a step?			
6. Climbing the back of stepladders prohibited?			
7. Workers use the proper height ladder for the job?			
8. Portable ladders used only by company employees?			
J. Scaffolds and Manlifts			
1. All scaffold parts and hardware used as required?			
2. All scaffold hardware and parts in good condition?			
3. Scaffolds fully planked?			
4. All scaffold planks cleaned?			
5. Scaffolds have guardrails, midrails, and toe boards?			
6. Wheels on rolling scaffolds locked during scaffold use?			
7. Workers prohibited from riding rolling scaffolds?			
8. Manlifts in good operating condition?			
9. Only trained employees allowed to operate manlifts?			
10. Outriggers extended when manlifts are in use?			
11. Workers prohibited from exiting raised manlifts?			
12. Workers only allowed to work from floor of basket?			
13. Workers required to tie-off while basket is raised?			
14. Only company employees allowed to operate manlifts?			

Field Services Jobsite Inspection Checklist

Inspection Criteria	Yes	No	Comments
K. Handrails and Hole Covers			
1. Perimeters and drop-offs protected by rails or cables?			
2. Railings sturdy, continuous, and have midrails?			
3. Railings replaced after temporary removal?			
4. Floor holes protected by railings or hole covers?			
5. Hole covers secured to prevent movement?			
6. Hole covers marked to prevent accidental removal?			
7. Hole covers replaced after temporary removal?			
L. Excavation and Trenching			
1. Excavations 5' or deeper shored, sloped, or boxed?			
2. Workers stay within shored area?			
3. Excavated spoil stored at safe distance from work?			
4. Barricades placed on all open sides at end of shift?			
5. Ladders placed every 50' for entry and egress?			
6. Excavations de-watered as needed?			
7. Backfill placed as soon as possible?			
M. Employee Communications			
1. Do foremen communicate with their crews on job methods?			
2. Do foremen react to employee safety recommendations?			
3. Do foremen address unsafe actions and conditions?			
4. Are safety meetings held weekly with all employees?			

Comments:	

ADDITIONAL COMMENTS ON BACK OF FORM

Date Completed (DD/MMM/YY)**:** _____

Completed By (Print & Sign)**:** _____

Completed By (Print & Sign)**:** _____

newterra
clean water. modular solutions. simple.

1291 California Avenue, P.O. Box 1517
Brockville, ON, K6V 5Y6
T: 800.420.4056 F: 289.203.1319

PROJECT PUNCH LIST

General Notes

Put any notes, issues, etc. here that the newterra Project Manager should be made aware of/General comments.

newterra
clean water. modular solutions. simple.
1291 California Avenue, P.O. Box 1517
Brockville, ON, K6V 5Y6
T: 800.420.4056 F: 289.203.1319

Punch list

Put all punch list items that newterra or others need to take care of prior to completion.

ITEM	DESCRIPTION (INCLUDE P&ID TAG IF APPICABLE)	Date	Initials	Date Closed	Initials
1					
2					
3					
4					
5					
6					
7					
8					

1291 California Avenue, P.O. Box 1517
Brockville, ON, K6V 5Y6
T: 800.420.4056 F: 289.203.1319

ITEM	DESCRIPTION (INCLUDE P&ID TAG IF APPICABLE)	Date	Initials	Date Closed	Initials
9					
10					
11					
12					
13					
14					
15					
16					
17					

1291 California Avenue, P.O. Box 1517
Brockville, ON, K6V 5Y6
T: 800.420.4056 F: 289.203.1319

ITEM	DESCRIPTION (INCLUDE P&ID TAG IF APPICABLE)	Date	Initials	Date Closed	Initials
18					
19					
20					
21					
22					
23					
24					
25					
26					

1291 California Avenue, P.O. Box 1517
Brockville, ON, K6V 5Y6
T: 800.420.4056 F: 289.203.1319

ITEM	DESCRIPTION (INCLUDE P&ID TAG IF APPICABLE)	Date	Initials	Date Closed	Initials
27					
28					
29					
30					
31					
32					
33					
34					
35					

newterra
clean water. modular solutions. simple.

1291 California Avenue, P.O. Box 1517
Brockville, ON, K6V 5Y6
T: 800.420.4056 F: 289.203.1319

ITEM	DESCRIPTION (INCLUDE P&ID TAG IF APPICABLE)	Date	Initials	Date Closed	Initials

1905884 – AGNICO EAGLE VOLUTE						
Item	**TAG**	**PartNum**	**Part Description**	**Verified**	**Operational**	**Reading during Operation (if applicable)**
	B-7911	**25747**	Blower, Cincinnati LM-4, 4.7" X 2.9" Width Alum wheel			
	Backflow Preven	**37390**	Backflow Preventer, 1/2", 007M1QT			
	CC-0901	**26664**	Calibration column, 1000mL 0-16gph			
	H-7911/2	**38168**	Heater, Forced, Air, Ouellet, OAS 10 KW 600V 3ph C/W Stat, OAS10036T			
	LSH-P903	**M1343**	Switch, Level, Mech Float, Narrow Angle, N.O., Blue			
	LSHH-0901	**19279**	Switch, Level, Mech Float, Narrow Angle, N.C., YEL			
	LSHH-0903	**19279**	Switch, Level, Mech Float, Narrow Angle, N.C., YEL			
	LSL-0902	**M1343**	Switch, Level, Mech Float, Narrow Angle, N.O., Blue			
	LSLL-0902	**M1343**	Switch, Level, Mech Float, Narrow Angle, N.O., Blue			
	M-0902	**24628**	Delta PG-2 Horsepower = 1/2 hp			
	P-0901	**M1255**	Pump, Progressive Cavity, Moyno, 33301			
	P-0902	**21485**	Pump, Grundfos, DDA 60-10 AR-PV/E/C-F-32A7A7BG			
	P-0903	**17138**	Pump, Sump, Zoeller M53 Automatic Operation			
	PI-0901	**16203**	Gauge, Pressure, 0-60psi, Indumart, P16T2-FG-60			
	PI-0902	**16203**	Gauge, Pressure, 0-60psi, Indumart, P16T2-FG-60			
	PI-0903	**20172**	Gauge, Pressure, 0-15psi, Indumart, P22T2-FG-15			
	PRV-0901	**21299**	Valve, Relief, Back Pressure, Kunkle, 1", Liquid Service			
	PSL-7911	**22539**	Switch, Pressure, 1823-00			
	PSL-7911	**17333**	Meter, Flow, Pitot Tube, 4"			
	SP-0901	**40616**	Volute, Dewatering Press, MYDL-131			
	Stand	**42892**	Volute Stand			
	TNK-0902	**21656**	Norwesco P/N 62343 Cone Bottom Tank with Stand Capacity: 300 Gallon			
	TNK-0903	**21656**	High Density Linear Polyethylene Open Top Rectangular Tank 165 US Gallon (625 Ltr.) Capacity			
	TSLL-7911	**10515**	Switch, Temperature Thermostat, CN TF115-001			

1291 California Avenue, P.O. Box 1517
Brockville, ON, K6V 5Y6
T: 800.420.4056 F: 289.203.1319

Pre-Commissioning Checklist – 1905884 – AGNICO EAGLE VOLUTE

(Executed and Returned from Customer)

Please note that **newterra** has a limited number of Technicians. To successfully support your startup, **newterra** requires that the Pre-Commissioning Checklist be returned at least 15 business days prior to mobilizing a Technician to site (subject to Technician availability). **newterra** will not mobilize to site until the Pre-Commissioning Checklist has been executed and returned to service@newterra.com Or by Fax to: 289.203.1319.

If newterra startup activities are delayed due to lack of site readiness then there may be additional charges associated with overtime and/ or additional days on site.

newterra highly recommends that the system is started by a factory trained startup technician to ensure the long-term success of your project. We understand that this may not always be feasible in which case we would require a highly skilled technician capable of troubleshooting both mechanical and electrical aspects of a process treatment system and be familiar with our manual, equipment and capable of training the operator on operating and maintenance requirements of the treatment system.

The purpose of this report is to ensure that the customer is prepared for startup.

Checklist	Customer Initials	newterra Initials
Complete a visual inspection of all Equipment when placed. **Record any damage to the systems that may have occurred during shipping and provide photos to newterra. Order replacement parts		
Please read through the packing list (located in the manual) and ensure **ALL** the correct equipment was delivered. Some items that have shipped loose with your system that will need to be installed prior to start up, these may include exterior components such as tanks, stacks, filters and hoods. Sufficient hardware should have been supplied to facilitate installation of scope supplied parts. Notify of shortages.		
Any external equipment such as tanks, well pumps, oxidizers, degasifiers, etc. need to be installed, plumbed and wired prior to start up.		
Verify that equipment has been installed on a **SOLID, LEVEL** area. Call if any questions.		
Verify that system has been installed in accordance with the system layout drawing.		
Verify that the required approvals are in place to allow the system to discharge air and water.		
Verify site power is installed to the control panel and necessary electrical approvals have been completed.		
Verify that all Electrical wiring is completed and wired according to the Field Aid/ project O&M manual.		
Verify that all Electrical Equipment is secure and **ALL TERMINALS** are tight, including inside panels.		
Verify that all process piping has been installed and terminated to the correct place.		
Verify that all field piping is complete. Feed and Waste are connected to the operating system.		
Some unions in the system may have been loosened for shipment. This is done to prevent damaging susceptible equipment, especially flow meters. All unions in the systems should be checked and tightened.		
Some items may have been secured with brackets or tie downs for shipment – ensure these have been removed (e.g. reciprocating compressors/ stacked blowers).		
If an alarm auto-dialer, verify that a phone line is installed and activated. Number ____.____._____		
If Ethernet is to be used on site please provide 2 Static IP Addresses ____.____.____.____ Please verify connection. ____.____.____.____		
In colder climates, if you do not plan on starting up the system before the winter months, please refer to your O&M manual for instructions on extended shutdowns. It is imperative that the correct measures be taken to prevent freezing water from damaging your system.		
If the system has been winterized, ensure all anti-freeze has been drained and disposed of in accordance with local regulations.		
Email pictures of power connection, site piping connections and installed equipment to service@newterra.com Newterra Support 1.800.420.4056 ext. 1234		

1291 California Avenue, P.O. Box 1517
Brockville, ON, K6V 5Y6
T: 800.420.4056 F: 289.203.1319

Pre-Commissioning Checklist – 1905884 – AGNICO EAGLE VOLUTE

(Executed and Returned from Customer)

MBR Specific Checks	Customer Initial	newterra Initial
Verify that Ethernet network is installed and activated if required.		
If Ethernet is to be used on site please provide 2 Static IP Addresses ____.____.____.____ ____.____.____.____		
Verify fresh water is available for Wet Test.		
Is waste activated sludge from an operating WWTP available for start-up (Seed Sludge)		
Verify Sufficient amount of sewage is available to start system (Check with newterra to determine actual amounts required).		

RO Specific Checks	Customer Initial	newterra Initial
Ensure all tanks are clean and free of dirt and debris		
Verify that a Fresh Water supply is installed to system.		
Ensure that the necessary chemicals for system operation and cleaning are available for use for starting the installation and commissioning phase.		
Verify the feed water quality		
Verify building process flow and instrumentation matches P&ID drawing. Check off drawing components against actual		
DO NOT LOAD THE MEMBRANES UNTIL DIRECTED as all system inlet piping must be flushed thoroughly before it is connected to the RO system.		

DA Specific Checks	Customer Initial	newterra Initial
GENERAL INSTALLATION		
Stainless Steel nameplate present, visible and contains make and model information in agreement with vendor drawings		
Vessel Saddles Bolted To Structural Steel		
Vessel Properly Insulated for Personnel Protection at a minimum		
Access Platform Properly installed for full access to heater section		
Vessel Manway Gaskets appear to be undamaged		
VESSEL INTERNALS		
Heater Section Tray Assemblies Properly fastened and have been installed per the O & M manual.		
Equalizer connection to storage tank is unobstructed by any shipping materials		
Spray Nozzles appear unobstructed and undamaged by shipping		

1291 California Avenue, P.O. Box 1517
Brockville, ON, K6V 5Y6
T: 800.420.4056 F: 289.203.1319

Pre-Commissioning Checklist – 1905884 – AGNICO EAGLE VOLUTE

(Executed and Returned from Customer)

DA Specific Checks	Customer Initial	newterra Initial
PIPING		
Pipes properly insulated for Personnel protection at a minimum		
Relief valve installed and discharge piping run to roof		
Piping systems properly flushed		
Vent Valve is installed and fully open for initial vessel fill		
Steam Control Valve and Muffling plate installed as per drawings		
Low pressure steam trap isolated and discharge piped to flash separator		
Low pressure flash steam lines installed and isolated for initial testing		
Vacuum breaker installed per manufacturer's instructions		
Overflow trap installed with discharge piped to Blowdown Tank		
Condensate control valve installed and isolated for initial testing		
Strainer within condensate control valve station installed and cleaned		
Makeup control valve installed and isolated for initial testing		
Strainer within makeup control valve station installed and cleaned		
Level bridle and gauge glass column installed as per manufacturer's drawings. Vessel isolation valves closed for initial fill.		
Sight glass sections installed with proper washers and do not have any apparent cracks or defects.		
Level switches installed at proper heights relative to the vessel according to the manufacturer's drawings		
Level transmitter properly installed as per instrument installation detail IS-8308		
Pressure transmitter is properly installed as per instrument installation detail IS-8127		
Pressure and temperature Gauges installed with isolation valves as needed.		
Deaerator Steam flow transmitter properly installed as per instrumentation installation detail IS-8308		
Vessel Drain valve installed and fully closed for initial fill		
Chemical feed connection valved and capped. Proper chemical feed is not required at this stage of commissioning		
All remaining spare connections on the storage tank and heater section should be tightly secured with a blind flange.		
CONTROL AND POWER WIRING		
120-volt power is run to Deaerator control panel		
Three Level switches are wired back to Deaerator Control Panel		
Pressure Transmitter is wired back to Deaerator Control Panel		
Level Transmitter is wired back to Deaerator Control Panel		
Steam Pressure Control Valve is wired back to Deaerator Control Panel		
Makeup Water Control Valve is wired back to Deaerator Control Panel		
Deaerator Steam flow transmitter is wired back to existing panel.		

1291 California Avenue, P.O. Box 1517
Brockville, ON, K6V 5Y6
T: 800.420.4056 F: 289.203.1319

Pre-Commissioning Checklist – 1905884 – AGNICO EAGLE VOLUTE

(Executed and Returned from Customer)

Comments: Note any deficiencies or damage to the system on arrival.

In the event additional parts are required to be sent for commissioning, please provide a shipping address, contact name and cell number

Provide a list of PPE required or any additional Health and Safety or training requirements that will be required for site access.

Provide a list of other trades (with contact numbers) that will be onsite during commissioning.

1291 California Avenue, P.O. Box 1517
Brockville, ON, K6V 5Y6
T: 800.420.4056 F: 289.203.1319

Pre-Commissioning Checklist – 1905884 – AGNICO EAGLE VOLUTE

(Executed and Returned from Customer)

Site Address: _____

Onsite Contact Name & Cell Number: _____

Customer Name (print) _____

Customer Sign-Off _____

Date: _____

For Office Use Only	newterra Initial
Has the modem been provisioned?	
Is there remote access for programmer?	
Does the technician need programming access?	
Has TSA Been returned?	

newterra ltd.
1291 California Avenue, Brockville, ON K6V 5W3
(800) 420-4056 / www.newterra.com

6.0 PLANT START-UP, OPERATING GUIDELINES AND MONITORING

6.1 Mechanical & Electrical Start-up Procedure

- If the system is being started for the first time, work your way through the **newterra Commissioning Checklist** presented in **Appendix C** of this O&M Manual.
- If the kill switch on the panel (red mushroom shaped button) is pulled out, then push it in to confirm that the system is off.
- Push the reset button on the operator interface to reset all alarms.
- Make sure there are no obstructions over any moving parts, for example a jacket laying on a belt drive.
- Put all HAND/OFF/AUTO switches to AUTO **(A)** mode.
- Pull the kill Button (red button on panel) out to start the process.
- Push the start button on the Operator Interface.

6.2 Start-up

The Method of Start Operation

Warning
• Please do not operate the machine with side cover open. It may cause injury to the operating person. • Please do not put hands or objects into the mud cake draining exit. It may cause injury or damage the machine. • Please do not put hands or objects into the flocculating and mixing trough when the machine is running. It may cause injury or damage the machine.

© 2019 by newterra, ltd.
All rights reserved. No part of this document may be reproduced or transmitted in any form or by any means, electronic, mechanical, photocopying, recording, or otherwise, without prior written permission of newterra ltd.

newterra ltd.
1291 California Avenue, Brockville, ON K6V 5W3
(800) 420-4056 / www.newterra.com

◆ The examination before start operation

Inspection inner tubing of the machine

① Check whether the connections of inner tubing and external pipelines are loose.

② Open the valve for water supply and check whether the tubing for supplying water leaks.

③ Open the valve for maintenance and check whether the water pipes leaks.

④ Check the valve whether it is on the following state.

Name	State
Ball valve below the flocculating and mixing trough	Off
Maintaining valve	Off

Inspection for other matters

Check whether there are other matters like packing material in the measuring trough or the flocculating and mixing trough.

Inspection after wiring power supply

- Please be sure to inspect and confirm the power supply wiring by professional people in case of electric shock.
- Please screw the external terminals in case of fire.

① Please confirm to cut off the total power supply and the power supply in the electric control cabinet

② Please screw the bolts of terminals in the electric control cabinet

③ Please confirm the operation switch (COS-1) on the electric control cabinet is on STOP state.

④ Please turn on the switch for total power supply.

⑤ Please check the voltage of terminal which receives electric power on the electric control cabinet by universal meter and check whether it accords with the appointed voltage.

⑥ Please turn on the total power supply on the electric control cabinet (ELCB-1)

⑦ Please check whether the indicator light of the electrical cabinet is on.

⑧ Please turn on the operation power (MCCB-C)、the duct pilot power (CP-1)、the power for spray (CP-2) in the electrical cabinet.

© 2019 by newterra, ltd.
All rights reserved. No part of this document may be reproduced or transmitted in any form or by any means, electronic, mechanical, photocopying, recording, or otherwise, without prior written permission of newterra ltd.

newterra ltd.
1291 California Avenue, Brockville, ON K6V 5W3
(800) 420-4056 / www.newterra.com

Check rotation direction of the motor

Warning
• Please connect and check the electric wire by professional people in case of electric shock.

① Please be sure to check whether the wiring for electric supply phase is correct after wiring.

② Please cut off all the operation selector switches (CSL) in the electrical cabinet.

③ Please turn the operation model switch (COS-1) in the electrical cabinet to manual.

④ Please turn the operation switch of screw shafts and blender for flocculating and mixing trough to state ON and check rotation direction of every motor. The correct rotation direction of every motor is as follows:

Screw shafts: counter clockwise rotation seen from the back to the front of the mud-cake exit.

Blender for flocculating and mixing trough: clockwise rotation seen from up to down.

⑤ If motor reverse, please connect the first phase and the third phase reversely. Please be sure to cut off the total power and the electrical cabinet power firstly.

© 2019 by newterra, ltd.
All rights reserved. No part of this document may be reproduced or transmitted in any form or by any means, electronic, mechanical, photocopying, recording, or otherwise, without prior written permission of newterra ltd.

Field Aid Startup Checklist

Project # and Description: **1805884 - AGNICO EAGLE VOLUTE**

Purpose: To ensure all items specific to a Remediation system are checked and tested
Procedure: Verify the requirements listed in the table below have been met.

PRELIMINARY SYSTEM ASSESSMENT

Requirement	Initials/Date
Trace all pipelines and ensure all manual valves are in the correct orientation and gate valves are fully open where required.	
Prime all, non-self-priming pumps and ensure water has been provided to prevent any equipment from running dry.	
Ensure any obvious spill hazards (open sample ports, tanks with open ports) are remedied.	
If applicable ensure building fan/louver shipping braces have been removed before proceeding with test.	

INSTRUMENT & IO VERIFICATION

Requirement	Initials/Date
All customer provided instruments have been spanned according to the control narrative settings	
All field wiring inputs have been checked from device through to the Control Panel	
ESTOP - Verify safety controls/ interlocks/ shutdown interlocks are functional before proceeding.	
ESTOP – Verify devices do not run in HAND or AUTO with the ESTOP pushed in	
All outputs to field wiring have been checked from the Control Panel through to the device	
All motors are rotating in the correct direction	

LEAK TEST VERIFICATION

Requirement	Initials/Date
All devices operate with no detectable set up/installation issues – i.e. uncharacteristic noise, pressures etc. Consult with production mechanical where required.	
Monitor the system equipment and piping to ensure no leaks are present. If leaks are found identify and notify production.	

Field Aid Startup Checklist

Project # and Description: **1805884 - AGNICO EAGLE VOLUTE**

SYSTEM LABELLING CHECKLIST

Requirement	Initials/Date
Customer to provide field piping labels & device labels applied (water arrows, hot surface, device tags, etc.)	

MBR SUPPLEMENTAL CHECKLIST

Requirement	Initials/Date
Check all diffuser patterns for an even bubble pattern	
Check flux and permeability values	
Check that the level switch high (or level set point high) in the membrane tank is sufficiently above the membranes	
Ensure a constant recirculation flow from the membrane tank is achieved.	

STARTUP CLOSEOUT CHECKLIST

Requirement	Initials/Date
Motor amp readings have been taken and recorded for all available motors.	
Make sure any electrical or P&ID drawing changes are communicated back to newterra for record. Photos of marked up drawings work.	

Field Aid Startup Checklist

Project # and Description: **1805884 - AGNICO EAGLE VOLUTE**

COMPONENT TEST RECORD

Function:		Device:			Manufacturer:				
Model #:					Device Serial #:				
Motor Manufacturer:					Area Classification Tag Checked:				
Motor Model #:					Expected Rotation - Non Drive End:				
Motor Serial #:					Rotation as Expected:				
HP:		Voltage:		SF:		Frame:		RPM:	
Phase:		FLA:		OL Setting:		ENCL.:		Temp Code:	
Factory Test:					VFD Readings:				
L1	L2	L3			L1	L2	L3		
			Amps	60Hz				Amps	60Hz
			Amps	30Hz				Amps	30Hz
L1/L2	L2/L3	L3/L1			L1/L2	L2/L3	L3/L1		
			Vac					Vac	

Function:		Device:			Manufacturer:				
Model #:					Device Serial #:				
Motor Manufacturer:					Area Classification Tag Checked:				
Motor Model #:					Expected Rotation - Non Drive End:				
Motor Serial #:					Rotation as Expected:				
HP:		Voltage:		SF:		Frame:		RPM:	
Phase:		FLA:		OL Setting:		ENCL.:		Temp Code:	
Factory Test:					VFD Readings:				
L1	L2	L3			L1	L2	L3		
			Amps	60Hz				Amps	60Hz
			Amps	30Hz				Amps	30Hz
L1/L2	L2/L3	L3/L1			L1/L2	L2/L3	L3/L1		
			Vac.					Vac.	

Field Aid Startup Checklist

Project # and Description: **1805884 - AGNICO EAGLE VOLUTE**

COMPONENT TEST RECORD

Function:		Device:			Manufacturer:				
Model #:					Device Serial #:				
Motor Manufacturer:					Area Classification Tag Checked:				
Motor Model #:					Expected Rotation - Non Drive End:				
Motor Serial #:					Rotation as Expected:				
HP:		Voltage:		SF:		Frame:		RPM:	
Phase:		FLA:		OL Setting:		ENCL.:		Temp Code:	
Factory Test:					VFD Readings:				
L1	L2	L3			L1	L2	L3		
			Amps	60Hz				Amps	60Hz
			Amps	30Hz				Amps	30Hz
L1/L2	L2/L3	L3/L1			L1/L2	L2/L3	L3/L1		
			Vac					Vac	

Function:		Device:			Manufacturer:				
Model #:					Device Serial #:				
Motor Manufacturer:					Area Classification Tag Checked:				
Motor Model #:					Expected Rotation - Non Drive End:				
Motor Serial #:					Rotation as Expected:				
HP:		Voltage:		SF:		Frame:		RPM:	
Phase:		FLA:		OL Setting:		ENCL.:		Temp Code:	
Factory Test:					VFD Readings:				
L1	L2	L3			L1	L2	L3		
			Amps	60Hz				Amps	60Hz
			Amps	30Hz				Amps	30Hz
L1/L2	L2/L3	L3/L1			L1/L2	L2/L3	L3/L1		
			Vac.					Vac.	

Field Aid Startup Checklist

Project # and Description: **1805884 - AGNICO EAGLE VOLUTE**

COMPONENT TEST RECORD

Function:		Device:			Manufacturer:				
Model #:					Device Serial #:				
Motor Manufacturer:					Area Classification Tag Checked:				
Motor Model #:					Expected Rotation - Non Drive End:				
Motor Serial #:					Rotation as Expected:				
HP:		Voltage:		SF:		Frame:		RPM:	
Phase:		FLA:		OL Setting:		ENCL.:		Temp Code:	
Factory Test:					VFD Readings:				
L1	L2	L3			L1	L2	L3		
			Amps	60Hz				Amps	60Hz
			Amps	30Hz				Amps	30Hz
L1/L2	L2/L3	L3/L1			L1/L2	L2/L3	L3/L1		
			Vac					Vac	

Function:		Device:			Manufacturer:				
Model #:					Device Serial #:				
Motor Manufacturer:					Area Classification Tag Checked:				
Motor Model #:					Expected Rotation - Non Drive End:				
Motor Serial #:					Rotation as Expected:				
HP:		Voltage:		SF:		Frame:		RPM:	
Phase:		FLA:		OL Setting:		ENCL.:		Temp Code:	
Factory Test:					VFD Readings:				
L1	L2	L3			L1	L2	L3		
			Amps	60Hz				Amps	60Hz
			Amps	30Hz				Amps	30Hz
L1/L2	L2/L3	L3/L1			L1/L2	L2/L3	L3/L1		
			Vac.					Vac.	

Field Aid Startup Checklist

Project # and Description: **1805884 - AGNICO EAGLE VOLUTE**

Acceptance criteria has been met:	**YES** **NO**
Sign/Date:	
Print Name:	

Additional items that need completion must be detailed on the Punch List Items sheet.

Adjust water-content rate of the dewatered mud-cake

Regulate the water-content rate of the dewatered mud-cake and deposing capacity by regulating 「backing pressboard」 and 「 frequency changer of screw shafts (INV-1) 」.

① Set the gap of backing pressboard

Decrease water-content rate.....Decrease water-content rate by making the gap of backing pressboard smaller and increase the pressure in the volute body.

Increase water-content rate.....Increase water-content rate by making the gap of backing pressboard bigger and decrease the pressure in the volute body.

※Attention: Please do not set the gap of backing pressboard less than 4mm. The smaller the gap of backing pressboard, the lower the water-content rate of mud-cake, however it will lead overload to the machine and make vulnerable parts (moveable annular plates, screw shaft) frayed soon.

② Set frequency changer of screw shaft (INV-1)

Decrease water-content rate.....As frequency of frequency changer decreases, the rotary speed of the screw shafts decreases and deposing capacity decreases accordingly. It takes longer time to dewater and concentrate the sludge in the volute body, so the water-content rate decreases.

Increase water-content rate.....As frequency of frequency changer increases, the rotary speed of the screw shafts increases and deposing capacity increases accordingly. It takes shorter time to dewater and concentrate the sludge in the volute body, so the water-content rate increases.

※Attention: Please regulate every part of the machine according to the rotary speed change of the screw shaft

Operation Adjustment

Warning
• Please do not touch the inner parts of the electrical cabinet with wet hand in case of electric shock. • Please wear insulated shoes when operating in case of electric shock. • Please regulate the frequency changer under the condition of power off in case of electric shock. • Please regulate the backing pressboard under the condition that the machine stops working in case that hands or tools are involved into the machine.

Attention
• Please do not set the gap of backing pressboard less than 4mm. In case that the dewaterer overloads in consequence of excessive pressure in the volute body and service life of vulnerable parts (moveable annular plate · screw shaft) will be shortened.

◆ About operation adjustment

It is unnecessary to do any other regulation except for adding flocculant after finishing regulation for the first time.

Please check the residual quantity of flocculant regularly.

As the sludge shape will change enormously in the instance that the sludge density changes in a wide range (±10 percents upward), please regulate the sludge input quantity, water-content rate and disposing capacity of dewatered mud-cake.

Regulation in the instance of sludge density changing

It will affect the disposing capacity if the sludge density is changing. Please regulate it by the methods as follows.

Please accelerate the motor rotary speed of screw shafts and regulate the sludge input quantity by pipe of adjusting liquid level to increase disposing capacity.

Please slow down the motor rotary speed of screw shafts and regulate the sludge input quantity by pipe of adjusting liquid level to decrease disposing capacity.

※If increasing the disposing capacity blindly without regulating the gap of backing pressboard, it will make the sludge accumulated superfluously in the inner volute body. Under this condition, it will cause the motors overload as well as make vulnerable parts like moveable annular plate, screw shaft and other parts frayed soon。

Regulation in the instance of water-content rate increasing

The decrease of sludge density will lead decreasing of solid dosing quantity and increase water-content rate. The decrease of solid dosing quantity will lead decreasing of inner pressure of the volute body and decrease dewatering capacity.

Under this condition, increase sludge input quantity to increase solid dosing quantity.

※In the instance of increasing sludge input quantity, please be sure that the liquid level of the volute body is lower than the liquid level of the flocculating and mixing trough (position H) to confirm dewatering continuity through appropriate adjustment.

※In the instance of increasing sludge input quantity, if sludge density increases, it will be beyond the normal disposing capacity of the volute body, the liquid level of the volute body will be higher than the liquid level of the flocculating and mixing trough (position H) and it will lead the instance as follows, so it is necessary to inspect the sludge density regularly.

Water-content and disposing capacity of dewatered mud-cake are instable.

Sludge quantity provided to the volute body is instable.

Pump stops working in consequence of impurity on the electrodes.

Service life of pumps will be shortened as pumps are in regular intermittent operation state.

Check whether the flocs formed are perfect after the polymeric flocculant reacting with sludge in the flocculating and mixing trough. The ideal diameter of flocs is from5mm to 10mm. If the formed flocs are not perfect, it may be

caused by unsuitable rotary speed of blender which can be regulated by frequency changer (INV-2).

<Example of perfect formed flocs>

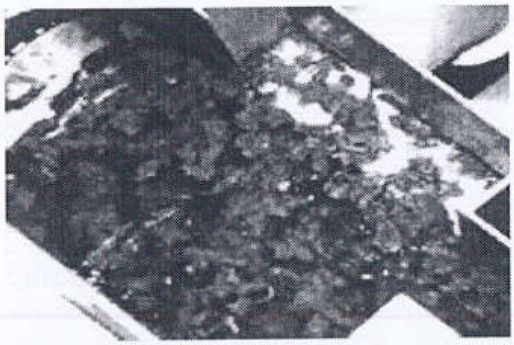

⑨ The flocs flow into the volute body and form mud-cakes which are discharged from the exit by series of disposal. The inner pressure in the volute body becomes larger along with sludge flow and it will take a period of time to form mud-cakes. (About 60 minutes)

newterra ltd.
1291 California Avenue, Brockville, ON K6V 5W3
(800) 420-4056 / www.newterra.com

APPENDIX D

Recommended Spare Parts List

© 2018 by **newterra**, ltd.
All rights reserved. No part of this document may be reproduced or transmitted in any form or by any means, electronic, mechanical, photocopying, recording, or otherwise, without prior written permission of **newterra** ltd.

Spare Parts for newterra System 1905884 - Agnico Eagle Voulte								
Spare = Customer should consider having a replacement component readily available **Spare (Critical) = A spare that is designated as Critical is a component that if it were to fail the system may not be fully functional and will likely result in a full system shutdown.** **Spare (Recommended) = A spare that is designated as Recommended is a component that if it were to fail the system may still be functional but it will most likely not result in a full system shutdown.** **Maintenance = Component has repairable or maintenance parts that would be available from the manufacturer as part of standard O&M practices.** **Consumable = Component is a consumable part or the component contains consumable parts that need to be replaced as part of standard O&M**								
Category	**Spare, Maintenance or Consumable**	**Critical or Recommended Spare**	**Tag**	**Description**	**Extended Description**	**Recommended Qty**	**newterra Part No.**	**Estimated Lead Time in Weeks**
Mechanical	Maintenance	Recommended	P-0902	Kit, valve and diaphragm, PN 99151385		1	9999	3
Mechanical	Spare	Critical	SP-901	Polymer, Dry, MBR Sludge Dewatering (1 year - 0.5 kg/day)	CC - 4509 - 5KG Bag - Vacuum Sealed	37	25728	3
Mechanical	Spare	Recommended	SP-0901	Volute, Dewatering Press,Parts	MYDL 131 Spare Parts Including: Screw Shaft, Material:SS304	1	40618	9
Mechanical	Spare	Recommended	SP-0901	Volute, Dewatering Press,Parts	MYDL 131 Spare Parts Including: Moving Rings, Material:SS304	116	40618	9
Mechanical	Spare	Recommended	SP-0901	Volute, Dewatering Press,Parts	MYDL 131 Spare Parts Including: Gasket, Material:SS304	472	40618	9

Category	Spare, Maintenance or Consumable	Critical or Recommended Spare	Tag	Description	Extended Description	Recommended Qty	newterra Part No.	Estimated Lead Time in Weeks
Mechanical	Spare	Recommended	SP-0901	Volute, Dewatering Press,Parts	MYDL 131 Spare Parts Including: Fixed Rings, Material:SS304	118	40618	9
Mechanical	Spare	Recommended	P-0901	Pump, Part, Moyno, Service kit, 367 Models	Includes: NBR Stator; 340-3506-120 NBR/ Carbon Steel Joint; 320-1749-000 Seal; 320-1750-000 Rotor pins; 320-4439-002 Shaft pin; 320-4439-001	1	21149	3
Mechanical	Spare	Recommended	LSHH-0901 LSHH-0903	Switch, Level, Mech Float, Narrow Angle, N.C., YEL		1	19279	1
Mechanical	Spare	Recommended	LSH-P903 LSL-0902 LSLL-0902	Switch, Level, Mech Float, Narrow Angle, N.O., Blue		1	M1343	1
Mechanical	Spare	Recommended	P-0903	Pump, Sump, Zoeller M53 Automatic Operation		1	17138	2
Mechanical	Spare	Recommended	P-0902	Pump, Grundfos	DDA 60-10 AR-PV/E/C-F-32A7A7BG	1	21485	3
Mechanical	Spare	Recommended	M-0902	Mixer	Delta PG-2, Horsepower = 1/2 hp	1	24628	2
Mechanical	Spare	Recommended	PSL-7911	Switch, Pressure, 1823-00		1	22539	3

Category	Spare, Maintenance or Consumable	Critical or Recommended Spare	Tag	Description	Extended Description	Recommended Qty	newterra Part No.	Estimated Lead Time in Weeks
Mechanical	Spare	Recommended	H-7911/2	Heater, Forced, Air, Ouellet, OAS 10 KW 600V 3ph	C/W Stat, OAS10036T	1	38168	3
Electrical	Spare	Critical		Breaker, 240V 30A 2P DIN Mount, 10k SCCR		1	10246	1
Electrical	Spare	Critical		Breaker, 240V 15A 1P DIN Mount, 10k SCCR		1	10270	1
Electrical	Spare	Critical		Thermal Overload Relay, Class 10 with Single Phase Sens., Trip: 0.4 to 0.63A		1	18976	2
Electrical	Spare	Critical		Thermal Overload Relay, Class 10 with Single Phase Sens., Trip: 0.25 to 0.4A		1	18977	2
Electrical	Spare	Critical		Combination Starter, TeSysU Standard Control Unit 0.35-1.4A, 24VDC coil		1	19503	2
Electrical	Spare	Critical		Relay, SQT RXM4AB1BD, Miniature Relay, 4PDT, 24 VDC, 6A contacts		1	21888	2
Electrical	Spare	Critical		Relay, SQT RXM2AB1BD, Miniature Relay 2PDT 24 VDC		1	22324	2
Electrical	Spare	Critical		Ethernet, 5 port unmanaged ethernet switch		1	25363	2
Electrical	Spare	Critical		Breaker, 240V 1 AMP 1P C		1	27597	2
Electrical	Spare	Critical		Breaker, 240V 2 AMP 1P C		1	27598	2
Electrical	Spare	Critical		Breaker, 240V 4 AMP 1P C		1	27599	2
Electrical	Spare	Critical		Breaker, 240V 6 AMP 1P C		1	27601	2

Category	Spare, Maintenance or Consumable	Critical or Recommended Spare	Tag	Description	Extended Description	Recommended Qty	newterra Part No.	Estimated Lead Time in Weeks
Electrical	Spare	Critical		eWON Cosy 131 LAN/Cell Router, 24VDC Power		1	29140	2
Electrical	Spare	Critical		HMI, Linux Processor, HMIG3U, This linux processor can be used with any of the HMIDT smart displays		1	36124	2
Electrical	Spare	Critical		HMI, 12.1" SCREEN, TOUCH SMART DISPLAY		1	36127	2
Electrical	Spare	Critical		M241 PLC, 24 DI, 16 DO, Ethernet Port, 24Vdc		1	37848	2
Electrical	Spare	Critical		Slim Relay, SPDT, 24VAC/DC Coil		1	40363	2
Electrical	Spare	Critical		UPS, 120V In, 24Vdc/10A Out, DIN Rail Mounted		1	40878	2
Electrical	Spare	Critical		UPS-BAT, 24Vdc, 3.4Ah VRLA Battery Storage Device, DIN Rail Mounted		1	40880	2
Electrical	Spare	Critical		Thermal Overload Relay, Class 10 with Single Phase Sens., Trip: 0.1 to 0.16A		1	42279	2
Electrical	Spare	Critical		Variable Frequency Drive, 600V 3HP		1	42388	2
Electrical	Spare	Critical		Fuse, GLD ATDR15 15A 600V Time Delay		3	E1107	2
Electrical	Spare	Critical		Fuse,GLD ATDR6 6A 600V Time Delay		3	E1123	2
Electrical	Spare	Critical		Fuse, GLD AJT40, 40A 600V Time Delay, Class J		3	E1159	2

Category	Spare, Maintenance or Consumable	Critical or Recommended Spare	Tag	Description	Extended Description	Recommended Qty	newterra Part No.	Estimated Lead Time in Weeks
Electrical	Spare	Recommended		GFCI 15A, 125V Duplex Receptacle		1	10185	1
Electrical	Spare	Recommended		Contactor (TeSys D) Non-Reversing, 9A(AC3) 125A(AC1), 3-Pole (3 NO), 24VDC Coil		1	11216	2
Electrical	Spare	Recommended		Combination Starter, 12A Power Base, 3/7.5/10HP		1	19264	2
Electrical	Spare	Recommended		Combination Starter, 1NO Ready, 1NO Fault Aux. Contact Module		1	19269	2
Electrical	Spare	Recommended		Button, RED LED PILOT LIGHT 24VDC		1	21649	1
Electrical	Spare	Recommended		Button, GREEN LED PILOT LIGHT 24VDC		1	21650	1
Electrical	Spare	Recommended		Relay, SQT RXZE2S114M, Base/Socket for RXM4 4P Relays		1	21889	2
Electrical	Spare	Recommended		Relay, SQT RXZE2S108M, Base/Socket for RXM2 2P Relays		1	22326	2
Electrical	Spare	Recommended		Surge Protector, SQD SDSA3650, 3PH, 600Y/347V, MAX 40kA Surge Suppression		1	22890	2
Electrical	Spare	Recommended		USB-A MALE TO MALE CABLE		1	24550	1
Electrical	Spare	Recommended		Red Industrial Ethernet Cable, RJ45, 3ft, STP		1	27949	1
Electrical	Spare	Recommended		Red Industrial Ethernet Cable, RJ45, 7ft, STP		1	27950	1

Category	Spare, Maintenance or Consumable	Critical or Recommended Spare	Tag	Description	Extended Description	Recommended Qty	newterra Part No.	Estimated Lead Time in Weeks
Electrical	Spare	Recommended		Red Industrial Ethernet Cable, RJ45, 10ft, STP		1	27951	1
Electrical	Spare	Recommended		Light, 4ft Vapourtight, LED, RAB FW4-LED40-B-4K-DIM, 4000K, 40W, 120-277V, Dimmable		1	38205	2
Electrical	Spare	Recommended		Diode Module, 6-250V		1	40620	2
Electrical	Spare	Recommended		Level, Conductivity Relay, 24-240Vac/dc coil		1	42317	2

newterra ltd.
1291 California Avenue, Brockville, ON K6V 5W3
(800) 420-4056 / www.newterra.com

APPENDIX E

Technical Specs and Brochures for Parts and Equipment

© 2019 by **newterra**, ltd.
All rights reserved. No part of this document may be reproduced or transmitted in any form or by any means, electronic, mechanical, photocopying, recording, or otherwise, without prior written permission of **newterra** ltd.

Manual Document List

PMProjNum **1905884**

Agnico Eagle Volute

Part Number / Tag	Part Description		Page
Module: *7900*			
39629	Eye Wash Station, w/ Shower, safety H-5458, 15 gall Constant 15 min flow, Includes: Eyewash & Shower	Manucturer: ManDoc: \\mlee-nas\DATA\Library\Guardian\pl-G1562.	E-4
-			
25747	Blower, Cincinnati LM-4, 4.7" X 2.9" Width Alum whe Arrangement #4, Direct Drive, AMCA B	Manucturer: Cincinatti Fan ManDoc: \\mlee-nas\DATA\Library\Cincinnati Blower\M omm-01-0207_Layout-1.pdf	E-6
B-7911			
38168	Heater, Forced, Air, Ouellet, OAS 10 KW 600V 3ph C/W Stat, OAS10036T	Manucturer: ManDoc: \\mlee-nas\DATA\Library\Ouellet\OAS_Instruc parts list.pdf	E-21
H-7911/2			
11695	Sensor, Flow, 4", DS-300-4 Must be installed in SCH 40 pipe	Manucturer: Dwyer ManDoc: \\nt-data\data\Library\Dwyer\Manuals\Dwyer_ Sensor_Series DS-300.pdf	E-25
PSL-7911			
22539	Switch, Pressure, 1823-00 0.07 to 0.22 "WC Dwyer Nema 1	Manucturer: Dwyer ManDoc: \\nt-data\data\Library\Dwyer\Manuals\Dwyer_Swit	E-29
PSL-7911			
10515	Switch, Temperature Thermostat, CN TF115-001 40F to 110F / 5C to 40C dial	Manucturer: Canarm ManDoc: \\mlee-nas\DATA\Library\peco\nema_4x_pec	E-33
TSLL-7911			
Module: *8202*			
29140	Modem/Router, EC6133D eWON Cosy 131 Ethernet plus with GSM 3G+	Manucturer: ManDoc: \\mlee-nas\DATA\Library\eWON\ewon_cosy1	E-37
MCP			
36127	HMI, 12.1" DISPLAY, HMIDT642 12.1 TOUCH SMART DISPLAY	Manucturer: ManDoc: \\mlee-nas\DATA\Library\Schneider_Electric\Manual manual.pdf	E-67
MCP			
37848	PLC, SQM TM241CE40T 24 DI, 16 DO, Ethernet, 24Vdc	Manucturer: Schneider Electric ManDoc: \\mlee-nas\DATA\Library\Schneider_Electric\ [2014]\M241 Hardware Guide.pdf	E-253
MCP			
Module: *8910*			
42388	Variable Frequency Drive, SQT ATV630U22S6X VFD 600V 3HP Type 1	Manucturer: Schneider Electric ManDoc: S:\Data\Library\Schneider_Electric\ATV630\A amming_Manual_EN_EAV64318_07.pdf	E-563
BLD-7910			

Part Number / Tag	Part Description		Page
Module:	*12900*		
37390	Backflow Preventer, 1/2", 007M1QT	Manucturer:	E-1207
	Watts Series LF007, Double Check Valve Assembly	ManDoc: \\mlee-nas\DATA\Library\Watts\IOM Watts S Double Check Valve Assy.pdf	
Backflow Preven			
26664	Calibration column, 1000mL 0-16gph	Manucturer:	E-1211
	PVC fixed ends	ManDoc: \\mlee-nas\DATA\Library\Koflo\cal column o instructions.pdf	
CC-0901			
M1343	Switch, Level, Mech Float, Narrow Angle, N.O., Blue	Manucturer: Warrick Controls	E-1212
	Tilt Float Level Switch w 40' cable	ManDoc: \\nt-data\data\Library\Gems\Manuals\Series Manual.pdf	
LSH-P903			
19279	Switch, Level, Mech Float, Narrow Angle, N.C., YEL	Manucturer: Warrick Controls	E-1212
	Tilt Float Level Switch w 40' cable	ManDoc: \\mlee-nas\DATA\Library\Gems\Manuals\Se Switch Manual.pdf	
LSHH-0901			
19279	Switch, Level, Mech Float, Narrow Angle, N.C., YEL	Manucturer: Warrick Controls	E-1212
	Tilt Float Level Switch w 40' cable	ManDoc: \\mlee-nas\DATA\Library\Gems\Manuals\Se Switch Manual.pdf	
LSHH-0903			
M1343	Switch, Level, Mech Float, Narrow Angle, N.O., Blue	Manucturer: Warrick Controls	E-1212
	Tilt Float Level Switch w 40' cable	ManDoc: \\nt-data\data\Library\Gems\Manuals\Series Manual.pdf	
LSL-0902			
M1343	Switch, Level, Mech Float, Narrow Angle, N.O., Blue	Manucturer: Warrick Controls	E-1212
	Tilt Float Level Switch w 40' cable	ManDoc: \\nt-data\data\Library\Gems\Manuals\Series Manual.pdf	
LSLL-0902			
24628	Mixer, Misc.	Manucturer:	E-1214
	See Extended Description	ManDoc: S:\Data\Library\Delta_Equipment\Manuals\P	
M-0902	Delta PG-2		
M1255	Pump, Progressive Cavity, Moyno, 33301	Manucturer: Moyno	E-1222
	7gpm@25psi, 1800rpm, NPSH:less than 5 feet	ManDoc: \\mlee-nas\DATA\Library\Moyno\Manuals\Moyno_5 ice_Manual_300_Series_300_model_Motori	
P-0901			
18820	Motor, Teco, 1hp, 1800rpm, 143T	Manucturer:	E-1226
	575V, 3ph, CSA	ManDoc: \\nt-data\data\Library\TECO_Westinghouse\Mar Westingshouse_Motor (Three Phase Inducti	
P-0901			
21485	Pump, Grundfos, Misc	Manucturer:	E1260
	See Description	ManDoc:	
P-0902	DDA 60-10 AR-PV/E/C-F-32A7A7BG		

Part Number / Tag	Part Description		Page
17138	Pump, Sump, Zoeller M53 Automatic Operation	Manucturer: Zoller Pump Co.	
	110/115V 20' max head 40gpm max	ManDoc: \\NT-DATA\shares\data\Library\Zoeller_Pump_Co er 50 Series Manual.pdf	E-1314
P-0903			
21299	Valve, Relief, Back Pressure, Kunkle, 1", Liquid Servi	Manucturer: Kunkle	
	Bronze, Teflon O-Ring, Handwheel adjustment	ManDoc: \\nt-data\data\Library\Kunkle\Manuals\KUKM	E-1322
PRV-0901			
40616	Volute, Dewatering Press, MYDL-131	Manucturer:	
	Complete without Control Panel	ManDoc: \\mlee-nas\DATA\Library\BOEEP Volute\myd 03152019142502.pdf	E-1354
SLD-0901			

Guardian

Operation & Maintenance Guide

☐ **G1562** Pressurized 15 Gallon Portable Eyewash with Drench Hose
☐ **G1561** Pressurized 15 Gallon Portable Eyewash

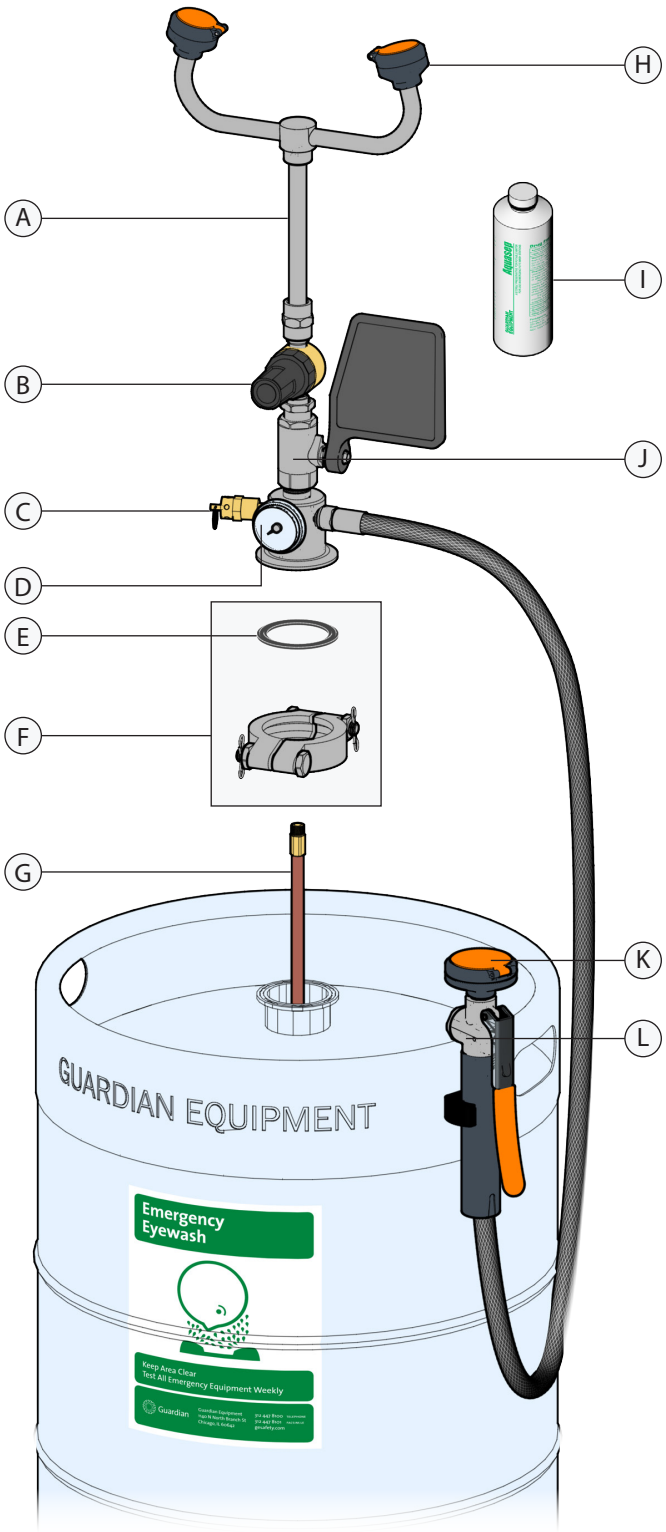

General Notes

The G1562 pressurized portable self-contained eyewash is designed to supply 0.65 GPM of water for 15 minutes in environments where a permanent water supply may not be available. Note that, under ANSI A358.1-2014, drench hose units supplement, but do not replace other types of emergency equipment.

Unit should be placed in a location where the top of the sprayheads are not less than 33 inches and no greater that 45 inches above the surface on which the user stands. It shall also be positioned so that there are no obstructions on either side of the unit. Unit should be located on a surface which is flat, dry and out of direct sunlight.

USE OF THIS UNIT FOR ANY OTHER PURPOSE NOT INTENDED BY THE MANUFACTURER WILL VOID THE WARRANTY.

Safety and Maintenance Instructions

Read and follow all instructions for this eyewash station. Failure to do so may result in serious eye damage and vision loss.

Pressure relief valve should be checked to make sure it is working properly.

It is recommended that the eyewash be inspected weekly for inadequate water level. Inspections which give evidence of any particulation or discoloration suggest the water be replaced immediately.

Item	Part Number	Description
A	**AP400-017R**	Upper Eyewash Assembly With Fill Tube (Drench Hose And Clamp Sold Seperately)
B	**BI366-1-125**	Pressure Regulator
C	**400-017-3**	Pressure Relief Valve
D	**400-004-2**	Pressure Gauge
E	**400-017-5R**	Tank Gasket (Pkg of 6)
F	**AP400-017-4R**	Clamp, Bolts, Clips and Tank Gasket
G	**AP400-017-2**	Fill Tube
H	**AP470-001ABS**	GS-Plus™ Spray Head Assembly
I	**G1540BA**	Bacteriostatic Additive
J	**AP600-101V**	1/2" Ips Stay-Open Ball Valve Assembly
K	**G5010T2**	Drench Hose Attachment Assembly
L	**RK600-240**	Drench Hose Valve Repair Kit

Guardian Equipment
1140 N North Branch St.
Chicago, IL 60642

312 447 8100 telephone
312 447 8101 facsimile
gesafety.com

☐ **G1562** Pressurized 15 Gallon Portable Eyewash with Drench Hose
☐ **G1561** Pressurized 15 Gallon Portable Eyewash

Assembly and Filling Instructions

1. ***IMPORTANT:*** depressurize tank by activating pressure relief valve on the outlet stem assembly.
2. Loosen and remove (2) bolts, nuts, clips, and the clamp from the tank, raise the eyewash assembly from the tank.
3. Fill tank with 10 gallons of clear, clean potable water only. Then add entire bottle of bacteriostatic additive included with the unit. ***DO NOT OVERFILL!***
4. Replace eyewash assembly ensuring that the eyewash assembly flag handle and the eyewash sign on the vessel are facing the same direction. Reclamp securely in place by tigthing the nuts. Replace clips.
5. Using the Schrader air intake valve, pressurize unit to 80 PSI. Be sure to use a clean air source. ***DO NOT USE CO^2 OR ANY OTHER HIGH PRESSURE GAS! DO NOT CONNECT DIRECTLY TO ANY EXTERNAL AIR OR GAS SOURCE!***
6. Run unit momentarily to purge air and any contaminants from system.

Note: water should be drained and replaced with fresh water and one bottle of bacteriostatic additive (p/n G1540BA) at least once every six months.

CAUTION: KEEP UNIT AWAY FROM HEAT!

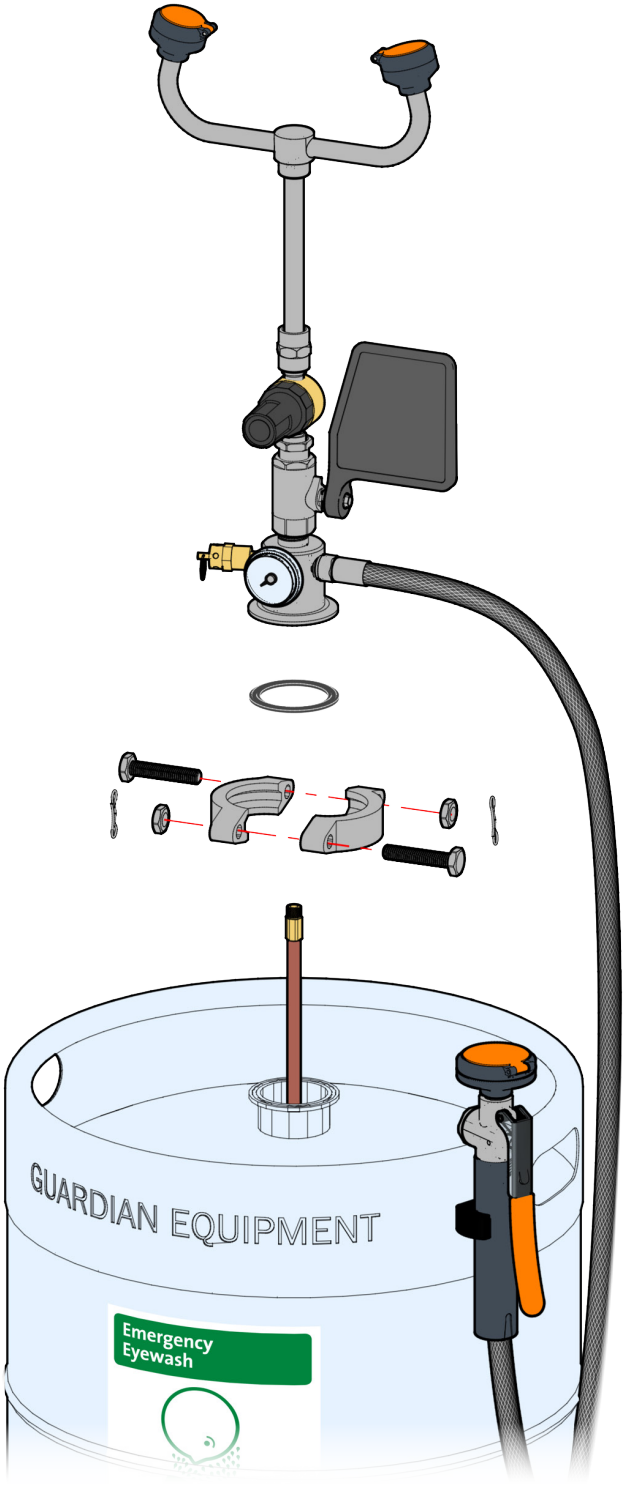

Guardian Equipment
1140 N North Branch St.
Chicago, IL 60642

312 447 8100 telephone
312 447 8101 facsimile
gesafety.com

B-7911 - Blower, Cincinnati LM-4, 4.7" X 2.9" Width Alum wheel

cincinnati fan

Form: OMM-01-0509
Effective: 5/4/09
Supersedes OMM-01-0207
Part No.: 01218

Installation, Safety, Operation & Maintenance Instructions And Parts List

For Models PB, PBS, SPB, LM and LMF.

Arrangement 4 Blowers

NOTE

READ ENTIRE MANUAL, INCLUDING "SECTION IV. INITIAL UNIT STARTUP" BEFORE ATTEMPTING TO INSTALL AND OPERATE THIS EQUIPMENT.

BLOWER SPECIFICATIONS

BLOWER SERIAL NUMBER: _____ **MFG. DATE:** _____

NOTE: The serial number above is a required reference for any assistance. It is stamped on the blower nameplate.

BLOWER SPECIFICATIONS:

Model: _____ **Arrangement:** _____ **Rotation:** _____ **Discharge:** _____

Nominal Inlet Size: _____ (in Inches) **Wheel Size and Type:** _____

BLOWER PERFORMANCE DATA: (If entered on order)

CFM: _____ **SP:** _____ (Inches of Water Gauge) **Motor BHP:** _____

Density: _____ **Altitude:** _____ (Ft. above S.L.) **Airstream Temperature:** _____**°F.**

Fan RPM: _____ **Maximum Safe Fan RPM:** _____ **DO NOT EXCEED THIS RPM**

MOTOR DATA: (This section is completed only if the motor was supplied by Cincinnati Fan)

HP: _____ **RPM:** _____ **Voltage:** _____ **Phase:**_____

Hz: _____ **Frame Size:** _____ **Enclosure:** _____ **Efficiency:** _____

IF Motor is EXP, Class(es) & Group(s) are:_____

Manufacturers Model Number: _____ **CFV Part Number:** _____

ATTENTION: RECEIVING DEPARTMENT

All Cincinnati Fan products are packaged to minimize any damage during shipment. The freight carrier is responsible for delivering all items in their original condition as received from Cincinnati Fan. The individual receiving this equipment is responsible for inspecting this unit for any obvious or concealed damage. If any damage is found, it should be noted on the bill of lading before the freight is accepted and the receiver must file a claim with the freight carrier.

LONG TERM STORAGE NOTICE

If this blower will NOT be installed and put into operation within 30 days, refer to the "Long Term Storage Instructions" on pages 12 and 13. Failure to follow all applicable long term storage instructions, will void your warranty. This blower should be stored indoors in a clean, dry location.

⚠ DANGER				
Hazardous voltage can cause electrical shock and death.	High speed rotating equipment can cause severe personal injury.	Lock out/Tag out to prevent personal injury BEFORE starting ANY service or inspection.	Avoid injury. NEVER operate without ALL required safety guards in place.	Avoid injury. You MUST read and understand all instructions in this manual BEFORE installing.

TABLE OF CONTENTS

I. GENERAL
- A. Unpacking and Handling 2
- B. Safety Accessories & Instructions.....2-3

II. INSTALLATION
- A. Vibration.....3
- B. Mounting Methods.....3-4
- C. Duct Work Connections.....4
- D. Safety Guards.....4
- E. Dampers and Valves.....4
- F. Set Screw & Taper-lock Bushing Torque Values 5

III. ELECTRICAL
- A. Disconnect Switches 5
- B. Motors.....5-6
- C. Maximum Blower Speed.....6

IV. INITIAL UNIT STARTUP
- A. Pre-Startup & Post-Startup Checks.....7
- B. Vibration.....8-9

V. ROUTINE INSPECTION & MAINTENANCE.....9
- A. Hardware 10
- B. Motor Bearing Lubrication 10
- C. Wheel Balance 10
- D. Vibration.....10
- E. Dampers and Valves.....10
- F. Safety Equipment or Accessories 10-11

VI. ORDERING PARTS.....11

VII. TROUBLESHOOTING.....11-12

VIII. LONG TERM STORAGE.....12-13

IX. WARRANTY, LIABILITY & RETURNS.....14

X. PARTS DRAWING.....15

I. GENERAL

A. Unpacking:

Be careful not to damage or deform any parts of the blower when removing it from the packaging container. **All the packaging material should be kept in the event the blower needs to be returned.**

Handling:

Handling of the blower should be performed by trained personnel and be consistent with all safe handling practices. Verify that all lifting equipment is in good operating condition and has the proper lifting capacity. The blower should be lifted using well-padded chains, cables or lifting straps with spreader bars. Some blower models have lifting eye locations provided in the blower base. **NEVER lift the blower by an inlet or discharge flange, motor shaft, motor eye bolt, or any other part of the blower assembly that could cause distortion of the blower assembly.**

B. Safety Instructions & Accessories:

1. **Safety Instructions:**
   All installers, operators and maintenance personnel should read AMCA Publication 410-96, **"Recommended Safety Practices for Users and Installers of Industrial and Commercial Fans".** This manual is included with the blower. Additional copies can be requested by writing us at Cincinnati Fan, 7697 Snider Rd., Mason, OH 45040-9135
2. **Sound:**
   Some blowers can generate sound that could be hazardous to personnel. It is the responsibility of the user to measure the sound levels of the blower and/or system, determine the degree of personnel exposure, and comply with all applicable safety laws and requirements to protect personnel from excessive noise.

3. Air Pressure and Suction:

In addition to the normal dangers of rotating machinery, the blower can present additional hazards from the suction or pressure created at the blower inlet or discharge. Suction at the blower inlet can draw materials into the blower where they become high velocity projectiles at the discharge and cause severe personal injury or death. It can also be extremely dangerous to persons in close proximity to the inlet or discharge as the forces involved can overcome the strength of most individuals.

⚠ WARNING

NEVER OPERATE A BLOWER WITH A NON-DUCTED INLET AND/OR DISCHARGE. IF THE BLOWER INLET AND/OR DISCHARGE IS NON-DUCTED, IT IS THE USERS RESPONSIBILITY TO INSTALL AN INLET AND/OR DISCHARGE GUARD.

4. Temperature:

Many blowers, blower components and all motors operate at temperatures that could burn someone if they come in contact with them. If this potential hazard could exist in your installation, steps must be taken by the user to protect anyone from coming in contact with this equipment.

5. Spark Resistance; (Per AMCA Standard 99-0401-86 and ISO 13499)

⚠ DANGER

NO GUARANTEE OF ANY LEVEL OF SPARK RESISTANCE IS IMPLIED BY SPARK RESISTANT CONSTRUCTION. IT HAS BEEN DEMONSTRATED THAT ALUMINUM IMPELLERS RUBBING ON RUSTY STEEL CAN CAUSE HIGH INTENSITY SPARKS. AIR STREAM MATERIAL AND DEBRIS OR OTHER SYSTEM FACTORS CAN ALSO CAUSE SPARKS.

6. Safety Accessories;

Guards:

All moving parts must be guarded to protect personnel. Safety requirements can vary, so the number and types of guards required to meet company, local, state and OSHA regulations must be determined and specified by the actual user or operator of the equipment.

NEVER start any blower without having all required safety guards properly installed. All blowers should be checked on a regular schedule, for missing or damaged guards. If any required guards are found to be missing or defective, the power to the blower should be immediately turned off and locked out in accordance with OSHA regulations. Power to the blower should NOT be tuned back on until the required guards have been repaired or replaced.

This blower can become dangerous due to a potential “windmill” effect, even though all electrical power has been turned off or disconnected. The blower wheel should be **carefully** secured to prevent any rotational turning ***BEFORE*** working on any parts of the blower/motor assembly that could move.

7. Access or Inspection Doors:

⚠ DANGER

NEVER OPEN ANY ACCESS OR INSPECTION DOORS WHILE THE BLOWER IS OPERATING. SERIOUS INJURY OR DEATH COULD RESULT FROM THE AFFECTS OF AIR PRESSURE, AIR SUCTION OR MATERIAL THAT IS BEING CONVEYED. DISCONNECT OR LOCK OUT POWER TO THE BLOWER AND LET THE BLOWER WHEEL COME TO A COMPLETE STOP *BEFORE* OPENING ANY TYPE OF ACCESS OR INSPECTION DOOR.

II. INSTALLATION

A. Vibration:

Before any mounting method is selected, the user should be aware of the effects vibration will have on the blower, motor and other parts. Improper blower installation can cause excessive vibration causing premature wheel and/or motor bearing failure, that is not covered under warranty. Vibration eliminator pads, springs or bases should be properly installed to prevent any blower vibration from transmitting to the foundation, support structure or ducting.

⚠ WARNING

SHUT THE BLOWER DOWN IMMEDIATELY IF THERE IS ANY SUDDEN INCREASE IN VIBRATION.

B. Mounting Methods:

1. Floor Mounted Units;

Centrifugal blowers should be mounted on a flat, level, concrete foundation weighing 2-3 times the weight of the complete blower/motor assembly. It is recommended that the foundation be at least 6 inches larger than the base of the blower. The foundation should include anchor bolts such as shown in **Fig. 1** on page 4. Place the blower over the anchor bolts and shim under each bolt until the blower is level. After shimming, flat washers, lock washers and lock nuts should be tightened at each anchor bolt. Any gaps between the blower base and the foundation should be grouted. If the blower will be sitting on some type of vibration pads or mounts, follow the recommended mounting procedures supplied with the vibration elimination equipment.

Fig. 1

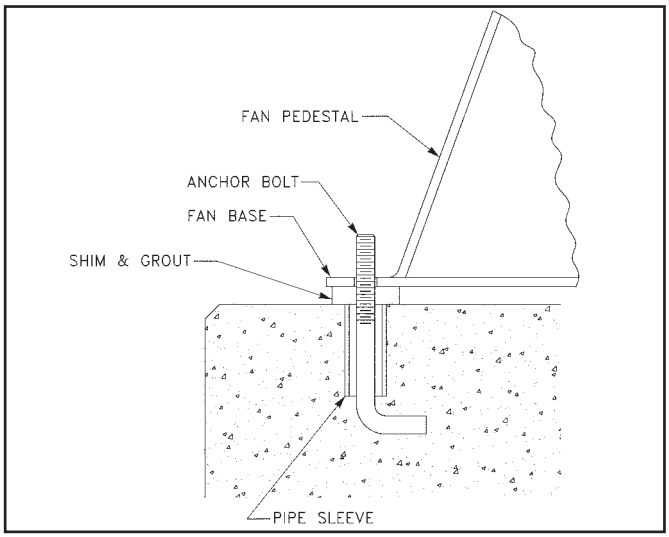

2. Elevated Units;

Improper mounting of elevated blowers can cause vibration problems. The structure that the blower/motor assembly will be mounted on must be strong enough to support at least 3 times the weight of the entire blower/motor assembly. **An insufficient support will cause excessive vibration and lead to premature wheel and/or motor bearing failure**. Bracing of the support structure must be sufficient enough to prevent any side sway. The entire structure should be welded at all connection joints to maintain constant alignment of the platform.

⚠ DANGER

THE IMPROPER DESIGN OF AN ELEVATED PLATFORM STRUCTURE COULD RESULT IN A RESONANT CONDITION, AND CONSEQUENTLY, CAUSE A LIFE THREATENING, CATASTROPHIC, STRUCTURAL FAILURE.

C. Duct Work Connections:

All duct connections to the blower should include flexible connectors between the ducting and the blower inlet and/or discharge. This will eliminate distortion, noise and vibration from transmitting to the duct and building. The connectors should be selected to handle the operating conditions for air volume and pressure that the blower will produce. **All ducting or accessories, added by the user, should be independently supported. DO NOT use the blower/motor assembly to support any additional weight.** Inlet and/or discharge duct elbows should be located a minimum of 2 blower wheel diameters from the blower. Any duct elbows located closer than 2 wheel diameters to the blower inlet or discharge **WILL** reduce the air performance and blower efficiency. Any duct elbows near the blower discharge should be in the **same rotational direction** as the **blower rotation**.

Non-Ducted Blower Inlet:

Any blower with no ducting on the inlet **must** have an inlet guard. The blower should be located so the blower inlet is, at least, 1 wheel diameter away from any wall or bulkhead to eliminate a reduction in air flow.

Non-Ducted Blower Discharge:

Any blower with no ducting on the discharge **must** have a discharge guard.

D. Safety Guards:

Cincinnati Fan offers guards, as optional, to keep your blower in compliance with OSHA safety regulations. These include inlet or discharge guards. Any blowers built with high temperature construction, a “heat slinger guard” is standard. It is the responsibility of the user to make sure this blower meets all local, state and OSHA safety regulations. If you have a specific guard requirement not covered by OSHA, please contact the local Cincinnati Fan sales office for assistance.

E. Dampers and Valves: (Airflow control devices)

If the blower is supplied with any type of air flow control device, it should be closed before initial start-up of the blower to minimize overloading of the motor. Any airflow control device, with bearings, should be maintained in accordance with the manufacturers instructions. Any air flow control device, with an automatic control mechanism, should be adjusted per the manufacturers recommendations.

F. Set Screw and Taper-lock Bushing Torque Values:

All blower wheel set screws are tightened to the proper torque prior to shipment. Some wheels may have taper-lock hubs and split, taper-lock bushings to secure the wheel to the motor shaft.

NOTE: Check all set screw or taper-lock bushing torques. Forces encountered during shipment, handling, rigging and temperature can affect factory settings. For correct torque values, see **Tables 1** and **2** below.

Table 1

SET SCREW TORQUE VALUES		
Diameter & Number of Treads/Inch	**Hex Wrence Size (Across Flats)**	**Required Torque (Inch Pounds)**
1/4-20	1/8"	65
5/16-18	5/32"	165
3/8-16	3/16"	228
7/16-14	7/32"	348
1/2-13	1/4"	504
5/8-11	5/16"	1104

Table 2

TORQUE VALUES FOR TAPER-LOCK BUSHINGS	
Taper-lock Bushing Size	**Required Torque (Inch Pounds)**
H	95
B	192
P	192
Q	350
R	350

⚠ CAUTION

Set screws should NEVER be used more than once. If the set screws are loosened, they MUST be replaced. Use only knurled, cup-point, set screws with a nylon locking patch.

III. ELECTRICAL

A. Disconnect Switches:

All blower motors should have an independent disconnect switch located in close visual proximity to turn off the electrical service to the blower motor. **Disconnects must be locked out in accordance with OSHA "lock out-tag out" procedures any time inspection or maintenance is being performed on the blower and/or motor assembly. The "lock out-tag out" procedure should be performed by a licensed electrician or authorized personnel.** All disconnects should be sized in accordance with the latest NEC codes (National Electric Codes) and any local codes and should be installed only by a licensed electrician. "Slow blow" or "time delay" fuses or breakers should be used since the initial start-up time for the blower motor, although rare, can be up to 10 seconds.

B. Motors:

⚠ DANGER

ALL WIRING CONNECTIONS, INSPECTION AND MAINTENANCE OF ANY MOTOR MUST BE PERFORMED BY A LICENSED ELECTRICIAN IN ACCORDANCE WITH THE MOTOR MANUFACTURERS RECOMMENDATIONS, ALL ELECTRICAL CODES AND OSHA REGULATIONS. FAILURE TO PROPERLY INSTALL, MAKE WIRING CONNECTIONS, INSPECT OR PERFORM ANY MAINTENANCE TO A MOTOR CAN RESULT IN MOTOR FAILURE, PROPERTY DAMAGE, EXPLOSION, ELECTRICAL SHOCK AND DEATH.

1. **DO NOT connect or operate a motor without reading the motor manufacturers instructions supplied with the blower.** The basic principle of motor maintenance is: **KEEP THE MOTOR CLEAN AND DRY.** This requires periodic inspections of the motor. The frequency of the inspections depends on the type of motor, the service and environment it will be subjected to and the motor manufacturers instructions.
2. **Cleaning:** Cleaning should be limited to exterior surfaces only. **Follow motor manufacturers cleaning instructions.**
3. **Lubrication:** Most small motors have sealed bearings that are permanently lubricated for the life of the motor. Some larger motors have grease plugs that should be replaced with grease fittings to perform re-lubrication. These motors, or any motor with grease fittings, should be lubricated in accordance with the motor manufacturers recommendations. Lubrication frequency depends on the motor horsepower, speed and service. **BE SURE** you use compatible grease and **DO NOT** over grease.
4. **Location:** If the motor will be outside and subjected to the weather, it is recommended that a weather cover be installed to keep rain and snow off of the motor. No motors are guaranteed to be "watertight". Be careful to allow enough openings between the motor and the motor cover to let the motor "breath". If the back end of the motor is covered, the cover should be no closer than 3" to the back of the motor for proper ventilation.

5. **Wiring Connections:** All wiring connections should be made for the proper voltage and phase as shown on the motor nameplate. Connections should follow the motor manufacturers recommendations as shown on the wiring schematic. This wiring diagram will be located on the outside of the motor, inside of the motor conduit box or on the motor nameplate. **Reversing some wires might be necessary to get the correct blower rotation.**
6. **Motors with Thermal Overload Protection:** If a motor is equipped with thermal overloads, the thermal overload must be wired per the wiring schematic to be operable. ***There are 3 types of thermal overloads:***
   a. **Automatic:** These will automatically shut the motor down if the internal temperature exceeds the design limits.

⚠ DANGER

MAKE SURE YOU LOCK OUT THE POWER TO THE MOTOR BEFORE INSPECTING ANY MOTOR WITH AUTOMATIC THERMALS. WHEN THE THERMALS COOL DOWN, THEY WILL ALLOW THE MOTOR TO AUTOMATICALLY START UP AGAIN, UNLESS YOU HAVE LOCKED OUT THE POWER TO THE MOTOR.

   b. **Manual:** These motors will have a button on them. If the motor overheats, it will shut down. After you have inspected the motor and eliminated the over heating problem, you will need to "reset" it by pushing the button. **You should still lock out the power BEFORE inspecting the motor.**
   c. **Thermostats:** This type of thermal is a temperature sensing device **ONLY**. If the motor overheats, the thermostats will open or close (depending on the type) and send a **"signal"** to the electrical box. ***THEY WILL NOT TURN THE MOTOR OFF.*** **These are pilot circuit devices that must be connected to the magnetic starter circuit.**

7. **EXPLOSION PROOF Motors:** No motor is explosion proof. Explosion proof (EXP) motors are designed so if there is an explosion **WITHIN** the motor, the explosion will be **CONTAINED INSIDE** the motor and not allowed to get out to the atmosphere. All explosion proof motors must be selected based on the atmosphere and/or the environment the motor will be operating in. Explosion proof motors are designed, rated, and labeled for their operating conditions based on Classes, Groups and "T" Codes. **The Class, Group and "T" Code of an EXP motor MUST be selected based on the atmosphere and/or environmental conditions the motor will be operating in. Consult the NEC (National Electric Code) and the NFPA (National Fire Protection Association) for the proper EXP motor Class, Group and "T" Code required for your specific application and location.**

⚠ DANGER

IF AN EXPLOSION PROOF MOTOR IS USED IN AN AREA CONTAINING VOLITILE LIQUIDS, GASES, FUMES OR DUST FOR WHICH THE MOTOR WAS NOT DESIGNED TO OPERATE IN, AN EXPLOSION AND/OR FIRE CAN OCCUR.

NOTICE:

   a. **All EXP motors have some type of thermal overload as required by UL (Underwriters Laboratories). Refer to all of Section 6 above.**
   b. **All EXP motors are required to have the UL (Underwriters Laboratories) and CSA (Canadian Standards Association) listing numbers on the motor name plate or on a separate plate attached to the motor. The Class, Group and "T" Code the motor is designed for must also be listed.**

8. **Normal Motor Operating Temperatures:**
   Using your hand to test the normal running temperature of a motor can be a very painful experience;
   The normal operating temperature of a fully loaded, open type, electric motor operating in a 70°F. (21° C.) ambient temperature is 174°F. (79° C.)

C. Maximum Blower Speed and Motor Speed Controllers:

If you will be using any type of motor speed controller with this blower, **DO NOT** exceed the **maximum safe blower speed**. Installing and using a speed control device requires special training and certification as required by the speed control manufacturer. See the manufacturers instructions for proper use, installation and wiring connections for the maximum speed settings. It may also be necessary to "block out" some speeds to eliminate a resonant vibration problem. The maximum safe blower speed is shown on the data sheet shipped with the blower. If you have lost the data sheet, contact Cincinnati Fan or our sales office for your area. You must have the serial number from the **blower** name plate for us to determine the maximum safe blower speed. Cincinnati Fan will only extend the motor manufacturers warranty, when used with a speed controlling device, if the motor has the words **"Inverter Duty"** marked on the motor name plate. If the motor does not have **"Inverter Duty"** marked on the motor name plate, and you have a motor failure, you will be required to contact the motor manufacturer for any service or warranty claims.

IV. INITIAL UNIT STARTUP

NOTICE: Failure to complete and document all the following pre-startup and both post-startup checks, listed in sections A (below) and B on page 8, could void all warranties.

A. Pre-Startup & Post-Startup Checks: (Check blocks as each step is completed. Retain this for your records.)

A1. Pre-Startup Checks Completed By: _____ DATE: _____

A2. 8 Hour, Post-Startup Checks Completed By: _____ DATE: _____

A3. 3 Day, Post-Startup Checks Completed By: _____ DATE: _____

MAKE SURE POWER TO THE MOTOR IS LOCKED OUT BEFORE STARTING PRE-STARTUP OR POST-STARTUP CHECKS.

1. ☐☐☐ If possible, *CAREFULLY* spin the blower wheel by hand to ensure it rotates freely and no rubbing or clicking noise is heard.
2. ☐☐☐ Check all blower, foundation and duct work hardware to make sure it is tight.
3. ☐☐☐ Check all blower wheel set screws to make sure they are tight per **Table 1** on page 5.
4. ☐☐☐ If the wheel has a taper-lock bushing, make sure the bolts are tightened per **Table 2** on page 5.
5. ☐☐☐ Make certain there is no foreign material in the blower or duct work that can become a projectile.
6. ☐☐☐ Make sure any inspection doors in the duct work are securely bolted or locked.
7. ☐☐☐ Ensure all electrical power components are properly sized and matched for your electrical system.
8. ☐☐☐ Check that all required guards are properly secured.
9. ☐☐☐ Any dampers should be fully opened and closed to make sure there is no binding or interference.
10. ☐☐☐ If your blower is mounted on an elevated support structure, make sure the structure is welded at all the joint connections and the structure is properly braced to prevent "side sway".
11. ☐☐☐ Close any dampers to minimize load on motor. Especially on blowers with high temperature construction. **Never** subject a "cold" blower to a "hot" gas stream. If the blower will be handling "hot gases" greater than 150°F (65°C) it is imperative that the blower be subjected to a gradual rate of temperature increase, not to exceed 15°F/minute (8°C/minute). The same temperature limits are also important when the blower is experiencing a drop in temperature until the temperature drops down to 150°F (65°C). Only, when the entire blower has reached an equilibrium temperature of 150°F (65°C), or less, should the power be turned off.
12. ☐☐☐ Make sure the power source connections to the blower motor are per the motor manufacturers instructions.
13. ☐☐☐ Make sure the blower wheel is stationary prior to startup. **Starting a blower with a wheel that is rotating backwards can cause wheel damage.**
14. ☐☐☐ Apply power to the blower motor momentarily (i.e. "bump start") to check for proper blower wheel rotation. If the blower is rotating in the wrong direction, reconnect the motor leads per the motor manufacturers wiring schematic. **Blower rotation is determined by viewing the blower from the motor side of the blower, NOT from the inlet side**. After reconnecting the leads, repeat this step. **See Fig. 2 below.**

Fig. 2

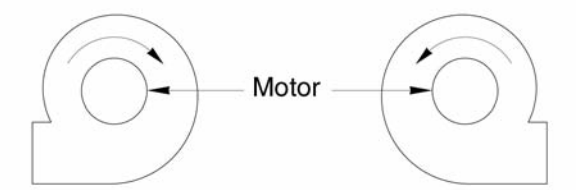

Clockwise (CW) Rotation **Counter-Clockwise (CCW) Rotation**

15. ☐☐☐ Apply power to the blower motor and let it come up to full speed. **Turn off the power.** Look and listen for any unusual noise or mechanical abnormality while the blower wheel is still spinning. If any are noticed, lock out the power, wait for the blower wheel to come to a complete stop, locate the cause and correct it.
16. ☐☐☐ Unlock power and start the blower.
17. ☐☐☐ Measure, record and keep the following motor data for future reference and comparison:
(Single phase motors will only have L1 and L2 leads)

Amperage draw on each motor lead: L1 _____ L2 _____ L3 _____
(Running amps **SHOULD NOT** exceed the motor nameplate amps for the voltage being operated on)

Voltage coming to motor leads: L1_____ L2_____ L3_____
(Should be about the same input voltage on all leads)

B. Vibration:

The blower was balanced at the factory to comply with ANSI/AMCA Standard 204-05, Category BV-2. However, rough handling in shipment and/or erection, weak and/or non-rigid foundations, and misalignment may cause a vibration problem after installation. After installation, the vibration levels should be checked by personnel experienced with vibration analysis and vibration analysis equipment.

NOTE:

The blower SHOULD NOT be operated if the vibration velocity of the fan exceeds 0.50 inches per second, filter out, if the blower is rigidly mounted. If the blower is mounted on isolators or on an isolator base, it SHOULD NOT be operated if the vibration velocity of the blower exceeds 0.75 inches per second, filter out.

Vibration readings for direct driven blowers should be taken on the motor at the top, sides and end as per **Fig. 3** below. After you have taken your vibration readings, write them down in the spaces below and keep for future comparison.

⚠ DANGER

If the blower is going to be conveying material, it is the users responsibility to periodically turn the blower off and lock out the power. The blower wheel should then be checked for material build-up and/or erosion. If material has built up on any parts of the wheel, it MUST be removed and cleaned before it is put back into service. If any parts of the wheel have been eroded, the wheel MUST be replaced. Failure to perform this inspection can cause excessive vibration that will damage the blower and/or motor bearings. When vibration becomes excessive, it will lead to complete blower failure that could cause property damage, severe personal injury and death. The user must determine the frequency of this inspection based on the actual circumstances of their operation, BUT checking the vibration readings should NEVER exceed a 12 month period. For the AMCA/ANSI standard for vibration limits, see Fig. 4 on page 9.

Fig. 3

VIBRATION METER PROBE POSITIONS

For Arrangement 4 Blowers

	1	2	3	4	5
A					
B					
C					

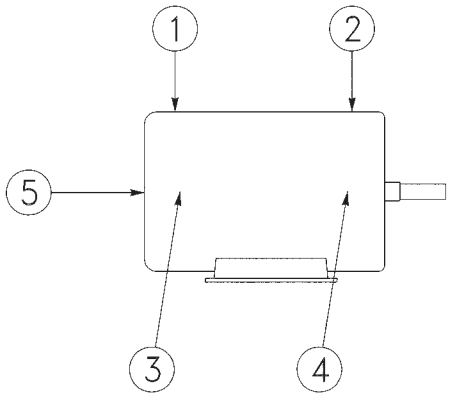

A Pre-Startup ..... Readings taken by: _____ **Date:** _____

B 8 Hour Post-Startup ..... Readings taken by: _____ **Date:** _____

C 3 Day Post-Startup ..... Readings taken by: _____ **Date:** _____

Fig. 4 Vibration Severity Chart

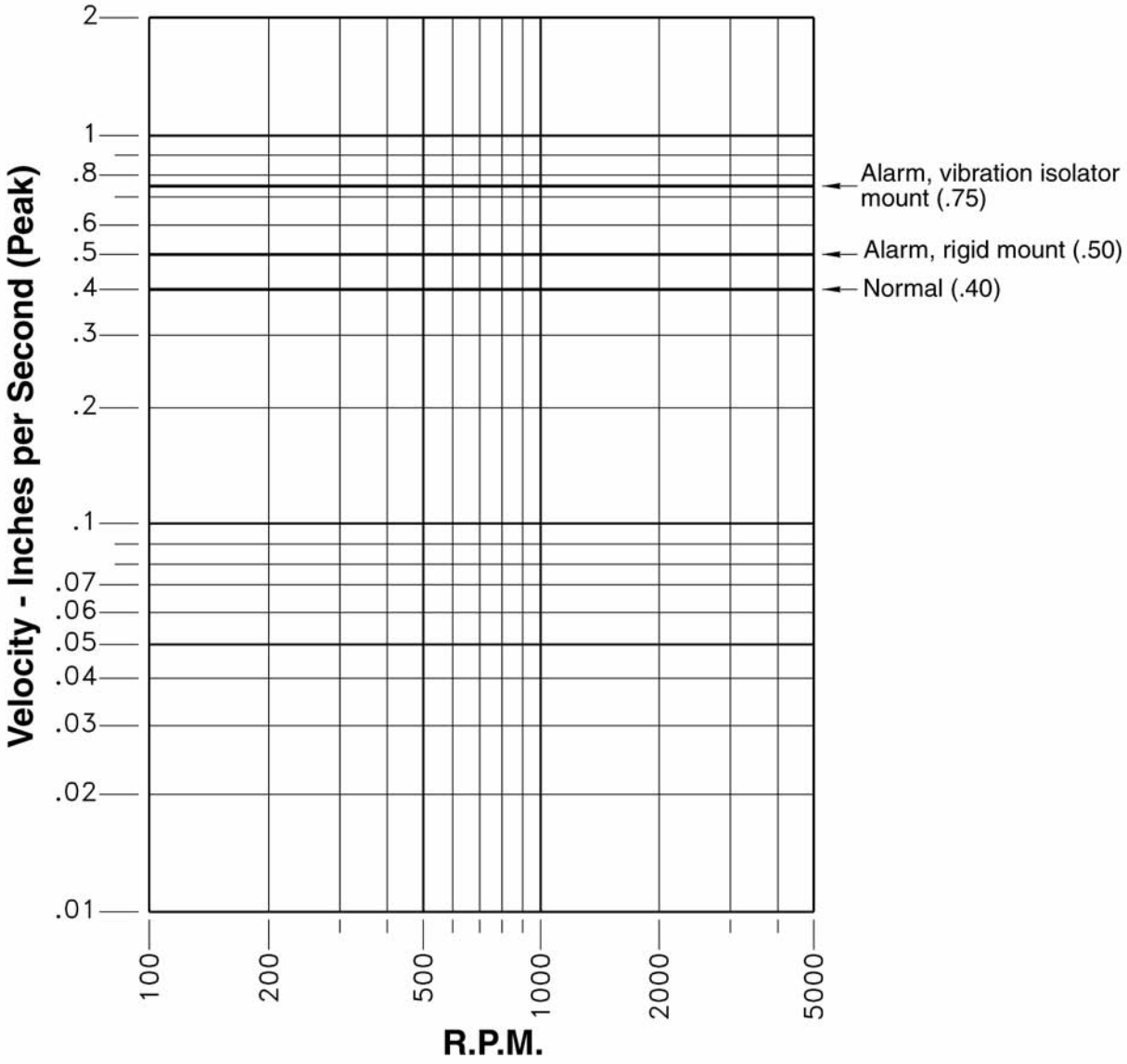

V. ROUTINE INSPECTION & MAINTENANCE

Periodic inspection of all the blower parts is the key to good maintenance and trouble-free operation. The frequency of inspections must be determined by the user and is dependent upon the severity of the application. **BUT,** it should **NEVER** exceed a 12 month period. The user should prepare an inspection and maintenance schedule and make sure it is adhered to.

⚠ WARNING

BEFORE STARTING ANY INSPECTION OR MAINTENANCE, BE SURE BLOWER IS TURNED OFF, POWER IS LOCKED OUT AND THE BLOWER WHEEL HAS BEEN CAREFULLY SECURED TO PREVENT WIND MILLING. IF THE OPERATING CONDITIONS OF THE BLOWER ARE TO BE CHANGED (SPEED, PRESSURE, TEMPERATURE, ETC.) CONSULT CINCINNATI FAN, OR OUR SALES OFFICE FOR YOUR TERRITORY, TO DETERMINE IF THE UNIT WILL OPERATE SAFELY AT THE NEW CONDITIONS.

A. Hardware:

All blower and foundation hardware should be checked to make sure it is tight. Wheel set screws or taper-lock bushings should be tightened to the torque values shown in **Tables 1 and 2** on page 5.

NOTE: If any set screws have come loose, they must be thrown away and replaced. **NEVER** use set screws more than once. **Replace with knurled, cup-point set screws with a nylon locking patch.**

B. Motor Bearing Lubrication:

1. Motor Bearings:

Most smaller motors have sealed bearings that never require re-lubrication for the life of the motor. For any motors with grease fittings, consult the motor manufacturers recommendations with reference to the lubrication frequency and the type of grease that should be used.

DO NOT over grease the motor bearings. Generally, 1-2 shots should be enough. Use a hand operated grease gun at no more than 40 PSI. ***IF POSSIBLE, CAREFULLY*** **lubricate the motor bearings while the motor is running.**

C. Wheel Balance:

All blower wheels are balanced at the factory. It is not uncommon that additional "trim balancing" is required after the blower is assembled. Trim balancing of the blower assembly, in the field, is typically always necessary for all replacement wheels. **After any wheel is installed, the final balance of the entire blower assembly should be checked.** Refer to Section B on page 8 and Fig. 4 on page 9. Air stream material or chemicals can cause abrasion or corrosion of the blower parts. This wear is generally uneven and, over time, will lead to the wheel becoming unbalanced, causing excessive vibration. When that happens, the wheel must be rebalanced or replaced. The other air stream components should also be inspected for wear or structural damage and cleaned or replaced if necessary. **After cleaning any blower wheel, it should be balanced and then "trim balanced" on the motor shaft.**

There are three ways to balance a blower wheel:

1. **Add balancing weights for fabricated aluminum, steel or stainless steel wheels:**
   Balance weights should be rigidly attached to the wheel at a location that will not interfere with the blower housing nor disrupt air flow. They should (if at all possible) be welded to the wheel. When trim balancing the wheel, **on the blower,** be sure to ground the welder **directly** to the blower wheel. Otherwise, the welding current will likely pass through the motor and damage the motor bearings.
2. **Grinding off material for cast aluminum wheels:**
   If you are grinding on the wheel to remove material, be very careful not to grind too much in one area. That could affect the structural integrity of the wheel.
3. **Forward curved wheels, Model LM only (also known as squirrel cage or multivane wheels).**
   These wheels have balancing clips attached to individual blades around the wheel. That is the only proper way to balance this type of wheel.
   NOTE:
   Removing any forward curve wheel from the blower to clean it, requires special attention when reinstalling the wheel back into the blower housing. Make sure you reinstall the wheel so the proper wheel-to-inlet clearance is maintained. Failure to do this will affect the blowers airflow (CFM), static pressure (SP) capabilities and efficiency. Consult Cincinnati Fan or our local sales office for your area for assistance if necessary.

D. Vibration:

As mentioned previously in this manual, excessive vibration can cause premature motor bearing failure that could lead to catastrophic failure of the blower. After performing any routine maintenance, the vibration readings should be taken again. New readings should be taken (maximum every 12 months) and compared to the readings you recorded in **Figure 3**, on page 8, during the initial startup. **If any major differences are present, the cause should be determined and corrected before the blower is put back into operation.**

The most common causes of vibration problems are:

1. Wheel unbalance.
2. Mechanical looseness.
3. Poor blower inlet and/or discharge conditions.
4. Foundation stiffness.

E. Dampers and Valves: (Airflow control devices)

Turn off and lock out power to the blower motor. Any dampers or valves should be periodically inspected to make sure all parts are still operable within their full range and there is no interference with any other damper or blower components. Any bearings or seals should be checked for their proper function. The manufacturers maintenance instructions should be followed.

F. Safety Equipment & Accessories:

It is the users responsibility to make sure that all safety guards required by the company, local, state and OSHA regulations are properly attached and fully functional at all times. If any guards become defective or non-functional at any time, **the power to the blower MUST be turned off and locked out** until complete repairs and/or replacements have been made, installed and inspected by authorized personnel.

Any accessories used in conjunction with the blower should also be inspected to make sure they are functioning within their intended limits and design specifications. The manufacturers maintenance manuals should be referred to for correct maintenance procedures. These accessories include, but are not limited to, the following:

Shaft seals, inspection doors, vibration isolators or vibration bases, air flow or pressure measuring equipment, hoods, controls, special coatings, silencers, expansion joints, valves, flexible connectors and filters.

VI. ORDERING REPLACEMENT PARTS:

Under normal conditions, you should not need any spare or replacement parts for at least 24 months after shipment from Cincinnati Fan. That does not include any wear due to abrasion, corrosion, excessive temperatures, abuse, misuse, accident or any severe conditions the fan was not designed for.

NOTICE:

1. **If this blower is vital to any process that could cost you lost revenue, we strongly recommend that you keep a replacement blower wheel and motor at your location.**

2. **If this blower is vital for the safety of any people and/or animals, we strongly recommend that you keep a complete blower/motor assembly, as originally ordered, at your location.**

To order any parts or complete units, contact us for the name of our sales office for your area. Or you can find them on our website at: **www.cincinnatifan.com**

WE MUST HAVE THE BLOWER SERIAL NUMBER FROM THE BLOWER NAME PLATE TO IDENTIFY PARTS CORRECTLY.

VII. TROUBLESHOOTING

⚠ DANGER

Troubleshooting should only be performed by trained personnel. Any potential electrical problems should only be checked by a licensed electrician. All safety rules, regulations and procedures MUST be followed. Failure to follow proper procedures can cause property damage, severe bodily injury and death.

Potential problems and causes listed below are in no order of importance or priority. The causes are only a list of the most common items to check to correct a problem. If you find the cause of a problem, **DO NOT** assume it is the **ONLY** cause of that problem. Different problems can have the same causes.

PROBLEM	CAUSE
Excessive Vibration	1. Loose mounting bolts, wheel set screws, taper-lock hubs. 2. Worn or corroded blower wheel. 3. Accumulation of foreign material on blower wheel. 4. Bent motor shaft. 5. Worn motor bearings. 6. Motor out of balance. 7. Inadequate structural support. 8. Support structure not sufficiently cross braced. 9. Weak or resonant foundation. 10. Foundation not flat and level.
Airflow (CFM) Too Low	1. Blower wheel turning in wrong direction (**rotation**). 2. Actual system static pressure (**SP**) is higher than expected. 3. Motor speed (**RPM**) too low. 4. Dampers or valves not adjusted properly. 5. Leaks or obstructions in duct work. 6. Filters dirty. 7. Inlet and/or discharge guards are clogged. 8. Duct elbow too close to blower inlet and/or discharge. 9. Improperly designed duct work 10. Blower wheel not properly located relative to the inlet bell (**LM** Model only).
Airflow (CFM) Too High	1. Actual system static pressure (**SP**) is lower than expected. 2. Motor speed (**RPM**) too high. 3. Filter not in place. 4. Dampers or valves not adjusted properly.

PROBLEM	CAUSE
Motor Overheating	**NOTE: A normal motor will operate at 174°F. See B-8 on page 6.** 1. Actual system static pressure **(SP)** is lower than expected. 2. Voltage supplied to motor is too high or too low. 3. Motor speed (**RPM**) too high or defective motor. 4. Air density higher than expected. 5. Motor wired incorrectly or loose wiring connections. 6. Cooling fan cover on back of motor is clogged. (Fan cooled motors only.)
Excessive Noise	1. Wheel rubbing inside of housing. 2. Worn or corroded blower wheel. 3. Accumulation of foreign material on blower wheel. 4. Loose mounting bolts, wheel set screws, or taper-lock hubs. 5. Bent motor shaft. 6. Worn motor bearings. 7. Motor out of balance. 8. Motor bearings need lubrication. 9. Vibration originating elsewhere in system. 10. System resonance or pulsation. 11. Inadequate or faulty design of blower support structure. 12. Blower operating near "stall" condition due to incorrect system design or installation.
Fan Doesn't Operate	1. Motor wired incorrectly. 2. Incorrect voltage supply. 3. Defective fuses or circuit breakers. 4. Power turned off elsewhere. 5. Motor wired incorrectly or loose wiring connections. 6. Defective motor.

VIII. LONG TERM STORAGE INSTRUCTIONS: (Storage exceeding 30 days after receipt of equipment)

NOTE: Failure to adhere to these instructions voids all warranties in their entirety.

1. Storage site selection:
   a. Level, well-drained, firm surface, in clean, dry and warm location. Minimum temperature of 50°F (10°C).
   b. Isolated from possibility of physical damage from construction vehicles, erection equipment, etc.
   c. Accessible for periodical inspection and maintenance.
2. The blower should be supported under each corner of its base to allow it to "breath". Supports (2 x 4's, timbers, or railroad ties) should be placed diagonally under each corner.
3. If the equipment is to be stored for more than three (3) months, the entire blower assembly must be loosely covered with plastic, **but not tightly wrapped**.
4. Storage Maintenance:

   A periodic inspection and maintenance log, by date and action taken, must be developed and maintained for each blower. See example below. Each item must be checked monthly.

EXAMPLE:

Storage / Maintenance Schedule Log

ITEM	ACTION	DATES CHECKED
1	Re-inspect units to insure any protective devices used are functioning properly. Check for scratches in the finish which will allow corrosion or rust to form.	
2	Rotate wheel a minimum of 10 full revolutions to keep the motor bearing grease from separating and drying out. ***This is a critical step.***	

Long Term Storage instructions continued on page 13.

5. General Motor Procedure:

   If the motor is not put into service immediately, the motor must be stored in a clean, dry, warm location. Minimum temperature of 50°F. (10°C,). Several precautionary steps must be performed to avoid motor damage during storage.

   a. Use a “Megger” each month to ensure that integrity of the winding insulation has been maintained. Record the Megger readings. Immediately investigate any significant drop in insulation resistance.
   b. **DO NOT** lubricate the motor bearings during storage. Motor bearings are packed with grease at the factory.
   c. If the storage location is damp or humid, the motor windings **must** be protected from moisture. This can be done by applying power to the motor’s space heaters, (IF AVAILABLE) while the motor is in storage. If the motor does not have space heaters, storing it in a damp or humid location will, very quickly, cause internal corrosion and motor failure which is not warranted.

   ***NOTE*:**
   For specific storage instructions, for the <u>actual</u> motor and any accessory parts that were supplied, refer to the manufacturer’s instructions.

IX. LIMITED WARRANTY:

Cincinnati Fan & Ventilator Company (Seller) warrants products of its own manufacture, against defects of material and workmanship under normal use and service for a period of eighteen (18) months from date of shipment or twelve (12) months from date of installation, whichever occurs first. This warranty does not apply to any of Seller's products or any part thereof which has been subject to extraordinary wear and tear, improper installation, accident, abuse, misuse, overloading, negligence or alteration. This warranty does not cover systems or materials not of Seller's manufacture. On products furnished by Seller, but manufactured by others, such as motors, Seller extends the same warranty as Seller received from the manufacturer thereof. Expenses incurred by Purchaser's in repairing or replacing any defective product will not be allowed except where authorized in writing and signed by an officer of the Seller.

The obligation of the Seller under this warranty shall be limited to repairing or replacing F.O.B. the Seller's plant, or allowing credit at Seller's option. **THIS WARRANTY IS EXPRESSLY IN LIEU OF ALL OTHER WARRANTIES EITHER EXPRESSED OR IMPLIED INCLUDING THE WARRANTIES OF MERCHANTABILITY AND FITNESS FOR A PARTICULAR PURPOSE AND OF ALL OTHER OBLIGATIONS AND LIABILITIES OF THE SELLER. THE PURCHASER ACKNOWLEDGES THAT NO OTHER REPRESENTATIONS WERE MADE TO PURCHASER OR RELIED UPON BY PURCHASER WITH RESPECT TO THE QUALITY OR FUNCTION OF THE PRODUCTS HEREIN SOLD.**

Removal of the Sellers nameplate or any generic fan nameplate containing the fan serial number voids all warranties, either written or implied. Failure to complete and document all the pre-startup and post startup checks and perform the suggested routine maintenance checks voids all warranties, either written or implied.

LIMITATION OF LIABILITY:

Notice of any claim, including a claim for defect in material or workmanship, must be given to Seller in writing within 30 days after receipt of the equipment or other products. Seller reserves the right to inspect any alleged defect at Purchaser's facility before any claim can be allowed and before adjustment, credit, allowance replacement or return will be authorized. See **RETURNS** below. Seller's liability with respect to such defects will be limited to the replacement, free of charge, of parts returned at Purchaser's expense F.O.B. Seller's plant and found to be defective by the Seller.

IN NO EVENT WILL SELLER BE LIABLE FOR SPECIAL, INDIRECT, INCIDENTAL OR CONSEQUENTIAL DAMAGES, WHETHER IN CONTACT, TORT, NEGLIGENCE, STRICT LIABILITY OR OTHERWISE, INCLUDING WITHOUT LIMITATION DAMAGES FOR INJURY TO PERSONS OR PROPERTY, LOST PROFITS OR REVENUE, LOST SALES OR LOSS OF USE OF ANY PRODUCT SOLD HEREUNDER. PURCHASER'S SOLE AND EXCLUSIVE REMEDY AGAINST SELLER WILL BE THE REPLACEMENT OF DEFECTIVE PARTS AS PROVIDED HEREIN OR REFUND OF THE PURCHASE PRICE FOR DEFECTIVE PRODUCTS, AT SELLER'S SOLE OPTION. SELLER'S LIABILITY ON ANY CLAIM, WHETHER IN CONTRACT, TORT, NEGLIGENCE, STRICT LIABILITY OR OTHERWISE, FOR ANY LOSS OR DAMAGE ARISING OUT OF OR IN CONNECTION WITH PURCHASER'S ORDER OR THE PRODUCTS OR EQUIPMENT PURCHASED HEREUNDER, SHALL IN NO CASE EXCEED THE PURCHASE PRICE OF THE EQUIPMENT GIVING RISE TO THE CLAIM.

RESPONSIBILITY:

It is the understanding of the Seller that Purchaser and/or User will use this equipment in conjunction with additional equipment or accessories to comply with all Federal, State and local regulations. The Seller assumes no responsibility for the Purchaser's or Users compliance with any Federal, State and local regulations.

RETURNS:

Cincinnati Fan & Ventilator Company assumes no responsibility for any material returned to our plant without our permission. An **RMA** (Return Material Authorization) number must be obtained and clearly shown on the outside of the carton or crate and on a packing slip. Any items returned must be shipped freight prepaid. Failure to comply will result in refusal of the shipment at our receiving department.

DISCLAIMER

This manual, and all its content herein, is based on all applicable known material at the time this manual was created. **Any parts of this manual are subject to change at any time and without notice.**

If any statements, diagrams and/or instructions contained herein, **for components not manufactured by the Seller,** conflict with instructions in the manufacturer's manual (i.e.: motors, dampers, etc.), the instructions in the manufacturer's manual, for that component take precedent.

Should you want the latest version of this manual, please contact us or our sales office for your area. Or, you can print a current version by going to our website at: **www.cincinnatifan.com**

cincinnati fan

7697 Snider Road, Mason, OH 45040-9135
Phone: (513) 573-0600 Fax: (513) 573-0640
E-Mail: sales@cincinnatifan.com

X. PARTS DRAWING:

PLEASE NOTE

Cincinnati Fan manufactures many models and arrangements with special variations. For that reason, the maintenance manuals contained on our website do not include a parts drawing nor the completed blower or fan specifications on page 1. For the parts drawing of all the standard components and specifications for the specific blower or fan that you have, please contact our local Cincinnati Fan sales office for your area.

You will need to give them the serial number shown on the blower or fan nameplate so they can supply you the correct information.

Click on ***"Contact a Sales Rep"*** on our website for the name and contact information for our local sales office for your area. **www.cincinnatifan.com**

OUELLET

180, 3rd Avenue , L'Islet, Quebec, G0R 2C0, CANADA
Phone: (418) 247-3947/1 800 463-7043
Fax: (418) 247-7801/1 800 662-7801
www.ouellet.com

INSTRUCTIONS
"OAS" Series

THE INSTALLATION MUST BE EXECUTED BY A QUALIFIED TECHNICIAN

RISK OF ELECTROCUTION

ATTENTION

Basic precautions should always be followed to reduce the risk of fire, electric shock, and injury to persons.

- Read all instructions before using this heater.
- Disconnect all power supplies before working on circuit.
- Do not heat air containing combustible materials.
- Mount heater out of reach.
- Install at least 61 cm (2 ft.) from floor except 40 - 60 KW at least 2.4 m (8 ft.) from floor.
- Do not use outdoors.
- Do not insert or allow foreign objects to enter any ventilation or exhaust opening as this may cause an electric shock or fire, or damage the heater.
- Do not block air intakes or exhaust in any manner.
- Heater contains arcing and sparking parts. Do not use it in areas where gasoline, paint, or flammable liquids are used or stored.
- Use this heater only as described in this manual. Any other use not recommended by the manufacturer may cause fire, electric shock, or injury to persons.

KEEP THIS INSTRUCTION FOR THE USER
INS09-200311-03

LOCATION OF HEATERS AND REMOTE THERMOSTATS

1- For best results, do not exceed mounting heights as per table below :

Maximum recommended mounting height :

2 - 10 kW	2.4 m (8 ft.)
15 - 30 kW	3.0 m (10 ft.)
40 - 60 kW	4.5 m (15 ft.)

2- Direct discharge air streams :
- Away from room occupants.
- Away from columns, posts, machinery and partitions.
- Parallel to outside walls.
- Along the windward side of buildings exposed to prevailing winds.

3- Locate thermostats on interior partitions, walls or posts (insulate from cold steel posts). Install thermostats away from cold drafts, internal heat sources and from heater discharge.

4- Small rooms require only one unit heater. In large rooms, arrange multiple units to provide perimeter circulation as illustrated in fig. 1 and 2.

Fig. 1

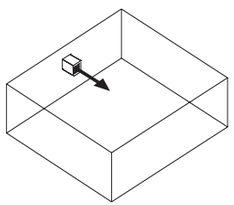

Fig. 2

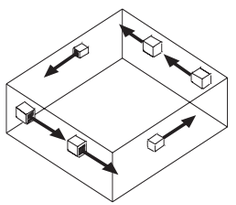

POWER SUPPLY CONNECTIONS

The power supply may be single or three phase as shown on the nameplate. The wiring diagram is on the inside of the terminal compartment cover. Wire heater in accordance with local and national codes.

TEST

- To test the unit heater, temporarily set thermostat to maximum temperature.
- Make sure that the fan rotates in the correct direction; airflow should be in the direction of the arrow such as indicated on the fig. 4.

WARNING
- Disconnect all power supplies before working on circuit.
- Do not heat air containing combustible materials.
- Mount heater out of reach.
- Install at least 61 cm (2 ft.) from floor except 40 - 60 kW at least 2.4 m (8 ft.) from floor.

Minimum clearance from walls and ceiling are :

2 - 10 kW	10 cm (4 in.)
15 - 30 kW	15 cm (6 in.)
40 - 60 kW	30 cm (12 in.)

OVERTEMPERATURE PROTECTION

The motor and the electric heating elements are protected against overtemperature by automatic reset thermal high-limits.
Cycling of either high-limit is an indication of abnormal operation and should be corrected at once.

LUBRIFICATION OF MOTOR

The motor includes sealed lubrification-free bearings.

MAINTENANCE

Once a year, remove the dust accumulation inside the heater using a vacuum cleaner or compressed air. Cleaning should be done while the heater is disconnected from the supply circuit.

A qualified technician should perform any other servicing.

WARRANTY

Please refer to the product sheet at www.ouellet.com.

Fig. 3 - MOUNTING
OAS 2-30kW

Horizontal wall or ceiling mounting using 1 of 2 supplied brackets which allow 360° rotation.

Ceiling mounting using the U-shaped bracket

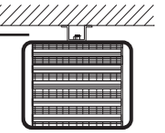

Wall mounting using the triangular braket.

How to mount it.

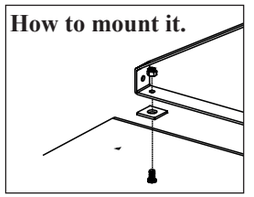

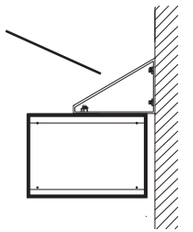

Vertical mounting using 4 threaded rods 1/2 in. - 13 UNC not included

Diffuser cone available

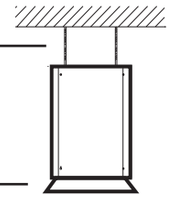

Fig. 4 - MOUNTING
OAS 40-60kW

4 hooks of suspension supplied 1/2 in. -13 UNC threaded rods not included

Hook of suspension

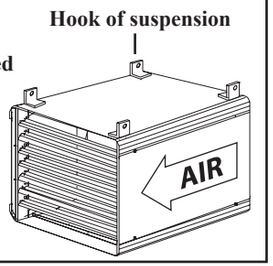

Fig. 5 - MOUNTING
OAS-MD 40-60kW

(Mining application)

4 hooks of suspension supplied 1/2 in. -13 UNC threaded rods not included

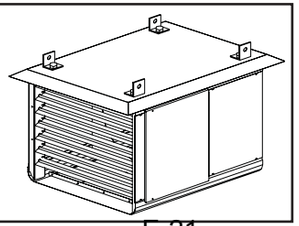

OAS *series*

Suspended Unit Heater

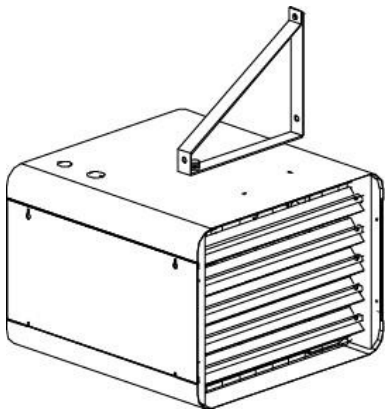

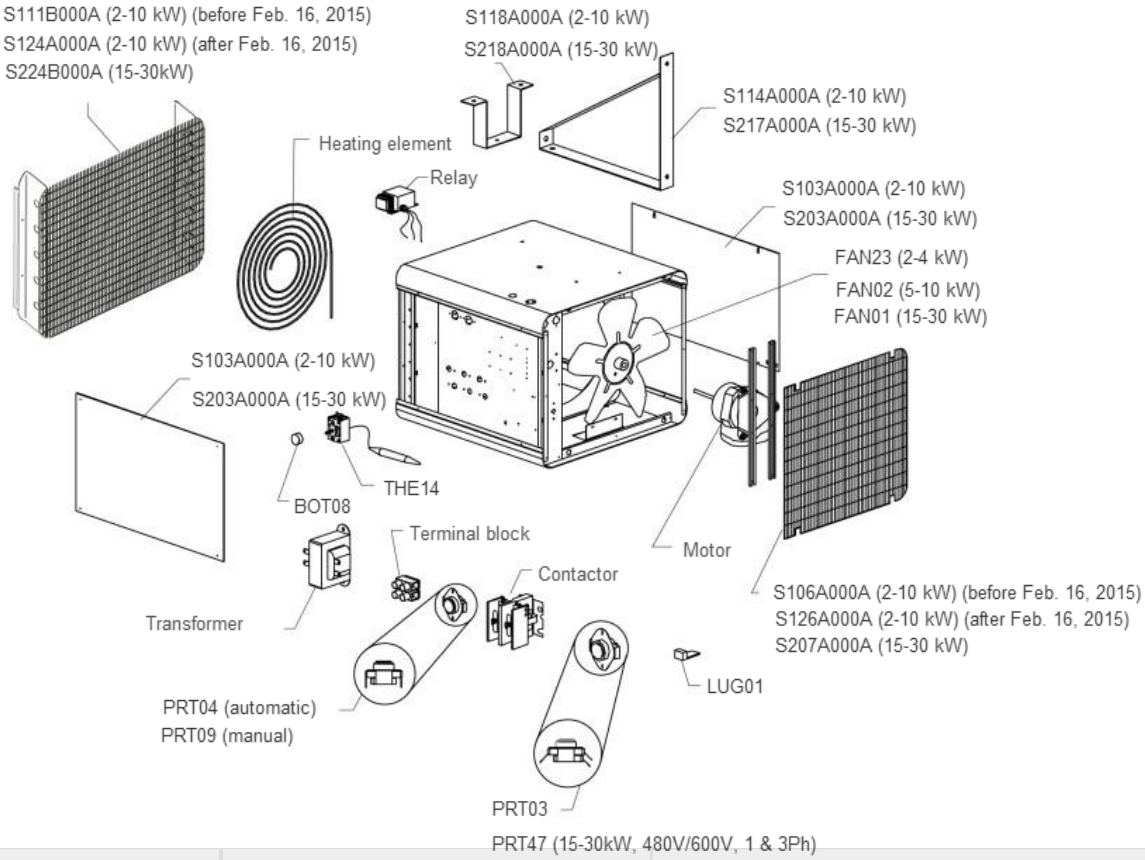

Amp	Fusible *Fuse*	Porte fusible *Fuse holder*
1.5	FUS01	SFU01
15	FUS02	FUS07
30	FUS09	FUS07
60	FUS04	FUS05
60	FUS04	FUS06

Watts	Volts (ph)	Élément chauffant *Heating element*	Moteur *Motor*	Transformateur *Transformer*	Contacteur *Contactor*	Bornier d'alimentation *Terminal block*

2000	240 (1)	ELO20	MOT03	-	CTT01	LUG03
	480 (1)	ELU11		TRF13		
	600 (1)	ELO28		TRF02		
	347 (1)	ELO26		TRF03		
	208 (1)	ELO21		-		
	480 (3)	ELU01		TRF13		
	600 (3)	ELO24		TRF02		
	208 (3)	ELO16		-		
3000	240 (1)	ELO22	MOT03	-	CTT01	LUG03
	480 (1)	ELU13		TRF13		
	600 (1)	ELO31 + ELO28		TRF02		
	347 (1)	ELO26 + ELO25		TRF03		
	208 (1)	ELO20		-		
	480 (3)	ELU27		TRF13		
	600 (3)	ELO25		TRF02		
	208 (3)	ELO17		-		
4000	240 (1)	ELO20	MOT03	-	CTT01	LUG03
	480 (1)	ELU09		TRF13		
	600 (1)	ELO28		TRF02		
	347 (1)	ELO26		TRF03		
	208 (1)	ELO21		-		
	480 (3)	ELU09		TRF13		
	600 (3)	ELO28		TRF02		
	208 (3)	ELO18		-		
5000	240 (1)	ELO21*	MOT03	-	CTT01	LUG03
	480 (1)	ELU10		TRF13		
	600 (1)	ELO29		TRF02		
	347 (1)	ELO27		TRF03		
	208 (1)	ELO23		-		
	480 (3)	ELU10		TRF13		
	600 (3)	ELO29		TRF02		
	208 (3)	ELO20 + ELO21 OU/OR ELO90		-	CTT01** OU/OR CTT02	
7500	240 (1)	ELO21	MOT03	-	CTT01	LUG06
	347 (1)	ELO27		TRF03		
	480 (3)	ELU12		TRF13		LUG03
	600 (3)	ELO30		TRF02		
	208 (3)	ELO23		-		
10000	240 (1)	ELO23	MOT03	-	CTT02	LUG06
	480 (3)	ELU14		TRF13	CTT01	LUG03
	600 (3)	ELO31		TRF02		
	208 (3)	ELO19		-	CTT02	LUG02
15000	240 (1)	ELO33	MOT15	-	CTT02	LUG06
	480 (3)	ELU15	OAS-MOT07-KIT	TRF22	CTT01	LUG03
	600 (3)	ELO37		TRF01		
	208 (3)	ELO34	MOT15	-	CTT02	LUG02

Watts	Volts (ph)	Élément chauffant *Heating element*	Moteur *Motor*	Transformateur *Transformer*	Contacteur *Contactor*	Bornier d'alimentation *Terminal block*
20000	240 (1)	ELO34	MOT15	-	CTT02	LUG05
	480 (3)	ELU16	OAS-MOT07-KIT	TRF22		LUG02
	600 (3)	ELO38		TRF01	CTT01	LUG03
	208 (3)	ELO121***	MOT15	-	CTT02	LUG02
25000	240 (1)	ELO35	MOT15	-	CTT02	LUG05
	480 (3)	ELU17	OAS-MOT07-KIT	TRF22		LUG02
	600 (3)	ELO39		TRF01		
	208 (3)	ELO32	MOT15	-		LUG05
30000	480 (3)	ELU18	OAS-MOT07-KIT	TRF22	CTT02	LUG02
	600 (3)	ELO36		TRF01		

* 2xELO21 depuis/since 2010-01-14 (2x4004001100 avant/before 2010-01-14)
** CTT02 depuis/since 2008-02-28
*** ELO121 depuis/since 2011-03-28 (ELO35 avant/before 2011-03-28)

Series DS-300 Flow Sensors

Installation and Operating Instructions Flow Calculations

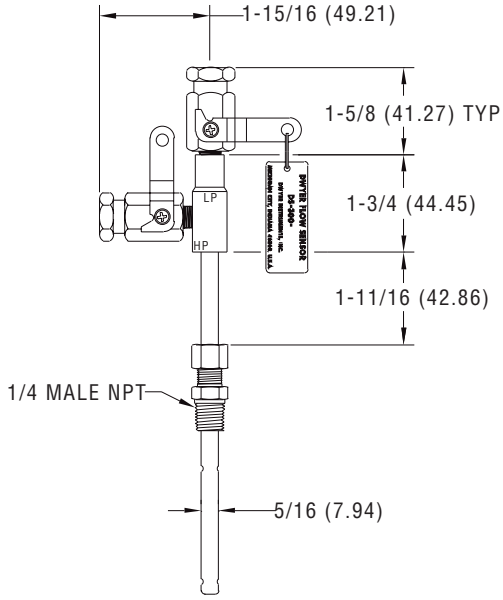

Series DS-300 Flow Sensors are averaging pitot tubes that provide accurate, convenient flow rate sensing. When purchased with a Dwyer Capsuhelic® for liquid flow or Magnehelic® for air flow, differential pressure gage of appropriate range, the result is a flow-indicating system delivered off the shelf at an economical price. Series DS-300 Flow Sensors are designed to be inserted in the pipeline through a compression fitting and are furnished with instrument shut-off valves on both pressure connections. Valves are fitted with 1/8″ female NPT connections. Accessories include adapters with 1/4″ SAE 45° flared ends compatible with hoses supplied with the Model A-471 Portable Capsuhelic® kit. Standard valves are rated at 200°F (93.3°C). Where valves are not required, they can be omitted at reduced cost. Series DS-300 Flow Sensors are available for pipe sizes from 1″ to 10″.

INSPECTION

Inspect sensor upon receipt of shipment to be certain it is as ordered and not damaged. If damaged, contact carrier.

INSTALLATION

General - The sensing ports of the flow sensor must be correctly positioned for measurement accuracy. The instrument connections on the sensor indicate correct positioning. The side connection is for total or high pressure and should be pointed upstream. The top connection is for static or low pressure.

Location - The sensor should be installed in the flowing line with as much straight run of pipe upstream as possible. A rule of thumb is to allow 10 - 15 pipe diameters upstream and 5 downstream. The table below lists recommended up and down piping.

PRESSURE AND TEMPERATURE

Maximum: 200 psig (13.78 bar) at 200°F (93.3°C).

Upstream and Downstream Dimensions in Terms of Internal Diameter of Pipe*

Upstream Condition	Minimum Diameter of Straight Pipe		
	Upstream		Downstream
	In-Plane	Out of Plane	
One Elbow or Tee	7	9	5
Two 90° Bends in Same Plane	8	12	5
Two 90° Bends in Different Plane	18	24	5
Reducers or Expanders	8	8	5
All Valves**	24	24	5

* Values shown are recommended spacing, in terms of internal diameter for normal industrial metering requirements. For laboratory or high accuracy work, add 25% to values.

** Includes gate, globe, plug and other throttling valves that are only partially opened. If valve is to be fully open, use values for pipe size change. **CONTROL VALVES SHOULD BE LOCATED AFTER THE FLOW SENSOR.**

DWYER INSTRUMENTS, INC.
P.O. BOX 373 • MICHIGAN CITY, INDIANA 46361, U.S.A.
Phone: 219/879-8000 **www.dwyer-inst.com**
Fax: 219/872-9057 **e-mail: info@dwyer-inst.com**

POSITION

Be certain there is sufficient clearance between the mounting position and other pipes, walls, structures, etc, so that the sensor can be inserted through the mounting unit once the mounting unit has been installed onto the pipe.

Flow sensors should be positioned to keep air out of the instrument connecting lines on liquid flows and condensate out of the lines on gas flows. The easiest way to assure this is to install the sensor into the pipe so that air will bleed into, or condensate will drain back to, the pipe.

For Air or Gas Flow

Install in upper quadrant of pipe

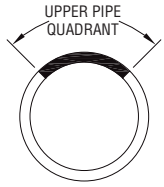

Condensate drains back to pipe

For Liquid or Steam Flow

Install in lower quadrant of pipe

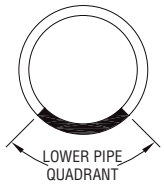

Air bleeds back to pipe

INSTALLATION

1. When using an A-160 thred-o-let, weld it to the pipe wall. If replacing a DS-200 unit, an A-161 bushing (1/4˝ x 3/8˝) will be needed.

2. Drill through center of the thred-o-let into the pipe with a drill that is slightly larger than the flow sensor diameter.

3. Install the packing gland using proper pipe sealant. If the packing gland is disassembled, note that the tapered end of the ferrule goes into the fitting body.

4. Insert sensor until it bottoms against opposite wall of the pipe, then withdraw 1/16˝ to allow for thermal expansion.

5. Tighten packing gland nut finger tight. Then tighten nut with a wrench an additional 1-1/4 turns. Be sure to hold the sensor body with a second wrench to prevent the sensor from turning.

INSTRUMENT CONNECTION

Connect the slide pressure tap to the high pressure port of the Magnehelic® (air only) or Capsuhelic® gage or transmitting instrument and the top connection to the low pressure port.

See the connection schematics below.

Bleed air from instrument piping on liquid flows. Drain any condensate from the instrument piping on air and gas flows.

Open valves to instrument to place flow meter into service. For permanent installations, a 3-valve manifold is recommended to allow the gage to be zero checked without interrupting the flow. The Dwyer A-471 Portable Test Kit includes such a device.

Water Flow

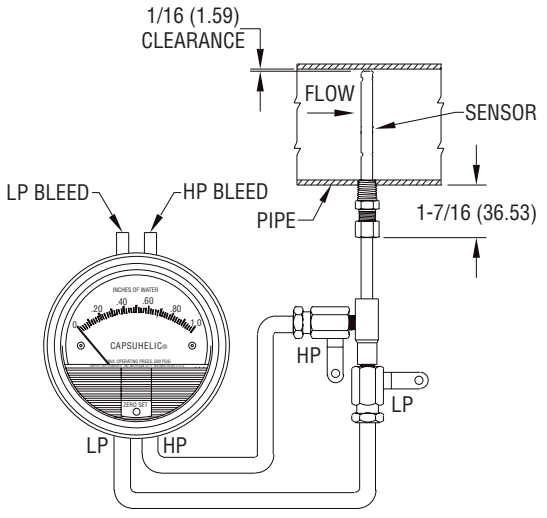

Air or Gas Flow

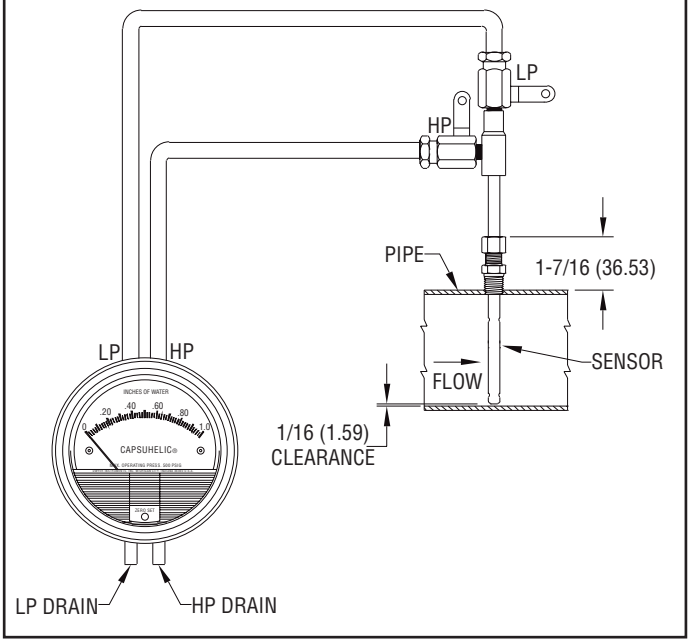

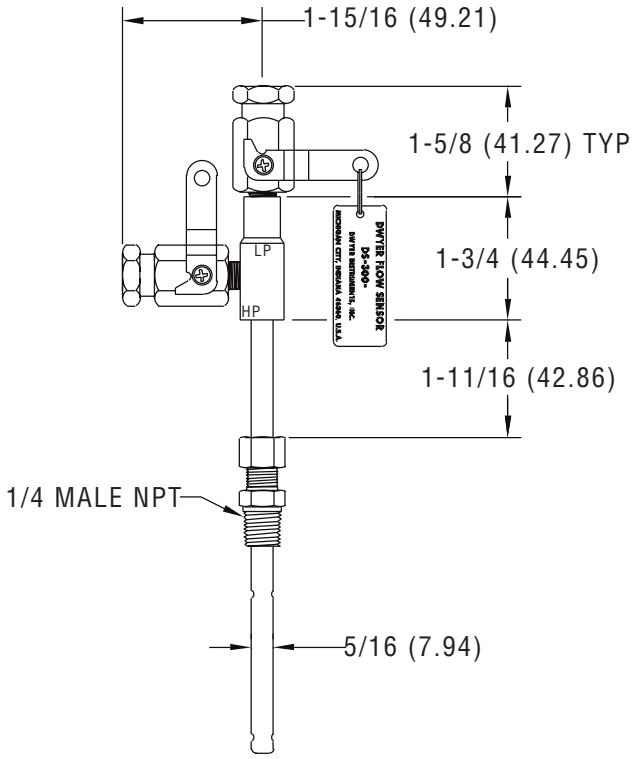

Flow Calculations and Charts

The following information contains tables and equations for determining the differential pressure developed by the DS-300 Flow Sensor for various flow rates of water, steam, air or other gases in different pipe sizes.

This information can be used to prepare conversion charts to translate the differential pressure readings being sensed into the equivalent flow rate. When direct readout of flow is required, use this information to calculate the full flow differential pressure in order to specify the exact range of Dwyer Magnehelic® or Capsuhelic® gage required. Special ranges and calculations are available for these gages at minimal extra cost. See bulletins A-30 and F-41 for additional information on Magnehelic® and Capsuhelic® gages and DS-300 flow sensors.

For additional useful information on making flow calculations, the following service is recommended: Crane Valve Co. Technical Paper No. 410 "Flow of Fluids Through Valves, Fittings and Pipe." It is available from Crane Valve Company, www.cranevalve.com.

Using the appropriate differential pressure equation from Page 4 of this bulletin,calculate the differential pressure generated by the sensor under normal operating conditions of the system. Check the chart below to determine if this value is within the recommended operating range for the sensor. Note that the data in this chart is limited to standard conditions of air at 60°F (15.6°C) and 14.7 psia static line pressure or water at 70°F (21.1°C). To determine recommended operating ranges of other gases, liquids an/or operating conditions, consult factory.

Note: the column on the right side of the chart which defines velocity ranges to avoid. Continuous operation within these ranges can result in damage to the flow sensor caused by excess vibration.

Pipe Size (Schedule 40)	Flow Coefficient "K"	Operating Ranges Air @ 60°F & 14.7 psia (D/P in. W.C.)	Operating Ranges Water @ 70°F (D/P in. W.C.)	Velocity Ranges Not Recommended (Feet per Second)
1	0.52	1.10 to 186	4.00 to 675	146 to 220
1-1/4	0.58	1.15 to 157	4.18 to 568	113 to 170
1-1/2	0.58	0.38 to 115	1.36 to 417	96 to 144
2	0.64	0.75 to 75	2.72 to 271	71 to 108
2-1/2	0.62	1.72 to 53	6.22 to 193	56 to 85
3	0.67	0.39 to 35	1.43 to 127	42 to 64
4	0.67	0.28 to 34	1.02 to 123	28 to 43
6	0.71	0.64 to 11	2.31 to 40	15 to 23
8	0.67	0.10 to 10	0.37 to 37	9.5 to 15
10	0.70	0.17 to 22	0.60 to 79	6.4 to 10

FLOW EQUATIONS

1. Any Liquid

$$Q\ (GPM) = 5.668 \times K \times D^2 \times \sqrt{\Delta P / S_f}$$

2. Steam or Any Gas

$$Q\ (lb/Hr) = 359.1 \times K \times D^2 \times \sqrt{p \times \Delta P}$$

3. Any Gas

$$Q\ (SCFM) = 128.8 \times K \times D^2 \times \sqrt{\frac{P \times \Delta P}{(T + 460) \times S_s}}$$

DIFFERENTIAL PRESSURE EQUATIONS

1. Any Liquid

$$\Delta P\ (in.\ WC) = \frac{Q^2 \times S_f}{K^2 \times D^4 \times 32.14}$$

2. Steam or Any Gas

$$\Delta P\ (in.\ WC) = \frac{Q^2}{K^2 \times D^4 \times p \times 128{,}900}$$

3. Any Gas

$$\Delta P\ (in.\ WC) = \frac{Q^2 \times S_s \times (T + 460)}{K^2 \times D^4 \times P \times 16{,}590}$$

Technical Notations

The following notations apply:

ΔP = Differential pressure expressed in inches of water column
Q = Flow expressed in GPM, SCFM, or PPH as shown in equation
K = Flow coefficient— See values tabulated on Pg. 3.
D = Inside diameter of line size expressed in inches.

For square or rectangular ducts, use: $D = \sqrt{\frac{4 \times \text{Height} \times \text{Width}}{\pi}}$

P = Static Line pressure (psia)
T = Temperature in degrees Fahrenheit (plus 460 = °Rankine)
p = Density of medium in pounds per square foot
S_f = Sp Gr at flowing conditions
S_s = Sp Gr at 60°F (15.6°C)

SCFM TO ACFM EQUATION

$$SCFM = ACFM \times \left(\frac{14.7 + PSIG}{14.7}\right) \left(\frac{520^*}{460 + °F}\right)$$

$$ACFM = SCFM \times \left(\frac{14.7}{14.7 + PSIG}\right) \left(\frac{460 + °F}{520}\right)$$

$$\text{POUNDS PER CUBIC FOOT STD.} = \text{POUNDS PER CUBIC FOOT ACT.} \times \left(\frac{14.7}{14.7 + PSIG}\right) \left(\frac{460 + °F}{520^*}\right)$$

$$\text{POUNDS PER CUBIC FOOT ACT.} = \text{POUNDS PER CUBIC FOOT STD.} \times \left(\frac{14.7 + PSIG}{14.7}\right) \left(\frac{520^*}{460 + °F}\right)$$

1 Cubic foot of air = 0.076 pounds per cubic foot at 60° F (15.6°C) and 14.7 psia.
* (520°= 460 + 60°) Std. Temp. Rankine

©Copyright 2004 Dwyer Instruments, Inc.
Printed in U.S.A. 7/04 FR# 72-440451-01 Rev. 2

DWYER INSTRUMENTS, INC.
P.O. BOX 373 • MICHIGAN CITY, INDIANA 46361, U.S.A.
Phone: 219/879-8000 www.dwyer-inst.com
Fax: 219/872-9057 e-mail: info@dwyer-inst.com

Series 1800 Low Differential Pressure Switches for General Industrial Service

Specifications — Installation and Operating Instructions

Model 1823 pressure switch. UL and CSA Listed, FM and CENELEC approved.

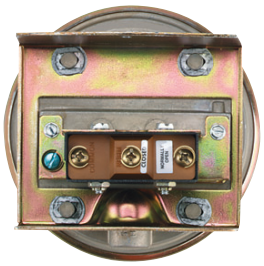

Series 1823 pressure switch. Conduit enclosure removed to show electric switch.

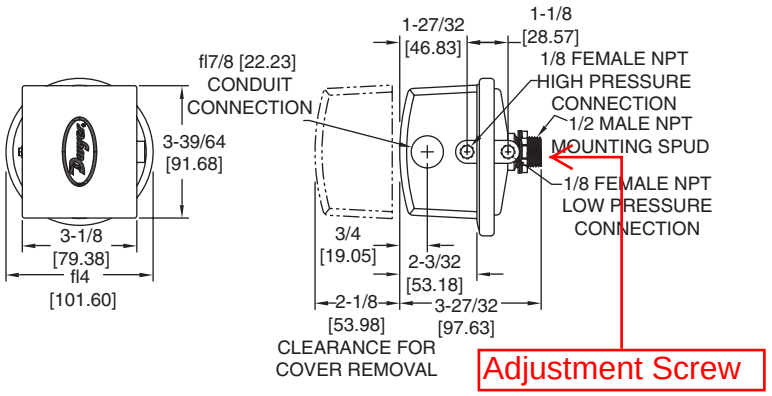

Construction and dimensions. Series 1823 pressure switches.

One of our most popular pressure switches. Combines small size and low price with 2% repeatability for enough accuracy for all but the most demanding applications. Set point adjustment inside the mounting switch on one side of a wall or panel with adjustment easily accessible on the opposite side.

***Model 1823 shown; (1823 replaces 1820, 1821 and 1822 which are similar).**

Environmental (MIL) Switch

Unlisted Model 1820 can be furnished with special snap switch sealed against the environment for high humidity and/or for government applications. Similar to standard Model 1823 except dead band is slightly greater. Specify Model 1820 (Range No.) "MIL" in ordering.

SERIES 1823 SWITCHES — OPERATING RANGES & DEADBANDS

Model Number	Operating Range, Inches W.C.	Approximate Dead Band	
		At Min. Set Point	At Max. Set Point
1823-00	0.07 to 0.22	0.05	0.05
1823-0	0.15 to 0.5	0.06	0.06
1823-1	0.3 to 1.0	0.08	0.08
1823-2	0.5 to 2.0	0.10	0.12
1823-5	1.5 to 5.0	0.14	0.28
1823-10	2.0 to10	0.18	0.45
1823-20	3 to 22	0.35	0.70
1823-40	5 to 44	0.56	1.10
1823-80	9 to 85	1.30	3.0

SPECIFICATIONS

Service: Air and non-combustible, compatible gases.

Wetted Materials: Consult Factory.

Temperature Limits: -30 to 180°F (-34 to 82.2°C). 1823-00, -20 to 180°F (-28.9 to 82.2°C).

Pressure Limits: 10 psig (68.95 kPa) continuous, 25 psig (172.4 kPa) surge.

Switch Type: Single-pole double-throw (SPDT).

Repeatability: ±2%.

Electrical Rating: 15 A @ 120-480 VAC, 60 Hz. Resistive 1/8 HP @125 VAC, 1/4 HP @ 250 VAC, 60 Hz. De-rate to 10 A for operation at high cycle rates.

Electrical Connections: 3 screw type, common, normally open and normally closed.

Process Connections: 1/8″ female NPT.

Mounting Orientation: Diaphragm in vertical position. Consult factory for other position orientations.

Set Point Adjustment: Screw type inside mounting spud.

Weight: 1 lb, 5 oz (595 g).

Agency Approvals: CE, UL, CSA, FM.

DWYER INSTRUMENTS, INC.
P.O. BOX 373 • MICHIGAN CITY, INDIANA 46361, U.S.A.
Phone: 219/879-8000
Fax: 219/872-9057
www.dwyer-inst.com
e-mail: info@dwyer-inst.com

INSTALLATION

1. Select a location free form excessive vibration and where oil or water will not drip upon the switch. See special housings for unusual conditions.
2. **While not required, positioning the pressure connections down is recommended.** Mount the switch with the diaphragm in a vertical plane. Switch with the diaphragm in a vertical plane. Switch must be recalibrated for each change in operating position.
3. Connect switch to source of pressure differential. Metal tubing with 1/4" O.D. is recommended but any tubing system which will not restrict the air flow is satisfactory. Note that the low pressure connection may be made to the 1/2" spud at the back of the switch if desired. If so connected, drill 1/16" diameter holes in the Spring Retainer flange and the head of Adjustment Screw to provide opening to the switch interior and plug the other low pressure connection.
4. Electrical connections to the standard single pole, double throw snap switch are provided by means of screw terminals marked "common", "norm open", and "norm closed". The normally open contacts close and the normally closed contact open when pressure increases beyond the set point.
5. Switch loads should not exceed the maximum specified current rating of 15 amps resistive. Switch capabilities decrease with high load inductance or rapid cycle rates. whenever and application involves one or more of these factors, the user may find it desirable to limit the switched current to 10 amps or less in the interest of prolonged switch life.

ADJUSTMENT

1. If the switch has been factory preset, check the set-point before placing in service to assure it has not shifted in transit.
2. If switching has not been preset or it is desired to change the point, observe the following procedure:
   a. To adjust the set point turn the slotted Adjustment Screw clockwise to increase the set point and counterclockwise to decrease the set point.
   b. The following is a recommended procedure for calibrating or checking calibration: Use a "T" assembly with three rubber tubing leads, all as short as possible and the entire assembly offering minimum flow restriction. Run one lead to the pressure switch, another to a manometer of known accuracy and appropriate range, and apply pressure through the third tube. Make final approach to the set point slowly. Note the manometer and pressure switch will have different response characteristics due to different internal volumes, lengths of tubing, oil drainage, etc. Be certain switch is checked in position it will assume in use, i.e. vertical, horizontal, etc.

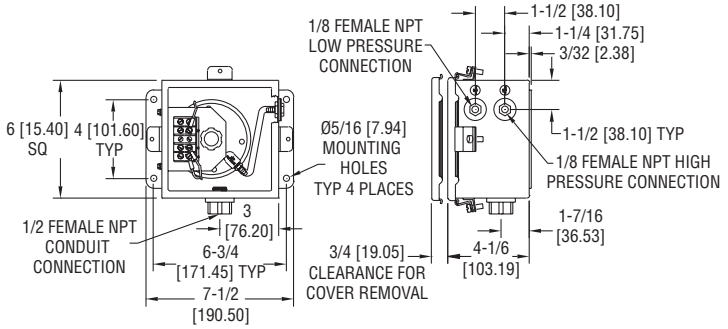

Weatherproof Enclosure

16 ga. steel enclosure for unusually wet or oily conditions. Withstands 200 hour salt spray test. Gasketed cover. Weight 5-1/2 lb (2.5 kg). Switch must be installed at factory. Specify "WP" in addition to switch catalog number.

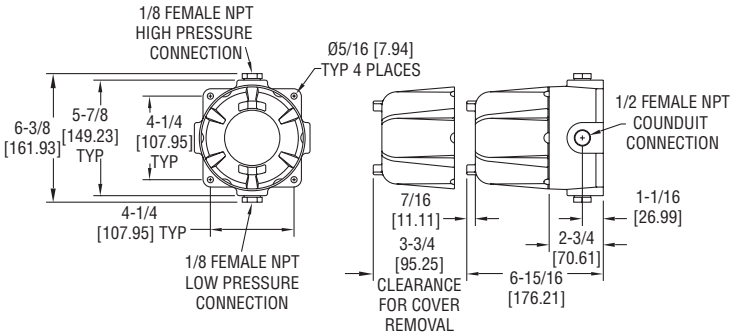

Explosion-Proof Housing

Cast iron base and aluminum dome cover. Approximate weight 7-1/2 lb (3.4 kg). Specify "EXPL" in addition to switch catalog number.

SERIE 1800 Interruptor Para Baja Presión Diferencial

Model 1823 pressure switch. UL and CSA Listed, FM approved.

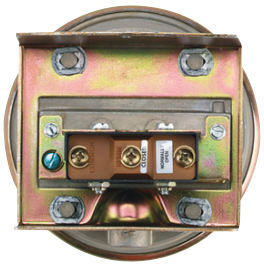

Series 1823 pressure switch. Conduit enclosure removed to show electric switch.

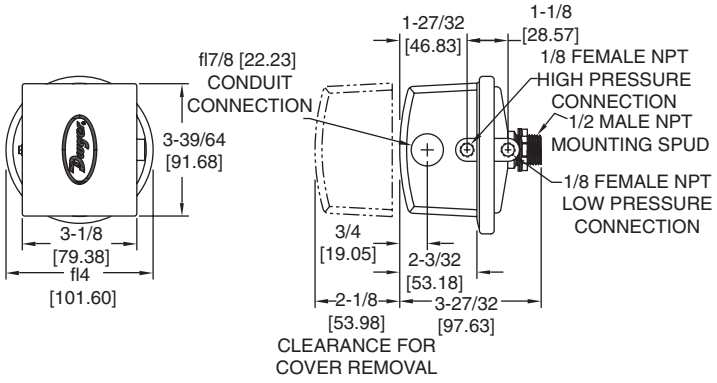

Construction and dimensions. Series 1823 pressure switches.

Uno de nuestros mas populares interruptores de presión. Combina un pequeño tamaño y bajo precio, con una repetibilidad del 2%, exactitud suficiente para las aplicaciones con mas demanda. El ajuste del punto de operación en un extremo, permite instalar el interruptor de un lado en las pared o tablero, permitiendo acceso al tornillo de ajuste.

Interruptor para Ambiente Húmedo (MIL)

El modelo 1820 puede ser fabricado son un sello especial a prueba de intemperie, o para aplicaciones con alta humedad. Similar al modelo 1823, excepto que la banda de operación es mayor.

Especifique el modelo 1820 (Rango No.) “Mil” en su orden.

Model Number	Operating Range, Inches W.C.	Approximate Dead Band	
		At Min. Set Point	At Max. Set Point
1823-00	0.07 to 0.22	0.05	0.05
1823-0	0.15 to 0.5	0.06	0.06
1823-1	0.3 to 1.0	0.08	0.08
1823-2	0.5 to 2.0	0.10	0.12
1823-5	1.5 to 5.0	0.14	0.28
1823-10	2.0 to10	0.18	0.45
1823-20	3 to 22	0.35	0.70
1823-40	5 to 44	0.56	1.10
1823-80	9 to 85	1.30	3.0

Especificaciones:
Interruptor de presión diferencial operado por diafragma de 4”, para activar un interruptor de presión tipo simple polo doble tiro. El diafragma esta controlado por un resorte calibrado que se puede ajustar para fijar la presión diferencial exacta a la cual el interruptor actuara. El movimiento del diagragma es transmitido al botón del interruptor por un medio mecánico. Interruptor Dwyer Instruments, Inc. Catalogo No. 1823-__ __ para el rango de operación requerido.

SPECIFICATIONS

Service: Air and non-combustible, compatible gases.

Wetted Materials: Consult Factory.

Temperature Limits: -30 to 180°F (-34 to 82.2°C). 1823-00, -20 to 180°F (-28.9 to 82.2°C).

Pressure Limits: 10 psig (68.95 kPa) continuous, 25 psig (172.4 kPa) surge.

Switch Type: Single-pole double-throw (SPDT).

Repeatability: ±2%.

Electrical Rating: 15 A @ 120-480 VAC, 60 Hz. Resistive 1/8 HP @125 VAC, 1/4 HP @ 250 VAC, 60 Hz. De-rate to 10 A for operation at high cycle rates.

Electrical Connections: 3 screw type, common, normally open and normally closed.

Process Connections: 1/8″ female NPT.

Mounting Orientation: Diaphragm in vertical position. Consult factory for other position orientations.

Set Point Adjustment: Screw type inside mounting spud.

Weight: 1 lb, 5 oz (595 g).

Agency Approvals: CE, UL, CSA, FM.

DWYER INSTRUMENTS, INC.
P.O. BOX 373 • MICHIGAN CITY, INDIANA 46361, U.S.A.
Phone: 219/879-8000 www.dwyer-inst.com
Fax: 219/872-9057 e-mail: info@dwyer-inst.com

INSTALACIÓN:

1. Seleccione una ubicación libre de vibración excesiva, en donde el agua o aceite no entre al interruptor. Revise encapsulados especiales para aplicaciones especiales.
2. Mientras no se requiera otra, las conexión de presión inferior es recomendada. Monte el interruptor con el diafragma en posición vertical, el interruptor debe recalibrarse para cada cambio de posición.
3. Conecte el interruptor a la fuente de presión diferencial. Tubo metálico con diámetro de 1/4" es recomendado, pero cualquier sistema de tubería que no restrinja el flujo de aire es bueno.
4. Conexiones eléctricas estándar de los interruptores SPDT, común, NA y NC. Los contactos cambian cuando se incrementa la presión del punto de operación.
5. La carga del interruptor no debe exceder los 15 Amp. Especificados. Las capacidades decrecen con altas cargas inductivas y ciclos rápidos de actuación, por lo que en estos casos los limites de corriente deben ser 10 Amp. 0 menores para incrementar la vida del interruptor.

AJUSTES:

1. Si el interruptor ha sido calibrado en fabrica, revise el punto de operación antes de ponerlo en servico.
2. De lo contrario, siga los siguientes pasos:
   A. Para ajustar el punto de operación, gire el tornillo de calibración en sentido de las manecillas del reloj para aumentar el valor y en contra de las manecillas del reloj para dis minuir el valor del punto de operación.
   B. Lo siguiente se recomienda para calibrar o revisar la calibración: Use una T con tres mangueras plásticas, tan pequeñas como sean posible. Conecte una manguera al interruptor de presión, otra al manómetro y por la tercera aplique la presión de esta forma podrá ajustar el interruptor a la presión requerida lo mas exacto posible.

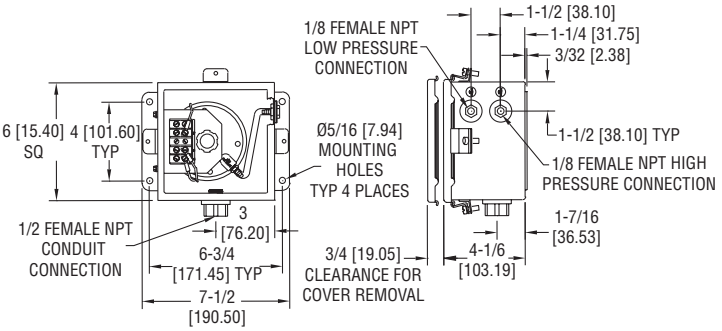

Encapsulado a Prueba de Intemperie
Encapsulado de acero para condiciones húmedas y/o aceitosas, soporta pruebas de 200 horas de spray salino, pesa 5-1/2 libras. El interruptor debe ser instalado en la planta al momento de su fabricación. Especifique "WP" mas el modelo del interruptor en catalogo.

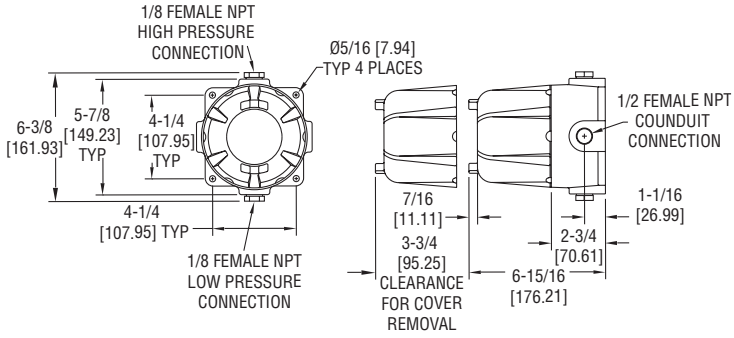

Encapsulado a Prueba de Explosión
Encapsulado a base de Hierro y Aluminio, pesa aproximadamente 7-1/2 libras. Especifique "EXPL" mas modelo del interruptor en catalogo.

©Copyright 2003 Dwyer Instruments, Inc.
Printed in U.S.A. 7/03
FR# 24-440256-00 Rev. 1

DWYER INSTRUMENTS, INC.
P.O. BOX 373 • MICHIGAN CITY, INDIANA 46361, U.S.A.
Phone: 219/879-8000 www.dwyer-inst.com
Fax: 219/872-9057 e-mail: info@dwyer-inst.com

PECO

AUTOMATION AND CONTROLS

NEMA 4X RAINTIGHT THERMOSTAT INSTALLATION AND OPERATING INSTRUCTIONS

INSTRUCCIONES DE INSTALACION Y OPERACION DEL THERMOSTATO A PRUEBA DE LLUVIA NEMA 4X

THERMOSTAT NEMA 4X ÉTANCHE AUX INTEMPÉRIES INSTRUCTION D'INSTALLATION ET D'UTILISATION

⚠ WARNING

To prevent overheating or fire, use this control as an operating or regulating thermostat. ALWAYS USE A BACKUP CONTROL OR ALARM if a control failure could cause the controlled appliance to overheat or could cause a fire

Where thermostat is capable of cycling directly between heating and cooling loads, failure to provide a load transfer switch will result in thermostat failure.

Do not install, use or operate if product appears damaged, the enclosure is cracked or broken or if the sensor has been bent, crimped or is dirty.

APPROPRIATE APPLICATION

This thermostat has been tested by CSA and Underwriters Laboratories Inc. (UL), meets the requirements for NEMA 4X equipment and is suitable for use under the National Electrical Code (NEC), Article 547-7, when used with appropriate watertight connectors (not included).

INSTALLATION

⚠ WARNING

To avoid electrical shock or damage to equipment, disconnect all power before installing or servicing.

To avoid potential fire and/or explosion, do not use in potentially flammable or explosive atmospheres.

Installation must be made by a trained, qualified service person in accordance with the National Electrical Code (NEC) and all applicable local codes and ordinances. Installation should meet all applicable national, state and local codes. Refer to the appropriate wiring diagram included. Locate the thermostat (local sensing models) or sensing bulb (remote sensing models) for optimum temperature sensing of the controlled space. Thermostat operation will be affected by unusual heat or cold, such as direct sunlight, near windows or doors or on outside walls.

All fittings and materials used for the installation should be approved, suitable and installed properly for the intended application. For water tightness, the cord seal or conduit hub should be UL listed and marked 4X. The conduit hub is to be tightened onto the conduit before installing in the enclosure.

Where applicable, remove knockout(s) by impacting near the inside edge of the knockout to be removed. **IMPORTANT: Do not impact, dent or use the sensor for support. This will cause calibration and/or thermostat failure.**

⚠ WARNING

READ INSTRUCTION CAREFULLY BEFORE ATTEMPTING TO INSTALL, OPERATE OR SERVICE THIS THERMOSTAT. Failure to observe safety information and comply with instructions could result in PERSONAL INJURY, DEATH AND/OR PROPERTY DAMAGE.
Retain these instructions for future reference. This product, when installed, will be part of an engineered system whose specifications and performance characteristics are not designed or controlled by PECO. You must review your application and national and local codes to assure that your installation will be functional and safe.

Even though this thermostat is sealed, water or dust could enter through improperly sealed wiring. A drip loop should be provided to prevent water and other liquids from entering the thermostat housing. The cord or conduit connections to the enclosure must be water and dust tight. The cover must be tightened securely to compress the gasket and provide a watertight seal. Use only screws provided. Do not over-tighten.

Maximum sensing element withstand temperature is 35°F (20°C) above the highest temperature setting. Maximum temperature for the plastic enclosure is 140°F 60°C.

⚠ CAUTION

For use in wet or humid environments or where water tightness is required, failure to use suitable watertight connections and suitable drip loop could allow water to enter the enclosure resulting in thermostat failure.

Use copper wire only. Insulate or wire-nut all unused leads.

Use the grounding provisions provided for connection to the line ground and equipment ground wire.

OPERATION AND CHECK-OUT

Allow one hour or necessary amount of time for the thermostat and system to stabilize for normal operation. This thermostat is factory calibrated and requires no correction on site.

TO CHECK OPERATION OF HEATING SYSTEMS:

1. Disconnect power.
2. Place the heat/cool selector switch, if applicable, in the heat position.
3. Adjust the thermostat set point to at least 10°F (5°C) below the temperature of the controlled space.
4. Restore power.
5. Slowly adjust the thermostat knob to raise the set point. When the set point reaches the approximate temperature of the controlled space, the heating equipment should start.

TO CHECK OPERATION OF COOLING SYSTEMS:

1. Disconnect power.
2. Place the heat/cool selector switch, if applicable, in the cool position.
3. Adjust the thermostat set point to at least 10°F (5°C) above the temperature of the controlled space.
4. Restore power.
5. Slowly adjust the thermostat knob to lower the set point. When the set point reaches the approximate temperature of the controlled space, the cooling equipment should start.

LIMITED WARRANTY

1. WARRANTY COVERAGE. PECO warrants to the original user of its products that the products will. at the date of initial purchase, meet the applicable specification for such products and will be free from any defects in materials or manufacture under normal use for 18 months after date of manufacture.
2. DISCLAIMER OF WARRANTY OF PRODUCT SUITABILITY. PECO makes no warranty to the purchaser or any third party that its products are suitable for a particular application or design. Many states and localities have differing codes or regulations governing the installation and/or use of PECO products. PECO cannot guarantee compliance with such regulations; purchaser is solely responsible for safe and correct installation and use of the product and for compliance with applicable codes and regulations.
3. EXCLUSION OF IMPLIED WARRANTIES. This warranty is the only warranty applicable to this product and excludes all other warranties, including any WARRANTY OF MERCHANTABILITY, any warranty of fitness for a particular purpose, and any implied warranties otherwise arising from course of dealing or usage of trade, except where the product purchased is subject to consumer product warranty laws, in which case ANY APPLICABLE IMPLIED WARRANTIES ARE LIMITED TO 18 MONTHS, or such shorter period as permitted or required under applicable law.
Some States do not allow limitations on how long an implied warranty lasts, so the above limitations may not apply to you.
4. REMEDIES FOR NONCONFORMITY. If the product purchased does not conform to the applicable warranty, PECO will provide, at its option and in accordance with the procedures in the following section, one of the following remedies: (1) repair of the nonconforming product, (2) replacement with a conforming product, (3) refund of the original purchase price, THESE REMEDIES SHALL BE THE EXCLUSIVE AND SOLE REMEDY for any breach of warranty.
5. TO OBTAIN WARRANTY SERVICE. For any product believed to be defective within the limited warranty period, first write or call dealer from whom product was purchased. Dealer will give additional directions. If unable to resolve satisfactorily, write to PECO at the address below, giving dealer's name, address, date and number of dealer's invoice, and describe the nature of the defect.
6. LIMITATION OF LIABILITY. PECO WILL NOT BE LIABLE FOR ANY INCIDENTAL, SPECIAL, INDIRECT OR CONSEQUENTIAL DAMAGES resulting from any defect in the product purchased. Some States do not allow the exclusion or limitation of incidental or consequential damages, so the above limitation or exclusion may not apply to you.

This warranty gives you specific legal rights, and you may also have other rights which vary from State to State.
Manufactured by PECO, Inc.
4709 SE 18th Avenue - Portland, OR 97202 - USA
P.O. Box 82189 - Portland, OR 97282 - USA

⚠ ADVERTENCIA

LEALAS INSTRUCCIONES CUIDADOSAMENTEANTES DE TRATAR DE INSTALAR, OPERAR O HACER EL SERVICIO EN ESTE TERMOSTATO.
Si no se observa la información de seguridad y si no se siguen las instrucciones se pueden producir LESIONES PERSONALES, LAMUERTE Y/O DAÑO A LA PROPIEDAD. Guarde estas instrucciones para referencia en el futuro.Cuando este producto se instale, formará parte de un sistema de ingeniería cuyas especificaciones y características de rendimiento no han sido diseñadas ni son controladas por PECO. Es necesario que estudie su aplicación y los códigos lacales y nacionales para asegurarse que su instalación funcionará bien y es segura.

APLICACION CORRECTA

Este termostato ha sido probado por CSA y por Underwriters Laboratories Inc. (UL), cumple con los requisitos del equipo NEMA 4X y es adecuado para usarse según el Artículo 547-4 del National Electrical Code (NEC), cuando se usa con los conectores impermeables correctos (no vienen incluidos).

INSTALACION

⚠ ADVERTENCIA

Para evitar el choque eléctrico o el daño en el equipo, desconecte toda la energía antes de instalarlo o de hacerle el servicio. Para evitar incendios potenciales y/o la explosión, no lo use en atmósferas potencialmente inflamables o explosivas.

Una persona calificada y capacitada en el servicio tiene que hacer la instalación, según el National Electrical Code (NEC) y según todos los códigos y regulaciones locales. La instalación tiene que cumplir con todos los códigos nacionales, estatales y locales aplicables. Refiérase al diagrama del cableado apropiado que viene incluido.

Ubique el termostato (modelos sensores locales) o la bombilla sensora (modelos sensores remotos) para lograr una percepción óptima de la temperatura del espacio controlado. La operación del termostato se verá afectada por el calor o el frío fuera de lo común, tal como la luz directa del sol, cerca de las ventanas o puertas o en las paredes exteriores.

Todos los accesorios y los materiales que se usan para la instalación tienen que ser aprobados, adecuados y ser instalados correctamente para la aplicación que se les va a dar. El sello del cordón o el cubo del conductor deben estar en la lista de UL y tienen que estar marcados 4X para lograr que sean impermeables. El cubo del conductor tiene que estar apretado en éste antes de instalarlo en la caja.

Cuando sea aplicable, remueva el(los) disco(s) removible(s) golpeando cerca del borde interior del disco removible que se removerá. **IMPORTANTE: no golpee, ni abolle, ni doble, ni use el sensor como soporte. Esto hara fallar la calibracion y/o el termostato.**

⚠ ADVERTENCIA

Para prevenir el sobrecalentamiento o los incendios, use este control solamente como un termostato de operación o regulador. SIEMPRE USE UN CONTROL DE REFUERZO O UNA ALARMA en los casos cuando el artefacto controlado se puede sobrecalentar o se puede producir un incendio si el control falla, Cuando el termostato puede pasar por el ciclo directamente entre las cargas de calefacción y las de enfriamiento, si no se proporciona un interruptor de transferencia de carga, el termostato puede fallar. No instale, ni use, ni opere el producto si parece dañado, si la caja está partida o rota o si el sensor se ha doblado, plegado o esta sucio.

A pesar de que termostato está sellado, el agua o el polvo podrían enrtar a través del cableado mal sellado. Se tiene que proporcionar un ojal de goteo para impedir que el agua u otros líquidos entren en la caja del termostato. Las conexiones del cordón o del conductor que van a la caja tienen que ser impermeables y a prueba de polvo. La cubierta tiene que estar apretada en forma segura para comprimir la empaquetadura y proporcionar el sello impermeable. Use solamente los tornillos que vienen incluidos. No los apriete demasiado.

La temperatura máxima que puede soportar el elemento sensor es 20°C (35°F) sobre el ajuste de temperatura más alto. La temperatura máxima para la caja de plástico es 60°C (140°F).

⚠ PRECAUCION

Para usarlo en ambientes mojados o húmedos o en donde se necesita que sea impermeable, si no se usan las conexiones impermeables correctas y el ojal de goteo correcto, el agua podría entrar en la caja haciendo que el termostato falle. Use cables de cobre solamente, aisle o ponga tuercas de cables en todos los conductores que no están en uso. Use las estipulaciones para la conexión a tierra que vienen incluidas para la conexión a tierra de la línea y con el cable de conexión a tierra del equipo.

OPERACION Y REVISION

Permita una hora o el tiempo necesario para que el termostato y el sistema se estabilicen para la operación normal. Este termostato ha sido calibrado en la fábrica y no necesita corregirse en el lugar en donde se va a usar.

COMO REVISAR LA OPERACION DE LOS SISTEMAS DE CALEFACCION:

1. Desconecte la energía.
2. Ponga el interruptor selector de calefacción/enfriamiento, si es aplicable, en la posición de calefacción.
3. Ajuste el punto de control del termostato a por lo menos 5°C (10°F) por debajo de la temperatura del espacio controlado.
4. Vuelva a conectar la energía.
5. Lentamente ajusté la manilla del termostato para elevar el punto de control. Cuando el punto de control alcance la temperatura aproximada del espacio controlado, el equipo de calefacción debería arrancar.

COMO REVISAR LA OPERACION DE LOS SISTEMAS DE ENFRIAMIENTO:

1. Desconecte la energía.
2. Ponga el interruptor de calefacción/enfriamiento, si es aplicable en la posición de enfriamiento.
3. Ajuste el punto de control del termostato a por lo menos 5°C (10°F) sobre la temperatura del espacio controlado.
4. Vuelva a conectar la energía.
5. Ajuste lentamente la manilla del termostato para bajar el punto de control. Cuando el punto de control alcance la temperatura aproximada del espacio controlado, el equipo de enfriamiento debería arrancar.

GARANTIA LIMITADA

1. COBERTURA DE LA GARANTIA. PECO le garantiza al usuario original de sus productos, que en la fecha de la compra inicial, cumplen con las especificaciones aplicables y no tendrán defectos ni en los materiales ni en la fabricación, si se someten al uso normal, por 18 meses después de la fecha de fabricación.
2. DECLINACION DE RESPONSABILIDAD DE LA GARANTIA POR LA ADAPTACION DEL PRODUCTO. PECO no le garantiza al comprador, ni a terceros, que sus productos se adaptan a una aplicación o diseño en particular. Muchos estados y jurisdicciones cuentan con códigos o regulaciones diferentes que gobiernan la instalación y/o el uso de los productos de PECO. PECO no puede garantizar que se cumplan dichas regulaciones; el comprador es el único responsable por la instalación segura y correcta, por el uso del producto y por el cumplimiento con los códigos y regulaciones aplicables.
3. EXCLUSION DE LAS GARANTIAS IMPLICITAS. Esta garantía es la única que se aplica a este producto y se excluyen todas las demás garantías. incluyéndpse toda GARANTIA DE COMERCIALIZACION, cualquier garantía de adecuación para un propósito en particular y cualquier garantía implícita que de alguna otra forma se presente en el curso de las transac-ciones o uso comercial, excepto en el caso cuando el producto comprado esté sujeto a las leyes de las garantías del producto, en cuyo caso TODA GARANTIA IMPLICITA APLICABLE QUEDA LIMITADA A 18 MESES, o a un período de tiempo más corto, según lo permita o lo exija la ley aplicable.
Algunos estados no permiten limitaciones en cuanto a la duración de las garantías implícitas, de modo que las limitaciones anteriores puede que no se apliquen en su caso.
4. RECURSOS EN EL CASO DE DISCONFORMIDAD. Si el producto comprado no está de acuerdo con la garantía aplicada, PECO proporcionará, a su discreción, y según los procedimientos de la sección siguiente, uno de los recursos siguientes: (1) reparación del producto en disconformidad, (2) lo cambiará por uno conforme, (3) reembolsará el precio de compra original. ESTOS RECURSOS SERAN LOS UNICOS Y EXCLUSIVOS en el caso de cualquier violación de la garantía.
5. COMO OBTENER SERVICIO DEBIDO A LA GARANTIA. En el caso de que se crea que cualquier poducto tenga defectos, dentro del período cubierto por la garantía limitada, primero escriba o llame al distribuidor a quien se le compró el producto. El distribuidor le dará las instrucciones adicionales. Si no se puede resolver la situación en forma satisfactoria, escriba a PECO a la dirección a continuación, dando el nombre y la dirección del distribuidor, la fecha y el número de la factura del distribuidor y describa la naturaleza del defecto.
6. LIMITACION DE RESONSABILIDAD. PECO NO SERA RESPONSIBLE POR DAÑOS CONCOMITANTES. ESPECIALES, INDIRECTOS O EMERGENTES que surjan por cualquier defecto del producto comprado. Algunos estados no permiten la exclu-sión o la limitación de los daños concomitantes o emergentes, de modo que la limitación o exclusión anteriores puede que no se apliquen en su caso.

Esta garantía le otorga derechos legales específicos y puede que también tenga otros derechos que varían de Estado a Estado.

Fabricado por PECO, Inc.
4709 SE 18th Avenue - Portland, OR 97202 - USA
P.O. Box 82189 - Portland, OR 97282 - USA

© COPYRIGHT 2002 PECO, Inc. ALL RIGHTS RESERVED

⚠ AVERTISSEMENT

LIRE ATTENTIVEMENT LES INSTRUCTIONS AVANT DE COMMENCER À INSTALLER, UTILISER OU FAIRE LE SERVICE DE CE THERMOSTAT. Négliger d'observer les conseils de sécurité et d'appliquer les instructions peut être la cause de BLESSURES CORPORELLES, MORT ET/OU DOMMAGES MATÉRIELS. Conserver ces instructions pour références ultérieures. Quand il est installé, cet appareil fera partie d'un système indutriel dont les spécifications et les caractéristiques de rendement ne sont pas concues ou contrôlées par PECO. L'application et les codes nationaux et locaux doivent être revus pour assurer que l'installation sera fonctionnelle et sans danger.

APPLICATION APPROPRIÉE

Ce thermostat qui a été soumis aux tests de CSA et de Underwriters Laboratory, Inc, (UL) est en accord avec les conditions requises pour les équipements NEMA 4X et est acceptable pour usage sous les normes National Electrical Code (NEC), Article 547-4, quand utilisé avec les connecteurs étanches appropriés (pas inclus).

INSTALLATION

⚠ AVERTISSEMENT

Pour éviter les chocs électriques ou les dommages matériels, débrancher l'alimentation électrique avant d'installer ou de faire le service.
Pour éviter un incendie et/ou une explosion possible, ne pas utiliser dans un environnement potentiellement inflammable ou explosif.

L'installation doit être faite par un technicien de service qualifié et être en accord avec le National Electrical Code (NEC) et tous les codes nationaux et locaux applicables. Se reporter au diagramme de câblage approprié inclus.

Situer le thermostat (modèles à détection sur place) ou la sonde (modèles à détection éloignée) pour obtenir une détection optimum de la température de l'espace contrôlé. Le fonctionnement du thermostat est affecté par une chaleur ou un froid inhabituel, tel que l'exposition directe au soleil, près d'une fenêtre, un porte ou un mur extérieur.

Tous les raccords et matériaux utilisés pour l'installation doivent être approuvés, adaptés et correcternent installés en fonction de l'application prévue. Pour l'étanchéité, le joint du câble ou raccord de conduit doit être classé UL et être marqué 4X. Le raccord de conduit doit être fixé sur le conduit avant de l'installer dans le boîtier.

Si applicable, les parties éjectables doivent être retirées par impact près du bord intérieur de la partie éjectable qui doit être retirée. IMPORTANT: NE PAS TAPER, ÉBRÉCHER, TORDRE OU UTILISER LA SONDE COMME SUPPORT. CECI CAUSERAIT LA DÉFAILLANCE DU CALIBRAGE ET/OU DU THERMOSTAT.
SONDE COMME SUPPORT. CECI CAUSERAIT LA DÉFAILLANCE DU CALIBRAGE ET/OU DU THERMOSTAT.

⚠ AVERTISSEMENT

Pour éviter la surchauffe ou le feu, utiliser ce contrôle uniquement comme un thermostat de fonctionnement ou de réglage. TOUJOURS UTILISER UN CONTRÔLE OU UNE ALARME DE REDONDANCE si une défaillance du contrôle pourrait causer la surchauffe de l'appareil contrôlé ou pourrait causer un incendie. Si le thermostat est capable d'entrer en cycle directement entre des charges de chauffage et de refroidissement, négliger d'installer un commutateur de transfert de charge résultera en défaillance du thermostat. Ne pas installer, utiliser ou faire fonctionner si l'appareil semble endommagé, si le boîtier est fendu ou cassé, ou si la sonde a été tordue, pilée ou est sale.

Bien que ce thermostat soit scellé, l'eau ou la poussière peuvent y entrer par un câblage mal étanchéifié. Une boucle d'égouttage doit être prévue pour empêcher l'eau ou tout autre liquide d'entrer dans le boîtier du thermostat. La connexion de câble ou de conduit avec le boîtier doit être hermétique à l'eau et à la poussière. Le couvercle doit être solidement fixé pour compresser le joint et créer l'étanchéité. Utiliser uniquement les vis fournies. Ne pas surserrer.

L'élément de sonde maximum peut supporter une température de 20°C (35°F) au-dessus du réglage de la plus haute température. La température maximum pour le boîtier plastique est de 60°C (140°F).

⚠ ATTENTION

Pour usage dans un environnement mouillé ou humide ou si l'étanchéité est requise, négliger d'utiliser des connexions adaptées pour l'étanchéité et une boucle d'égouttage appropriée pourrait permettre la pénétration d'eau dans le boîtier et causer la défaillance du thermostat.

Utiliser uniquement des fils de cuivre, isoler ou placer sous cônes d'isolation tous les conducteurs inutilisés. Utiliser les bornes de mise à la terre prévues pour connexion sur la ligne de prise de terre et le fil de terre de l'équipement.

FONCTIONNEMENT ET VÉRIFICATION

Attendre une heure ou la période de temps nécessaire pour que le systéme et le thermostat se stabilisent sur un fonctionnement normal. Ce thermostat a été calibré à l'usine et il ne nécessite aucun ajustement sur place.

POUR VÉRIFIER LE FONCTIONNEMENT DES SYSTÈMES DE CHAUFFAGE:

1. Débrancher l'alimentation électrique
2. Si applicable, place le sélecteur chaud/froid sur la position "chaud".
3. Ajuster le réglage du thermostat sur un point au moins 5°C (10°F) au-dessous de la température de l'espace contrôlé.
4. Rebrancher l'alimentation életrique.
5. Ajuster lentement la molette du thermostat pour monter le point de réglage. Quand le oint de réglage atteint le température approximative de l'espace contrôlé, l'équipement de chauffage doit se mettre en marche.

POUR VÉRIFIER LE FONCTIONNEMENT DES SYSTÈMES DE REFROIDISSEMENT:

1. Débrancher l'alimentation électrique.
2. Si applicable, placer le sélecteur chaud/froid sur la position "froid".
3. Ajuster le réglage du thermostat sur un point au moins 5°C (10°F) au-dessos de la température de l'espace contrôlé.
4. Rebrancher l'alimentation électrique.
5. Ajuster lentement la molette du thermostat pour descendre le point de réglage. Quand le point de réglage atteint le température approximative de l'espace contrôlé, l'équipement de climatisation doit se mettre en marche.

GARANTIE LIMITÉE

1. COUVERTURE GARANTIE. PECO garantit au premier utilisateur de ses produits, que les produits sont, à la date de l'achat initial, en accord avec les spécifications applicables pour ces productions et seront, sous usage normal, sans défauts de matières premières ou de main d'oeuvre pendant 18 mois à partir de la date de fabrication.
2. DÉSISTEMENT DE GARANTIE D'APTITUDE DU PRODUIT. PECO ne donne aucune garantie à l'acheteur ou à toute autre tierce personne concernant l'adaptabilité de ses prodeits poueune application ou une conception particulière. De nombreuses juridictions ont des codes différents ou des règlements gouvernant l'installation et/ou l'usage des produits de PECO. PECO ne peut pas garantir l'observance de ces règlements, l'acheteur est seul responsable de installation et de l'usage correct et sans danger de ce produit ainsi que de l'observance des codes et règlements applicables.
3. EXCLUSION DE GARANTIES IMPLIQUÉES. Cette garantie est la seule applicable à ce produit, et elle exclue toutes autres garanties, compris toute GARANTIE DE COMMERCIALISATION, toute garantie d'adaptabilité à un usage particulier, et toutes garanties impliquées au cours de transactions commerciales, sauf là où le produit acheté est soumis aux lois de garantie de produit aux consommateurs, dans tous les cas TOUTES GARANTIES IMPLIQUÉES APPLICABLES SONT LIMITÉES À 18 MOIS, ou à une période Plus courte si permise ou requise par la loi applicable.
Certaines juridictions ne permettent de limitations de la durée de la garantie, donc les limitations ci-dessus peuvent ne pas s'appliquer dans le cas présent.
4. REMÈDES CONTRE LA NON-CONFORMITÉ. Si le produit acheté n'est pas conforme à la garantie applicable, PECO fournira, à son choix et en accord avec le processus de la section suivante, l'un des remèdes suivants : (1) réparation du produit non-conforme. (2) remplacement par un produit conforme. (3) remboursement du prix d'achat d'origine. CES REMÈDES SERONT LES REMÈDES SEULS ET EXCLUSIFS pour toute infraction à la garantie.
5. POUR OBTENIR LE SERVICE SOUS GARANTIE. Pour tout produit considéré défectueux au cours de la période couverte par la garantie, commencer par écrire ou appeler le concessionnaire chez qui le produit a été acheté. Le concessionnaire doit donner des directions additionnelles. Si un accord satisfaisant ne peut pas être obtenu, écrire à PECO à l'adresse ci-dessous, en donnant le nom et l'adresse du concessionnaire, la date et le numéro de la facture du concessionnaire et en décrivant la nature du défaut.
6. LIMITATION DE RESPONSABILITÉ. PECO NE SERA PAS RESPONSABLE DE TOUS DOMMAGES IMPRÉVUS, SPÉCIAUX, INDIRECTS OU FORTUITS résultant d'un produit acheté défectuex. Certaines juridictions ne permettent pas l'exclusion ou la limitation des dommages indirects ou fortuits, donc la limitation ou exclusion ci-dessus peut ne pas s'appliquer dans le cas présent.

Cette garantie donne des droits légaux spécifiques, et il peut y avoir d'autres droits variants de juridiction à juridiction.

Fabriqué par PECO, Inc.
4709 SE 18th Avenue - Portland, OR 97202 - USA
P.O. Box 82189 - Portland, OR 97282 - USA

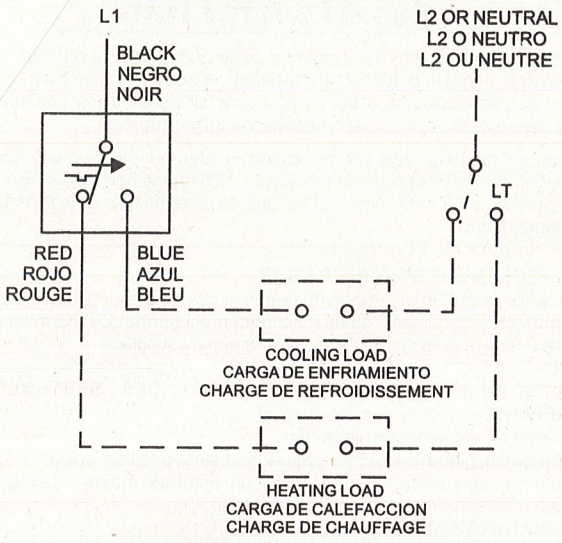

T115 TA119 TC109 TC119

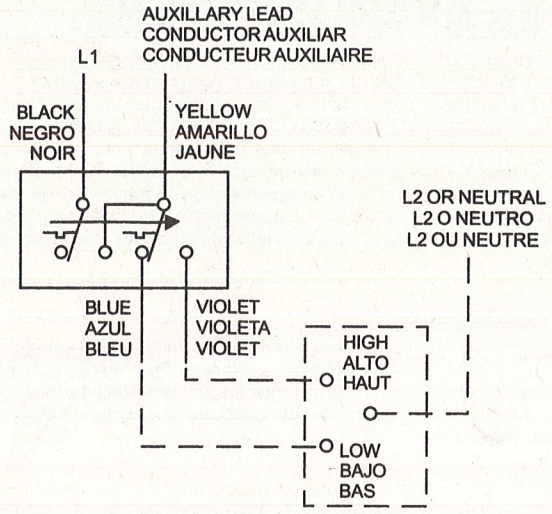

TJ109 MODELS

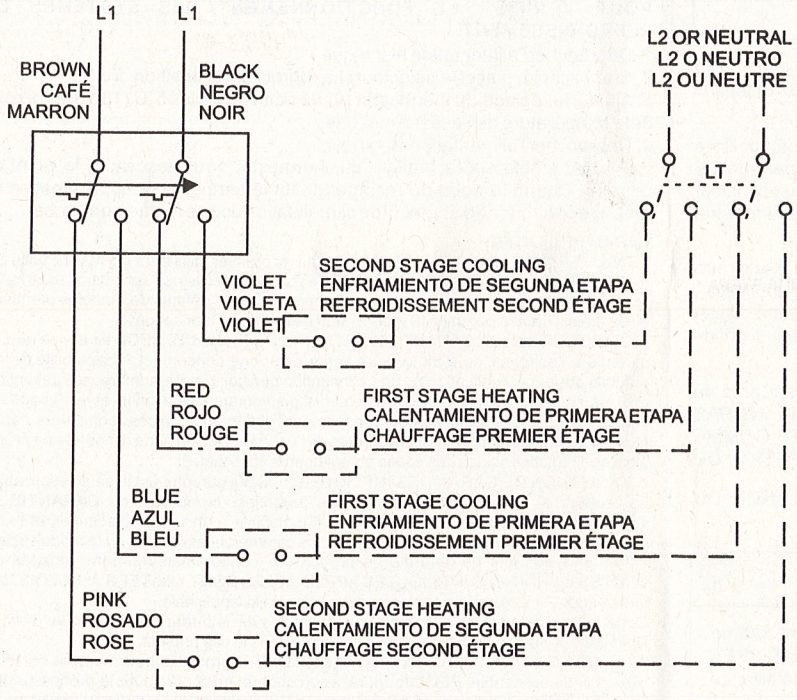

TH109

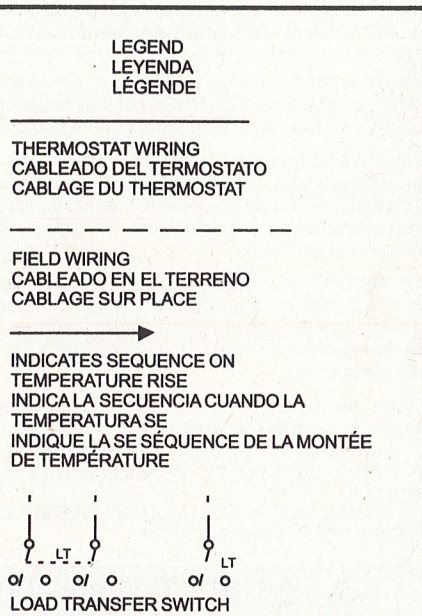

⚠ WARNING
ADVERTENCIA
AVERTISSEMENT

-TO INSURE WATER TIGHTNESS, THE ENCLOSED GASKET MUST BE INSTALLED UNDER THE WIRING CAP.

-PARA ASEGURAR LA ESTANQUIDAD AL AGUA, LA JUNTA SUMINISTRADA DEBERÁ INSTALARSE DEBAJO DEL CASQUETE DEL ALAMBRADO.

-POUR ASSURER L'ÉTANCHÉITÉ À L'EAU, LE JOINT STATIQUE (FOURNI) DOIT ÊTRE INSTALLÉ SOUS LE CULOT POUR CÂBLAGE.

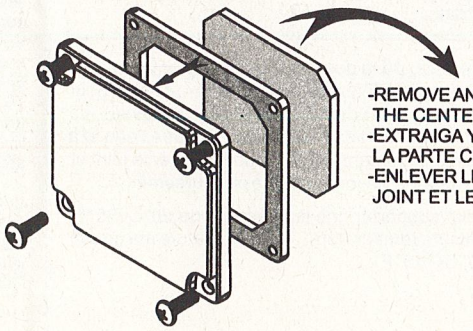

-REMOVE AND DISCARD THE CENTER OF THE GASKET
-EXTRAIGA Y DESCARTE LA PARTE CENTRAL DE LA JUNTA
-ENLEVER LE CENTRE DU JOINT ET LE METTRE AU REBUT

© COPYRIGHT 2002 PECO, Inc. ALL RIGHTS RESERVED

The Cosy 131 User Guide

USER MANUAL

UM-0004-00 EN 1.1 ENGLISH

Connecting Devices™

Important User Information

Liability

Every care has been taken in the preparation of this document. Please inform HMS Industrial Networks SA of any inaccuracies or omissions. The data and illustrations found in this document are not binding. We, HMS Industrial Networks SA, reserve the right to modify our products in line with our policy of continuous product development. The information in this document is subject to change without notice and should not be considered as a commitment by HMS Industrial Networks SA. HMS Industrial Networks SA assumes no responsibility for any errors that may appear in this document.

There are many applications of this product. Those responsible for the use of this device must ensure that all the necessary steps have been taken to verify that the applications meet all performance and safety requirements including any applicable laws, regulations, codes, and standards.

HMS Industrial Networks SA will under no circumstances assume liability or responsibility for any problems that may arise as a result from the use of undocumented features, timing, or functional side effects found outside the documented scope of this product. The effects caused by any direct or indirect use of such aspects of the product are undefined, and may include e.g. compatibility issues and stability issues.

The examples and illustrations in this document are included solely for illustrative purposes. Because of the many variables and requirements associated with any particular implementation, HMS Industrial Networks SA cannot assume responsibility for actual use based on these examples and illustrations.

Intellectual Property Rights

HMS Industrial Networks SA has intellectual property rights relating to technology embodied in the product described in this document. These intellectual property rights may include patents and pending patent applications in the USA and other countries.

Table of Contents

Page

1 Preface 3

1.1 About This Document 3
1.2 Document history 3
1.3 Related Documents 3
1.4 Trademark Information 3

2 Requirements 4

2.1 Hardware 4
2.2 Software 4

3 Get in Touch with the Cosy 131 5

3.1 Talk2M account configuration 5
3.2 Assigning an IP Address 5
3.3 Accessing the Web Configuration Interface 6

4 Quick Launch Wizard 7

4.1 System Wizard 7
4.2 Internet Wizard 9
4.3 Talk2M Wizard 16

5 Home Section 18

6 Ready to establish the remote connection to your eWON 20

7 DI Config Wizard 21

7.1 Remote Access Control 21
7.2 DI Alarm Notification 22

8 Wan fallback 24

9 Diagnostic and Setup 26

This page intentionally left blank

1 Preface

1.1 About This Document

This document presents the features of the eWON Cosy 131 and explains briefly the steps to take to get a functional Cosy 131.

For additional related documentation and file downloads, please visit www.ewon.biz/support.

1.2 Document history

Version	Date	Description
1.0	2018-05-03	First release
1.1	2018-08-29	Added: NTP Client / Server Added: Anybus Bolt Configuration Added: Easy APN

1.3 Related Documents

Document	Author	Document ID
eBuddy	HMS	AUG-0063-00
Talk2M	HMS	AUG-0028-00
eCather Mobile	HMS	AUG-0072-00
M2Web	HMS	AUG-0058-00
Wan Fallback	HMS	KB-0286-00

1.4 Trademark Information

eWON® is a registered trademark of HMS Industrial Networks SA. All other trademarks mentioned in this document are the property of their respective holders.

2 Requirements

2.1 Hardware

This guide presents the features of the Cosy 131 which is used for remote access your devices.

2.2 Software

The Cosy 131 is configured through its web interface which is accessible with any modern web browser. The recommended platforms are:

- Firefox 15 and higher.
- Chrome 16 and higher.
- Safari 11 and higher.
- Edge 13 and higher.

eBuddy

The companion tool eBuddy assists with initial IP address configuration for the Cosy 131 and with maintenance tasks such as upgrading firmware, creating/restoring backups...

Download eBuddy.

eCatcher

The companion tool eCatcher is required if the Cosy 131 will connect to the Talk2M infrastructure; It also allows to create and setup a Talk2M account.

Download eCatcher.

3 Get in Touch with the Cosy 131

3.1 Talk2M account configuration

To allow the remote access the Cosy 131 needs to be connected to the Talk2M infrastructure. Talk2M offers a secured and easy to set up remote connection over the Internet.

To configure the Talk2M account:

1. Download and install eCatcher companion tool,*eCatcher, p. 4* .
2. Start eCatcher and log into your Talk2M account, in case you do not have one yet; click on *Create a Free + Account* and follow the prompts on the screen. Once the Talk2M account is created, an email will be sent with the activation and instructions.
3. Click on the icon + *Add* to join the Cosy 131 to your Talk2M account.
4. Follow the screen prompts. *Be aware that some options require the full telephone number County Code included*.
5. The last step of the wizard, copy the *Activation Key* to the clipboard to use it later on the Talk2M wizard.

Now, the Cosy 131 is successfully on the *eWON list*.

3.2 Assigning an IP Address

It is important to understand why you need to give an appropriate IP address to your Cosy 131 if you want to avoid any conflict on your network.

The first communication with the Cosy 131 can be established using the companion tool eBuddy (check *Software, p. 4* for more details about eBuddy).

To change the IP address of the Cosy 131:

1. Connect the port labeled **LAN** (port #1) of the Cosy 131.

   This can be done either to the computer point-to-point or through a network if the default IP of the Cosy 131 which is 10.0.0.53 will not conflict with another connected device.

2. Start the eBuddy application.

   The application scans through the Ethernet adapter network and identifies the connected eWON devices displaying the IP address, subnet mask and serial number.

   The utility also allows the modification of the default IP address without necessarily being in the same network range.

3. Optional: Highlight the row representing the device to be modified.
4. Click on the button *Set IP* from the top bar menu.
5. Indicate the serial number of the Cosy 131 to be modified. Click *Next*.
6. Enter the new IP address and its subnet mask. By clicking *Next*, eBuddy sends the commands to the Cosy 131 to change its IP address and to reboot.
7. Once the reboot completes, the Cosy 131 will be accessible at its new IP address.

3.3 Accessing the Web Configuration Interface

The configuration of the Cosy 131 can be done using its internal web pages.

While the computer is connected to a LAN port of the Cosy 131, open an Internet browser and enter the LAN IP address of the Cosy 131 into the address field. If the computer is not in the same network address range as the Cosy 131, its web pages can be reached using the “EZ DHCP” feature of the eBuddy utility. For more information, refer to.eBuddy from the *Related Documents, p. 3*

Before beginning the configuration of the Cosy 131, authentication is required. The default login and password are both “adm”.

> **!** For security reasons, the default password must be changed.

The password can be changed through the *System Wizard* described below.

At the first boot of the Cosy 131 or after a reset level 2 and after successfully logging in, a prompt will appear to set the interface language.

After the interface language is selected, a configuration wizard is proposed to permit a quick configuration of the system and communication settings of the Cosy 131. On later connections, the configuration wizard is accessible through the *Wizards* button in the upper right corner.

4 Quick Launch Wizard

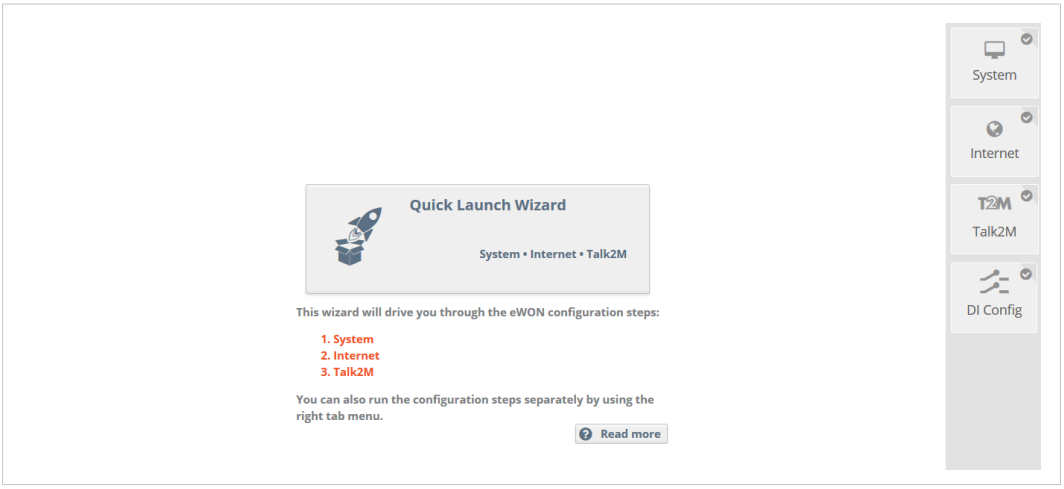

Fig. 1 Quick Launch Wizard Button

The Quick launch wizard will guide you through the different setup wizards to configure your Cosy for remote connection trough Talk2M:

- The *System Wizard* configures basic system settings such as the date & time and the default username & password.
- The *Internet Wizard* configures the WAN communication settings for the Cosy 131.
- The *Talk2M Wizard* establish a VPN between the Cosy 131 and the Talk2M infrastructure.

4.1 System Wizard

The *System Wizard* configures basic system settings.

On the first screen of the *System Wizard*, enter the eWON name.

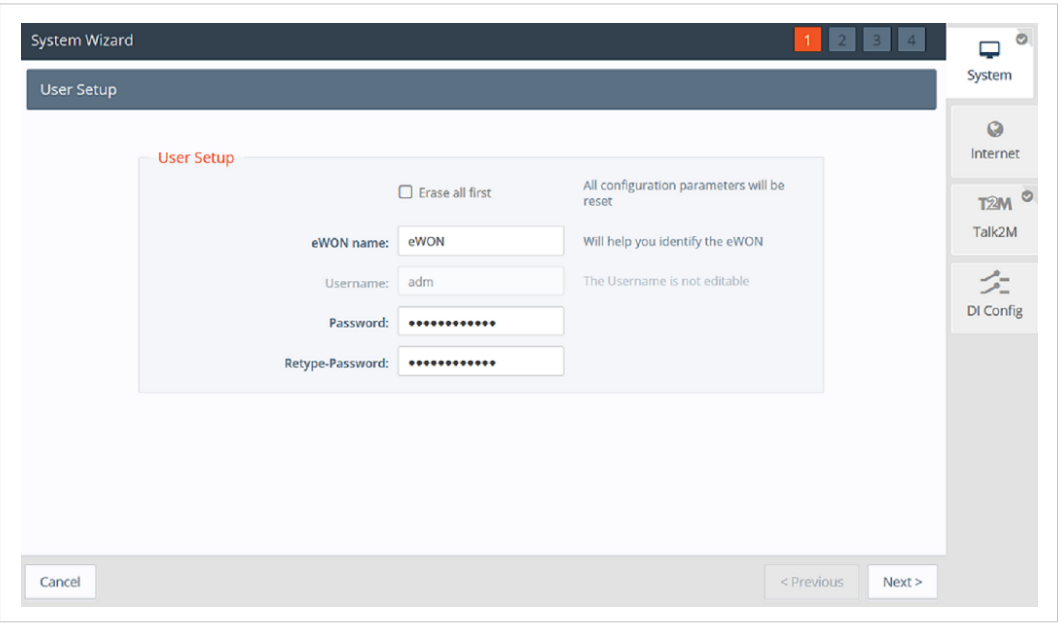

Fig. 2 System Wizard User Setup

> **!** For security reasons, it is required to change the default password for the adm user.

On the second screen of the *System wizard*:

- Configure the accurate *date and time* settings. For Talk2M communication, the date of the Cosy 131 must be correct.
- Configure the *Timezone* settings, click either on the arrow or the map icon.
- The URL of the remote NTP server. By default, “ntp.talk2m.com is set” This field is shown only if “Update clock via NTP” is selected.
- The time interval used to update the clock. This field is shown only if “Update clock via NTP” is selected.

Click *Next* to proceed to the next screen.

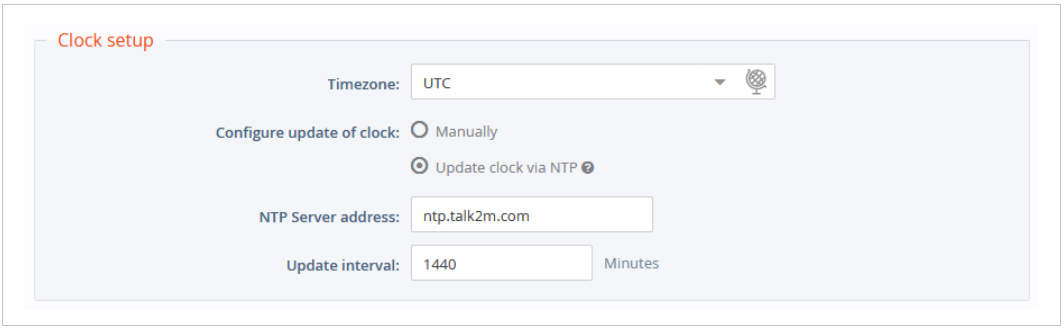

Fig. 3 System Wizard Date and Time

The third screen of the *System Wizard* shows the standard attribution of the four port Ethernet switch of the Cosy 131.

The ports #1, #2, #3, will be dedicated to LAN *local access* network and port #4 will be dedicated WAN *Internet access* network.

The attribution of a port can be easily recognized by its LED color:

- Orange for a WAN port.
- Green for a LAN port.

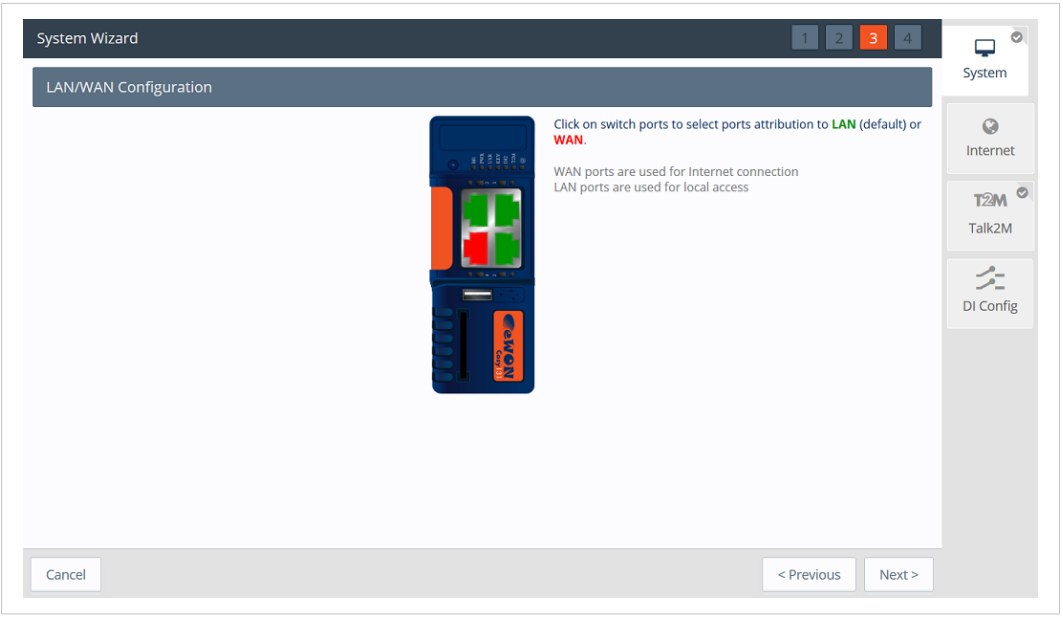

Fig. 4 System Wizard LAN/WAN Configuration

Click *Next* to finish the *System Wizard* settings.

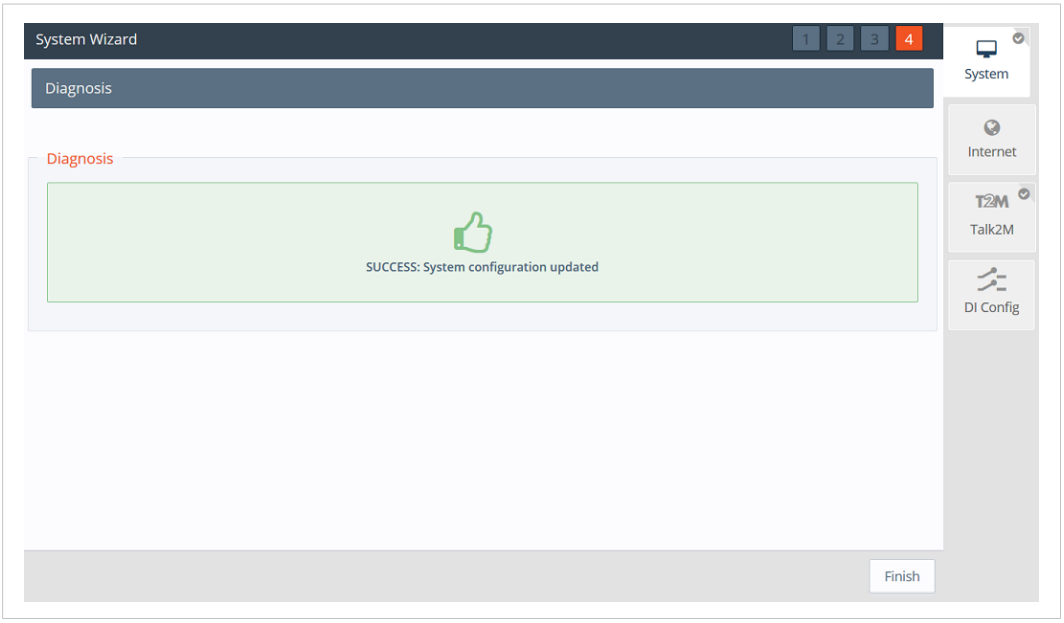

Fig. 5 System Wizard Diagnosis

4.2 Internet Wizard

The Internet Wizard configures the Internet settings for the Cosy 131. The Interface field allows to select which interface will be in use for the Internet connection:

- Ethernet WAN connection
- Cellular Modem
- Wi-Fi Connection

The following chapter will explain the Ethernet WAN connection, which is the most common connection and available among all Cosy models. The different settings for the cellular and Wi-Fi connection will be explained in next chapters.

4.2.1 Ethernet WAN Configuration

- Select the Ethernet Internet connection.

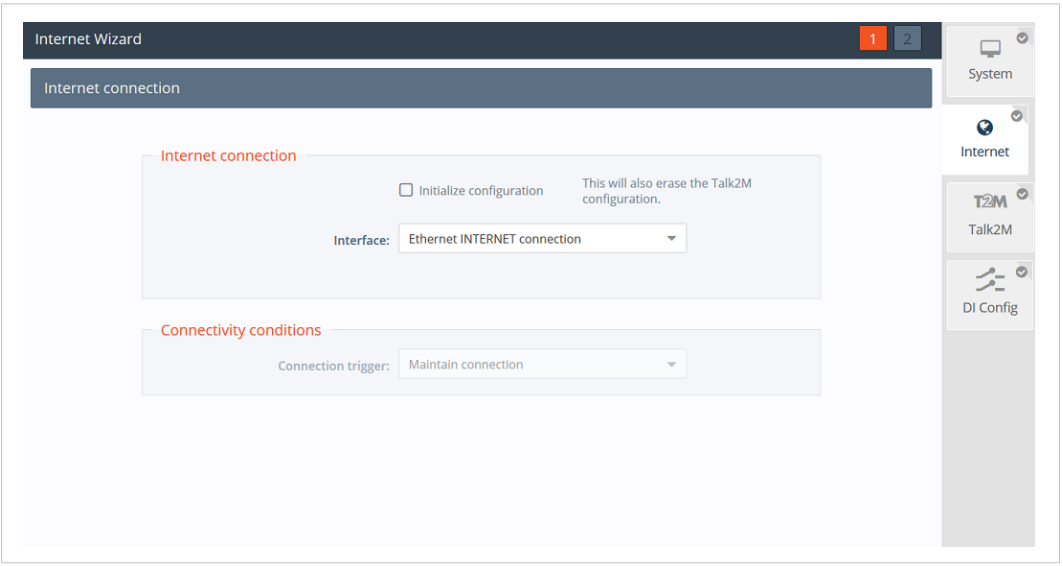

Fig. 6 Internet Wizard Connection Setup

Click *Next* to continue the WAN interface configuration.

- Select *DHCP* from the dropdown to receive an IP automatically from the LAN network. If needed select *Static or BootP* options according to the LAN network configuration.

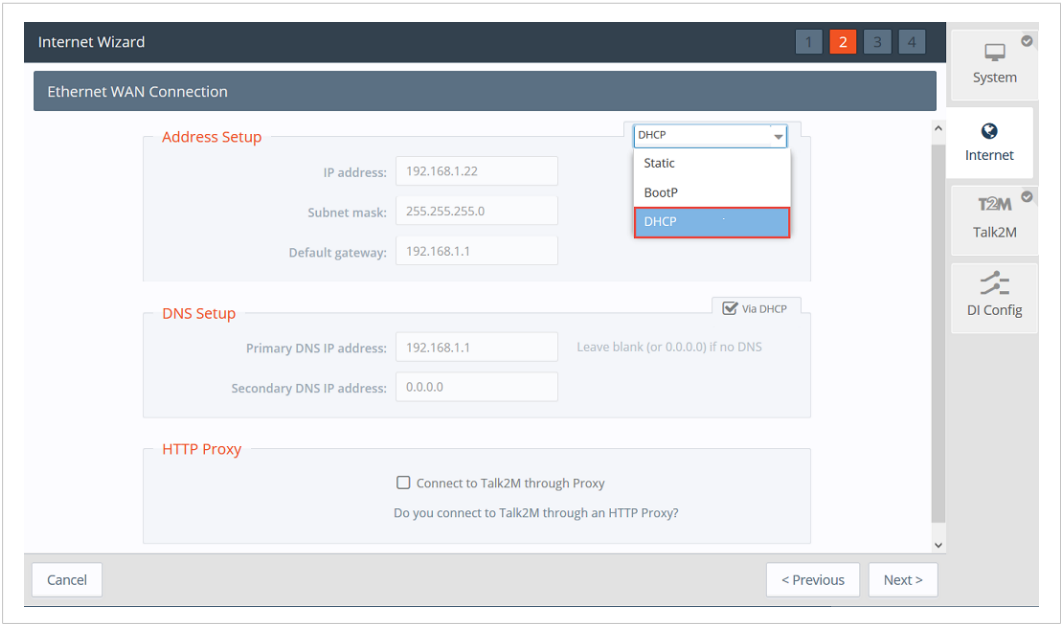

Fig. 7 Internet Wizard Ethernet WAN Connection Setup

Click *Next* to proceed to the next screen.

- The *Internet connection test* is enabled by default, it allows the Cosy 131 to verify the Internet connection. If this network uses a proxy server or if port 80 is closed for outbound connections, uncheck this option.

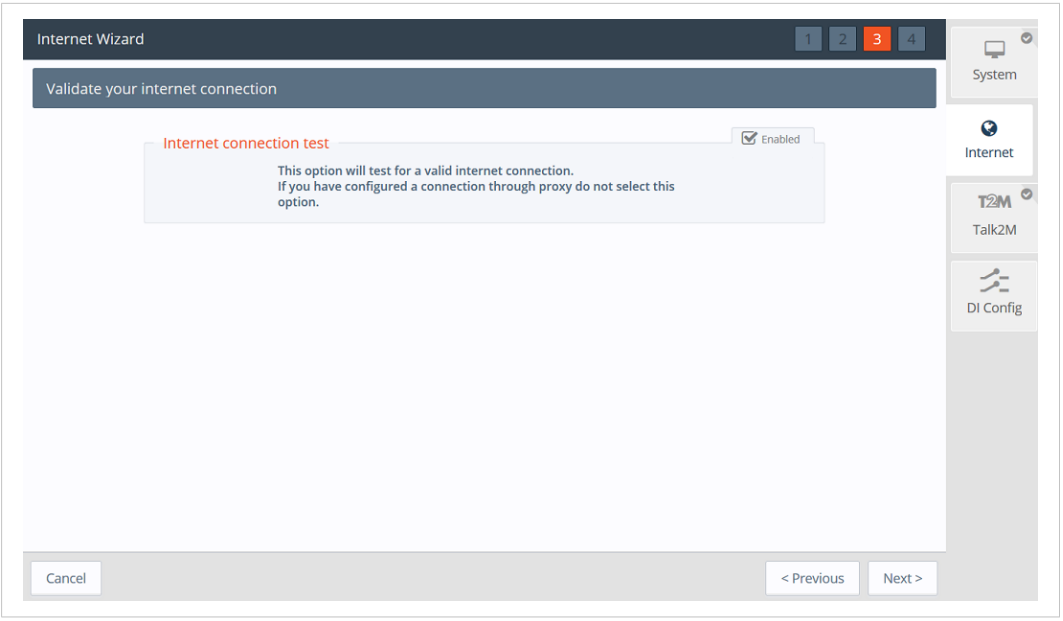

Fig. 8 Internet Wizard Validation

Click *Next* to apply the configuration changes.

Once the wizard completes successfully, the Cosy 131 is connected to the primary WAN network.

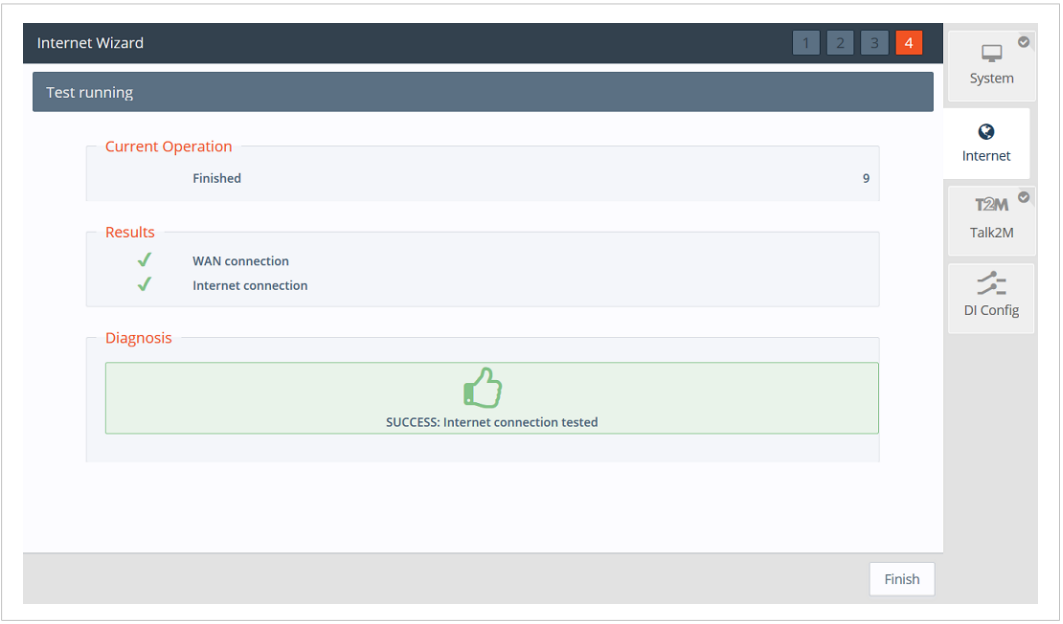

Fig. 9 Internet Wizard Test

4.2.2 Cellular Network Configuration

Instead of using the *WAN Ethernet connection* for the Internet connection, if your Cosy 131 embeds a cellular modem, you can also use the modem for the Internet connection .

- Select *Maintain connection* to keep the Cosy 131 connected to Internet permanently or select *Send SMS to activate* to activate the remote access only after receiving an SMS.

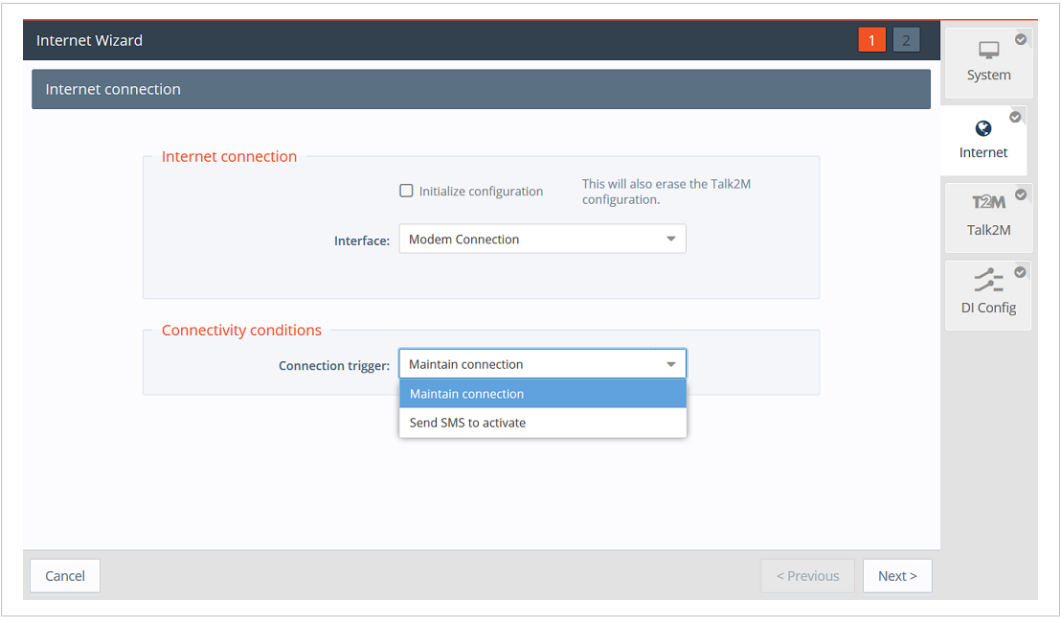

Fig. 10 Internet Wizard Connection Setup

- Configure the SIM card pin code.
- Select the country of the SIM card
- Select the operator of the SIM card
- The wizard will propose *Access Point Name* APN according to the country and operator selected. If the APN is not in the proposed list, select Custom APN and type the desired APN manually. Be aware that some operators have different APN for the same local area.
- If required, enter the APN *Username* and *Password*, otherwise leave this field empty. Double check with your operator to enter the correct information.
- In case of specific connection settings such as network type or preferred provider; check the *Show advance options* checkbox

Click *Next* to apply the configuration changes.

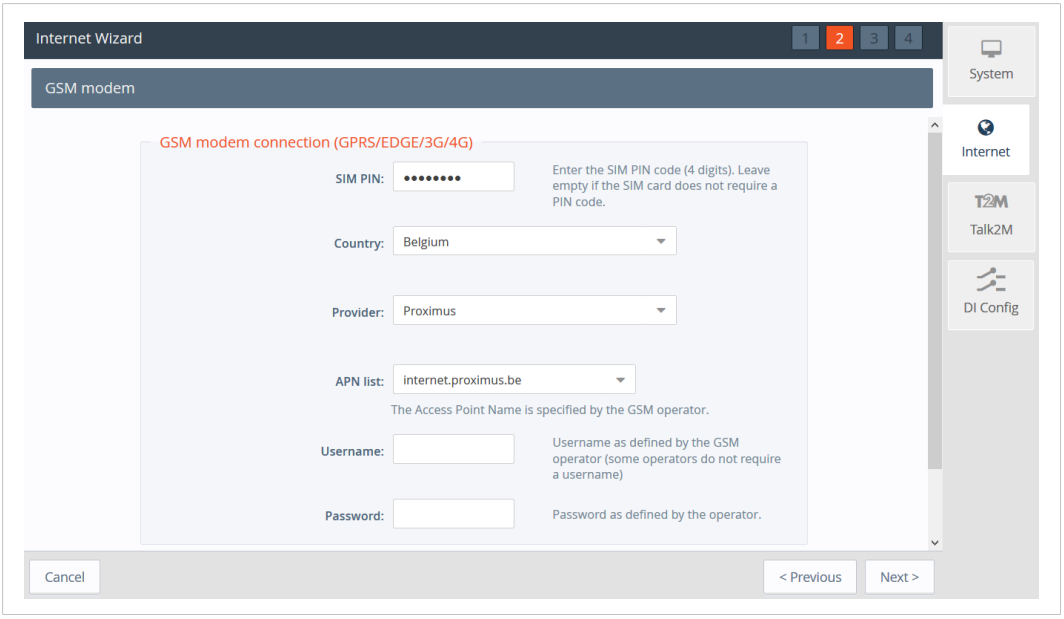

Fig. 11 Internet Wizard GSM Modem

Once the wizard completes successfully, the Cosy 131 is connected to the Cellular WAN network.

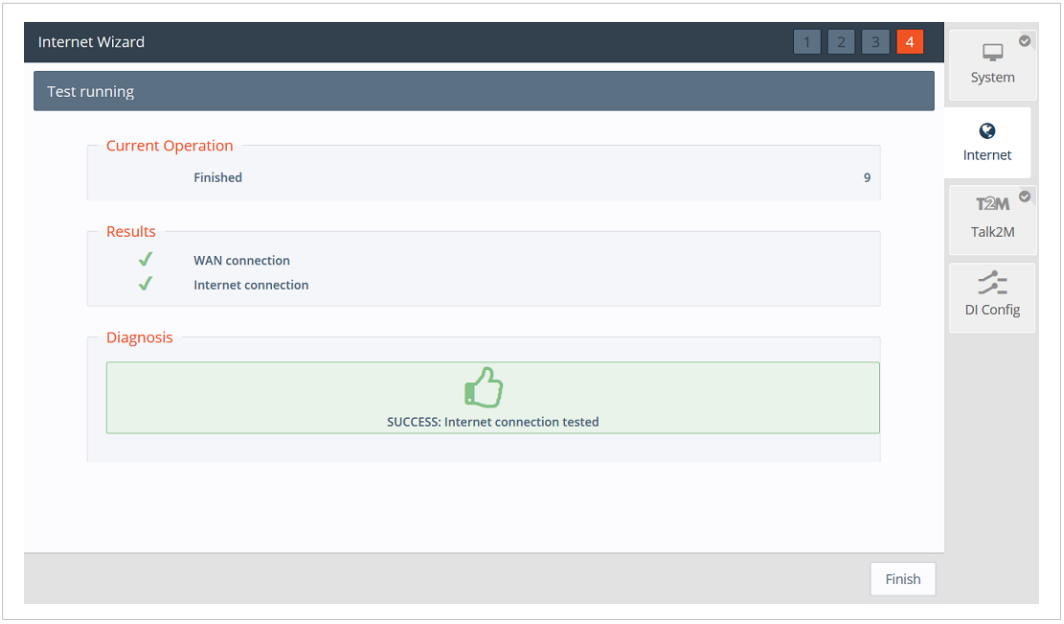

Fig. 12 Internet Wizard Test

4.2.3 Wi-Fi Network Configuration

Instead of using the WAN Ethernet connection for the Internet connection, if your Cosy 131embeds a cellular modem, you can also use the modem for the Internet connection.

- Select the connectivity conditions accordingly

Click *Next* to proceed to the next screen.

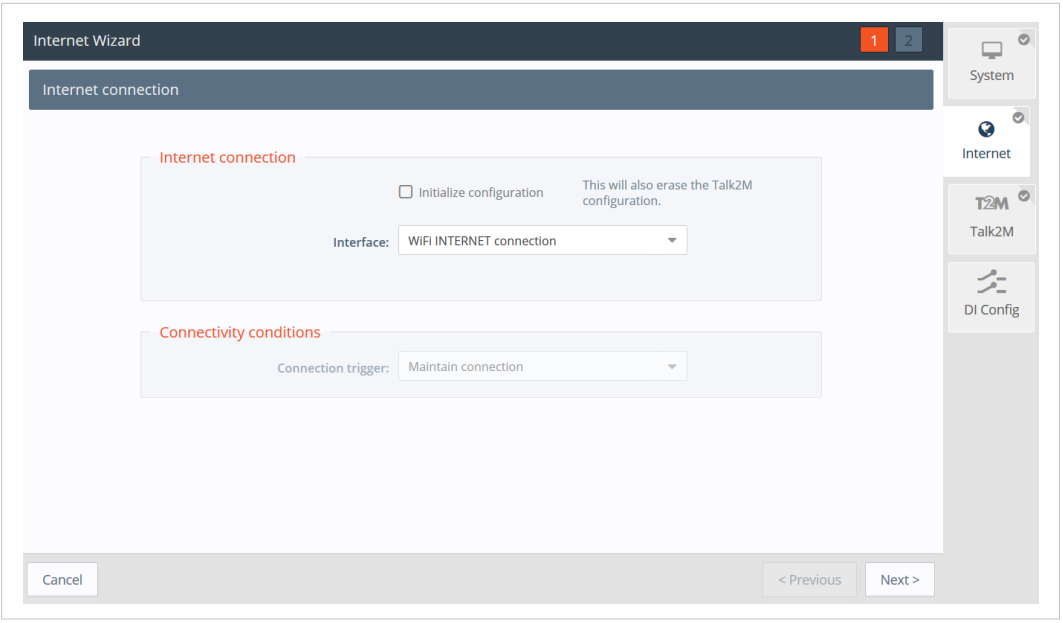

Fig. 13 Internet Wizard Connection Setup

- Select the Wi-Fi network to connect and enter the password.
- Keep the *DHCP* default settings for the Wifi WAN Connection and DNS, unless otherwise required by the local IT department.
- In case of specific proxy connection settings; check the *Connect to Talk2M through proxy* checkbox

Click *Next* to apply the configuration changes.

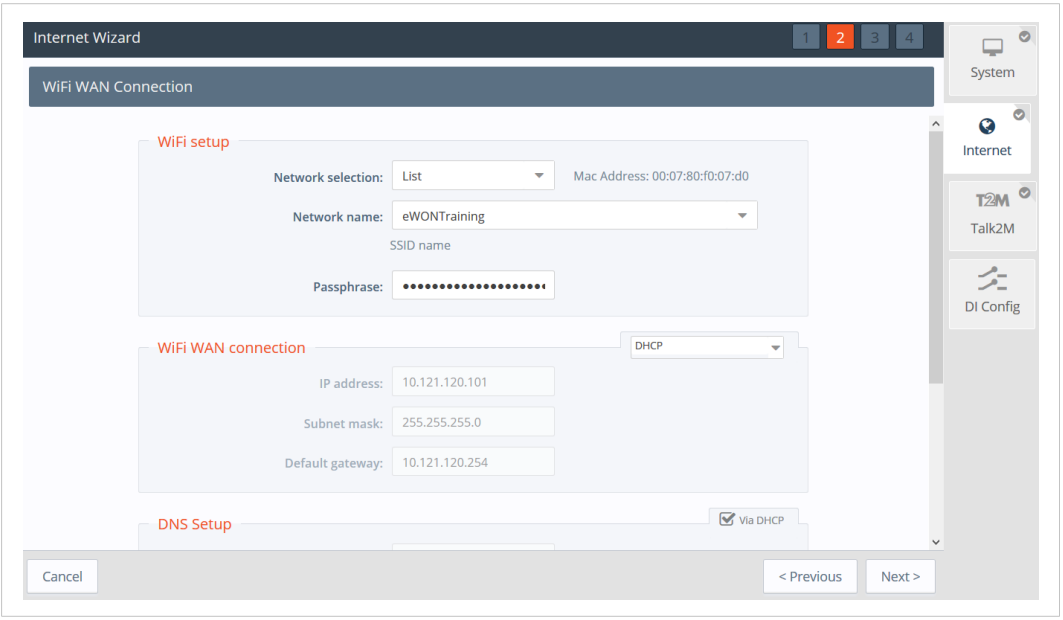

Fig. 14 Internet Wizard Wifi Setup

Click *Next* to proceed to the next screen.

- The *Internet connection test* is enabled by default, it allows the Cosy 131 to verify the Internet connection. If this network uses a proxy server or if port 80 is closed for outbound connections, uncheck this option.

Click *Next* to apply the configuration changes.

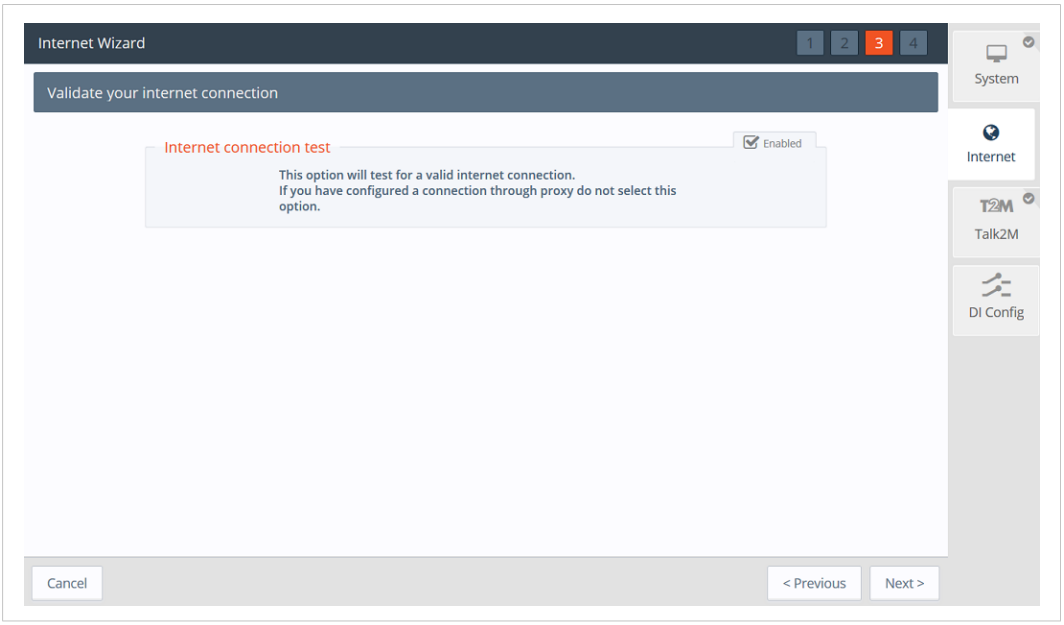

Fig. 15 Internet Wizard Wifi Validation

4.3 Talk2M Wizard

The *Talk2M Wizard*, configures the VPN connection between the Cosy 131 and your Talk2M account on the Talk2M server..

- On the first screen of the *Talk2M Wizard*, select *Register with Activation Key* option
- Paste the *Activation Key* .

Click *Next* to move forward to the next screen.

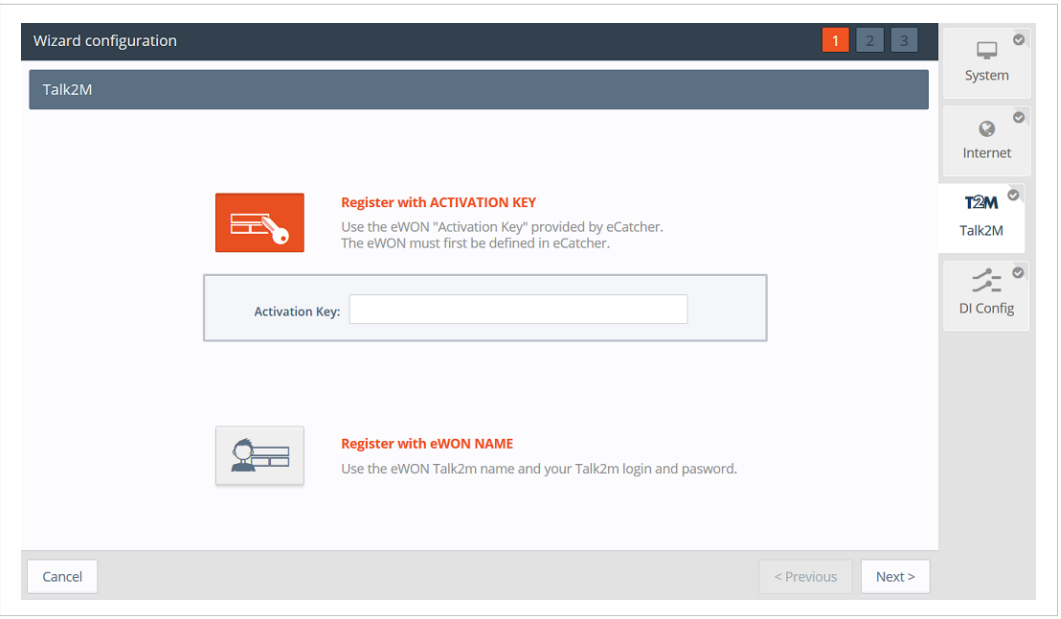

Fig. 16 Talk2M Wizard Activation Key

Alternately, it is possible to register with the eWON Name option:

- Click on *Register with eWON Name*
- Enter the Talk2M name of the Cosy 131, and a valid Talk2M account user credentials.

Click *Next* to move forward to the following screen.

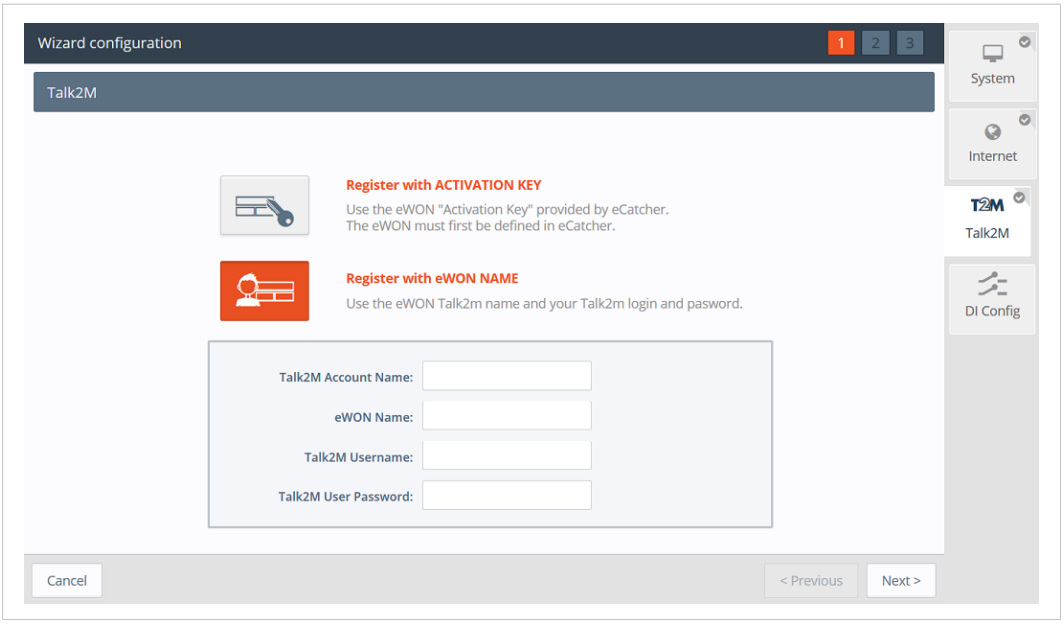

Fig. 17 Talk2M Wizard Registration Name

If the network used for Internet access apply a proxy server:

- Check the *Enable* checkbox in the *Connect via HTTP Proxy* settings
- Enter the appropriate information for the proxy server

Click *Next* to move forward to the next screen.

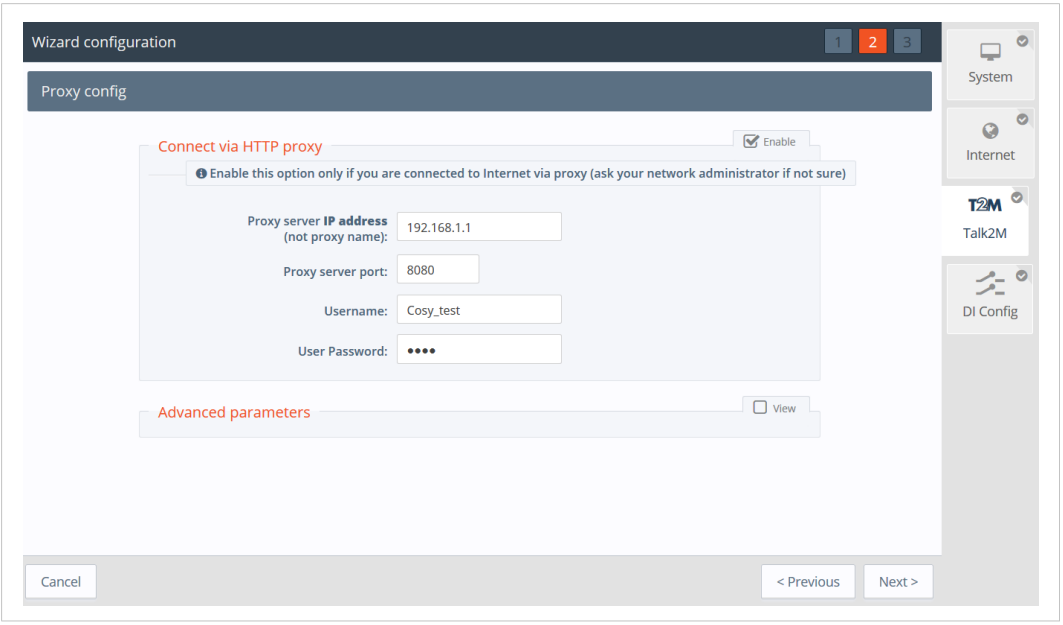

Fig. 18 Talk2M Wizard Proxy Configuration

This Wizard connects to the Talk2M server and retrieve the VPN settings for the Cosy 131 linked to your account. The Wizard also check UDP and TCP connection to find the best suitable option for this eWON. If the wizard completes successfully, the Cosy 131 is now configured for Remote Access through Talk2M. If the wizard fails, the *Diagnostic and Setup, p. 26* section will give additional troubleshooting information.

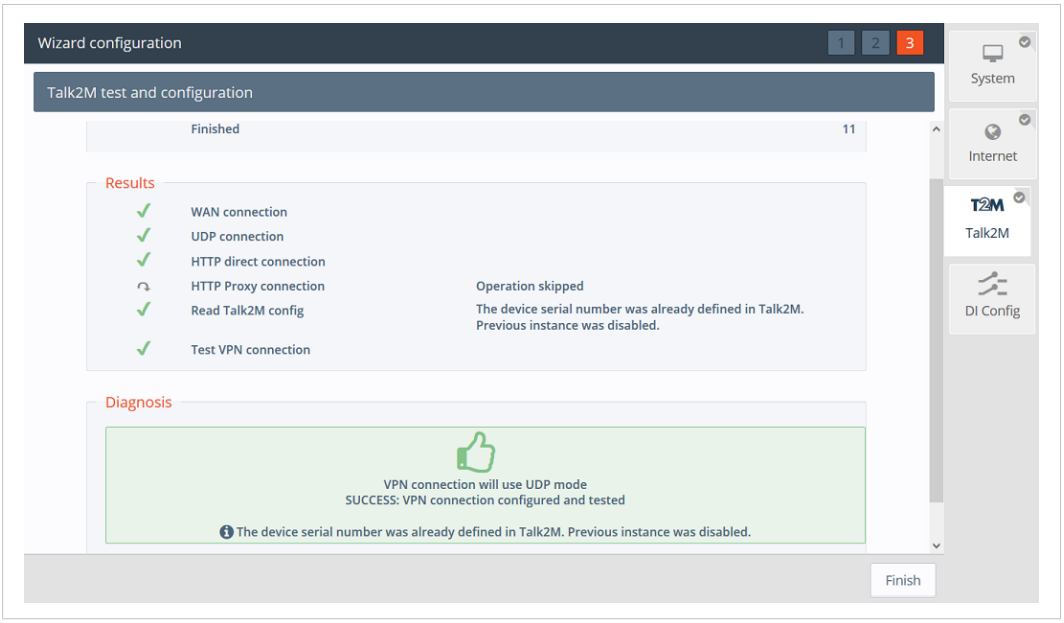

Fig. 19 Talk2M Wizard Validation

5 Home Section

The Summary page or home section, shows at a glance information about the health and status of the Cosy 131. Its current Internet connection and VPN connection status, date and time, and firmware versions are all displayed

Internet Connection	
Fallback	The status of the WAN fallback feature. For more information about the WAN fallback, check the *Wan fallback, p. 24*.
Internet Status	This field appears only if the Internet connection of the Cosy 131 hasn't been configured.
Connected since	Elapsed time since the Cosy 131 is connected to the Internet.
WAN IP Address	IP address of the WAN connection.
Connected interface	WAN interface used to connect the Cosy 131 to the Internet.
WiFi Status	The SSID of the the Wi-Fi network the Cosy 131 is currently connected to. This field appears only if the Cosy 131 is equipped with a Wi-Fi interface.
GSM Status	The name of the cellular operator, the signal strength and the cellular technology used.
GSM data consumption	The cellular consumption of the Cosy 131 (upload & download).

VPN Connection	
Status	This field appears only if the VPN connection of the Cosy 131 hasn't been configured.
Connected since	The elapsed time since the Cosy 131 is connected to the VPN service. This field doesn't appear if the VPN connection hasn't been configured.
VPN IP Address	The IP address of the VPN connection. This field doesn't appear if the VPN connection hasn't been configured.

System Information	
Current user	The user currently used to browse the web interface.
eWON Type	The model of the device.
Serial Number	The serial number of the device.
Firmware Version	The current firmware version of the device.
Current time	The current date & time of the device.
LAN IP/Mask	The LAN IP address and subnet mask of the device. By default: 10.0.0.53/255.255.255.0
Embedded modems	The type of modem inserted in the Cosy 131: Wi-Fi or Cellular This field appears only if the model of the Cosy 131 is equipped with Wi-Fi or Cellular connection.

Gateway Status	
USB	Status of the USB connectivity. By default, it is activated. Possibility to change this status by clicking on it.
NAT 1:1	Status of the NAT 1:1 By default, it is deactivated. Possibility to change this status by clicking on it.

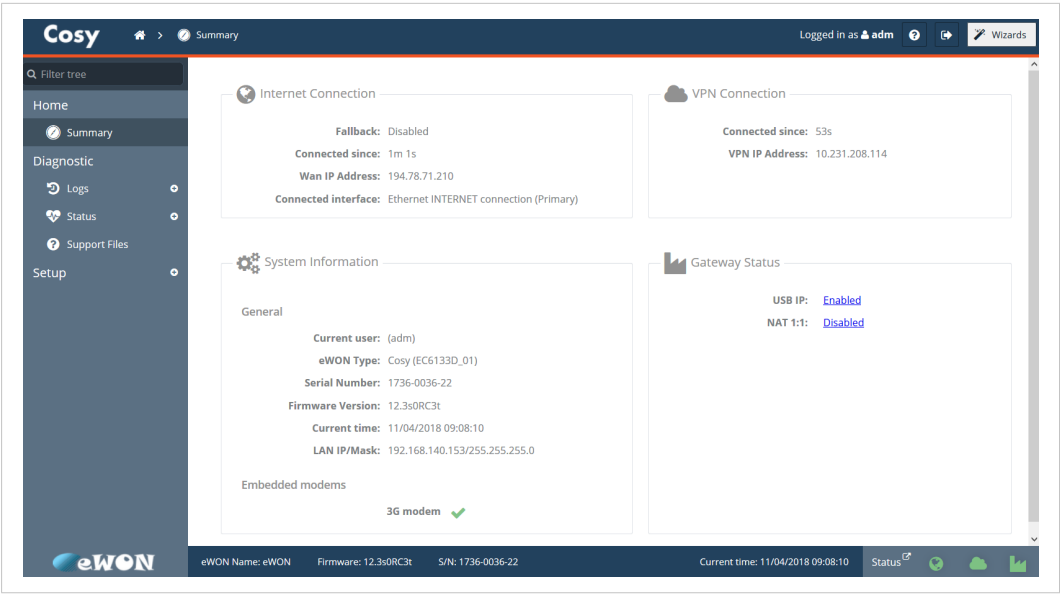

Fig. 20 Summary Page

6 Ready to establish the remote connection to your eWON

The Cosy 131 is now configured and available for remote access.

Start now eCatcher to connect your Cosy 131 remotely. Alternatively, you can also use *eCatcherMobile* or *M2Web*.

eCatcher Mobile:

It is the app version to be installed on your mobile devices running under Apple iOS or Google Android. It is used to initialize secure remote access and allows you to use mobile applications. For further information, refer to eCather Mobile from the *Related Documents, p. 3*

M2Web:

It allows the remote Web access to your eWONs. To realize the remote Web access, no special software is needed on the PC or on the tablet. For further information, refer toM2Web from the *Related Documents, p. 3*

7 DI Config Wizard

This option is not part of the *Quick Launch* Wizard, so it is only available by clicking on the *DI Config* wizard. Moreover, the DI physical connection need to be wired to be used as a function.

The digital inputs can be used to :

- Control the remote access using a *Key switch*
- Send out an alarm notification by email and/or SMS

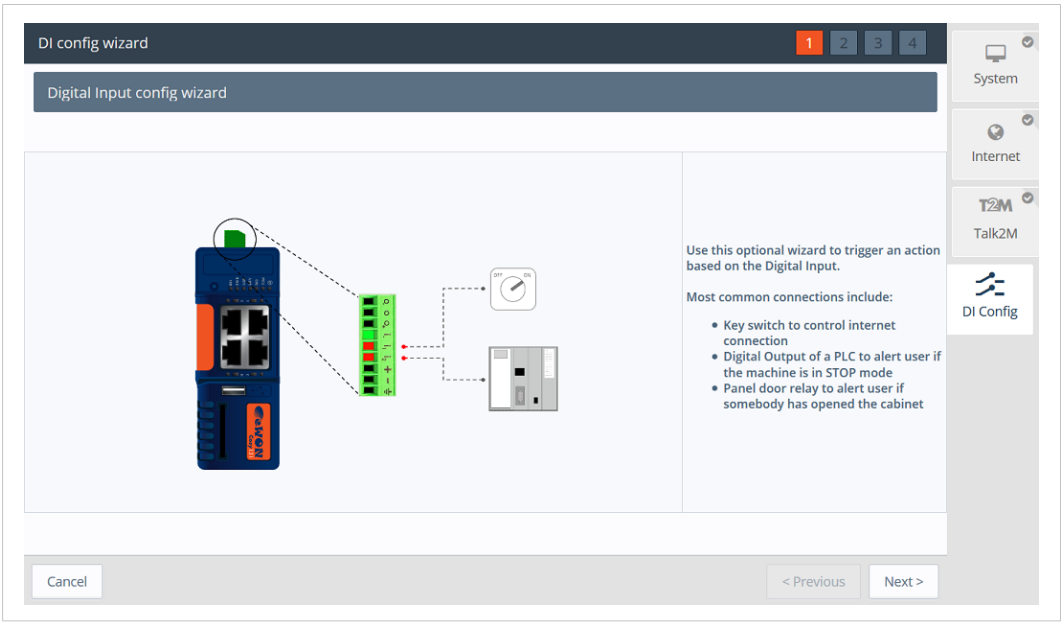

Fig. 21 DI Wizard

7.1 Remote Access Control

To enable the remote access control:

- Click the *Enabled* checkbox. If enabled, then Talk2M remote access will only be possible at the high state of the digital input 1. Only if the *Key Switch* has been enabled.

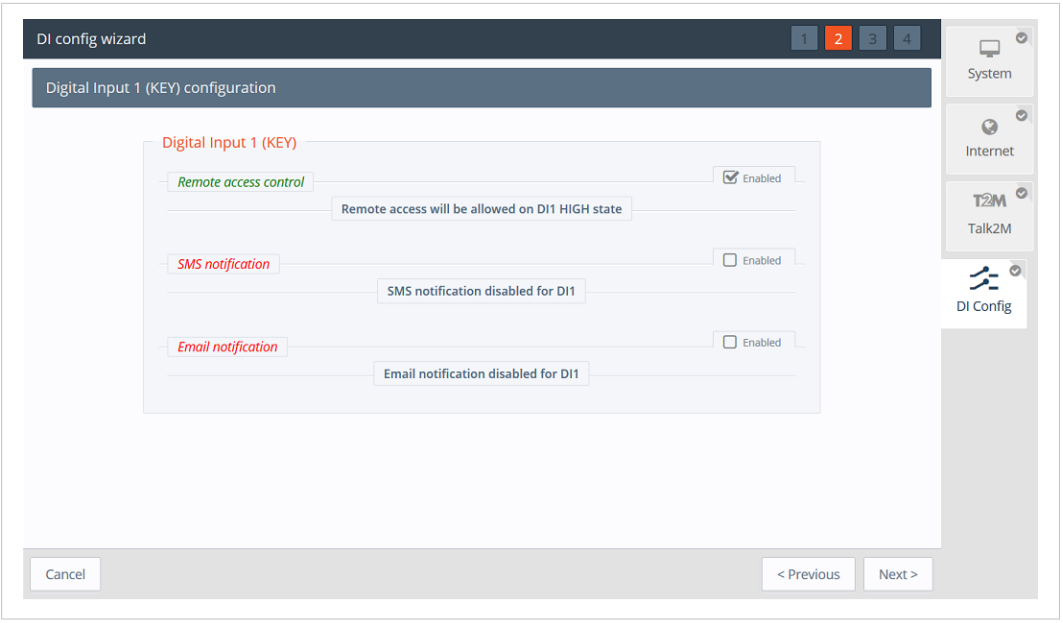

Fig. 22 DI Wizard Remote Access Key Configuration

7.2 DI Alarm Notification

The following options are valid for *DI1* and *DI2*. For both digital inputs you can setup email or SMS text message notification.

The *DI Config Wizard*: Select the option(s) by simply checking the *Enable* checkbox.

- The *SMS notifications*; enter the phone number, and body of the message accordingly; then a notification will be sent when the *Digital Input* switch on a high state.
- The *Email notification* enter the recipient, subject, and body of the message; then a notification will be sent when the *Digital Input* switch on a high state

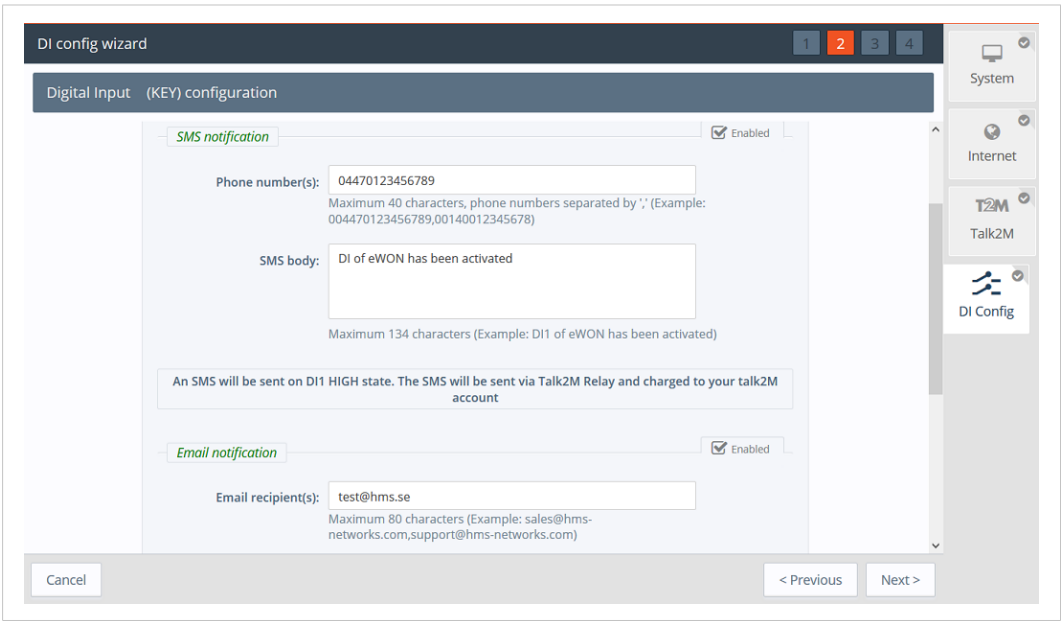

Fig. 23 DI Wizard Notification Key Configuration

Click *Next* to test and apply the *Digital Input* connection settings.

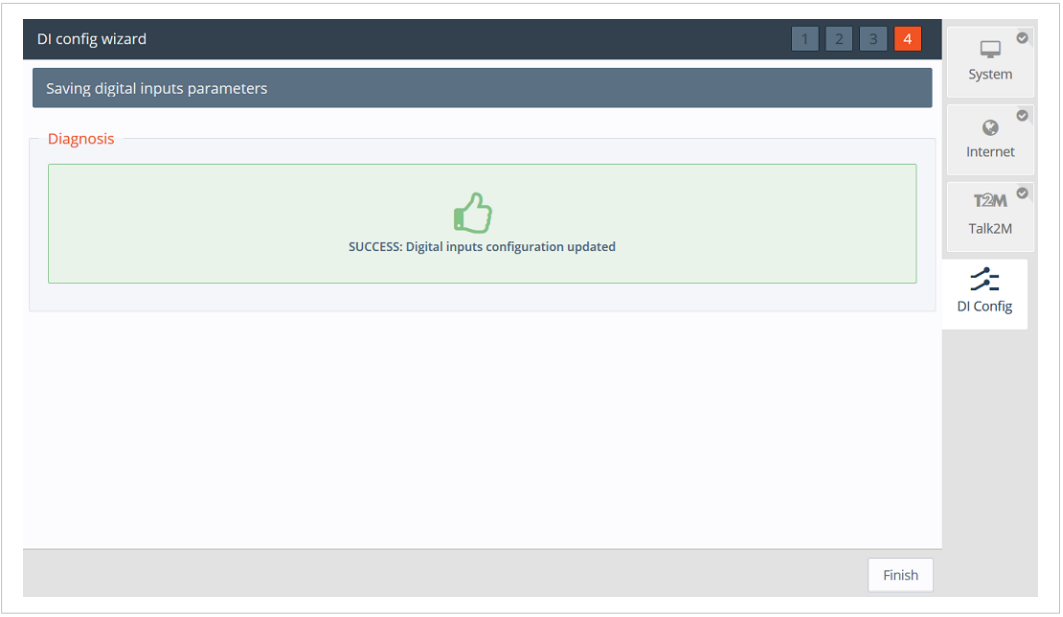

Fig. 24 DI Wizard Remote Key Configuration Validation

If the *Digital Input* is on a high state at boot time; then a notification is sent out once the Cosy 131 is connected to Talk2M and a prefix “(BOOT)” is added to your messages

> **!** SMS and email notifications *even on a Cosy 131 WiFi and ethernet*, are sent via T2M relays, but it does force the Cosy 131 to have a T2M connectivity and charges will apply for every SMS sent.

8 Wan fallback

The *WAN fallback* , is an alternative option that allows the eWON Cosy 131 to switch between networks automatically when the primary WAN network interface fails.

To configure the WAN fallback feature on the Cosy 131, the Internet wizard needs to be re-launch, then configure the Internet wizard once again. if the Cosy 131 detects a second WAN interface; it will ask you if you want to configure a *WAN Fallback* interface.

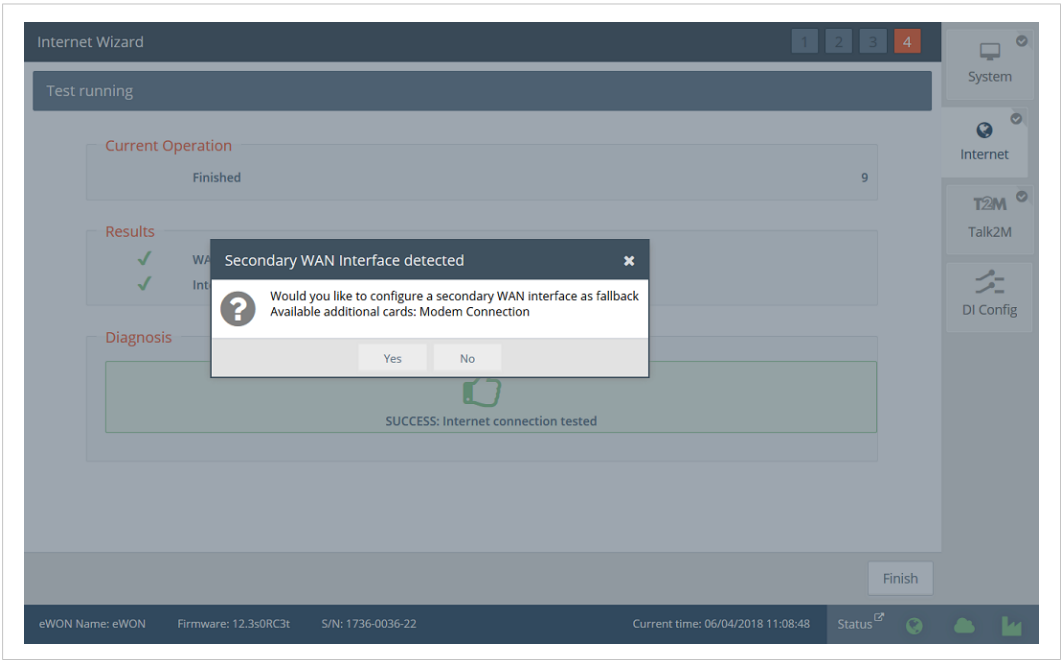

Fig. 25 Internet Wizard WAN Fallback

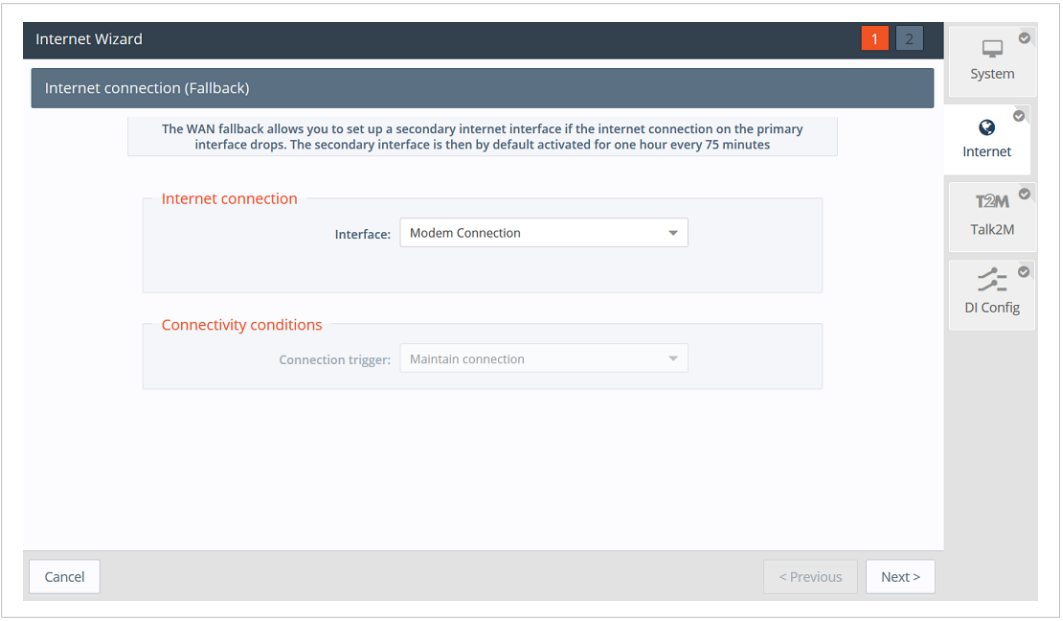

Fig. 26 Internet Wizard WAN Fallback Setup

In the case the primary WAN interface fails, the Cosy 131 will shift to the secondary WAN interface 3 minutes after the connection problem appears, then it will stay on the secondary WAN interface *the fallback interface* for 1 hour. After this hour the Cosy 131 will try to connect back the primary WAN interface and if the does not succeed the Cosy 131 will go back to the

secondary WAN interface. For further information about Wan Fallback refer to *Related Documents, p. 3*

Click *Next* to move forward to the next screen.

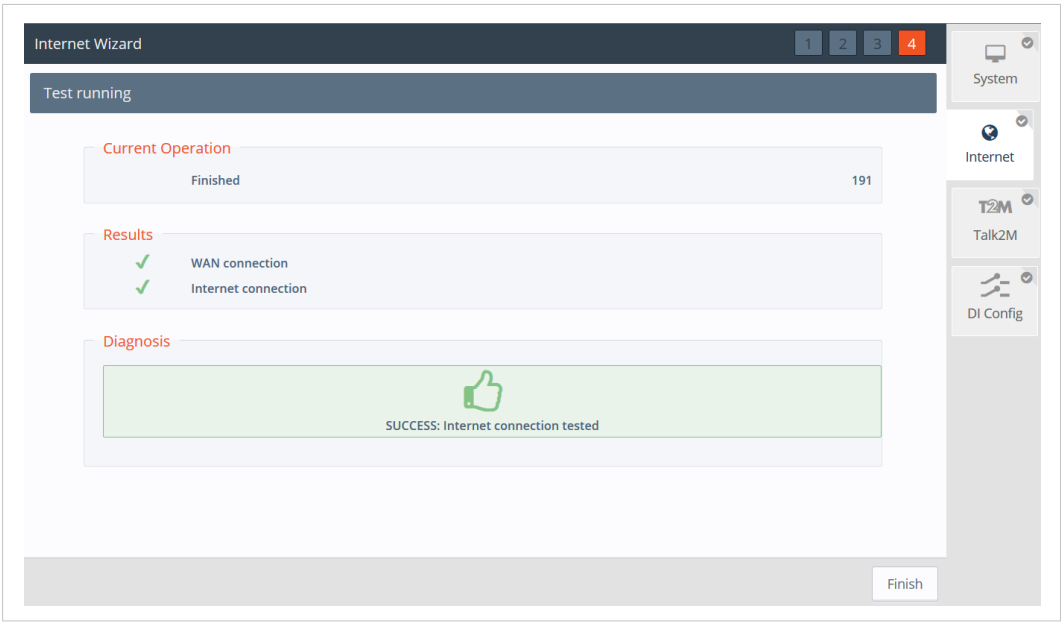

Fig. 27

Now, the *WAN fallback* network settings are successfully configured.

WAN fallback feature will appears only by clicking on the Internet Wizard. If the Quick Launch Wizard is performed; the Internet Wizard will not offer the WAN fallback option

9 Diagnostic and Setup

On the Cosy 131 , the main configuration setup are done through the Wizard nevertheless, on the left hand side menu, there are 2 core options *Diagnostic* and *Setup*.

The *Diagnostic* menu, records significant system events on the Cosy 131 that can be used in case of troubleshooting; such a logs are given one of three severity levels: *Error*, *Warning* or *Trace* and color coded correspondingly

The *Setup* menu on the other hand offers an alternative approach to changes parameters such as *Language, Ethernet IP,* and/ or reboot the Cosy 131

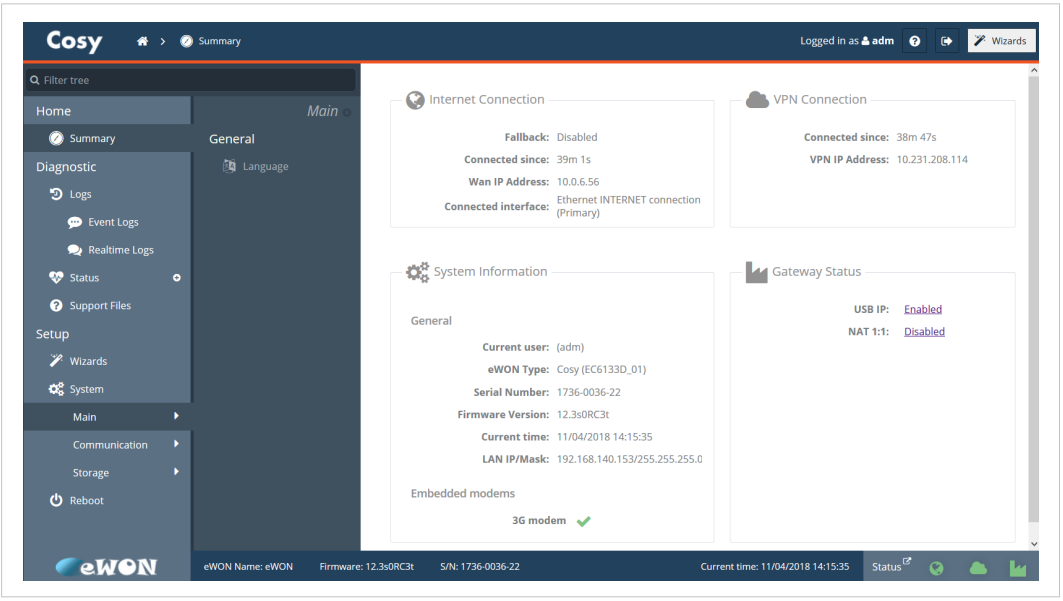

Fig. 28 Diagnostic and Setup menu

This page intentionally left blank

© 2018 HMS Industrial Networks
Box 4126
300 04 Halmstad, Sweden

info@hms.se

HMI, 12.1" DISPLAY, HMIDT642

Magelis GTU User Manual

10/2016

EIO0000001735_03

www.schneider-electric.com

The information provided in this documentation contains general descriptions and/or technical characteristics of the performance of the products contained herein. This documentation is not intended as a substitute for and is not to be used for determining suitability or reliability of these products for specific user applications. It is the duty of any such user or integrator to perform the appropriate and complete risk analysis, evaluation and testing of the products with respect to the relevant specific application or use thereof. Neither Schneider Electric nor any of its affiliates or subsidiaries shall be responsible or liable for misuse of the information contained herein. If you have any suggestions for improvements or amendments or have found errors in this publication, please notify us.

No part of this document may be reproduced in any form or by any means, electronic or mechanical, including photocopying, without express written permission of Schneider Electric.

All pertinent state, regional, and local safety regulations must be observed when installing and using this product. For reasons of safety and to help ensure compliance with documented system data, only the manufacturer should perform repairs to components.

When devices are used for applications with technical safety requirements, the relevant instructions must be followed.

Failure to use Schneider Electric software or approved software with our hardware products may result in injury, harm, or improper operating results.

Failure to observe this information can result in injury or equipment damage.

© 2016 Schneider Electric. All Rights Reserved.

Table of Contents

	Safety Information	7
	About the Book	9
Chapter 1	**Overview**	15
	Part Number Configuration	16
	Part Numbers	17
	Package Contents	18
	Certifications and Standards	20
	Federal Communication Commission Radio Frequency Interference Statement - For USA	22
	Hazardous Location Installation - For USA and Canada	23
	European (CE) Compliance	26
	KC Markings	27
	Wireless LAN Information	28
Chapter 2	**Device Connectivity**	35
	System Design	36
	Accessories	38
Chapter 3	**Parts Identification and Functions**	43
3.1	Box Module	44
	Premium Box	45
	Open Box	48
	LED Indications	51
3.2	Display Module	52
	Smart Display	53
	Advanced Display	57
	LED Indications	60
Chapter 4	**Specifications**	61
4.1	General Specifications	62
	Electrical Specifications	63
	Environmental Specifications	66
	Structural Specifications	68
4.2	Functional Specifications	71
	Display Specifications	72
	Memory	74
	Clock	75
	Touch Panel	76

4.3 Interface Specifications . . . 77
Interface Specifications . . . 78
Interface Connection . . . 82
Serial Interface (RS-485 [Isolation]) for COM1 . . . 86
Serial Interface (RS-232C and RS-422/RS-485) for COM2 . . . 87
Auxiliary Output/Speaker Output Interface (AUX) . . . 90
DVI-D Output Interface (only for Open Box) . . . 91
Chapter 5 Dimensions . . . 95
5.1 Premium Box . . . 96
HMIG3U . . . 96
5.2 Open Box . . . 97
HMIG5U/HMIG5U2 . . . 97
5.3 Smart Display . . . 98
HMIDT542 . . . 99
HMIDT642/HMIDT643 . . . 100
HMIDT732 . . . 101
5.4 Advanced Display . . . 102
HMIDT351 . . . 103
HMIDT551 . . . 104
HMIDT651 . . . 105
5.5 Box and Display Modules - Combined Dimensions . . . 106
HMIDT542 with Box Module . . . 107
HMIDT642/HMIDT643 with Box Module . . . 109
HMIDT732 with Box Module . . . 111
HMIDT351 with Box Module . . . 113
HMIDT551 with Box Module . . . 115
HMIDT651 with Box Module . . . 117
Chapter 6 Installation and Wiring . . . 119
6.1 Installation . . . 120
Installation Procedures . . . 120
6.2 Wiring Principles . . . 135
Connecting the DC Power Cord . . . 136
Connecting the Power Supply . . . 139
Grounding . . . 142
6.3 USB Cable Clamp . . . 144
USB Clamp Type A (1 port) . . . 144
6.4 AUX Connector . . . 147
Introduction . . . 147

6.5 SD Card Insertion/Removal 149
Introduction 150
Inserting the SD Card 151
Removing the SD Card 153
SD Card Data Backup 155
6.6 CFast Card Insertion/Removal 156
Introduction 157
Inserting the CFast Card 158
Removing the CFast Card 160
CFast Card Data Backup 162
6.7 Front USB Cover 163
Opening the Front USB Cover 163
6.8 Isolation Unit 165
Introduction 166
Installing to the Box Module 167
Chapter 7 Maintenance 169
Regular Cleaning 170
Periodic Check Points 171
Replacing the Installation Gasket 172
Replacing the Primary Battery 174
Replacing the System Card (SD Card) 177
Replacing the System Card (CFast Card) 180
Replacing the Backlight 183
Index 185

Safety Information

Important Information

NOTICE

Read these instructions carefully, and look at the equipment to become familiar with the device before trying to install, operate, service, or maintain it. The following special messages may appear throughout this documentation or on the equipment to warn of potential hazards or to call attention to information that clarifies or simplifies a procedure.

The addition of this symbol to a “Danger” or “Warning” safety label indicates that an electrical hazard exists which will result in personal injury if the instructions are not followed.

This is the safety alert symbol. It is used to alert you to potential personal injury hazards. Obey all safety messages that follow this symbol to avoid possible injury or death.

⚠ DANGER

DANGER indicates a hazardous situation which, if not avoided, **will result in** death or serious injury.

⚠ WARNING

WARNING indicates a hazardous situation which, if not avoided, **could result in** death or serious injury.

⚠ CAUTION

CAUTION indicates a hazardous situation which, if not avoided, **could result** in minor or moderate injury.

NOTICE

NOTICE is used to address practices not related to physical injury.

PLEASE NOTE

Electrical equipment should be installed, operated, serviced, and maintained only by qualified personnel. No responsibility is assumed by Schneider Electric for any consequences arising out of the use of this material.

A qualified person is one who has skills and knowledge related to the construction and operation of electrical equipment and its installation, and has received safety training to recognize and avoid the hazards involved.

About the Book

At a Glance

Document Scope

This manual describes how to use this product.

Validity Note

This documentation is valid for this product.

The technical characteristics of the devices described in this document also appear online. To access this information online:

Step	Action
1	Go to the Schneider Electric home page *www.schneider-electric.com*.
2	In the **Search** box type the reference of a product or the name of a product range. ● Do not include blank spaces in the reference or product range. ● To get information on grouping similar modules, use asterisks (*).
3	If you entered a reference, go to the **Product Datasheets** search results and click on the reference that interests you. If you entered the name of a product range, go to the **Product Ranges** search results and click on the product range that interests you.
4	If more than one reference appears in the **Products** search results, click on the reference that interests you.
5	Depending on the size of your screen, you may need to scroll down to see the data sheet.
6	To save or print a data sheet as a .pdf file, click **Download XXX product datasheet**.

The characteristics that are presented in this manual should be the same as those characteristics that appear online. In line with our policy of constant improvement, we may revise content over time to improve clarity and accuracy. If you see a difference between the manual and online information, use the online information as your reference.

Registered Trademarks

Microsoft and Windows are registered trademarks of Microsoft Corporation in the United States and/or other countries.

Product names used in this manual may be the registered trademarks owned by the respective proprietors.

Related Documents

You can download the manual related to this product, such as the software manual, from our website at *www.schneider-electric.com*.

Product Related Information

If the equipment is used in a manner not specified by the manufacturer, the protection provided by the equipment may be impaired.

⚠ ⚠ DANGER

HAZARD OF ELECTRIC SHOCK, EXPLOSION, OR ARC FLASH

- Remove all power from the device before removing any covers or elements of the system, and prior to installing or removing any accessories, hardware, or cables.
- Unplug the power cable from both this product and the power supply.
- Always use a properly rated voltage sensing device to confirm power is off.
- Replace and secure all covers or elements of the system before applying power to this product.
- Use only the specified voltage when operating this product. This product is designed to use 12 to 24 Vdc. Always check whether your device is DC powered before applying power.

Failure to follow these instructions will result in death or serious injury.

Critical alarm indicators and system functions require independent and redundant protection hardware and/or mechanical interlocks.

When you cycle power, wait at least 10 seconds after it has been turned off. If this product is restarted too quickly, it may not operate correctly.

In the event the screen cannot be properly read, for example, if the backlight is not functioning, it may be difficult or impossible to identify a function. Functions that may present a hazard if not immediately executed, such as a fuel shut-off, must be provided independently of this product. The machine's control system design must take into account the possibility of the backlight no longer functioning and the operator being unable to control the machine or making mistakes in the control of the machine.

⚠ WARNING

LOSS OF CONTROL

- The designer of any control scheme must consider the potential failure modes of control paths and, for certain critical control functions, provide a means to achieve a safe state during and after a path failure. Examples of critical control functions are emergency stop and overtravel stop, power outage and restart.
- Separate or redundant control paths must be provided for critical control functions.
- System control paths may include communication links. Consideration must be given to the implications of unanticipated transmission delays or failures of the link.
- Observe all accident prevention regulations and local safety guidelines.
- Each implementation of this product must be individually and thoroughly tested for proper operation before being placed into service.
- The machine control system design must take into account the possibility of the backlight no longer functioning and the operator being unable to control the machine, or making errors in the control of the machine.

Failure to follow these instructions can result in death, serious injury, or equipment damage.

For additional information, refer to NEMA ICS 1.1 (latest edition), "Safety Guidelines for the Application, Installation, and Maintenance of Solid State Control" and to NEMA ICS 7.1 (latest edition), "Safety Standards for Construction and Guide for Selection, Installation and Operation of Adjustable-Speed Drive Systems" or their equivalent governing your particular location.

NOTE: Open Box is a highly configurable device and is not based on a real-time operating system. Changes to the software and settings of the following must be considered new implementations as discussed in the previous warning messages. Examples of such changes include:

- System BIOS
- Operating System
- Installed hardware
- Installed software

⚠ WARNING

UNINTENDED EQUIPMENT OPERATION

The application of this product requires expertise in the design and programming of control systems. Only persons with such expertise should be allowed to program, install, alter, and apply this product.

Follow all local and national safety standards.

Failure to follow these instructions can result in death, serious injury, or equipment damage.

⚠ WARNING

UNINTENDED EQUIPMENT OPERATION

- Do not use this product as the only means of control for critical system functions such as motor start/stop or power control.
- Do not use this equipment as the only notification device for critical alarms, such as device overheating or overcurrent.
- Use only the software provided with this product. If you use another software, please confirm the operation and safety before use.

Failure to follow these instructions can result in death, serious injury, or equipment damage.

The following characteristics are specific to the LCD panel and are considered normal behavior:

- LCD screen may show unevenness in the brightness of certain images or may appear different when seen from outside the specified viewing angle. Extended shadows, or crosstalk may also appear on the sides of screen images.
- LCD screen pixels may contain black and white colored spots and color display may seem to have changed.
- When experiencing vibrations within a certain frequency range and vibration acceleration is above what is acceptable, the LCD screen may partially turn white. Once the vibration condition ends, the whitening of the screen is resolved.
- When the same image is displayed on the screen for a long period, an afterimage may appear when the image is changed.
- The panel brightness may decrease when used for a long time in an environment continuously filled with inert gas. To prevent deterioration of panel brightness, regularly ventilate the panel. For more information, please contact your local distributor.
  www.schneider-electric.com

NOTE: Change the screen image periodically and try not to display the same image for a long period of time.

⚠ CAUTION

SERIOUS EYE AND SKIN INJURY

The liquid in the LCD panel contains an irritant:

- Avoid direct skin contact with the liquid.
- Wear gloves when you handle a broken or leaking unit.
- Do not use sharp objects or tools in the vicinity of the LCD panel.
- Handle the LCD panel carefully to prevent puncture, bursting, or cracking of the panel material.
- If the panel is damaged and any liquid comes in contact with your skin, immediately rinse the area with running water for at least 15 minutes. If the liquid gets in your eyes, immediately rinse your eyes with running water for at least 15 minutes and consult a doctor.

Failure to follow these instructions can result in injury or equipment damage.

Chapter 1
Overview

What Is in This Chapter?

This chapter contains the following topics:

Topic	Page
Part Number Configuration	16
Part Numbers	17
Package Contents	18
Certifications and Standards	20
Federal Communication Commission Radio Frequency Interference Statement - For USA	22
Hazardous Location Installation - For USA and Canada	23
European (CE) Compliance	26
KC Markings	27
Wireless LAN Information	28

Part Number Configuration

The following describes the configuration of part numbers.

Box Module

Digit Position	1	2	3	4	5	6
	H	M	I	G	(model)	(type)
					3: Premium 5: Open	U/U2: Universal

Display Module

Digit Position	1	2	3	4	5	6	7	8
	H	M	I	D	(type)	(size)	(LCD)	(type)
					T: Touch	3: 7" 5: 10" 6: 12" 7: 15"	3: TFT normal 4: TFT high definition 5: TFT wide	1: Advanced modular 2: Smart modular 3: Smart + Wireless LAN

Part Numbers

Series		Model Names	Part Numbers
Magelis GTU	Premium Box	HMIG3U	HMIG3U
	Open Box	HMIG5U	HMIG5U
		HMIG5U2	HMIG5U2
	Smart Display	HMIDT542	HMIDT542
		HMIDT642	HMIDT642
		HMIDT643	HMIDT643
		HMIDT732	HMIDT732
	Advanced Display	HMIDT351	HMIDT351
		HMIDT551	HMIDT551
		HMIDT651	HMIDT651

NOTE: You can connect any Display Module to any Box Module except for the HMIG5U.*1

*1 HMIG5U supports only Display Modules with a resolution of XGA or less.

Package Contents

NOTE: This product has been carefully packed with special attention to quality. However, should you find anything damaged or missing, please contact your local distributor immediately.

Box Module

Verify all items listed here are present in your package:

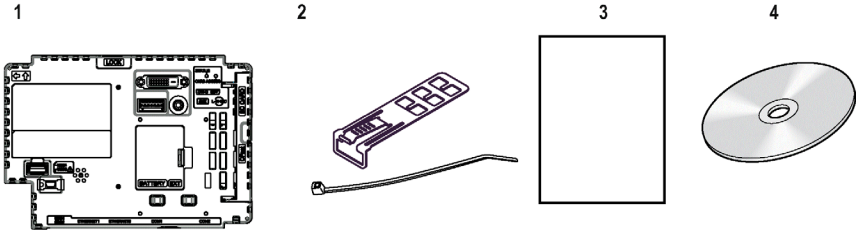

1 Magelis GTU Box Module: 1
2 USB Clamp Type A (1 port): 2 sets for Premium Box, 3 sets for Open Box (1 clip and 1 tie)
3 Magelis GTU (Box Module) Quick Reference Guide: 1
4 Restore DVD (only for Open Box): 1
5 End-user License Agreement (only for Open Box): 2

Display Module

Verify all items listed here are present in your package:

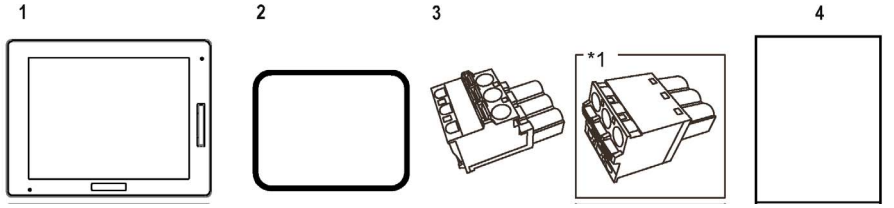

1 Magelis GTU Display Module: 1
2 Installation Gasket: 1 (attached to this product)
3 DC Power Supply Connector (Right-angle[*1]): 1
4 Magelis GTU (Display Module) Quick Reference Guide: 1

*1 Straight type for HMIDT351

Revision

You can identify the product version (PV), revision level (RL), and the software version (SV) from the product label.

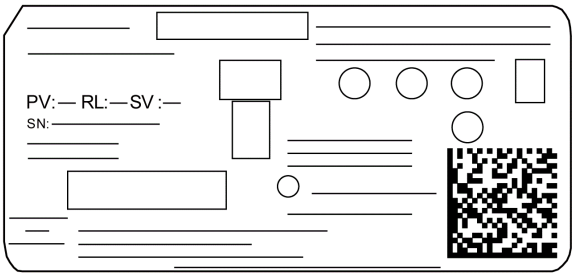

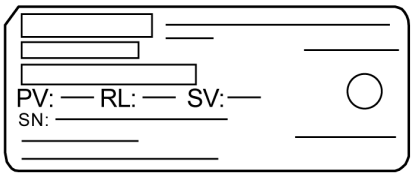

Certifications and Standards

Some products are not subject to certification and standards. And some products have not received their certification and standards but are scheduled for assessment.

The certifications and standards listed below may include those that are not yet acquired for this product. For the latest certifications and standards that this product has acquired, please check the product marking or the following URL.

www.schneider-electric.com

Agency Certifications

Schneider Electric submitted this product for independent testing and qualification by third-party listing agencies. These agencies have certified this product as meeting the following standards.

HMIG5U2

- Underwriters Laboratories Inc., UL 61010-2-201 and CSA C22.2 N°61010-2-201, Industrial Control Equipment

All models except for HMIG5U2

- Underwriters Laboratories Inc., UL 508 and CSA C22.2 N°142, Industrial Control Equipment

All models

- Underwriters Laboratories Inc., ANSI/ISA 12.12.01 and CSA C22.2 N°213, Electrical Equipment for Use in Class I, Division 2 Hazardous (Classified) Locations
- IECEx / ATEX for use in zones 2/22
- EAC certification (Russia, Belarus, Kazakhstan)
- American Bureau of Shipping (ABS)
- Bureau Veritas (BV)
- China Classification Society (CCS)
- Det Norske Veritas - Germanischer Lloyd (DNV-GL)
- Lloyd’s Register (LR)
- Registro Italiano Navale (RINA)

Compliance Standards

Europe:

CE

- Directive2014/35/EU (Low Voltage)
- Directive 2014/30/EU (EMC)
  - Programmable Controllers: EN 61131-2
  - EN61000-6-4
  - EN61000-6-2
- Directive 2014/34/EU (ATEX)
  - EN60079-0
  - EN60079-15
  - EN60079-31
- Directive 2014/53/EU (RTTE)
  - EN300 328
  - EN301 489
  - EN60950-1

Australia

- RCM
  - EN61000-6-4

Korea

- KC
  - KN11
  - KN61000-6-2

Qualifications Standards

Schneider Electric voluntarily tested this product to additional standards. The additional tests performed, and the standards under which the tests were conducted, are specifically identified in Structural Specifications *(see page 68)*.

Hazardous Substances

This product is a device for use in factory systems. When using this product in a system, the system should comply with the following standards in regards to the installation environment and handling:

- WEEE, Directive 2012/19/EU
- RoHS, Directive 2011/65/EU
- RoHS China, Standard SJ/T 11364
- REACH regulation EC 1907/2006

Federal Communication Commission Radio Frequency Interference Statement - For USA

FCC Radio Interference Information

This product has been tested and found to comply with the Federal Communications Commission (FCC) limits for a Class A digital device, pursuant to Part 15 of the FCC Rules. These limits are designed to provide reasonable protection against harmful interference in a commercial, industrial or business environment. This product generates, uses, and can radiate radio frequency energy and, if not installed and used in accordance with the instructions, may cause or be subject to interference with radio communications. To minimize the possibility of electromagnetic interference in your application, observe the following two rules:

- Install and operate this product in such a manner that it does not radiate sufficient electromagnetic energy to cause interference in nearby devices.
- Install and test this product to ensure that the electromagnetic energy generated by nearby devices does not interfere with the operation of this product.
- Changes or modifications not expressly approved by the party responsible for compliance could void the user's authority to operate this product.

⚠ WARNING

ELECTROMAGNETIC / RADIO INTERFERENCE

Electromagnetic radiation may disrupt the operation of this product leading to unintended equipment operation. If electromagnetic interference is detected:

- Increase the distance between this product and the interfering equipment.
- Reorient this product and the interfering equipment.
- Reroute power and communication lines to this product and the interfering equipment.
- Connect this product and the interfering equipment to different power supplies.
- Always use shielded cables when connecting this product to a peripheral device or another computer.

Failure to follow these instructions can result in death, serious injury, or equipment damage.

Hazardous Location Installation - For USA and Canada

General

This product has been designed with the intention of meeting the requirements of Class I, Division 2 hazardous location application. Division 2 locations are those locations where ignitable concentrations of flammable substances are normally confined, prevented by ventilation, or present in an adjacent Class I, Division 1 location, but where an abnormal situation might result in intermittent exposure to such ignitable concentrations.

While this product is a non-incendive device under ANSI/ISA 12.12.01 and CSA C22.2 N°213, it is not designed for, and should never be used within a Division 1 (normally hazardous) location.

This product is suitable for use in Class I, Division 2, Groups A, B, C, and D hazardous locations or in non-hazardous locations. Before installing or using this product, confirm that the ANSI/ISA 12.12.01 or CSA22.2 N°213 certification appears on the product labeling.

NOTE: Some products are not yet rated as suitable for use in hazardous locations. Always use your product in conformance with the product labeling and this manual.

⚠ DANGER

POTENTIAL FOR EXPLOSION

- Do not use this product in hazardous environments or locations other than Class I, Division 2, Groups A, B, C, and D.
- Substitution of any component may impair suitability for Class I, Division 2.
- Do not connect or disconnect this product unless power has been switched off or the area is known to be non-hazardous.
- Always confirm that this product is suitable for use in hazardous locations by checking the ANSI/ISA 12.12.01 or CSA C22.2 N°213 certification appears on the product labeling.
- Do not install any Schneider Electric or OEM components, equipment, or accessories unless these have also been qualified as suitable for use in Class I, Division 2, Groups A, B, C, and D locations.
- Do not attempt to install, operate, modify, maintain, service, or otherwise alter this product except as permitted in this manual. Unpermitted actions may impair the suitability of this product for Class I, Division 2 operation.

Failure to follow these instructions will result in death or serious injury.

⚠ DANGER

POTENTIAL FOR EXPLOSION

- Always confirm the ANSI/ISA 12.12.01 or CSA C22.2 N°213 hazardous location rating of your device before installing or using it in a hazardous location.
- To apply or remove the supply power from this product installed in a Class I, Division 2 hazardous location, you must either:
  - ❍ Use a switch located outside the hazardous environment, or;
  - ❍ Use a switch certified for Class I, Division 1 operation inside the hazardous area.
- Do not connect or disconnect equipment unless power has been switched off or the area is known to be non-hazardous. This applies to all connections including power, ground, serial, parallel, and network connections.
- Never use unshielded / ungrounded cables in hazardous locations.
- Use only non-incendiary USB devices.
- When enclosed, keep enclosure doors and openings closed at all times to avoid the accumulation of foreign matter inside the workstation.

Failure to follow these instructions will result in death or serious injury.

⚠ ⚠ DANGER

HAZARD OF ELECTRIC SHOCK, EXPLOSION, OR ARC FLASH

- Remove all power from the device before removing any covers or elements of the system, and prior to installing or removing any accessories, hardware, or cables.
- Unplug the power cable from both this product and the power supply.
- Always use a properly rated voltage sensing device to confirm power is off.
- Replace and secure all covers or elements of the system before applying power to this product.
- Use only the specified voltage when operating this product. This product is designed to use 12 to 24 Vdc. Always check whether your device is DC powered before applying power.

Failure to follow these instructions will result in death or serious injury.

Make sure that this product is properly rated for the location. If the intended location does not presently have a Class, Division and Group rating, then users should consult the appropriate authorities having jurisdiction in order to determine the correct rating for that hazardous location.

Operation and Maintenance

The systems have been designed for compliance with relevant spark ignition tests.

⚠ DANGER

POTENTIAL FOR EXPLOSION

In addition to the other instructions in this manual, observe the following rules when installing this product in a hazardous location:

- Wire the equipment in accordance with the National Electrical Code article 501.10 (B) for Class I, Division 2 hazardous locations.
- Install this product in an enclosure suitable for the specific application. IP66F, IP67F, Type 1, Type 4X (indoor use only), or Type 13 enclosures are recommended even when not required by regulations.

Failure to follow these instructions will result in death or serious injury.

NOTE: IP66F and IP67F are not part of UL certification.

European (CE) Compliance

CE Compliance Note

The product described in this manual comply with the European Directives concerning Electromagnetic Compatibility and Low Voltage (CE marking) when used as specified in the relevant documentation, in application for which they are specifically intended, and in connection with approved third-party products.

KC Markings

사용자안내문

기 종 별	사 용 자 안 내 문
A급 기기 (업무용 방송통신기자재)	이 기기는 업무용(A급) 전자파적합기기로서 판매자 또는 사용자는 이 점을 주의하시기 바라며, 가정외의 지역에서 사용하는 것을 목적으로 합니다.

Wireless LAN Information

Wireless LAN Information

USA

HMIDT643 contains Transmitter Module FCC ID: N6C-SDMGN.

FCC CAUTION

Changes or modifications not expressly approved by the party responsible for compliance could void the user's authority to operate the equipment.

NOTE: This equipment has been tested and found to comply with the limits for a Class A digital device, pursuant to part 15 of the FCC Rules. These limits are designed to provide reasonable protection against harmful interference when the equipment is operated in a commercial environment. This equipment generates, uses, and can radiate radio frequency energy and, if not installed and used in accordance with the instruction manual, may cause harmful interference to radio communications. Operation of this equipment in a residential area is likely to cause harmful interference in which case the user will be required to correct the interference at his own expense.

This transmitter must not be co-located or operated in conjunction with any other antenna or transmitter.

This equipment complies with FCC radiation exposure limits set forth for an uncontrolled environment and meets the FCC radio frequency (RF) Exposure Guidelines in Supplement C to OET65. This equipment should be installed and operated keeping the radiator at least 20 cm or more away from person's body (excluding extremities: hands, wrists, feet and ankles).

Canada

HMIDT643 contains Transmitter Module IC: 4908B-SDMGN.

This device complies with Industry Canada licence-exempt RSS standard(s). Operation is subject to the following two conditions: (1) this device may not cause interference, and (2) this device must accept any interference, including interference that may cause undesired operation of the device.

Le présent appareil est conforme aux CNR d'Industrie Canada applicables aux appareils radio exempts de licence. L'exploitation est autorisée aux deux conditions suivantes : (1) l'appareil ne doit pas produire de brouillage, et (2) l'utilisateur de l'appareil doit accepter tout brouillage radioélectrique subi, même si le brouillage est susceptible d'en compromettre le fonctionnement.

This equipment complies with IC radiation exposure limits set forth for an uncontrolled environment and meets RSS-102 of the IC radio frequency (RF) Exposure rules. This equipment should be installed and operated keeping the radiator at least 20 cm or more away from person's body (excluding extremities: hands, wrists, feet and ankles).

Cet équipement est conforme aux limites d'exposition aux rayonnements énoncées pour un environnement non contrôlé et respecte les règles d'exposition aux fréquences radioélectriques (RF) CNR-102 de l'IC. Cet équipement doit être installé et utilisé en gardant une distance de 20 cm ou plus entre le dispositif rayonnant et le corps (à l'exception des extrémités : mains, poignets, pieds et chevilles).

Europe

CE

EN300 328, EN301 489, EN60950-1

HMIDT643 may be operated in Belgium, Bulgaria, Czech Republic, Denmark, Germany, Estonia, Greece, Spain, France, Ireland, Italy, Cyprus, Latvia, Lithuania, Luxembourg, Malta, Hungary, Netherlands, Austria, Poland, Portugal, Romania, Slovak Republic, Slovenia, Finland, Sweden, United Kingdom.

EN	Hereby, Schneider Electric, declares that this HMIDT643 is in compliance with the essential requirements and other relevant provisions of Directive 1999/5/EC.
BG	С настоящето, Schneider Electric, декларира, че HMIDT643 е в съответствие със съществените изисквания и другитеприложими разпоредби на Директива 1999/5/ЕС.
CS	Schneider Electric tímto prohlašuje, že HMIDT643 splňuje základní požadavky a všechna příslušná ustanoveni Směrnice 1999/5/ES.
DA	Undertegnede Schneider Electric erklærer herved, at følgende udstyr HMIDT643 overholder de væsentlige krav og øvrige relevante krav i direktiv 1999/5/EF.
DE	Hiermit erklärt Schneider Electric, dass sich das Gerät HMIDT643 in Übereinstimmung mit den grundlegenden Anforderungen und den übrigen einschlägigen Bestimmungen der Richtlinie 1999/5/EG befindet.
ET	Käesolevaga kinnitab Schneider Electric seadme HMIDT643 vastavust direktiivi 1999/5/EÜ põhinõuetele ja nimetatud direktiivist tulenevatele teistele asjakohastele sätetele.
EL	ΜΕ ΤΗΝ ΠΑΡΟΎΣΑ Ο ΚΑΤΑΣΚΕΥΑΣΤΗΣ Schneider Electic ΔΗΛΩΝΕΙ ΟΤΙ HMIDT643 ΣΥΜΜΟΡΦΩΝΕΤΑΙ ΠΡΟΣ ΤΙΣ ΟΥΣΙΩΔΕΙΣ ΑΠΑΙΤΗΣΕΙΣ ΚΑΙ ΤΙΣ ΛΟΠΤΕΣ ΣΧΕΤΙΚΕΣ ΔΙΑΤΑΞΕΙΣ ΤΗΣ ΟΔΗΓΙΑΣ 1999/5 ΕΚ

ES	Por la presente, Schneider Electric, declara que este HMIDT643 cumple con los requisitos esenciales y otras exiencias relevantes de la Directiva 1999/5/EC.
FR	Par la présente, Schneider Electric déclare que l'appareil HMIDT643 est conforme aux exigences essentielles et aux autres dispositions pertinentes de la directive 1999/5/CE.
IT	Con la presente Schneider Electric dichiara che questo HMIDT643 è conforme ai requisiti essenziali ed alle altre disposizioni pertinenti stabilite dalla direttiva 1999/5/CE.
LV	Ar šo Schneider Electric deklarē, ka HMIDT643 atbilst Direktīvas 1999/5/EK būtiskajām prasībām un citiem ar to saistītajiem noteikumiem.
LT	Šiuo Schneider Electric deklaruoja, kad šis HMIDT643 atitinka esminius reikalavimus ir kitas 1999/5/EB Direktyvos nuostatas
HU	A Schneider Electric ezzennel kijelenti, hogy a HMIDT643 típusú beren-dezés teljesíti az alapvető követelményeket és más 1999/5/EK irányelvben meghatározott vonatkozó rendelkezéseket.
NL	Hierbij verklaart Schneider Electric dat het toestel l HMIDT643 in overeenstemming is met de essentiële eisen en de andere relevante bepalin-gen van richtlijn 1999/5/EG.
PL	Niniejszym Schneider Electric deklaruje że HMIDT643 jest zgodny z zasadniczymi wymaganiami i innymi właściwymi postanowieniami Dyrektywy 1999/5/EC.
PT	Eu, Schneider Electric, declaro que o HMIDT643 cumpre os requisitos essenciais e outras provisões relevantes da Directiva 1999/5/EC.

RO	Prin prezenta, Schneider Electric, declară că aparatul HMIDT643 este în conformitate cu cerințele esențiale și cu alte prevederi pertinente ale Directivei 1999/5/CE.
SK	Schneider Electric týmto vyhlasuje, že HMIDT643 spĺňa základné požiadavky a všetky príslušné ustanovenia Smernice 1999/5/ES.
SL	Schneider Electric izjavlja, da je ta HMIDT643 v skladu z bistvenimi zahtevami in drugimi relevantnimi določili direktive 1999/5/ES.
FI	Schneider Electric vakuuttaa täten että HMIDT643 tyyppinen laite on direktiivin 1999/5/EY oleellisten vaatimusten ja sitä koskevien direktiivin muiden ehtojen mukainen.
SV	Denna utrustning är i överensstämmelse med de väsentliga kraven och andra relevanta bestämmelser i direktiv 1999/5/EC.

China

1.HMIDT643的使用方法

- 使用频率：2.4 - 2.4835 GHz
  等效全向辐射功率(EIRP)：
  天线增益 < 10dBi时：≤100 mW 或≤20 dBm
- 最大功率谱密度：
  天线增益 < 10dBi时：≤10 dBm / MHz(EIRP)
- 载频容限：20 ppm
- 带外发射功率(在2.4-2.4835GHz頻段以外) ≤-80 dBm / Hz (EIRP)
- 杂散发射(辐射)功率(对应载波±2.5倍信道带宽以外)：
  ≤-36 dBm / 100 kHz (30 - 1000 MHz)
  ≤-33 dBm / 100 kHz (2.4 - 2.4835 GHz)
  ≤-40 dBm / 1 MHz (3.4 - 3.53 GHz)
  ≤-40 dBm / 1 MHz (5.725 - 5.85 GHz)
  ≤-30 dBm / 1 MHz (其它1 - 12.75 GHz)

2.不得擅自更改发射频率、加大发射功率(包括额外加装射频功率放大器)，不得擅自外接天线或改用其它发射天线；

3.使用时不得对各种合法的无线电通信业务产生有害干扰；一旦发现有干扰现象时，应立即停止使用，并采取措施消除干扰后方可继续使用；

4.使用微功率无线电设备，必须忍受各种无线电业务的干扰或工业、科学及医疗应用设备的辐射干扰；

5.不得在飞机和机场附近使用。

Korea

해당 무선설비는 운용 중 전파혼신 가능성이 있음

사용자안내문

기 종 별	사 용 자 안 내 문
A급 기기 (업무용 방송통신기자재)	이 기기는 업무용(A급) 전자파적합기기로서 판매자 또는 사용자는 이 점을 주의하시기 바라며, 가정외의 지역에서 사용하는 것을 목적 으로 합니다.

해당 무선설비는 전파혼신 가능성이 있으므로 인명안전과 관련된 서비스는 할 수 없습니다

Taiwan

低功率電波輻射性電機管理辦法

第十二條

經型式認證合格之低功率射頻電機，非經許可，公司、商號或使用者均不得擅自變更頻率、加大功率或變更原設計之特性及功能。

第十四條

低功率射頻電機之使用不得影響飛航安全及干擾合法通信；經發現有干擾現象時，應立即停用，並改善至無干擾時方得繼續使用。前項合法通信，指依電信法規定作業之無線電通信。低功率射頻電機須忍受合法通信或工業、科學及醫療用電波輻射性電機設備之干擾。

Japan

HMIDT643 には、認証済み無線機器を搭載しています。

Chapter 2
Device Connectivity

What Is in This Chapter?

This chapter contains the following topics:

Topic	Page
System Design	36
Accessories	38

System Design

Box Module

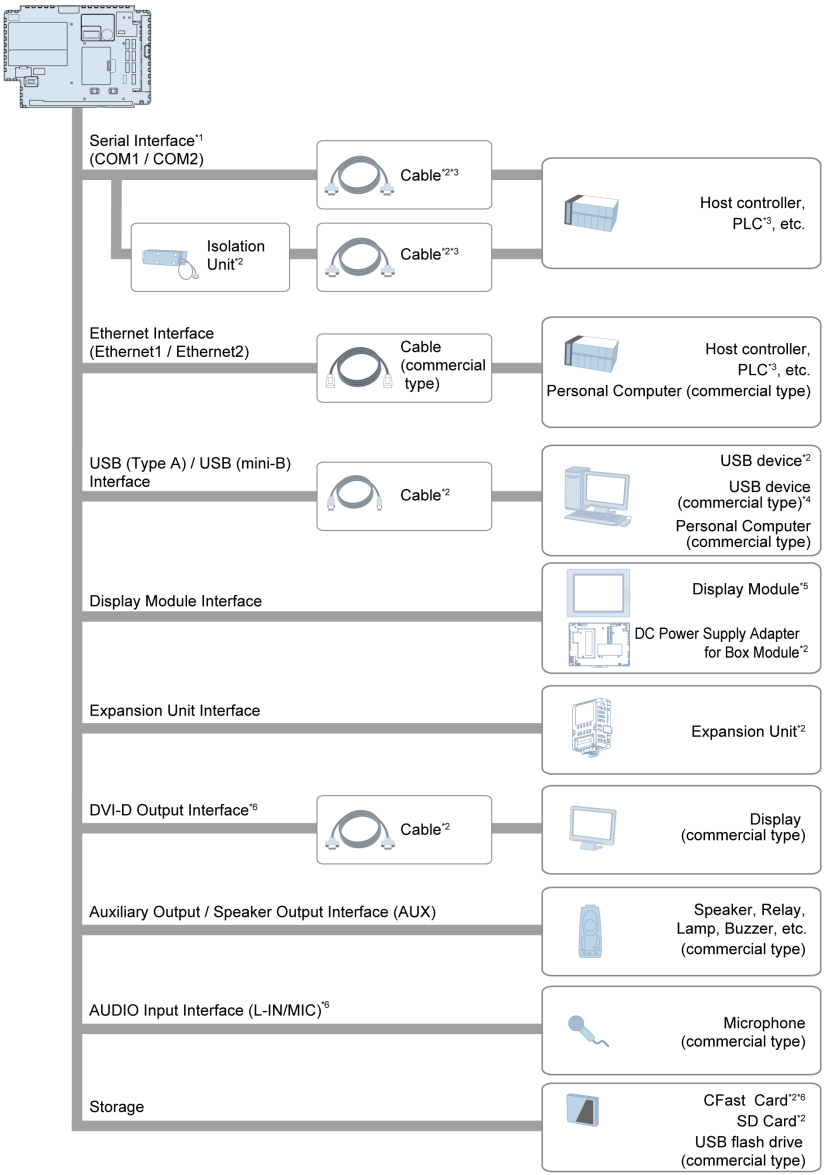

*1 In order to use this as an isolation port, Isolation Unit is required. To use RS-232C isolation unit, set the #9 pin of the COM port to VCC. (Only for COM2)

*2 Refer to Accessories *(see page 38)*.

*3 For information on how to connect controllers and other types of equipment, refer to the corresponding device driver manual of your screen editing software.

*4 For supported models, contact your local Schneider Electric support representative.

*5 Refer to the Part Numbers *(see page 17)*.

*6 Only for Open Box.

NOTE: When working with the Open Box, refer to both this manual and Help Guide included on the provided restore DVD.

Display Module

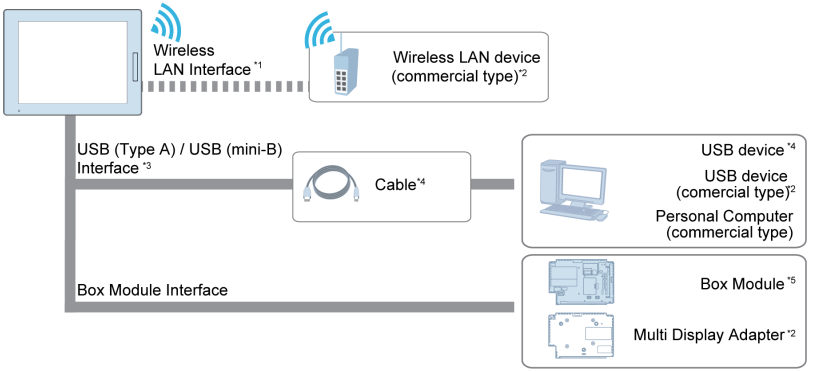

*1 Only for Wireless LAN model *(see page 16)*.

*2 For supported models, contact your local Schneider Electric support representative.

*3 Only for Smart Display. Refer to the Part Numbers *(see page 17)*.

*4 Refer to Accessories *(see page 38)*.

*5 Refer to the Part Numbers *(see page 17)*.

NOTE: When using wireles LAN models with the Open Box, for the wireless LAN settings, refer to the Magelis GTU Open Box Wireless LAN Setting Manual. When using wireless LAN models with the Premium Box, refer to your screen editing software manual.

Accessories

For host controllers and connection cables, refer to the corresponding device driver manual of your screen editing software.

Product Name		Product Number	Supported Product	Description
Serial Interface	RJ-45 to D-Sub 25 pin Conversion Cable	XBTZG939	Box Module	Connects a D-Sub 25-pin cable to this product (RJ-45).
	9-pin to 25-pin RS-232C Conversion Cable	XBTZG919	Box Module	Connects a standard RS-232C cable (D-Sub 25-pin socket) to this product (D-sub 9 pin plug).
	RS-232C Isolation Unit	XBTZGI232	Box Module	Connects a host controller to this product and provides isolation. (RS-232C and RS-422 are switchable.)
USB (Type A) Interface USB Interface	USB Transfer Cable *1 *3	XBTZG935	Box Module Smart Display	Downloads project data via USB Interface.
	USB Front Cable	XBTZGUSB	Box Module	Extension cable that attaches USB interface to front panel.
	USB-Serial (RS-232C) Conversion Cable*3	HMIZURS	Premium Box	Cable for converting a USB interface into a serial interface (RS-232C). Allows connection to modems or bar code readers that support RS-232C.
	USB Illuminated Switch*3	HMIZRA1	Premium Box	A unit of 5 illuminated switches with multiple color LED connected to this product via USB.
	Biometric USB Switch*3	XB5S5B2L2	Box Module	Fingerprint recognition unit connected to this product via USB.
	USB Keyboard*3	HMIZKB1	Box Module Smart Display	Numpad easily connected with this product via USB.
	USB Tower Light Tube Mounting with Fixing Plate*3	XVGU3SHAV	Box Module	Tower light connected to this product via USB (with Fixing Plate).
	USB Tower Light Base Mounting*3	XVGU3SWV	Box Module	Tower light connected to this product via USB (Base Mounting).

Product Name		Product Number	Supported Product	Description
USB (mini-B) Interface	USB Transfer Cable (USB Type A/ mini-B)*1 *2	BMXXCAUSBH018	Box Module Smart Display	Cable for transferring screen data from a PC (USB Type A) to this product (USB mini-B) (1.8 m [5.91 ft]).
	USB Transfer Cable (USB Type A/ mini-B)*1 *2	BMXXCAUSBH045	Box Module Smart Display	Cable for transferring screen data from a PC (USB Type A) to this product (USB mini-B) (4.5 m [14.76 ft]).
	Remote USB Port Location for Mini-USB	HMIZSUSBB	Box Module	Extension cable that attaches to the USB (mini-B) interface on the front side of the operation panel.
Display Module Interface	DC Power Supply Adapter for Box Module	HMIZMDAEX	Box Module	DIN rail mount 24 Vdc power supply adapter that attaches to the side of Box Module when Box Module and Display Module are located separately.
Box Module Interface	Multi Display Adapter	HMIZMDARX	Display Module	Adapter that attaches to the rear of Display Modules when Box Module and Display Module are located separately (one adapter is required for each display if connecting multiple Display Modules to a single Box Module).
Expansion Unit Interface	PROFIBUS DP Slave/MPI Unit	HMIZGPDP	Box Module	Expansion unit that enables participation of this product in the PROFIBUS network and communication with the PROFIBUS DP master or in the MPI network. (Communication speed: 12 Mbps).
	CANopen Slave Unit	HMIZGCAN	Box Module	Expansion unit that enables participation of this product in the CANopen network and communication with the CANopen master.

Product Name		Product Number	Supported Product	Description
DVI-D Output Interface	DVI-D Cable	HMIYCABDVI1011	Open Box	DVI-D 24 pin male (10 m [32.80 ft]).
Auxiliary output/Speaker Output Interface	Auxiliary Connector for Universal Box	HMIZGAUX	Box Module	AUX connector required in case an external output is used (5 pcs/set).
Storage	SD Memory Card (4 GB)*4 *5	HMIZSD4G	Box Module	SD Memory Card (4 GB, MLC, CLASS 4)
	CFast Card (32 GB)*4	HMIZCFA32	Open Box	CFast Card (32 GB, SLC) for CFast Card Slot (Storage)
Screen Protection Sheet		HMIZG65	10.4-inch Display Module	Disposable, dirt-resistant sheet for the display (5 sheets/set)
		HMIZG66	12.1-inch Display Module	
		MPCYK50SPSKIT	15-inch Display Module	
		HMIZG63	7.0-inch Wide Display Module	
		HMIZG65W	10.1-inch Wide Display Module	
		HMIZG66W	12.1-inch Wide Display Module	

Product Name	Product Number	Supported Product	Description
UV Protection Sheet	HMIZUV5	10.4-inch Display Module	Sheet to protect the display from dirt and ultraviolet light (1 piece)
	HMIZUV6	12.1-inch Display Module	
	HMIZUV7	15-inch Display Module	
	HMIZUV3W	7.0-inch Wide Display Module	
	HMIZUV5W	10-inch Wide Display Module	
	HMIZUV6W	12-inch Wide Display Module	
Panel Cutout Adapter	XBTZGCO3	10.4-inch Display Module	Panel cutout adapter for mounting 10.4-inch Display Module in cutout for XBT F034
	XBTZGCO4	10.4-inch Display Module	Panel cutout adapter for mounting 10.4-inch Display Module in cutout for XBT G5330, XBT GT5230, XBT GT6330, XBT GT6340, or HMIGTO6310
	HMIZGCO1	7.0-inch Wide Display Module	Panel cutout adapter for mounting 7.0-inch Wide Display Module in cutout for XBT GT4230/4330/4340 or HMIGTO3510/4310
Environmental Cover	HMIZDCOV5	10.4-inch Display Module	Environmental resistant cover for the display (1 piece)
	HMIZDCOV6	12.1-inch Display Module	
	HMIZDCOV7	15-inch Display Module	
Battery for Memory Backup	HMIZGBAT	Box Module	Primary battery for time data backup (1 piece)

*1 You can connect using just one of the available USB (Type A/mini-B) interfaces.

*2 When you use the HMIG5U2 with a Smart Display connected, and there are multiple connections with the transfer cable, the front USB (mini-B) interface takes priority.

*3 Make sure your screen editing software supports the product.

*4 You can also use a commercial type.

*5 SD/SDHC card of up to 32 GB.

Maintenance Accessories

Product Name	Product Number	Supported Product	Description
Installation Gasket	HMIZD55	10.4-inch Display Module	Provides dust and moisture resistance when this product is installed into a solid panel (1 piece)
	HMIZD56	12.1-inch Display Module	
	HMIZD57	15-inch Display Module	
	HMIZD53W	7.0-inch Wide Display Module	
	HMIZD55W	10.1-inch Wide Display Module	
	HMIZD56W	12.1-inch Wide Display Module	
USB Clamp Type A (1 port)	HMIZGCLP1	Box Module	Clamp to prevent disconnection of USB cable (USB/A, 1 port, 5 clamps/set)
DC Power Supply Connector	HMIZGPWS	Display Module	Connector to connect DC power supply cables (5 pcs/set)
DC Power Supply Connector (Right-angle)	HMIZGPWS2	Display Module (except 7.0-inch Wide Display Module)	Right-angle connector to connect DC power supply cables (5 pcs/set)
SD Card 1 GB Memory System	HMIZSD1GS	Premium Box	SD memory card (1 GB, SLC, CLASS 6) for System Card
CFast Card 16 GB Memory System	HMIZCFA16S	HMIG5U	CFast Card (16 GB, MLC) for System Card
CFast Card 32 GB Memory System	HMIZCFA32S	HMIG5U2	CFast Card (32 GB, MLC) for System Card

Chapter 3
Parts Identification and Functions

What Is in This Chapter?

This chapter contains the following sections:

Section	Topic	Page
3.1	Box Module	44
3.2	Display Module	52

Section 3.1
Box Module

What Is in This Section?

This section contains the following topics:

Topic	Page
Premium Box	45
Open Box	48
LED Indications	51

Premium Box

HMIG3U

Side	HMIG3U
Front	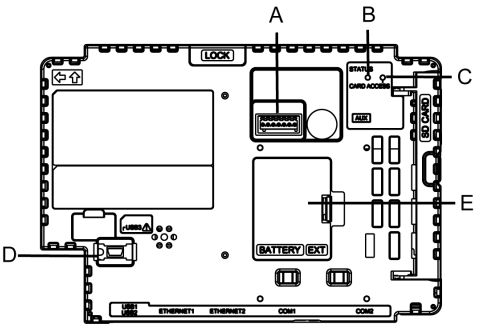
Right	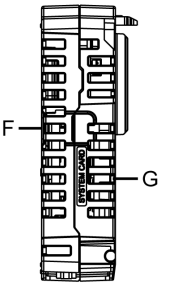
Bottom	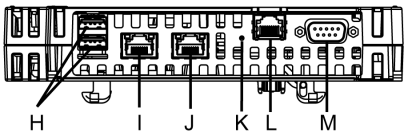

Side	HMIG3U
Rear	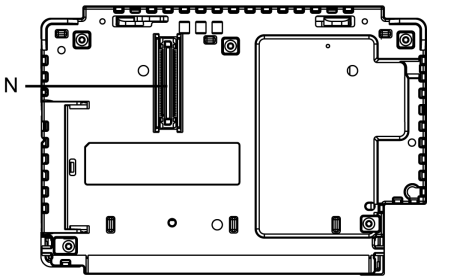

Part	Name	Description
A	Auxiliary Output/ Speaker Output Interface (AUX)	This interface is Alarm Output or Buzzer Output, and Sound Output.
B	Status LED	*(see page 51)*
C	Card Access LED	*(see page 51)*
D	USB (mini-B) Interface	Conforms to USB2.0 (mini-B) x 1. Maximum transmission distance: 5 m (16.4 ft) 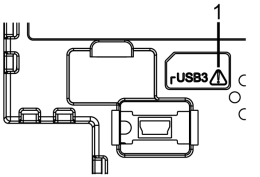 1 This mark identifies safety messages about the Interface Connection *(see page 82)*.
E	Expansion Unit Interface Cover (EXT)	The Expansion Unit can be embedded in the Expansion Unit Interface Cover opening, and Battery for Memory Backup can be connected or replaced.
F	Storage Card Cover	The SD Card is located in the Storage Card Cover opening.
G	System Card Cover	The system card is located in the System Card Cover opening. You cannot open this cover when the Box Module is in operation.
H	USB (Type A) Interface	Conforms to USB2.0 (Type A) x 2. Power supply voltage: 5 Vdc ±5% Maximum current supplied: 500 mA Maximum transmission distance: 5 m (16.4 ft)

Part	Name	Description
I	Ethernet Interface (Ethernet1)	Ethernet transmission interface (10BASE-T/ 100BASE-TX/ 1000BASE-T) Connector: Modular jack (RJ-45) x 1
J	Ethernet Interface (Ethernet2)	Ethernet transmission interface (10BASE-T/ 100BASE-TX/ 1000BASE-T) Connector: Modular jack (RJ-45) x 1
K	COM1 LED	*(see page 51)*
L	Serial Interface (COM1)	RS-485 (Isolation) Serial Interface Connector: Modular jack (RJ-45)x1
M	Serial Interface (COM2)	RS-232C/422/485 Serial Interface (you can switch the communication method via software.) Connector: D-Sub 9 pin (plug) x 1
N	Display Module Interface	Interface that connects the Display Module and Box Module.

⚠ CAUTION

RISK OF BURNING INJURY

Do not connect the Modbus RJ-45 communication cable to the Ethernet interface.

Failure to follow these instructions can result in injury or equipment damage.

Open Box

HMIG5U/HMIG5U2

Side	HMIG5U/HMIG5U2
Front	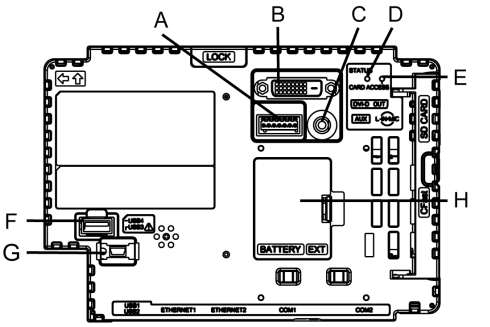
Right	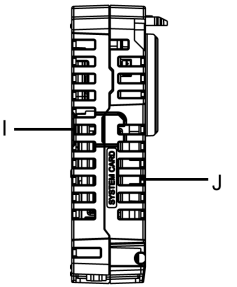
Bottom	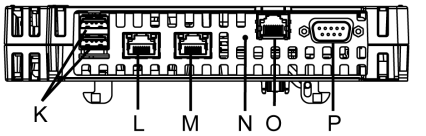

Side	HMIG5U/HMIG5U2
Rear	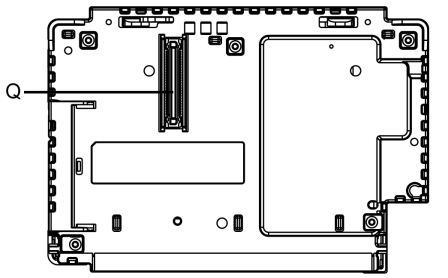

Part	Name	Description
A	Auxiliary Output/Speaker Output Interface (AUX)	This interface is Alarm Output or Buzzer Output, and Sound Output. 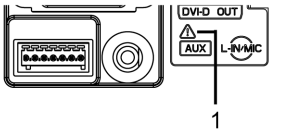 1 This mark identifies safety messages and notes about the AUX Connector *(see page 147)*.
B	DVI-D Output Interface	DVI-D Output Interface
C	AUDIO Input Interface (L-IN/MIC)	This interface connects a microphone. Use for mini jack connector (∅3.5 mm [0.14 in]).
D	Status LED	*(see page 51)*
E	Card Access LED	*(see page 51)*
F	USB (Type A) Interface	Conforms to USB2.0 (Type A) x 1. Power supply voltage: 5 Vdc ±5% Maximum current supplied: 500 mA Maximum transmission distance: 5 m (16.4 ft)
G	USB (mini-B) Interface	Conforms to USB2.0 (mini-B) x 1. Maximum transmission distance: 5 m (16.4 ft) 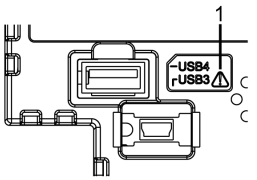 1 This mark identifies safety messages about the Interface Connection *(see page 82)*.

Part	Name	Description
H	Expansion Unit Interface Cover (EXT)	The Expansion Unit can be embedded in the Expansion Unit Interface Cover opening, and Battery for Memory Backup can be connected or replaced.
I	Storage Card Cover	The SD and CFast Card are located in the Storage Card Cover opening.
J	System Card Cover	The system card is located in the System Card Cover opening. Do not open this cover when the Box Module is in operation.
K	USB (Type A) Interface	Conforms to USB2.0 (Type A) x 2. Power supply voltage: 5 Vdc ±5% Maximum current supplied: 500 mA Maximum transmission distance: 5 m (16.4 ft)
L	Ethernet Interface (Ethernet1)	Ethernet transmission interface (10BASE-T/ 100BASE-TX/ 1000BASE-T) Connector: Modular jack (RJ-45) x 1
M	Ethernet Interface (Ethernet2)	Ethernet transmission interface (10BASE-T/ 100BASE-TX/ 1000BASE-T) Connector: Modular jack (RJ-45) x 1
N	COM1 LED	*(see page 51)*
O	Serial Interface (COM1)	RS-485 (Isolation) Serial Interface. Connector: Modular jack (RJ-45) x 1
P	Serial Interface (COM2)	RS-232C/422/485 Serial Interface (you can switch the communication method via software). Connector: D-Sub 9 pin (plug) x 1
Q	Display Module Interface	Interface that connects the Display Module and Box Module.

⚠ CAUTION

RISK OF BURNING INJURY

Do not connect the Modbus RJ-45 communication cable to the Ethernet interface.

Failure to follow these instructions can result in injury or equipment damage.

LED Indications

Status LED

Color	Indicator	HMIG3U	HMIG5U/HMIG5U2
Green	ON	In operation	
Orange	Flashing	Software starting up	
Red	ON	Power is ON.	
Red/Green	Alternating	Display Module connection error.	
Orange/Red	Alternating	SD Card boot error.	--
--	OFF	Power is OFF.	

Card Access LED

Color	Indicator	HMIG3U	HMIG5U/HMIG5U2
Green	ON	Storage Card is being accessed.	Storage Card or System Card (OS) is being accessed.
--	OFF	Storage Card is not inserted or accessed.	Storage Card or System Card (OS) is not accessed.

COM1 LED

Color	Indicator	Description
Yellow	ON	Data transmission is in progress.
--	OFF	No data transmission.

Section 3.2
Display Module

What Is in This Section?

This section contains the following topics:

Topic	Page
Smart Display	53
Advanced Display	57
LED Indications	60

Smart Display

HMIDT542

Side	HMIDT542
Front	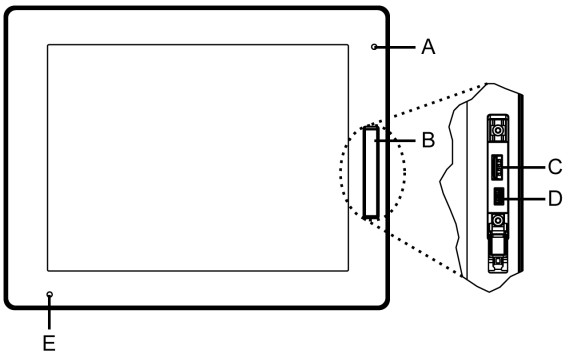
Rear	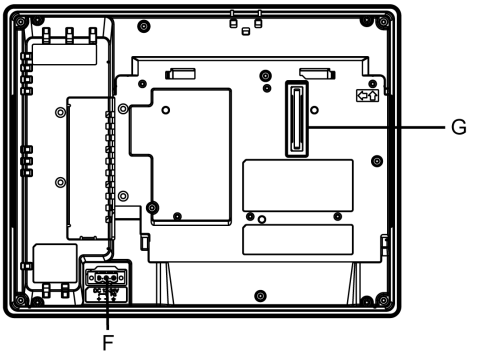

Part	Name	Description
A	Brightness Sensor	Brightness sensor which automatically controls the brightness of the backlight.
B	Front USB Cover	USB (Type A) Interface and USB (mini-B) Interface are located in the Front USB Cover opening.
C	USB (Type A) Interface	Conforms to USB2.0 (Type A) x 1. Power supply voltage: 5 Vdc ±5% Maximum current supplied: 500 mA Maximum transmission distance: 5 m (16.4 ft)

Part	Name	Description
D	USB (mini-B) Interface	Conforms to USB2.0 (mini-B) x 1. Maximum transmission distance: 5 m (16.4 ft)
E	Status LED	*(see page 60)*
F	Power Plug Connector	-
G	Box Module Interface	Interface that connects the Display Module and Box Module.

HMIDT642/HMIDT643

Side	HMIDT642/HMIDT643
Front	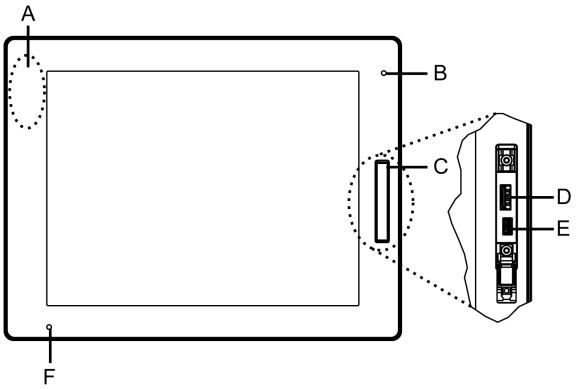
Rear	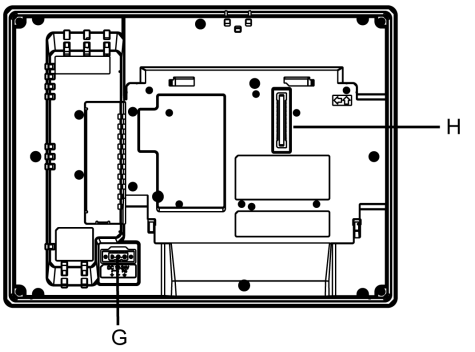

Part	Name	Description
A	Wireless LAN Antenna	A built-in antenna for wireless LAN (only for HMIDT643).
B	Brightness Sensor	Brightness sensor which automatically controls the brightness of the backlight.
C	Front USB Cover	USB (Type A) Interface and USB (mini-B) Interface are located in the Front USB Cover opening.
D	USB (Type A) Interface	Conforms to USB2.0 (Type A) x 1. Power supply voltage: 5 Vdc ±5% Maximum current supplied: 500 mA Maximum transmission distance: 5 m (16.4 ft)
E	USB (mini-B) Interface	Conforms to USB2.0 (mini-B) x 1. Maximum transmission distance: 5 m (16.4 ft)
F	Status LED	*(see page 60)*
G	Power Plug Connector	-
H	Box Module Interface	Interface that connects the Display Module and Box Module.

HMIDT732

Side	HMIDT732
Front	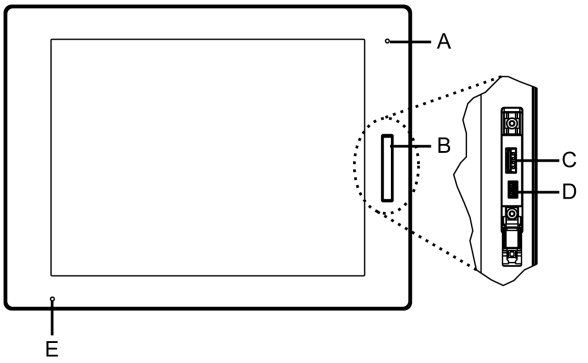

Side	HMIDT732
Rear	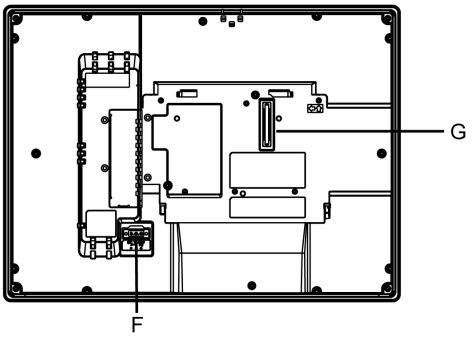

Part	Name	Description
A	Brightness Sensor	Brightness sensor to automatically control the brightness of the backlight.
B	Front USB Cover	USB (Type A) Interface and USB (mini-B) Interface are located in the Front USB Cover opening.
C	USB (Type A) Interface	Conforms to USB2.0 (Type A) x 1. Power supply voltage: 5 Vdc ±5% Maximum current supplied: 500 mA Maximum transmission distance: 5 m (16.4 ft)
D	USB (mini-B) Interface	Conforms to USB2.0 (mini-B) x 1. Maximum transmission distance: 5 m (16.4 ft)
E	Status LED	*(see page 60)*
F	Power Plug Connector	-
G	Box Module Interface	Interface that connects the Display Module and Box Module.

Advanced Display

HMIDT351

Side	HMIDT351
Front	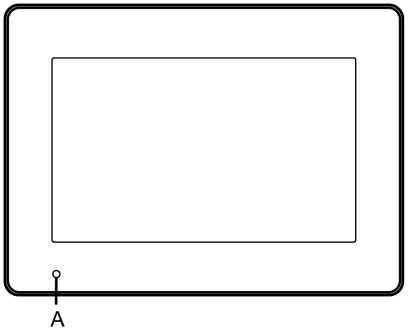
Rear	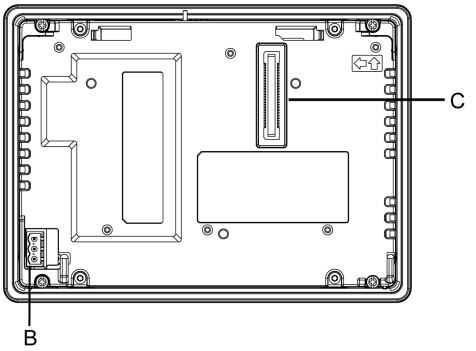

Part	Name	Description
A	Status LED	*(see page 60)*
B	Power Plug Connector	-
C	Box Module Interface	Interface that connects the Display Module and Box Module.

HMIDT551

Side	HMIDT551
Front	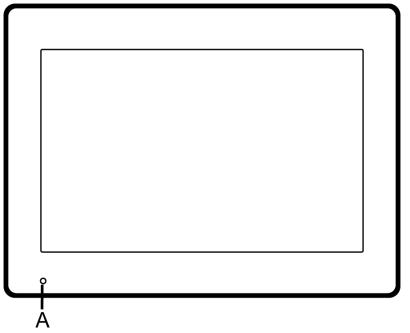
Rear	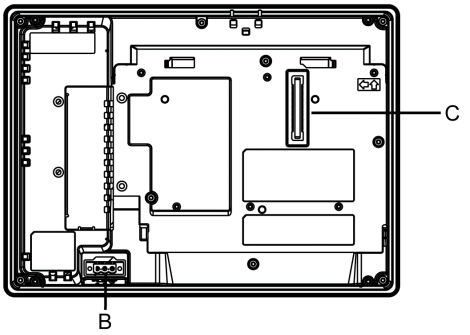

Part	Name	Description
A	Status LED	*(see page 60)*
B	Power Plug Connector	-
C	Box Module Interface	Interface that connects the Display Module and Box Module.

HMIDT651

Side	HMIDT651
Front	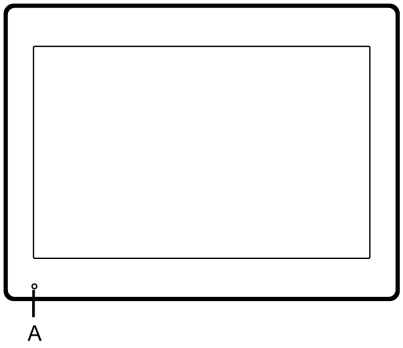
Rear	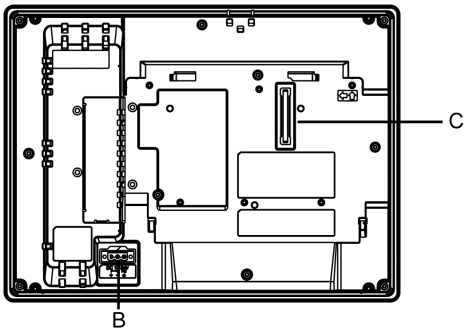

Part	Name	Description
A	Status LED	*(see page 60)*
B	Power Plug Connector	-
C	Box Module Interface	Interface that connects the Display Module and Box Module.

LED Indications

Status LED

Color	Indicator	Description	
		Connected to HMIG3U	Connected to HMIG5U/HMIG5U2
Green	ON	In operation	
	LED fade*1	Backlight OFF (Standby Mode)	
Orange	Flashing	Software starting up	
Red	ON	Power is ON.	
Red/Green	Alternating	Box Module connection error	
Orange/Red	Alternating	SD Card boot error	--
Orange/Red/Green	Alternating	Display Module internal error	
--	OFF	Power is OFF.	

*1 Make sure your screen editing software supports the function.

NOTE: When the HMIG5U or HMIG5U2 is connected, even if its operating system is shut down, the status LED on the Display Module will display red if connected to a power supply.

Chapter 4
Specifications

What Is in This Chapter?

This chapter contains the following sections:

Section	Topic	Page
4.1	General Specifications	62
4.2	Functional Specifications	71
4.3	Interface Specifications	77

Section 4.1
General Specifications

What Is in This Section?

This section contains the following topics:

Topic	Page
Electrical Specifications	63
Environmental Specifications	66
Structural Specifications	68

Electrical Specifications

NOTE: The power consumption for the combined unit of Box Module and Display Module equals the sum of power consumption of the two modules.

Box Module

Specification			HMIG3U	HMIG5U	HMIG5U2
Power Supply	Rated Input Voltage		12 Vdc (Supply from Display Module or DC Power Supply Adapter for Box Module*1)		
	Power Consumption (Primary Power Supply including power loss)	Max	25 W	35 W	25 W
		When power is not supplied to external devices	12.5 W or less	22.5 W or less	15 W or less

*1 Use SELV (Safety Extra-Low Voltage) circuit and LIM (Limited Energy) circuit for DC input.

Display Module

Specification			HMIDT542	HMIDT642	HMIDT643	HMIDT732
Power Supply	Rated Input Voltage		12...24 Vdc			
	Input Voltage Limits		10.8...28.8 Vdc			
	Voltage Drop		12 Vdc: 1.25 ms or less 24 Vdc: 5 ms or less			
	Power Consumption (Primary Power Supply including power loss)	Max (Including Box Module)	50 W	56 W	58 W	57 W
		Max (Display Module only)*1	15 W	21 W	23 W	22 W
		When power is not supplied to external devices (Display Module only)*1	12 W or less	18 W or less	20 W or less	19 W or less
		When screen turns off the backlight (Standby Mode) (Display Module only)*1	6 W or less		8 W or less	6 W or less
		When screen backlight 20% (Display Module only)*1	8 W or less	11 W or less	13 W or less	11 W or less
	In-Rush Current		30 A or less			
Voltage Endurance			1,000 Vac, 20 mA for 1 minute (between charging and FG terminals)			
Insulation Resistance			500 Vdc, 10 MΩ or more (between charging and FG terminals)			

*1 The power consumption for the combined unit of Box Module and Display Module equals the sum of the power consumption for the Modules.

Specification			HMIDT351	HMIDT551	HMIDT651
Power Supply	Rated Input Voltage		12...24 Vdc		
	Input Voltage Limits		10.8...28.8 Vdc		
	Voltage Drop		12 Vdc: 1.25 ms or less 24 Vdc: 5 ms or less		
	Power Consumption (Primary Power Supply including power loss)	Max (Including Box Module)	41 W	43 W	45 W
		Max (Display Module only)*1	6.5 W	8.5 W	11.5 W
		When power is not supplied to external devices (Display Module only)*1	-		
		When screen turns off the backlight (Standby Mode) (Display Module only)*1	2 W or less	2.5 W or less	2.5 W or less
		When screen backlight 20% (Display Module only)*1	4 W or less	5 W or less	6 W or less
	In-Rush Current		30 A or less		
Voltage Endurance			1,000 Vac, 20 mA for 1 minute (between charging and FG terminals)		
Insulation Resistance			500 Vdc, 10 MΩ or more (between charging and FG terminals)		

*1 The power consumption for the combined unit of Box Module and Display Module equals the sum of the power consumption for the Modules.

Environmental Specifications

Box Module / Display Module

Physical Environment	Ambient Air Temperature	0...60 °C (32...140 °F)
	Storage Temperature	-20...60 °C (-4...140 °F)
	Ambient Air and Storage Humidity	10%...90% RH (Non condensing, wet bulb temperature 39 °C [102.2 °F] or less)
	Dust	0.1 mg/m^3 (10^{-7} oz/ft^3) or less (non-conductive levels)
	Pollution Degree	For use in Pollution Degree 2 environment
	Corrosive Gases	Free of corrosive gases
	Atmospheric Pressure (Operating Altitude)	800...1,114 hPa (2,000 m [6,561 ft] or lower)
Mechanical Environment	Vibration Resistance	IEC/EN 61131-2 compliant 5...9 Hz Single amplitude 3.5 mm (0.14 in) 9...150 Hz Fixed acceleration: 9.8 m/s^2 X, Y, Z directions for 10 cycles (approx. 100 min.)
	Shock Resistance	IEC/EN 61131-2 compliant 147 m/s^2, X, Y, Z directions for 3 times
Electrical Environment	Noise Immunity	Noise Voltage: 1,000 Vp-p Pulse Duration: 1 µs Rise Time: 1 ns (via noise simulator)
	Electrostatic Discharge Immunity	Contact Discharge Method: 6 kV Air Discharge Method: 8 kV (IEC/EN 61000-4-2 Level 3)

NOTE: When using any of the options for this product, check the specifications for special conditions or cautions that may apply to this product.

Air quality requirements

Do not operate or store the panel where chemicals evaporate, or where chemicals are present in the air:

- Corrosive chemicals: Acids, alkalines, liquids containing salt.
- Flammable chemicals: Organic solvents.

⚠ CAUTION
INOPERATIVE EQUIPMENT Do not allow water, liquids, metal, and wiring fragments to enter the panel case. **Failure to follow these instructions can result in injury or equipment damage.**

Structural Specifications

Box Module

	HMIG3U	HMIG5U/HMIG5U2
Cooling Method	Natural air circulation	
External Dimensions (W x H X D)	188 x 131 x 35 mm (7.4 x 5.16 x 1.38 in)	
Weight	0.9 kg (1.98 lb) or less	

Smart Display

	HMIDT542	HMIDT642 HMIDT643	HMIDT732
Grounding	Functional grounding: Grounding resistance of 100 Ω, 2 mm^2 (AWG 14) or thicker wire, or your country's applicable standard (same for FG and SG terminals).		
Cooling Method	Natural air circulation		
Structure *1	IP66F, IP67F, Type 1, Type 4X (Indoor Use Only)/13 * on the front panel when properly installed in an enclosure and not using the front panel USB port.		
External Dimensions (W x H x D)	272.5 x 214.5 x 67 mm (10.73 x 8.44 x 2.64 in)	315 x 241 x 67 mm (12.4 x 9.49 x 2.64 in)	397 x 296 x 67 mm (15.63 x 11.65 x 2.64 in)
Panel Cut Dimensions (W x H)	259 x 201 mm (10.2 x 7.91 in)*2 Panel thickness area: 1.6...5 mm (0.06...0.2 in)*3	301.5 x 227.5 mm (11.87 x 8.96 in)*2 Panel thickness area: 1.6...5 mm (0.06...0.2 in)*3	383.5 x 282.5 mm (15.1 x 11.12 in)*2 Panel thickness area: 1.6...5 mm (0.06...0.2 in)*3
Weight	2.7 kg (5.9 lb) or less	3.2 kg (7.1 lb) or less	4.5 kg (9.9 lb) or less

*1 The front face of this product, installed in a solid panel, has been tested using conditions equivalent to the standards shown in the specification. Even though this product's level of resistance is equivalent to these standards, oils that should have no effect on this product can possibly harm this product. This can occur in areas where either vaporized oils are present, or where low viscosity cutting oils are allowed to adhere to this product for long periods of time. If this product 's front face protection sheet peels off, these conditions can lead to the ingress of oil into this product and separate protection measures are suggested.

Also, if non-approved oils are present, they may cause deformation or corrosion of the front panel's plastic cover. Therefore, prior to installing this product, be sure to confirm the type of conditions that will be present in this product 's operating environment. If the installation gasket is used for a long period of time, or if this product and its gasket are removed from the panel, the original level of protection cannot be kept. To maintain the original protection level, be sure to replace the installation gasket regularly.

*2 For dimensional tolerance, everything +1/-0 mm (+0.04/-0 in) and R in angle are below R3 (R0.12 in).

*3 Even if the installation wall thickness is within the recommended range for the “Panel Cut Dimensions”, depending on wall’s material, size, and installation location of this product and other devices, the installation wall could warp. To prevent warping, the installation surface may need to be strengthened.

Advanced Display

	HMIDT351	HMIDT551	HMIDT651
Grounding	Functional grounding: Grounding resistance of 100 Ω, 2 mm^2 (AWG 14) or thicker wire, or your country's applicable standard (same for FG and SG terminals).		
Cooling Method	Natural air circulation		
Structure *1	IP66F, IP67F, Type 1, Type 4X (Indoor Use Only)/13 * on the front panel when properly installed in an enclosure.		
External Dimensions (W x H x D)	203.6 x 148.6 x 36 mm (8.02 x 5.85 x 1.42 in)	268.5 x 198.5 x 67 mm (10.57 x 7.81 x 2.64 in)	308.5 x 230.5 x 67 mm (12.15 x 9.07 x 2.64 in)
Panel Cut Dimensions (W x H)	190 x 135 mm (7.48 x 5.31 in)*2 Panel thickness area: 1.6...5 mm (0.06...0.2 in)*3	255 x 185 mm (10.04 x 7.28 in)*2 Panel thickness area: 1.6...5 mm (0.06...0.2 in)*3	295 x 217 mm (11.61 x 8.54 in)*2 Panel thickness area: 1.6...5 mm (0.06...0.2 in)*3
Weight	1.2 kg (2.6 lb) or less	2.5 kg (5.5 lb) or less	3 kg (6.6 lb) or less

*1 The front face of this product, installed in a solid panel, has been tested using conditions equivalent to the standards shown in the specification. Even though this product's level of resistance is equivalent to these standards, oils that should have no effect on this product can possibly harm this product. This can occur in areas where either vaporized oils are present, or where low viscosity cutting oils are allowed to adhere to this product for long periods of time. If this product's front face protection sheet peels off, these conditions can lead to the ingress of oil into this product and separate protection measures are suggested.

Also, if non-approved oils are present, they may cause deformation or corrosion of the front panel's plastic cover. Therefore, prior to installing this product, be sure to confirm the type of conditions that will be present in this product 's operating environment. If the installation gasket is used for a long period of time, or if this product and its gasket are removed from the panel, the original level of protection cannot be kept. To maintain the original protection level, be sure to replace the installation gasket regularly.

*2 For dimensional tolerance, everything +1/-0 mm (+0.04/-0 in) and R in angle are below R3 (R0.12 in).

*3 Even if the installation wall thickness is within the recommended range for the “Panel Cut Dimensions”, depending on wall’s material, size, and installation location of this product and other devices, the installation wall could warp. To prevent warping, the installation surface may need to be strengthened.

⚠ CAUTION

EQUIPMENT DAMAGE

- Ensure this product is not in permanent and direct contact with oils.
- Do not press on the display of this product with excessive force or with a hard object.
- Do not press on the touch panel with a pointed object, such as the tip of a mechanical pencil or a screwdriver.

Failure to follow these instructions can result in injury or equipment damage.

⚠ CAUTION

EQUIPMENT DAMAGE

Do not expose the device to direct sunlight

Failure to follow these instructions can result in injury or equipment damage.

NOTICE

STORAGE AND OPERATION OUTSIDE OF SPECIFICATIONS

- Store the panel in areas where temperatures are within the product’s specifications.
- Do not restrict or block this panel’s ventilation slots.

Failure to follow these instructions can result in equipment damage.

NOTICE

GASKET AGING

- Inspect the gasket periodically as required by your operating environment to keep the initial IP level.
- Change the gasket at least once a year, or as soon as scratches or dirt become visible.

Failure to follow these instructions can result in equipment damage.

Section 4.2
Functional Specifications

What Is in This Section?

This section contains the following topics:

Topic	Page
Display Specifications	72
Memory	74
Clock	75
Touch Panel	76

Display Specifications

Smart Display

	HMIDT542	HMIDT642 HMIDT643	HMIDT732
Display Type	TFT Color LCD		
Display Size	10.4”	12.1”	15”
Resolution	800 x 600 pixels (SVGA)	1,024 x 768 pixels (XGA)	
Resolution Input from Box Module*1	640 x 480 pixels (VGA)*2, 800 x 600 pixels (SVGA), 1,024 x 768 pixels (XGA)		
Effective Display Area (W x H)	211.2 x 158.4 mm (8.31 x 6.24 in)	245.76 x 184.32 mm (9.68 x 7.26 in)	304.1 x 228.1 mm (11.97 x 8.98 in)
Display Colors	16 million colors For details about display colors, refer to the manual for your screen editing software.		
Backlight	White LED (Not user replaceable. When replacement is required, contact your local distributor.)		
Backlight Service Life	50,000 hours or more (continuous operation at 25 °C [77 °F] before backlight brightness decreases to 50%)		
Brightness Control	0...100 (Adjusted with touch panel or software)		

*1 For the resolution settings in your screen editing software, refer to the manual provided with your screen editing software.

*2 This resolution is unsupported by HMIG5U, but can be supported by HMIG5U2. For information, refer to the Help Guide included on the provided restore DVD.

Advanced Display

	HMIDT351	HMIDT551	HMIDT651
Display Type	TFT Color LCD		
Display Size	7”	10.1”	12.1”
Resolution	800 x 480 pixels (WVGA)	1,280 x 800 pixels (WXGA)	
Effective Display Area (W x H)	154.08 x 95.92 mm (6.06 x 3.78 in)	216.96 x 135.6 mm (8.54 x 5.34 in)	261.12 x 163.2 mm (10.28 x 6.43 in)

	HMIDT351	HMIDT551	HMIDT651
Display Colors	262,144 colors		
Backlight	White LED (Not user replaceable. When replacement is required, contact your local distributor.)		
Backlight Service Life	50,000 hours or more (continuous operation at 25 °C [77 °F] before backlight brightness decreases to 50%)		
Brightness Control	0...100 (Adjusted with touch panel or software)		

Memory

	HMIG3U	HMIG5U	HMIG5U2
System Card	SD Card 1 GB (operating system, project data, and other data)	CFast Card 16 GB (operating system, project data, application, and other data)	CFast Card 32 GB (operating system, project data, application, and other data)
Backup Memory	NVRAM 320 KB	NVRAM 320 KB	NVRAM 320 KB

Clock

± 60 seconds per month (deviation at room temperature and power is OFF). Variations in operating conditions and battery life can cause clock deviations from -380 to +90 seconds per month.

For systems where this level of precision is insufficient, the user should monitor and make adjustments when required.

Backup clock data uses a supercapacitor (electric double-layer capacitor) for power. When the voltage from the supercapacitor is low, clock data is lost*1 when this product is turned OFF.

The average period for backup is as follows:

Initial: Approximately 100 days

After 5 years: Approximately 30 days (used at ambient temperature of 25 °C [77 °F])

*1 If clock data is lost, a clock data error message appears when starting up this product. When this happens, leave this product ON for at least 5 minutes, and then set the clock again. Refer to your screen editing software manual on how to set up the clock.

By connecting the optional backup battery (Part Number HMIZGBAT) for clock data backup, you can maintain a backup period of 10 years or more (when used at ambient temperature of 25 °C [77 °F]).

NOTE: When using the Open Box, make sure you shut down the unit after changing clock data.

Touch Panel

	Smart Display	Advanced Display
Touch Panel Type	Resistive Film (analog, multi-touch)	Resistive Film (analog)
Touch Panel Resolution	1,024 x 1,024	1,024 x 1,024
Touch Panel Service Life	1 million times or more	1 million times or more

Section 4.3
Interface Specifications

What Is in This Section?

This section contains the following topics:

Topic	Page
Interface Specifications	78
Interface Connection	82
Serial Interface (RS-485 [Isolation]) for COM1	86
Serial Interface (RS-232C and RS-422/RS-485) for COM2	87
Auxiliary Output/Speaker Output Interface (AUX)	90
DVI-D Output Interface (only for Open Box)	91

Interface Specifications

Box Module

		HMIG3U	HMIG5U/HMIG5U2
Serial Interface COM1	Asynchronous Transmission	RS-485 (isolation)	
	Data Length	7 or 8 bits	
	Stop Bit	1 or 2 bits	
	Parity	None, odd, or even	
	Data Transmission Speed	2,400 (1,200)...115,200 bps, 187,500 bps (MPI)	2,400 (1,200)...115,200 bps
	Connector	Modular jack (RJ-45)	
Serial Interface COM2	Asynchronous Transmission	RS-232C/422/485	
	Data Length	7 or 8 bits	
	Stop Bit	1 or 2 bits	
	Parity	None, odd, or even	
	Data Transmission Speed	2,400 (1,200)...115,200 bps, 187,500 bps (MPI)	2,400 (1,200)...115,200 bps
	Connector	D-Sub 9 pin (plug)	
USB (Type A) Interface	Connector	USB 2.0 (Type A) x 2	USB 2.0 (Type A) x 3
	Power Supply Voltage	5 Vdc ±5%	
	Maximum Current Supplied	500 mA/port	500 mA/port, 1 A total for 3 ports
	Maximum Transmission Distance	5 m (16.4 ft)	
USB (mini-B) Interface	Connector	USB 2.0 (mini-B) x 1	
	Maximum Transmission Distance	5 m (16.4 ft)	
Ethernet Interface	Standard	IEEE802.3i/IEEE802.3u/IEEE802.3ab, 10BASE-T/ 100BASE-TX/ 1000BASE-T[*1]	
	Connector	Modular jack (RJ-45) x 2	
SD Card Interface	SD Card	SD Card Slot (System) x 1 SD Card Slot (Storage) x 1	SD Card Slot (Storage) x 1

		HMIG3U	HMIG5U/HMIG5U2
CFast Card Interface	CFast Card	-	CFast Card Slot (System) x 1 CFast Card Slot (Storage) x 1
Expansion Unit Interface	Expansion Unit	Fieldbus Unit x 1	
Video Interface	DVI-D	-	DVI-D OUT
	Connector		DVI-D 24 pin (socket) x 1
	Resolution		HMIG5U: Up to 1,024 x 768 pixels (XGA) HMIG5U2: Up to 1,920 x 1,200 pixels (WUXGA, VESA compatible)
Sound Input Interface	Sound Input	-	MIC or LINE input (software switch)
	Connector		MINI-JACK ∅3.5 x 1
Sound Output Interface	Speaker Output	300 mW (Rated Load: 8 Ω, Frequency: 1 kHz)	
	LINE Output	Rated load: 10 kΩ or more	
	Connector	2-piece terminal block (AUX) x 1	
AUX Output Interface	AUX Output	Alarm Output/Buzzer Output	
	Rated Voltage	24 Vdc	
	Rated Current	50 mA	
	Connector	2-piece terminal block (AUX) x 1	

*1 For 1000BASE-T communication, use twisted pair Ethernet cables with a rating of category 5 or higher.

Display Module

		Smart Display
USB (Type A) Interface	Connector	USB 2.0 (Type A) x 1
	Power Supply Voltage	5 Vdc ±5%
	Maximum Current Supplied	500 mA
	Maximum Transmission Distance	5 m (16.4 ft)
USB (mini-B) Interface	Connector	USB 2.0 (mini-B) x 1
	Maximum Transmission Distance	5 m (16.4 ft)

		Smart Display	
Wireless LAN Interface[*1]	Standards	IEEE802.11b/IEEE802.11g/IEEE802.11n	
	Frequency Bandwidth	2.4 GHz	
	Channel Bandwidth	20 MHz	
	Channel	Access Point mode[*2]: 1...11 ch Client mode [*3]:	
		• North America US: 1...11 ch • Europe EU: 1...13 ch • China CN: 1...13 ch	• Japan JP: 1...13 ch • Korea KR: 1...13 ch • Taiwan TW: 1...11 ch
	Transmission Speed	IEEE802.11b: max 11 Mbps IEEE802.11g: max 54 Mbps IEEE802.11n: max 72.2 Mbps	
	Transmission Distance[*4]	Distance varies depending on application software and surrounding environment	
	Action Mode	Client mode/Access Point mode	
	Communication Mode	Infrastructure	
	Network Authentication	Open, WPA-Personal, WPA2-Personal	
	Data Encryption	WEP (128 bit) (Open)[*5], AUTO/TKIP (WPA-Personal), AES (WPA2-Personal)	
	Maximum Client Connections	10[*6]	
	Antenna	Built into the bezel	

*1 Only for HMIDT643

*2 In Access Point mode, IEEE802.11d is not supported.

*3 Based on the country information regarding surrounding Access Point. If the surrounding access points do not support IEEE802.11d, channels are limited, from 1 to 11 ch.

*4 You can connect only from the front of the display. The connection angle and distance depend on your operating environment, applications in use, and target communication devices. Conduct an operation test, including directivity, in the operating environment before use.

*5 In Access Point mode, WEP is not supported.

*6 Request for the eleventh connection will be denied. The maximum number of connections you can have with reasonable communication performance depends on the operating environment, applications in use, and target communication devices. Conduct an operation test, including the number of connections, in the operating environment before use.

⚠ WARNING

UNINTENDED OPERATION

- Do not use wireless communication to control machinery.
- Wireless communication system design must take into account the possibility of communication interference.

Failure to follow these instructions can result in death, serious injury, or equipment damage.

Interface Connection

Introduction

Use only the SELV (Safety Extra-Low Voltage) circuit to connect the serial, USB and Ethernet interfaces.

Cable Connections

⚠ DANGER

POTENTIAL FOR EXPLOSION

- Always confirm the ANSI/ISA 12.12.01 or CSA C22.2 N°213 hazardous location rating of your device before installing or using it in a hazardous location.
- To apply or remove the supply power from this product installed in a Class I, Division 2 hazardous location, you must either:
  - Use a switch located outside the hazardous environment, or;
  - Use a switch certified for Class I, Division 1 operation inside the hazardous area.
- Do not connect or disconnect equipment unless power has been switched off or the area is known to be non-hazardous. This applies to all connections including power, ground, serial, parallel, and network connections.
- Never use unshielded / ungrounded cables in hazardous locations.
- Use only non-incendiary USB devices.
- Use the USB (mini-B) interface for temporary connection only during maintenance and setup of the device.
- Do not use the USB (mini-B) interface in hazardous locations.
- When enclosed, keep enclosure doors and openings closed at all times to avoid the accumulation of foreign matter inside the workstation.

Failure to follow these instructions will result in death or serious injury.

Division 2 hazardous location regulations require that all cable connections be provided with adequate strain relief and positive interlock. Use only non-incendive USB devices as USB connections do not provide adequate strain relief to allow the use of the USB connections of this product *(see page 83)*. Never connect or disconnect a cable while power is applied at either end of the cable. All communication cables should include a chassis ground shield. This shield should include both copper braid and aluminum foil. The D-sub style connector housing must be a metal conductive type (for example, molded zinc) and the ground shield braid must be terminated directly to the connector housing. Do not use a shield drain wire.

The outer diameter of the cable must be suited to the inner diameter of the cable connector strain relief so that a reliable degree of strain relief is maintained. Always secure the D-sub connectors to the workstation-mating connectors via the two screws located on both sides.

USB Connection

Non-incendive field wiring apparatus (keyboards, mouse) are permitted for use on the front USB port (Type A) of associated field wiring non-incendive apparatus (this product). Non-incendive field wiring apparatus (this product) are permitted for use on front USB port (mini B) of associated field wiring non-incendive apparatus (Computer).

In addition to being non-incendive, any equipment connected to the front USB ports must satisfy the following criteria.

The following figure shows the USB cable wiring:

<Type A>

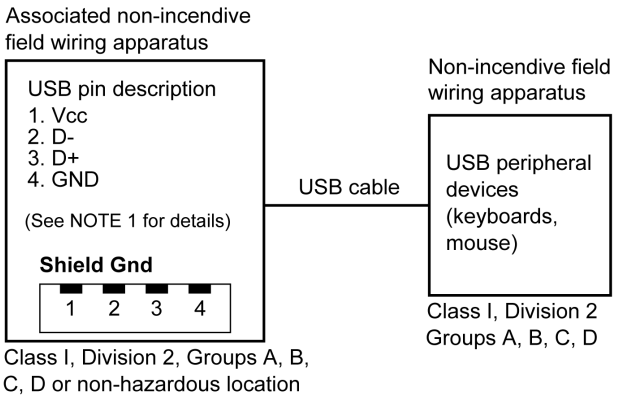

Circuit Parameters	Front USB (Type A)
Open-circuit voltage = V_{oc}	5.25 Vdc
Short-circuit current = I_{sc}	1300 mA
Associated capacitance = C_a	265 µF
Associated inductance = L_a	16 µH

<mini B>

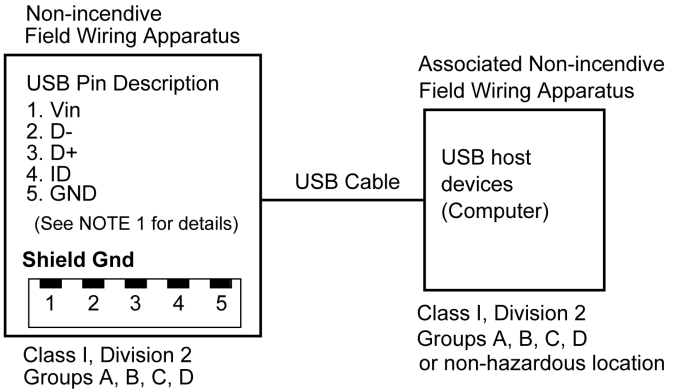

Circuit Parameters	Front USB (mini B)
Maximum input voltage = V_{max}	5.25 Vdc
Maximum load current = I_{max}	0.1 mA
Internal capacitance = C_i	0.24 µF
Internal inductance = L_i	16 µH

NOTE:

1. The above tables list the non-incendive circuit parameters.

The Entity Concept allows interconnection of non-incendive apparatus with associated apparatus – not specifically examined combinations – as a system when the approved values of V_{oc} (or U_o) and I_{sc} (or I_o) for the associated apparatus are less than or equal to Vmax (U_i) and Imax (I_i) for the non-incendive apparatus, and the approved values of C_a (C_o) and L_a (L_o) for the associated apparatus are greater than or equal to $C_i + C_{cable}$ and $L_i + L_{cable}$, respectively, for the non-incendive field wiring apparatus.

2. Associated non-incendive field wiring apparatus and non-incendive field wiring apparatus shall satisfy the following:

Associated Non-incendive Field Wiring Apparatus	-	Non-incendive Field Wiring Apparatus
V_{oc}	≤	V_{max}
I_{sc}	≤	I_{max}
C_a	≥	$C_i + C_{cable}$
L_a	≥	$L_i + L_{cable}$

3. If the electrical parameters of the cable are unknown, the following values may be used:

C_{cable} = 196.85 pF/m (60 pF/ft)

L_{cable} = 0.656 µH/m (0.20 µH/ft)

4. Wiring methods must be in accordance with the electrical code of the country where it is used.

This product must be installed in an enclosure. If installed in a Class I, Division 2 Location, the enclosure must be capable of accepting one or more Division 2 wiring methods.

⚠ DANGER

POTENTIAL FOR EXPLOSION

- Verify the power, input, and output (I/O) wiring are in accordance with Class I, Division 2 wiring methods.
- Substitution of any components may impair suitability for Class I, Division 2.
- Do not disconnect equipment while the circuit is live or unless the area is known to be free of ignitable concentrations.
- Remove power before attaching or detaching any connectors to or from this product.
- Ensure that power, communication, and accessory connections do not place excessive stress on the ports. Consider the vibration in the environment when making this determination.
- Securely attach power, communication, and external accessory cables to the panel or cabinet.
- Use only commercially available USB cables.
- Use only non-incendive USB configurations.
- Suitable for use in Class I, Division 2, Groups A, B, C, D Hazardous Locations.
- Confirm that the USB cable has been attached with the USB cable clamp before using the USB interface.

Failure to follow these instructions will result in death or serious injury.

Serial Interface (RS-485 [Isolation]) for COM1

Introduction

NOTE: For information on how to connect controllers and other types of equipment, refer to the corresponding device driver manual of your screen editing software.

⚠ CAUTION

LOSS OF COMMUNICATION

- All connections to the communication ports must not put excessive stress on the ports.
- Securely attach communication cables to the panel wall or cabinet.
- Use a RJ-45 connector that has a functional locking tab.

Failure to follow these instructions can result in injury or equipment damage.

NOTE: Use within the rated current.

RS-485 (Isolation)

RJ-45 connector

Product side	Pin No.	RS-485 (Isolation)		
		Signal Name	Direction	Meaning
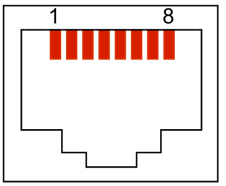	1	NC	–	No connection
	2	NC	–	No connection
	3	NC	–	No connection
	4	Line A	Input/Output	Transfer Data A (+)
	5	Line B	Input/Output	Transfer Data B (-)
	6	RS (RTS)	Output	Request to Send
	7	NC	–	No connection
	8	SG	–	Signal Ground
	Shell	FG	–	Functional Ground

NOTE: The FG and SG terminals are isolated.

Serial Interface (RS-232C and RS-422/RS-485) for COM2

Introduction

NOTE: For information on how to connect controllers and other types of equipment, refer to the corresponding device driver manual of your screen editing software.

You can switch the communication method between RS-232C and RS-422/RS-485 via the software.

The serial interface is not isolated. The SG (signal ground) and FG (functional ground) terminals are connected inside this product. When the serial interface connector is D-Sub, connect the FG wire to the shell.

⚠⚠ DANGER

ELECTRIC SHOCK AND FIRE

When using the SG terminal to connect an external device to this product:

- Verify that a short-circuit loop is not created when you set up the system.
- Connect the SG terminal to remote equipment when the external device is not isolated.
- Connect the SG terminal to a known reliable ground connection to reduce the risk of damaging the circuit.

Failure to follow these instructions will result in death or serious injury.

⚠ CAUTION

LOSS OF COMMUNICATION

- All connections to the communication ports must not put excessive stress on the ports.
- Securely attach communication cables to the panel wall or cabinet.

Failure to follow these instructions can result in injury or equipment damage.

NOTE: Use within the rated current.

RS-232C

D-Sub 9 pin plug connector

Product side	Pin No.	RS-232C		
		Signal Name	Direction	Meaning
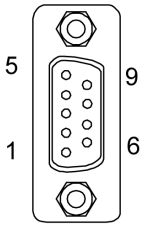	1	CD	Input	Carrier Detect
	2	RD (RXD)	Input	Receive Data
	3	SD (TXD)	Output	Send Data
	4	ER (DTR)	Output	Data Terminal Ready
	5	SG	–	Signal Ground
	6	DR (DSR)	Input	Data Set Ready
	7	RS (RTS)	Output	Request to Send
	8	CS (CTS)	Input	Send possible
	9	CI (RI)/VCC	Input/–	Called Status Display +5 Vdc ±5% Output 0.25 A*1
	Shell	FG	–	Functional Ground (Common with SG)

*1 You can switch pin #9 between CI (RI) and VCC via the software. The VCC output is not protected against overcurrent. To prevent damage or malfunction, use only within the rated current.

Interfit bracket is #4-40 (UNC).

RS-422/485

D-Sub 9 pin plug connector

Product side	Pin No.	RS-422/RS-485		
		Signal Name	Direction	Meaning
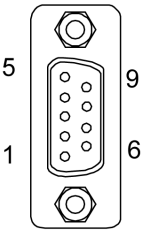	1	RDA	Input	Receive Data A (+)
	2	RDB	Input	Receive Data B (-)
	3	SDA	Output	Send Data A (+)
	4	ERA	Output	Data Terminal Ready A (+)
	5	SG	–	Signal Ground
	6	CSB	Input	Send Possible B (-)
	7	SDB	Output	Send Data B (-)
	8	CSA	Input	Send possible A (+)
	9	ERB	Output	Data Terminal Ready B (-)
	Shell	FG	–	Functional Ground (Common with SG)

Interfit bracket is #4-40 (UNC).

Auxiliary Output/Speaker Output Interface (AUX)

⚠ ⚠ DANGER

ELECTRIC SHOCK AND FIRE

When using the SG terminal to connect an external device to this product:

- Verify that a short-circuit loop is not created when you set up the system.
- Connect the SG terminal to remote equipment when the external device is not isolated.
- Connect the SG terminal to a known reliable ground connection to reduce the risk of damaging the circuit.

Failure to follow these instructions will result in death or serious injury.

Cable connection side	Pin No.	Signal Name	Direction	Meaning
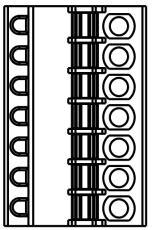	1	LineOut	Output	Line Out
	2	LineOut_GND	Output	Line Out Ground
	3	SP+	Output	Speaker +
	4	SP-	Output	Speaker -
	5	NC	–	No Connection
	6	ALARM+/ BUZZER+	Output	(Can be changed via software)
	7	ALARM-/ BUZZER-	Output	

AUX Connector: HMIZGAUX manufactured by Schneider Electric

Output Circuit

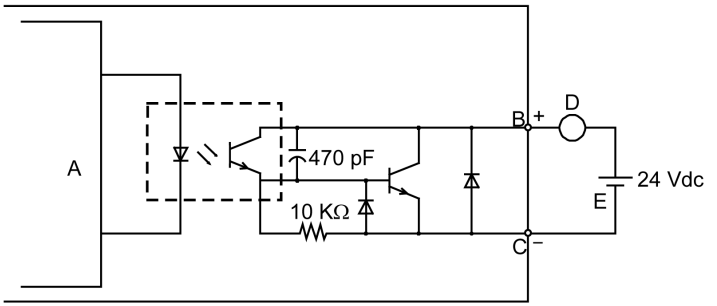

A Internal Circuit
B Pin Number 6: ALARM+/BUZZER+
C Pin Number 7: ALARM-/BUZZER-
D Load
E External Power

DVI-D Output Interface (only for Open Box)

⚠ ⚠ DANGER

ELECTRIC SHOCK AND FIRE

When using the SG terminal to connect an external device to this product:

- Verify that a short-circuit loop is not created when you set up the system.
- Connect the SG terminal to remote equipment when the external device is not isolated.
- Connect the SG terminal to a known reliable ground connection to reduce the risk of damaging the circuit.

Failure to follow these instructions will result in death or serious injury.

Product side	Pin No.	Signal Name	Direction
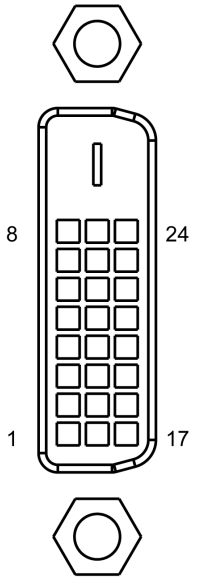	1	TMDS DATA 2-	Output
	2	TMDS DATA 2+	Output
	3	TMDS DATA 2 SHIELD	–
	4	NC	–
	5	NC	–
	6	DDC Clock	Output
	7	DDC Data	Input/Output
	8	NC	–
	9	TMDS DATA 1-	Output
	10	TMDS DATA 1+	Output
	11	TMDS DATA 1 SHIELD	–
	12	NC	–
	13	NC	–
	14	+5 Vdc Power	–
	15	GND	Ground
	16	HMIG5U: NC HMIG5U2: Hot Plug Detect	HMIG5U: - HMIG5U2: Input
	17	TMDS DATA 0-	Output
	18	TMDS DATA 0+	Output
	19	TMDS DATA 0 SHIELD	–
	20	NC	–
	21	NC	–
	22	TMDS CLOCK SHIELD	–
	23	TMDS CLOCK+	Output
	24	TMDS CLOCK-	Output
	Shell	FG	Functional Ground

Recommendations:

DVI Cable manufactured by Schneider Electric (HMIYCABDVI1011 <10 m>)

NOTE:

- For noise-free operation, use the recommended DVI-D cable.
- The following notes are only for HMIG5U:
  - DVI-D output supports display resolutions up to XGA (1,024 x 768). When the screen output mode is set to clone mode, the maximum display resolution of the display module is the same as the display resolution of DVI-D output, which is XGA (1,024 x 768).
  - DVI-D output does not support Hot Plug Detect (HPD). Even when the main unit power is on while connected to an external display, this product outputs the display signal as XGA. If the external display does not support XGA Input, the screen will not display.

Chapter 5
Dimensions

What Is in This Chapter?

This chapter contains the following sections:

Section	Topic	Page
5.1	Premium Box	96
5.2	Open Box	97
5.3	Smart Display	98
5.4	Advanced Display	102
5.5	Box and Display Modules - Combined Dimensions	106

Section 5.1
Premium Box

HMIG3U

External Dimensions

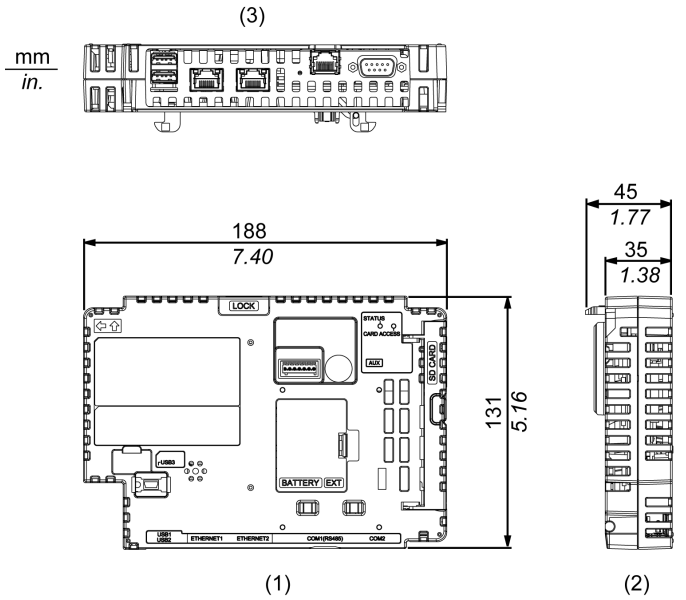

1 Front
2 Left
3 Bottom

Section 5.2
Open Box

HMIG5U/HMIG5U2

External Dimensions

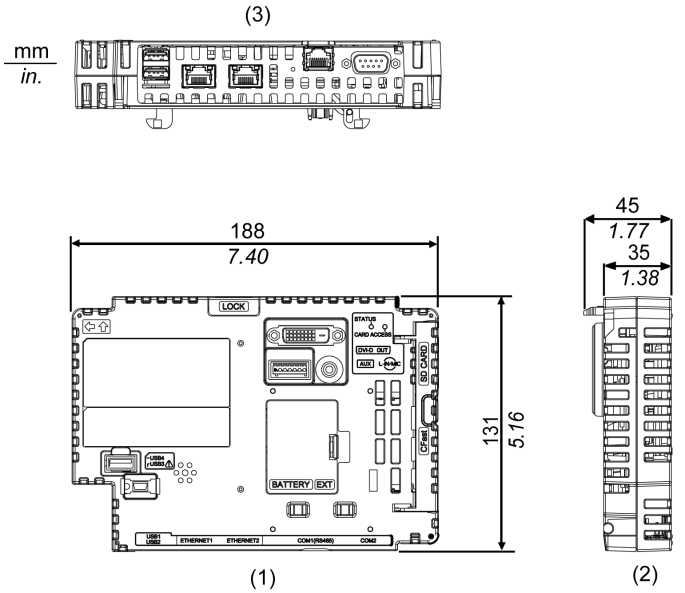

1 Front
2 Left
3 Bottom

Section 5.3
Smart Display

What Is in This Section?

This section contains the following topics:

Topic	Page
HMIDT542	99
HMIDT642/HMIDT643	100
HMIDT732	101

HMIDT542

External Dimensions

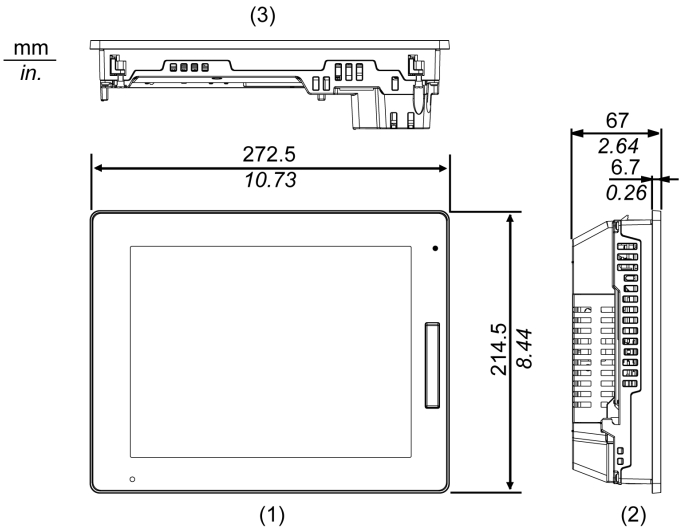

1 Front
2 Left
3 Bottom

HMIDT642/HMIDT643

External Dimensions

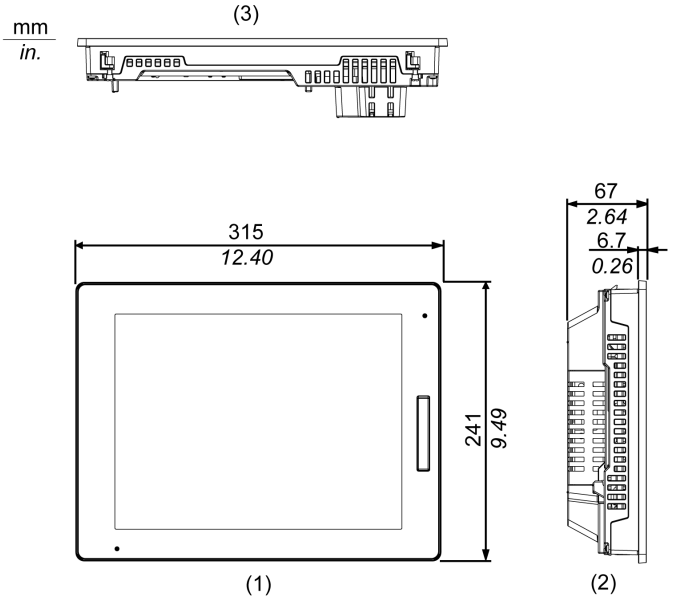

1 Front
2 Left
3 Bottom

HMIDT732

External Dimensions

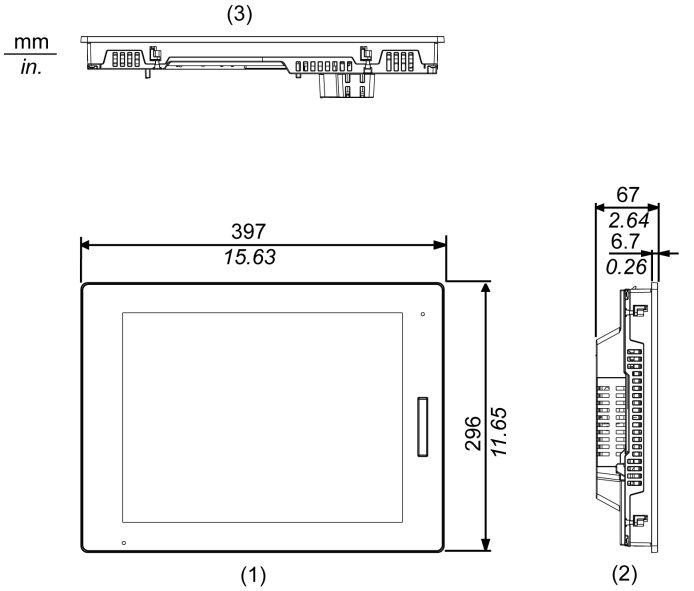

1 Front
2 Left
3 Bottom

Section 5.4
Advanced Display

What Is in This Section?

This section contains the following topics:

Topic	Page
HMIDT351	103
HMIDT551	104
HMIDT651	105

HMIDT351

External Dimensions

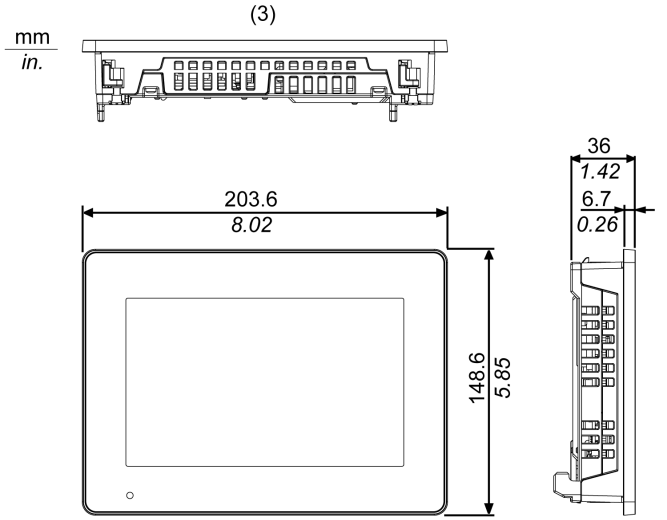

1 Front
2 Left
3 Bottom

HMIDT551

External Dimensions

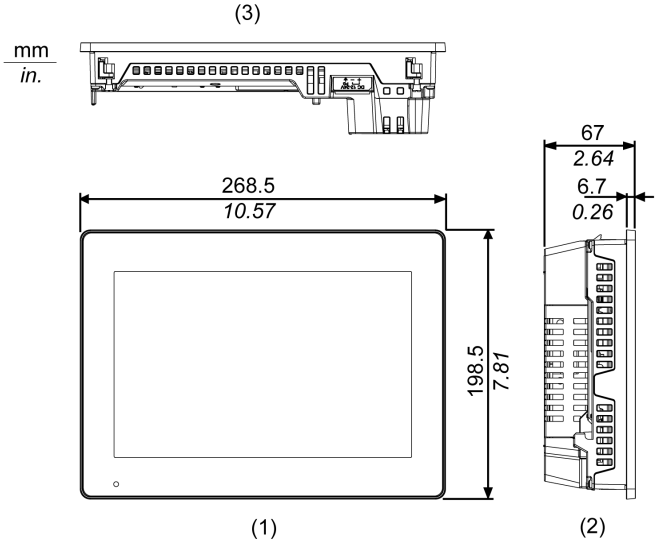

1 Front
2 Left
3 Bottom

HMIDT651

External Dimensions

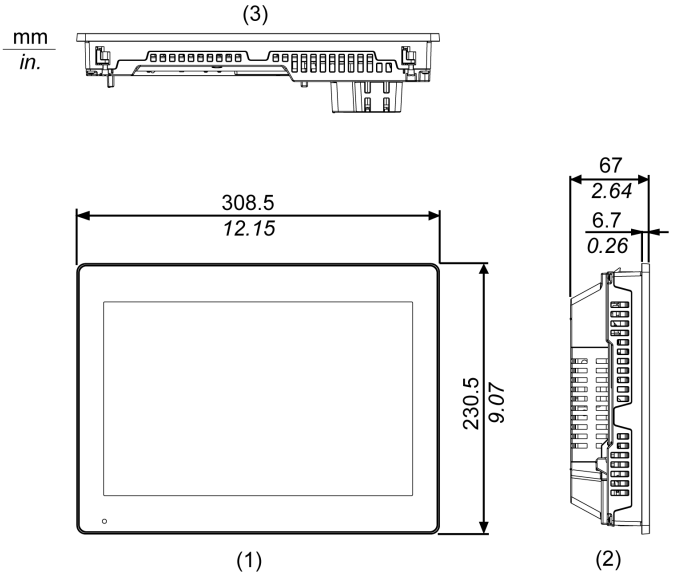

1 Front
2 Left
3 Bottom

Section 5.5
Box and Display Modules - Combined Dimensions

What Is in This Section?

This section contains the following topics:

Topic	Page
HMIDT542 with Box Module	107
HMIDT642/HMIDT643 with Box Module	109
HMIDT732 with Box Module	111
HMIDT351 with Box Module	113
HMIDT551 with Box Module	115
HMIDT651 with Box Module	117

HMIDT542 with Box Module

External Dimensions

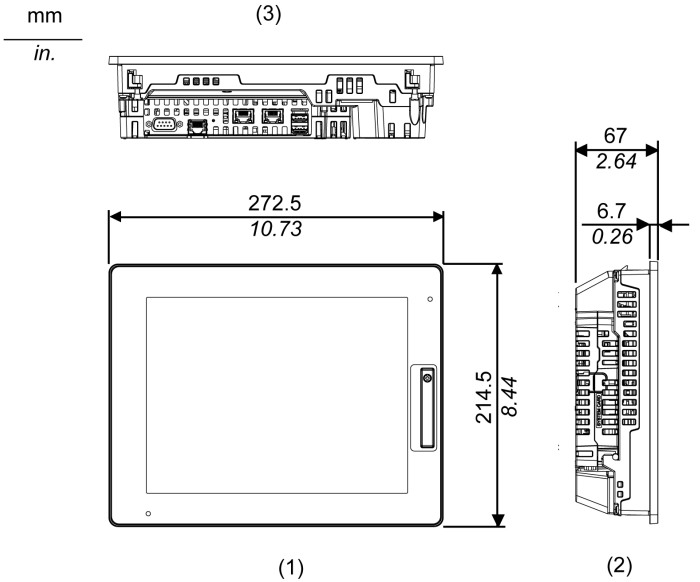

1 Front
2 Left
3 Bottom

Dimensions with Cables

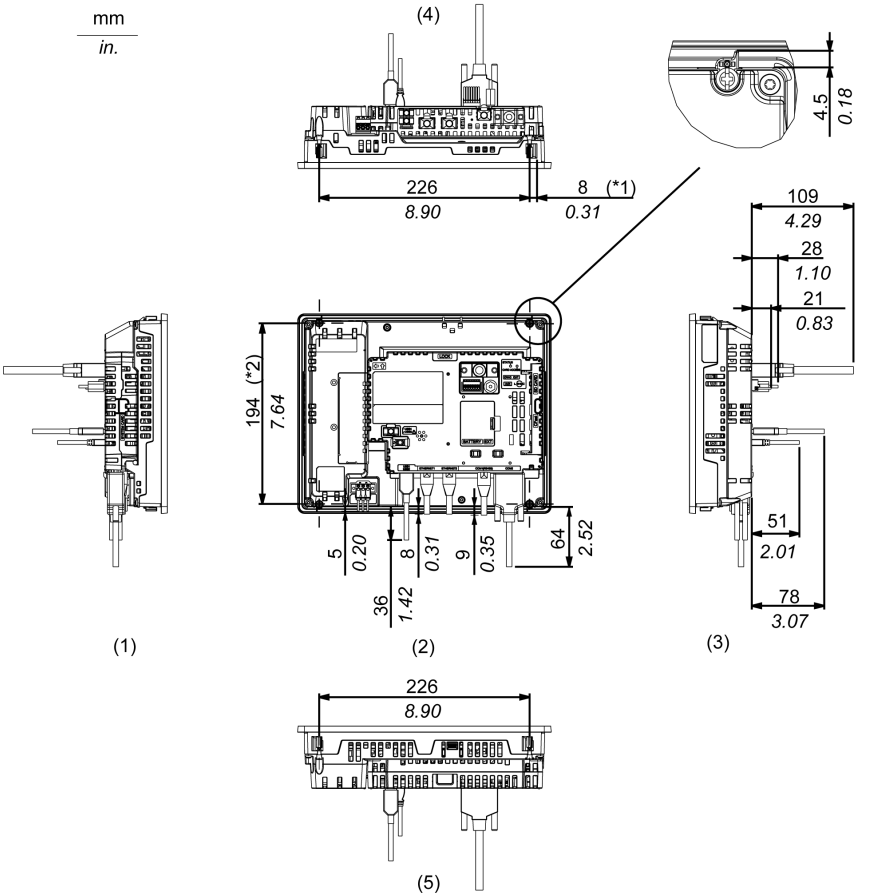

***1** Rotation area of the fastener
***2** Pitch of the center of installation fastener screws

1 Right
2 Front
3 Left
4 Bottom
5 Top

NOTE: All the above values are designed with cable bending in mind. The dimensions given here are representative values depending on the type of connection cable in use. Therefore, these values are intended for reference only.

HMIDT642/HMIDT643 with Box Module

External Dimensions

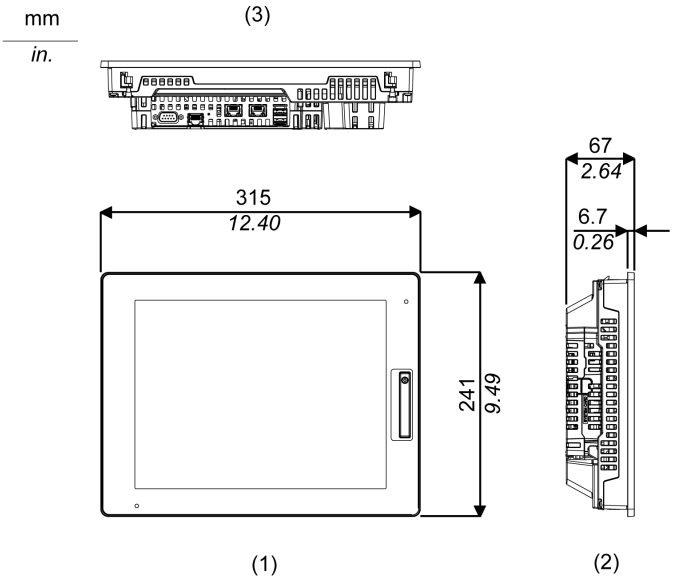

1 Front
2 Left
3 Bottom

Dimensions with Cables

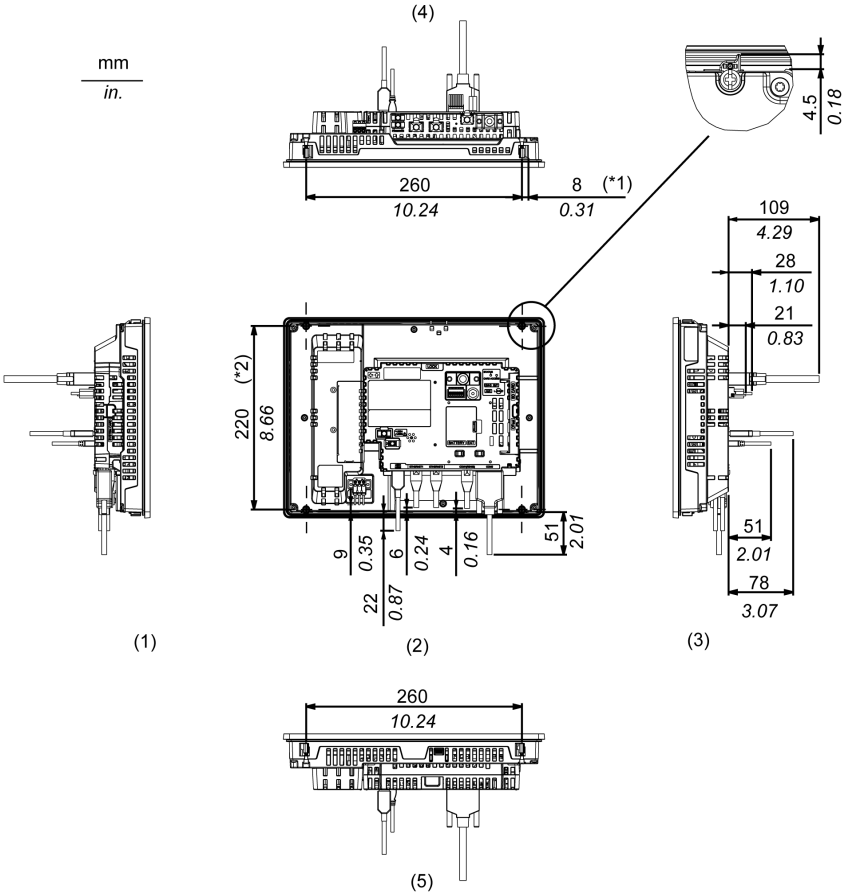

***1** Rotation area of the fastener
***2** Pitch of the center of installation fastener screws

1 Right
2 Front
3 Left
4 Bottom
5 Top

NOTE: All the above values are designed with cable bending in mind. The dimensions given here are representative values depending on the type of connection cable in use. Therefore, these values are intended for reference only.

HMIDT732 with Box Module

External Dimensions

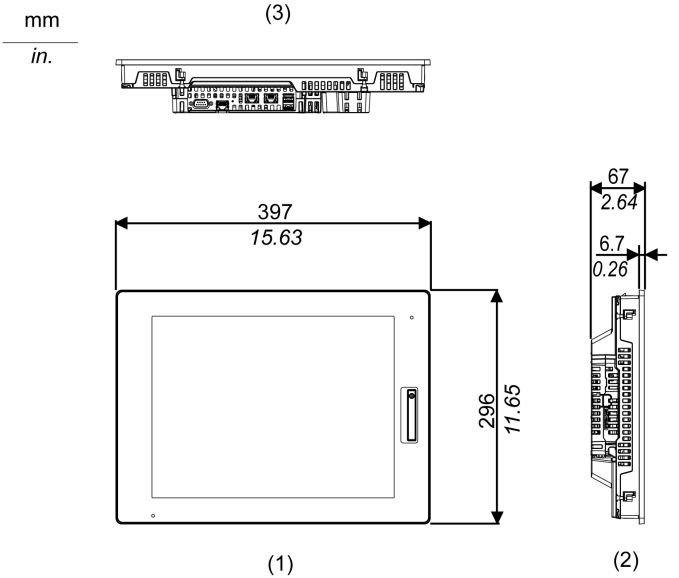

1 Front
2 Left
3 Bottom

Dimensions with Cables

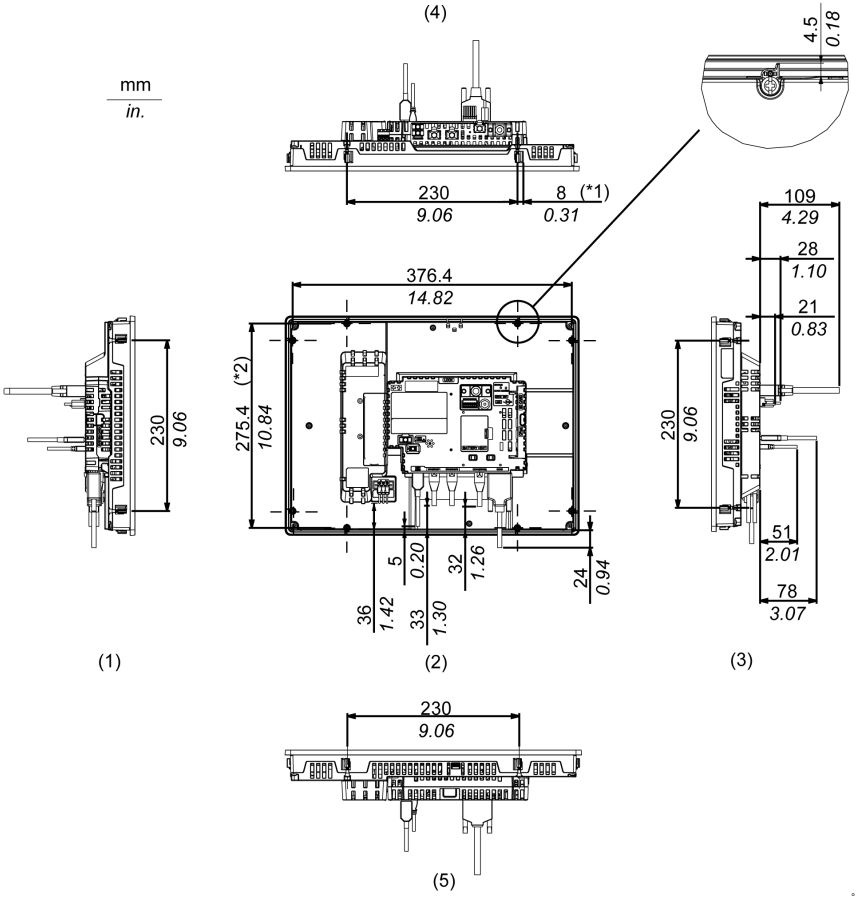

***1** Rotation area of the fastener
***2** Pitch of the center of installation fastner screws

1 Right
2 Front
3 Left
4 Bottom
5 Top

NOTE:

- All the above values are designed with cable bending in mind. The dimensions given here are representative values depending on the type of connection cable in use. Therefore, these values are intended for reference only.

HMIDT351 with Box Module

External Dimensions

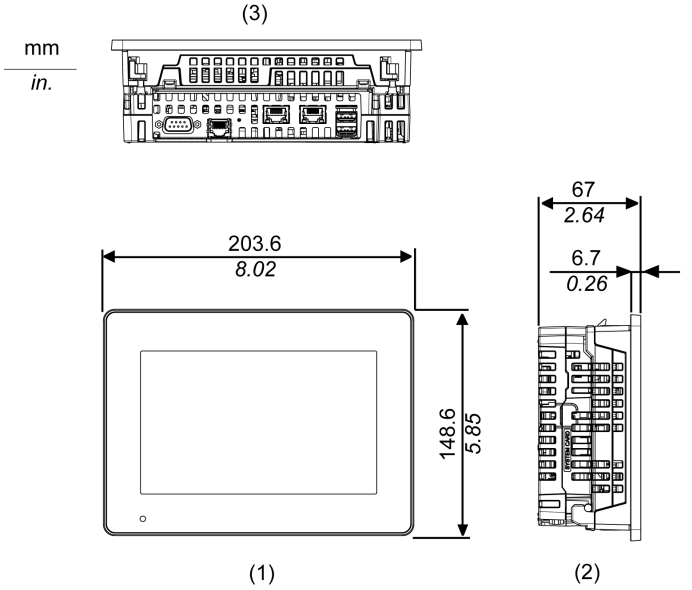

1 Front
2 Left
3 Bottom

Dimensions with Cables

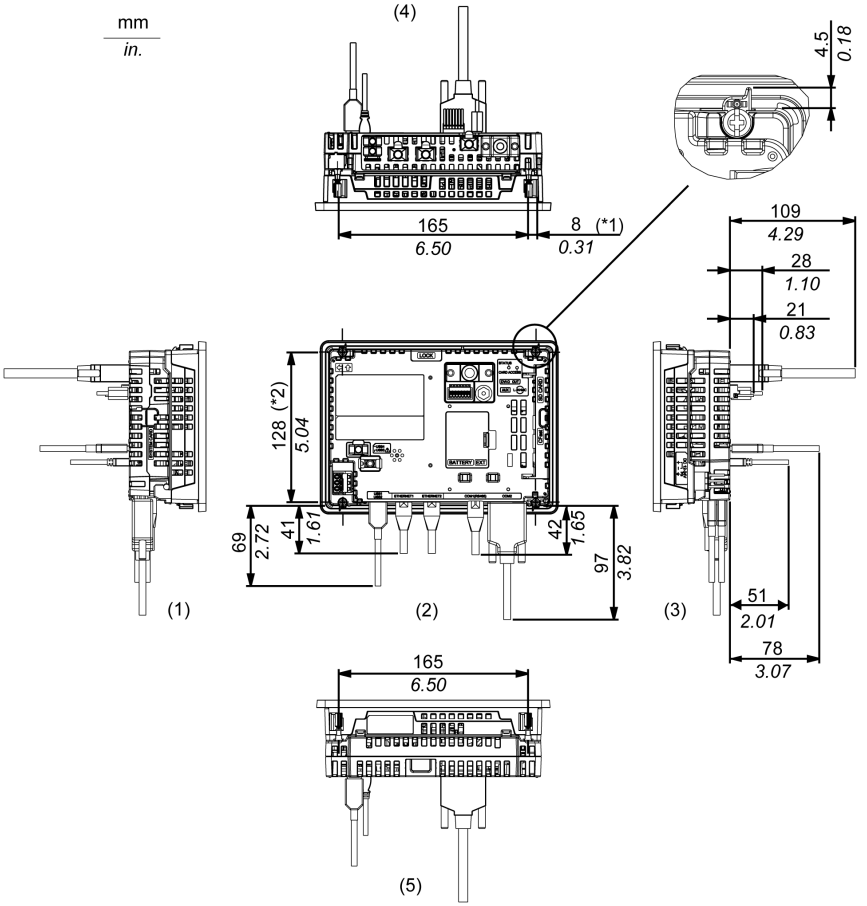

***1** Rotation area of the fastener
***2** Pitch of the center of installation fastener screws

1 Right
2 Front
3 Left
4 Bottom
5 Top

NOTE:

- All the above values are designed with cable bending in mind. The dimensions given here are representative values depending on the type of connection cable in use. Therefore, these values are intended for reference only.

HMIDT551 with Box Module

External Dimensions

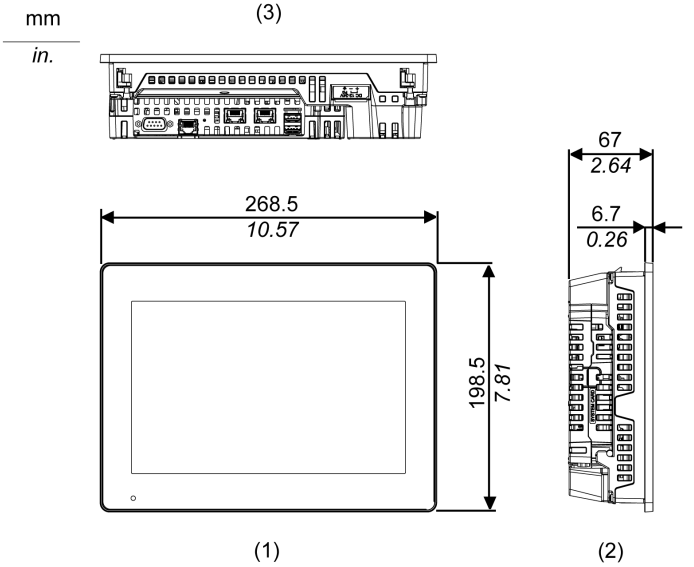

1 Front
2 Left
3 Bottom

Dimensions with Cables

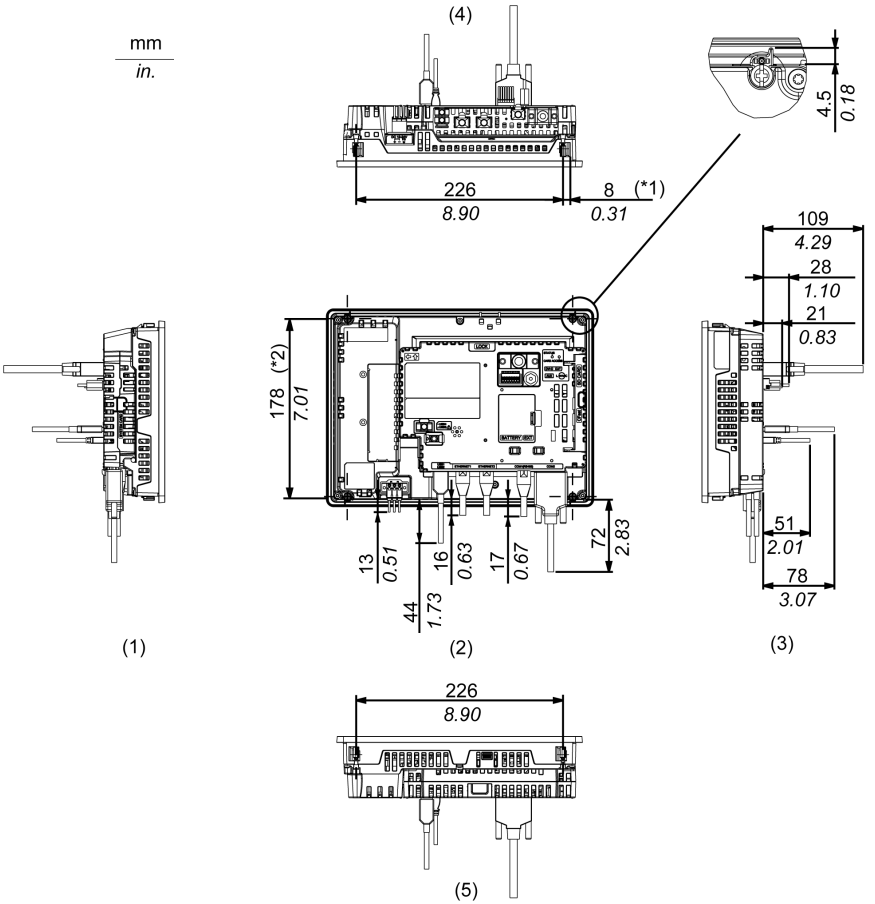

***1** Rotation area of the fastener
***2** Pitch of the center of installation fastener screws

1 Right
2 Front
3 Left
4 Bottom
5 Top

NOTE:

- All the above values are designed with cable bending in mind. The dimensions given here are representative values depending on the type of connection cable in use. Therefore, these values are intended for reference only.

HMIDT651 with Box Module

External Dimensions

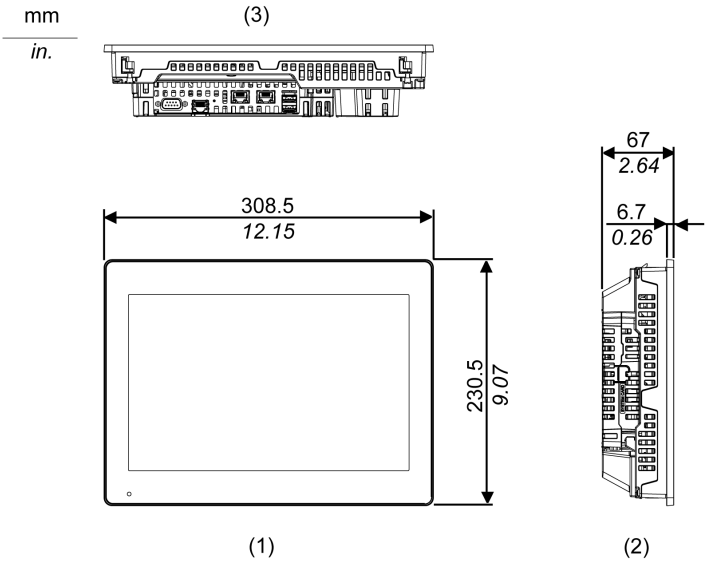

1 Front
2 Left
3 Bottom

Dimensions with Cables

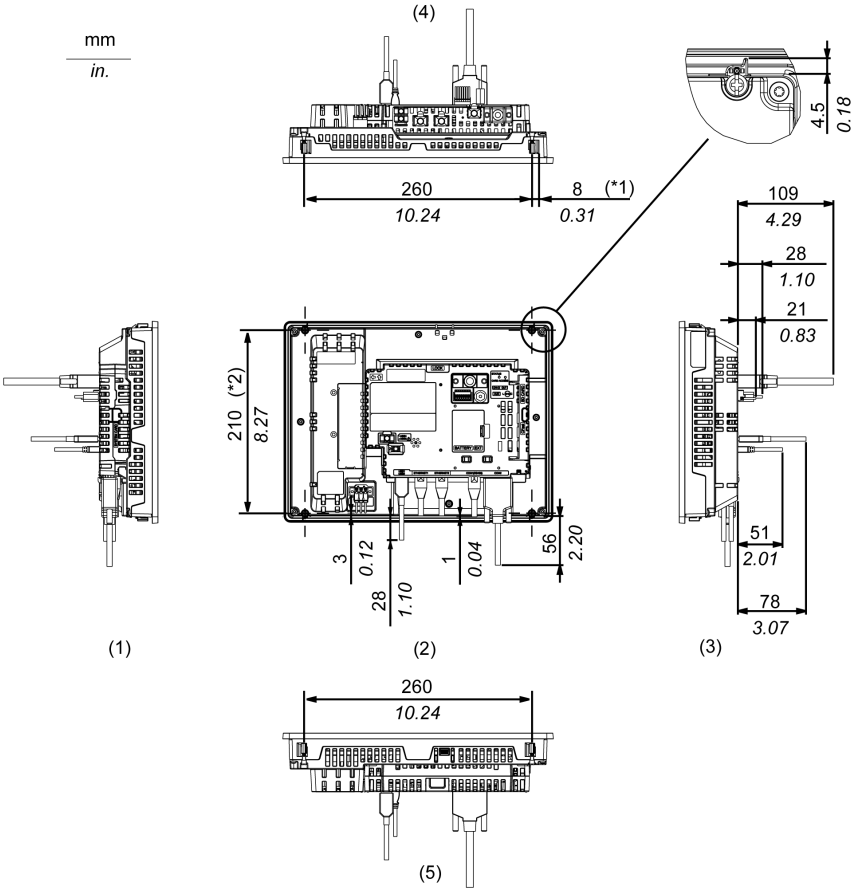

***1** Rotation area of the fastener
***2** Pitch of the enter of installation fastener screws

1 Right
2 Front
3 Left
4 Bottom
5 Top

NOTE:

- All the above values are designed with cable bending in mind. The dimensions given here are representative values depending on the type of connection cable in use. Therefore, these values are intended for reference only.

Chapter 6
Installation and Wiring

What Is in This Chapter?

This chapter contains the following sections:

Section	Topic	Page
6.1	Installation	120
6.2	Wiring Principles	135
6.3	USB Cable Clamp	144
6.4	AUX Connector	147
6.5	SD Card Insertion/Removal	149
6.6	CFast Card Insertion/Removal	156
6.7	Front USB Cover	163
6.8	Isolation Unit	165

Section 6.1
Installation

Installation Procedures

Introduction

This product is designed for use on flat surfaces of Type 1, Type 4X (Indoor Use Only) or Type 13 Enclosure.

Mount this product in an enclosure that provides a clean, dry, robust and controlled environment (IP66F*1, IP67F*1, Type 1, Type 4X [Indoor Use Only], or Type 13 Enclosure).

For Advanced Display, the front surface is IP66F*1, IP67F*1, Type 1, Type 4X (Indoor Use Only) or Type 13 Enclosure.

For Smart Display, the front surface is IP66F*1, IP67F*1, Type 1, Type 4X (Indoor Use Only) or Type 13 Enclosure.

Display Front Surface		Enclosure Front Surface
Smart Display	Advanced Display	
IP66F, IP67F, Type 1, Type 4X (Indoor Use Only), Type 13	IP66F, IP67F, Type 1, Type 4X (Indoor Use Only), Type 13	IP66F, IP67F, Type 1, Type 4X (Indoor Use Only), Type 13

When the front USB cover*2 is open, the front surface is Type 1 Enclosure.

Be aware of the following when building this product into an end-use product:
- The rear face of this product is not approved as an enclosure. When building this product into an end-use product, be sure to use an enclosure that satisfies standards as the end-use product's overall enclosure.
- Install this product in an enclosure with mechanical rigidity.
- This product is not designed for outdoor use. UL certification obtained is for indoor use only.
- Install and operate this product with its front panel facing outward.

*1 IP66F and IP67F are not part of the UL certification.

*2 The necessary torque is 0.5 N•m (4.4 lb-in).

Installation Requirements

⚠ CAUTION
RISK OF BURNING INJURY Do not touch the rear chassis during operation. **Failure to follow these instructions can result in injury or equipment damage.**

Check that the installation wall or cabinet surface is flat, in good condition and has no jagged edges. Metal reinforcing strips may be attached to the inside of the wall, near the panel-cut, to increase its rigidity.
Decide on the thickness of the enclosure wall, based on the level of strength required: 1.6...5 mm (0.06...0.2 in). Even if the installation wall thickness is within the recommended range for the “Panel Cut Dimensions”, depending on wall’s material, size, and installation location of this product and other devices, the installation wall could warp. To prevent warping, the installation surface may need to be strengthened.
Be sure that the ambient air temperature and the ambient humidity are within their designated ranges. Ambient air temperature: 0 to 60 °C (32 to 140 °F) (see the Environment Specifications for this product); ambient humidity: 10 to 90% RH; wet bulb temperature: maximum 39 °C (102 °F). When installing this product in a cabinet or enclosure, the ambient air temperature is the cabinet’s or enclosure’s internal temperature. 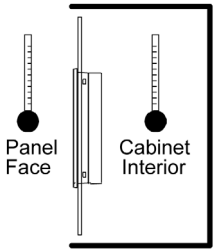
Be sure that heat from surrounding equipment does not cause this product to exceed its standard operating temperature.

When mounting this product vertically, ensure that the right side of this product faces up. In other words, the DC power connector should be at the top.

NOTE: For vertical mounting, make sure your screen editing software supports the function.

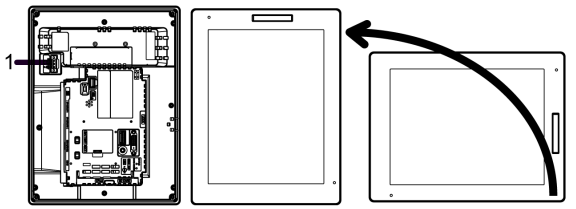

1 Power connector

When installing this product in a slanted position, the product face should not incline more than 30°.

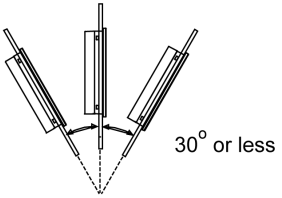

When installing this product in a slanted position with an incline more than 30°, the ambient temperature must not exceed 40 °C (104 °F). You may need to use forced air cooling (fan, A/C) to ensure the ambient operating temperature is 40 °C or less (104 °F or less).

For easier maintenance, operation and improved ventilation, install this product at least 100 mm (3.94 in) away from adjacent structures and other equipment as shown in the following illustration:

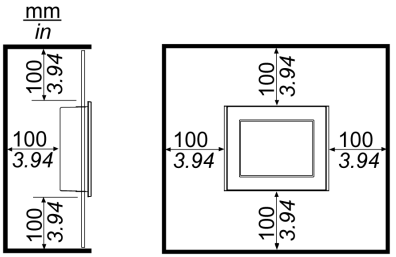

Please ensure you have enough space to insert and remove the storage card.

For Wireless LAN models, do not block the wireless LAN antenna area with your hand, body or other objects. It may cause interference in wireless LAN communications.

Wireless LAN Models

⚠ WARNING

ELECTROMAGNETIC/RADIO INTERFERENCE

If you are uncertain of the policy that applies to the use of the Wireless LAN model, ask the administrator about its use before you turn it on.

Failure to follow these instructions can result in death, serious injury, or equipment damage.

2.4 GHz Wireless Devices

The Wireless LAN model uses the 2.4 GHz frequency range, which is used by a wide range of wireless equipment. Example usage includes industrial, scientific, and medical equipment such as microwave ovens, on-site wireless stations (requiring licenses), low-power wireless stations (not requiring licenses) as well as amateur wireless stations (requiring licenses).

1 Before use, confirm that no on-site wireless stations and specified low-power wireless stations or amateur wireless stations operate in your vicinity.
2 In the event that the Wireless LAN model causes harmful interference to any other "on-site wireless stations", immediately change the channel frequency of the Wireless LAN model, or change its location, or halt operation of radio emissions and contact the administrator of the wireless network to resolve the issue.

Security on Your Wireless LAN

Because wireless LANs do not normally provide adequate data security, the following problems may occur.

1. Unlawful access of communication information.
   - There is a chance that information found in emails, and personal information such as user IDs, passwords, and credit card numbers, may be intentionally intercepted by a malicious third party.
2. Illegal Access
   A malicious third party may be able to access personal or company data over the company's local area network without permission, to:
   - Obtain personal and confidential information (information leak)
   - Impersonate someone by communicating as that person and disseminating invalid information (spoofing)
   - Alter intercepted communications and re-transmitting tolerated content (falsification)
   - Cause critical damage to data and or systems due to a computer virus (damage).

This wireless LAN product includes security features that enable you to configure security-related settings that reduce the likelihood of the above-mentioned problems.

We recommend that you make yourself fully acquainted with the possible implications of what might happen if you use a wireless product without enabling security features, and that you configure security-related settings and use wireless products at your own responsibility.

Panel Cut Dimensions

Based on the panel cut dimensions, open a mount hole on the panel.

mm [in]

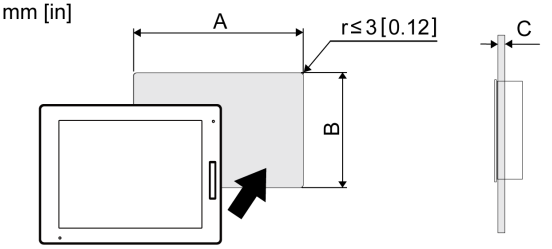

Model Name	A	B	C
HMIDT542	259 mm (+1/-0 mm) (10.2 in [+0.04/-0 in])	201 mm (+1/-0 mm) (7.91 in [+0.04/-0 in])	1.6...5 mm (0.06...0.2 in)
HMIDT642 HMIDT643	301.5 mm (+1/-0 mm) (11.87 in [+0.04/-0 in])	227.5 mm (+1/-0 mm) (8.96 in [+0.04/-0 in])	
HMIDT732	383.5 mm (+1/-0 mm) (15.1 in [+0.04/-0 in])	282.5 mm (+1/-0 mm) (11.12 in [+0.04/-0 in])	
HMIDT351	190 mm (+1/-0 mm) (7.48 in [+0.04/-0 in])	135 mm (+1/-0 mm) (5.31 in [+0.04/-0 in])	
HMIDT551	255 mm (+1/-0 mm) (10.04 in [+0.04/-0 in])	185 mm (+1/-0 mm) (7.28 in [+0.04/-0 in])	
HMIDT651	295 mm (+1/-0 mm) (11.61 in [+0.04/-0 in])	217 mm (+1/-0 mm) (8.54 in [+0.04/-0 in])	

Installing onto Display Module or DC Power Supply Adapter for Box Module

⚠⚠ DANGER

HAZARD OF ELECTRIC SHOCK, EXPLOSION, OR ARC FLASH

- Remove all power from the device before removing any covers or elements of the system, and prior to installing or removing any accessories, hardware, or cables.
- Unplug the power cable from both the Display Module or DC Power Supply Adapter for Box Module and the power supply.
- Always use a properly rated voltage sensing device to confirm power is off.
- Replace and secure all covers or elements of the system before applying power to the Display Module or DC Power Supply Adapter for Box Module.

Failure to follow these instructions will result in death or serious injury.

NOTICE

EQUIPMENT DAMAGE

- When mounting this product vertically, before attaching to the panel, install the Box Module onto the Display Module or DC Power Supply Adapter for Box Module.
- When installing the Box Module onto the Display Module or DC Power Supply Adapter for Box Module, place the Display Module or DC Power Supply Adapter for Box Module on a clean and level surface with the screen facing downward.
- Only qualified personnel can change the primary battery.

Failure to follow these instructions can result in equipment damage.

Step	Action
1	Pull the LOCK forward on the top of the Box Module to release the lock as illustrated. 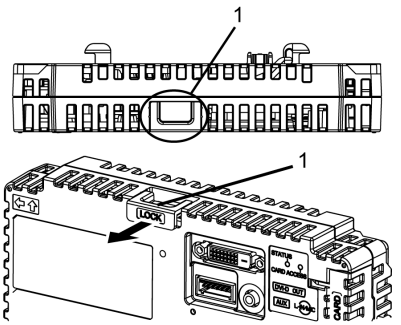 **1** LOCK

Step	Action
2	Insert the protruding points on the bottom left and right of the Box Module into the two holes on the back of the Display Module or DC Power Supply Adapter for Box Module to attach the Box Module. 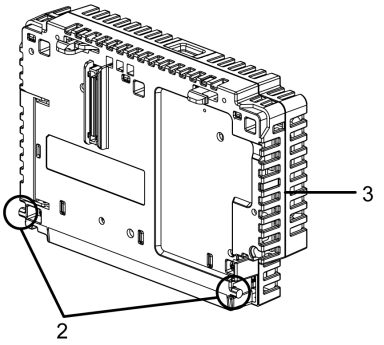 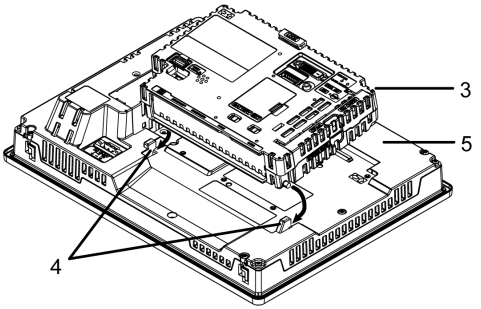 **2** Protruding points **3** Box Module **4** Holes for insertion **5** Display Module or DC Power Supply Adapter for Box Module
3	Fully push on the LOCK on the top of the Box Module to mount the Box Module on the Display Module or DC Power Supply Adapter for Box Module. 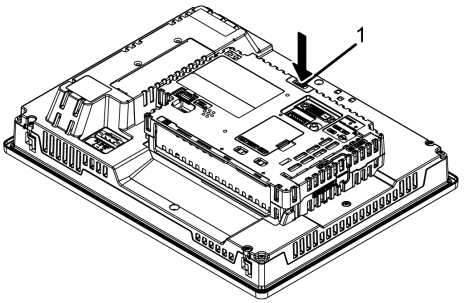 **1** LOCK

NOTE: For instructions on how to mount the Display Module to the panel, refer to Installing to the Panel *(see page 129)*. Refer to the DC Power Supply Adapter for Box Module Quick Reference Guide on how to mount the DC Power Supply Adapter for Box Module to the panel.

Removing from Display Module or DC Power Supplly Adapter for Box Module

⚠⚠ DANGER

HAZARD OF ELECTRIC SHOCK, EXPLOSION, OR ARC FLASH

- Remove all power from the device before removing any covers or elements of the system, and prior to installing or removing any accessories, hardware, or cables.
- Unplug the power cable from both the Display Module or DC Power Supply Adapter for Box Module and the power supply.
- Always use a properly rated voltage sensing device to confirm power is off.
- Replace and secure all covers or elements of the system before applying power to the Display Module or DC Power Supply Adapter for Box Module.

Failure to follow these instructions will result in death or serious injury.

NOTICE

EQUIPMENT DAMAGE

When this product is mounted vertically, first remove the Display Module or DC Power Supply Adapter for Box Module from the panel, then remove the Box Module from the Display Module or DC Power Supply Adapter for Box Module.

Failure to follow these instructions can result in equipment damage.

Step	Action
1	When mounting this product vertically, remove the Display Module or DC Power Supply Adapter for Box Module from the panel and place the Display Module or DC Power Supply Adapter for Box Module on a clean and level surface with the screen facing down *(see page 132)*. **NOTE:** Refer to the DC Power Supply Adapter for Box Module Quick Reference Guide on how to remove the DC Power Supply Adapter for Box Module from the panel.

Step	Action
2	Release the LOCK on the top of the Box Module as illustrated. 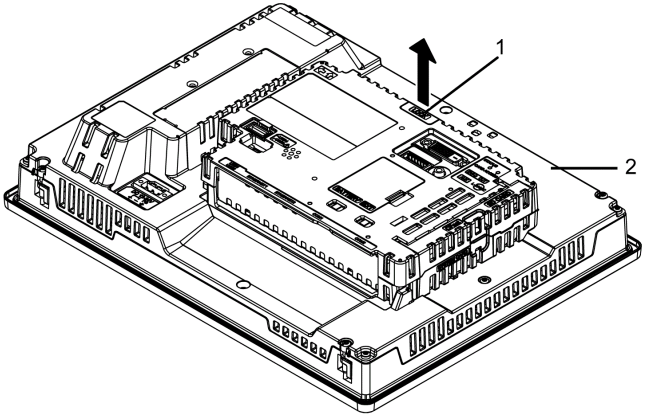 **1** LOCK **2** Display Module or DC Power Supply Adapter for Box Module
3	Lift the Box Module in the direction indicated by arrow (A) in the diagram and remove it by sliding in the direction indicated by arrow (B). 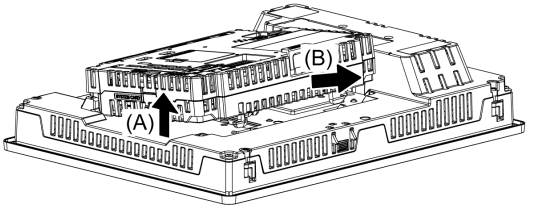

⚠ CAUTION

RISK OF INJURY

Do not drop the Box Module when you remove it from the Display Module or DC Power Supply Adapter for Box Module.

- Hold the unit in place after removing the fasteners.
- Use both hands.

Failure to follow these instructions can result in injury or equipment damage.

Installing to the Panel

⚠⚠ DANGER

HAZARD OF ELECTRIC SHOCK, EXPLOSION, OR ARC FLASH

- Remove all power from the device before removing any covers or elements of the system, and prior to installing or removing any accessories, hardware, or cables.
- Unplug the power cable from both the Display Module and the power supply.
- Always use a properly rated voltage sensing device to confirm power is off.
- Replace and secure all covers or elements of the system before applying power to the Display Module.

Failure to follow these instructions will result in death or serious injury.

NOTICE

EQUIPMENT DAMAGE

- When mounting this product vertically, first install the Box Module onto the Display Module before attaching the Display Module to the panel.
- Keep this product stabilized in the panel-cut while you are installing or removing the screw fasteners.

Failure to follow these instructions can result in equipment damage.

Step	Action
1	When mounting this product vertically, place the Display Module on a clean and level surface with the screen facing down and mount the Box Module to the Display Module *(see page 125)*.
2	Check that the Display Module's gasket is seated securely into the bezel's groove, which runs around the perimeter of the display panel frame. **NOTE:** Always use the installation gasket, since it absorbs vibration in addition to repelling water. For the procedure on replacing the installation gasket, refer to Replacing the Installation Gasket *(see page 172)*.
3	Based on the Display Module's panel cut dimensions *(see page 124)*, open a mount-hole on the panel and attach the Display Module to the panel from the front side. 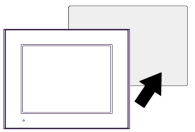

Step	Action
4	Confirm that the anti-drop lock on the top of the Display Module is attached to the panel. Except for HMIDT351 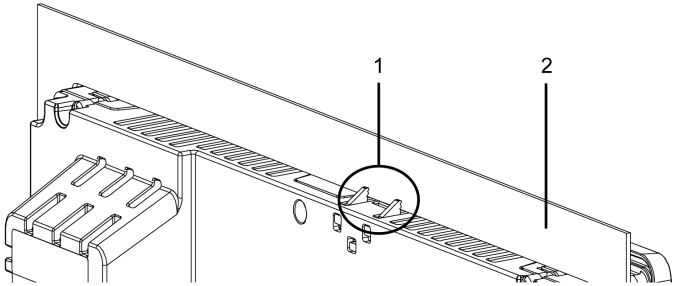 HMIDT351 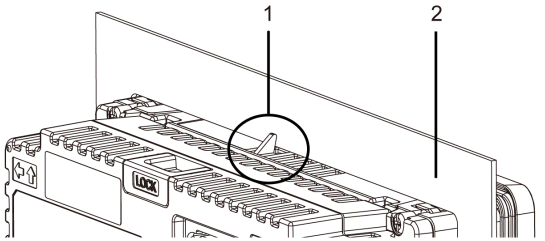 **1** Anti-drop lock **2** Panel

Step	Action
5	Using a Phillips screwdriver, gradually tighten (turn clockwise) the screws for the fasteners (top, bottom, left, and right), alternating diagonally between screws until all are secure. Be sure that the L-shaped part of the installation fastener (2 in figure below) is completely vertical. The necessary torque is 0.5 N•m (4.4 lb-in). **NOTE:** ● If the Display Module is not mounted properly, it may fall. ● If the panel is thick (approx. 5 mm [0.2 in]), you may have trouble straightening the L-shaped part of the installation fastener. If this happens, push the display module from the front as you tighten the screws. 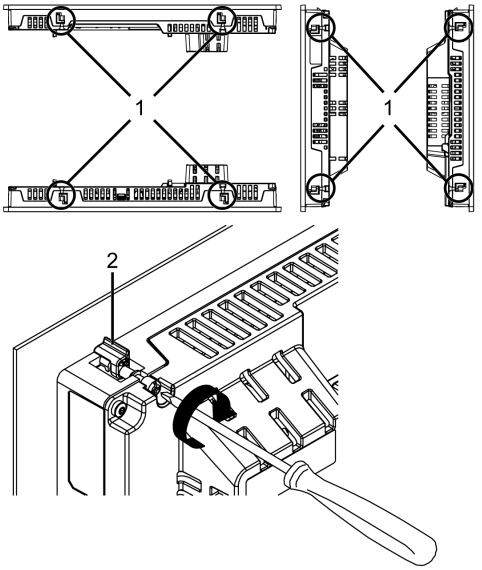 **1** Installation fastener **2** L-shaped part of the installation fastener **Number of Installation Fasteners** 15-inch models: ● Top - 2, Bottom - 2, Right - 2, Left - 2 Models less than 12-inch: ● Top - 2, Bottom - 2, Right - None, Left - None

NOTICE

BROKEN ENCLOSURE

Do not exert more than 0.5 N•m (4.4 lb-in) of torque when tightening the fastener's screws.

Failure to follow these instructions can result in equipment damage.

Removing from the Panel

⚠ ⚠ DANGER

HAZARD OF ELECTRIC SHOCK, EXPLOSION, OR ARC FLASH

- Remove all power from the device before removing any covers or elements of the system, and prior to installing or removing any accessories, hardware, or cables.
- Unplug the power cable from both the Display Module and the power supply.
- Always use a properly rated voltage sensing device to confirm power is off.
- Replace and secure all covers or elements of the system before applying power to the Display Module.

Failure to follow these instructions will result in death or serious injury.

NOTICE

EQUIPMENT DAMAGE

- When this product is mounted vertically, from the panel first remove the Display Module or DC Power Supply Adapter for Box Module, then remove the Box Module from the Display Module.
- Keep this product stabilized in the panel-cut while you are installing or removing the screw fasteners.

Failure to follow these instructions can result in equipment damage.

Step	Action
1	Using a Phillips screwdriver, gradually loosen (turn counterclockwise) the screws for the fasteners (top, bottom, left, and right), alternating diagonally between screws until all screws are loose. 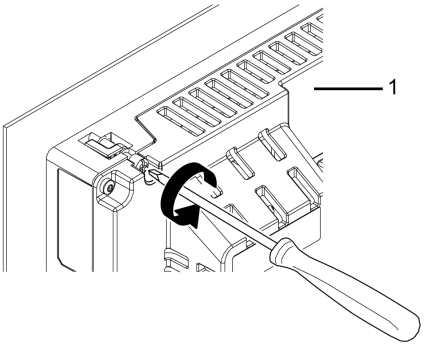 **1** Rear side **NOTE:** ● For the number of installation fasteners on your model, see Number of Installation Fasteners in Step 5 of Installing to the Panel *(see page 129)*. ● If the panel is thick (approx. 5 mm [0.2 in]), you may have trouble straightening the L-shaped part of the installation fastener. If this happens, push the display module from the front as you loosen the screws.
2	While pushing on the anti-drop lock on the top of the Display Module with a tool such as a screwdriver, slowly remove the Display Module from the panel. 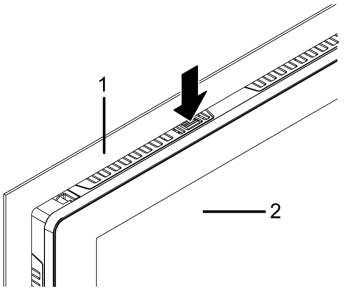 **1** Panel **2** Front side

⚠ CAUTION

RISK OF INJURY

Do not drop this product when you remove it from the panel.

- Hold this product in place after removing the fasteners.
- Use both hands.
- While pushing on the anti-drop lock, be careful not to hurt your fingers.

Failure to follow these instructions can result in injury or equipment damage.

NOTICE

EQUIPMENT DAMAGE

To avoid damage, remove this product while pushing the anti-drop lock or by making sure the lock does not touch the panel.

Failure to follow these instructions can result in equipment damage.

Section 6.2
Wiring Principles

What Is in This Section?

This section contains the following topics:

Topic	Page
Connecting the DC Power Cord	136
Connecting the Power Supply	139
Grounding	142

Connecting the DC Power Cord

⚠ ⚠ DANGER

HAZARD OF ELECTRIC SHOCK, EXPLOSION, OR ARC FLASH

- Remove all power from the device before removing any covers or elements of the system, and prior to installing or removing any accessories, hardware, or cables.
- Remove power before wiring this product's power terminals.
- Always use a properly rated voltage sensing device to confirm power is off.
- Replace and secure all covers or elements of the system before applying power to this product.
- Use only the specified voltage when operating this product. This product is designed to use 12 to 24 Vdc power. Always check whether your device is DC powered before applying power.
- Since this product is not equipped with a power switch, be sure to connect a power switch to the power supply.
- Be sure to ground this product's FG terminal.

Failure to follow these instructions will result in death or serious injury.

NOTE:

- The SG (signal ground) and FG (functional ground) terminals are connected internally in this product.
- When the FG terminal is connected, be sure the wire is grounded. Not grounding this product can result in excessive electromagentic interference (EMI).

DC Power Cord Preparation

- Make sure the ground wire is either the same or heavier gauge than the power wires.
- Do not use aluminum wires in the power supply's power cord.
- To prevent the possibility of a terminal short, use a pin terminal that has an insulating sleeve.
- If the ends of the individual wires are not twisted correctly, the wires may create a short circuit.
- The conductor type is solid or stranded wire.
- Use copper wire rated for 75 °C (167°F).

Power Cord Diameter	0.75...2.5 mm^2 (18...13 AWG)*1
Conductor type	Solid or stranded wire
Conductor length	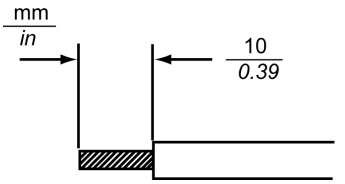

*1 For UL compatibility, use AWG 14 or AWG 13.

DC Power Supply Connector Specifications: Spring Clamp Terminal Blocks

Models except for HMIDT351 come with the right-angle-type power connector, and the HMIDT351 comes with the straight-type power connector.

Right-angle type

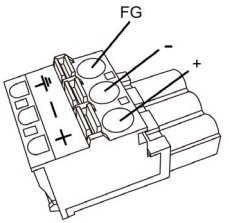

Straight type

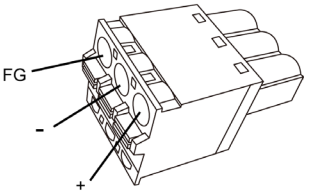

Connection	Wire
+	12...24 Vdc
-	0 Vdc
FG	Grounded terminal connected to the panel chassis.

NOTE:

- You cannot connect the right-angle type to the HMIDT351.
- Right-angle type: HMIZGPWS2 manufactured by Schneider Electric.
  Straight type: HMIZGPWS manufactured by Schneider Electric.

How to connect the DC Power Cord

Step	Action
1	Confirm the power cord is not connected to the power supply.
2	Check the rated voltage and remove the “DC24V” sticker on the DC power supply connector.
3	Connect each wire from the power cable to a pin terminal.
4	Push the Opening button with a small and flat screwdriver to open the desired pin hole.
5	Insert each power cord wire into its corresponding hole. Release the Opening button to clamp the wire in place. 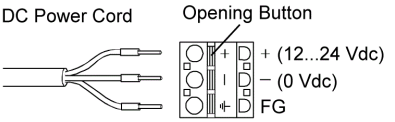 When using stranded wire, do not short with neighboring wires.
6	After inserting all three power cord wires, insert the DC power supply connector into the power connector on this product.

NOTE: Do not solder the wire directly to the power crimp pin.

Connecting the Power Supply

Precautions

⚠ ⚠ DANGER

SHORT CIRCUIT, FIRE, OR UNINTENDED EQUIPMENT OPERATION

Avoid excessive force on the power cable to prevent accidental disconnection

- Securely attach power cables to an installation panel or cabinet.
- Install and fasten this product on installation panel or cabinet prior to connecting power supply and communication lines.

Failure to follow these instructions will result in death or serious injury.

Improving Noise/Surge Resistance

- This product's power supply cord should not be bundled with or kept close to main circuit lines (high voltage, high current), power lines, or input/output lines, and their various systems should be kept separate. When power lines cannot be wired via a separate system, use shielded cables for input/output lines.
- Make the power cord as short as possible, and be sure to twist the ends of the wires together (i.e. twisted pair cabling) from close to the power supply unit.
- If there is an excess amount of noise on the power supply line, connect a noise reducing transistor before turning on the power.
- Connect a surge protection device to handle power surges.
- To increase noise resistance, attach a ferrite core to the power cable.

Power Supply Connections

- When supplying power to this product, connect the power as shown below.

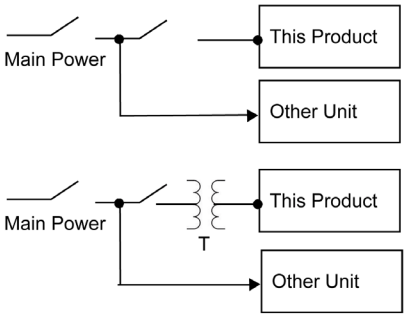

- Branch Circuit Protective device shall be used for rating 20 A for 12 to 24 Vdc input device on the models except for HMIDT351.
- You must use DC input with an isolating source for the models except for HMIDT351.
- You must use DC input with a Class 2 power supply for HMIDT351.
- The following shows a surge protection device connection:

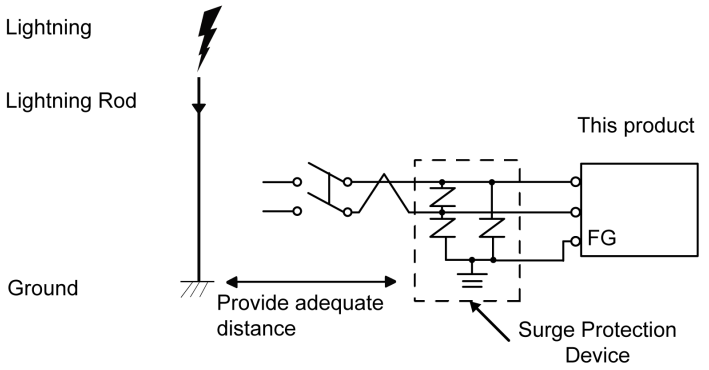

- Attach a surge protection device to prevent damage to this product as a result of a lightning-induced power surge from a large electromagnetic field generated from a direct lightning strike. We also strongly recommend to connect the crossover grounding wire of this product to a position close to the ground terminal of the surge protection device.
  It is expected that there will be an effect on this product due to fluctuations in grounding potential when there is a large surge flow of electrical energy to the lightning rod ground at the time of a lightning strike. Provide adequate distance between the lightning rod grounding point and the surge protection device grounding point.

- If the voltage variation is outside the prescribed range, connect a regulated power supply.

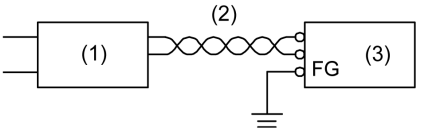

1 Regulated power supply
2 Twisted-pair cord
3 This product

- Select a power supply low in noise for between the line and ground. If there is an excessive amount of noise, connect an insulating transformer.
  Use isolating transformers with capacities exceeding the maximum power consumption, including that of the Box Module. Refer to the Electrical Specification for the Display Module *(see page 63)*.

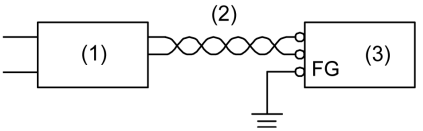

1 Insulating transformer
2 Twisted-pair cord
3 This product

Grounding

Exclusive Grounding

Always ground the FG (functional ground) terminal. Be sure to separate this product from the FG of other devices as shown below.

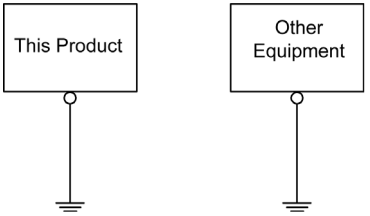

Precautions

- Check that the grounding resistance is 100 Ω or less.*1
- The FG wire should have a cross sectional area greater than 2 mm^2 (AWG14)*1. Create the connection point as close to this product as possible, and make the wire as short as possible. When using a long grounding wire, replace the thin wire with a thicker wire, and place it in a duct.
- The SG (signal ground) and FG (functional ground) terminals are connected internally in this product. When connecting the SG line to another device, be sure that no shorting loops are formed.

*1 Observe local codes and standards.

Common Grounding

Electromagnetic Interference (EMI) can be created if devices are improperly grounded. EMI can cause loss of communication. If exclusive grounding is not possible, use a common grounding point as shown in the configuration below. Do not use any other configuration for common grounding.

Correct grounding

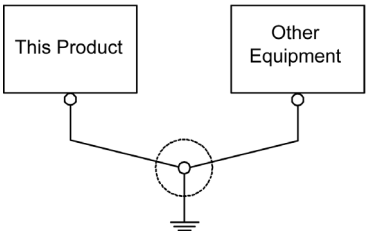

Incorrect grounding

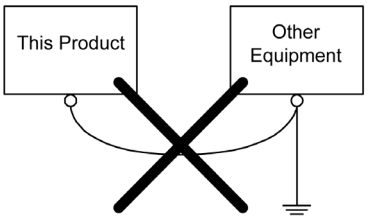

Section 6.3
USB Cable Clamp

USB Clamp Type A (1 port)

Introduction

When using a USB device, attach a USB cable clamp to the USB interface to prevent the USB cable from being disconnected.

⚠ DANGER

POTENTIAL FOR EXPLOSION

- Verify the power, input, and output (I/O) wiring are in accordance with Class I, Division 2 wiring methods.
- Substitution of any components may impair suitability for Class I, Division 2.
- Do not disconnect equipment while the circuit is live or unless the area is known to be free of ignitable concentrations.
- Remove power before attaching or detaching any connectors to or from this product.
- Ensure that power, communication, and accessory connections do not place excessive stress on the ports. Consider the vibration in the environment when making this determination.
- Securely attach power, communication, and external accessory cables to the panel or cabinet.
- Use only commercially available USB cables.
- Use only non-incendive USB configurations.
- Suitable for use in Class I, Division 2, Groups A, B, C, D Hazardous Locations.
- Confirm that the USB cable has been attached with the USB cable clamp before using the USB interface.

Failure to follow these instructions will result in death or serious injury.

Attaching USB Clamp Type A (1 port)

NOTE: Watch your fingers. The edge of the clip is sharp.

Step	Action
1	Mount the clip to the USB mark connector shell so that it overlaps. The clip matches the 27 to 43.5 mm (1.06 to 1.71 in) length of the USB connector. 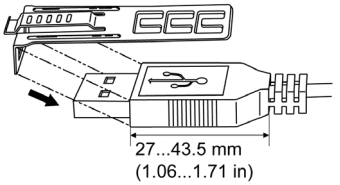 **NOTE:** When installing clamps to reduce cable stress onto both USB1 and USB2, at USB1 overlay the clip on the side with the USB mark, and on USB2 the side without the USB mark. Make sure the ties do not interfere with the other.
2	Align the clip and the USB cable connector shell. Adjust the position of the holes where the clip is attached. To ensure stability, select the clip-hole position that is closest to the base of the connector shell. 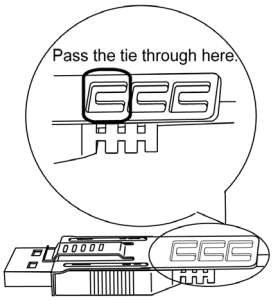

Step	Action
3	As shown, pass the tie through the clip hole. Next, turn the tie and pass it through the head so that the USB cable can pass through the center of the tie loop. The clip is now attached to the USB cable. 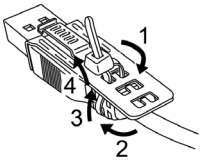 **NOTE:** ● Check the direction of the head beforehand. Make sure the USB cable is through the center of the tie loop and that the tie can pass through the head. ● You can substitute the tie provided with HMIZGCLP1 (manufactured by Schneider Electric), or other commercially available ties with a width of 4.8 mm (0.19 in) and thickness of 1.3 mm (0.05 in).
4	While pressing the grip on the clip, insert the cable from step 3 all the way into the USB host interface. Make sure that the clip tab is secured to the USB cable attached to this product. 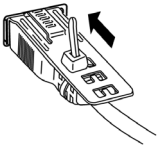

Removing USB Cable Clamp Type A (1 port)

Remove the USB cable while pushing the grip section of the clip.

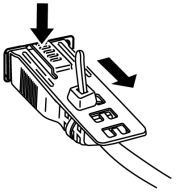

Section 6.4
AUX Connector

Introduction

⚠ ⚠ DANGER

ELECTRIC SHOCK

- Remove the AUX connector from this product prior to wiring.
- Strip wires only to the required length.
- Do not solder the wire itself.

Failure to follow these instructions will result in death or serious injury.

Step	Action
1	Insert the screwdriver into the opening button. This will open the wire's round-shaped hole.
2	Hold the screwdriver and insert the wire into the wire's round-shaped hole.
3	Take out the screwdriver from the opening button. The round-shaped hole will then close, and the wire will be held securely in place. To remove the wire, re-insert the screwdriver into the opening button and when the wire's spring clamp releases, pull the wire out. 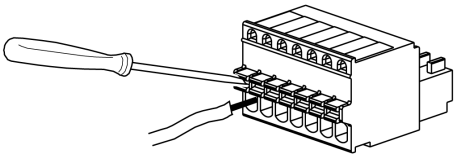
4	Insert the wired AUX connector into the Auxiliary Output/Speaker Output Interface (AUX) of this product.

Recommendations:

- AUX Connector: HMIZGAUX manufactured by Schneider Electric
- Screwdriver: Be sure the screwdriver has the following dimensions:
  - point depth: 0.4 mm (0.02 in)
  - point height: 2.0 mm (0.08 in)

  Point shape should have isolation properties meeting DIN 5264 and EN60900.

NOTE:

- Wire should be AWG 28 to AWG 20 thick and twisted.
- Applicable wire sizes are Style 1015 and Style 1007.
- Be sure to strip 8.0 mm (0.31 in) of cover from the wire.
- Use copper wire rated for 75 °C (167 °F).

Section 6.5
SD Card Insertion/Removal

What Is in This Section?

This section contains the following topics:

Topic	Page
Introduction	150
Inserting the SD Card	151
Removing the SD Card	153
SD Card Data Backup	155

Introduction

NOTICE
LOSS OF DATA When using a SD Card: ● Make sure you regularly back up the SD Card data since the SD Card has a life span and accidental data loss can occur at any time. ● While a SD Card is accessed, do not turn OFF or reset this product, and do not insert or remove the SD Card. Doing so could damage the SD Card, or corrupt its data. ● Before removing the SD Card from this product, stop all operations on the SD Card. ● Make sure of the SD Card's orientation before inserting it into the SD Card slot. **Failure to follow these instructions can result in equipment damage.**

NOTICE
LOSS OF DATA When handling the SD Card: ● Avoid storing the SD Card where there is static electricity or electromagnetic waves. ● Avoid storing the SD Card in direct sunlight, near a heater, or other locations where high temperatures can occur. ● Do not bend the SD Card. ● Do not drop or strike the SD Card against another object. ● Keep the SD Card dry. ● Do not touch the SD Card connectors. ● Do not disassemble or modify the SD Card. ● Use the SD Card initialized by this product. You may not be able to use the SD Card initialized by other devices. **Failure to follow these instructions can result in equipment damage.**

Inserting the SD Card

NOTE: As shown in the image below (example on the left-hand side), you can set the Write-Control Tab to prevent write operations to the SD Card. Push the tab up, as shown in the example on the right-hand side, to release the lock and enable writing to the SD Card. Before using a commercial-type SD Card, read the manufacturer's instructions.

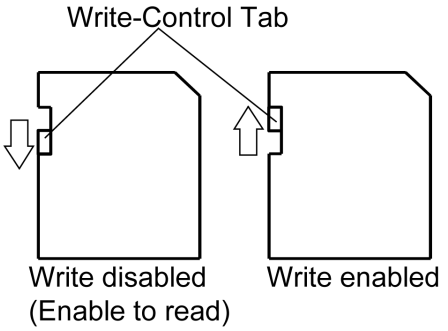

Step	Action
1	Open the Storage Card Cover. 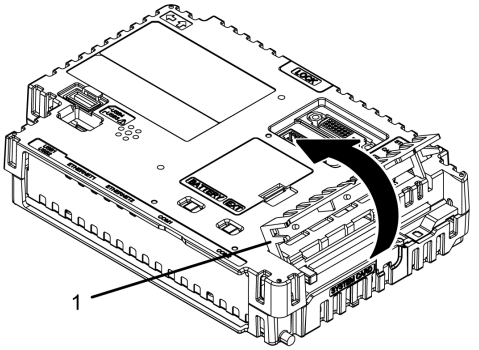 **1** Storage Card Cover

Step	Action
2	Insert the SD Card into the SD Card Slot with the front face of the SD Card facing up and push until you hear it “click”. 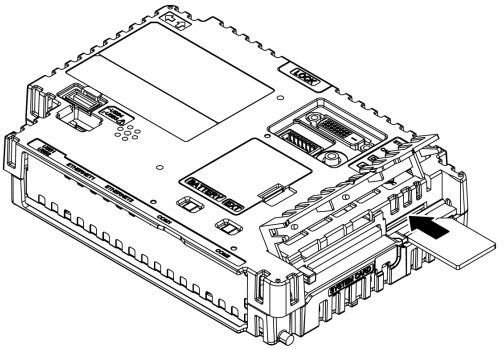
3	Close the Storage Card Cover.

Removing the SD Card

If you remove the SD Card while it is in use, you risk corrupting your data. Before removing the SD Card from this product, stop all operations on the SD Card.

For instructions on removing the SD Card safely, refer to the corresponding topic in the manual of your screen editing software.

When using the Open Box, use Windows® hardware removal tool to safely remove the SD Card.

Step	Action
1	Make sure the Card Access LED is off. 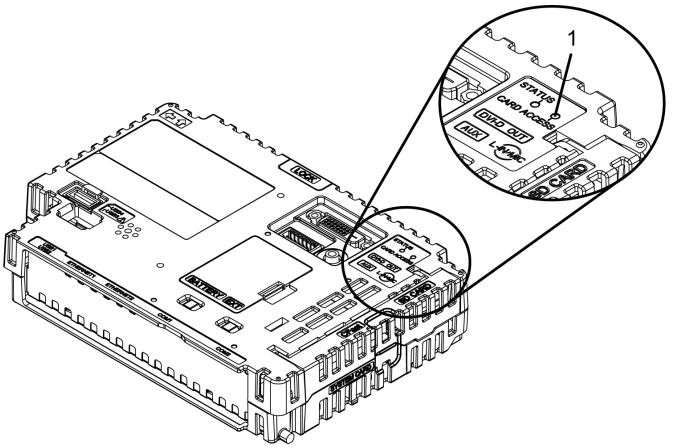 **1** Card Access LED

Step	Action
2	Open the Storage Card Cover. 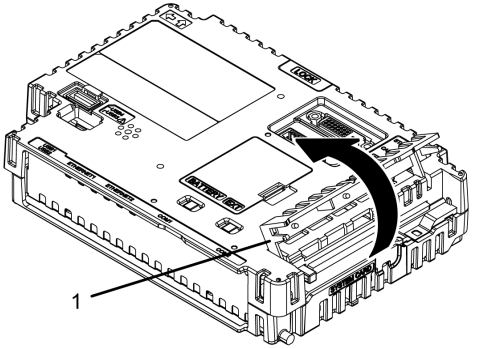 **1** Storage Card Cover
3	Push the SD Card once to release, and pull out the card. **NOTE:** After using the SD Card, store the SD Card in its case or other safe location.
4	Close the Storage Card Cover.

SD Card Data Backup

To make your backups, you can either insert the SD Card directly into the SD Card Slot on your computer, or use a commercially available SD Card reader.

Section 6.6
CFast Card Insertion/Removal

What Is in This Section?

This section contains the following topics:

Topic	Page
Introduction	157
Inserting the CFast Card	158
Removing the CFast Card	160
CFast Card Data Backup	162

Introduction

NOTICE
LOSS OF DATA When using a CFast Card: ● Make sure you regularly back up the CFast Card data since the CFast Card has a life span and accidental data loss can occur at any time. ● While a CFast Card is accessed, do not turn OFF or reset this product, and do not remove the CFast Card. Doing so could damage the CFast Card, or corrupt its data. ● Turn OFF this product when inserting or removing the CFast Card. ● Make sure of the CFast Card's orientation before inserting it into the CFast Card slot. **Failure to follow these instructions can result in equipment damage.**

NOTICE
LOSS OF DATA When handling the CFast Card: ● Avoid storing the CFast Card where there is static electricity or electromagnetic waves. ● Avoid storing the CFast Card in direct sunlight, near a heater, or other locations where high temperatures can occur. ● Do not bend the CFast Card. ● Do not drop or strike the CFast Card against another object. ● Keep the CFast Card dry. ● Do not touch the CFast Card connectors. ● Do not disassemble or modify the CFast Card. ● Use the CFast Card initialized by this product. You may not be able to use the CFast Card initialized by other devices. **Failure to follow these instructions can result in equipment damage.**

Inserting the CFast Card

Step	Action
1	Open the Storage Card cover. 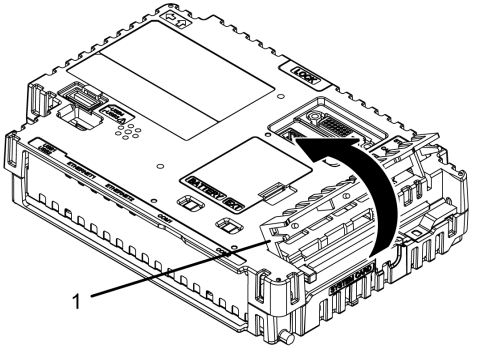 **1** Storage Card Cover

Step	Action
2	Insert the CFast Card into the CFast Card Slot with the front face of the CFast Card facing up, and push until the eject button comes out. 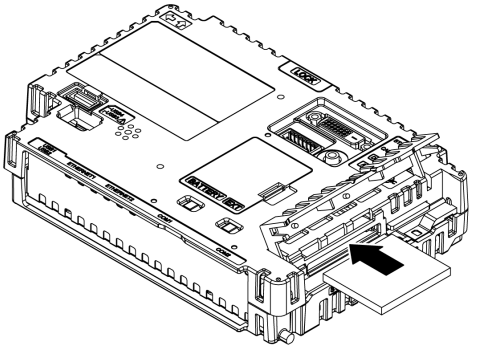 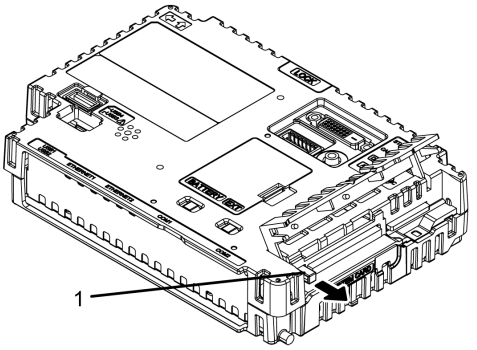 **1** Eject button
3	Close the Storage Card Cover.

Removing the CFast Card

If you remove the CFast Card while it is in use, you risk corrupting your data. Turn OFF this product when removing the CFast Card.

Step	Action
1	Make sure that this product is turned OFF.
2	Open the Storage Card Cover. 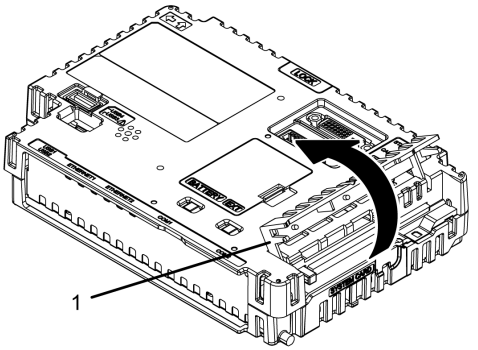 **1** Storage Card Cover

Step	Action
3	Push the eject button to release, and pull out the card. 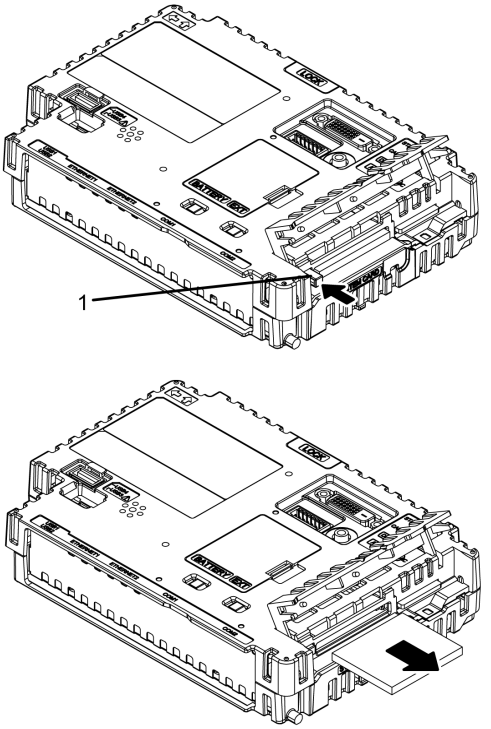 **1** Eject button
4	Close the Storage Card Cover. **NOTE:** After using the CFast Card, store the CFast Card in its case or other safe location.

CFast Card Data Backup

To make your backups, you can either insert the CFast Card directly into the CFast Card Slot on your computer, or use a commercially available CFast Card reader.

Section 6.7
Front USB Cover

Opening the Front USB Cover

For Smart Display, the front surface is IP66F*1, IP67F*1, Type 1, Type 4X (Indoor Use Only) or Type 13 Enclosure, but when the front USB cover*2 is open, the front surface is Type 1 Enclosure.

⚠ CAUTION
RISK OF INJURY When opening the Front USB Cover, be careful not to injure your fingers. **Failure to follow these instructions can result in injury or equipment damage.**

*1 IP66F and IP67F are not part of the UL certification.

*2 The necessary torque is 0.5 N•m (4.4 lb-in).

Step	Action
1	Loosen the screws on the top of the front USB cover with a Phillips screwdriver. 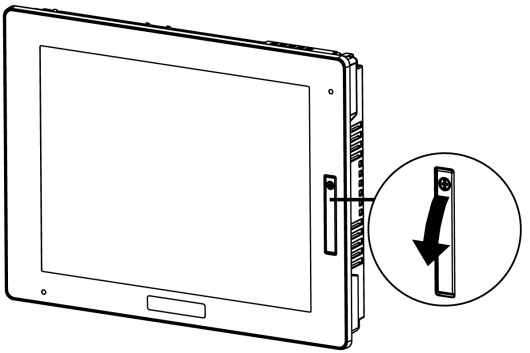 **NOTE:** The required torque is 0.5 N•m (4.4 lb-in).

Step	Action
2	The USB interface can be seen once you pull down the front USB cover. 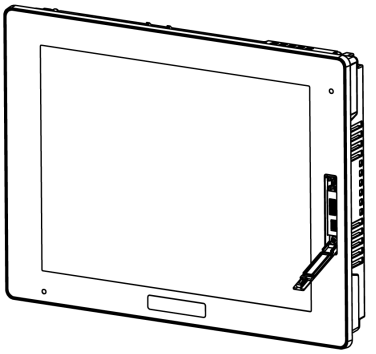

NOTICE
BROKEN ENCLOSURE Do not exert more than 0.5 N•m (4.4 lb-in) of torque when tightening the screw. **Failure to follow these instructions can result in equipment damage.**

Section 6.8
Isolation Unit

What Is in This Section?

This section contains the following topics:

Topic	Page
Introduction	166
Installing to the Box Module	167

Introduction

NOTE: For details such as settings when using the Isolation Unit, refer to the product manual.

⚠ ⚠ DANGER

HAZARD OF ELECTRIC SHOCK OR EXPLOSION

To avoid an electric shock, prior to connecting the Isolation Unit to this product, confirm that this product's power supply is completely turned OFF.

Failure to follow these instructions will result in death or serious injury.

Installing to the Box Module

You can install the Isolation Unit to the back of the Box Module or to the installation panel. For more information on how to attach the Isolation Unit to the installation panel, please refer to the Isolation Unit Quick Reference Guide.

Step	Action
1	Check the locations of two screw holes on the front of the Box Module. 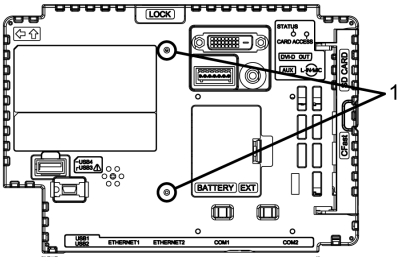 **1** Hole
2	Install one of the two Attachment Screws included in the Isolation Unit to the Box Module. Use a torque of 0.5 N•m (4.4 lb-in). **1** Attachment Screw **A** Box Module
3	Attach the Isolation Unit to the Box Module. 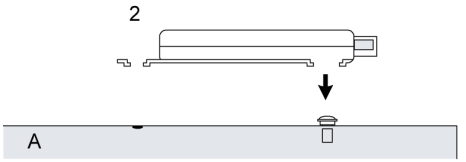 **2** Isolation Unit **A** Box Module

Step	Action
4	Slide the Isolation Unit in the direction of the arrow so the Isolation Unit is hooked by the screw from Step 2. **A** Box Module
5	Secure the Isolation Unit in place with another Attachment Screw. Use a torque of 0.5 N•m (4.4 lb-in). 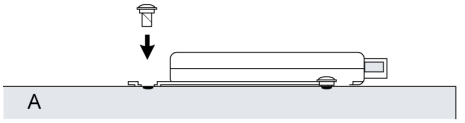 **A** Box Module

NOTE:

- Attach the Isolation Unit to a stable surface. Do not leave the Isolation Unit hanging by its cord.
- Be careful with wire placement. Overlapping cords may cause noise.
- When attaching the Isolation Unit to the Box Module, be careful with the attachment position.
- See the illustration below for recommended installation.

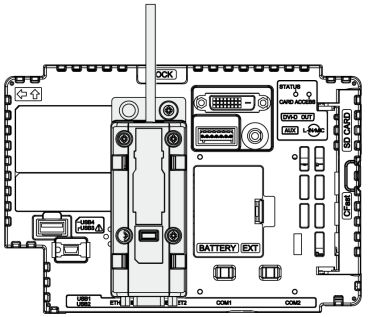

Chapter 7
Maintenance

What Is in This Chapter?

This chapter contains the following topics:

Topic	Page
Regular Cleaning	170
Periodic Check Points	171
Replacing the Installation Gasket	172
Replacing the Primary Battery	174
Replacing the System Card (SD Card)	177
Replacing the System Card (CFast Card)	180
Replacing the Backlight	183

Regular Cleaning

Cleaning this product

NOTICE
EQUIPMENT DAMAGE ● Power off this product before cleaning it. ● Do not use hard or pointed objects to operate the touch panel as you may damage the panel surface. ● Do not use paint thinner, organic solvents, or a strong acid compound to clean the unit. **Failure to follow these instructions can result in equipment damage.**

When this product gets dirty, soak a soft cloth in water with a neutral detergent, wring the cloth tightly and wipe this product.

Periodic Check Points

Operation Environment

- Is the operating temperature within the allowable range? (0...60 °C [32...140 °F])
- Is the operating humidity within the specified range? (10%RH to 90%RH, dry bulb temperature of 39 °C [102.2 °F] or less)
- Is the operating atmosphere free of corrosive gasses?

When this product is inside a panel, the ambient environment refers to the interior of the panel.

Electrical Specifications

- Is the input voltage appropriate? (10.8...28.8 Vdc)
- Are all power cords and cables connected properly? Are there any loose cables?
- Are all mounting brackets holding the unit securely?
- Are there scratches or traces of dirt on the installation gasket?

Unit Disposal

When disposing this product, dispose it in a manner appropriate to, and in accordance with, your country's industrial machinery disposal/recycling standards.

Replacing the Installation Gasket

Introduction

The installation gasket provides protection against dust and moisture.

NOTICE
GASKET AGING ● Inspect the gasket periodically as required by your operating environment to keep the initial IP level. ● Change the gasket at least once a year, or as soon as scratches or dirt become visible. **Failure to follow these instructions can result in equipment damage.**

Installing the Installation Gasket

Stage	Description
1	Place the Display Module on a flat, level surface, with the display face pointing down.
2	Remove the gasket from the Display Module.
3	Attach the new gasket to the Display Module. Insert the protrusions from the four corners of the gasket into the corresponding holes in the corners of the Display Module. **NOTE:** When using a tool to insert the gasket, make sure the tool does not catch the rubber gasket and cause a tear. 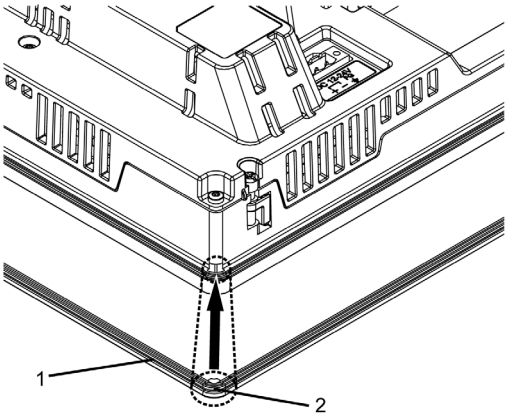 **1** Installation Gasket **2** Protruding point

The gasket must be inserted correctly into the groove for moisture resistance for the Display Module.

⚠ CAUTION
EQUIPMENT DAMAGE Since the gasket is flexible but not elastic, be careful not to stretch it unnecessarily. **Failure to follow these instructions can result in injury or equipment damage.**

Replacing the Primary Battery

Introduction

Backup clock data uses a Supercapacitor (electric double-layer capacitor) for power. When the voltage from the Supercapacitor is low, clock data is lost[*1] when this product is turned OFF. The average period for backup is as follows:

Initial: approximately 100 days

After 5 years: approximately 30 days (used at ambient temperature of 25 °C [77 °F])

*1 If clock data is lost, a clock data error message appears when starting up this product. When this happens, please set up the clock again. Refer to your screen editing software manual on how to set up the clock.

By connecting the optional backup battery (Part Number HMIZGBAT) for clock data backup, you can maintain a backup period of up to 10 years or more (when used with an ambient temperature of 25 °C [77 °F]).

NOTE:

- Because the battery for clock data backup is a lithium battery, its performance degrades based on the temperature. As a result, when the battery's ambient temperature is higher, the backup period is shorter.
  Battery ambient temperature 40 °C (104 °F): 10 years or more
  Battery ambient temperature 50 °C (122 °F): 4.1 years or more
  Battery ambient temperature 60 °C (140 °F): 1.5 years

When the voltage of the Supercapacitor drops at the same time as the voltage in the Battery for Memory Backup, clock data is lost when power is disconnected. If the clock data error message appears while the Battery for Memory Backup is connected, the Battery for Memory Backup is low and requires replacement.

⚠⚠ DANGER

HAZARD OF ELECTRIC SHOCK, EXPLOSION, OR ARC FLASH

- Remove all power from the device before removing any covers or elements of the system, and prior to installing or removing any accessories, hardware, or cables.
- Unplug the power cable from both this product and the power supply.
- Always use a properly rated voltage sensing device to confirm power is off.
- Replace and secure all covers or elements of the system before applying power to this product.
- Use only the specified voltage when operating this product. This product is designed to use 12 to 24 Vdc. Always check whether your device is DC powered before applying power.

Failure to follow these instructions will result in death or serious injury.

⚠ DANGER

EXPLOSION, FIRE, OR CHEMICAL HAZARD

- Use this product's replacement battery only.
- Do not cause a short circuit.
- Recycle or properly dispose of used batteries.

Failure to follow these instructions will result in death or serious injury.

NOTICE

LOSS OF DATA

- Before replacing the Battery for Memory Backup, supply power to the Box Module for 5 minutes or more.
- Replace the Battery for Memory Backup regularly every five years after you purchase this product.
- Allow only qualified personnel to change the Battery for Memory Backup.

Failure to follow these instructions can result in equipment damage.

Step	Action
1	Disconnect the power supply from this product.
2	Touch the housing or ground connection to discharge any electrostatic charge from your body.
3	Place the Box Module on a flat, level surface, with the front side pointing up.
4	Open the Expansion Unit Interface Cover on the Box Module. 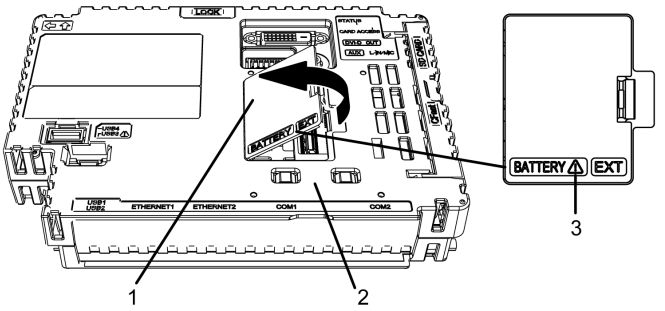 **1** Expansion Unit Interface Cover **2** Box Module **3** Safety alert symbol (see the safety messages stated on this page and on the previous page)

Step	Action
5	If the Battery for Memory Backup is already installed, slide the Battery for Memory Backup in the direction of the arrow as illustrated. Unplug the cable from the connector. 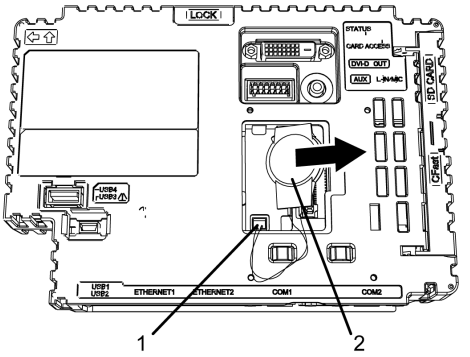 **1** Connector **2** Battery
6	Insert a new Battery for Memory Backup and the connector all the way. Either side of the battery can face top or bottom. 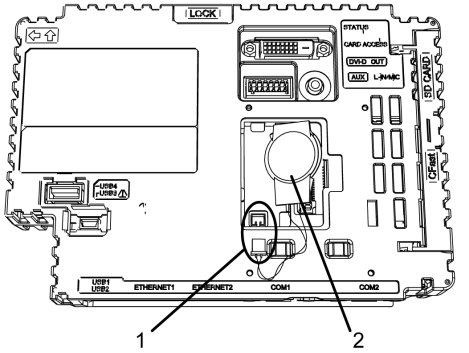 **1** Connector **2** Battery
7	Close the Expansion Unit Interface Cover. **NOTE:** Make sure the cable is inserted completely inside the enclosure. Otherwise, you can damage the cable when you close the cover.
8	Reconnect the power supply to this product. **NOTE:** After reconnecting the power supply, set up the clock again. Refer to your screen editing software manual on how to set up the clock.

Replacing the System Card (SD Card)

The System Card is an SD Card with the operating system installed on it.

To replace the System Card, use a SD Card manufactured by Schneider Electric. See the Accessories *(see page 38)*.

NOTICE
LOSS OF DATA When using a SD Card: ● Make sure you regularly back up the SD Card data since the SD Card has a life span and accidental data loss can occur at any time. ● While a SD Card is accessed, do not turn OFF or reset this product, and do not insert or remove the SD Card. Doing so could damage the SD Card, or corrupt its data. ● Make sure of the SD Card's orientation before inserting it into the SD Card slot. **Failure to follow these instructions can result in equipment damage.**

NOTE: For information on backing up your SD card, used as a system card, refer to our website at *www.schneider-electric.com*.

NOTICE
LOSS OF DATA When handling the SD Card: ● Avoid storing the SD Card where there is static electricity or electromagnetic waves. ● Avoid storing the SD Card in direct sunlight, near a heater, or other locations where high temperatures can occur. ● Do not bend the SD Card. ● Do not drop or strike the SD Card against another object. ● Keep the SD Card dry. ● Do not touch the SD Card connectors. ● Do not disassemble or modify the SD Card. **Failure to follow these instructions can result in equipment damage.**

Step	Action
1	Turn OFF this product.
2	Remove the Box Module from the Display Module. **NOTE:** Refer to Installation *(see page 120)*
3	As illustrated, open the System Card Cover in the direction of the arrow. 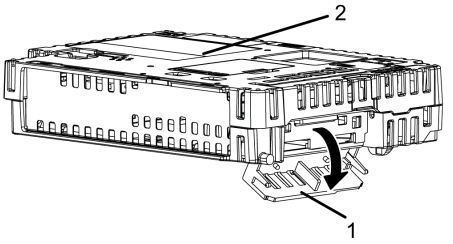 **1** System Card Cover **2** Box Module
4	Push the SD Card once to release, and pull out the card. **NOTE:** After using the SD Card, store the SD Card in its case or other safe location.
5	Insert the SD Card into the System Card Slot with the front face of the SD Card facing down, and push until you hear it “click”. 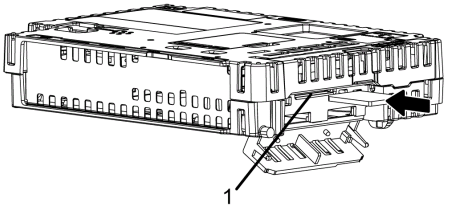 **1** System Card Slot
6	Close the System Card Cover.
7	Mount the Box Module on the Display Module.

NOTE: As shown in the image below (example on the left-hand side), you can set the Write-Control Tab to prevent write operations to the SD Card. Push the tab up, as shown in the example on the right-hand side, to release the lock and enable writing to the SD Card.

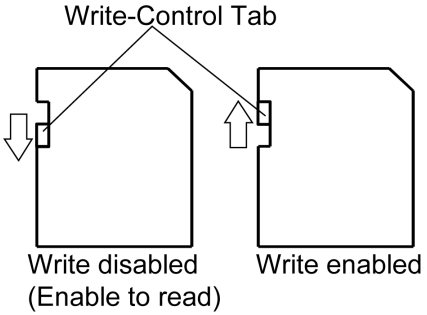

Replacing the System Card (CFast Card)

The System Card is a CFast Card with the operating system installed on it.

To replace the System Card, use CFast Card manufactured by Schneider Electric. See the "Accessories *(see page 38)*".

NOTICE
LOSS OF DATA When using a CFast Card: ● Make sure you regularly back up the CFast Card data since the CFast Card has a life span and accidental data loss can occur at any time. ● While a CFast Card is accessed, do not turn OFF or reset this product, and do not insert or remove the CFast Card. Doing so could damage the CFast Card, or corrupt its data. ● Turn OFF this product when inserting or removing the CFast Card. ● Make sure of the CFast Card's orientation before inserting it into the CFast Card slot. **Failure to follow these instructions can result in equipment damage.**

NOTE: For information on backing up your CFast card, which is used as a system card, use the system backup software included on the provided restore DVD.

NOTICE
LOSS OF DATA When handling the CFast Card: ● Avoid storing the CFast Card where there is static electricity or electromagnetic waves. ● Avoid storing the CFast Card in direct sunlight, near a heater, or other locations where high temperatures can occur. ● Do not bend the CFast Card. ● Do not drop or strike the CFast Card against another object. ● Keep the CFast Card dry. ● Do not touch the CFast Card connectors. ● Do not disassemble or modify the CFast Card. **Failure to follow these instructions can result in equipment damage.**

Step	Action
1	Turn OFF this product.
2	Remove the Box Module from the Display Module. **NOTE:** Refer to Installation *(see page 120)*.
3	As illustrated, open the System Card Cover in the direction of the arrow. 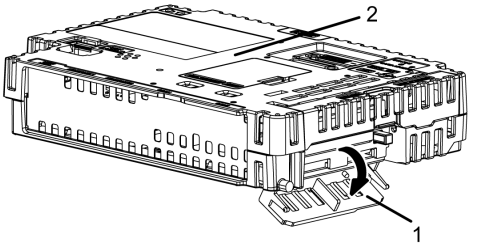 **1** System Card Cover **2** Box Module
4	Push the eject button once to release, and pull out the card. 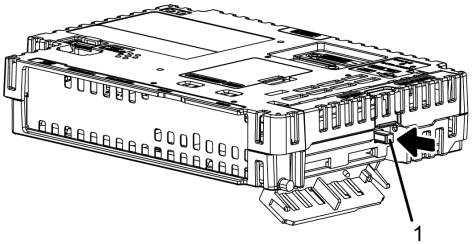 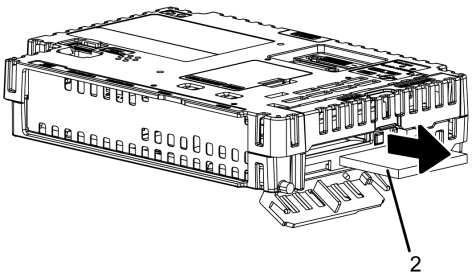 **NOTE:** After using the CFast card, store the CFast Card in its case or other safe location. **1** Eject button **2** System Card

Step	Action
5	Insert the CFast Card into the System Card Slot with the front face of the CFast Card facing down, and push until the eject button comes out. 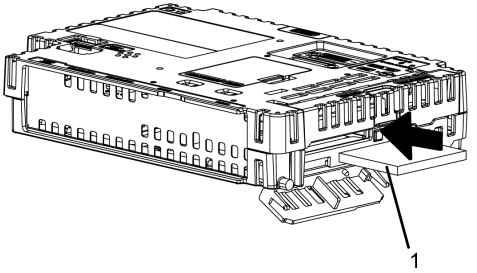 **1** System Card
6	Close the System Card Cover.
7	Mount the Box Module on the Display Module.

Replacing the Backlight

Not user replaceable. When replacement is required, contact your local distributor.

Index

A

Accessories, *38*

B

battery, *174*

C

caution
  loss of data, *150*, *157*, *177*, *180*
  equipment damage, *70*, *173*
  injury, *13*, *47*, *50*, *121*, *128*, *134*, *163*
  loss of communication, *86*, *87*
Certifications and Standards, *20*
CFast Card, *156*
  insertion, *158*
CFast Card memory, *74*, *74*
cleaning, *170*
clock, *75*
connecting the power cord, *136*
connecting the power supply, *139*
connection, interface, *82*
connector, AUX, *147*

D

danger
  arc flash, *10*, *24*, *125*, *127*, *129*, *132*, *136*, *174*
  chemical hazard, *175*
  electric shock, *10*, *24*, *87*, *90*, *91*, *125*, *127*, *129*, *132*, *136*, *166*, *174*
  explosion, *10*, *23*, *24*, *25*, *85*, *125*, *127*, *129*, *132*, *136*, *144*, *166*, *174*, *175*
  fire, *23*, *25*, *139*, *175*
  short circuit, *139*
  unintended equipment operation, *139*
DC power, *136*
dimensions, *96*, *99*

G

gasket, *173*
grounding, *142*

I

insert SD Card, *149*
installation
  procedures, *120*
installation gasket, *172*
interface
  serial, *86*, *87*
isolation unit, *165*

M

maintenance, *169*
  check points, *171*
Maintenance
  Cleaning, *170*
maintenance accessories, *42*
memory, *74*
model name format, *16*

N

notice
  loss of data, *150*, *157*, *177*, *180*
  loss of data, *175*
  overtorque, *132*, *164*

O

oil, *70*
output interface, AUX, *90*
output interface, DVI-D, *91*

P

parts identification and functions, *45*, *48*, *53*
power plug, *137*

R

remove SD Card, *149*
replacing the battery, *174*

S

SD Card
    backup, *155*
    insertion, *151*
SD Card memory, *74*
specifications
    display, *72*
    electrical, *63*
    environmental, *66*
    interfaces, *78*
    structural, *68*
system design, *36*

T

touch panel, *76*

U

USB
    cable clamp for USB Type A, *144*
USB cover, *163*
USB cover, opening, *163*

W

warning
    electromagnetic interference, *22*
    unintended equipment operation, *11*

Modicon M241 Logic Controller

Hardware Guide

03/2018

EIO0000001456.07

www.schneider-electric.com

The information provided in this documentation contains general descriptions and/or technical characteristics of the performance of the products contained herein. This documentation is not intended as a substitute for and is not to be used for determining suitability or reliability of these products for specific user applications. It is the duty of any such user or integrator to perform the appropriate and complete risk analysis, evaluation and testing of the products with respect to the relevant specific application or use thereof. Neither Schneider Electric nor any of its affiliates or subsidiaries shall be responsible or liable for misuse of the information contained herein. If you have any suggestions for improvements or amendments or have found errors in this publication, please notify us.

You agree not to reproduce, other than for your own personal, noncommercial use, all or part of this document on any medium whatsoever without permission of Schneider Electric, given in writing. You also agree not to establish any hypertext links to this document or its content. Schneider Electric does not grant any right or license for the personal and noncommercial use of the document or its content, except for a non-exclusive license to consult it on an "as is" basis, at your own risk. All other rights are reserved.

All pertinent state, regional, and local safety regulations must be observed when installing and using this product. For reasons of safety and to help ensure compliance with documented system data, only the manufacturer should perform repairs to components.

When devices are used for applications with technical safety requirements, the relevant instructions must be followed.

Failure to use Schneider Electric software or approved software with our hardware products may result in injury, harm, or improper operating results.

Failure to observe this information can result in injury or equipment damage.

© 2018 Schneider Electric. All Rights Reserved.

Table of Contents

Safety Information 7
About the Book 9
Part I Modicon M241 Logic Controller Introduction 15
Chapter 1 M241 General Overview 17
M241 Logic Controller Description 18
Maximum Hardware Configuration 23
TMC4 Cartridges 26
TM4 Expansion Modules 27
TM3 Expansion Modules 28
TM2 Expansion Modules 37
Accessories 41
Chapter 2 M241 Features 43
Real Time Clock (RTC) 44
Input Management 48
Output Management 52
Run/Stop 57
SD Card 59
Chapter 3 M241 Installation 63
3.1 M241 Logic Controller General Rules for Implementing 64
Environmental Characteristics 65
Certifications and Standards 68
3.2 M241 Logic Controller Installation 69
Installation and Maintenance Requirements 70
M241 Logic Controller Mounting Positions and Clearances 73
Top Hat Section Rail (DIN rail) 76
Installing and Removing the Controller with Expansions 80
Direct Mounting on a Panel Surface 82
3.3 M241 Electrical Requirements 83
Wiring Best Practices 84
DC Power Supply Characteristics and Wiring 90
AC Power Supply Characteristics and Wiring 94
Grounding the M241 System 96

Part II Modicon M241 Logic Controller 101
Chapter 4 TM241C24R 103
TM241C24R Presentation 103
Chapter 5 TM241CE24R 109
TM241CE24R Presentation 109
Chapter 6 TM241CEC24R 115
TM241CEC24R Presentation 115
Chapter 7 TM241C24T 121
TM241C24T Presentation 121
Chapter 8 TM241CE24T 127
TM241CE24T Presentation 127
Chapter 9 TM241CEC24T 133
TM241CEC24T Presentation 133
Chapter 10 TM241C24U 139
TM241C24U Presentation 139
Chapter 11 TM241CE24U 145
TM241CE24U Presentation 145
Chapter 12 TM241CEC24U 151
TM241CEC24U Presentation 151
Chapter 13 TM241C40R 157
TM241C40R Presentation 157
Chapter 14 TM241CE40R 163
TM241CE40R Presentation 163
Chapter 15 TM241C40T 169
TM241C40T Presentation 169
Chapter 16 TM241CE40T 175
TM241CE40T Presentation 175
Chapter 17 TM241C40U 181
TM241C40U Presentation 181
Chapter 18 TM241CE40U 187
TM241CE40U Presentation 187
Chapter 19 Embedded I/O Channels 193
Digital Inputs 194
Relay Outputs 202
Regular Transistor Outputs 208
Fast Transistor Outputs 213

Part III Modicon M241 Logic Controller Communication . . . 219
Chapter 20 Integrated Communication Ports 221
CAN Port 222
Ethernet Port 226
USB Mini-B Programming Port 229
Serial Line 1 231
Serial Line 2. 234
Chapter 21 Connecting the M241 Logic Controller to a PC 237
Connecting the Controller to a PC. 237
Glossary 241
Index 247

Safety Information

Important Information

NOTICE

Read these instructions carefully, and look at the equipment to become familiar with the device before trying to install, operate, service, or maintain it. The following special messages may appear throughout this documentation or on the equipment to warn of potential hazards or to call attention to information that clarifies or simplifies a procedure.

The addition of this symbol to a “Danger” or “Warning” safety label indicates that an electrical hazard exists which will result in personal injury if the instructions are not followed.

This is the safety alert symbol. It is used to alert you to potential personal injury hazards. Obey all safety messages that follow this symbol to avoid possible injury or death.

⚠ DANGER

DANGER indicates a hazardous situation which, if not avoided, **will result in** death or serious injury.

⚠ WARNING

WARNING indicates a hazardous situation which, if not avoided, **could result in** death or serious injury.

⚠ CAUTION

CAUTION indicates a hazardous situation which, if not avoided, **could result** in minor or moderate injury.

NOTICE

NOTICE is used to address practices not related to physical injury.

PLEASE NOTE

Electrical equipment should be installed, operated, serviced, and maintained only by qualified personnel. No responsibility is assumed by Schneider Electric for any consequences arising out of the use of this material.

A qualified person is one who has skills and knowledge related to the construction and operation of electrical equipment and its installation, and has received safety training to recognize and avoid the hazards involved.

QUALIFICATION OF PERSONNEL

Only appropriately trained persons who are familiar with and understand the contents of this manual and all other pertinent product documentation are authorized to work on and with this product.

The qualified person must be able to detect possible hazards that may arise from parameterization, modifying parameter values and generally from mechanical, electrical, or electronic equipment. The qualified person must be familiar with the standards, provisions, and regulations for the prevention of industrial accidents, which they must observe when designing and implementing the system.

INTENDED USE

The products described or affected by this document, together with software, accessories, and options, are programmable logic controllers (referred to herein as “logic controllers”), intended for industrial use according to the instructions, directions, examples, and safety information contained in the present document and other supporting documentation.

The product may only be used in compliance with all applicable safety regulations and directives, the specified requirements, and the technical data.

Prior to using the product, you must perform a risk assessment in view of the planned application. Based on the results, the appropriate safety-related measures must be implemented.

Since the product is used as a component in an overall machine or process, you must ensure the safety of persons by means of the design of this overall system.

Operate the product only with the specified cables and accessories. Use only genuine accessories and spare parts.

Any use other than the use explicitly permitted is prohibited and can result in unanticipated hazards.

About the Book

At a Glance

Document Scope

Use this document to:

- Install and operate your M241 Logic Controller.
- Connect the M241 Logic Controller to a programming device equipped with SoMachine software.
- Interface the M241 Logic Controller with I/O expansion modules, HMI, and other devices.
- Familiarize yourself with the M241 Logic Controller features.

NOTE: Read and understand this document and all related documents *(see page 9)* before installing, operating, or maintaining your controller.

Validity Note

This document has been updated for the release of TM3TI4D Add-on for SoMachine V4.3.

For product compliance and environmental information (RoHS, REACH, PEP, EOLI, etc.), go to *www.schneider-electric.com/green-premium*.

The technical characteristics of the devices described in this manual also appear online.

The characteristics that are presented in this manual should be the same as those characteristics that appear online. In line with our policy of constant improvement, we may revise content over time to improve clarity and accuracy. If you see a difference between the manual and online information, use the online information as your reference.

Related Documents

Title of Documentation	Reference Number
Modicon M241 Logic Controller - Programming Guide	*EIO0000001456 (ENG)* *EIO0000001457 (FRE)* *EIO0000001458 (GER)* *EIO0000001459 (SPA)* *EIO0000001460 (ITA)* *EIO0000001461 (CHS)*
Modicon TMC4 Cartridges - Hardware Guide	*EIO0000001776 (ENG)* *EIO0000001777 (FRE)* *EIO0000001778 (GER)* *EIO0000001779 (SPA)* *EIO0000001780 (ITA)* *EIO0000001781 (CHS)*

Title of Documentation	Reference Number
Modicon TM4 Expansion Modules - Hardware Guide	*EIO0000001796 (ENG)* *EIO0000001797 (FRE)* *EIO0000001798 (GER)* *EIO0000001799 (SPA)* *EIO0000001800 (ITA)* *EIO0000001801 (CHS)*
Modicon TM3 Digital I/O Modules - Hardware Guide	*EIO0000001408 (ENG)* *EIO0000001409 (FRE)* *EIO0000001410 (GER)* *EIO0000001411 (SPA)* *EIO0000001412 (ITA)* *EIO0000001413 (CHS)* *EIO0000001375 (TUR)* *EIO0000001374 (POR)*
Modicon TM3 Analog I/O Modules - Hardware Guide	*EIO0000001414 (ENG)* *EIO0000001415 (FRE)* *EIO0000001416 (GER)* *EIO0000001417 (SPA)* *EIO0000001418 (ITA)* *EIO0000001419 (CHS)* *EIO0000001379 (TUR)* *EIO0000001378 (POR)*
Modicon TM3 Expert I/O Modules - Hardware Guide	*EIO0000001420 (ENG)* *EIO0000001421 (FRE)* *EIO0000001422 (GER)* *EIO0000001423 (SPA)* *EIO0000001424 (ITA)* *EIO0000001425 (CHS)* *EIO0000001381 (TUR)* *EIO0000001380 (POR)*
Modicon TM3 Safety Modules - Hardware Guide	*EIO0000001831 (ENG)* *EIO0000001832 (FRE)* *EIO0000001833 (GER)* *EIO0000001834 (SPA)* *EIO0000001835 (ITA)* *EIO0000001836 (CHS)* *EIO0000001837 (POR)* *EIO0000001838 (TUR)*

Title of Documentation	Reference Number
Modicon TM3 Transmitter and Receiver Modules - Hardware Guide	EIO0000001426 (ENG) EIO0000001427 (FRE) EIO0000001428 (GER) EIO0000001429 (SPA) EIO0000001430 (ITA) EIO0000001431 (CHS) EIO0000001383 (TUR) EIO0000001382 (POR)
M241 DC Logic Controller - Instruction Sheet	HRB59603
M241 AC Logic Controller - Instruction Sheet	EAV48551

You can download these technical publications and other technical information from our website at https://www.schneider-electric.com/en/download

Product Related Information

⚠ ⚠ DANGER

HAZARD OF ELECTRIC SHOCK, EXPLOSION OR ARC FLASH

- Disconnect all power from all equipment including connected devices prior to removing any covers or doors, or installing or removing any accessories, hardware, cables, or wires except under the specific conditions specified in the appropriate hardware guide for this equipment.
- Always use a properly rated voltage sensing device to confirm the power is off where and when indicated.
- Replace and secure all covers, accessories, hardware, cables, and wires and confirm that a proper ground connection exists before applying power to the unit.
- Use only the specified voltage when operating this equipment and any associated products.

Failure to follow these instructions will result in death or serious injury.

⚠ DANGER

POTENTIAL FOR EXPLOSION

- Only use this equipment in non-hazardous locations, or in locations that comply with Class I, Division 2, Groups A, B, C and D.
- Do not substitute components which would impair compliance to Class I, Division 2.
- Do not connect or disconnect equipment unless power has been removed or the location is known to be non-hazardous.
- Do not use the USB port(s), if so equipped, unless the location is known to be non-hazardous.

Failure to follow these instructions will result in death or serious injury.

⚠ WARNING

LOSS OF CONTROL

- The designer of any control scheme must consider the potential failure modes of control paths and, for certain critical control functions, provide a means to achieve a safe state during and after a path failure. Examples of critical control functions are emergency stop and overtravel stop, power outage and restart.
- Separate or redundant control paths must be provided for critical control functions.
- System control paths may include communication links. Consideration must be given to the implications of unanticipated transmission delays or failures of the link.
- Observe all accident prevention regulations and local safety guidelines.[1]
- Each implementation of this equipment must be individually and thoroughly tested for proper operation before being placed into service.

Failure to follow these instructions can result in death, serious injury, or equipment damage.

[1] For additional information, refer to NEMA ICS 1.1 (latest edition), "Safety Guidelines for the Application, Installation, and Maintenance of Solid State Control" and to NEMA ICS 7.1 (latest edition), "Safety Standards for Construction and Guide for Selection, Installation and Operation of Adjustable-Speed Drive Systems" or their equivalent governing your particular location.

⚠ WARNING

UNINTENDED EQUIPMENT OPERATION

- Only use software approved by Schneider Electric for use with this equipment.
- Update your application program every time you change the physical hardware configuration.

Failure to follow these instructions can result in death, serious injury, or equipment damage.

Terminology Derived from Standards

The technical terms, terminology, symbols and the corresponding descriptions in this manual, or that appear in or on the products themselves, are generally derived from the terms or definitions of international standards.

In the area of functional safety systems, drives and general automation, this may include, but is not limited to, terms such as *safety*, *safety function*, *safe state*, *fault*, *fault reset*, *malfunction*, *failure*, *error*, *error message*, *dangerous*, etc.

Among others, these standards include:

Standard	Description
EN 61131-2:2007	Programmable controllers, part 2: Equipment requirements and tests.
ISO 13849-1:2008	Safety of machinery: Safety related parts of control systems. General principles for design.

Standard	Description
EN 61496-1:2013	Safety of machinery: Electro-sensitive protective equipment. Part 1: General requirements and tests.
ISO 12100:2010	Safety of machinery - General principles for design - Risk assessment and risk reduction
EN 60204-1:2006	Safety of machinery - Electrical equipment of machines - Part 1: General requirements
EN 1088:2008 ISO 14119:2013	Safety of machinery - Interlocking devices associated with guards - Principles for design and selection
ISO 13850:2006	Safety of machinery - Emergency stop - Principles for design
EN/IEC 62061:2005	Safety of machinery - Functional safety of safety-related electrical, electronic, and electronic programmable control systems
IEC 61508-1:2010	Functional safety of electrical/electronic/programmable electronic safety-related systems: General requirements.
IEC 61508-2:2010	Functional safety of electrical/electronic/programmable electronic safety-related systems: Requirements for electrical/electronic/programmable electronic safety-related systems.
IEC 61508-3:2010	Functional safety of electrical/electronic/programmable electronic safety-related systems: Software requirements.
IEC 61784-3:2008	Digital data communication for measurement and control: Functional safety field buses.
2006/42/EC	Machinery Directive
2014/30/EU	Electromagnetic Compatibility Directive
2014/35/EU	Low Voltage Directive

In addition, terms used in the present document may tangentially be used as they are derived from other standards such as:

Standard	Description
IEC 60034 series	Rotating electrical machines
IEC 61800 series	Adjustable speed electrical power drive systems
IEC 61158 series	Digital data communications for measurement and control – Fieldbus for use in industrial control systems

Finally, the term *zone of operation* may be used in conjunction with the description of specific hazards, and is defined as it is for a *hazard zone* or *danger zone* in the *Machinery Directive* (*2006/42/EC*) and *ISO 12100:2010*.

NOTE: The aforementioned standards may or may not apply to the specific products cited in the present documentation. For more information concerning the individual standards applicable to the products described herein, see the characteristics tables for those product references.

Part I
Modicon M241 Logic Controller Introduction

What Is in This Part?

This part contains the following chapters:

Chapter	Chapter Name	Page
1	M241 General Overview	17
2	M241 Features	43
3	M241 Installation	63

Chapter 1
M241 General Overview

Overview

This chapter provides general information about the M241 Logic Controller system architecture and its components.

What Is in This Chapter?

This chapter contains the following topics:

Topic	Page
M241 Logic Controller Description	18
Maximum Hardware Configuration	23
TMC4 Cartridges	26
TM4 Expansion Modules	27
TM3 Expansion Modules	28
TM2 Expansion Modules	37
Accessories	41

M241 Logic Controller Description

Overview

The M241 Logic Controller has various powerful features and can service a wide range of applications.

Software configuration, programming, and commissioning is accomplished with the SoMachine software described in the SoMachine Programming Guide *(see SoMachine, Programming Guide)* and the M241 Logic Controller Programming Guide.

Programming Languages

The M241 Logic Controller is configured and programmed with the SoMachine software, which supports the following IEC 61131-3 programming languages:

- IL: Instruction List
- ST: Structured Text
- FBD: Function Block Diagram
- SFC: Sequential Function Chart
- LD: Ladder Diagram

SoMachine software can also be used to program these controllers using CFC (Continuous Function Chart) language.

Power Supply

The power supply of the M241 Logic Controller is 24 Vdc *(see page 90)* or 100...240 Vac *(see page 94)*.

Real Time Clock

The M241 Logic Controller includes a Real Time Clock (RTC) system *(see page 44)*.

Run/Stop

The M241 Logic Controller can be operated externally by the following:

- a hardware Run/Stop switch *(see page 57)*
- a Run/Stop *(see page 48)* operation by a dedicated digital input, defined in the software configuration. For more information, refer to Configuration of Digital Inputs *(see Modicon M241 Logic Controller, Programming Guide)*.
- a SoMachine software command

Memory

This table describes the different types of memory:

Memory Type	Size	Used to
RAM	64 Mbytes, of which 8 Mbytes available for the application	execute the application.
Non-volatile	128 Mbytes	save the program and data in case of a power interruption.

Embedded Inputs/Outputs

The following embedded I/O types are available, depending on the controller reference:

- Regular inputs
- Fast inputs associated with counters
- Regular sink/source transistor outputs
- Fast sink/source transistor outputs associated with pulse generators
- Relay outputs

Removable Storage

The M241 Logic Controllers include an embedded SD card slot *(see page 59)*.

The main uses of the SD card are:

- Initializing the controller with a new application
- Updating the controller firmware
- Applying post configuration files to the controller
- Applying recipes
- Receiving data logging files

Embedded Communication Features

The following types of communication ports are available depending on the controller reference:

- CANopen Master *(see page 222)*
- Ethernet *(see page 226)*
- USB Mini-B *(see page 229)*
- Serial Line 1 *(see page 231)*
- Serial Line 2 *(see page 234)*

M241 Logic Controller

Reference	Digital Inputs	Digital Outputs	Communication Ports	Terminal Type	Power supply
TM241C24R *(see page 103)*	6 regular inputs(1) 8 fast inputs (counters)(2)	6 2A relay outputs 4 source fast outputs (pulse generators)(3)	2 serial line ports 1 USB programming port	Removable screw terminal blocks	100...240 Vac
TM241CE24R *(see page 187)*	6 regular inputs(1) 8 fast inputs (counters)(2)	6 2A relay outputs 4 source fast outputs (pulse generators)(3)	2 serial line ports 1 USB programming port 1 Ethernet port	Removable screw terminal blocks	100...240 Vac
TM241CEC24R *(see page 115)*	6 regular inputs(1) 8 fast inputs (counters)(2)	6 2A relay outputs 4 source fast outputs (pulse generators)(3)	2 serial line ports 1 Ethernet port 1 CANopen master port 1 USB programming port	Removable screw terminal blocks	100...240 Vac
TM241C24T *(see page 121)*	6 regular inputs(1) 8 fast inputs (counters)(2)	Source outputs 6 regular transistor outputs 4 fast outputs (pulse generators)(3)	2 serial line ports 1 USB programming port	Removable screw terminal blocks	24 Vdc
TM241CE24T *(see page 127)*	6 regular inputs(1) 8 fast inputs (counters)(2)	Source outputs 6 regular transistor outputs 4 fast outputs (pulse generators)(3)	2 serial line ports 1 USB programming port 1 Ethernet port	Removable screw terminal blocks	24 Vdc
TM241CEC24T *(see page 133)*	6 regular inputs(1) 8 fast inputs (counters)(2)	Source outputs 6 regular transistor outputs 4 fast outputs (pulse generators)(3)	2 serial line ports 1 USB programming port 1 Ethernet port 1 CANopen master port	Removable screw terminal blocks	24 Vdc
TM241C24U *(see page 139)*	6 regular inputs(1) 8 fast inputs (counters)(2)	Sink outputs 6 regular transistor outputs 4 fast outputs (pulse generators)(3)	2 serial line ports 1 USB programming port	Removable screw terminal blocks	24 Vdc

(1) The regular inputs have a maximum frequency of 1 kHz.
(2) The fast inputs can be used either as regular inputs or as fast inputs for counting or event functions.
(3) The fast transistor outputs can be used either as regular transistor outputs, as reflex outputs for counting function (HSC), or as fast transistor outputs for pulse generator functions (FreqGen / PTO / PWM).

Reference	Digital Inputs	Digital Outputs	Communication Ports	Terminal Type	Power supply
TM241CE24U *(see page 145)*	6 regular inputs(1) 8 fast inputs (counters)(2)	Sink outputs 6 regular transistor outputs 4 fast outputs (pulse generators)(3)	2 serial line ports 1 USB programming port 1 Ethernet port	Removable screw terminal blocks	24 Vdc
TM241CEC24U *(see page 151)*	6 regular inputs(1) 8 fast inputs (counters)(2)	Sink outputs 6 regular transistor outputs 4 fast outputs (pulse generators)(3)	2 serial line ports 1 USB programming port 1 Ethernet port 1 CANopen master port	Removable screw terminal blocks	24 Vdc
TM241C40R *(see page 157)*	16 regular inputs(1) 8 fast inputs (counters)(2)	12 2A relay outputs 4 source fast outputs (pulse generators)(3)	2 serial line ports 1 USB programming port	Removable screw terminal blocks	100...240 Vac
TM241CE40R *(see page 163)*	16 regular inputs(1) 8 fast inputs (counters)(2)	12 2A relay outputs 4 source fast outputs (pulse generators)(3)	2 serial line ports 1 USB programming port 1 Ethernet port	Removable screw terminal blocks	100...240 Vac
TM241C40T *(see page 169)*	16 regular inputs(1) 8 fast inputs (counters)(2)	Source outputs 12 regular transistor outputs 4 fast outputs (pulse generators)(3)	2 serial line ports 1 USB programming port	Removable screw terminal blocks	24 Vdc
TM241CE40T *(see page 175)*	16 regular inputs(1) 8 fast inputs (counters)(2)	Source outputs 12 regular transistor outputs 4 fast outputs (pulse generators)(3)	2 serial line ports 1 USB programming port 1 Ethernet port	Removable screw terminal blocks	24 Vdc

(1) The regular inputs have a maximum frequency of 1 kHz.
(2) The fast inputs can be used either as regular inputs or as fast inputs for counting or event functions.
(3) The fast transistor outputs can be used either as regular transistor outputs, as reflex outputs for counting function (HSC), or as fast transistor outputs for pulse generator functions (FreqGen / PTO / PWM).

Reference	Digital Inputs	Digital Outputs	Communication Ports	Terminal Type	Power supply
TM241C40U *(see page 181)*	16 regular inputs(1) 8 fast inputs (counters)(2)	Sink outputs 12 regular transistor outputs 4 fast outputs (pulse generators)(3)	2 serial line ports 1 USB programming port	Removable screw terminal blocks	24 Vdc
TM241CE40U *(see page 187)*	16 regular inputs(1) 8 fast inputs (counters)(2)	Sink outputs 12 regular transistor outputs 4 fast outputs (pulse generators)(3)	2 serial line ports 1 USB programming port 1 Ethernet port	Removable screw terminal blocks	24 Vdc

(1) The regular inputs have a maximum frequency of 1 kHz.
(2) The fast inputs can be used either as regular inputs or as fast inputs for counting or event functions.
(3) The fast transistor outputs can be used either as regular transistor outputs, as reflex outputs for counting function (HSC), or as fast transistor outputs for pulse generator functions (FreqGen / PTO / PWM).

Delivery Content

The following figure presents the content of the delivery for a M241 Logic Controller:

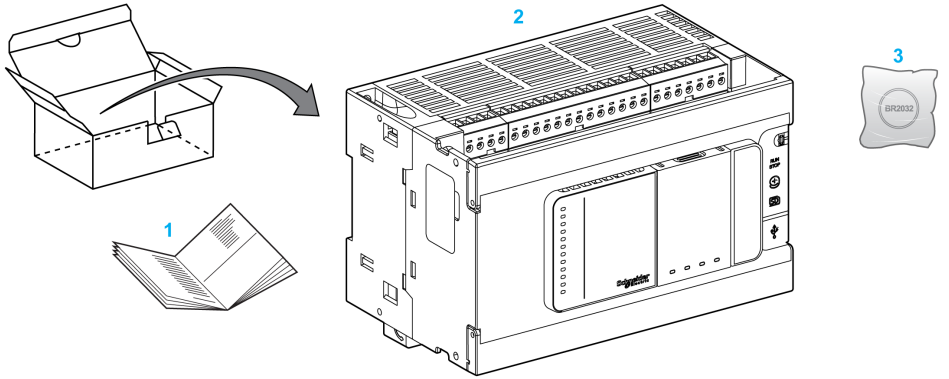

1 M241 Logic Controller Instruction Sheet
2 M241 Logic Controller
3 Lithium carbon monofluoride battery, type Panasonic BR2032.

Maximum Hardware Configuration

Introduction

The M241 Logic Controller is a control system that offers an all-in-one solution with optimized configurations and an expandable architecture.

Local and Remote Configuration Principle

The following figure defines the local and remote configurations:

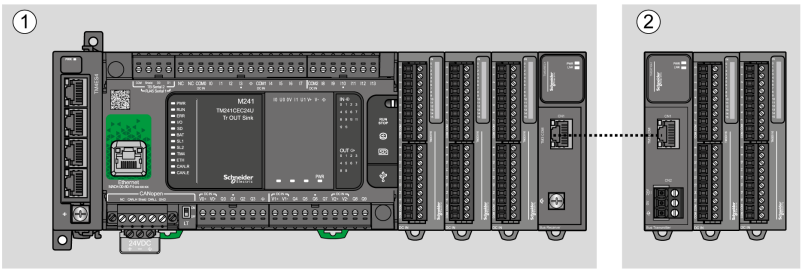

(1) Local configuration
(2) Remote configuration

M241 Logic Controller Local Configuration Architecture

Optimized local configuration and flexibility are provided by the association of:

- TM4 expansion modules
- M241 Logic Controller
- TM3 expansion modules
- TM2 expansion modules

Application requirements determine the architecture of your M241 Logic Controller configuration.

The following figure represents the components of a local configuration:

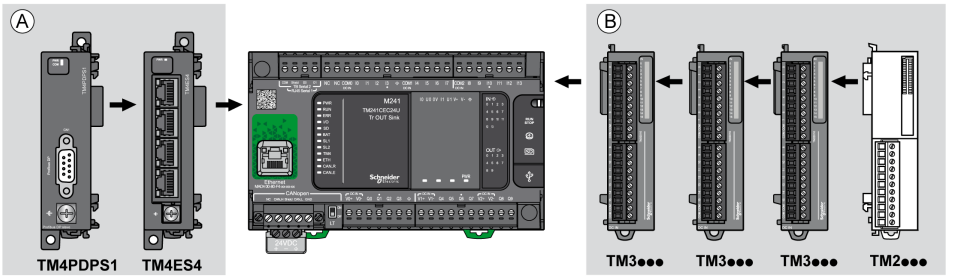

(A) Expansion modules (3 maximum)
(B) Expansion modules (7 maximum)

NOTE: It is prohibited to mount a TM2 module before any TM3 module as indicated in the following figure:

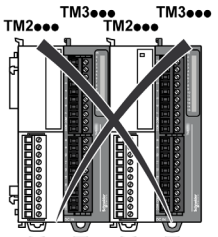

M241 Logic Controller Remote Configuration Architecture

Optimized remote configuration and flexibility are provided by the association of:

- TM4 expansion modules
- M241 Logic Controller
- TM3 expansion modules
- TM3 transmitter and receiver modules

Application requirements determine the architecture of your M241 Logic Controller configuration.

NOTE: You cannot use TM2 modules in configurations that include the TM3 transmitter and receiver modules.

The following figure represents the components of a remote configuration:

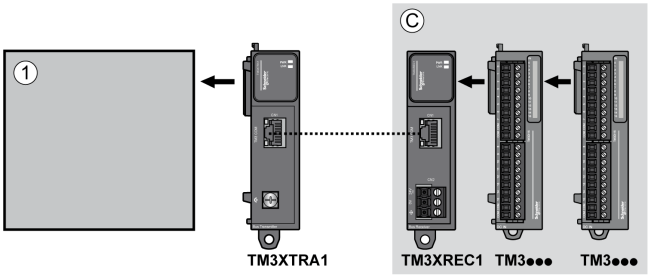

(1) Logic controller and modules
(C) Expansion modules (7 maximum)

Maximum Number of Modules

The following table shows the maximum configuration supported:

References	Maximum	Type of Configuration
TM241••••	7 TM3 / TM2 expansion modules	Local
TM241••••	3 TM4 expansion modules	Local
TM3XREC1	7 TM3 expansion modules	Remote
NOTE: TM3 transmitter and receiver modules are not included in a count of the maximum number of expansion modules.		

NOTE: The configuration with its TM4, TM3, and TM2 expansion modules is validated by SoMachine software in the **Configuration** window.

NOTE: In some environments, the maximum configuration populated by high consummation modules, coupled with the maximum distance allowable between the TM3 transmitter and receiver modules, may present bus communication issues although the SoMachine software allowed for the configuration. In such a case you will need to analyze the consummation of the modules chosen for your configuration, as well as the minimum cable distance required by your application, and possibly seek to optimize your choices.

TMC4 Cartridges

Overview

You can expand the number of I/Os of your Modicon M241 Logic Controller by adding TMC4 cartridges.

For more information, refer to the TMC4 Cartridges Hardware Guide.

TMC4 Standard Cartridges

The following table presents the general-purpose TMC4 cartridges with the corresponding channel type, voltage/current range, and terminal type:

Reference	Channels	Channel Type	Voltage Current	Terminal Type
TMC4AI2	2	Analog inputs (voltage or current)	0...10 Vdc 0...20 mA or 4...20 mA	3.81 mm (0.15 in.) pitch, removable spring terminal block
TMC4TI2	2	Analog temperature inputs	Thermocouple type K, J, R, S, B, E, T, N,C 3 wires RTD type Pt100, Pt1000, Ni100, Ni1000	3.81 mm (0.15 in.) pitch, removable spring terminal block
TMC4AQ2	2	Analog outputs (voltage or current)	0...10 Vdc 4...20 mA	3.81 mm (0.15 in.) pitch, removable spring terminal block

TMC4 Application Cartridges

The following table presents the applicative TMC4 cartridges with the corresponding channel type, voltage/current range, and terminal type:

Reference	Channels	Channel Type	Voltage Current	Terminal Type
TMC4HOIS01	2	Analog inputs (voltage or current)	0...10 Vdc 0...20 mA or 4...20 mA	3.81 mm (0.15 in.) pitch, removable spring terminal block
TMC4PACK01	2	Analog inputs (voltage or current)	0...10 Vdc 0...20 mA or 4...20 mA	3.81 mm (0.15 in.) pitch, removable spring terminal block

TM4 Expansion Modules

Introduction

The range of TM4 expansion modules includes communication modules.

For more information, refer to the TM4 Expansion Modules Hardware Guide.

TM4 Expansion Modules

The following table shows the TM4 expansion module features:

Module reference	Type	Terminal type
TM4ES4	Ethernet communication	4 RJ45 connectors 1 screw for functional ground connection
TM4PDPS1	PROFIBUS DP slave communication	1 SUB-D 9 pins female connector 1 screw for functional ground connection
NOTE: The TM4ES4 module has two applications: expansion or standalone. For more information, refer to TM4 Compatibility.		

TM3 Expansion Modules

Introduction

The range of TM3 expansion modules includes:

- Digital modules, classified as follows:
  - Input modules *(see page 28)*
  - Output modules *(see page 29)*
  - Mixed input/output modules *(see page 31)*
- Analog modules, classified as follows:
  - Input modules *(see page 32)*
  - Output modules *(see page 33)*
  - Mixed input/output modules *(see page 34)*
- Expert modules *(see page 34)*
- Safety modules *(see page 35)*
- Transmitter and Receiver modules *(see page 36)*

For more information, refer to the following documents:

- TM3 Digital I/O Modules Hardware Guide
- TM3 Analog I/O Modules Hardware Guide
- TM3 Expert I/O Modules Hardware Guide
- TM3 Safety Modules Hardware Guide
- TM3 Transmitter and Receiver Modules Hardware Guide

TM3 Digital Input Modules

The following table shows the TM3 digital input expansion modules, with corresponding channel type, nominal voltage/current, and terminal type:

Reference	Channels	Channel Type	Voltage Current	Terminal Type / Pitch
TM3DI8A	8	Regular inputs	120 Vac 7.5 mA	Removable screw terminal block / 5.08 mm
TM3DI8	8	Regular inputs	24 Vdc 7 mA	Removable screw terminal block / 5.08 mm
TM3DI8G	8	Regular inputs	24 Vdc 7 mA	Removable spring terminal block / 5.08 mm
TM3DI16	16	Regular inputs	24 Vdc 7 mA	Removable screw terminal blocks / 3.81 mm

Reference	Channels	Channel Type	Voltage Current	Terminal Type / Pitch
TM3DI16G	16	Regular inputs	24 Vdc 7 mA	Removable spring terminal blocks / 3.81 mm
TM3DI16K	16	Regular inputs	24 Vdc 5 mA	HE10 (MIL 20) connector
TM3DI32K	32	Regular inputs	24 Vdc 5 mA	HE10 (MIL 20) connector

TM3 Digital Output Modules

The following table shows the TM3 digital output expansion modules, with corresponding channel type, nominal voltage/current, and terminal type:

Reference	Channels	Channel Type	Voltage Current	Terminal Type / Pitch
TM3DQ8R	8	Relay outputs	24 Vdc / 240 Vac 7 A maximum per common line / 2 A maximum per output	Removable screw terminal block / 5.08 mm
TM3DQ8RG	8	Relay outputs	24 Vdc / 240 Vac 7 A maximum per common line / 2 A maximum per output	Removable spring terminal block / 5.08 mm
TM3DQ8T	8	Regular transistor outputs (source)	24 Vdc 4 A maximum per common line/0.5 A maximum per output	Removable screw terminal block / 5.08 mm
TM3DQ8TG	8	Regular transistor outputs (source)	24 Vdc 4 A maximum per common line/0.5 A maximum per output	Removable spring terminal block / 5.08 mm
TM3DQ8U	8	Regular transistor outputs (sink)	24 Vdc 4 A maximum per common line/0.5 A maximum per output	Removable screw terminal block / 5.08 mm
TM3DQ8UG	8	Regular transistor outputs (sink)	24 Vdc 4 A maximum per common line/0.5 A maximum per output	Removable spring terminal block / 5.08 mm
TM3DQ16R	16	Relay outputs	24 Vdc / 240 Vac 8 A maximum per common line / 2 A maximum per output	Removable screw terminal blocks / 3.81 mm

Reference	Channels	Channel Type	Voltage Current	Terminal Type / Pitch
TM3DQ16RG	16	Relay outputs	24 Vdc / 240 Vac 8 A maximum per common line / 2 A maximum per output	Removable spring terminal blocks / 3.81 mm
TM3DQ16T	16	Regular transistor outputs (source)	24 Vdc 8 A maximum per common line / 0.5 A maximum per output	Removable screw terminal blocks / 3.81 mm
TM3DQ16TG	16	Regular transistor outputs (source)	24 Vdc 8 A maximum per common line / 0.5 A maximum per output	Removable spring terminal blocks / 3.81 mm
TM3DQ16U	16	Regular transistor outputs (sink)	24 Vdc 8 A maximum per common line / 0.5 A maximum per output	Removable screw terminal blocks / 3.81 mm
TM3DQ16UG	16	Regular transistor outputs (sink)	24 Vdc 8 A maximum per common line / 0.5 A maximum per output	Removable spring terminal blocks / 3.81 mm
TM3DQ16TK	16	Regular transistor outputs (source)	24 Vdc 2 A maximum per common line / 0.1 A maximum per output	HE10 (MIL 20) connector
TM3DQ16UK	16	Regular transistor outputs (sink)	24 Vdc 2 A maximum per common line / 0.1 A maximum per output	HE10 (MIL 20) connector
TM3DQ32TK	32	Regular transistor outputs (source)	24 Vdc 2 A maximum per common line / 0.1 A maximum per output	HE10 (MIL 20) connectors
TM3DQ32UK	32	Regular transistor outputs (sink)	24 Vdc 2 A maximum per common line / 0.1 A maximum per output	HE10 (MIL 20) connectors

TM3 Digital Mixed Input/Output Modules

This following table shows the TM3 mixed I/O modules, with corresponding channel type, nominal voltage/current, and terminal type:

Reference	Channels	Channel Type	Voltage Current	Terminal Type / Pitch
TM3DM8R	4	Regular inputs	24 Vdc 7 mA	Removable screw terminal block / 5.08 mm
	4	Relay outputs	24 Vdc / 240 Vac 7 A maximum per common line / 2 A maximum per output	
TM3DM8RG	4	Regular inputs	24 Vdc 7 mA	Removable spring terminal block /5.08 mm
	4	Relay outputs	24 Vdc / 240 Vac 7 A maximum per common line / 2 A maximum per output	
TM3DM24R	16	Regular inputs	24 Vdc 7 mA	Removable screw terminal blocks / 3.81 mm
	8	Relay outputs	24 Vdc / 240 Vac 7 A maximum per common line / 2 A maximum per output	
TM3DM24RG	16	Regular inputs	24 Vdc 7 mA	Removable spring terminal blocks / 3.81 mm
	8	Relay outputs	24 Vdc / 240 Vac 7 A maximum per common line / 2 A maximum per output	

TM3 Analog Input Modules

The following table shows the TM3 analog input expansion modules, with corresponding resolution, channel type, nominal voltage/current, and terminal type:

Reference	Resolution	Channels	Channel Type	Mode	Terminal Type / Pitch
TM3AI2H	16 bit, or 15 bit + sign	2	inputs	0...10 Vdc -10…+10 Vdc 0...20 mA 4...20 mA	Removable screw terminal block / 5.08 mm
TM3AI2HG	16 bit, or 15 bit + sign	2	inputs	0...10 Vdc -10…+10 Vdc 0...20 mA 4...20 mA	Removable spring terminal block / 5.08 mm
TM3AI4	12 bit, or 11 bit + sign	4	inputs	0...10 Vdc -10…+10 Vdc 0...20 mA 4...20 mA	Removable screw terminal block / 3.81 mm
TM3AI4G	12 bit, or 11 bit + sign	4	inputs	0...10 Vdc -10…+10 Vdc 0...20 mA 4...20 mA	Removable spring terminal blocks / 3.81 mm
TM3AI8	12 bit, or 11 bit + sign	8	inputs	0...10 Vdc -10…+10 Vdc 0...20 mA 4...20 mA 0...20 mA extended 4...20 mA extended	Removable screw terminal block / 3.81 mm
TM3AI8G	12 bit, or 11 bit + sign	8	inputs	0...10 Vdc -10…+10 Vdc 0...20 mA 4...20 mA 0...20 mA extended 4...20 mA extended	Removable spring terminal blocks / 3.81 mm
TM3TI4	16 bit, or 15 bit + sign	4	inputs	0...10 Vdc -10…+10 Vdc 0...20 mA 4...20 mA Thermocouple PT100/1000 NI100/1000	Removable screw terminal block / 3.81 mm

Reference	Resolution	Channels	Channel Type	Mode	Terminal Type / Pitch
TM3TI4G	16 bit, or 15 bit + sign	4	inputs	0...10 Vdc -10…+10 Vdc 0...20 mA 4...20 mA Thermocouple PT100/1000 NI100/1000	Removable spring terminal blocks / 3.81 mm
TM3TI4D	16 bit, or 15 bit + sign	4	inputs	Thermocouple	Removable screw terminal block / 3.81 mm
TM3TI4DG	16 bit, or 15 bit + sign	4	inputs	Thermocouple	Removable spring terminal blocks / 3.81 mm
TM3TI8T	16 bit, or 15 bit + sign	8	inputs	Thermocouple NTC/PTC Ohmmeter	Removable screw terminal block / 3.81 mm
TM3TI8TG	16 bit, or 15 bit + sign	8	inputs	Thermocouple NTC/PTC Ohmmeter	Removable spring terminal blocks / 3.81 mm

TM3 Analog Output Modules

The following table shows the TM3 analog output modules, with corresponding resolution, channel type, nominal voltage/current, and terminal type:

Reference	Resolution	Channels	Channel Type	Mode	Terminal Type / Pitch
TM3AQ2	12 bit, or 11 bit + sign	2	outputs	0...10 Vdc -10…+10 Vdc 0...20 mA 4...20 mA	Removable screw terminal block / 5.08 mm
TM3AQ2G	12 bit, or 11 bit + sign	2	outputs	0...10 Vdc -10…+10 Vdc 0...20 mA 4...20 mA	Removable spring terminal block / 5.08 mm
TM3AQ4	12 bit, or 11 bit + sign	4	outputs	0...10 Vdc -10…+10 Vdc 0...20 mA 4...20 mA	Removable screw terminal block / 5.08 mm
TM3AQ4G	12 bit, or 11 bit + sign	4	outputs	0...10 Vdc -10…+10 Vdc 0...20 mA 4...20 mA	Removable spring terminal block / 5.08 mm

TM3 Analog Mixed Input/Output Modules

This following table shows the TM3 analog mixed I/O modules, with corresponding resolution, channel type, nominal voltage/current, and terminal type:

Reference	Resolution	Channels	Channel Type	Mode	Terminal Type / Pitch
TM3AM6	12 bit, or 11 bit + sign	4	inputs	0...10 Vdc -10...+10 Vdc 0...20 mA 4...20 mA	Removable screw terminal block / 3.81 mm
		2	outputs		
TM3AM6G	12 bit, or 11 bit + sign	4	inputs	0...10 Vdc -10...+10 Vdc 0...20 mA 4...20 mA	Removable spring terminal block / 3.81 mm
		2	outputs		
TM3TM3	16 bit, or 15 bit + sign	2	inputs	0...10 Vdc -10...+10 Vdc 0...20 mA 4...20 mA Thermocouple PT100/1000 NI100/1000	Removable screw terminal block / 5.08 mm
	12 bit, or 11 bit + sign	1	outputs	0...10 Vdc -10...+10 Vdc 0...20 mA 4...20 mA	
TM3TM3G	16 bit, or 15 bit + sign	2	inputs	0...10 Vdc -10...+10 Vdc 0...20 mA 4...20 mA Thermocouple PT100/1000 NI100/1000	Removable spring terminal block / 5.08 mm
	12 bit, or 11 bit + sign	1	outputs	0...10 Vdc -10...+10 Vdc 0...20 mA 4...20 mA	

TM3 Expert Module

The following table shows the TM3 expert expansion module, with corresponding terminal type:

Reference	Description	Terminal Type / Pitch
TM3XTYS4	TeSys module	4 front connectors RJ-45 1 power supply connector / 5.08 mm

TM3 Safety Modules

This table contains the TM3 safety modules, with the corresponding channel type, nominal voltage/current, and terminal type:

Reference	Function Category	Channels	Channel type	Voltage Current	Terminal type
TM3SAC5R	1 function, up to category 3	1 or 2 (1)	Safety input	24 Vdc 100 mA maximum	3.81 mm (0.15 in.) and 5.08 mm (0.20 in.), removable screw terminal block
		Start (2)	Input		
		3 in parallel	Relay outputs Normally open	24 Vdc / 230 Vac 6 A maximum per output	
TM3SAC5RG	1 function, up to category 3	1 or 2 (1)	Safety input	24 Vdc 100 mA maximum	3.81 mm (0.15 in.) and 5.08 mm (0.20 in.), removable spring terminal block
		Start (2)	Input		
		3 in parallel	Relay outputs Normally open	24 Vdc / 230 Vac 6 A maximum per output	
TM3SAF5R	1 function, up to category 4	2 (1)	Safety inputs	24 Vdc 100 mA maximum	3.81 mm (0.15 in.) and 5.08 mm (0.20 in.), removable screw terminal block
		Start	Input		
		3 in parallel	Relay outputs Normally open	24 Vdc / 230 Vac 6 A maximum per output	
TM3SAF5RG	1 function, up to category 4	2 (1)	Safety inputs	24 Vdc 100 mA maximum	3.81 mm (0.15 in.) and 5.08 mm (0.20 in.), removable spring terminal block
		Start	Input		
		3 in parallel	Relay outputs Normally open	24 Vdc / 230 Vac 6 A maximum per output	
TM3SAFL5R	2 functions, up to category 3	2 (1)	Safety inputs	24 Vdc 100 mA maximum	3.81 mm (0.15 in.) and 5.08 mm (0.20 in.), removable screw terminal block
		Start	Input		
		3 in parallel	Relay outputs Normally open	24 Vdc / 230 Vac 6 A maximum per output	
TM3SAFL5RG	2 functions, up to category 3	2 (1)	Safety inputs	24 Vdc 100 mA maximum	3.81 mm (0.15 in.) and 5.08 mm (0.20 in.), removable spring terminal block
		Start	Input		
		3 in parallel	Relay outputs Normally open	24 Vdc / 230 Vac 6 A maximum per output	

(1) Depending on external wiring
(2) Non-monitored start

Reference	Function Category	Channels	Channel type	Voltage Current	Terminal type
TM3SAK6R	3 functions, up to category 4	1 or 2 (1)	Safety inputs	24 Vdc 100 mA maximum	3.81 mm (0.15 in.) and 5.08 mm (0.20 in.), removable screw terminal block
		Start	Input		
		3 in parallel	Relay outputs Normally open	24 Vdc / 230 Vac 6 A maximum per output	
TM3SAK6RG	3 functions, up to category 4	1 or 2 (1)	Safety inputs	24 Vdc 100 mA maximum	3.81 mm (0.15 in.) and 5.08 mm (0.20 in.), removable spring terminal block
		Start	Input		
		3 in parallel	Relay outputs Normally open	24 Vdc / 230 Vac 6 A maximum per output	
(1) Depending on external wiring (2) Non-monitored start					

TM3 Transmitter and Receiver Modules

The following table shows the TM3 transmitter and receiver expansion modules:

Reference	Description	Terminal Type / Pitch
TM3XTRA1	Data transmitter module for remote I/O	1 front connector RJ-45 1 screw for functional ground connection
TM3XREC1	Data receiver module for remote I/O	1 front connector RJ-45 Power supply connector / 5.08 mm

TM2 Expansion Modules

Overview

You can expand the number of I/Os of your M241 Logic Controller by adding TM2 I/O expansion modules.

The following types of electronic modules are supported:
- TM2 digital I/O expansion modules
- TM2 analog I/O expansion modules

For more information, refer to the following documents:
- TM2 Digital I/O Expansion Modules Hardware Guide
- TM2 Analog I/O Expansion Modules Hardware Guide

NOTE: TM2 modules can only be used in the local configuration, and only if there is no TM3 transmitter and receiver modules present in the configuration.

NOTE: It is prohibited to mount a TM2 module before any TM3 module. The TM2 modules must be mounted and configured at the end of the local configuration.

TM2 Digital Input Expansion Modules

The following table shows the compatible TM2 digital input expansion modules with the corresponding channel type, nominal voltage/current, and terminal type:

Reference	Channels	Channel Type	Voltage Current	Terminal Type
TM2DAI8DT	8	Regular inputs	120 Vac 7.5 mA	Removable screw terminal block
TM2DDI8DT	8	Regular inputs	24 Vdc 7 mA	Removable screw terminal block
TM2DDI16DT	16	Regular inputs	24 Vdc 7 mA	Removable screw terminal block
TM2DDI16DK	16	Regular inputs	24 Vdc 5 mA	HE10 (MIL 20) connector
TM2DDI32DK	32	Regular inputs	24 Vdc 5 mA	HE10 (MIL 20) connector

TM2 Digital Output Expansion Modules

The following table shows the compatible TM2 digital output expansion modules with the corresponding channel type, nominal voltage/current, and terminal type:

Reference	Channels	Channel type	Voltage Current	Terminal type
TM2DRA8RT	8	Relay outputs	30 Vdc / 240 Vac 2 A max	Removable screw terminal block
TM2DRA16RT	16	Relay outputs	30 Vdc / 240 Vac 2 A max	Removable screw terminal block
TM2DDO8UT	8	Regular transistor outputs (sink)	24 Vdc 0.3 A max per output	Removable screw terminal block
TM2DDO8TT	8	Regular transistor outputs (source)	24 Vdc 0.5 A max per output	Removable screw terminal block
TM2DDO16UK	16	Regular transistor outputs (sink)	24 Vdc 0.1 A max per output	HE10 (MIL 20) connector
TM2DDO16TK	16	Regular transistor outputs (source)	24 Vdc 0.4 A max per output	HE10 (MIL 20) connector
TM2DDO32UK	32	Regular transistor outputs (sink)	24 Vdc 0.1 A max per output	HE10 (MIL 20) connector
TM2DDO32TK	32	Regular transistor outputs (source)	24 Vdc 0.4 A max per output	HE10 (MIL 20) connector

TM2 Digital Mixed Input/Output Expansion Modules

The following table shows the compatible TM2 digital mixed I/O expansion modules with the corresponding channel type, nominal voltage/current, and terminal type:

Reference	Channels	Channel type	Voltage Current	Terminal type
TM2DMM8DRT	4	Regular inputs	24 Vdc 7 mA	Removable screw terminal block
	4	Relay outputs	24 Vdc / 240 Vac 7 A maximum per common line / 2 A maximum per output	
TM2DMM24DRF	16	Regular inputs	24 Vdc 7 mA	Non-removable spring terminal block
	8	Relay outputs	24 Vdc / 240 Vac 7 A maximum per common line / 2 A maximum per output	

TM2 Analog Input Expansion Modules

The following table shows the compatible TM2 analog input expansion modules with the corresponding channel type, nominal voltage/current, and terminal type:

Reference	Channels	Channel type	Voltage Current	Terminal Type
TM2AMI2HT	2	High-level inputs	0...10 Vdc 4...20 mA	Removable screw terminal block
TM2AMI2LT	2	Low-level inputs	Thermocouple type J,K,T	Removable screw terminal block
TM2AMI4LT	4	Analog inputs	0...10 Vdc 0...20 mA PT100/1000 Ni100/1000	Removable screw terminal block
TM2AMI8HT	8	Analog inputs	0...20 mA 0...10 Vdc	Removable screw terminal block
TM2ARI8HT	8	Analog inputs	NTC / PTC	Removable screw terminal block
TM2ARI8LRJ	8	Analog inputs	PT100/1000	RJ11 connector
TM2ARI8LT	8	Analog inputs	PT100/1000	Removable screw terminal block

TM2 Analog Output Expansion Modules

The following table shows the compatible TM2 analog output expansion modules with the corresponding channel type, nominal voltage/current, and terminal type:

Reference	Channels	Channel type	Voltage Current	Terminal Type
TM2AMO1HT	1	Analog outputs	0...10 Vdc 4...20 mA	Removable screw terminal block
TM2AVO2HT	2	Analog outputs	+/- 10 Vdc	Removable screw terminal block

TM2 Analog Mixed Input/Output Expansion Modules

The following table shows the compatible TM2 analog mixed I/O expansion modules with the corresponding channel type, nominal voltage/current, and terminal type:

Reference	Channels	Channel type	Voltage Current	Terminal Type
TM2AMM3HT	2	Analog inputs	0...10 Vdc 4...20 mA	Removable screw terminal block
	1	Analog outputs	0...10 Vdc 4...20 mA	
TM2AMM6HT	4	Analog inputs	0...10 Vdc 4...20 mA	Removable screw terminal block
	2	Analog outputs	0...10 Vdc 4...20 mA	
TM2ALM3LT	2	Low-level inputs	Thermo J,K,T, PT100	Removable screw terminal block
	1	Analog outputs	0...10 Vdc 4...20 mA	

Accessories

Overview

This section describes the accessories and cables.

Accessories

Reference	Description	Use	Quantity
TMASD1	SD Card *(see page 59)*	Use to update the controller firmware, initialize a controller with a new application or clone a controller, manage user files.	1
TMAT2CSET	Set of 5 removable screw terminal block	Connects M241 Logic Controller embedded I/Os.	1
TMAT2PSET	Set of 5 removable screw terminal block	Connects 24 Vdc power supply.	1
AB1AB8P35	End brackets	Help secure the logic controller or receiver module and their expansion modules on a top hat section rail (DIN rail).	1
TM2XMTGB	Grounding Bar	Connects the cable shield and the module to the functional ground.	1
TM200RSRCEMC	Shielding take-up clip	Mounts and connects the ground to the cable shielding.	25 pack

Cables

Reference	Description	Details	Length
TCSXCNAMUM3P	Terminal port/USB port cordset	From the USB mini-B port on the M241 Logic Controller to USB port on the PC terminal.	3 m (10 ft)
BMXXCAUSBH018	Terminal port/USB port cordset	From the USB mini-B port on the M241 Logic Controller to USB port on the PC terminal. **NOTE:** Grounded and shielded, this USB cable is suitable for long duration connections.	1.8 m (5.9 ft)
490NTW000••	Ethernet shielded cable for DTE connections	Standard cable, equipped with RJ45 connectors at each end for DTE. CE compliant	2,5,12,40, or 80 m (6.56,16.4, 39.37, 131.23, or 262.47 ft)
490NTW000••U		Standard cable, equipped with RJ45 connectors at each end for DTE. UL compliant	2,5,12,40, or 80 m (6.56,16.4, 39.37, 131.23, or 262.47 ft)
TCSECE3M3M••S4		Cable for harsh environment,, equipped with RJ45 connectors at each end. CE compliant	1, 2, 3, 5, or 10 m (3.28, 6.56, 9.84, 16.4, 32.81 ft)
TCSECU3M3M••S4		Cable for harsh environment, equipped with RJ45 connectors at each end. UL compliant	1, 2, 3, 5, or 10 m (3.28, 6.56, 9.84, 16.4, 32.81 ft)

Chapter 2
M241 Features

Overview

This chapter describes the Modicon M241 Logic Controller features.

What Is in This Chapter?

This chapter contains the following topics:

Topic	Page
Real Time Clock (RTC)	44
Input Management	48
Output Management	52
Run/Stop	57
SD Card	59

Real Time Clock (RTC)

Overview

The M241 Logic Controller includes an RTC to provide system date and time information, and to support related functions requiring a real-time clock. To continue keeping time when power is off, a non-rechargeable battery is required (see reference below). A battery LED on the front panel of the controller indicates if the battery is depleted or absent.

This table shows how RTC drift is managed:

RTC Characteristics	Description
RTC drift	Less than 60 seconds per month without any user calibration at 25 °C (77 °F)

Battery

The controller has one battery.

In the event of a power interruption, the backup battery maintains the RTC for the controller.

This table shows the characteristics of the battery:

Characteristics	Description
Use	In the event of a transient power outage, the battery powers the RTC.
Backup life	At least 2 years at 25 °C maximum (77 °F). At higher temperatures, the time is reduced.
Battery monitoring	Yes
Replaceable	Yes
Controller battery type	Lithium carbon monofluoride, type Panasonic BR2032

Installing and Replacing the Battery

While lithium batteries are preferred due to their slow discharge and long life, they can present hazards to personnel, equipment and the environment and must be handled properly.

⚠ DANGER

EXPLOSION, FIRE, OR CHEMICAL BURNS

- Replace with identical battery type.
- Follow all the instructions of the battery manufacturer.
- Remove all replaceable batteries before discarding unit.
- Recycle or properly dispose of used batteries.
- Protect battery from any potential short-circuit.
- Do not recharge, disassemble, heat above 100 °C (212 °F), or incinerate.
- Use your hands or insulated tools to remove or replace the battery.
- Maintain proper polarity when inserting and connecting a new battery.

Failure to follow these instructions will result in death or serious injury.

To install or replace the battery, follow these steps:

Step	Action
1	Remove power from your controller.
2	Use an insulated screw-driver to pull out the battery holder. 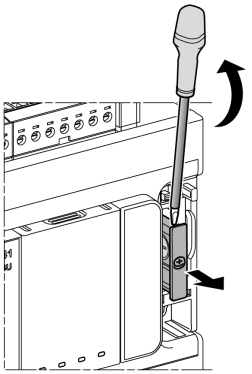

Step	Action
3	Slide out the battery holder of the controller. 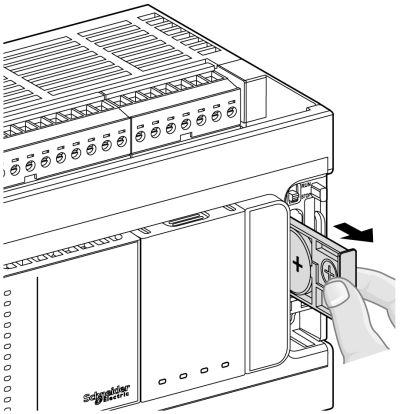
4	Remove the battery from the battery holder. 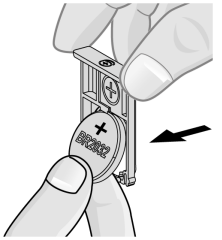
5	Insert the new battery into the battery holder in accordance with the polarity markings on the battery. 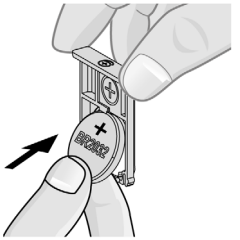

Step	Action
6	Replace the battery holder on the controller and verify that the latch clicks into place. 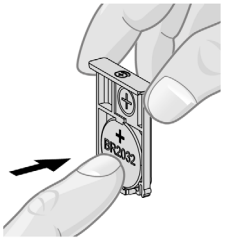
7	Slide in the battery holder of the controller. 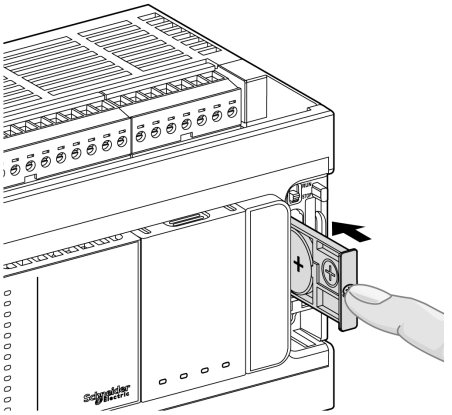
8	Power up your M241 Logic Controller.
9	Set the internal clock. For further details on the internal clock, refer to Programming Guide *(see Modicon M241 Logic Controller, Programming Guide)*.

NOTE: Replacement of the battery in the controllers other than with the type specified in this documentation may present a risk of fire or explosion.

⚠ WARNING
IMPROPER BATTERY CAN PROVOKE FIRE OR EXPLOSION
Replace battery only with identical type: Panasonic Type BR2032.
Failure to follow these instructions can result in death, serious injury, or equipment damage.

Input Management

Overview

The M241 Logic Controller features digital inputs, including 8 fast inputs.

The following functions are configurable:

- Filters (depends on the function associated with the input).
- All inputs can be used for the Run/Stop function.
- 8 fast inputs can be either latched or used for events (rising edge, falling edge, or both) and thus be linked to an external task.

NOTE: All inputs can be used as regular inputs.

Input Management Functions Availability

Embedded digital inputs can be configured as functions (Run/Stop, events, HSC).

Inputs not configured as functions are used as regular inputs.

The following table shows the possible usage of the M241 Logic Controller digital inputs:

Function	Input Function				HSC
	None	RUN/STOP	Latch	Event	
Filter type	Integrator	Integrator	Bounce	Bounce	
Fast inputs[1]	I0...I7				
Regular inputs	I8...I13[2] I8...I23[3]	I8...I13[2] I8...I23[3]	–	–	I8...I13[2 4] I8...I15[3 4]

– No
1 Can also be used as regular inputs
2 For M241 with 24 I/O channels
3 For M241 with 40 I/O channels
4 Limited to 1 kHz

Integrator Filter Principle

The integrator filter is designed to reduce the effect of noise. Setting a filter value allows the logic controller to ignore some sudden changes of input levels caused by noise.

The following timing diagram illustrates the integrator filter effects for a value of 4 ms:

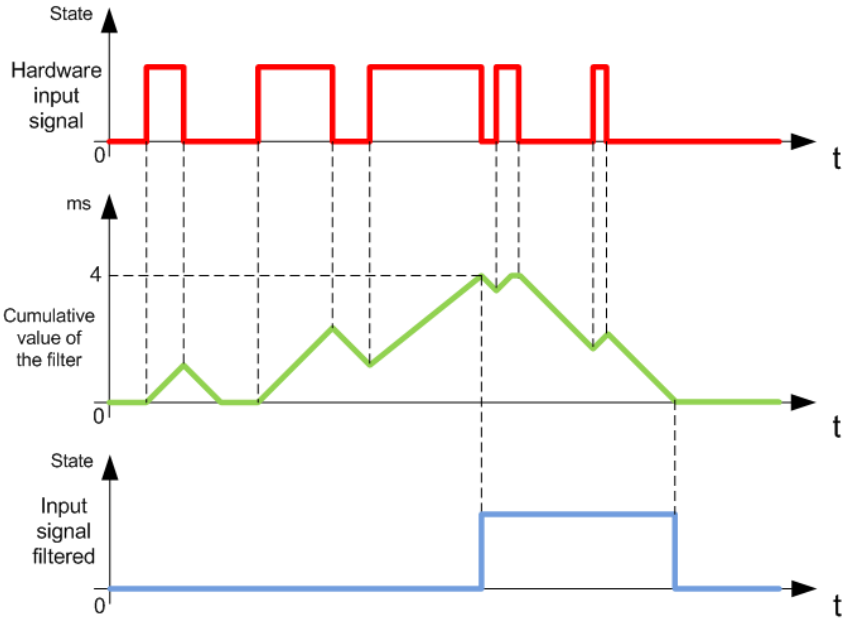

NOTE: The value selected for the filter's time parameter specifies the cumulative time in ms that must elapse before the input can be 1.

Bounce Filter Principle

The bounce filter is designed to reduce the bouncing effect at the inputs. Setting a bounce filter value allows the controller to ignore some sudden changes of input levels caused by electrical noise. The bounce filter is only available on the fast inputs.

The following timing diagram illustrates the anti-bounce filter effects:

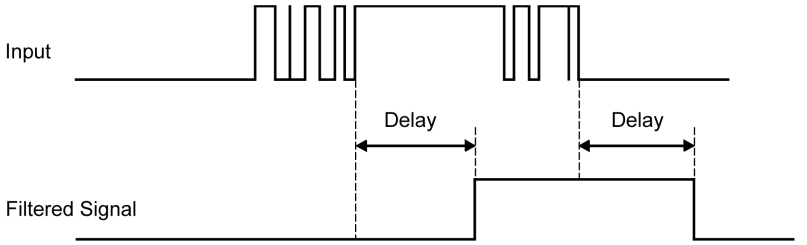

Bounce Filter Availability

The bounce filter can be used on a fast input when:

- Using a latch or event
- HSC is enabled

Latching

Latching is a function that can be assigned to the M241 Logic Controller fast inputs. This function is used to memorize (or latch) any pulse with a duration that is less than the M241 Logic Controller scan time. When a pulse is shorter than one scan, the controller latches the pulse, which is then updated in the next scan. This latching mechanism only recognizes rising edges. Falling edges cannot be latched. Assigning inputs to be latched is done in the **I/O Configuration** tab in SoMachine.

The following timing diagram illustrates the latching effects:

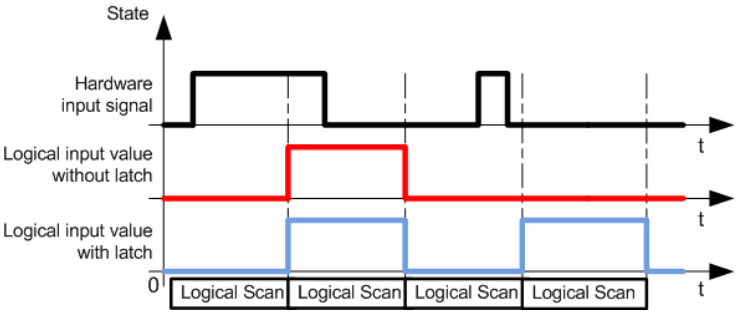

Event

An input configured for Event can be associated with an External Task.

Run/Stop

The Run/Stop function is used to start or stop an application program using an input. In addition to the embedded Run/Stop switch, it is allowed to configure one (and only one) input as an additional Run/Stop command.

For more information, refer to the Run/Stop *(see page 57)*.

⚠ WARNING

UNINTENDED MACHINE OR PROCESS START-UP

- Verify the state of security of your machine or process environment before applying power to the Run/Stop input.
- Use the Run/Stop input to help prevent the unintentional start-up from a remote location.

Failure to follow these instructions can result in death, serious injury, or equipment damage.

⚠ WARNING

UNINTENDED EQUIPMENT OPERATION

Use the sensor and actuator power supply only for supplying power to sensors or actuators connected to the module.

Failure to follow these instructions can result in death, serious injury, or equipment damage.

Output Management

Introduction

The M241 Logic Controller features both regular and fast transistor outputs (PTO / PWM / FreqGen).

The following output functions are configurable on the transistor outputs:

- Alarm output
- HSC (reflex features on HSC threshold)
- PTO
- PWM
- FreqGen

NOTE: All outputs can be used as regular outputs.

Output Management Availability

The following table shows the possible usage of the M241 Logic Controller digital outputs on references with transistor outputs:

Reference		Function		Alarm Output	HSC	FreqGen	PWM	PTO
TM241C•40T / TM241C•40U	TM241C••24T / TM241C••24U	Fast output	Q0	X	Reflex output 0 or 1	Output A	Output A	Output A or B
			Q1	X	Reflex output 0 or 1	Output A	Output A	Output A or B
			Q2	X	Reflex output 0 or 1	Output A	Output A	Output A or B
			Q3	X	Reflex output 0 or 1	Output A	Output A	Output A or B
		Regular output	Q4	X	Reflex output 0 or 1	Output A	Output A	Output A or B
			Q5	X	Reflex output 0 or 1	Output A	Output A	Output A or B
			Q6	X	Reflex output 0 or 1	Output A	Output A	Output A or B
			Q7	X	Reflex output 0 or 1	Output A	Output A	Output A or B
			Q8	X	–	–	–	–
			Q9	X	–	–	–	–
			Q10	X	–	–	–	–
			Q11	X	–	–	–	–
			Q12	X	–	–	–	–
			Q13	X	–	–	–	–
			Q14	X	–	–	–	–
			Q15	X	–	–	–	–

The following table shows the possible usage of the M241 Logic Controller on references with relay outputs:

Reference		Function		Alarm Output	HSC	FreqGen	PWM	PTO
TM241C•40R	TM241C••24R	Fast output	Q0	X	Reflex output 0 or 1	Output A	Output A	Output A or B
			Q1	X	Reflex output 0 or 1	Output A	Output A	Output A or B
			Q2	X	Reflex output 0 or 1	Output A	Output A	Output A or B
			Q3	X	Reflex output 0 or 1	Output A	Output A	Output A or B
		Regular output	Q4	X	Reflex output 0 or 1	–	–	–
			Q5	X	Reflex output 0 or 1	–	–	–
			Q6	X	Reflex output 0 or 1	–	–	–
			Q7	X	Reflex output 0 or 1	–	–	–
			Q8	X	–	–	–	–
			Q9	X	–	–	–	–
			Q10	X	–	–	–	–
			Q11	X	–	–	–	–
			Q12	X	–	–	–	–
			Q13	X	–	–	–	–
			Q14	X	–	–	–	–
			Q15	X	–	–	–	–

Fallback Modes (Behavior for Outputs in Stop)

When the controller enters the STOPPED or one of the exception states for any reason, the local (embedded and expansion) outputs are set to **Default Value** defined in the application.

In case of PTO outputs, the fallback values are forced to 0 logic (0 Vdc) and these values cannot be modified.

Short-circuit or Over-current on Source Transistor Outputs

Outputs are clustered in packs of 4 outputs maximum (less when the total number of outputs of the controller is not a multiple of 4):

- **Q0**...**Q3**
- **Q4**...**Q7**
- **Q8**...**Q11**
- **Q12**...**Q15**

When a short-circuit or overload is detected, the cluster of 4 outputs is set to 0. An automatic rearming is done periodically (about 1 s).

The following table describes the actions taken on short-circuits or overload of transistor outputs from Q0 to Q3:

If...	then...
If you have short-circuit at 0 V on transistor outputs	Transistor outputs automatically go into over-current protection or thermal protection mode. For more information, refer to transistor output wiring diagrams.
If you have short-circuit at 24 V on transistor outputs	Transistor outputs automatically go into over-current protection mode. For more information, refer to transistor output wiring diagrams.

The following table describes the actions taken on short-circuits or overload of transistor outputs from Q4 to Q15:

If...	then...
If you have short-circuit at 0 V on transistor outputs	Transistor outputs automatically go into thermal protection mode. For more information, refer to transistor output wiring diagrams.
If you have short-circuit at 24 V on transistor outputs	No action is taken and no error is detectable. A short-circuit or overvoltage over 24 V may result in equipment damage.

In the case of a short-circuit or current overload, the common group of outputs automatically enters into thermal protection mode (all outputs in the group are set to 0), and are then periodically rearmed (each second) to test the connection state. However, you must be aware of the effect of this rearming on the machine or process being controlled.

⚠ WARNING

UNINTENDED MACHINE START-UP

Inhibit the automatic rearming of outputs if this feature is an undesirable behavior for your machine or process.

Failure to follow these instructions can result in death, serious injury, or equipment damage.

NOTE: The automatic rearming feature can be inhibited. Refer to the Programming Guide of your controller for more information.

Short-circuit or Over-Current on Sink Transistor Outputs

Sink transistor outputs are not internally protected against overloads or short-circuits.

The following table describes the actions taken on overloads or short-circuits on sink transistor outputs from Q0 to Q3:

If...	then...
If you have short-circuit at 0 V on transistor outputs	Transistor outputs automatically go into over-current protection or thermal protection mode. For more information, refer to transistor output wiring diagrams.
If you have short-circuit at 24 V on transistor outputs	Transistor outputs automatically go into over-current protection mode. For more information, refer to transistor output wiring diagrams.

The following table describes the actions taken on overloads or short-circuits on sink transistor outputs from Q4 to Q15:

If...	then...
If you have short-circuit at 0 V on transistor outputs	no action is taken and no error is detectable. A short-circuit or undervoltage less than 0 V may result in equipment damage.
If you have short-circuit at 24 V on transistor outputs	Transistor outputs automatically go into thermal protection mode. For more information, refer to transistor output wiring diagrams.

Short-circuit or Over-Current on Relay Outputs

Relay outputs are not internally protected against overloads or short-circuits.

The following table describes the actions taken on overloads or short-circuits on relay outputs:

If...	then...
If you have short-circuit or overload at 0 V or 24 V on relay outputs	No action is taken and no error is detectable. For more information, refer to relay output wiring diagrams.

Relay outputs are electromechanical switches capable of carrying significant levels of current and voltage. All electromechanical devices have a limited operational life and must be installed so as to minimize the potential for unintended consequences.

⚠ WARNING

INOPERABLE OUTPUTS

Use appropriate, external safety interlocks on outputs where personnel and/or equipment hazards exist.

Failure to follow these instructions can result in death, serious injury, or equipment damage.

Run/Stop

Run/Stop

Run/Stop

The M241 Logic Controller can be operated externally by the following:

- a hardware Run/Stop switch
- a Run/Stop operation by a dedicated digital input, defined in the software configuration (For more information, refer to Embedded I/Os Configuration.)
- a SoMachine software command.

The M241 Logic Controller has a Run/Stop hardware switch, which puts the controller in a RUN or STOP state.

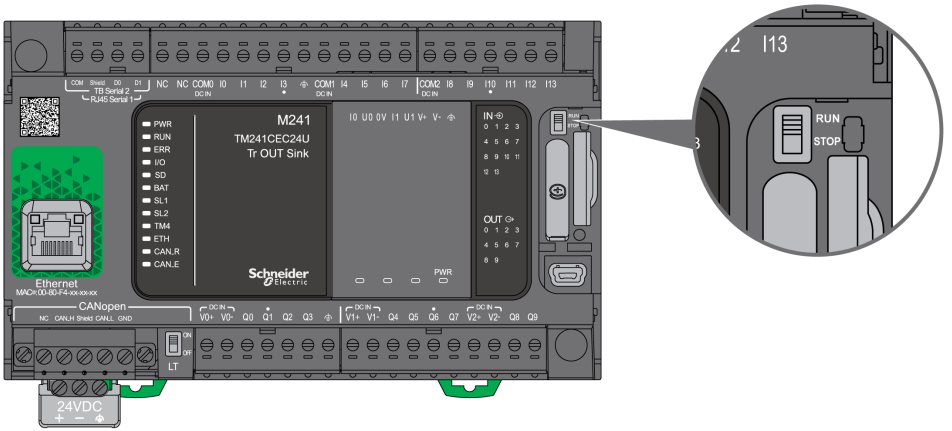

The interaction of the 2 external operators on the controller state behavior is summarized in the table below:

		Embedded hardware Run/Stop switch		
		Switch on Stop	**Stop to Run transition**	**Switch on Run**
Software configurable Run/Stop digital input	**None**	STOP Ignores external Run/Stop commands.	Commands a transition to RUN state[1].	Allows external Run/Stop commands.
	State 0	STOP Ignores external Run/Stop commands.	STOP Ignores external Run/Stop commands.	STOP Ignores external Run/Stop commands.
	Rising edge	STOP Ignores external Run/Stop commands.	Commands a transition to RUN state[1].	Commands a transition to RUN state.
	State 1	STOP Ignores external Run/Stop commands.	Commands a transition to RUN state[1].	Allows external Run/Stop commands.

[1] For more information, refer to the Controller States and Behaviors *(see Modicon M241 Logic Controller, Programming Guide)*.

⚠ WARNING

UNINTENDED MACHINE OR PROCESS START-UP

- Verify the state of security of your machine or process environment before applying power to the Run/Stop input or engaging the Run/Stop switch.
- Use the Run/Stop input to help prevent the unintentional start-up from a remote location, or from accidentally engaging the Run/Stop switch.

Failure to follow these instructions can result in death, serious injury, or equipment damage.

SD Card

Overview

When handling the SD card, follow the instructions below to help prevent internal data on the SD card from being corrupted or lost or a SD card malfunction from occurring:

NOTICE
LOSS OF APPLICATION DATA ● Do not store the SD card where there is static electricity or probable electromagnetic fields. ● Do not store the SD card in direct sunlight, near a heater, or other locations where high temperatures can occur. ● Do not bend the SD card. ● Do not drop or strike the SD card against another object. ● Keep the SD card dry. ● Do not touch the SD card connectors. ● Do not disassemble or modify the SD card. ● Use only SD cards formatted using FAT or FAT32. **Failure to follow these instructions can result in equipment damage.**

The M241 Logic Controller does not recognize NTFS formatted SD cards. Format the SD card on your computer using FAT or FAT32.

When using the M241 Logic Controller and a SD card, observe the following to avoid losing valuable data:

- Accidental data loss can occur at any time. Once data is lost it cannot be recovered.
- If you forcibly extract the SD card, data on the SD card may become corrupted.
- Removing an SD card that is being accessed could damage the SD card, or corrupt its data.
- If the SD card is not positioned correctly when inserted into the controller, the data on the card and the controller could become damaged.

NOTICE
LOSS OF APPLICATION DATA ● Backup SD card data regularly. ● Do not remove power or reset the controller, and do not insert or remove the SD card while it is being accessed. **Failure to follow these instructions can result in equipment damage.**

The following figure shows the SD card slot:

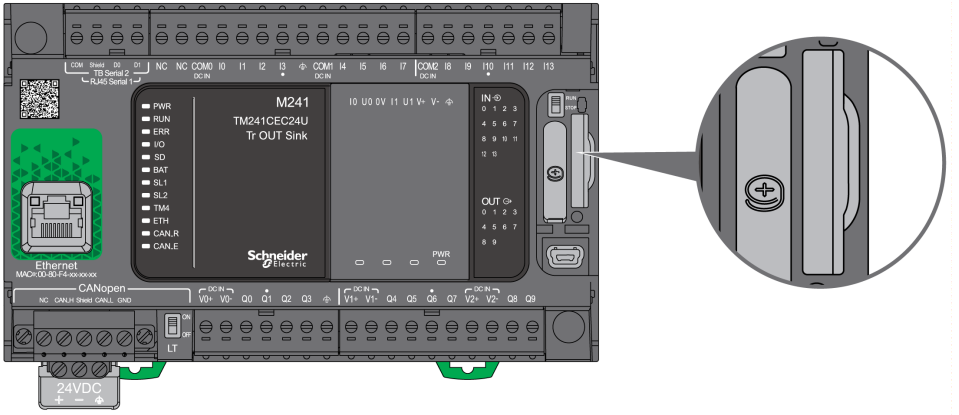

It is possible to set the Write-Control Tab to prevent write operations to the SD card. Push the tab up, as shown in the example on the right-hand side, to release the lock and enable writing to the SD card. Before using an SD card, read the manufacturer's instructions.

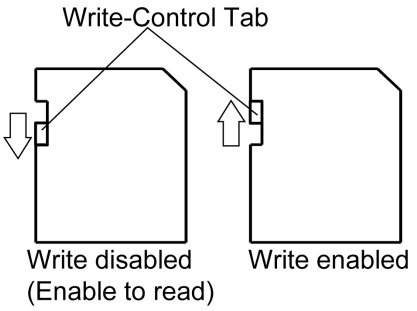

Step	Action
1	Insert the SD card into the SD card slot: 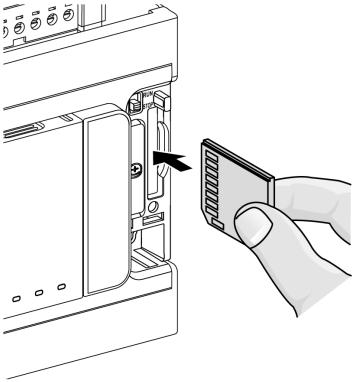
2	Push until you hear it “click”: 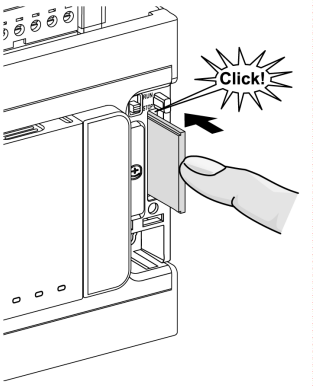

SD Card Slot Characteristics

Topic	Characteristics	Description
Supported type	Standard Capacity	SD (SDSC)
	High Capacity	SDHC
Global memory	Size	32 GB max.

TMASD1 Characteristics

Characteristics	Description
Card removal durability	Minimum 1000 times
File retention time	10 years @ 25 °C (77 °F)
Flash type	SLC NAND
Memory size	256 MB
Ambient operation temperature	–10 … +85°C (14...185 °F)
Storage temperature	–25 … +85°C (–13...185 °F)
Relative humidity	95% max. non-condensing
Write/Erase cycles	3,000,000 (approximately)

NOTE: The TMASD1 has been rigorously tested in association with the logic controller. For other commercially available cards, consult your local sales representative.

NOTE: The SD card can be used directly on your PC.

Status LED

The following figure shows the status LEDs:

The following table describes the SD card status LED:

Label	Description	LED		
		Color	Status	Description
SD	SD card	Green	On	Indicates that the SD card is being accessed.
			Off	Indicates no access.

Chapter 3
M241 Installation

Overview

This chapter provides installation safety guidelines, device dimensions, mounting instructions, and environmental specifications.

What Is in This Chapter?

This chapter contains the following sections:

Section	Topic	Page
3.1	M241 Logic Controller General Rules for Implementing	64
3.2	M241 Logic Controller Installation	69
3.3	M241 Electrical Requirements	83

Section 3.1
M241 Logic Controller General Rules for Implementing

What Is in This Section?

This section contains the following topics:

Topic	Page
Environmental Characteristics	65
Certifications and Standards	68

Environmental Characteristics

Enclosure Requirements

M241 Logic Controller system components are designed as Zone B, Class A industrial equipment according to IEC/CISPR Publication 11. If they are used in environments other than those described in the standard, or in environments that do not meet the specifications in this manual, the ability to meet electromagnetic compatibility requirements in the presence of conducted and/or radiated interference may be reduced.

All M241 Logic Controller system components meet European Community (CE) requirements for open equipment as defined by IEC/EN 61131-2. You must install them in an enclosure designed for the specific environmental conditions and to minimize the possibility of unintended contact with hazardous voltages. Use metal enclosures to improve the electromagnetic immunity of your M241 Logic Controller system. Use enclosures with a keyed locking mechanism to minimize unauthorized access.

Environmental Characteristics

All the M241 Logic Controller module components are electrically isolated between the internal electronic circuit and the input/output channels within the limits set forth and described by these environmental characteristics. For more information on electrical isolation, see the technical specifications of your particular controller found later in the current document. This equipment meets CE requirements as indicated in the table below. This equipment is intended for use in a Pollution Degree 2 industrial environment.

⚠ WARNING

UNINTENDED EQUIPMENT OPERATION

Do not exceed any of the rated values specified in the environmental and electrical characteristics tables.

Failure to follow these instructions can result in death, serious injury, or equipment damage.

The following table shows the general environmental characteristics:

Characteristic		Specification
Standard compliance	IEC/EN 61131-2 IEC/EN 61010-2-201	
Ambient operating temperature	Horizontal installation	–10...55 °C (14...131 °F)
	Vertical installation	–10...50 °C (14...122 °F)
Storage temperature		–25...70 °C (- 13...158 °F)
Relative humidity	Transport and storage	10...95 % (non-condensing)
	Operation	10...95 % (non-condensing)

Characteristic		Specification
Degree of pollution	IEC/EN 60664-1	2
Degree of protection	IEC/EN 61131-2	IP20 with protective covers in place
Machine Safety conformance	IEC/EN 61010-2-201	Yes
Corrosion immunity		Atmosphere free from corrosive gases
Operating altitude		0...2000 m (0...6560 ft)
Storage altitude		0...3000 m (0...9843 ft)
Vibration resistance	IEC/EN 61131-2 Panel mounting or mounted on a top hat section rail (DIN rail)	3.5 mm (0.13 in) fixed amplitude from 5...8.5 Hz 29.4 m/s^2 or 96.45 ft/s^2 (3 g_n) fixed acceleration from 8.7...150 Hz
Mechanical shock resistance		147 m/s^2 or 482.28 ft/s^2 (15 g_n) for a duration of 11 ms

Electromagnetic Susceptibility

The M241 Logic Controller system meets electromagnetic susceptibility specifications as indicated in the following table:

Characteristic	Designed to specification	Range	
Electrostatic discharge	IEC/EN 61000-4-2	8 kV (air discharge) 4 kV (contact discharge)	
Radiated electromagnetic field	IEC/EN 61000-4-3	10 V/m (80...1000 MHz) 3 V/m (1.4...2 GHz) 1 V/m (2...3 GHz)	
Magnetic field	IEC/EN 61000-4-8	30 A/m 50 Hz, 60 Hz	
Fast transients burst	IEC/EN 61000-4-4	–	CM[1] and DM[2]
		AC/DC Power lines	2 kV
		Relay Outputs	2 kV
		24 Vdc I/Os	1 kV
		Analog I/Os	1 kV
		Communication line	1 kV

Characteristic	Designed to specification	Range		
Surge immunity	IEC/EN 61000-4-5 IEC/EN 61131-2	–	CM[1]	DM[2]
		DC Power lines	1 kV	0.5 kV
		AC Power lines	2 kV	1 kV
		Relay Outputs	2 kV	1 kV
		24 Vdc I/Os	1 kV	–
		Shielded cable (between shield and ground)	1 kV	–
Induced electromagnetic field	IEC/EN 61000-4-6	10 Vrms (0.15...80 MHz)		
Conducted emission	IEC/EN 55011 (IEC/CISPR Publication 11)	AC power line: ● 0.15...0.5 MHz: 79 dBµV/m QP / 66 dBµV/m AV ● 0.5...300 MHz: 73 dBµV/m QP / 60 dBµV/m AV		
		AC/DC power line: ● 10...150 kHz: 120...69 dBµV/m QP ● 150...1500 kHz: 79...63 dBµV/m QP ● 1.5...30 MHz: 63 dBµV/m QP		
Radiated emission	IEC/EN 55011 (IEC/CISPR Publication 11)	Class A, 10 m distance: ● 30...230 MHz: 40 dBµV/m QP ● 230...1000 MHz: 47 dBµV/m QP		

1 Common Mode
2 Differential Mode

Certifications and Standards

Introduction

The M241 Logic Controllers are designed to conform to the main national and international standards concerning electronic industrial control devices:

- IEC/EN 61131-2
- UL 508

The M241 Logic Controllers have obtained the following conformity marks:

- CE
- cULus
- CSA

For product compliance and environmental information (RoHS, REACH, PEP, EOLI, etc.), go to *www.schneider-electric.com/green-premium*.

Section 3.2
M241 Logic Controller Installation

What Is in This Section?

This section contains the following topics:

Topic	Page
Installation and Maintenance Requirements	70
M241 Logic Controller Mounting Positions and Clearances	73
Top Hat Section Rail (DIN rail)	76
Installing and Removing the Controller with Expansions	80
Direct Mounting on a Panel Surface	82

Installation and Maintenance Requirements

Before Starting

Read and understand this chapter before beginning the installation of your system.

The use and application of the information contained herein require expertise in the design and programming of automated control systems. Only you, the user, machine builder or integrator, can be aware of all the conditions and factors present during installation and setup, operation, and maintenance of the machine or process, and can therefore determine the automation and associated equipment and the related safeties and interlocks which can be effectively and properly used. When selecting automation and control equipment, and any other related equipment or software, for a particular application, you must also consider any applicable local, regional or national standards and/or regulations.

Pay particular attention in conforming to any safety information, different electrical requirements, and normative standards that would apply to your machine or process in the use of this equipment.

Disconnecting Power

All options and modules should be assembled and installed before installing the control system on a mounting rail, onto a mounting plate or in a panel. Remove the control system from its mounting rail, mounting plate or panel before disassembling the equipment.

⚠ ⚠ DANGER

HAZARD OF ELECTRIC SHOCK, EXPLOSION OR ARC FLASH

- Disconnect all power from all equipment including connected devices prior to removing any covers or doors, or installing or removing any accessories, hardware, cables, or wires except under the specific conditions specified in the appropriate hardware guide for this equipment.
- Always use a properly rated voltage sensing device to confirm the power is off where and when indicated.
- Replace and secure all covers, accessories, hardware, cables, and wires and confirm that a proper ground connection exists before applying power to the unit.
- Use only the specified voltage when operating this equipment and any associated products.

Failure to follow these instructions will result in death or serious injury.

Programming Considerations

⚠ WARNING

UNINTENDED EQUIPMENT OPERATION

- Only use software approved by Schneider Electric for use with this equipment.
- Update your application program every time you change the physical hardware configuration.

Failure to follow these instructions can result in death, serious injury, or equipment damage.

Operating Environment

In addition to the **Environmental Characteristics**, refer to **Product Related Information** in the beginning of the present document for important information regarding installation in hazardous locations for this specific equipment.

⚠ WARNING

UNINTENDED EQUIPMENT OPERATION

Install and operate this equipment according to the conditions described in the Environmental Characteristics.

Failure to follow these instructions can result in death, serious injury, or equipment damage.

Installation Considerations

⚠ WARNING

UNINTENDED EQUIPMENT OPERATION

- Use appropriate safety interlocks where personnel and/or equipment hazards exist.
- Install and operate this equipment in an enclosure appropriately rated for its intended environment and secured by a keyed or tooled locking mechanism.
- Use the sensor and actuator power supplies only for supplying power to the sensors or actuators connected to the module.
- Power line and output circuits must be wired and fused in compliance with local and national regulatory requirements for the rated current and voltage of the particular equipment.
- Do not use this equipment in safety-critical machine functions unless the equipment is otherwise designated as functional safety equipment and conforming to applicable regulations and standards.
- Do not disassemble, repair, or modify this equipment.
- Do not connect any wiring to reserved, unused connections, or to connections designated as No Connection (N.C.).

Failure to follow these instructions can result in death, serious injury, or equipment damage.

NOTE: JDYX2 or JDYX8 fuse types are UL-recognized and CSA approved.

M241 Logic Controller Mounting Positions and Clearances

Introduction

This section describes the mounting positions for the M241 Logic Controller .

NOTE: Keep adequate spacing for proper ventilation and to maintain the operating temperature specified in the Environmental Characteristics *(see page 65)*.

Correct Mounting Position

Whenever possible, the M241 Logic Controller should be mounted horizontally on a vertical plane as shown in the figure below:

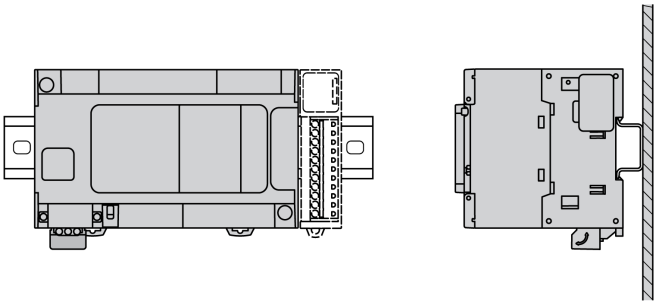

Acceptable Mounting Positions

The M241 Logic Controller can also be mounted vertically with a temperature derating on a vertical plane as shown below.

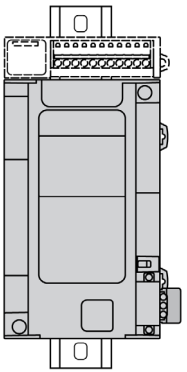

NOTE: Expansion modules must be mounted above the logic controller.

Incorrect Mounting Position

The M241 Logic Controller should only be positioned as shown in Correct Mounting Position *(see page 73)* figure. The figures below show the incorrect mounting positions.

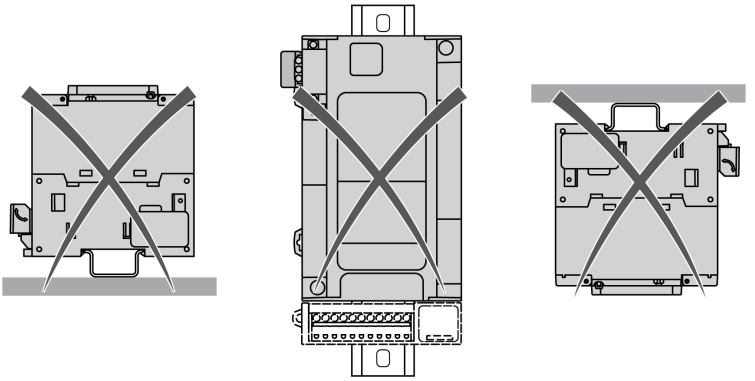

Minimum Clearances

⚠ WARNING

UNINTENDED EQUIPMENT OPERATION

- Place devices dissipating the most heat at the top of the cabinet and ensure adequate ventilation.
- Avoid placing this equipment next to or above devices that might cause overheating.
- Install the equipment in a location providing the minimum clearances from all adjacent structures and equipment as directed in this document.
- Install all equipment in accordance with the specifications in the related documentation.

Failure to follow these instructions can result in death, serious injury, or equipment damage.

The M241 Logic Controller has been designed as an IP20 product and must be installed in an enclosure. Clearances must be respected when installing the product.

There are 3 types of clearances between:

- The M241 Logic Controller and all sides of the cabinet (including the panel door).
- The M241 Logic Controller terminal blocks and the wiring ducts. This distance reduces electromagnetic interference between the controller and the wiring ducts.
- The M241 Logic Controller and other heat generating devices installed in the same cabinet.

The following figure shows the minimum clearances that apply to all M241 Logic Controller references:

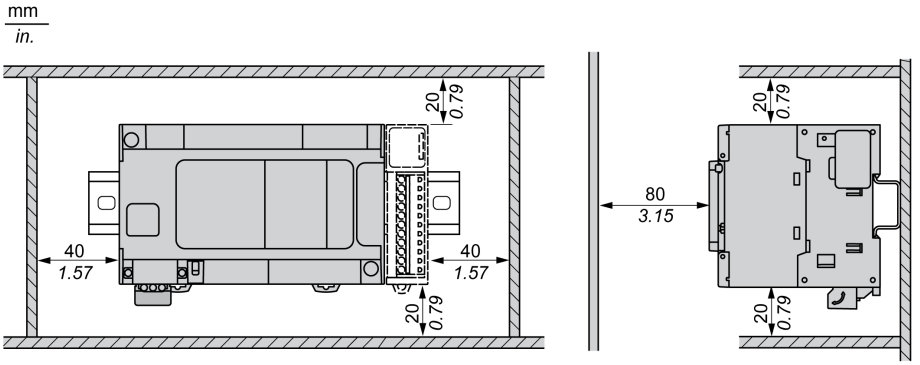

Top Hat Section Rail (DIN rail)

Dimensions of Top Hat Section Rail DIN Rail

You can mount the controller or receiver and its expansions on a 35 mm (1.38 in.) top hat section rail (DIN rail). It can be attached to a smooth mounting surface or suspended from a EIA rack or mounted in a NEMA cabinet.

Symmetric Top Hat Section Rails (DIN Rail)

The following illustration and table show the references of the top hat section rails (DIN rail) for the wall-mounting range:

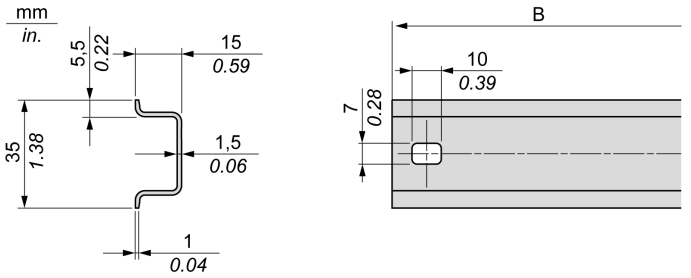

Reference	Type	Rail Length (B)
NSYSDR50A	A	450 mm (17.71 in.)
NSYSDR60A	A	550 mm (21.65 in.)
NSYSDR80A	A	750 mm (29.52 in.)
NSYSDR100A	A	950 mm (37.40 in.)

The following illustration and table show the references of the symmetric top hat section rails (DIN rail) for the metal enclosure range:

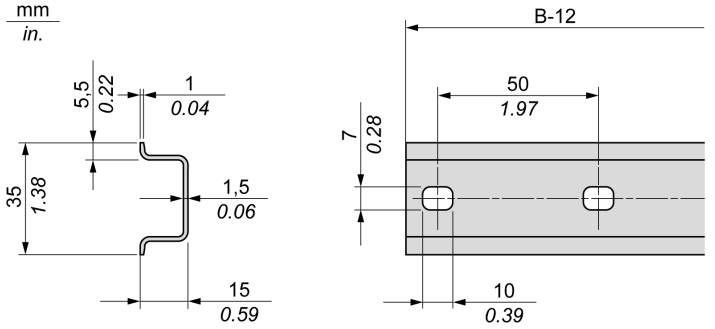

Reference	Type	Rail Length (B-12 mm)
NSYSDR60	A	588 mm (23.15 in.)
NSYSDR80	A	788 mm (31.02 in.)
NSYSDR100	A	988 mm (38.89 in.)
NSYSDR120	A	1188 mm (46.77 in.)

The following illustration and table shows the references of the symmetric top hat section rails (DIN rail) of 2000 mm (78.74 in.):

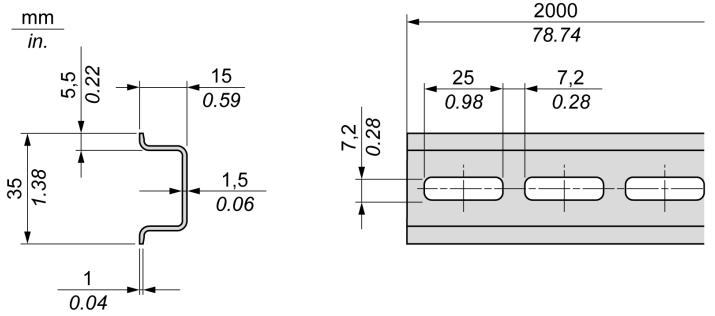

Reference	Type	Rail Length
NSYSDR200[1]	A	2000 mm (78.74 in.)
NSYSDR200D[2]	A	
1 Unperforated galvanized steel **2** Perforated galvanized steel		

Double-Profile Top Hat Section Rails (DIN rail)

The following illustration and table show the references of the double-profile top hat section rails (DIN rails) for the wall-mounting range:

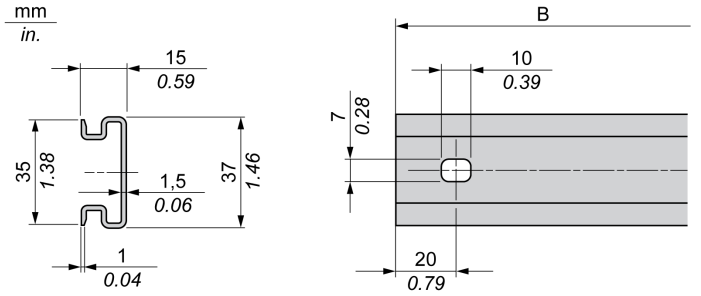

Reference	Type	Rail Length (B)
NSYDPR25	W	250 mm (9.84 in.)
NSYDPR35	W	350 mm (13.77 in.)
NSYDPR45	W	450 mm (17.71 in.)
NSYDPR55	W	550 mm (21.65 in.)
NSYDPR65	W	650 mm (25.60 in.)
NSYDPR75	W	750 mm (29.52 in.)

The following illustration and table show the references of the double-profile top hat section rails (DIN rail) for the floor-standing range:

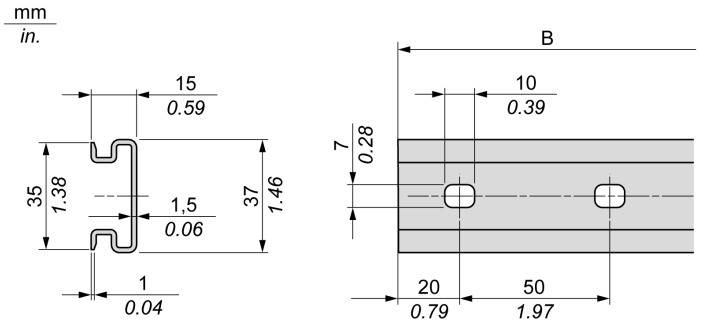

Reference	Type	Rail Length (B)
NSYDPR60	F	588 mm (23.15 in.)
NSYDPR80	F	788 mm (31.02 in.)
NSYDPR100	F	988 mm (38.89 in.)
NSYDPR120	F	1188 mm (46.77 in.)

Installing and Removing the Controller with Expansions

Overview

This section describes how to install and remove the controller with its expansion modules from a top hat section rail (DIN rail).

To assemble expansion modules to a controller or receiver module, or to other modules, refer to the respective expansion modules hardware guide(s).

Installing a Controller with its Expansions on a DIN Rail

The following procedure describes how to install a controller with its expansion modules on a top hat section rail (DIN rail):

Step	Action
1	Fasten the top hat section rail (DIN rail) to a panel surface using screws.
2	Position the top groove of the controller and its expansion modules on the top edge of the DIN rail and press the assembly against the top hat section rail (DIN rail) until you hear the top hat section rail (DIN rail) clip snap into place. 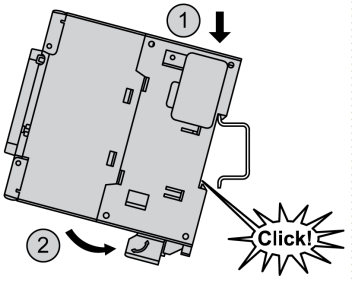

Step	Action
3	Place 2 terminal block end clamps on both sides of the controller and expansion module assembly. 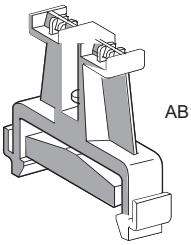 AB1AB8P35 **NOTE:** Type ABB8P35 or equivalent terminal block end clamps help minimize sideways movement and improve the shock and vibration characteristics of the controller and expansion module assembly.

Removing a Controller with its Expansions from a Top Hat Section Rail (DIN Rail)

The following procedure describes how to remove a controller with its expansion modules from a top hat section rail (DIN rail):

Step	Action
1	Remove all power from your controller and expansion modules.
2	Insert a flat screwdriver into the slot of the top hat section rail (DIN rail) clip. 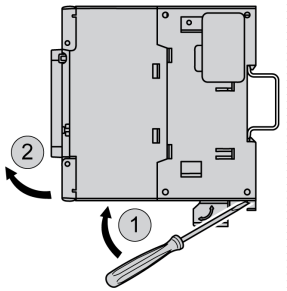
3	Pull down the DIN rail clip.
4	Pull the controller and its expansion modules from the top hat section rail (DIN rail) from the bottom.

Direct Mounting on a Panel Surface

Mounting Hole Layout

The following diagram shows the mounting hole layout for M241 Logic Controller with 24 I/O channels:

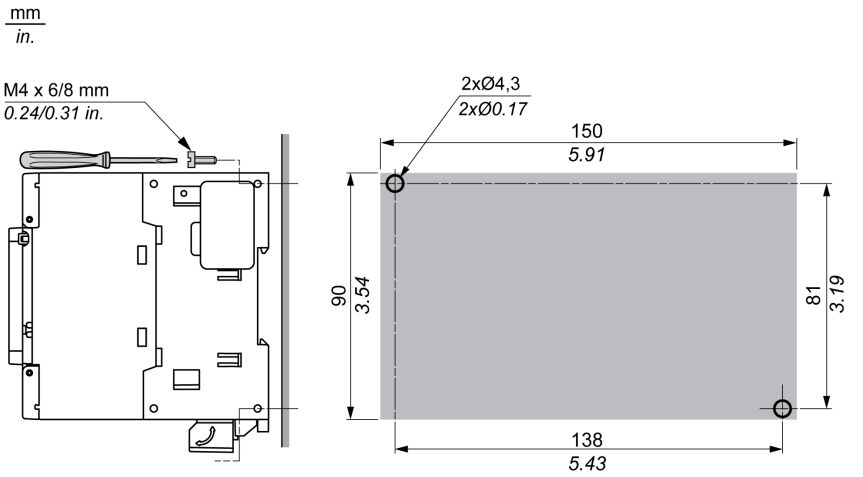

The following diagram shows the mounting hole layout for M241 Logic Controller with 40 I/O channels:

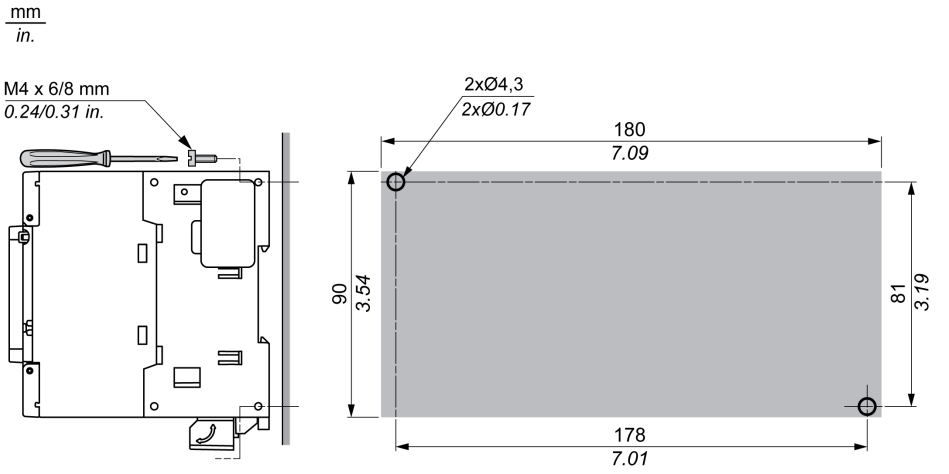

Section 3.3
M241 Electrical Requirements

What Is in This Section?

This section contains the following topics:

Topic	Page
Wiring Best Practices	84
DC Power Supply Characteristics and Wiring	90
AC Power Supply Characteristics and Wiring	94
Grounding the M241 System	96

Wiring Best Practices

Overview

This section describes the wiring guidelines and associated best practices to be respected when using the M241 Logic Controller system.

⚠⚠ DANGER

HAZARD OF ELECTRIC SHOCK, EXPLOSION OR ARC FLASH

- Disconnect all power from all equipment including connected devices prior to removing any covers or doors, or installing or removing any accessories, hardware, cables, or wires except under the specific conditions specified in the appropriate hardware guide for this equipment.
- Always use a properly rated voltage sensing device to confirm the power is off where and when indicated.
- Replace and secure all covers, accessories, hardware, cables, and wires and confirm that a proper ground connection exists before applying power to the unit.
- Use only the specified voltage when operating this equipment and any associated products.

Failure to follow these instructions will result in death or serious injury.

⚠ WARNING

LOSS OF CONTROL

- The designer of any control scheme must consider the potential failure modes of control paths and, for certain critical control functions, provide a means to achieve a safe state during and after a path failure. Examples of critical control functions are emergency stop and overtravel stop, power outage and restart.
- Separate or redundant control paths must be provided for critical control functions.
- System control paths may include communication links. Consideration must be given to the implications of unanticipated transmission delays or failures of the link.
- Observe all accident prevention regulations and local safety guidelines.[1]
- Each implementation of this equipment must be individually and thoroughly tested for proper operation before being placed into service.

Failure to follow these instructions can result in death, serious injury, or equipment damage.

[1] For additional information, refer to NEMA ICS 1.1 (latest edition), "Safety Guidelines for the Application, Installation, and Maintenance of Solid State Control" and to NEMA ICS 7.1 (latest edition), "Safety Standards for Construction and Guide for Selection, Installation and Operation of Adjustable-Speed Drive Systems" or their equivalent governing your particular location.

Wiring Guidelines

The following rules must be applied when wiring a M241 Logic Controller system:

- I/O and communication wiring must be kept separate from the power wiring. Route these 2 types of wiring in separate cable ducting.
- Verify that the operating conditions and environment are within the specification values.
- Use proper wire sizes to meet voltage and current requirements.
- Use copper conductors (required).
- Use twisted pair, shielded cables for analog, and/or fast I/O.
- Use twisted pair, shielded cables for networks, and fieldbus.

Use shielded, properly grounded cables for all analog and high-speed inputs or outputs and communication connections. If you do not use shielded cable for these connections, electromagnetic interference can cause signal degradation. Degraded signals can cause the controller or attached modules and equipment to perform in an unintended manner.

⚠ WARNING

UNINTENDED EQUIPMENT OPERATION

- Use shielded cables for all fast I/O, analog I/O and communication signals.
- Ground cable shields for all analog I/O, fast I/O and communication signals at a single point[1].
- Route communication and I/O cables separately from power cables.

Failure to follow these instructions can result in death, serious injury, or equipment damage.

[1]Multipoint grounding is permissible if connections are made to an equipotential ground plane dimensioned to help avoid cable shield damage in the event of power system short-circuit currents.

For more details, refer to Grounding Shielded Cables *(see page 96)*.

NOTE: Surface temperatures may exceed 60 °C (140 °F). To conform to IEC 61010 standards, route primary wiring (wires connected to power mains) separately and apart from secondary wiring (extra low voltage wiring coming from intervening power sources). If that is not possible, double insulation is required such as conduit or cable gains.

Rules for Removable Screw Terminal Block

The following tables show the cable types and wire sizes for a **5.08 pitch** removable screw terminal block (I/Os and power supply):

mm / *in.* 7 / *0.28*								
mm^2	0.2…2.5	0.2…2.5	0.25…2.5	0.25…2.5	2 x 0.2…1	2 x 0.2…1.5	2 x 0.25…1	2 x 0.5...1.5
AWG	*24…14*	*24…14*	*23...14*	*23...14*	*2 x 24…17*	*2 x 24…16*	*2 x 23…17*	*2 x 20...16*

Ø 3,5 mm (*0.14 in.*)		N•m	0.5...0.6
		lb-in	*4.42...5.31*

The use of copper conductors is required.

⚠ ⚠ DANGER

LOOSE WIRING CAUSES ELECTRIC SHOCK

- Tighten connections in conformance with the torque specifications.
- Do not insert more than one wire per connector of the terminal block unless using the cable ends (ferrules) specified above.

Failure to follow these instructions will result in death or serious injury.

⚠ DANGER

FIRE HAZARD

- Use only the correct wire sizes for the current capacity of the I/O channels and power supplies.
- For relay output (2 A) wiring, use conductors of at least 0.5 mm^2 (AWG 20) with a temperature rating of at least 80 °C (176 °F).
- For common conductors of relay output wiring (7 A), or relay output wiring greater than 2 A, use conductors of at least 1.0 mm^2 (AWG 16) with a temperature rating of at least 80 °C (176 °F).

Failure to follow these instructions will result in death or serious injury.

Removing the I/O Terminal Block

The following figure shows the removal of the I/O terminal block from the M241 Logic Controller:

Step	Action
1	Remove power from your controller.
2	Pull down the protective cache: 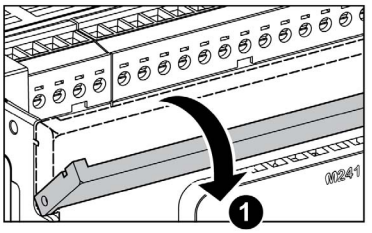

Step	Action
3	Press with a screwdriver through the terminal block front hole: 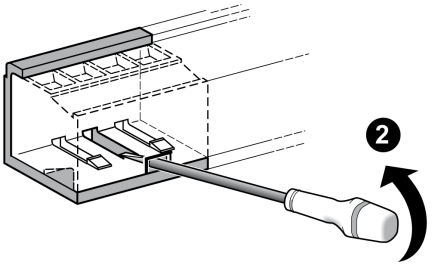
4	Remove the terminal block: 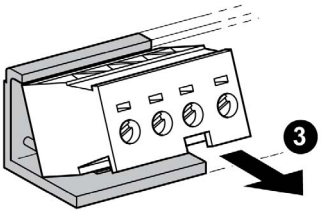

Protecting Outputs from Inductive Load Damage

Depending on the load, a protection circuit may be needed for the outputs on the controllers and certain modules. Inductive loads using DC voltages may create voltage reflections resulting in overshoot that will damage or shorten the life of output devices.

⚠ CAUTION

OUTPUT CIRCUIT DAMAGE DUE TO INDUCTIVE LOADS

Use an appropriate external protective circuit or device to reduce the risk of inductive direct current load damage.

Failure to follow these instructions can result in injury or equipment damage.

If your controller or module contains relay outputs, these types of outputs can support up to 240 Vac. Inductive damage to these types of outputs can result in welded contacts and loss of control. Each inductive load must include a protection device such as a peak limiter, RC circuit or flyback diode. Capacitive loads are not supported by these relays.

⚠ WARNING

RELAY OUTPUTS WELDED CLOSED

- Always protect relay outputs from inductive alternating current load damage using an appropriate external protective circuit or device.
- Do not connect relay outputs to capacitive loads.

Failure to follow these instructions can result in death, serious injury, or equipment damage.

AC-driven contactor coils are, under certain circumstances, inductive loads that generate pronounced high-frequency interference and electrical transients when the contactor coil is de-energized. This interference may cause the logic controller to detect an I/O bus error.

⚠ WARNING

CONSEQUENTIAL LOSS OF CONTROL

Install an RC surge suppressor or similar means, such as an interposing relay, on each TM3 expansion module relay output when connecting to AC-driven contactors or other forms of inductive loads.

Failure to follow these instructions can result in death, serious injury, or equipment damage.

Protective circuit A: this protection circuit can be used for both AC and DC load power circuits.

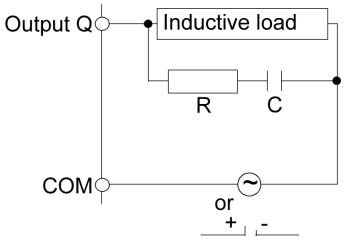

C Value from 0.1 to 1 µF

R Resistor of approximately the same resistance value as the load

Protective circuit B: this protection circuit can be used for DC load power circuits.

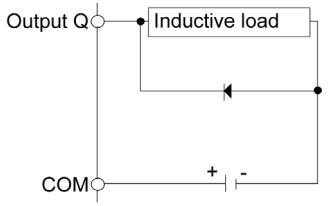

Use a diode with the following ratings:

- Reverse withstand voltage: power voltage of the load circuit x 10.
- Forward current: more than the load current.

Protective circuit C: this protection circuit can be used for both AC and DC load power circuits.

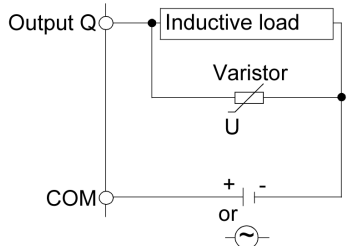

In applications where the inductive load is switched on and off frequently and/or rapidly, ensure that the continuous energy rating (J) of the varistor exceeds the peak load energy by 20 % or more.

DC Power Supply Characteristics and Wiring

Overview

This section provides the characteristics and the wiring diagrams of the DC power supply.

DC Power Supply Voltage Range

If the specified voltage range is not maintained, outputs may not switch as expected. Use appropriate safety interlocks and voltage monitoring circuits.

⚠ DANGER

FIRE HAZARD

- Use only the correct wire sizes for the current capacity of the I/O channels and power supplies.
- For relay output (2 A) wiring, use conductors of at least 0.5 mm^2 (AWG 20) with a temperature rating of at least 80 °C (176 °F).
- For common conductors of relay output wiring (7 A), or relay output wiring greater than 2 A, use conductors of at least 1.0 mm^2 (AWG 16) with a temperature rating of at least 80 °C (176 °F).

Failure to follow these instructions will result in death or serious injury.

⚠ WARNING

UNINTENDED EQUIPMENT OPERATION

Do not exceed any of the rated values specified in the environmental and electrical characteristics tables.

Failure to follow these instructions can result in death, serious injury, or equipment damage.

DC Power Supply Requirements

The M241 Logic Controller and associated I/O (TM2,TM3 and embedded I/O) require power supplies with a nominal voltage of 24 Vdc. The 24 Vdc power supplies must be rated Safety Extra Low Voltage (SELV) or Protective Extra Low Voltage (PELV) according to IEC 61140. These power supplies are isolated between the electrical input and output circuits of the power supply.

⚠ WARNING

POTENTIAL OF OVERHEATING AND FIRE

- Do not connect the equipment directly to line voltage.
- Use only isolating PELV or SELV power supplies to supply power to the equipment[1].

Failure to follow these instructions can result in death, serious injury, or equipment damage.

[1]For compliance to UL (Underwriters Laboratories) requirements, the power supply must also be of a type Class 2 with a maximum power output availability of less than 100 VA (approximately 4 A at nominal voltage). A Class 2 circuit requires dry indoor use only in non-hazardous locations, and must be grounded. You must separate Class 2 circuits from other circuits. If a non-Class 2 power source is used, either power supply or transformer, you must impose a current limiting device such as a fuse or a circuit breaker with a maximum rating of 4 A, but never exceeding the limits indicated in the electric characteristics and wiring diagrams for this equipment. If the indicated rating of the electrical characteristics or wiring diagrams are greater than 4 A, multiple Class 2 power supplies may be used.

Controller DC Characteristics

The following table shows the DC power supply characteristics required for the controller:

Characteristic		Value	
Rated voltage		24 Vdc	
Power supply voltage range		20.4...28.8 Vdc	
Power interruption time		1 ms at 24 Vdc	
Maximum inrush current		50 A	
Power consumption		32.6 W	max. 40.4 W
Isolation	between DC power supply and internal logic	Not isolated	
	between DC power supply and protective earth ground (PE)	500 Vac	

Power interruption

The TM241C••24T / TM241C•40T / TM241C••24U and TM241C•40U must be supplied by an external 24 V power supply equipment. During power interruptions, the M241 Logic Controller, associated to the suitable power supply, is able to continue normal operation for a minimum of 10 ms as specified by IEC standards.

When planning the management of the power supplied to the controller, you must consider the power interruption duration due to the fast cycle time of the controller.

There could potentially be many scans of the logic and consequential updates to the I/O image table during the power interruption, while there is no external power supplied to the inputs, the outputs or both depending on the power system architecture and power interruption circumstances.

⚠ WARNING

UNINTENDED EQUIPMENT OPERATION

- Individually monitor each source of power used in the controller system including input power supplies, output power supplies and the power supply to the controller to allow appropriate system shutdown during power system interruptions.
- The inputs monitoring each of the power supply sources must be unfiltered inputs.

Failure to follow these instructions can result in death, serious injury, or equipment damage.

DC Power Supply Wiring Diagram

The following figure shows the power supply terminal block removal procedure:

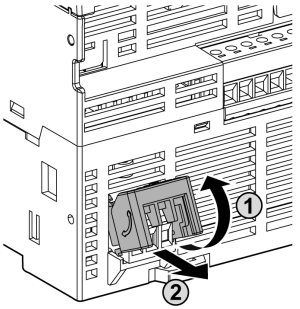

The following figure shows the wiring of the DC power supply:

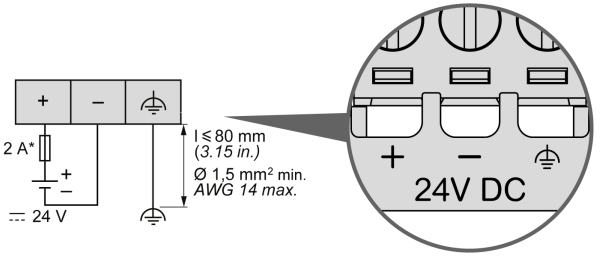

* Type T fuse

For more information, refer to the 5.08 pitch Rules for Removable Screw Terminal block *(see page 85)*.

AC Power Supply Characteristics and Wiring

Overview

This section provides the wiring diagrams and the characteristics of the AC power supply.

AC Power Supply Voltage Range

If the specified voltage range is not maintained, outputs may not switch as expected. Use appropriate safety interlocks and voltage monitoring circuits.

⚠ DANGER

FIRE HAZARD

- Use only the correct wire sizes for the current capacity of the I/O channels and power supplies.
- For relay output (2 A) wiring, use conductors of at least 0.5 mm^2 (AWG 20) with a temperature rating of at least 80 °C (176 °F).
- For common conductors of relay output wiring (7 A), or relay output wiring greater than 2 A, use conductors of at least 1.0 mm^2 (AWG 16) with a temperature rating of at least 80 °C (176 °F).

Failure to follow these instructions will result in death or serious injury.

⚠ WARNING

UNINTENDED EQUIPMENT OPERATION

Do not exceed any of the rated values specified in the environmental and electrical characteristics tables.

Failure to follow these instructions can result in death, serious injury, or equipment damage.

Controller AC Characteristics

The following table shows the AC power supply characteristics:

Characteristic		Value
Voltage	rated	100...240 Vac
	limit (including ripple)	85...264 Vac
Frequency		50/60 Hz
Power interruption time	at 100 Vac	10 ms
Maximum inrush current	at 240 Vac	42.5 A

Characteristic		Value
Typical power consumption	at 100 Vac	78 VA
	at 240 Vac	98.4 VA
Isolation	between AC power supply and internal logic	1780 Vac
	between AC power supply and protective earth ground (PE)	2500 Vdc

Power interruption

The duration of power interruptions where the M241 Logic Controller is able to continue normal operation varies depending upon the load to the power supply of the controller, but generally a minimum of 10 ms is maintained as specified by IEC standards.

If there is a minimum load on the controller power supply, the interruption can be as long as 400 ms.

When planning the management of the power supplied to the controller, you must consider the duration due to the fast cycle time.

There could potentially be many scans of the logic and consequential updates to the I/O image table during the power interruption, while there is no external power supplied to the inputs, the outputs or both depending on the power system architecture and power interruption circumstances.

⚠ WARNING

UNINTENDED EQUIPMENT OPERATION

- Individually monitor each source of power used in the Modicon M241 Logic Controller system including input power supplies, output power supplies and the power supply to the controller to allow appropriate system shutdown during power system interruptions.
- The inputs monitoring each of the power supply sources must be unfiltered inputs.

Failure to follow these instructions can result in death, serious injury, or equipment damage.

AC Power Supply Wiring Diagram

The following figure shows the wiring of the AC power supply:

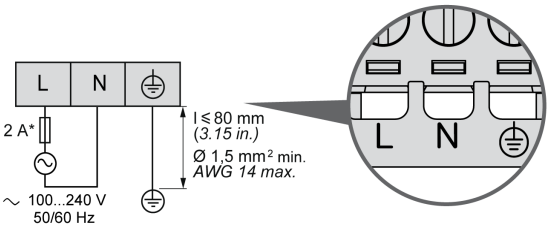

* Use an external, slow-blow, type T fuse.

Grounding the M241 System

Overview

To help minimize the effects of electromagnetic interference, cables carrying the fast I/O, analog I/O, and field bus communication signals must be shielded.

⚠ WARNING

UNINTENDED EQUIPMENT OPERATION

- Use shielded cables for all fast I/O, analog I/O, and communication signals.
- Ground cable shields for all fast I/O, analog I/O, and communication signals at a single point[1].
- Route communications and I/O cables separately from power cables.

Failure to follow these instructions can result in death, serious injury, or equipment damage.

[1]Multipoint grounding is permissible if connections are made to an equipotential ground plane dimensioned to help avoid cable shield damage in the event of power system short-circuit currents.

The use of shielded cables requires compliance with the following wiring rules:

- For protective ground connections (PE), metal conduit or ducting can be used for part of the shielding length, provided there is no break in the continuity of the ground connections. For functional ground (FE), the shielding is intended to attenuate electromagnetic interference and the shielding must be continuous for the length of the cable. If the purpose is both functional and protective, as is often the case for communication cables, the cable must have continuous shielding.
- Wherever possible, keep cables carrying one type of signal separate from the cables carrying other types of signals or power.

Protective Ground (PE) on the Backplane

The protective ground (PE) should be connected to the conductive backplane by a heavy-duty wire, usually a braided copper cable with the maximum allowable cable section.

Shielded Cables Connections

Cables carrying the fast I/O, analog I/O, and field bus communication signals must be shielded. The shielding must be securely connected to ground. The fast I/O and analog I/O shields may be connected either to the functional ground (FE) or to the protective ground (PE) of your M241 Logic Controller. The field bus communication cable shields must be connected to the protective ground (PE) with a connecting clamp secured to the conductive backplane of your installation.

⚠ WARNING

ACCIDENTAL DISCONNECTION FROM PROTECTIVE GROUND (PE)

- Do not use the TM2XMTGB Grounding Plate to provide a protective ground (PE).
- Use the TM2XMTGB Grounding Plate only to provide a functional ground (FE).

Failure to follow these instructions can result in death, serious injury, or equipment damage.

The shielding of the Modbus cable must be connected to the protective ground (PE).

⚠⚠ DANGER

HAZARD OF ELECTRIC SHOCK

- The grounding terminal connection (PE) must be used to provide a protective ground at all times.
- Make sure that an appropriate, braided ground cable is attached to the PE/PG ground terminal before connecting or disconnecting the network cable to the equipment.

Failure to follow these instructions will result in death or serious injury.

Protective Ground (PE) Cable Shielding

To ground the shield of a cable through a grounding clamp:

Step	Description	
1	Strip the shielding for a length of 15 mm (0.59 in.)	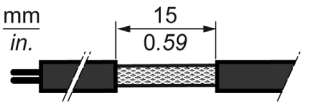
2	Attach the cable to the conductive backplane plate by attaching the grounding clamp to the stripped part of the shielding as close as possible to the M241 Logic Controller system base.	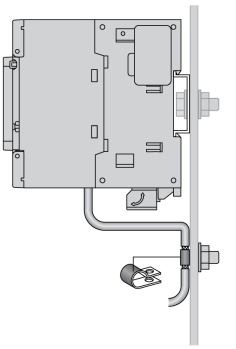

NOTE: The shielding must be clamped securely to the conductive backplane to ensure a good contact.

Functional Ground (FE) Cable Shielding

To connect the shield of a cable through the Grounding Bar:

Step	Description	
1	Install the Grounding Bar *(see Modicon TM2, Digital I/O Modules, Hardware Guide)* directly on the conductive backplane below the M241 Logic Controller system as illustrated.	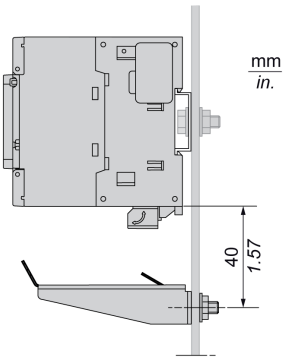
2	Strip the shielding for a length of 15 mm (0.59 in.	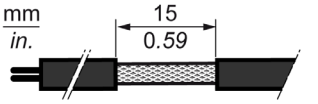
3	Tightly clamp on the blade connector **(1)** using nylon fastener **(2)**(width 2.5...3 mm (0.1...0.12 in.)) and appropriate tool.	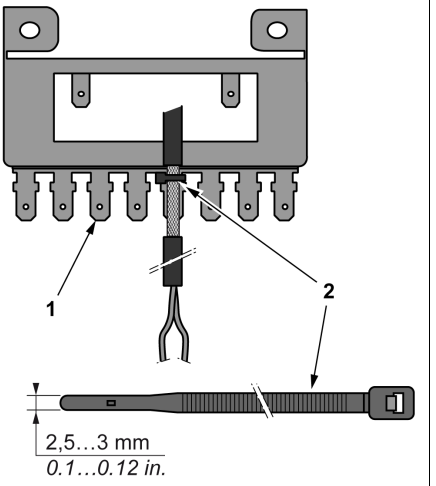

NOTE: Use the TM2XMTGB Grounding Bar for Functional Ground (FE) connections.

Part II
Modicon M241 Logic Controller

What Is in This Part?

This part contains the following chapters:

Chapter	Chapter Name	Page
4	TM241C24R	103
5	TM241CE24R	109
6	TM241CEC24R	115
7	TM241C24T	121
8	TM241CE24T	127
9	TM241CEC24T	133
10	TM241C24U	139
11	TM241CE24U	145
12	TM241CEC24U	151
13	TM241C40R	157
14	TM241CE40R	163
15	TM241C40T	169
16	TM241CE40T	175
17	TM241C40U	181
18	TM241CE40U	187
19	Embedded I/O Channels	193

Chapter 4
TM241C24R

TM241C24R Presentation

Overview

TM241C24R logic controller:

- 14 digital inputs
  - 8 fast inputs
  - 6 regular inputs
- 10 digital outputs
  - 4 fast outputs
  - 6 relay outputs (2 A)
- Communication port
  - 2 serial line ports
  - 1 USB mini-B programming port

Description

The following figure shows the different components of the TM241C24R logic controller:

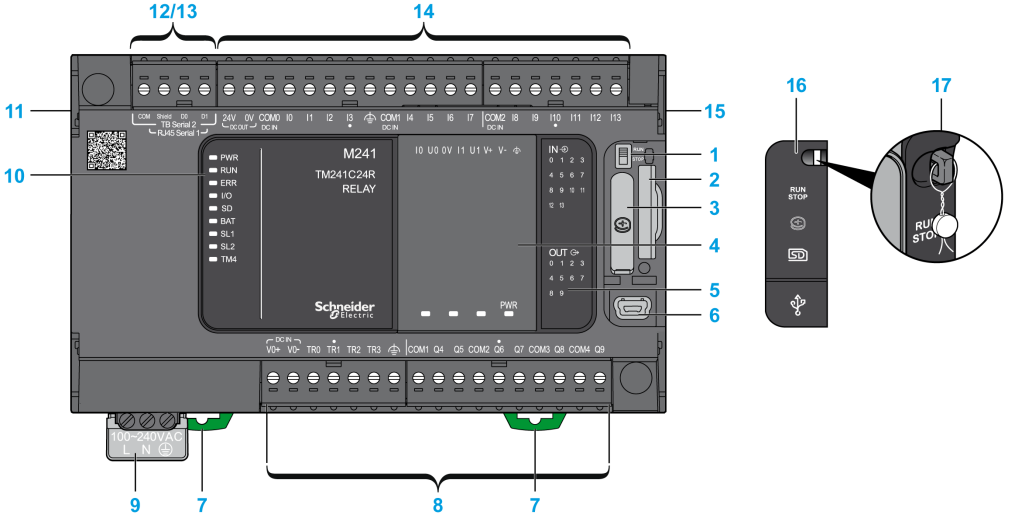

N°	Description	Refer to
1	Run/Stop switch	Run/Stop *(see page 57)*
2	SD card slot	SD Card *(see page 59)*
3	Battery holder	Real Time Clock (RTC) *(see page 44)*
4	Cartridge slot	–
5	LEDs for indicating I/O states	Digital Inputs Status LEDs *(see page 195)*
		Relay Outputs Status LEDs *(see page 203)* Fast Outputs Status LEDs *(see page 214)*
6	USB mini-B programming port / For terminal connection to a programming PC (SoMachine)	USB Mini-B Programming Port *(see page 229)*
7	Clip-on lock for 35 mm (1.38 in.) top hat section rail (DIN-rail)	Top Hat Section Rail *(see page 76)*
8	Embedded relay outputs	Relay Outputs *(see page 202)*
	Embedded fast transistor outputs	Fast Transistor Outputs *(see page 213)*
	Output removable terminal block	Rules for Removable Screw Terminal Block *(see page 85)*
9	100...240 Vac 50/60 Hz power supply	AC Power Supply Characteristics and Wiring *(see page 94)*
10	Status LEDs	–
11	TM4 bus connector	TM4 Expansion Modules *(see page 27)*
12	Serial line port 1 / Type RJ45 (RS-232 or RS-485)	Serial Line 1 *(see page 231)*
13	Serial line port 2 / Screw terminal block type (RS-485)	Serial Line 2 *(see page 234)*
14	Embedded digital inputs	Embedded Digital Inputs *(see page 194)*
	Input removable terminal block	Rules for Removable Screw Terminal Block *(see page 85)*
15	TM3/TM2 bus connector	TM3 Expansion Modules *(see page 28)*
16	Protective cover (SD card slot, Run/Stop switch, and USB mini-B programming port)	–
17	Locking hook (Hook not included)	–

Status LEDs

The following figure shows the status LEDs:

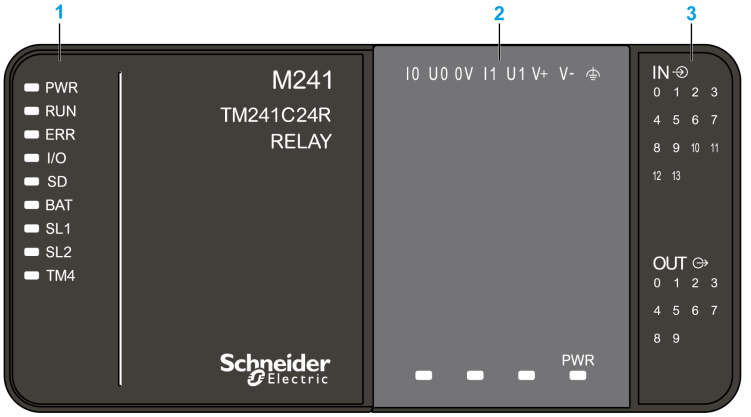

1 System status LEDs
2 Cartridge status LEDs (optional)
3 I/Os status LEDs

The following table describes the system status LEDs:

Label	Function Type	Color	Status	Description		
				Controller States[1]	Prg Port Communication	Application Execution
PWR	Power	Green	On	Indicates that power is applied.		
			Off	Indicates that power is removed.		
RUN	Machine status	Green	On	Indicates that the controller is running a valid application.		
			Flashing	Indicates that the controller has a valid application that is stopped.		
			1 flash	Indicates that the controller has paused at BREAKPOINT.		
			Off	Indicates that the controller is not programmed	-	-

Label	Function Type	Color	Status	Description		
				Controller States[1]	Prg Port Communication	Application Execution
ERR	Error	Red	On	Indicates that an operating system error has been detected.	Restricted	No
			Fast flashing	Indicates that the controller has detected an internal error.	Restricted	No
			Slow flashing	Indicates either that a minor error has been detected, if the RUN LED is illuminated, or that no application has been detected.	Yes	No
I/O	I/O error	Red	On	Indicates device errors on the embedded I/Os, serial line 1 or 2, SD card, cartridge, TM4 bus, TM3 bus.		
SD	SD card access	Green	On	Indicates that the SD card is being accessed		
BAT	Battery	Red	On	Indicates that the battery needs to be replaced.		
			Flashing	Indicates that the battery charge is low.		
SL1	Serial line 1	Green	On	Indicates the status of serial line 1 *(see page 233)*		
			Off	Indicates no serial communication		
SL2	Serial line 2	Green	On	Indicates the status of serial line 2 *(see page 235)*		
			Off	Indicates no serial communication		
TM4	Error on TM4 bus	Red	On	Indicates that an error has been detected on the TM4 bus		
			Off	Indicates that no error has been detected on the TM4 bus		

[1] For more information about the controller state description, refer to the M241 Logic Controller - Programming Guide.

Dimensions

The following figure shows the external dimensions of the logic controller:

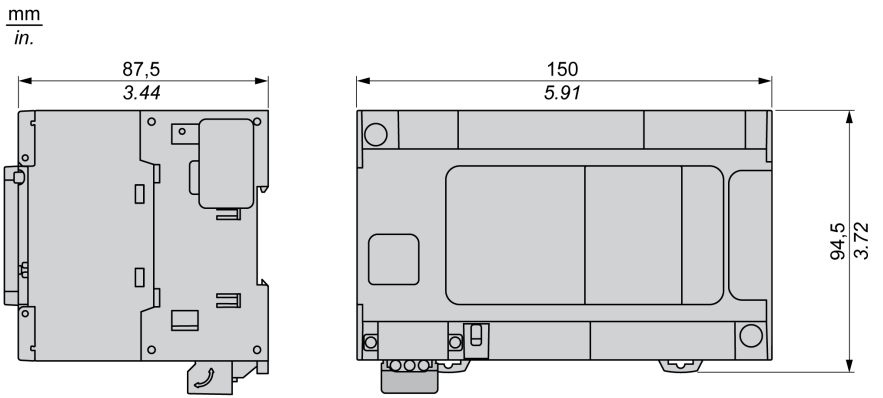

Chapter 5
TM241CE24R

TM241CE24R Presentation

Overview

TM241CE24R logic controller:

- 14 digital inputs
  - 8 fast inputs
  - 6 regular inputs
- 10 digital outputs
  - 4 fast outputs
  - 6 relay outputs (2 A)
- Communication port
  - 2 serial line ports
  - 1 Ethernet port
  - 1 USB mini-B programming port

Description

The following figure shows the different components of the TM241CE24R logic controller:

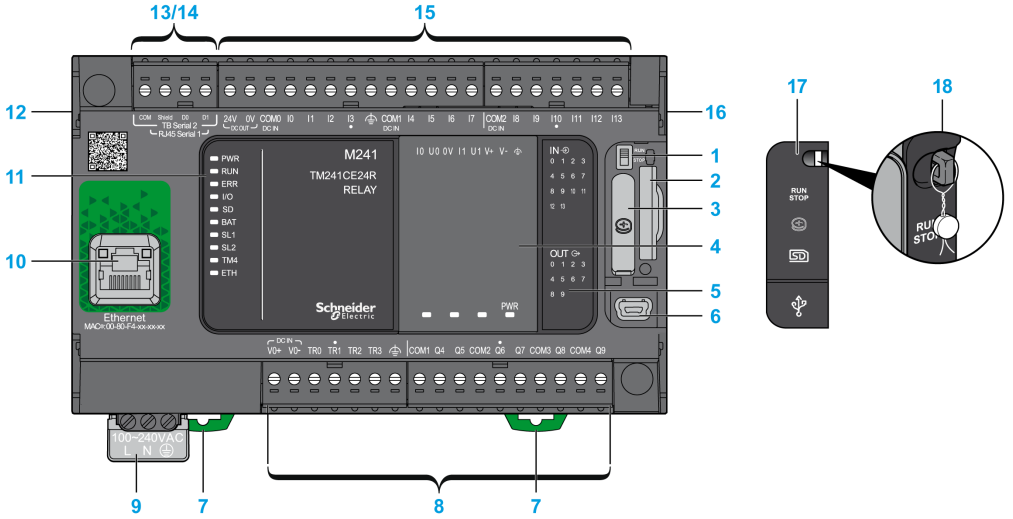

N°	Description	Refer to
1	Run/Stop switch	Run/Stop *(see page 57)*
2	SD card slot	SD Card *(see page 59)*
3	Battery holder	Real Time Clock (RTC) *(see page 44)*
4	Cartridge slot	–
5	LEDs for indicating I/O states	Digital Inputs Status LEDs *(see page 195)*
		Relay Outputs Status LEDs *(see page 203)* Fast Outputs Status LEDs *(see page 214)*
6	USB mini-B programming port / For terminal connection to a programming PC (SoMachine)	USB Mini-B Programming Port *(see page 229)*
7	Clip-on lock for 35 mm (1.38 in.) top hat section rail (DIN-rail)	Top Hat Section Rail *(see page 76)*
8	Embedded relay outputs	Relay Outputs *(see page 202)*
	Embedded fast transistor outputs	Fast Transistor Outputs *(see page 213)*
	Output removable terminal block	Rules for Removable Screw Terminal Block *(see page 85)*
9	100...240 Vac 50/60 Hz power supply	AC Power Supply Characteristics and Wiring *(see page 94)*
10	Ethernet port / Type RJ45 (RS-232 or RS-485)	Ethernet Port *(see page 226)*
11	Status LEDs	–
12	TM4 bus connector	TM4 Expansion Modules *(see page 27)*
13	Serial line port 1 / Type RJ45 (RS-232 or RS-485)	Serial Line 1 *(see page 231)*
14	Serial line port 2 / Screw terminal block type (RS-485)	Serial Line 2 *(see page 234)*
15	Embedded digital inputs	Embedded Digital Inputs *(see page 194)*
	Input removable terminal block	Rules for Removable Screw Terminal Block *(see page 85)*
16	TM3/TM2 bus connector	TM3 Expansion Modules *(see page 28)*
17	Protective cover (SD card slot, Run/Stop switch, and USB mini-B programming port)	–
18	Locking hook (Hook not included)	–

Status LEDs

The following figure shows the status LEDs:

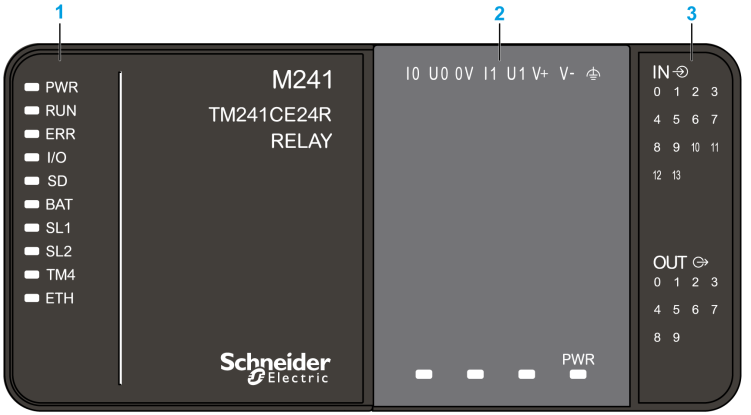

1 System status LEDs
2 Cartridge status LEDs (optional)
3 I/Os status LEDs

The following table describes the system status LEDs:

Label	Function Type	Color	Status	Description		
				Controller States[1]	Prg Port Communication	Application Execution
PWR	Power	Green	On	Indicates that power is applied.		
			Off	Indicates that power is removed.		
RUN	Machine status	Green	On	Indicates that the controller is running a valid application.		
			Flashing	Indicates that the controller has a valid application that is stopped.		
			1 flash	Indicates that the controller has paused at BREAKPOINT.		
			Off	Indicates that the controller is not programmed	-	-

Label	Function Type	Color	Status	Description		
				Controller States[1]	Prg Port Communication	Application Execution
ERR	Error	Red	On	An operating system error has been detected.	Restricted	No
			Fast flashing	The controller has detected an internal error.	Restricted	No
			Slow flashing	Indicates either that a minor error has been detected, if the RUN LED is illuminated, or that no application has been detected.	Yes	No
I/O	I/O error	Red	On	Indicates device errors on the embedded I/Os, serial line 1 or 2, SD card, cartridge, TM4 bus, TM3 bus, or Ethernet port.		
SD	SD card access	Green	On	Indicates that the SD card is being accessed		
BAT	Battery	Red	On	Indicates that the battery needs to be replaced.		
			Flashing	Indicates that the battery charge is low.		
SL1	Serial line 1	Green	On	Indicates the status of serial line 1 *(see page 233)*		
			Off	Indicates no serial communication		
SL2	Serial line 2	Green	On	Indicates the status of serial line 2 *(see page 235)*		
			Off	Indicates no serial communication		
TM4	Error on TM4 bus	Red	On	Indicates that an error has been detected on the TM4 bus		
			Off	Indicates that no error has been detected on the TM4 bus		
ETH	Ethernet port status	Green	On	Indicates that the ethernet port is connected and the IP address is defined.		
			3 flashes	Indicates that the ethernet port is not connected.		
			4 flashes	Indicates that the IP address is already in used.		
			5 flashes	Indicates that the module is waiting for BOOTP or DHCP sequence.		
			6 flashes	Indicates that the configured IP address is not valid.		

[1] For more information about the controller state description, refer to the M241 Logic Controller - Programming Guide.

Dimensions

The following figure shows the external dimensions of the logic controller:

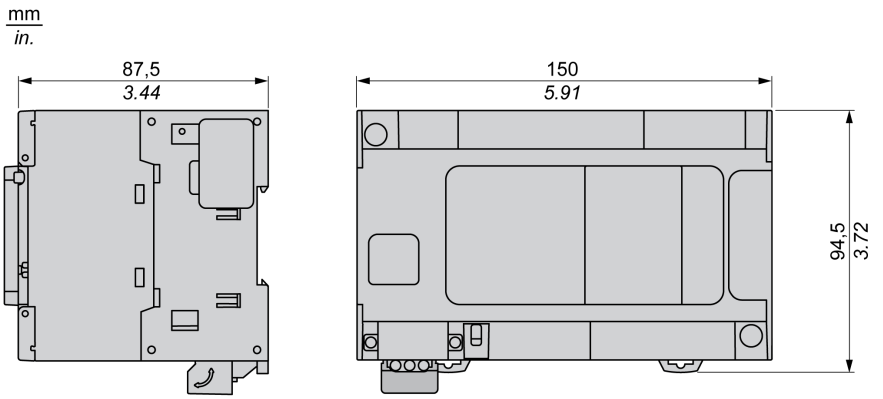

Chapter 6
TM241CEC24R

TM241CEC24R Presentation

Overview

TM241CEC24R logic controller has:

- 14 digital inputs
  - 8 fast inputs
  - 6 regular inputs
- 10 digital outputs
  - 4 fast outputs
  - 6 relay outputs (2 A)
- Communication port
  - 2 serial line ports
  - 1 Ethernet port
  - 1 CANopen port
  - 1 USB mini-B programming port

Description

The following figure shows the different components of the TM241CEC24R logic controller:

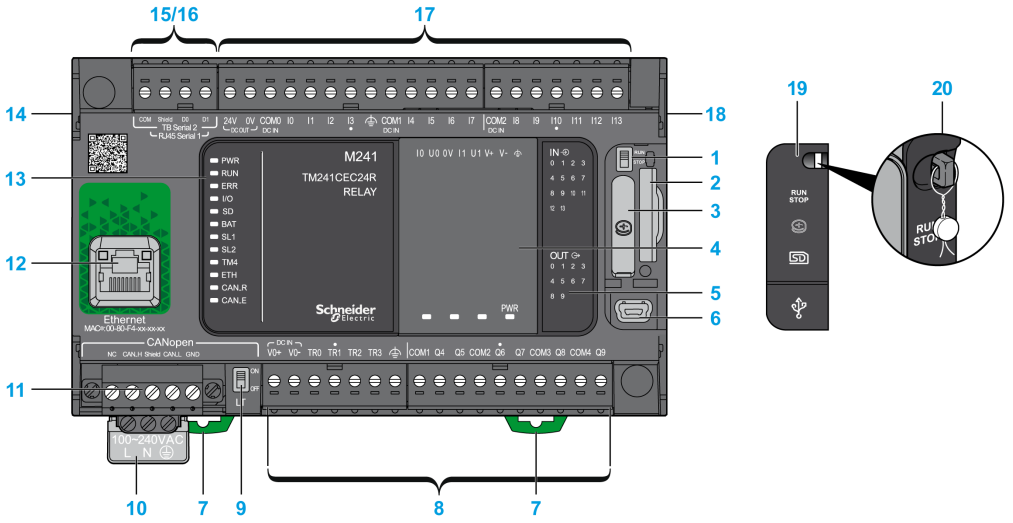

N°	Description	Refer to
1	Run/Stop switch	Run/Stop *(see page 57)*
2	SD card slot	SD Card *(see page 59)*
3	Battery holder	Real Time Clock (RTC) *(see page 44)*
4	Cartridge slot	–
5	LEDs for indicating I/O states	Digital Inputs Status LEDs *(see page 195)*
		Relay Outputs Status LEDs *(see page 203)* Fast Outputs Status LEDs *(see page 214)*
6	USB mini-B programming port / For terminal connection to a programming PC (SoMachine)	USB Mini-B Programming Port *(see page 229)*
7	Clip-on lock for 35 mm (1.38 in.) top hat section rail (DIN-rail)	Top Hat Section Rail *(see page 76)*
8	Embedded relay outputs	Relay Outputs *(see page 202)*
	Embedded fast transistor outputs	Fast Transistor Outputs *(see page 213)*
	Output removable terminal block	Rules for Removable Screw Terminal Block *(see page 85)*
9	CANopen Line termination switch	CANopen Port *(see page 222)*
10	100...240 Vac 50/60 Hz power supply	AC Power Supply Characteristics and Wiring *(see page 94)*
11	CANopen port / Screw terminal block type	–
12	Ethernet port / Type RJ45 (RS-232 or RS-485)	Ethernet Port *(see page 226)*
13	Status LEDs	–
14	TM4 bus connector	–
15	Serial line port 1 / Type RJ45 (RS-232 or RS-485)	Serial Line 1 *(see page 231)*
16	Serial line port 2 / Screw terminal block type (RS-485)	Serial Line 2 *(see page 234)*
17	Embedded digital inputs	Embedded Digital Inputs *(see page 194)*
	Input removable terminal block	Rules for Removable Screw Terminal Block *(see page 85)*
18	TM3/TM2 bus connector	TM3 Expansion Modules *(see page 28)*
19	Protective cover (SD card slot, Run/Stop switch, and USB mini-B programming port)	–
20	Locking hook (Hook not included)	–

Status LEDs

The following figure shows the status LEDs:

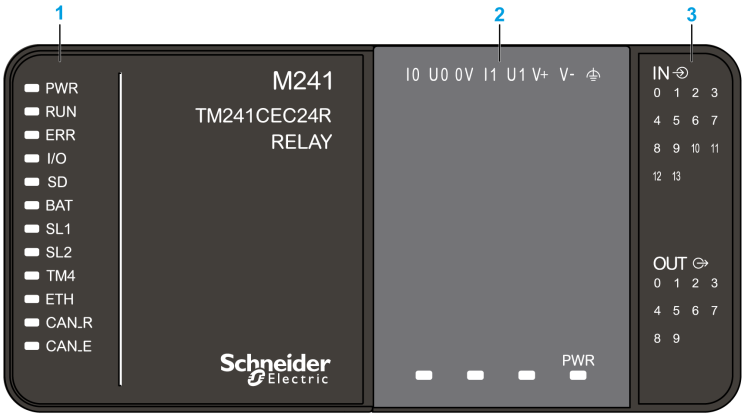

1 System status LEDs
2 Cartridge status LEDs (optional)
3 I/Os status LEDs

The following table describes the system status LEDs:

Label	Function Type	Color	Status	Description		
				Controller States[1]	Prg Port Communication	Application Execution
PWR	Power	Green	On	Indicates that power is applied.		
			Off	Indicates that power is removed.		
RUN	Machine status	Green	On	Indicates that the controller is running a valid application.		
			Flashing	Indicates that the controller has a valid application that is stopped.		
			1 flash	Indicates that the controller has paused at BREAKPOINT.		
			Off	Indicates that the controller is not programmed	-	-

Label	Function Type	Color	Status	Description		
				Controller States[1]	Prg Port Communication	Application Execution
ERR	Error	Red	On	An operating system error has been detected.	Restricted	No
			Fast flashing	The controller has detected an internal error.	Restricted	No
			Slow flashing	Indicates either that a minor error has been detected, if the RUN LED is illuminated, or that no application has been detected.	Yes	No
I/O	I/O error	Red	On	Indicates device errors on the embedded I/Os, serial line 1 or 2, SD card, cartridge, TM4 bus, TM3 bus, Ethernet port or CANopen port.		
SD	SD card access	Green	On	Indicates that the SD card is being accessed		
BAT	Battery	Red	On	Indicates that the battery needs to be replaced.		
			Flashing	Indicates that the battery charge is low.		
SL1	Serial line 1	Green	On	Indicates the status of serial line 1 *(see page 233)*		
			Off	Indicates no serial communication		
SL2	Serial line 2	Green	On	Indicates the status of serial line 2 *(see page 235)*		
			Off	Indicates no serial communication		
TM4	Error on TM4 bus	Red	On	Indicates that an error has been detected on the TM4 bus		
			Off	Indicates that no error has been detected on the TM4 bus		
ETH	Ethernet port status	Green	On	Indicates that the ethernet port is connected and the IP address is defined.		
			3 flashes	Indicates that the ethernet port is not connected.		
			4 flashes	Indicates that the IP address is already in used.		
			5 flashes	Indicates that the module is waiting for BOOTP or DHCP sequence.		
			6 flashes	Indicates that the configured IP address is not valid.		

Label	Function Type	Color	Status	Description		
				Controller States[1]	Prg Port Communication	Application Execution
CAN R	CANopen running status	Green	On	Indicates that the CANopen bus is operational.		
			Off	Indicates that the CANopen master is configured.		
			Flashing	Indicates that the CANopen bus is being initialized.		
			1 flash per second	Indicates that the CANopen bus is stopped.		
CAN E	CANopen error	Red	On	Indicates that the CANopen bus is stopped (BUS OFF).		
			Off	Indicates no CANopen detected error.		
			Flashing	Indicates that the CANopen bus is not valid.		
			1 flash per second	Indicates that the controller has detected that the maximum number of error frames has been reached or exceeded.		
			2 flashes per second	Indicates that the controller has detected either a Node Guarding or a Heartbeat event.		

[1] For more information about the controller state description, refer to the M241 Logic Controller - Programming Guide.

Dimensions

The following figure shows the external dimensions of the logic controller:

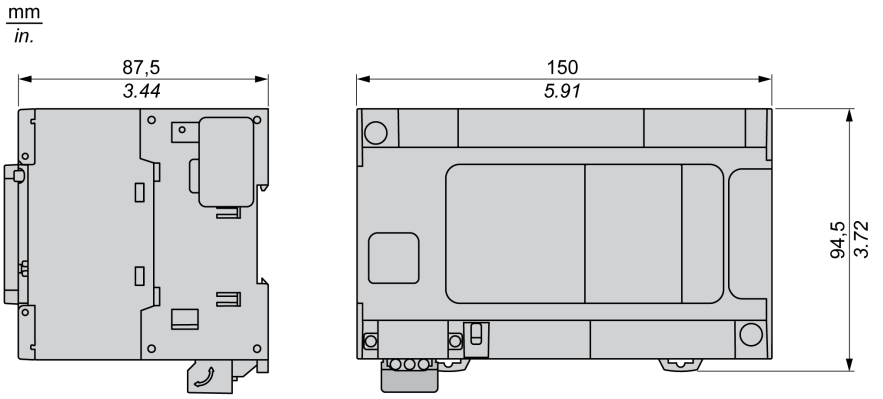

Chapter 7
TM241C24T

TM241C24T Presentation

Overview

TM241C24T logic controller:

- 14 digital inputs
  - 8 fast inputs
  - 6 regular inputs
- 10 digital outputs
  - 4 fast outputs
  - 6 regular outputs
- Communication port
  - 2 serial line ports
  - 1 USB mini-B programming port

Description

The following figure shows the different components of the TM241C24T logic controller:

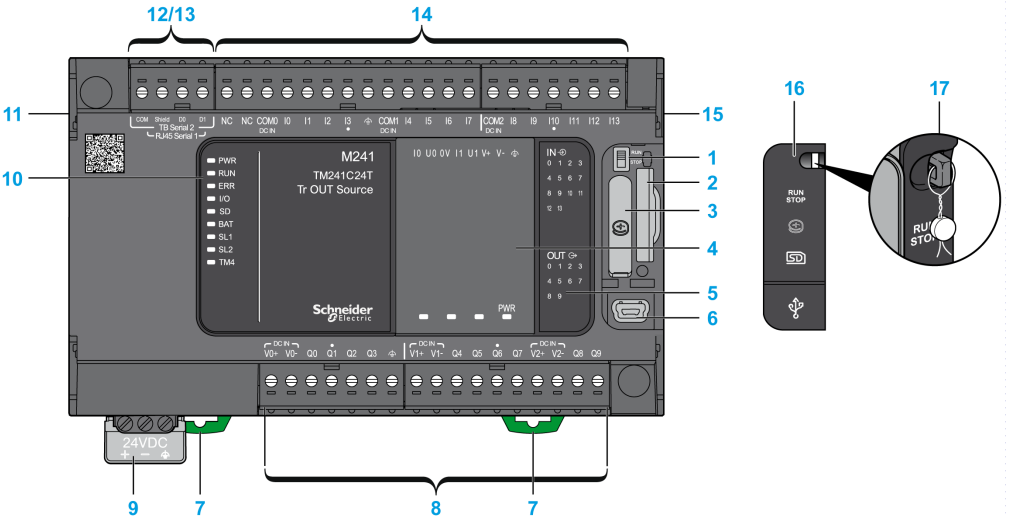

N°	Description	Refer to
1	Run/Stop switch	Run/Stop *(see page 57)*
2	SD card slot	SD Card *(see page 59)*
3	Battery holder	Real Time Clock (RTC) *(see page 44)*
4	Cartridge slot	–
5	LEDs for indicating I/O states	Digital Inputs Status LEDs *(see page 195)*
		Transistor Outputs Status LEDs *(see page 209)* Fast Outputs Status LEDs *(see page 214)*
6	USB mini-B programming port / For terminal connection to a programming PC (SoMachine)	USB Mini-B Programming Port *(see page 229)*
7	Clip-on lock for 35 mm (1.38 in.) top hat section rail (DIN-rail)	Top Hat Section Rail *(see page 76)*
8	Embedded regular transistor outputs	Regular Transistor Outputs *(see page 208)*
	Embedded fast transistor outputs	Fast Transistor Outputs *(see page 213)*
	Output removable terminal block	Rules for Removable Screw Terminal Block *(see page 85)*
9	24 Vdc power supply	DC Power supply Characteristics and Wiring *(see page 90)*
10	Status LEDs	–
11	TM4 bus connector	TM4 Expansion Modules *(see page 27)*
12	Serial line port 1 / Type RJ45 (RS-232 or RS-485)	Serial Line 1 *(see page 231)*
13	Serial line port 2 / Screw terminal block type (RS-485)	Serial Line 2 *(see page 234)*
14	Embedded digital inputs	Embedded Digital Inputs *(see page 194)*
	Input removable terminal block	Rules for Removable Screw Terminal Block *(see page 85)*
15	TM3/TM2 bus connector	TM3 Expansion Modules *(see page 28)*
16	Protective cover (SD card slot, Run/Stop switch, and USB mini-B programming port)	–
17	Locking hook (Hook not included)	–

Status LEDs

The following figure shows the status LEDs:

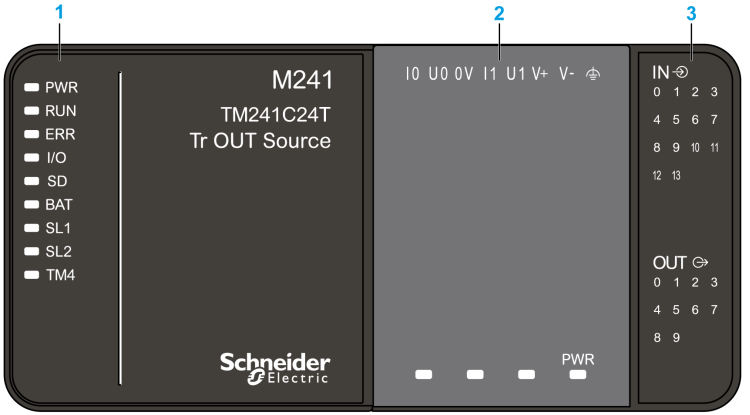

1 System status LEDs
2 Cartridge status LEDs (optional)
3 I/Os status LEDs

The following table describes the system status LEDs:

Label	Function Type	Color	Status	Description		
				Controller States[1]	Prg Port Communication	Application Execution
PWR	Power	Green	On	Indicates that power is applied.		
			Off	Indicates that power is removed.		
RUN	Machine status	Green	On	Indicates that the controller is running a valid application.		
			Flashing	Indicates that the controller has a valid application that is stopped.		
			1 flash	Indicates that the controller has paused at BREAKPOINT.		
			Off	Indicates that the controller is not programmed	-	-

Label	Function Type	Color	Status	Description		
				Controller States[1]	Prg Port Communication	Application Execution
ERR	Error	Red	On	Indicates that an operating system error has been detected.	Restricted	No
			Fast flashing	Indicates that the controller has detected an internal error.	Restricted	No
			Slow flashing	Indicates either that a minor error has been detected, if the RUN LED is illuminated, or that no application has been detected.	Yes	No
I/O	I/O error	Red	On	Indicates device errors on the embedded I/Os, serial line 1 or 2, SD card, cartridge, TM4 bus, TM3 bus.		
SD	SD card access	Green	On	Indicates that the SD card is being accessed		
BAT	Battery	Red	On	Indicates that the battery needs to be replaced.		
			Flashing	Indicates that the battery charge is low.		
SL1	Serial line 1	Green	On	Indicates the status of serial line 1 *(see page 233)*		
			Off	Indicates no serial communication		
SL2	Serial line 2	Green	On	Indicates the status of serial line 2 *(see page 235)*		
			Off	Indicates no serial communication		
TM4	Error on TM4 bus	Red	On	Indicates that an error has been detected on the TM4 bus		
			Off	Indicates that no error has been detected on the TM4 bus		

[1] For more information about the controller state description, refer to the M241 Logic Controller - Programming Guide.

Dimensions

The following figure shows the external dimensions of the logic controller:

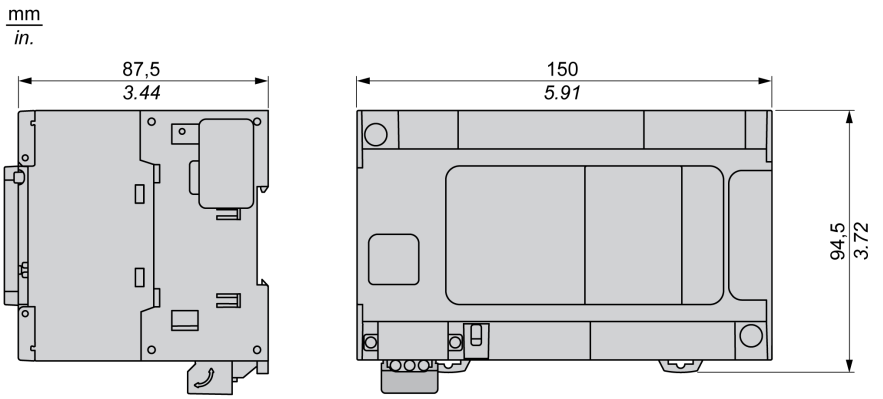

Chapter 8
TM241CE24T

TM241CE24T Presentation

Overview

TM241CE24T logic controller:

- 14 digital inputs
  - 8 fast inputs
  - 6 regular inputs
- 10 digital outputs
  - 4 fast outputs
  - 6 regular outputs
- Communication port
  - 2 serial line ports
  - 1 Ethernet port
  - 1 USB mini-B programming port

Description

The following figure shows the different components of the TM241CE24T logic controller:

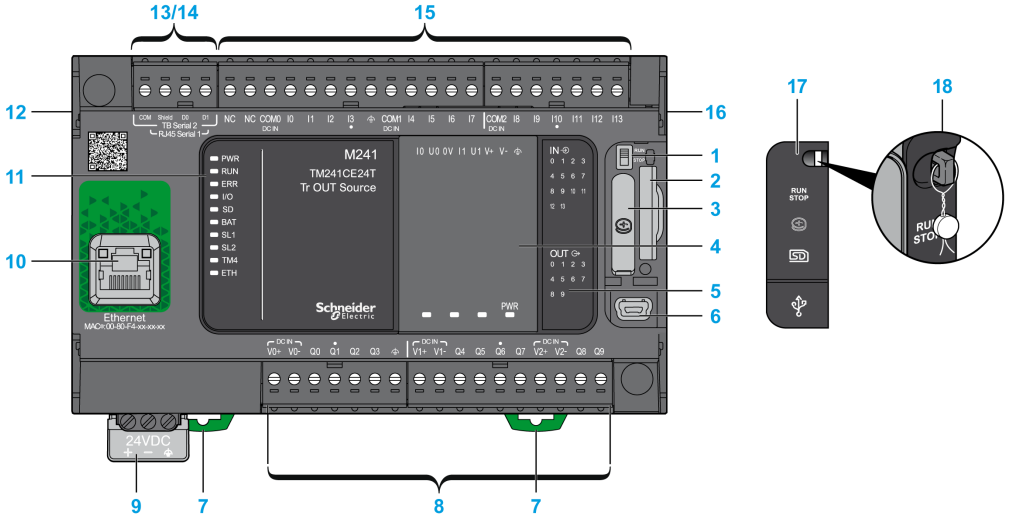

N°	Description	Refer to
1	Run/Stop switch	Run/Stop *(see page 57)*
2	SD card slot	SD Card *(see page 59)*
3	Battery holder	Real Time Clock (RTC) *(see page 44)*
4	Cartridge slot	–
5	LEDs for indicating I/O states	Digital Inputs Status LEDs *(see page 195)*
		Transistor Outputs Status LEDs *(see page 209)* Fast Outputs Status LEDs *(see page 214)*
6	USB mini-B programming port / For terminal connection to a programming PC (SoMachine)	USB Mini-B Programming Port *(see page 229)*
7	Clip-on lock for 35 mm (1.38 in.) top hat section rail (DIN-rail)	Top Hat Section Rail *(see page 76)*
8	Embedded regular transistor outputs	Regular Transistor Outputs *(see page 208)*
	Embedded fast transistor outputs	Fast Transistor Outputs *(see page 213)*
	Output removable terminal block	Rules for Removable Screw Terminal Block *(see page 85)*
9	24 Vdc power supply	DC Power supply Characteristics and Wiring *(see page 90)*
10	Ethernet port / Type RJ45 (RS-232 or RS-485)	Ethernet Port *(see page 226)*
11	Status LEDs	–
12	TM4 bus connector	TM4 Expansion Modules *(see page 27)*
13	Serial line port 1 / Type RJ45 (RS-232 or RS-485)	Serial Line 1 *(see page 231)*
14	Serial line port 2 / Screw terminal block type (RS-485)	Serial Line 2 *(see page 234)*
15	Embedded digital inputs	Embedded Digital Inputs *(see page 194)*
	Input removable terminal block	Rules for Removable Screw Terminal Block *(see page 85)*
16	TM3/TM2 bus connector	TM3 Expansion Modules *(see page 28)*
17	Protective cover (SD card slot, Run/Stop switch, and USB mini-B programming port)	–
18	Locking hook (Hook not included)	–

Status LEDs

The following figure shows the status LEDs:

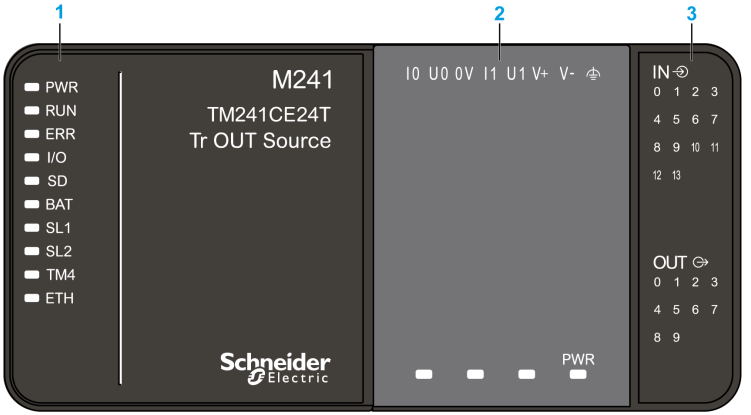

1 System status LEDs
2 Cartridge status LEDs (optional)
3 I/Os status LEDs

The following table describes the system status LEDs:

Label	Function Type	Color	Status	Description		
				Controller States[1]	Prg Port Communication	Application Execution
PWR	Power	Green	On	Indicates that power is applied.		
			Off	Indicates that power is removed.		
RUN	Machine status	Green	On	Indicates that the controller is running a valid application.		
			Flashing	Indicates that the controller has a valid application that is stopped.		
			1 flash	Indicates that the controller has paused at BREAKPOINT.		
			Off	Indicates that the controller is not programmed	-	-

Label	Function Type	Color	Status	Description		
				Controller States[1]	Prg Port Communication	Application Execution
ERR	Error	Red	On	An operating system error has been detected.	Restricted	No
			Fast flashing	The controller has detected an internal error.	Restricted	No
			Slow flashing	Indicates either that a minor error has been detected, if the RUN LED is illuminated, or that no application has been detected.	Yes	No
I/O	I/O error	Red	On	Indicates device errors on the embedded I/Os, serial line 1 or 2, SD card, cartridge, TM4 bus, TM3 bus, or Ethernet port.		
SD	SD card access	Green	On	Indicates that the SD card is being accessed		
BAT	Battery	Red	On	Indicates that the battery needs to be replaced.		
			Flashing	Indicates that the battery charge is low.		
SL1	Serial line 1	Green	On	Indicates the status of serial line 1 *(see page 233)*		
			Off	Indicates no serial communication		
SL2	Serial line 2	Green	On	Indicates the status of serial line 2 *(see page 235)*		
			Off	Indicates no serial communication		
TM4	Error on TM4 bus	Red	On	Indicates that an error has been detected on the TM4 bus		
			Off	Indicates that no error has been detected on the TM4 bus		
ETH	Ethernet port status	Green	On	Indicates that the ethernet port is connected and the IP address is defined.		
			3 flashes	Indicates that the ethernet port is not connected.		
			4 flashes	Indicates that the IP address is already in used.		
			5 flashes	Indicates that the module is waiting for BOOTP or DHCP sequence.		
			6 flashes	Indicates that the configured IP address is not valid.		

[1] For more information about the controller state description, refer to the M241 Logic Controller - Programming Guide.

Dimensions

The following figure shows the external dimensions of the logic controller:

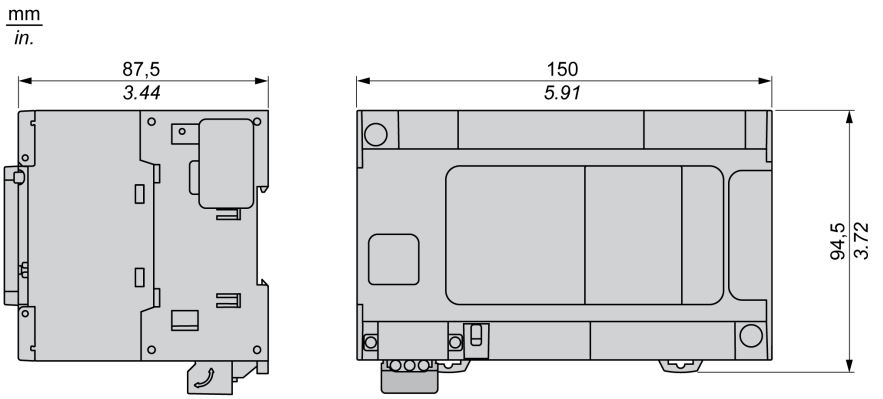

Chapter 9
TM241CEC24T

TM241CEC24T Presentation

Overview

TM241CEC24T logic controller:

- 14 digital inputs
  - 8 fast inputs
  - 6 regular inputs
- 10 digital outputs
  - 4 fast outputs
  - 6 regular outputs
- Communication port
  - 2 serial line ports
  - 1 Ethernet port
  - 1 CANopen port
  - 1 USB mini-B programming port

Description

The following figure shows the different components of the TM241CEC24T logic controller:

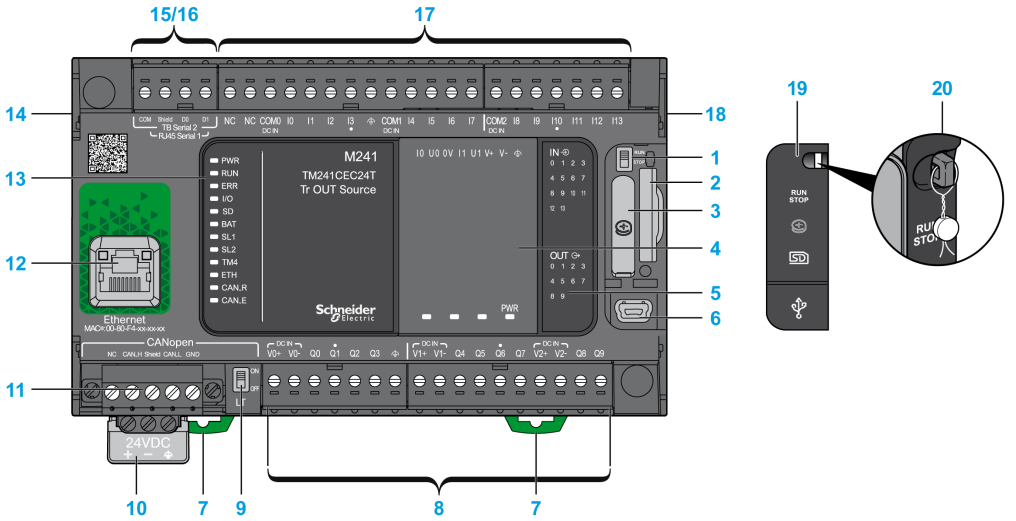

N°	Description	Refer to
1	Run/Stop switch	Run/Stop *(see page 57)*
2	SD card slot	SD Card *(see page 59)*
3	Battery holder	Real Time Clock (RTC) *(see page 44)*
4	Cartridge slot	–
5	LEDs for indicating I/O states	Digital Inputs Status LEDs *(see page 195)*
		Transistor Outputs Status LEDs *(see page 209)* Fast Outputs Status LEDs *(see page 214)*
6	USB mini-B programming port / For terminal connection to a programming PC (SoMachine)	USB Mini-B Programming Port *(see page 229)*
7	Clip-on lock for 35 mm (1.38 in.) top hat section rail (DIN-rail)	Top Hat Section Rail *(see page 76)*
8	Embedded regular transistor outputs	Regular Transistor Outputs *(see page 208)*
	Embedded fast transistor outputs	Fast Transistor Outputs *(see page 213)*
	Output removable terminal block	Rules for Removable Screw Terminal Block *(see page 85)*
9	CANopen Line termination switch	CANopen Port *(see page 222)*
10	24 Vdc power supply	DC Power supply Characteristics and Wiring *(see page 90)*
11	CANopen port / Screw terminal block type	–
12	Ethernet port / Type RJ45 (RS-232 or RS-485)	Ethernet Port *(see page 226)*
13	Status LEDs	–
14	TM4 bus connector	TM4 Expansion Modules *(see page 27)*
15	Serial line port 1 / Type RJ45 (RS-232 or RS-485)	Serial Line 1 *(see page 231)*
16	Serial line port 2 / Screw terminal block type (RS-485)	Serial Line 2 *(see page 234)*
17	Embedded digital inputs	Embedded Digital Inputs *(see page 194)*
	Input removable terminal block	Rules for Removable Screw Terminal Block *(see page 85)*
18	TM3/TM2 bus connector	TM3 Expansion Modules *(see page 28)*
19	Protective cover (SD card slot, Run/Stop switch, and USB mini-B programming port)	–
20	Locking hook (Hook not included)	–

Status LEDs

The following figure shows the status LEDs:

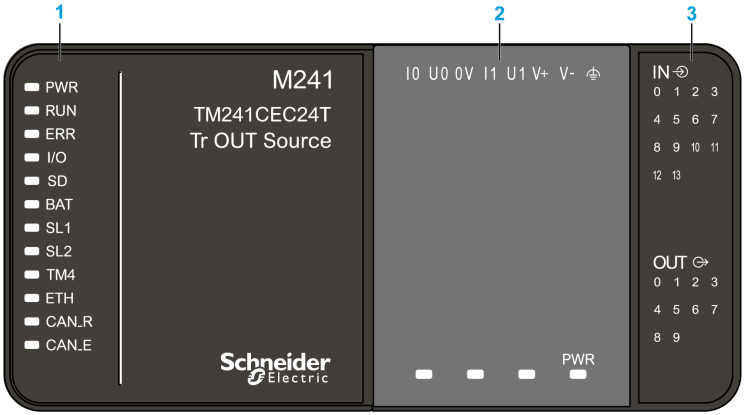

1 System status LEDs
2 Cartridge status LEDs (optional)
3 I/Os status LEDs

The following table describes the system status LEDs:

Label	Function Type	Color	Status	Description		
				Controller States[1]	Prg Port Communication	Application Execution
PWR	Power	Green	On	Indicates that power is applied.		
			Off	Indicates that power is removed.		
RUN	Machine status	Green	On	Indicates that the controller is running a valid application.		
			Flashing	Indicates that the controller has a valid application that is stopped.		
			1 flash	Indicates that the controller has paused at BREAKPOINT.		
			Off	Indicates that the controller is not programmed	-	-

Label	Function Type	Color	Status	Description		
				Controller States[1]	Prg Port Communication	Application Execution
ERR	Error	Red	On	An operating system error has been detected.	Restricted	No
			Fast flashing	The controller has detected an internal error.	Restricted	No
			Slow flashing	Indicates either that a minor error has been detected, if the RUN LED is illuminated, or that no application has been detected.	Yes	No
I/O	I/O error	Red	On	Indicates device errors on the embedded I/Os, serial line 1 or 2, SD card, cartridge, TM4 bus, TM3 bus, Ethernet port or CANopen port.		
SD	SD card access	Green	On	Indicates that the SD card is being accessed		
BAT	Battery	Red	On	Indicates that the battery needs to be replaced.		
			Flashing	Indicates that the battery charge is low.		
SL1	Serial line 1	Green	On	Indicates the status of serial line 1 *(see page 233)*		
			Off	Indicates no serial communication		
SL2	Serial line 2	Green	On	Indicates the status of serial line 2 *(see page 235)*		
			Off	Indicates no serial communication		
TM4	Error on TM4 bus	Red	On	Indicates that an error has been detected on the TM4 bus		
			Off	Indicates that no error has been detected on the TM4 bus		
ETH	Ethernet port status	Green	On	Indicates that the ethernet port is connected and the IP address is defined.		
			3 flashes	Indicates that the ethernet port is not connected.		
			4 flashes	Indicates that the IP address is already in used.		
			5 flashes	Indicates that the module is waiting for BOOTP or DHCP sequence.		
			6 flashes	Indicates that the configured IP address is not valid.		

Label	Function Type	Color	Status	Description		
				Controller States[1]	Prg Port Communication	Application Execution
CAN R	CANopen running status	Green	On	Indicates that the CANopen bus is operational.		
			Off	Indicates that the CANopen master is configured.		
			Flashing	Indicates that the CANopen bus is being initialized.		
			1 flash per second	Indicates that the CANopen bus is stopped.		
CAN E	CANopen error	Red	On	Indicates that the CANopen bus is stopped (BUS OFF).		
			Off	Indicates no CANopen detected error.		
			Flashing	Indicates that the CANopen bus is not valid.		
			1 flash per second	Indicates that the controller has detected that the maximum number of error frames has been reached or exceeded.		
			2 flashes per second	Indicates that the controller has detected either a Node Guarding or a Heartbeat event.		

[1] For more information about the controller state description, refer to the M241 Logic Controller - Programming Guide.

Dimensions

The following figure shows the external dimensions of the logic controller:

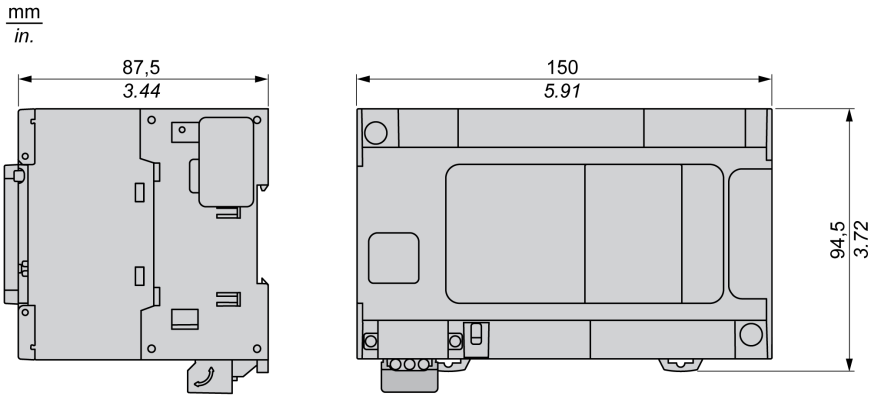

Chapter 10
TM241C24U

TM241C24U Presentation

Overview

TM241C24U logic controller:

- 14 digital inputs
  - 8 fast inputs
  - 6 regular inputs
- 10 digital outputs
  - 4 fast outputs
  - 6 regular outputs
- Communication port
  - 2 serial line ports
  - 1 USB mini-B programming port

Description

The following figure shows the different components of the TM241C24U logic controller:

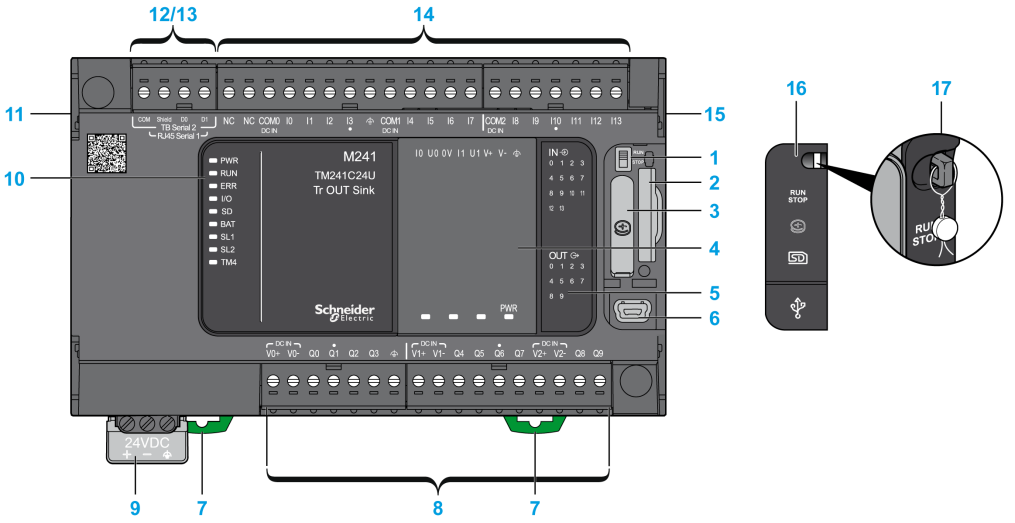

N°	Description	Refer to
1	Run/Stop switch	Run/Stop *(see page 57)*
2	SD card slot	SD Card *(see page 59)*
3	Battery holder	Real Time Clock (RTC) *(see page 44)*
4	Cartridge slot	–
5	LEDs for indicating I/O states	Digital Inputs Status LEDs *(see page 195)*
		Transistor Outputs Status LEDs *(see page 209)* Fast Outputs Status LEDs *(see page 214)*
6	USB mini-B programming port / For terminal connection to a programming PC (SoMachine)	USB Mini-B Programming Port *(see page 229)*
7	Clip-on lock for 35 mm (1.38 in.) top hat section rail (DIN-rail)	Top Hat Section Rail *(see page 76)*
8	Embedded regular transistor outputs	Regular Transistor Outputs *(see page 208)*
	Embedded fast transistor outputs	Fast Transistor Outputs *(see page 213)*
	Output removable terminal block	Rules for Removable Screw Terminal Block *(see page 85)*
9	24 Vdc power supply	DC Power supply Characteristics and Wiring *(see page 90)*
10	Status LEDs	–
11	TM4 bus connector	TM4 Expansion Modules *(see page 27)*
12	Serial line port 1 / Type RJ45 (RS-232 or RS-485)	Serial Line 1 *(see page 231)*
13	Serial line port 2 / Screw terminal block type (RS-485)	Serial Line 2 *(see page 234)*
14	Embedded digital inputs	Embedded Digital Inputs *(see page 194)*
	Input removable terminal block	Rules for Removable Screw Terminal Block *(see page 85)*
15	TM3/TM2 bus connector	TM3 Expansion Modules *(see page 28)*
16	Protective cover (SD card slot, Run/Stop switch, and USB mini-B programming port)	–
17	Locking hook (Hook not included)	–

Status LEDs

The following figure shows the status LEDs:

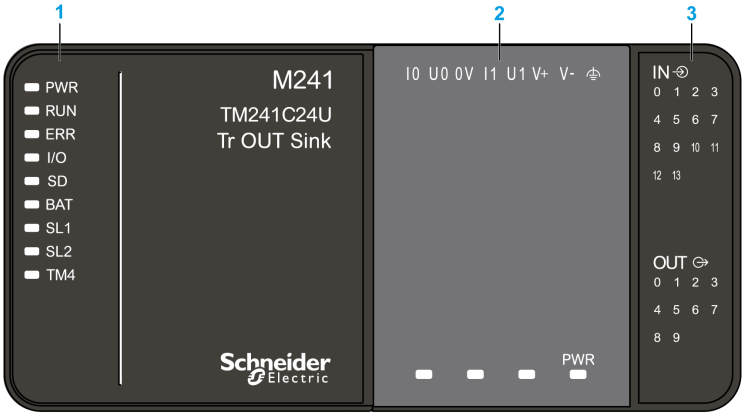

1 System status LEDs
2 Cartridge status LEDs (optional)
3 I/Os status LEDs

The following table describes the system status LEDs:

Label	Function Type	Color	Status	Description		
				Controller States[1]	Prg Port Communication	Application Execution
PWR	Power	Green	On	Indicates that power is applied.		
			Off	Indicates that power is removed.		
RUN	Machine status	Green	On	Indicates that the controller is running a valid application.		
			Flashing	Indicates that the controller has a valid application that is stopped.		
			1 flash	Indicates that the controller has paused at BREAKPOINT.		
			Off	Indicates that the controller is not programmed	-	-

Label	Function Type	Color	Status	Description		
				Controller States[1]	Prg Port Communication	Application Execution
ERR	Error	Red	On	Indicates that an operating system error has been detected.	Restricted	No
			Fast flashing	Indicates that the controller has detected an internal error.	Restricted	No
			Slow flashing	Indicates either that a minor error has been detected, if the RUN LED is illuminated, or that no application has been detected.	Yes	No
I/O	I/O error	Red	On	Indicates device errors on the embedded I/Os, serial line 1 or 2, SD card, cartridge, TM4 bus, TM3 bus.		
SD	SD card access	Green	On	Indicates that the SD card is being accessed		
BAT	Battery	Red	On	Indicates that the battery needs to be replaced.		
			Flashing	Indicates that the battery charge is low.		
SL1	Serial line 1	Green	On	Indicates the status of serial line 1 *(see page 233)*		
			Off	Indicates no serial communication		
SL2	Serial line 2	Green	On	Indicates the status of serial line 2 *(see page 235)*		
			Off	Indicates no serial communication		
TM4	Error on TM4 bus	Red	On	Indicates that an error has been detected on the TM4 bus		
			Off	Indicates that no error has been detected on the TM4 bus		

[1] For more information about the controller state description, refer to the M241 Logic Controller - Programming Guide.

Dimensions

The following figure shows the external dimensions of the logic controller:

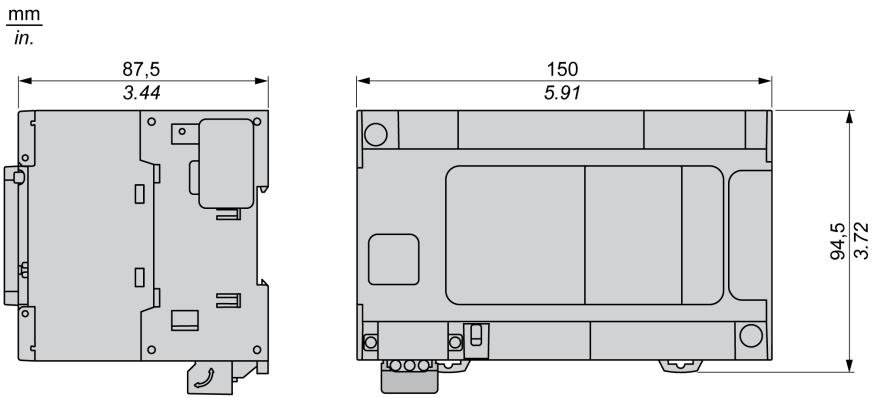

Chapter 11
TM241CE24U

TM241CE24U Presentation

Overview

TM241CE24U logic controller:

- 14 digital inputs
  - 8 fast inputs
  - 6 regular inputs
- 10 digital outputs
  - 4 fast outputs
  - 6 regular outputs
- Communication port
  - 2 serial line ports
  - 1 Ethernet port
  - 1 USB mini-B programming port

Description

The following figure shows the different components of the TM241CE24U logic controller:

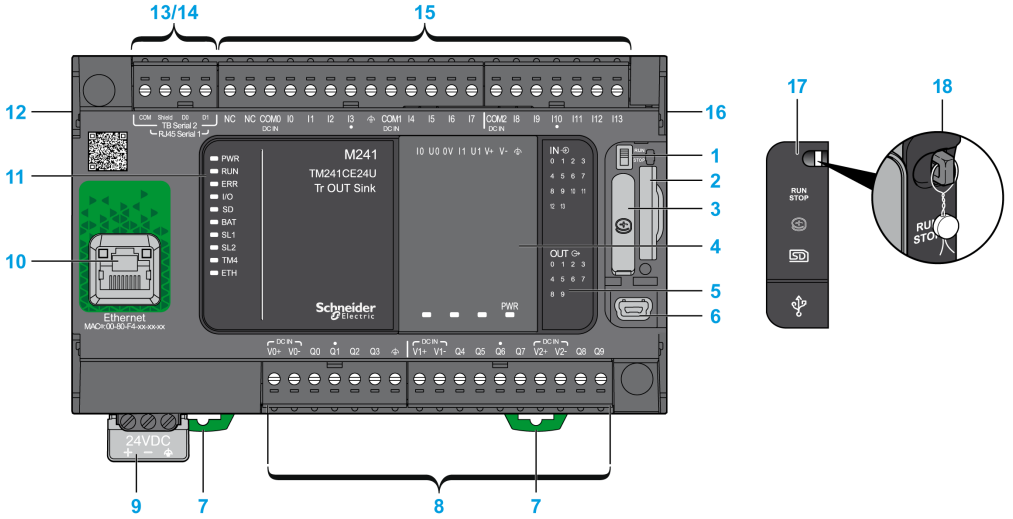

N°	Description	Refer to
1	Run/Stop switch	Run/Stop *(see page 57)*
2	SD card slot	SD Card *(see page 59)*
3	Battery holder	Real Time Clock (RTC) *(see page 44)*
4	Cartridge slot	–
5	LEDs for indicating I/O states	Digital Inputs Status LEDs *(see page 195)*
		Transistor Outputs Status LEDs *(see page 209)* Fast Outputs Status LEDs *(see page 214)*
6	USB mini-B programming port / For terminal connection to a programming PC (SoMachine)	USB Mini-B Programming Port *(see page 229)*
7	Clip-on lock for 35 mm (1.38 in.) top hat section rail (DIN-rail)	Top Hat Section Rail *(see page 76)*
8	Embedded regular transistor outputs	Regular Transistor Outputs *(see page 208)*
	Embedded fast transistor outputs	Fast Transistor Outputs *(see page 213)*
	Output removable terminal block	Rules for Removable Screw Terminal Block *(see page 85)*
9	24 Vdc power supply	DC Power supply Characteristics and Wiring *(see page 90)*
10	Ethernet port / Type RJ45 (RS-232 or RS-485)	Ethernet Port *(see page 226)*
11	Status LEDs	–
12	TM4 bus connector	TM4 Expansion Modules *(see page 27)*
13	Serial line port 1 / Type RJ45 (RS-232 or RS-485)	Serial Line 1 *(see page 231)*
14	Serial line port 2 / Screw terminal block type (RS-485)	Serial Line 2 *(see page 234)*
15	Embedded digital inputs	Embedded Digital Inputs *(see page 194)*
	Input removable terminal block	Rules for Removable Screw Terminal Block *(see page 85)*
16	TM3/TM2 bus connector	TM3 Expansion Modules *(see page 28)*
17	Protective cover (SD card slot, Run/Stop switch, and USB mini-B programming port)	–
18	Locking hook (Hook not included)	–

Status LEDs

The following figure shows the status LEDs:

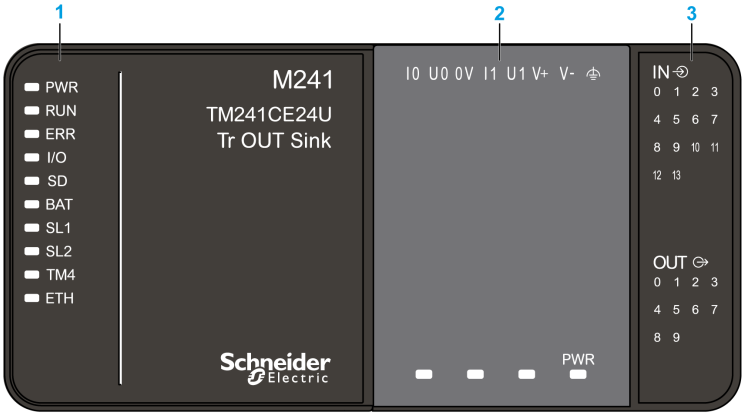

1 System status LEDs
2 Cartridge status LEDs (optional)
3 I/Os status LEDs

The following table describes the system status LEDs:

Label	Function Type	Color	Status	Description		
				Controller States[1]	Prg Port Communication	Application Execution
PWR	Power	Green	On	Indicates that power is applied.		
			Off	Indicates that power is removed.		
RUN	Machine status	Green	On	Indicates that the controller is running a valid application.		
			Flashing	Indicates that the controller has a valid application that is stopped.		
			1 flash	Indicates that the controller has paused at BREAKPOINT.		
			Off	Indicates that the controller is not programmed	-	-

Label	Function Type	Color	Status	Description		
				Controller States[1]	Prg Port Communication	Application Execution
ERR	Error	Red	On	An operating system error has been detected.	Restricted	No
			Fast flashing	The controller has detected an internal error.	Restricted	No
			Slow flashing	Indicates either that a minor error has been detected, if the RUN LED is illuminated, or that no application has been detected.	Yes	No
I/O	I/O error	Red	On	Indicates device errors on the embedded I/Os, serial line 1 or 2, SD card, cartridge, TM4 bus, TM3 bus, Ethernet port or CANopen port.		
SD	SD card access	Green	On	Indicates that the SD card is being accessed		
BAT	Battery	Red	On	Indicates that the battery needs to be replaced.		
			Flashing	Indicates that the battery charge is low.		
SL1	Serial line 1	Green	On	Indicates the status of serial line 1 *(see page 233)*		
			Off	Indicates no serial communication		
SL2	Serial line 2	Green	On	Indicates the status of serial line 2 *(see page 235)*		
			Off	Indicates no serial communication		
TM4	Error on TM4 bus	Red	On	Indicates that an error has been detected on the TM4 bus		
			Off	Indicates that no error has been detected on the TM4 bus		
ETH	Ethernet port status	Green	On	Indicates that the ethernet port is connected and the IP address is defined.		
			3 flashes	Indicates that the ethernet port is not connected.		
			4 flashes	Indicates that the IP address is already in used.		
			5 flashes	Indicates that the module is waiting for BOOTP or DHCP sequence.		
			6 flashes	Indicates that the configured IP address is not valid.		

Label	Function Type	Color	Status	Description		
				Controller States[1]	Prg Port Communication	Application Execution
CAN R	CANopen running status	Green	On	Indicates that the CANopen bus is operational.		
			Off	Indicates that the CANopen master is configured.		
			Flashing	Indicates that the CANopen bus is being initialized.		
			1 flash per second	Indicates that the CANopen bus is stopped.		
CAN E	CANopen error	Red	On	Indicates that the CANopen bus is stopped (BUS OFF).		
			Off	Indicates no CANopen detected error.		
			Flashing	Indicates that the CANopen bus is not valid.		
			1 flash per second	Indicates that the controller has detected that the maximum number of error frames has been reached or exceeded.		
			2 flashes per second	Indicates that the controller has detected either a Node Guarding or a Heartbeat event.		

[1] For more information about the controller state description, refer to the M241 Logic Controller - Programming Guide.

Dimensions

The following figure shows the external dimensions of the logic controller:

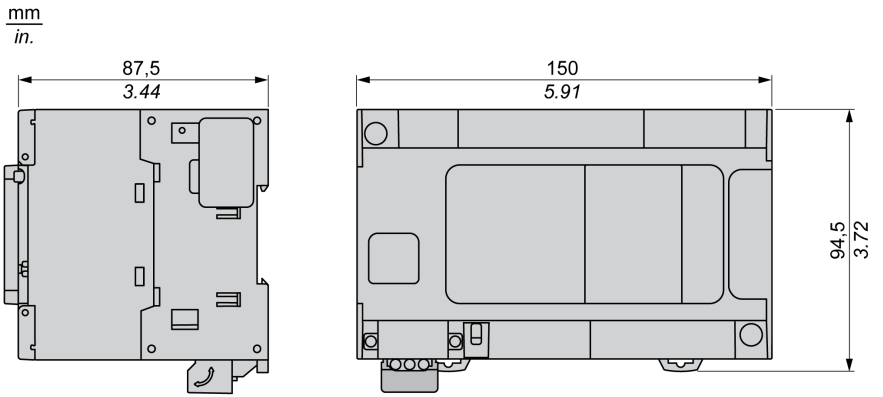

Chapter 12
TM241CEC24U

TM241CEC24U Presentation

Overview

TM241CEC24U logic controller:

- 14 digital inputs
  - 8 fast inputs
  - 6 regular inputs
- 10 digital outputs
  - 4 fast outputs
  - 6 regular outputs
- Communication port
  - 2 serial line ports
  - 1 Ethernet port
  - 1 CANopen port
  - 1 USB mini-B programming port

Description

The following figure shows the different components of the TM241CEC24U logic controller:

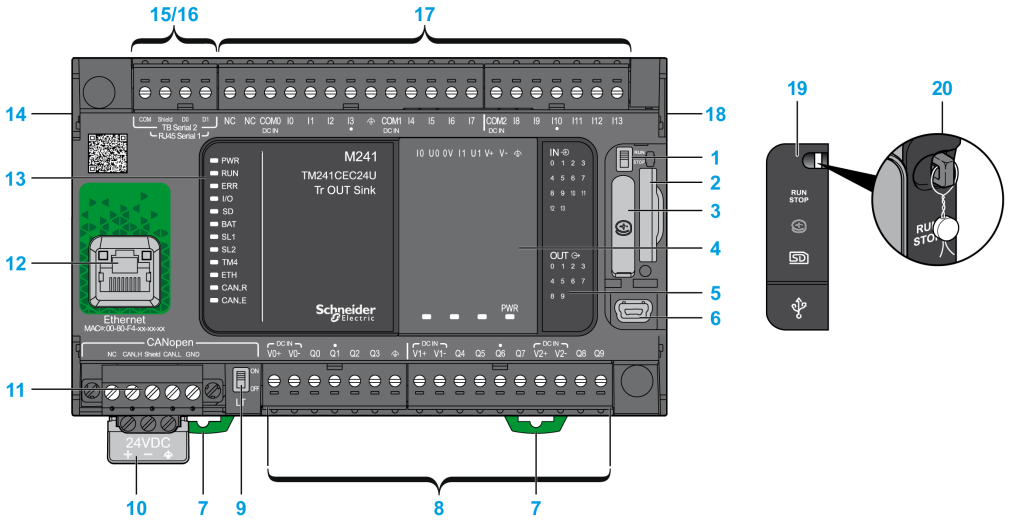

N°	Description	Refer to
1	Run/Stop switch	Run/Stop *(see page 57)*
2	SD card slot	SD Card *(see page 59)*
3	Battery holder	Real Time Clock (RTC) *(see page 44)*
4	Cartridge slot	–
5	LEDs for indicating I/O states	Digital Inputs Status LEDs *(see page 195)*
		Transistor Outputs Status LEDs *(see page 209)* Fast Outputs Status LEDs *(see page 214)*
6	USB mini-B programming port / For terminal connection to a programming PC (SoMachine)	USB Mini-B Programming Port *(see page 229)*
7	Clip-on lock for 35 mm (1.38 in.) top hat section rail (DIN-rail)	Top Hat Section Rail *(see page 76)*
8	Embedded regular transistor outputs	Regular Transistor Outputs *(see page 208)*
	Embedded fast transistor outputs	Fast Transistor Outputs *(see page 213)*
	Output removable terminal block	Rules for Removable Screw Terminal Block *(see page 85)*
9	CANopen Line termination switch	CANopen Port *(see page 222)*
10	24 Vdc power supply	DC Power supply Characteristics and Wiring *(see page 90)*
11	CANopen port / Screw terminal block type	–
12	Ethernet port / Type RJ45 (RS-232 or RS-485)	Ethernet Port *(see page 226)*
13	Status LEDs	–
14	TM4 bus connector	TM4 Expansion Modules *(see page 27)*
15	Serial line port 1 / Type RJ45 (RS-232 or RS-485)	Serial Line 1 *(see page 231)*
16	Serial line port 2 / Screw terminal block type (RS-485)	Serial Line 2 *(see page 234)*
17	Embedded digital inputs	Embedded Digital Inputs *(see page 194)*
	Input removable terminal block	Rules for Removable Screw Terminal Block *(see page 85)*
18	TM3/TM2 bus connector	TM3 Expansion Modules *(see page 28)*
19	Protective cover (SD card slot, Run/Stop switch, and USB mini-B programming port)	–
20	Locking hook (Hook not included)	–

Status LEDs

The following figure shows the status LEDs:

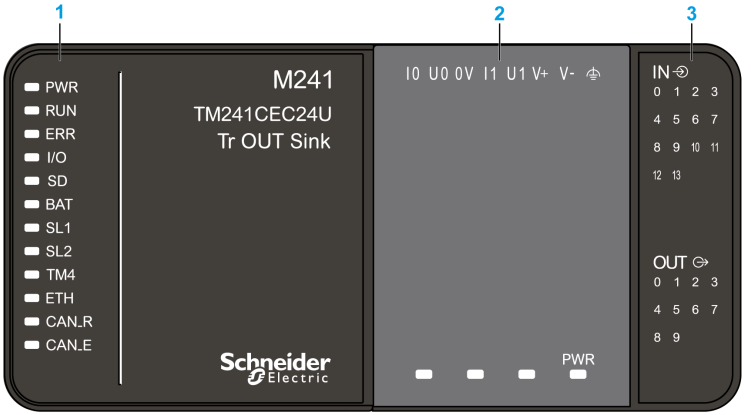

1 System status LEDs
2 Cartridge status LEDs (optional)
3 I/Os status LEDs

The following table describes the system status LEDs:

Label	Function Type	Color	Status	Description		
				Controller States[1]	Prg Port Communication	Application Execution
PWR	Power	Green	On	Indicates that power is applied.		
			Off	Indicates that power is removed.		
RUN	Machine status	Green	On	Indicates that the controller is running a valid application.		
			Flashing	Indicates that the controller has a valid application that is stopped.		
			1 flash	Indicates that the controller has paused at BREAKPOINT.		
			Off	Indicates that the controller is not programmed	-	-

Label	Function Type	Color	Status	Description		
				Controller States[1]	Prg Port Communication	Application Execution
ERR	Error	Red	On	An operating system error has been detected.	Restricted	No
			Fast flashing	The controller has detected an internal error.	Restricted	No
			Slow flashing	Indicates either that a minor error has been detected, if the RUN LED is illuminated, or that no application has been detected.	Yes	No
I/O	I/O error	Red	On	Indicates device errors on the embedded I/Os, serial line 1 or 2, SD card, cartridge, TM4 bus, TM3 bus, Ethernet port or CANopen port.		
SD	SD card access	Green	On	Indicates that the SD card is being accessed		
BAT	Battery	Red	On	Indicates that the battery needs to be replaced.		
			Flashing	Indicates that the battery charge is low.		
SL1	Serial line 1	Green	On	Indicates the status of serial line 1 *(see page 233)*		
			Off	Indicates no serial communication		
SL2	Serial line 2	Green	On	Indicates the status of serial line 2 *(see page 235)*		
			Off	Indicates no serial communication		
TM4	Error on TM4 bus	Red	On	Indicates that an error has been detected on the TM4 bus		
			Off	Indicates that no error has been detected on the TM4 bus		
ETH	Ethernet port status	Green	On	Indicates that the ethernet port is connected and the IP address is defined.		
			3 flashes	Indicates that the ethernet port is not connected.		
			4 flashes	Indicates that the IP address is already in used.		
			5 flashes	Indicates that the module is waiting for BOOTP or DHCP sequence.		
			6 flashes	Indicates that the configured IP address is not valid.		

Label	Function Type	Color	Status	Description		
				Controller States[1]	Prg Port Communication	Application Execution
CAN R	CANopen running status	Green	On	Indicates that the CANopen bus is operational.		
			Off	Indicates that the CANopen master is configured.		
			Flashing	Indicates that the CANopen bus is being initialized.		
			1 flash per second	Indicates that the CANopen bus is stopped.		
CAN E	CANopen error	Red	On	Indicates that the CANopen bus is stopped (BUS OFF).		
			Off	Indicates no CANopen detected error.		
			Flashing	Indicates that the CANopen bus is not valid.		
			1 flash per second	Indicates that the controller has detected that the maximum number of error frames has been reached or exceeded.		
			2 flashes per second	Indicates that the controller has detected either a Node Guarding or a Heartbeat event.		

[1] For more information about the controller state description, refer to the M241 Logic Controller - Programming Guide.

Dimensions

The following figure shows the external dimensions of the logic controller:

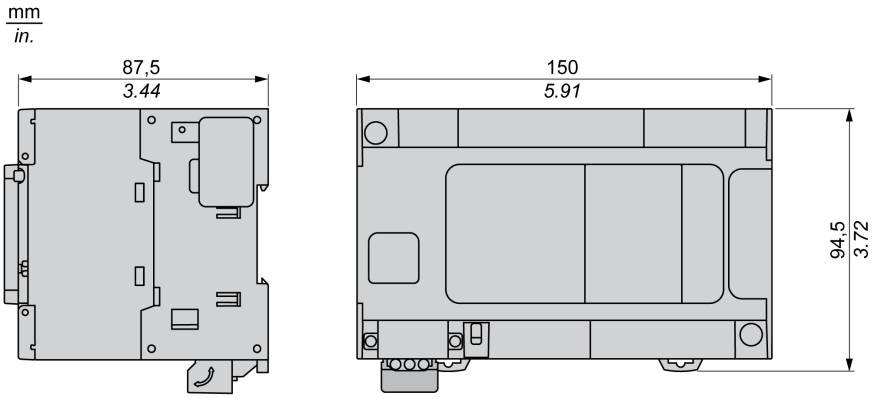

Chapter 13
TM241C40R

TM241C40R Presentation

Overview

TM241C40R logic controller:

- 24 digital inputs
  - 8 fast inputs
  - 16 regular inputs
- 16 digital outputs
  - 4 fast outputs
  - 12 relay outputs (2 A)
- Communication port
  - 2 serial line ports
  - 1 USB mini-B programming port

Description

The following figure shows the different components of the TM241C40R logic controller:

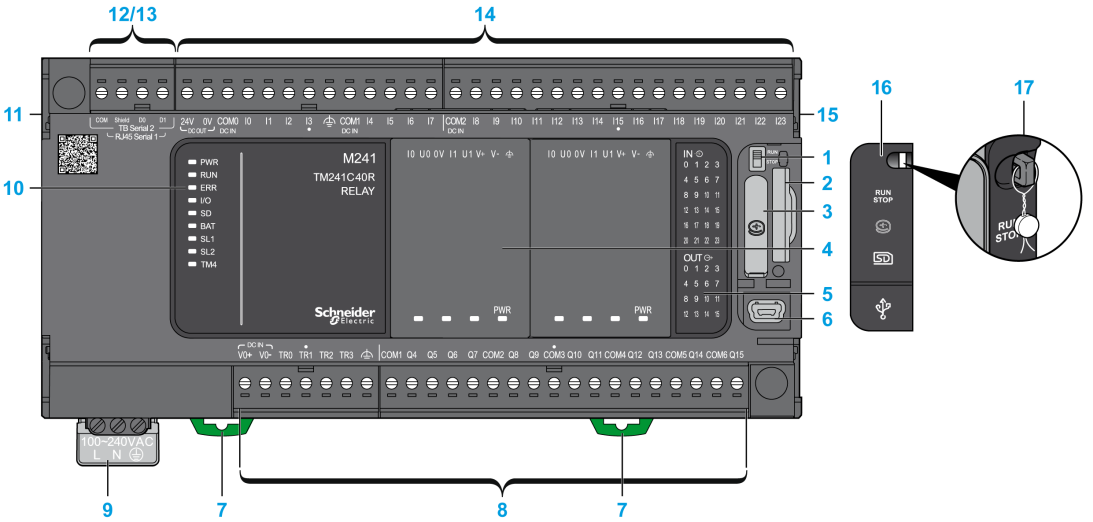

N°	Description	Refer to
1	Run/Stop switch	Run/Stop *(see page 57)*
2	SD card slot	SD Card *(see page 59)*
3	Battery holder	Real Time Clock (RTC) *(see page 44)*
4	Cartridge slot	–
5	LEDs for indicating I/O states	Digital Inputs Status LEDs *(see page 195)*
		Relay Outputs Status LEDs *(see page 203)* Fast Outputs Status LEDs *(see page 214)*
6	USB mini-B programming port / For terminal connection to a programming PC (SoMachine)	USB Mini-B Programming Port *(see page 229)*
7	Clip-on lock for 35 mm (1.38 in.) top hat section rail (DIN-rail)	Top Hat Section Rail *(see page 76)*
8	Embedded relay outputs	Relay Outputs *(see page 202)*
	Embedded fast transistor outputs	Fast Transistor Outputs *(see page 213)*
	Output removable terminal block	Rules for Removable Screw Terminal Block *(see page 85)*
9	100...240 Vac 50/60 Hz power supply	AC Power Supply Characteristics and Wiring *(see page 94)*
10	Status LEDs	–
11	TM4 bus connector	TM4 Expansion Modules *(see page 27)*
12	Serial line port 1 / Type RJ45 (RS-232 or RS-485)	Serial Line 1 *(see page 231)*
13	Serial line port 2 / Screw terminal block type (RS-485)	Serial Line 2 *(see page 234)*
14	Embedded digital inputs	Embedded Digital Inputs *(see page 194)*
	Input removable terminal block	Rules for Removable Screw Terminal Block *(see page 85)*
15	TM3/TM2 bus connector	TM3 Expansion Modules *(see page 28)*
16	Protective cover (SD card slot, Run/Stop switch, and USB mini-B programming port)	–
17	Locking hook (Hook not included)	–

Status LEDs

The following figure shows the status LEDs:

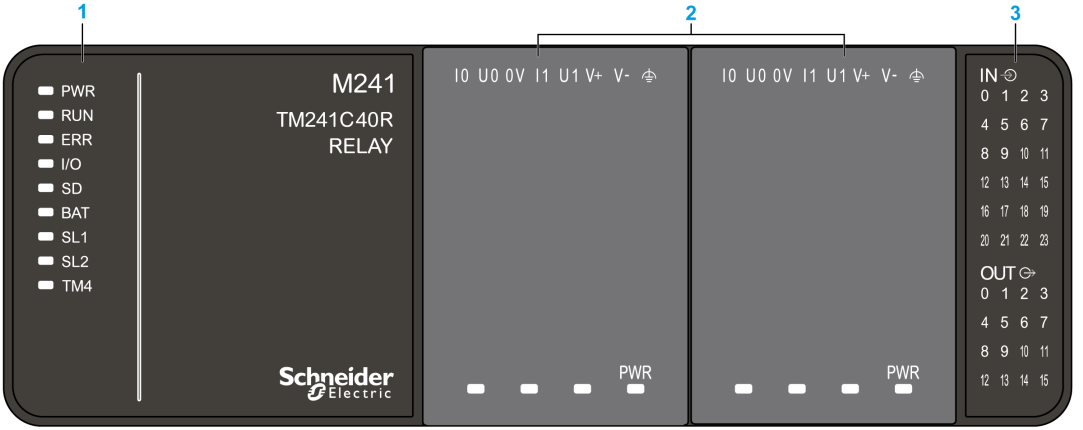

1 System status LEDs
2 Cartridge status LEDs (optional)
3 I/Os status LEDs

The following table describes the system status LEDs:

Label	Function Type	Color	Status	Description		
				Controller States[1]	Prg Port Communication	Application Execution
PWR	Power	Green	On	Indicates that power is applied.		
			Off	Indicates that power is removed.		
RUN	Machine status	Green	On	Indicates that the controller is running a valid application.		
			Flashing	Indicates that the controller has a valid application that is stopped.		
			1 flash	Indicates that the controller has paused at BREAKPOINT.		
			Off	Indicates that the controller is not programmed	-	-

Label	Function Type	Color	Status	Description		
				Controller States[1]	Prg Port Communication	Application Execution
ERR	Error	Red	On	Indicates that an operating system error has been detected.	Restricted	No
			Fast flashing	Indicates that the controller has detected an internal error.	Restricted	No
			Slow flashing	Indicates either that a minor error has been detected, if the RUN LED is illuminated, or that no application has been detected.	Yes	No
I/O	I/O error	Red	On	Indicates device errors on the embedded I/Os, serial line 1 or 2, SD card, cartridge, TM4 bus, TM3 bus.		
SD	SD card access	Green	On	Indicates that the SD card is being accessed		
BAT	Battery	Red	On	Indicates that the battery needs to be replaced.		
			Flashing	Indicates that the battery charge is low.		
SL1	Serial line 1	Green	On	Indicates the status of serial line 1 *(see page 233)*		
			Off	Indicates no serial communication		
SL2	Serial line 2	Green	On	Indicates the status of serial line 2 *(see page 235)*		
			Off	Indicates no serial communication		
TM4	Error on TM4 bus	Red	On	Indicates that an error has been detected on the TM4 bus		
			Off	Indicates that no error has been detected on the TM4 bus		

[1] For more information about the controller state description, refer to the M241 Logic Controller - Programming Guide.

Dimensions

The following figure shows the external dimensions of the logic controller:

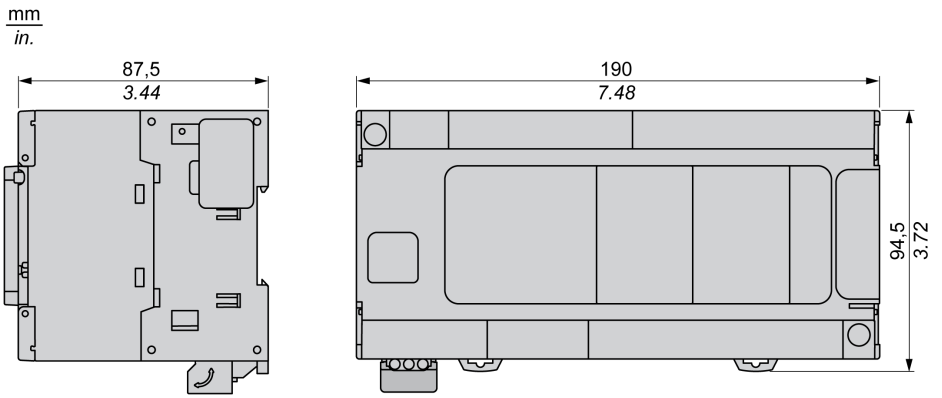

Chapter 14
TM241CE40R

TM241CE40R Presentation

Overview

TM241CE40R logic controller:

- 24 digital inputs
  - 8 fast inputs
  - 16 regular inputs
- 16 digital outputs
  - 4 fast outputs
  - 12 relay outputs (2 A)
- Communication port
  - 2 serial line ports
  - 1 Ethernet port
  - 1 USB mini-B programming port

Description

The following figure shows the different components of the TM241CE40R logic controller:

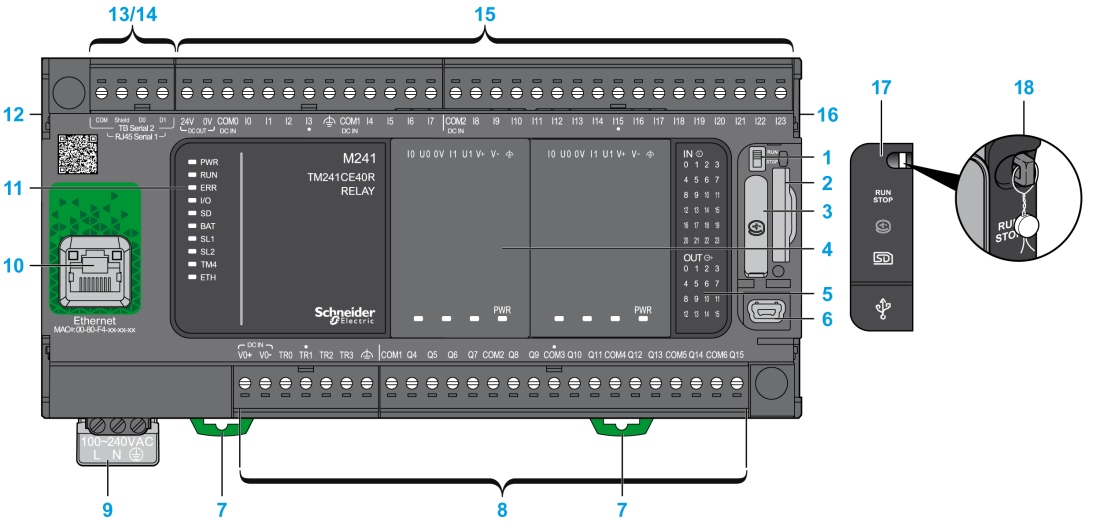

N°	Description	Refer to
1	Run/Stop switch	Run/Stop *(see page 57)*
2	SD card slot	SD Card *(see page 59)*
3	Battery holder	Real Time Clock (RTC) *(see page 44)*
4	Cartridge slot	–
5	LEDs for indicating I/O states	Digital Inputs Status LEDs *(see page 195)*
		Relay Outputs Status LEDs *(see page 203)* Fast Outputs Status LEDs *(see page 214)*
6	USB mini-B programming port / For terminal connection to a programming PC (SoMachine)	USB Mini-B Programming Port *(see page 229)*
7	Clip-on lock for 35 mm (1.38 in.) top hat section rail (DIN-rail)	Top Hat Section Rail *(see page 76)*
8	Embedded relay outputs	Relay Outputs *(see page 202)*
	Embedded fast transistor outputs	Fast Transistor Outputs *(see page 213)*
	Output removable terminal block	Rules for Removable Screw Terminal Block *(see page 85)*
9	100...240 Vac 50/60 Hz power supply	AC Power Supply Characteristics and Wiring *(see page 94)*
10	Ethernet port / Type RJ45 (RS-232 or RS-485)	Ethernet Port *(see page 226)*
11	Status LEDs	–
12	TM4 bus connector	TM4 Expansion Modules *(see page 27)*
13	Serial line port 1 / Type RJ45 (RS-232 or RS-485)	Serial Line 1 *(see page 231)*
14	Serial line port 2 / Screw terminal block type (RS-485)	Serial Line 2 *(see page 234)*
15	Embedded digital inputs	Embedded Digital Inputs *(see page 194)*
	Input removable terminal block	Rules for Removable Screw Terminal Block *(see page 85)*
16	TM3/TM2 bus connector	TM3 Expansion Modules *(see page 28)*
17	Protective cover (SD card slot, Run/Stop switch, and USB mini-B programming port)	–
18	Locking hook (Hook not included)	–

Status LEDs

The following figure shows the status LEDs:

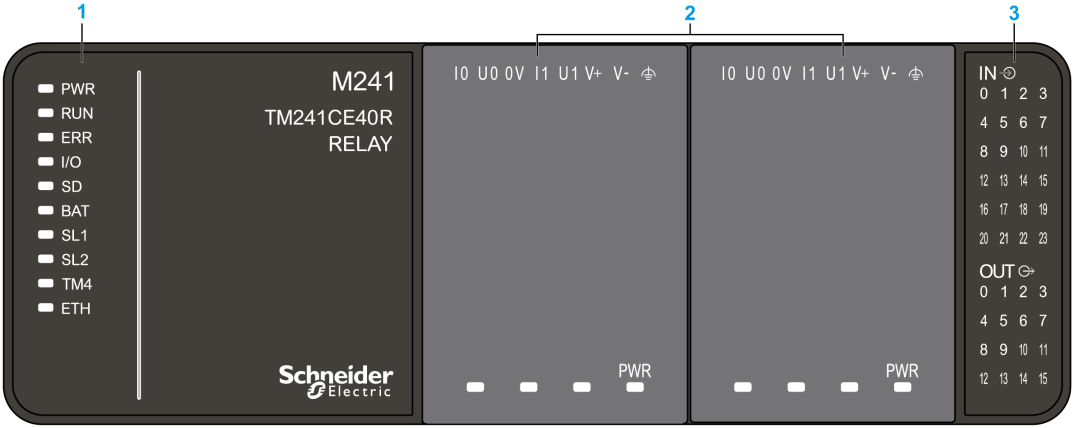

1 System status LEDs
2 Cartridge status LEDs (optional)
3 I/Os status LEDs

The following table describes the system status LEDs:

Label	Function Type	Color	Status	Description		
				Controller States[1]	Prg Port Communication	Application Execution
PWR	Power	Green	On	Indicates that power is applied.		
			Off	Indicates that power is removed.		
RUN	Machine status	Green	On	Indicates that the controller is running a valid application.		
			Flashing	Indicates that the controller has a valid application that is stopped.		
			1 flash	Indicates that the controller has paused at BREAKPOINT.		
			Off	Indicates that the controller is not programmed	-	-

Label	Function Type	Color	Status	Description		
				Controller States[1]	Prg Port Communication	Application Execution
ERR	Error	Red	On	An operating system error has been detected.	Restricted	No
			Fast flashing	The controller has detected an internal error.	Restricted	No
			Slow flashing	Indicates either that a minor error has been detected, if the RUN LED is illuminated, or that no application has been detected.	Yes	No
I/O	I/O error	Red	On	Indicates device errors on the embedded I/Os, serial line 1 or 2, SD card, cartridge, TM4 bus, TM3 bus, or Ethernet port.		
SD	SD card access	Green	On	Indicates that the SD card is being accessed		
BAT	Battery	Red	On	Indicates that the battery needs to be replaced.		
			Flashing	Indicates that the battery charge is low.		
SL1	Serial line 1	Green	On	Indicates the status of serial line 1 *(see page 233)*		
			Off	Indicates no serial communication		
SL2	Serial line 2	Green	On	Indicates the status of serial line 2 *(see page 235)*		
			Off	Indicates no serial communication		
TM4	Error on TM4 bus	Red	On	Indicates that an error has been detected on the TM4 bus		
			Off	Indicates that no error has been detected on the TM4 bus		
ETH	Ethernet port status	Green	On	Indicates that the ethernet port is connected and the IP address is defined.		
			3 flashes	Indicates that the ethernet port is not connected.		
			4 flashes	Indicates that the IP address is already in used.		
			5 flashes	Indicates that the module is waiting for BOOTP or DHCP sequence.		
			6 flashes	Indicates that the configured IP address is not valid.		

[1] For more information about the controller state description, refer to the M241 Logic Controller - Programming Guide.

Dimensions

The following figure shows the external dimensions of the logic controller:

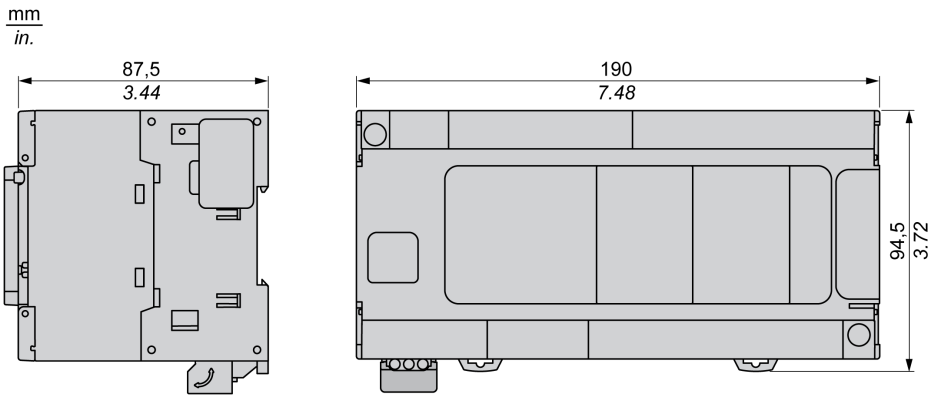

Chapter 15
TM241C40T

TM241C40T Presentation

Overview

TM241C40T logic controller:

- 24 digital inputs
  - 8 fast inputs
  - 16 regular inputs
- 16 digital outputs
  - 4 fast outputs
  - 12 regular outputs
- Communication port
  - 2 serial line ports
  - 1 USB mini-B programming port

Description

The following figure shows the different components of the TM241C40T logic controller:

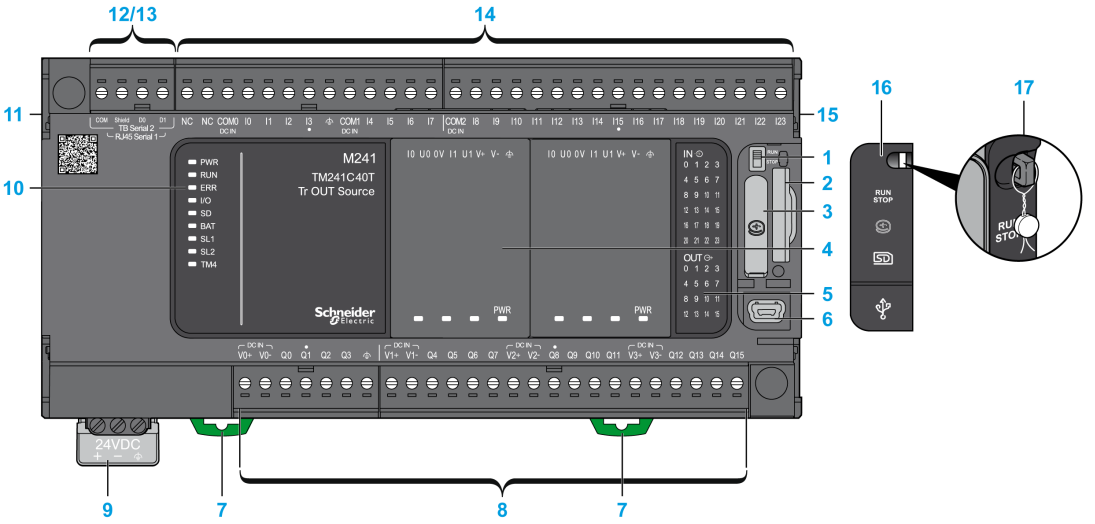

N°	Description	Refer to
1	Run/Stop switch	Run/Stop *(see page 57)*
2	SD card slot	SD Card *(see page 59)*
3	Battery holder	Real Time Clock (RTC) *(see page 44)*
4	Cartridge slot	–
5	LEDs for indicating I/O states	Digital Inputs Status LEDs *(see page 195)*
		Transistor Outputs Status LEDs *(see page 209)* Fast Outputs Status LEDs *(see page 214)*
6	USB mini-B programming port / For terminal connection to a programming PC (SoMachine)	USB Mini-B Programming Port *(see page 229)*
7	Clip-on lock for 35 mm (1.38 in.) top hat section rail (DIN-rail)	Top Hat Section Rail *(see page 76)*
8	Embedded regular transistor outputs	Regular Transistor Outputs *(see page 208)*
	Embedded fast transistor outputs	Fast Transistor Outputs *(see page 213)*
	Output removable terminal block	Rules for Removable Screw Terminal Block *(see page 85)*
9	24 Vdc power supply	DC Power supply Characteristics and Wiring *(see page 90)*
10	Status LEDs	–
11	TM4 bus connector	TM4 Expansion Modules *(see page 27)*
12	Serial line port 1 / Type RJ45 (RS-232 or RS-485)	Serial Line 1 *(see page 231)*
13	Serial line port 2 / Screw terminal block type (RS-485)	Serial Line 2 *(see page 234)*
14	Embedded digital inputs	Embedded Digital Inputs *(see page 194)*
	Input removable terminal block	Rules for Removable Screw Terminal Block *(see page 85)*
15	TM3/TM2 bus connector	TM3 Expansion Modules *(see page 28)*
16	Protective cover (SD card slot, Run/Stop switch, and USB mini-B programming port)	–
17	Locking hook (Hook not included)	–

Status LEDs

The following figure shows the status LEDs:

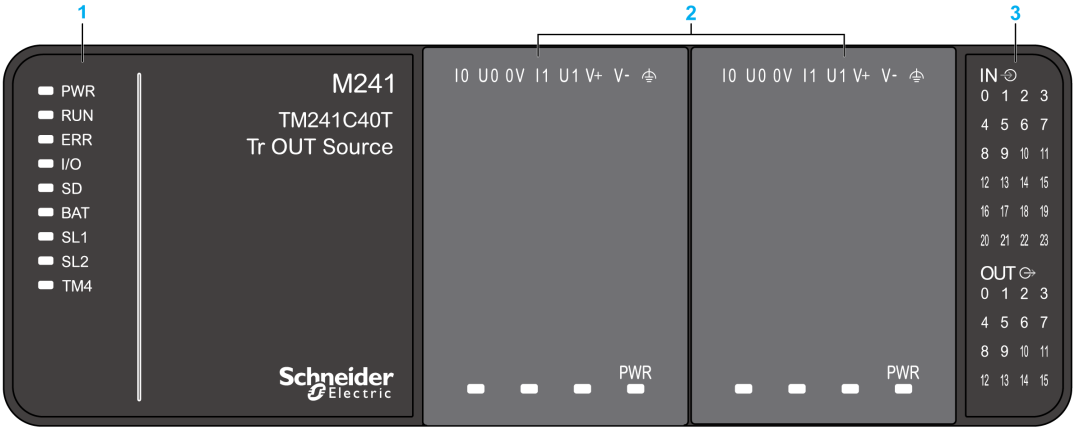

1 System status LEDs
2 Cartridge status LEDs (optional)
3 I/Os status LEDs

The following table describes the system status LEDs:

Label	Function Type	Color	Status	Description		
				Controller States[1]	Prg Port Communication	Application Execution
PWR	Power	Green	On	Indicates that power is applied.		
			Off	Indicates that power is removed.		
RUN	Machine status	Green	On	Indicates that the controller is running a valid application.		
			Flashing	Indicates that the controller has a valid application that is stopped.		
			1 flash	Indicates that the controller has paused at BREAKPOINT.		
			Off	Indicates that the controller is not programmed	-	-

Label	Function Type	Color	Status	Description		
				Controller States[1]	Prg Port Communication	Application Execution
ERR	Error	Red	On	Indicates that an operating system error has been detected.	Restricted	No
			Fast flashing	Indicates that the controller has detected an internal error.	Restricted	No
			Slow flashing	Indicates either that a minor error has been detected, if the RUN LED is illuminated, or that no application has been detected.	Yes	No
I/O	I/O error	Red	On	Indicates device errors on the embedded I/Os, serial line 1 or 2, SD card, cartridge, TM4 bus, TM3 bus.		
SD	SD card access	Green	On	Indicates that the SD card is being accessed		
BAT	Battery	Red	On	Indicates that the battery needs to be replaced.		
			Flashing	Indicates that the battery charge is low.		
SL1	Serial line 1	Green	On	Indicates the status of serial line 1 *(see page 233)*		
			Off	Indicates no serial communication		
SL2	Serial line 2	Green	On	Indicates the status of serial line 2 *(see page 235)*		
			Off	Indicates no serial communication		
TM4	Error on TM4 bus	Red	On	Indicates that an error has been detected on the TM4 bus		
			Off	Indicates that no error has been detected on the TM4 bus		

[1] For more information about the controller state description, refer to the M241 Logic Controller - Programming Guide.

Dimensions

The following figure shows the external dimensions of the logic controller:

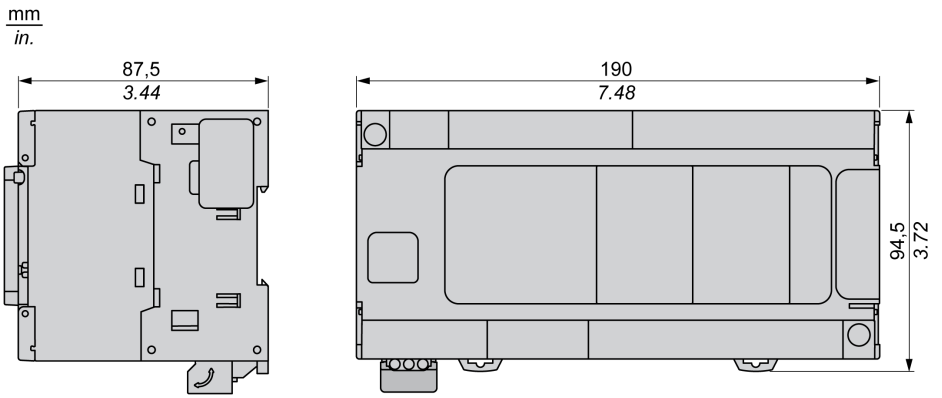

Chapter 16
TM241CE40T

TM241CE40T Presentation

Overview

TM241CE40T logic controller:

- 24 digital inputs
  - 8 fast inputs
  - 16 regular inputs
- 16 digital outputs
  - 4 fast outputs
  - 12 regular outputs
- Communication port
  - 2 serial line ports
  - 1 Ethernet port
  - 1 USB mini-B programming port

Description

The following figure shows the different components of the TM241CE40T logic controller:

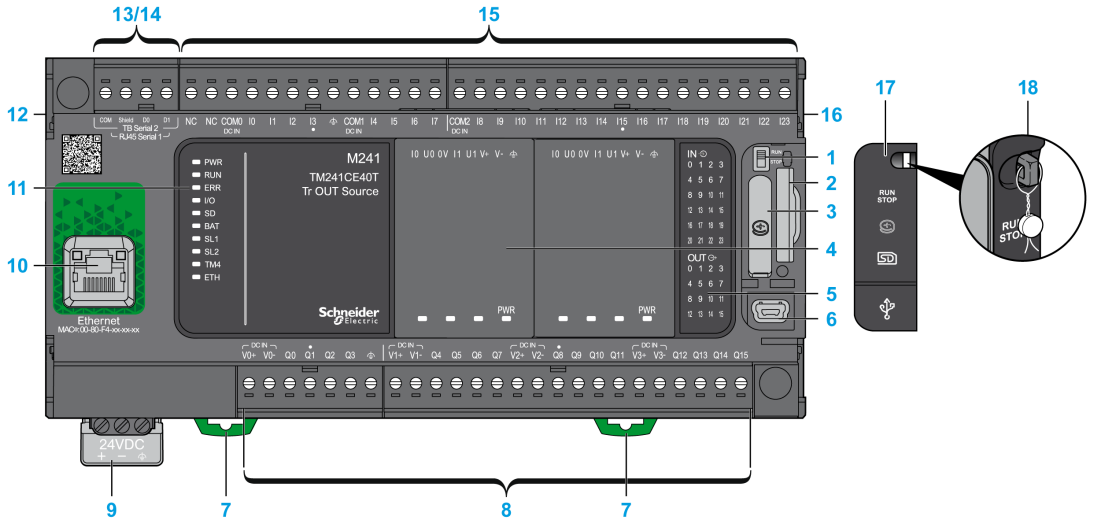

N°	Description	Refer to
1	Run/Stop switch	Run/Stop *(see page 57)*
2	SD card slot	SD Card *(see page 59)*
3	Battery holder	Real Time Clock (RTC) *(see page 44)*
4	Cartridge slot	–
5	LEDs for indicating I/O states	Digital Inputs Status LEDs *(see page 195)*
		Transistor Outputs Status LEDs *(see page 209)* Fast Outputs Status LEDs *(see page 214)*
6	USB mini-B programming port / For terminal connection to a programming PC (SoMachine)	USB Mini-B Programming Port *(see page 229)*
7	Clip-on lock for 35 mm (1.38 in.) top hat section rail (DIN-rail)	Top Hat Section Rail *(see page 76)*
8	Embedded regular transistor outputs	Regular Transistor Outputs *(see page 208)*
	Embedded fast transistor outputs	Fast Transistor Outputs *(see page 213)*
	Output removable terminal block	Rules for Removable Screw Terminal Block *(see page 85)*
9	24 Vdc power supply	DC Power supply Characteristics and Wiring *(see page 90)*
10	Ethernet port / Type RJ45 (RS-232 or RS-485)	Ethernet Port *(see page 226)*
11	Status LEDs	–
12	TM4 bus connector	TM4 Expansion Modules *(see page 27)*
13	Serial line port 1 / Type RJ45 (RS-232 or RS-485)	Serial Line 1 *(see page 231)*
14	Serial line port 2 / Screw terminal block type (RS-485)	Serial Line 2 *(see page 234)*
15	Embedded digital inputs	Embedded Digital Inputs *(see page 194)*
	Input removable terminal block	Rules for Removable Screw Terminal Block *(see page 85)*
16	TM3/TM2 bus connector	TM3 Expansion Modules *(see page 28)*
17	Protective cover (SD card slot, Run/Stop switch, and USB mini-B programming port)	–
18	Locking hook (Hook not included)	–

Status LEDs

The following figure shows the status LEDs:

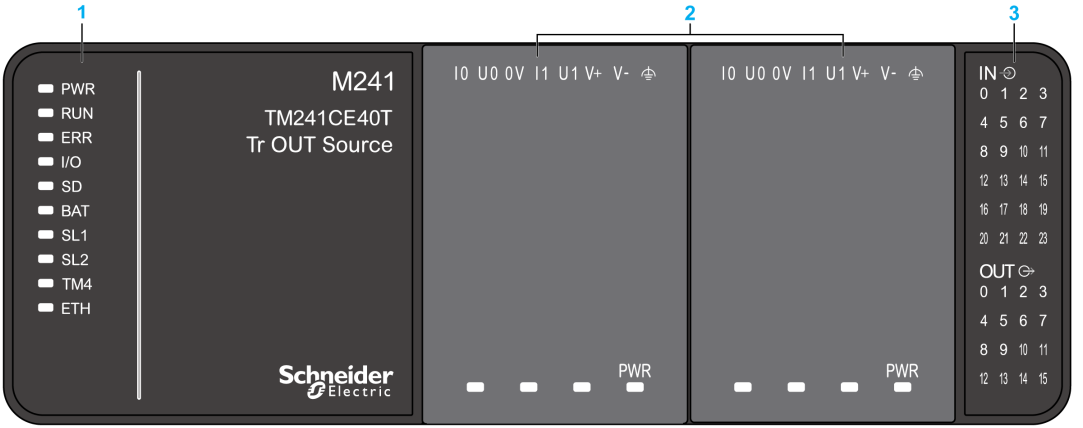

1 System status LEDs
2 Cartridge status LEDs (optional)
3 I/Os status LEDs

The following table describes the system status LEDs:

Label	Function Type	Color	Status	Description		
				Controller States[1]	Prg Port Communication	Application Execution
PWR	Power	Green	On	Indicates that power is applied.		
			Off	Indicates that power is removed.		
RUN	Machine status	Green	On	Indicates that the controller is running a valid application.		
			Flashing	Indicates that the controller has a valid application that is stopped.		
			1 flash	Indicates that the controller has paused at BREAKPOINT.		
			Off	Indicates that the controller is not programmed	-	-

Label	Function Type	Color	Status	Description		
				Controller States[1]	Prg Port Communication	Application Execution
ERR	Error	Red	On	An operating system error has been detected.	Restricted	No
			Fast flashing	The controller has detected an internal error.	Restricted	No
			Slow flashing	Indicates either that a minor error has been detected, if the RUN LED is illuminated, or that no application has been detected.	Yes	No
I/O	I/O error	Red	On	Indicates device errors on the embedded I/Os, serial line 1 or 2, SD card, cartridge, TM4 bus, TM3 bus, or Ethernet port.		
SD	SD card access	Green	On	Indicates that the SD card is being accessed		
BAT	Battery	Red	On	Indicates that the battery needs to be replaced.		
			Flashing	Indicates that the battery charge is low.		
SL1	Serial line 1	Green	On	Indicates the status of serial line 1 *(see page 233)*		
			Off	Indicates no serial communication		
SL2	Serial line 2	Green	On	Indicates the status of serial line 2 *(see page 235)*		
			Off	Indicates no serial communication		
TM4	Error on TM4 bus	Red	On	Indicates that an error has been detected on the TM4 bus		
			Off	Indicates that no error has been detected on the TM4 bus		
ETH	Ethernet port status	Green	On	Indicates that the ethernet port is connected and the IP address is defined.		
			3 flashes	Indicates that the ethernet port is not connected.		
			4 flashes	Indicates that the IP address is already in used.		
			5 flashes	Indicates that the module is waiting for BOOTP or DHCP sequence.		
			6 flashes	Indicates that the configured IP address is not valid.		

[1] For more information about the controller state description, refer to the M241 Logic Controller - Programming Guide.

Dimensions

The following figure shows the external dimensions of the logic controller:

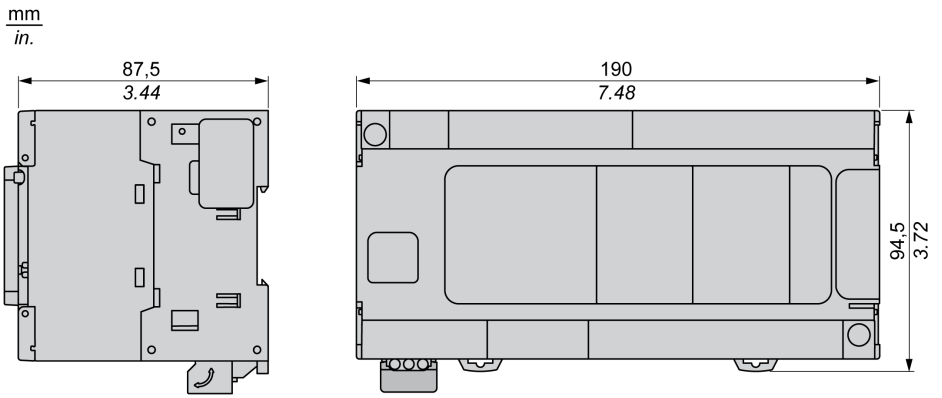

Chapter 17
TM241C40U

TM241C40U Presentation

Overview

TM241C24U logic controller:

- 24 digital inputs
  - 8 fast inputs
  - 16 regular inputs
- 16 digital outputs
  - 4 fast outputs
  - 12 regular outputs
- Communication port
  - 2 serial line ports
  - 1 USB mini-B programming port

Description

The following figure shows the different components of the TM241C40U logic controller:

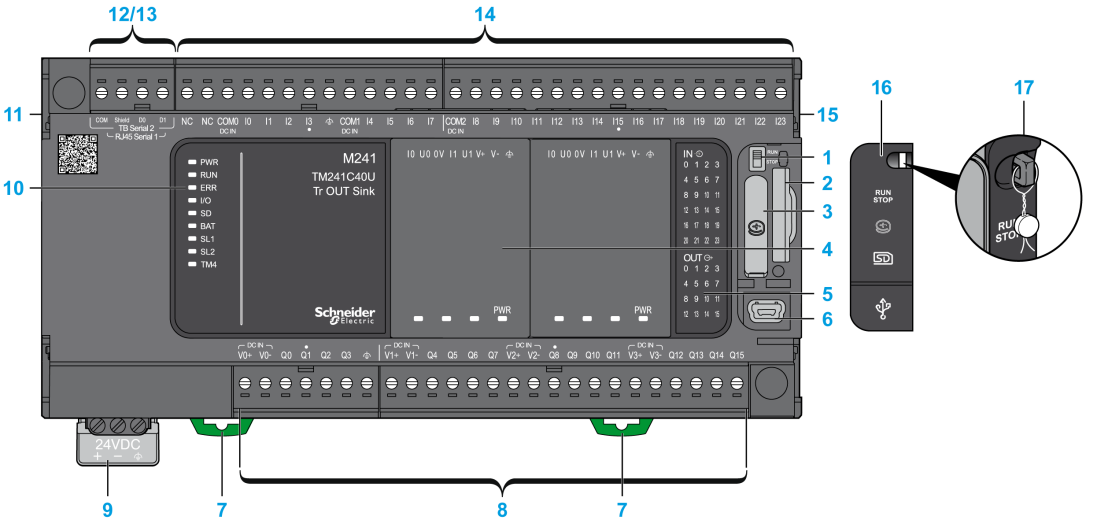

N°	Description	Refer to
1	Run/Stop switch	Run/Stop *(see page 57)*
2	SD card slot	SD Card *(see page 59)*
3	Battery holder	Real Time Clock (RTC) *(see page 44)*
4	Cartridge slot	–
5	LEDs for indicating I/O states	Digital Inputs Status LEDs *(see page 195)*
		Transistor Outputs Status LEDs *(see page 209)* Fast Outputs Status LEDs *(see page 214)*
6	USB mini-B programming port / For terminal connection to a programming PC (SoMachine)	USB Mini-B Programming Port *(see page 229)*
7	Clip-on lock for 35 mm (1.38 in.) top hat section rail (DIN-rail)	Top Hat Section Rail *(see page 76)*
8	Embedded regular transistor outputs	Regular Transistor Outputs *(see page 208)*
	Embedded fast transistor outputs	Fast Transistor Outputs *(see page 213)*
	Output removable terminal block	Rules for Removable Screw Terminal Block *(see page 85)*
9	24 Vdc power supply	DC Power supply Characteristics and Wiring *(see page 90)*
10	Status LEDs	–
11	TM4 bus connector	TM4 Expansion Modules *(see page 27)*
12	Serial line port 1 / Type RJ45 (RS-232 or RS-485)	Serial Line 1 *(see page 231)*
13	Serial line port 2 / Screw terminal block type (RS-485)	Serial Line 2 *(see page 234)*
14	Embedded digital inputs	Embedded Digital Inputs *(see page 194)*
	Input removable terminal block	Rules for Removable Screw Terminal Block *(see page 85)*
15	TM3/TM2 bus connector	TM3 Expansion Modules *(see page 28)*
16	Protective cover (SD card slot, Run/Stop switch, and USB mini-B programming port)	–
17	Locking hook (Hook not included)	–

Status LEDs

The following figure shows the status LEDs:

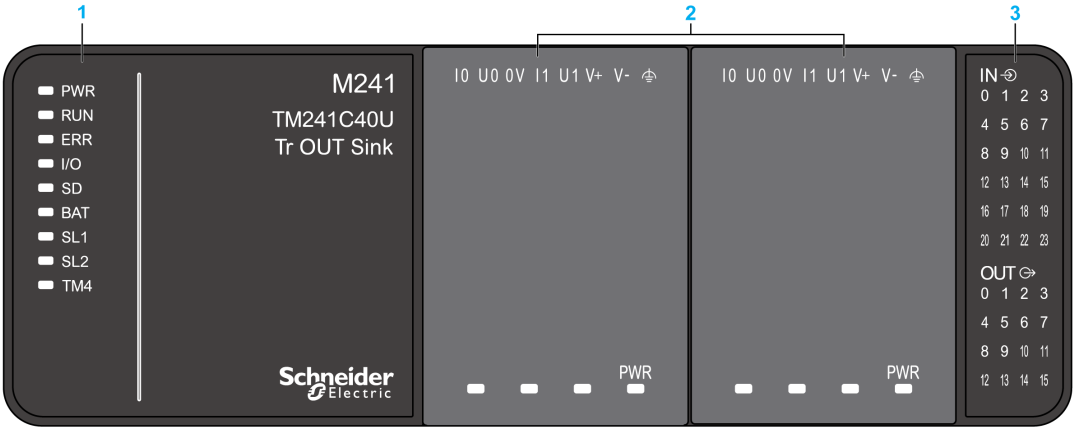

1 System status LEDs
2 Cartridge status LEDs (optional)
3 I/Os status LEDs

The following table describes the system status LEDs:

Label	Function Type	Color	Status	Description		
				Controller States[1]	Prg Port Communication	Application Execution
PWR	Power	Green	On	Indicates that power is applied.		
			Off	Indicates that power is removed.		
RUN	Machine status	Green	On	Indicates that the controller is running a valid application.		
			Flashing	Indicates that the controller has a valid application that is stopped.		
			1 flash	Indicates that the controller has paused at BREAKPOINT.		
			Off	Indicates that the controller is not programmed	-	-

Label	Function Type	Color	Status	Description		
				Controller States[1]	Prg Port Communication	Application Execution
ERR	Error	Red	On	Indicates that an operating system error has been detected.	Restricted	No
			Fast flashing	Indicates that the controller has detected an internal error.	Restricted	No
			Slow flashing	Indicates either that a minor error has been detected, if the RUN LED is illuminated, or that no application has been detected.	Yes	No
I/O	I/O error	Red	On	Indicates device errors on the embedded I/Os, serial line 1 or 2, SD card, cartridge, TM4 bus, TM3 bus.		
SD	SD card access	Green	On	Indicates that the SD card is being accessed		
BAT	Battery	Red	On	Indicates that the battery needs to be replaced.		
			Flashing	Indicates that the battery charge is low.		
SL1	Serial line 1	Green	On	Indicates the status of serial line 1 *(see page 233)*		
			Off	Indicates no serial communication		
SL2	Serial line 2	Green	On	Indicates the status of serial line 2 *(see page 235)*		
			Off	Indicates no serial communication		
TM4	Error on TM4 bus	Red	On	Indicates that an error has been detected on the TM4 bus		
			Off	Indicates that no error has been detected on the TM4 bus		

[1] For more information about the controller state description, refer to the M241 Logic Controller - Programming Guide.

Dimensions

The following figure shows the external dimensions of the logic controller:

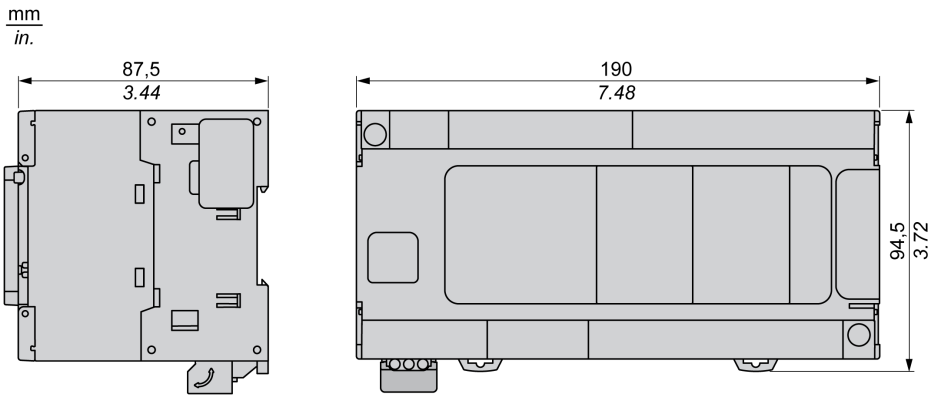

Chapter 18
TM241CE40U

TM241CE40U Presentation

Overview

TM241CE40U logic controllers:

- 24 digital inputs
  - 8 fast inputs
  - 16 regular inputs
- 16 digital outputs
  - 4 fast outputs
  - 12 regular outputs
- Communication port
  - 2 serial line ports
  - 1 Ethernet port
  - 1 USB mini-B programming port

Description

The following figure shows the different components of the TM241CE40U logic controller:

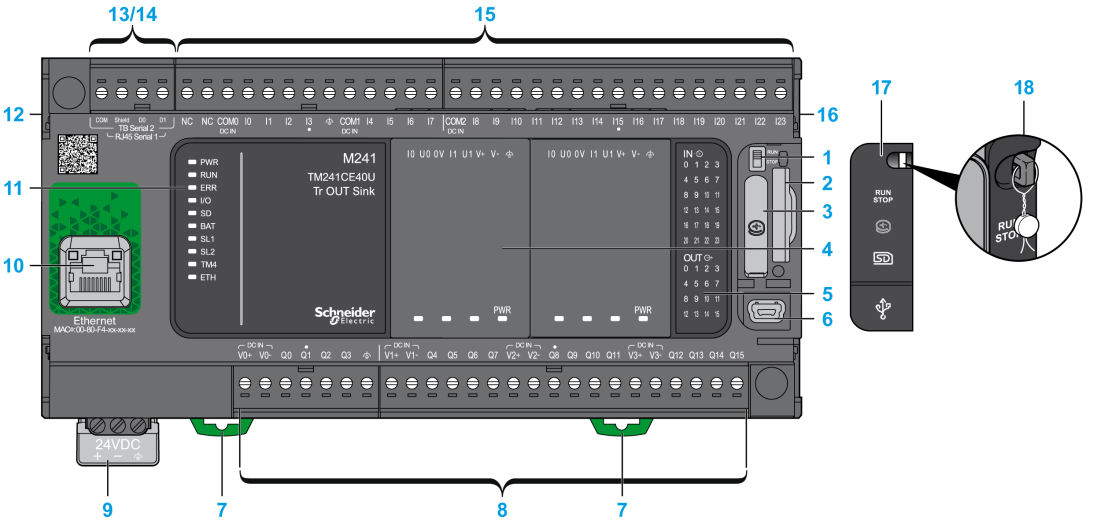

N°	Description	Refer to
1	Run/Stop switch	Run/Stop *(see page 57)*
2	SD card slot	SD Card *(see page 59)*
3	Battery holder	Real Time Clock (RTC) *(see page 44)*
4	Cartridge slot	–
5	LEDs for indicating I/O states	Digital Inputs Status LEDs *(see page 195)*
		Transistor Outputs Status LEDs *(see page 209)* Fast Outputs Status LEDs *(see page 214)*
6	USB mini-B programming port / For terminal connection to a programming PC (SoMachine)	USB Mini-B Programming Port *(see page 229)*
7	Clip-on lock for 35 mm (1.38 in.) top hat section rail (DIN-rail)	Top Hat Section Rail *(see page 76)*
8	Embedded regular transistor outputs	Regular Transistor Outputs *(see page 208)*
	Embedded fast transistor outputs	Fast Transistor Outputs *(see page 213)*
	Output removable terminal block	Rules for Removable Screw Terminal Block *(see page 85)*
9	24 Vdc power supply	DC Power supply Characteristics and Wiring *(see page 90)*
10	Ethernet port / Type RJ45 (RS-232 or RS-485)	Ethernet Port *(see page 226)*
11	Status LEDs	–
12	TM4 bus connector	TM4 Expansion Modules *(see page 27)*
13	Serial line port 1 / Type RJ45 (RS-232 or RS-485)	Serial Line 1 *(see page 231)*
14	Serial line port 2 / Screw terminal block type (RS-485)	Serial Line 2 *(see page 234)*
15	Embedded digital inputs	Embedded Digital Inputs *(see page 194)*
	Input removable terminal block	Rules for Removable Screw Terminal Block *(see page 85)*
16	TM3/TM2 bus connector	TM3 Expansion Modules *(see page 28)*
17	Protective cover (SD card slot, Run/Stop switch, and USB mini-B programming port)	–
18	Locking hook (Hook not included)	–

Status LEDs

The following figure shows the status LEDs:

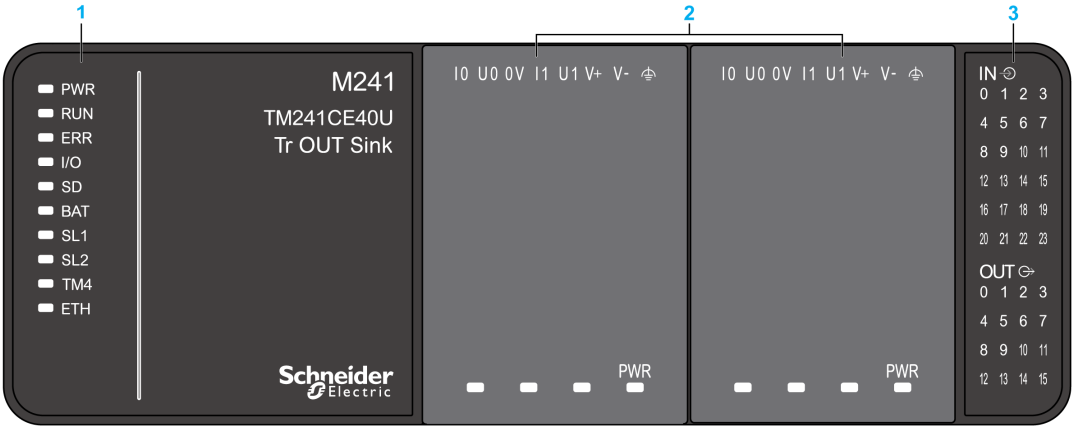

1 System status LEDs
2 Cartridge status LEDs (optional)
3 I/Os status LEDs

The following table describes the system status LEDs:

Label	Function Type	Color	Status	Description		
				Controller States[1]	Prg Port Communication	Application Execution
PWR	Power	Green	On	Indicates that power is applied.		
			Off	Indicates that power is removed.		
RUN	Machine status	Green	On	Indicates that the controller is running a valid application.		
			Flashing	Indicates that the controller has a valid application that is stopped.		
			1 flash	Indicates that the controller has paused at BREAKPOINT.		
			Off	Indicates that the controller is not programmed	-	-

Label	Function Type	Color	Status	Description		
				Controller States[1]	Prg Port Communication	Application Execution
ERR	Error	Red	On	An operating system error has been detected.	Restricted	No
			Fast flashing	The controller has detected an internal error.	Restricted	No
			Slow flashing	Indicates either that a minor error has been detected, if the RUN LED is illuminated, or that no application has been detected.	Yes	No
I/O	I/O error	Red	On	Indicates device errors on the embedded I/Os, serial line 1 or 2, SD card, cartridge, TM4 bus, TM3 bus, or Ethernet port.		
SD	SD card access	Green	On	Indicates that the SD card is being accessed		
BAT	Battery	Red	On	Indicates that the battery needs to be replaced.		
			Flashing	Indicates that the battery charge is low.		
SL1	Serial line 1	Green	On	Indicates the status of serial line 1 *(see page 233)*		
			Off	Indicates no serial communication		
SL2	Serial line 2	Green	On	Indicates the status of serial line 2 *(see page 235)*		
			Off	Indicates no serial communication		
TM4	Error on TM4 bus	Red	On	Indicates that an error has been detected on the TM4 bus		
			Off	Indicates that no error has been detected on the TM4 bus		
ETH	Ethernet port status	Green	On	Indicates that the ethernet port is connected and the IP address is defined.		
			3 flashes	Indicates that the ethernet port is not connected.		
			4 flashes	Indicates that the IP address is already in used.		
			5 flashes	Indicates that the module is waiting for BOOTP or DHCP sequence.		
			6 flashes	Indicates that the configured IP address is not valid.		

[1] For more information about the controller state description, refer to the M241 Logic Controller - Programming Guide.

Dimensions

The following figure shows the external dimensions of the logic controller:

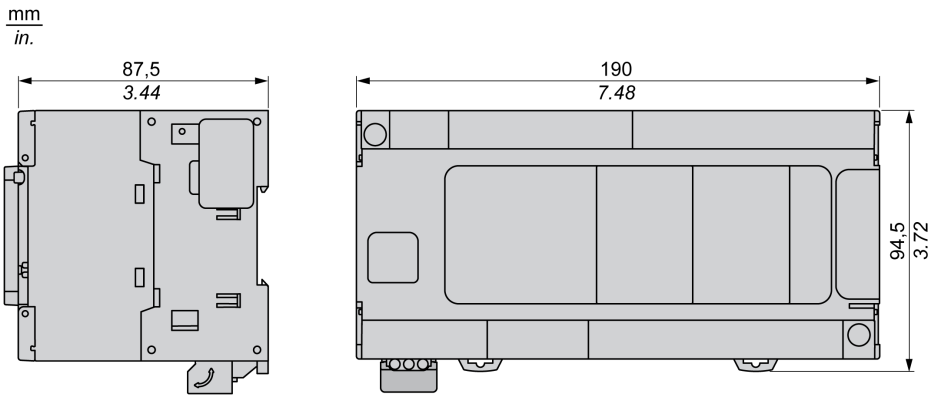

Chapter 19
Embedded I/O Channels

Overview

This chapter describes the embedded I/O channels.

What Is in This Chapter?

This chapter contains the following topics:

Topic	Page
Digital Inputs	194
Relay Outputs	202
Regular Transistor Outputs	208
Fast Transistor Outputs	213

Digital Inputs

Overview

The Modicon M241 Logic Controller has digital inputs embedded:

Reference	Total number of digital inputs	Fast inputs which can be used as 200 kHz HSC inputs	Total number of regular inputs	Regular inputs which can be used as 1 kHz HSC inputs
TM241C••24R TM241C••24T TM241C••24U	14	8	6	6
TM241C•40R TM241C•40T TM241C•40U	24	8	16	8

For more information, refer to Input Management *(see page 48)*.

⚠ DANGER

FIRE HAZARD

- Use only the correct wire sizes for the current capacity of the I/O channels and power supplies.
- For relay output (2 A) wiring, use conductors of at least 0.5 mm^2 (AWG 20) with a temperature rating of at least 80 °C (176 °F).
- For common conductors of relay output wiring (7 A), or relay output wiring greater than 2 A, use conductors of at least 1.0 mm^2 (AWG 16) with a temperature rating of at least 80 °C (176 °F).

Failure to follow these instructions will result in death or serious injury.

⚠ WARNING

UNINTENDED EQUIPMENT OPERATION

Do not exceed any of the rated values specified in the environmental and electrical characteristics tables.

Failure to follow these instructions can result in death, serious injury, or equipment damage.

Digital Input Status LEDs

The following figure shows the status LEDs for the TM241C••24• controller (the TM241C•40• controllers are similar with 40 LEDs):

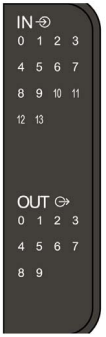

LED	Color	Status	Description
0...13	Green	On	The input channel is activated
		Off	The input channel is deactivated

Regular Input Characteristics

The table below describes the characteristics of the M241 Logic Controller with regular inputs:

Characteristic		Values	
		TM241C••24•	TM241C•40•
Number of regular inputs		6 inputs (I8...I13)	16 inputs (I8...I23)
Number of channel groups		1 common line for I8...I13	1 common line for I8...I23
Input type		Type 1 (IEC 61131-2 Edition 3)	
Logic type		Sink/Source	
Input voltage range		24 Vdc	
Rated input voltage		0...28.8 Vdc	
Rated input current		5 mA	7 mA
Input impedance		4.7 kΩ	
Input limit values	Voltage at state 1	> 15 Vdc (15...28.8 Vdc)	
	Voltage at state 0	< 5 Vdc (0...5 Vdc)	
	Current at state 1	> 2.5 mA	
	Current at state 0	< 1.0 mA	
Derating		No derating	
[1] For more information, refer to Integrator Filter Principle *(see page 49)*			

Characteristic		Values	
		TM241C••24•	TM241C•40•
Turn on time		50 µs + filter value[1]	
Turn off time		50 µs + filter value[1]	
Isolation	Between input and internal logic	500 Vac	
	Between input terminals	Not Isolated	
Connection type		Removable screw terminal block	
Connector insertion/removal durability		Over 100 times	
Cable	Type	Unshielded	
	Length	Maximum 50 m (164 ft)	
[1] For more information, refer to Integrator Filter Principle *(see page 49)*			

Fast Input Characteristics

The table below describes the characteristics of the M241 Logic Controller with fast inputs:

Characteristic		Value
Number of fast transistor inputs		8 inputs (I0...I7)
Number of channel groups		1 common line for I0...I3 1 common line for I4...I7
Input type		Type 1 (IEC 61131-2 Edition 3)
Logic type		Sink/Source
Rated input voltage		24 Vdc
Input voltage range		0...28.8 Vdc
Rated input current		10.7 mA
Input impedance		2.81 kΩ
Input limit values	Voltage at state 1	> 15 Vdc (15...28.8 Vdc)
	Voltage at state 0	< 5 Vdc (0...5 Vdc)
	Current at state 1	> 5 mA
	Current at state 0	< 1.5 mA
Derating		No derating
Turn on time		2 µs + filter value[1]
Turn off time		2 µs + filter value[1]
HSC maximum frequency	A/B phase	100 kHz
	Pulse/Direction	200 kHz
	Single phase	200 kHz
[1] For more information, refer to Integrator Filter Principle *(see page 49)*		

Characteristic		Value
HSC supported operation mode		• A/B phase counter • Pulse/Direction counter • Single/Dual phase counter
Isolation	Between input and internal logic	500 Vac
	Between input terminals	Not isolated
Connection type		Removable screw terminal block
Connector insertion/removal durability		Over 100 times
Cable	Type	Shielded, including the 24 Vdc power supply
	Length	Maximum 10 m (32.8 ft)
[1] For more information, refer to Integrator Filter Principle *(see page 49)*		

Removing Terminal Block

Refer to Removing Terminal Block *(see page 86)*.

TM241C••24R Wiring Diagrams

The following figure shows the sink wiring (positive logic) of the controller digital inputs:

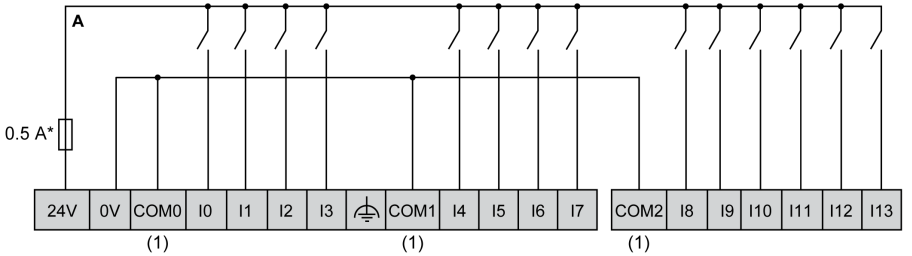

* Type T fuse

(1) The COM0, COM1 and COM2 terminals are **not** connected internally.

The following figure shows the source wiring (negative logic) of the controller digital inputs:

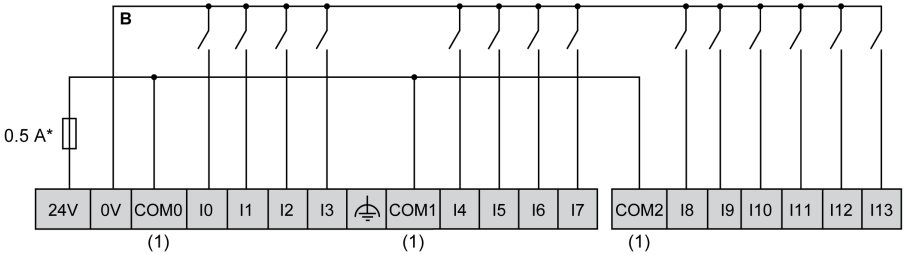

* Type T fuse

(1) The COM0, COM1 and COM2 terminals are **not** connected internally.

Fast input wiring for I0... I7:

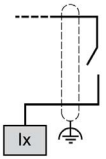

TM241C•40R Wiring Diagrams

The following figure shows the sink wiring (positive logic) of the controller digital inputs:

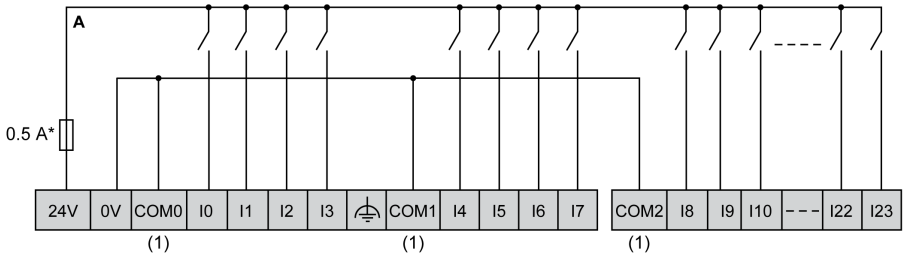

* Type T fuse

(1) The COM0, COM1 and COM2 terminals are **not** connected internally.

The following figure shows the source wiring (negative logic) of the controller digital inputs:

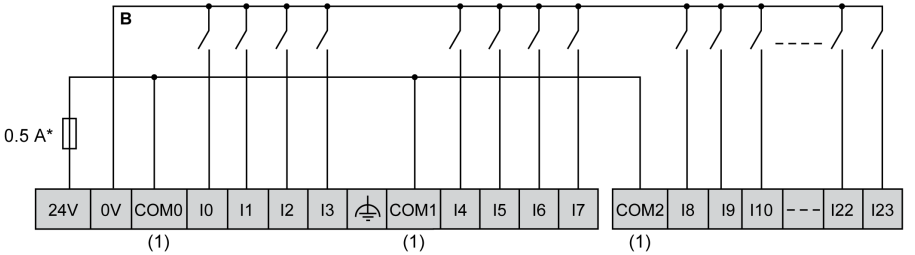

* Type T fuse
(1) The COM0, COM1 and COM2 terminals are **not** connected internally.

Fast input wiring for I0... I7:

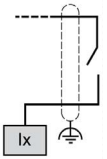

TM241C••24T / TM241C••24U Wiring Diagrams

The following figure shows the connection of the controller digital inputs:

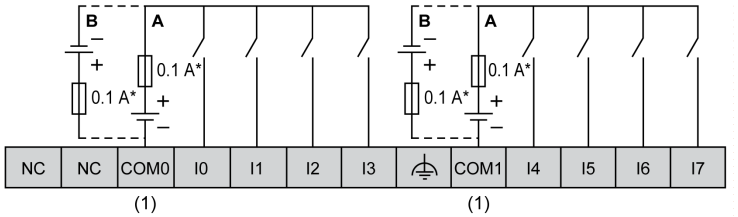

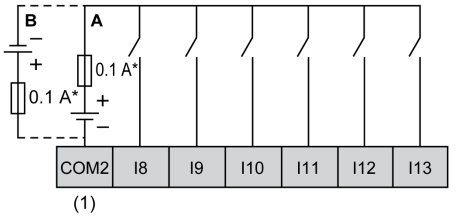

* Type T fuse
(1) The COM0, COM1 and COM2 terminals are **not** connected internally.
A Sink wiring (positive logic).
B Source wiring (negative logic).

Fast input wiring for I0... I7:

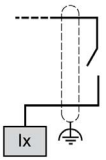

⚠ WARNING

UNINTENDED EQUIPMENT OPERATION

Do not connect wires to unused terminals and/or terminals indicated as “No Connection (N.C.)”.

Failure to follow these instructions can result in death, serious injury, or equipment damage.

TM241C•40T / TM241C•40U Wiring Diagrams

The following figure shows the connection of the controller digital inputs:

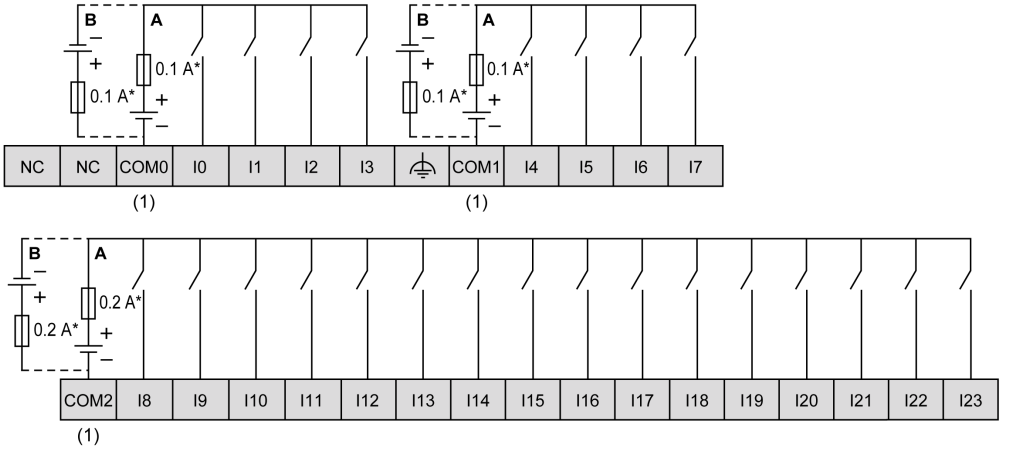

* Type T fuse

(1) The COM0, COM1 and COM2 terminals are **not** connected internally.

A Sink wiring (positive logic).

B Source wiring (negative logic).

Fast input wiring for I0... I7:

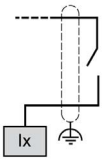

⚠ WARNING

UNINTENDED EQUIPMENT OPERATION

Do not connect wires to unused terminals and/or terminals indicated as “No Connection (N.C.)”.

Failure to follow these instructions can result in death, serious injury, or equipment damage.

Relay Outputs

Overview

The Modicon M241 Logic Controller has digital outputs embedded:

Reference	Total number of digital outputs	Fast transistor outputs *(see page 214)* (1)	Relay outputs *(see page 203)*	Regular transistor outputs *(see page 209)*
TM241C••24R	10	4	6	0
TM241C••24T TM241C••24U	10	4	0	6
TM241C•40R	16	4	12	0
TM241C•40T TM241C•40U	16	4	0	12
(1) Fast transistor outputs which can be used as 100 kHz PTO outputs				

For more information, refer to Output Management *(see page 52)*.

⚠ DANGER

FIRE HAZARD

- Use only the correct wire sizes for the current capacity of the I/O channels and power supplies.
- For relay output (2 A) wiring, use conductors of at least 0.5 mm^2 (AWG 20) with a temperature rating of at least 80 °C (176 °F).
- For common conductors of relay output wiring (7 A), or relay output wiring greater than 2 A, use conductors of at least 1.0 mm^2 (AWG 16) with a temperature rating of at least 80 °C (176 °F).

Failure to follow these instructions will result in death or serious injury.

⚠ WARNING

UNINTENDED EQUIPMENT OPERATION

Do not exceed any of the rated values specified in the environmental and electrical characteristics tables.

Failure to follow these instructions can result in death, serious injury, or equipment damage.

Relay Outputs Status LEDs

The following figure shows the status LEDs for the TM241C••24• controller (the TM241C•40• controllers are similar with 40 LEDs):

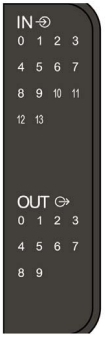

LED	Color	Status	Description
0...9	Green	On	The output channel is activated
		Off	The output channel is deactivated

Relay Outputs Characteristics

The following table describes the characteristics of the M241 Logic Controller relay outputs:

Characteristic	Value	
	TM241C••24R	TM241C•40R
Number of relay output channels	6 outputs (Q4...Q9)	12 outputs (Q4...Q15)
Number of channel groups	1 common line for Q4, Q5 1 common line for Q6, Q7 1 line for Q8 1 line for Q9	1 common line for Q4...Q7 1 common line for Q8, Q9 1 common line for Q10, Q11 1 common line for Q12, Q13 1 line for Q14 1 line for Q15
Output type	Relay	
Contact type	NO (Normally Open)	
Rated output voltage	24 Vdc, 240 Vac	
Maximum voltage	30 Vdc, 264 Vac	

1 Refer to Protecting Outputs from Inductive Load Damage *(see page 87)* for additional information concerning output protection.
2 When Q4, Q5, Q6 and Q7 are on the same common line (max output current 4 A), those 4 outputs used simultaneously have a derating of 50%.
3 Outputs Q4 and Q6 used as PTO/PWM/FG can result in a premature wear of those relay outputs.

Characteristic		Value	
		TM241C••24R	TM241C•40R
Minimum switching load		5 Vdc at 10 mA	
Derating		No derating	Derating on Q4...Q7, refer to the note 2.
Rated output current		2 A	
Maximum output current		2 A per output	
		4 A per common	
Maximum output frequency with maximum load		20 operations per minute	
Turn on time		Max. 10 ms	
Turn off time		Max. 10 ms	
Contact resistance		30 mΩ max	
Mechanical life		20 million operations	
Electrical life	Under resistive load	See power limitation	
	Under inductive load		
Protection against short circuit		No	
Isolation	Between output and internal logic	500 Vac	
	Between channel groups	1500 Vac	
Connection type		Removable screw terminal blocks	
Connector insertion/removal durability		Over 100 times	
Cable	Type	Unshielded	
	Length	Max. 30 m (98 ft)	

1 Refer to Protecting Outputs from Inductive Load Damage *(see page 87)* for additional information concerning output protection.
2 When Q4, Q5, Q6 and Q7 are on the same common line (max output current 4 A), those 4 outputs used simultaneously have a derating of 50%.
3 Outputs Q4 and Q6 used as PTO/PWM/FG can result in a premature wear of those relay outputs.

Power Limitation

The following table describes the power limitation of the relay outputs depending on the voltage, the type of load, and the number of operations required.

These controllers do not support capacitive loads.

⚠ WARNING

RELAY OUTPUTS WELDED CLOSED

- Always protect relay outputs from inductive alternating current load damage using an appropriate external protective circuit or device.
- Do not connect relay outputs to capacitive loads.

Failure to follow these instructions can result in death, serious injury, or equipment damage.

Power Limitations				
Voltage	**24 Vdc**	**120 Vac**	**240 Vac**	**Number of operations**
Power of resistive loads AC-12	–	240 VA 80 VA	480 VA 160 VA	100,000 300,000
Power of inductive loads AC-15 (cos ϕ = 0.35)	–	60 VA 18 VA	120 VA 36 VA	100,000 300,000
Power of inductive loads AC-14 (cos ϕ = 0.7)	–	120 VA 36 VA	240 VA 72 VA	100,000 300,000
Power of resistive loads DC-12	48 W 16 W	–	–	100,000 300,000
Power of inductive loads DC-13 L/R = 7 ms	24 W 7.2 W	–	–	100,000 300,000

Removing Terminal Block

Refer to Removing Terminal Block *(see page 86)*.

TM241C••24R Relay Outputs Wiring Diagrams

The following figure shows the wiring of the outputs:

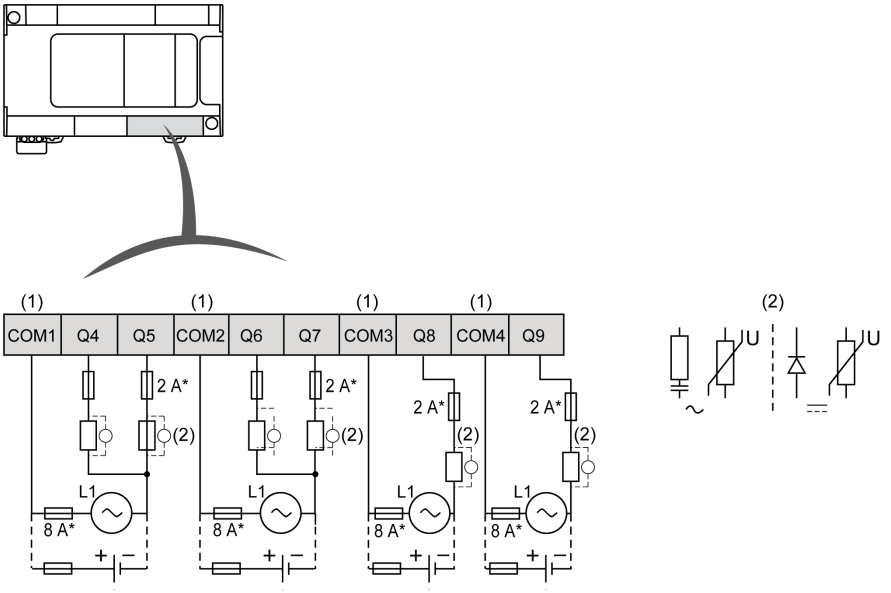

* Type T fuse

(1) The terminals COM1 to COM4 are **not** connected internally.

(2) To improve the life time of the contacts, and to protect from potential inductive load damage, you must connect a free wheeling diode in parallel to each inductive DC load or an RC snubber in parallel of each inductive AC load

Refer to Protecting Outputs from Inductive Load Damage *(see page 87)* for additional information concerning output protection.

NOTE: The assigned fuse values have been specified for the maximum current characteristics of the controller I/O and associated commons. You may have other considerations that are applicable based on the unique types of input and output devices you connect, and you should size your fuses accordingly.

TM241C•40R Relay Outputs Wiring Diagrams

The following figure shows the wiring of the outputs:

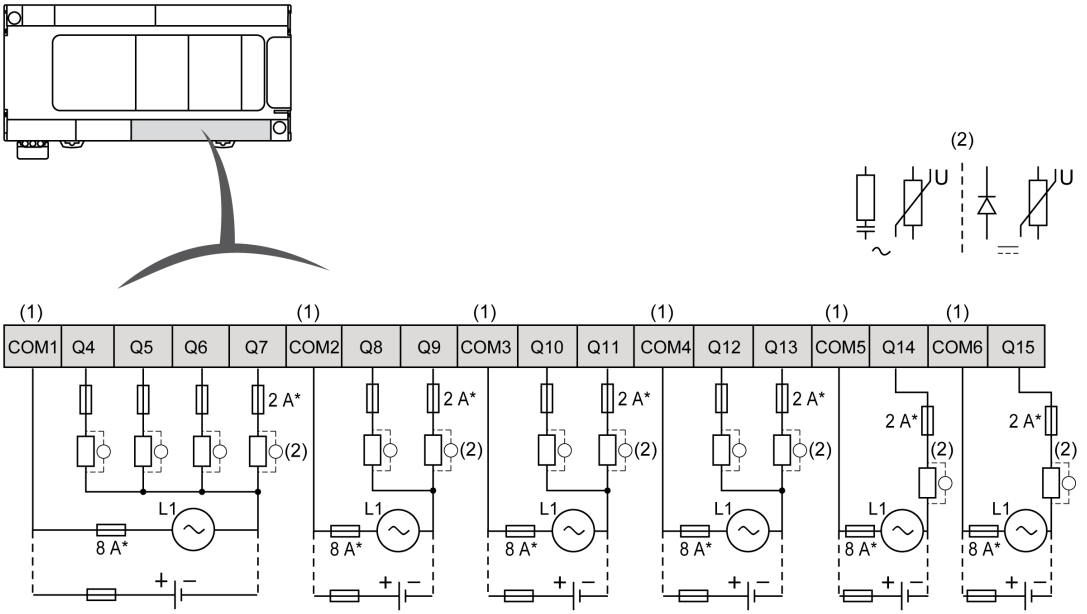

* Type T fuse

(1) The terminals COM1 to COM6 are **not** connected internally.

(2) To improve the life time of the contacts, and to protect from potential inductive load damage, you must connect a free wheeling diode in parallel to each inductive DC load or an RC snubber in parallel of each inductive AC load

Refer to Protecting Outputs from Inductive Load Damage *(see page 87)* for additional information concerning output protection.

NOTE: The assigned fuse values have been specified for the maximum current characteristics of the controller I/O and associated commons. You may have other considerations that are applicable based on the unique types of input and output devices you connect, and you should size your fuses accordingly.

Regular Transistor Outputs

Overview

The Modicon M241 Logic Controller has digital outputs embedded:

Reference	Total number of digital outputs	Fast transistor outputs *(see page 214)* (1)	Relay outputs *(see page 203)*	Regular transistor outputs *(see page 209)*
TM241C••24R	10	4	6	0
TM241C••24T TM241C••24U	10	4	0	6
TM241C•40R	16	4	12	0
TM241C•40T TM241C•40U	16	4	0	12
(1) Fast transistor outputs which can be used as 100 kHz PTO outputs				

For more information, refer to Output Management *(see page 52)*.

⚠ DANGER

FIRE HAZARD

- Use only the correct wire sizes for the current capacity of the I/O channels and power supplies.
- For relay output (2 A) wiring, use conductors of at least 0.5 mm^2 (AWG 20) with a temperature rating of at least 80 °C (176 °F).
- For common conductors of relay output wiring (7 A), or relay output wiring greater than 2 A, use conductors of at least 1.0 mm^2 (AWG 16) with a temperature rating of at least 80 °C (176 °F).

Failure to follow these instructions will result in death or serious injury.

⚠ WARNING

UNINTENDED EQUIPMENT OPERATION

Do not exceed any of the rated values specified in the environmental and electrical characteristics tables.

Failure to follow these instructions can result in death, serious injury, or equipment damage.

Regular Transistor Outputs Status LEDs

The following figure shows the status LEDs for the TM241C••24• controller (the TM241C•40• controllers are similar with 40 LEDs):

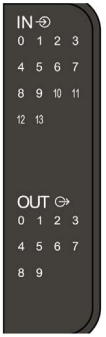

LED	Color	Status	Description
0...9	Green	On	The output channel is activated
		Off	The output channel is deactivated

Regular Transistor Outputs Characteristics

The following table describes the characteristics of the M241 Logic Controller regular transistor outputs:

Characteristic	TM241C••24T	TM241C••24U	TM241C•40T	TM241C•40U
Number of regular transistor outputs	6 outputs (Q4...Q9)		12 outputs (Q4...Q15)	
Number of channel groups	1 common line for Q4...Q7 common line for Q8, Q9		1 common line for Q4...Q7 common line for Q8...Q11 common line for Q12...Q15	
Output type	Transistor			
Logic type	Source	Sink	Source	Sink
Rated output voltage	24 Vdc			
Output voltage range	19.2...28.8 Vdc			
Rated output current	0.5 A			
Total output current per group	0.5A x number of outputs of the group			
Voltage drop	1 Vdc max			
Leakage current when switched off	< 5 µA			
Maximum power of filament lamp	2.4 W max			
Derating	No derating			

Characteristic		TM241C••24T	TM241C••24U	TM241C•40T	TM241C•40U
Turn on time		Max. 34 µs			
Turn off time		Max. 250 µs			
Protection against short circuit		Yes			
Short circuit output peak current		1.3 A			
Automatic rearming after short circuit or overload		Yes, every 10 ms			
Clamping voltage		Max. 39 Vdc +/- 1 Vdc			
Maximum output frequency		1 kHz			
Isolation	Between output and internal logic	500 Vac			
	Between output terminals	Not isolated			
Connection type		Removable screw terminal block			
Connector insertion/removal durability		Over 100 times			
Cable	Type	Unshielded			
	Length	Max 50 m (164 ft)			

Removing Terminal Block

Refer to Removing Terminal Block *(see page 86)*.

TM241C••24T Regular Transistor Outputs Source Wiring Diagram

The following figure shows the source wiring (positive logic) of the outputs:

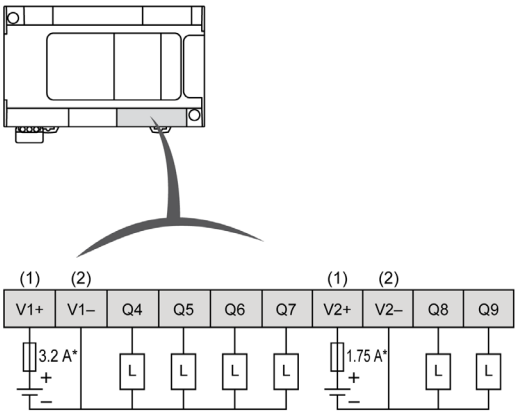

* Type T fuse

(1) The V1+ and V2+ terminals are **not** connected internally.

(2) The V1– and V2– terminals are **not** connected internally.

TM241C•40T Regular Transistor Outputs Source Wiring Diagram

The following figure shows the source wiring (positive logic) of the outputs:

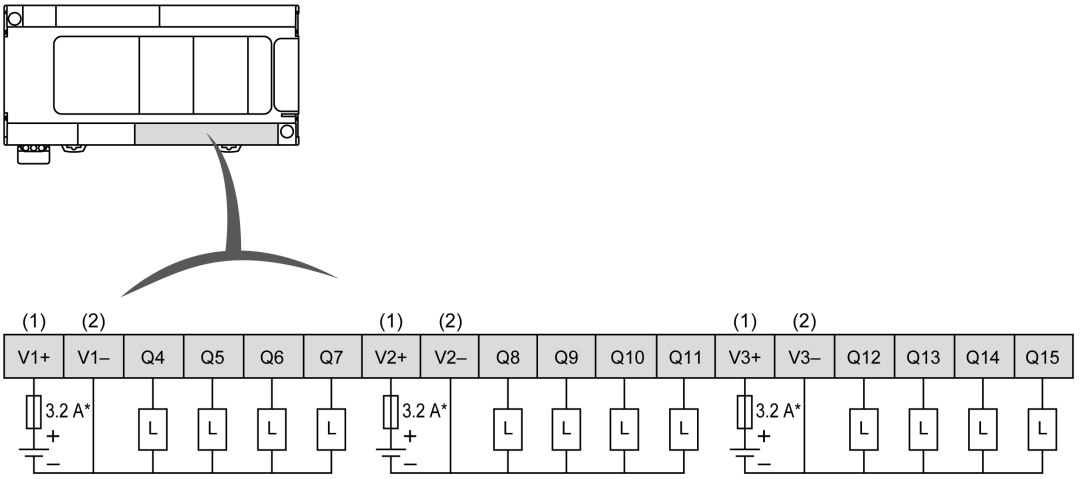

***** Type T fuse

(1) The V1+, V2+ and V3+ terminals are **not** connected internally.

(2) The V1–, V2– and V3– terminals are **not** connected internally.

TM241C••24U Regular Transistor Outputs Sink Wiring Diagrams

The following figure shows the sink wiring (negative logic) of the outputs:

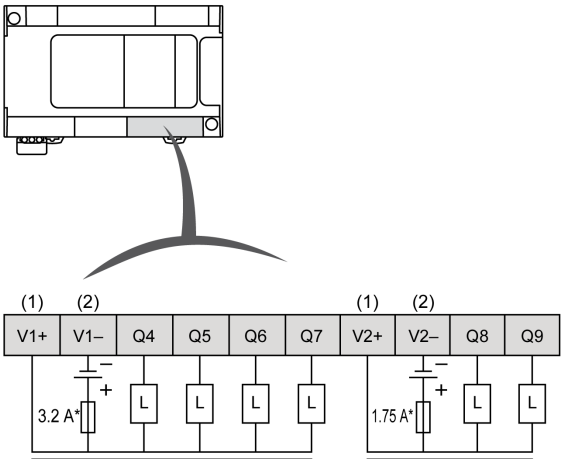

***** Type T fuse

(1) The V1+ and V2+ terminals are **not** connected internally.

(2) The V1– and V2– terminals are **not** connected internally.

TM241C•40U Regular Transistor Outputs Sink Wiring Diagrams

The following figure shows the sink wiring (negative logic) of the outputs:

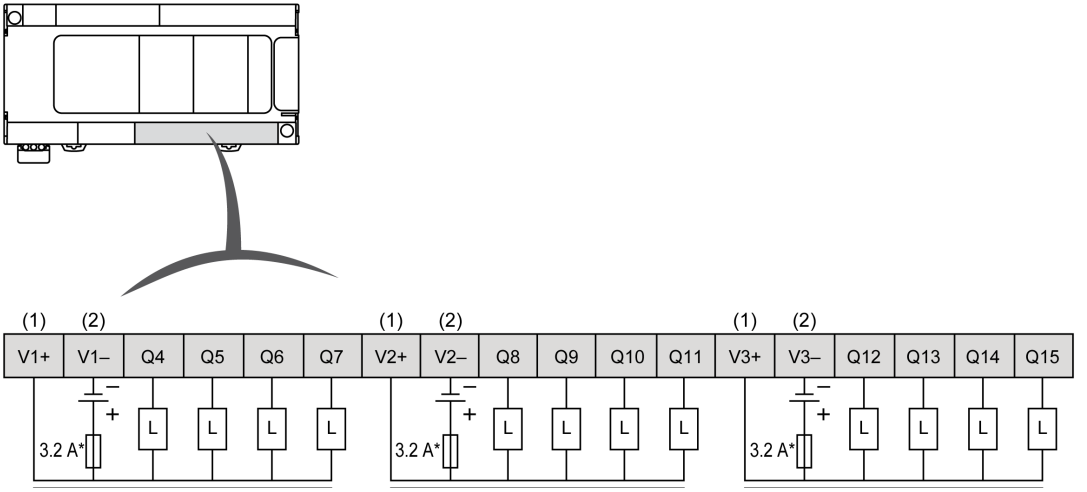

* Type T fuse

(1) The V1+, V2+ and V3+ terminals are **not** connected internally.

(2) The V1–, V2– and V3– terminals are **not** connected internally.

Fast Transistor Outputs

Overview

The Modicon M241 Logic Controller has digital outputs embedded:

Reference	Total number of digital outputs	Fast transistor outputs *(see page 214)* (1)	Relay outputs *(see page 203)*	Regular transistor outputs *(see page 209)*
TM241C••24R	10	4	6	0
TM241C••24T TM241C••24U	10	4	0	6
TM241C•40R	16	4	12	0
TM241C•40T TM241C•40U	16	4	0	12
(1) Fast transistor outputs which can be used as 100 kHz PTO outputs				

For more information, refer to Output Management *(see page 52)*.

⚠ DANGER

FIRE HAZARD

- Use only the correct wire sizes for the current capacity of the I/O channels and power supplies.
- For relay output (2 A) wiring, use conductors of at least 0.5 mm^2 (AWG 20) with a temperature rating of at least 80 °C (176 °F).
- For common conductors of relay output wiring (7 A), or relay output wiring greater than 2 A, use conductors of at least 1.0 mm^2 (AWG 16) with a temperature rating of at least 80 °C (176 °F).

Failure to follow these instructions will result in death or serious injury.

⚠ WARNING

UNINTENDED EQUIPMENT OPERATION

Do not exceed any of the rated values specified in the environmental and electrical characteristics tables.

Failure to follow these instructions can result in death, serious injury, or equipment damage.

Fast Transistor Outputs Status LEDs

The following figure shows the status LEDs for the TM241C••24• controller (the TM241C•40• controllers are similar with 40 LEDs):

LED	Color	Status	Description
0...9	Green	On	The output channel is activated
		Off	The output channel is deactivated

Fast Transistor Outputs Characteristics

The following table describes the characteristics of the M241 Logic Controller fast transistor outputs:

Characteristic		Value		
		TM241C•••R	TM241C•••T	TM241C•••U
Number of fast transistor outputs		4 outputs (TR0...TR3)	4 outputs (Q0...Q3)	
Number of channel groups		1 common line for TR0...TR3	1 common line for Q0...Q3	
Output type		Transistor		
Logic type		Source	Source	Sink
Rated output voltage		24 Vdc		
Output voltage range		19.2...28.8 Vdc		
Rated output current		0.1 A when configured for a fast function		
		0.5 A when used as a regular output		
Leakage current	Source	≤ 0.3 mA		
	Sink	≤ 2 mA		
Total output current per group		2 A		

Characteristic		Value		
		TM241C•••R	TM241C•••T	TM241C•••U
Maximum power of filament lamp		2.4 W max		
Derating		No Derating		
Turn on time		Max. 2 µs		
Turn off time		Max. 2 µs		
Protection against short circuit		Yes		
Short circuit output peak current		1.3 A max.		
Automatic rearming after short circuit or overload		Yes, 12 s		
Protection against reverse polarity		Yes		
Clamping voltage		Typically 39 Vdc +/- 1 Vdc		
Maximum output frequency	PTO	100 kHz		
	PWM	20 kHz		
PWM mode duty rate step		0.1% at 20...1 kHz		
Duty rate range		1...99 %		
Isolation	Between output and internal logic	500 Vac		
	Between channel groups	500 Vac		
Connection type		Removable screw terminal block		
Connector insertion/removal durability		Over 100 times		
Cable	Type	Shielded, including 24 Vdc power supply		
	Length	Maximum 3 m (9.84 ft)		

Removing Terminal Block

Refer to Removing Terminal Block *(see page 86)*.

TM241C••24R / TM241C•40R Fast Transistor Outputs Wiring Diagrams

The following figure shows the connection of the fast transistor outputs:

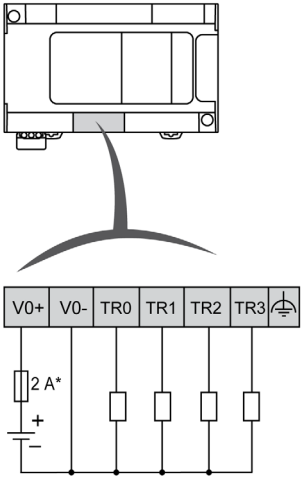

* 2 A fast-blow fuse

Fast output wiring for TR0... TR3:

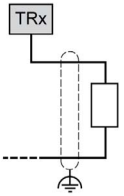

TM241C••••T Fast Transistor Outputs Wiring Diagrams

The following figure shows the connection of the fast transistor outputs:

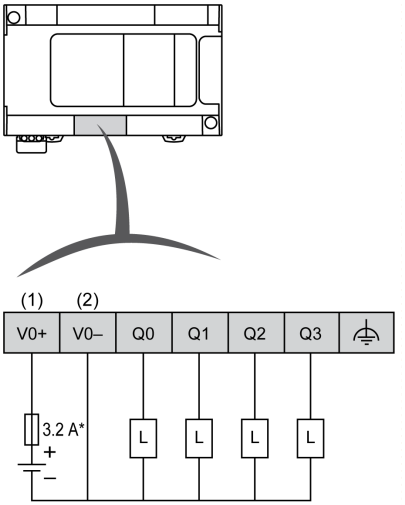

* Type T fuse

(1) The V0+, V1+, V2+ and V3+ terminals are **not** connected internally.

(2) The V0-, V1-, V2- and V3- terminals are **not** connected internally.

Fast output wiring for Q0... Q3:

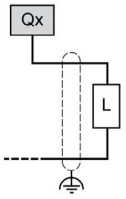

TM241C••••U Fast Transistor Outputs Wiring Diagrams

The following figure shows the connection of the fast transistor outputs:

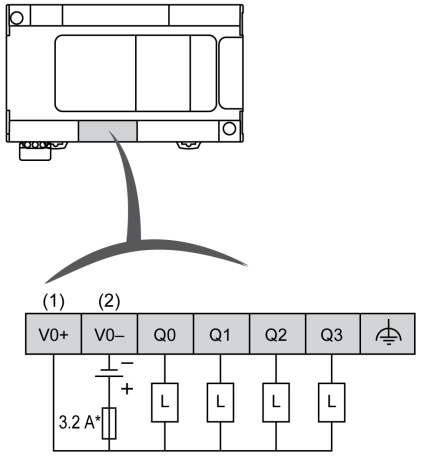

* Type T fuse

(1) The V0+, V1+, V2+ and V3+ terminals are **not** connected internally.

(2) The V0-, V1-, V2- and V3- terminals are **not** connected internally.

Fast output wiring for Q0... Q3:

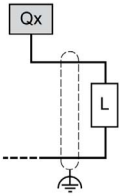

Part III
Modicon M241 Logic Controller Communication

What Is in This Part?

This part contains the following chapters:

Chapter	Chapter Name	Page
20	Integrated Communication Ports	221
21	Connecting the M241 Logic Controller to a PC	237

Chapter 20
Integrated Communication Ports

What Is in This Chapter?

This chapter contains the following topics:

Topic	Page
CAN Port	222
Ethernet Port	226
USB Mini-B Programming Port	229
Serial Line 1	231
Serial Line 2	234

CAN Port

CANopen Capabilities

The Modicon M241 Logic Controller CANopen master has the following features:

Feature	Description
Maximum number of slaves on the bus	63 CANopen slave devices
Maximum length of CANopen fieldbus cables	According to the CAN specification (see Transmission Speed and Cable Length *(see page 225)*).
Maximum number of PDOs managed by the master	252 TPDOs + 252 RPDOs

For each additional CANopen slave:

- the application size increases by an average of 10 kbytes, which conceivably could result in exceeding memory limits.
- the configuration initialization time at the startup increases, which conceivably could result in watchdog timeout.

Although SoMachine does not restrict you from doing so, do not exceed more than 63 CANopen slave modules (and/or 252 TPDOs and 252 RPDOs) in order to have a sufficient performance tolerance and avoid any performance degradation.

⚠ WARNING

UNINTENDED EQUIPMENT OPERATION

Do not connect more than 63 CANopen slave devices to the controller to avoid system overload watchdog condition.

Failure to follow these instructions can result in death, serious injury, or equipment damage.

NOTICE

DEGRADATION OF PERFORMANCE

Do not exceed more than 252 TPDOs and 252 RPDOs for the Modicon M241 Logic Controller.

Failure to follow these instructions can result in equipment damage.

J1939 Capabilities

NOTE: J1939 capabilities are available with the J1939 Add-on for SoMachine 4.3.

The Modicon M241 Logic Controller J1939 master has the following features:

Feature	Description
Maximum number of ECUs (slaves) on the bus	Limited only by the address range of 0...253 for Electronic Control Units (ECUs).
Maximum length of J1939 fieldbus cables	According to the CAN specification (see Transmission Speed and Cable Length *(see page 225)*). For J1939, the CAN bus must be configured to run at 250 Kbps.
Maximum number of PGNs managed by the master	Given implicitly by the maximum number of input bits (%I) and output bits (%Q) available on the Modicon M241 Logic Controller: 4096 input bits and 4096 output bits. This results in a maximum of 512 single-packet PGNs (most PGNs are single-packet, containing 8 bytes of data).

For each additional ECU with approximately 10 configured (single frame) Parameter Group Numbers (PGNs):

- the application size increases by an average of 15 Kbytes. This figure includes the memory consumed by implicitly-generated variables for configured Suspected Parameter Numbers (SPNs). This application size increase could result in exceeding memory limits.
- the number of input bits (%I) used on the logic controller increases in proportion to the number and size of PGNs configured as "TX Signals" in a non-local ECU or "RX Signals" in a local ECU.
- the number of output bits (%Q) used on the logic controller increases in proportion to the number and size of PGNs configured as "TX Signals" in a local ECU.

NOTE: Thoroughly test your application regarding the number of configured J1939 ECUs connected to the controller, and the number of PGNs configured on each ECU, to avoid a system overload watchdog condition or performance degradation.

For more information, refer to J1939 Interface Configuration *(see Modicon M241 Logic Controller, Programming Guide)*.

Removing Terminal Block

Refer to Removing Terminal Block *(see page 86)*.

CAN Wiring Diagram

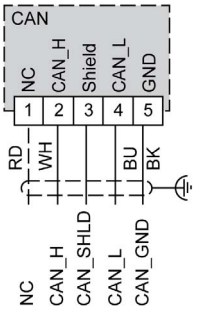

Pin	Signal	Description	Marking	Color of Cable
1	Not used	Reserved	NC	RD: red
2	CAN_H	CAN_L bus line (dominant low)	CAN_H	WH: white
3	CAN_SHLD	Optional CAN shield	Shield	-
4	CAN_L	CAN_L bus line (dominant low)	CAN_L	BU: blue
5	CAN_GND	CAN Ground	GND	BK: black

⚠ WARNING

UNINTENDED EQUIPMENT OPERATION

Do not connect wires to unused terminals and/or terminals indicated as “No Connection (N.C.)”.

Failure to follow these instructions can result in death, serious injury, or equipment damage.

Transmission Speed and Cable Length

Transmission speed is limited by the bus length and the type of cable used.

The following table describes the relationship between the maximum transmission speed and the bus length (on a single CAN segment without a repeater):

Maximum transmission baud rate	Bus length
1000 Kbps	20 m (65 ft)
800 Kbps	40 m (131 ft)
500 Kbps	100 m (328 ft)
250 Kbps	250 m (820 ft)
125 Kbps	500 m (1,640 ft)
50 Kbps	1000 m (3280 ft)
20 Kbps	2500 m (16,400 ft)

NOTE: The CAN cable must be shielded.

Ethernet Port

Overview

The TM241CE••• are equipped with an Ethernet communications port.

The following figure shows the location of the Ethernet port on the controller:

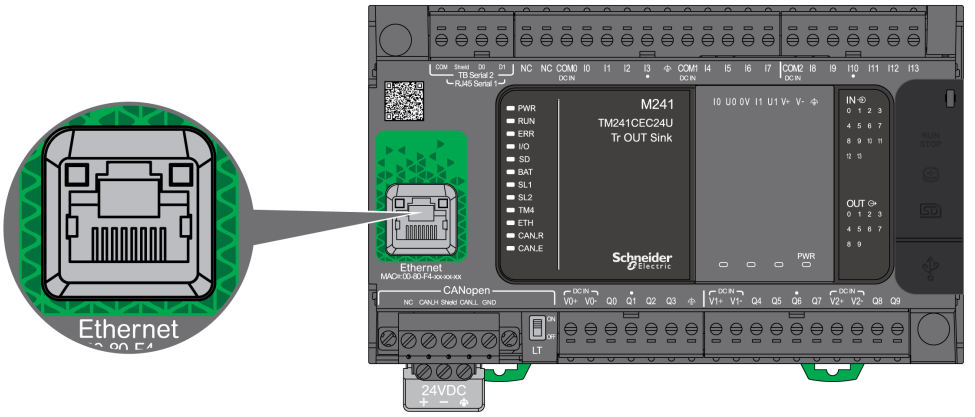

Characteristics

The following table describes the Ethernet characteristics:

Characteristic	Description
Function	Modbus TCP/IP
Connector type	RJ45
Auto negotiation	from 10 M half duplex to 100 M full duplex
Cable type	Shielded
Automatic cross-over detection	Yes

Pin Assignment

The following figure shows the RJ45 Ethernet connector pin assignment:

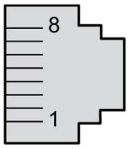

The following table describes the RJ45 Ethernet connector pins:

Pin N°	Signal
1	TD+
2	TD-
3	RD+
4	-
5	-
6	RD-
7	-
8	-

NOTE: The controller supports the MDI/MDIX auto-crossover cable function. It is not necessary to use special Ethernet crossover cables to connect devices directly to this port (connections without an Ethernet hub or switch).

NOTE: Ethernet cable disconnection is detected every second. In case of disconnection of a short duration (< 1 second), the network status may not indicate the disconnection.

Status LED

The following figure shows the RJ45 connector status LED:

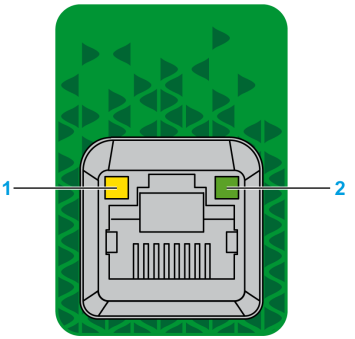

The following table describes the Ethernet status LED:

Label	Description	LED		
		Color	Status	Description
1	Ethernet Link	Green/Yellow	Off	No link
			Solid yellow	Link at 10 Mbit/s
			Solid green	Activity at 100 Mbit/s
2	Ethernet Activity	Green	Off	No activity
			On	Transmitting or receiving data

USB Mini-B Programming Port

Overview

The USB Mini-B Port is the programming port you can use to connect a PC with a USB host port using SoMachine software. Using a typical USB cable, this connection is suitable for quick updates of the program or short duration connections to perform maintenance and inspect data values. It is not suitable for long-term connections such as commissioning or monitoring without the use of specially adapted cables to help minimize electromagnetic interference.

⚠ WARNING

UNINTENDED EQUIPMENT OPERATION OR INOPERABLE EQUIPMENT

- You must use a shielded USB cable such as a BMX XCAUSBH0•• secured to the functional ground (FE) of the system for any long-term connection.
- Do not connect more than one controller at a time using USB connections.
- Do not use the USB port(s), if so equipped, unless the location is known to be non-hazardous.

Failure to follow these instructions can result in death, serious injury, or equipment damage.

The following figure shows the location of the USB Mini-B programming port:

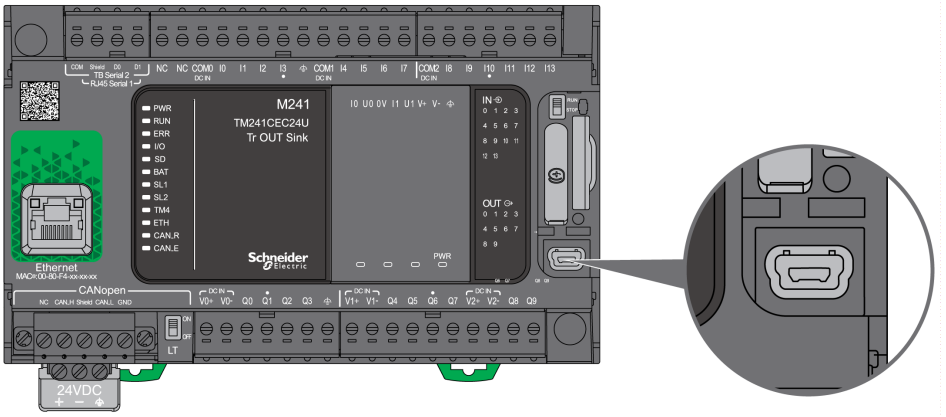

Characteristics

This table describes the characteristics of the USB Mini-B programming port:

Parameter	USB Programming Port
Function	Compatible with USB 2.0
Connector type	Mini-B
Isolation	None
Cable type	Shielded

Serial Line 1

Overview

The serial line 1:

- can be used to communicate with devices supporting the Modbus protocol as either master or slave, ASCII protocol (printer, modem...) and SoMachine Protocol (HMI,...).
- provides a 5 Vdc power distribution.

The following figure shows the location of the serial line 1 port:

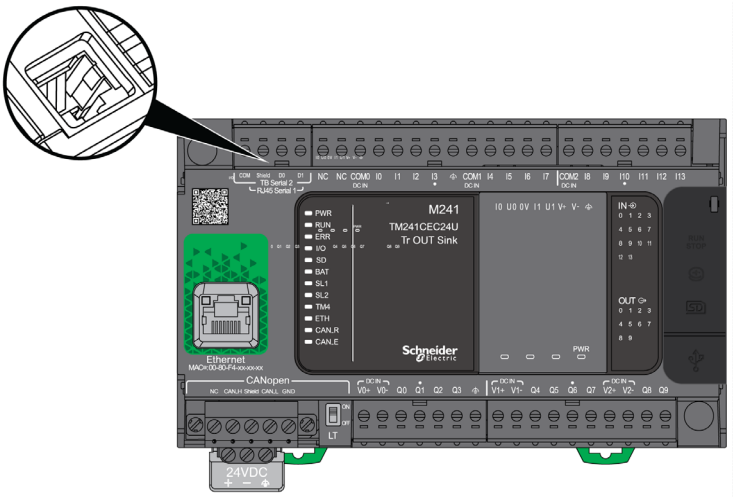

Characteristics

Characteristic		Description
Function		RS485 or RS232 software configured
Connector type		RJ45
Isolation		Non-isolated
Maximum baud rate		1200 up to 115 200 bps
Cable	Type	Shielded
	Maximum length (between the controller and an isolated junction box)	15 m (49 ft) for RS485 3 m (9.84 ft) for RS232
Polarization		Software configuration is used to connect when the node is configured as a Master. 560 Ω resistors are optional.
5 Vdc power supply for RS485		Yes

NOTE: Some devices provide voltage on RS485 serial connections. Do not connect these voltage lines to your controller as they may damage the controller serial port electronics and render the serial port inoperable.

NOTICE
INOPERABLE EQUIPMENT Use only the VW3A8306R•• serial cable to connect RS485 devices to your controller. **Failure to follow these instructions can result in equipment damage.**

Pin Assignment

The following figure shows the pins of the RJ45 connector:

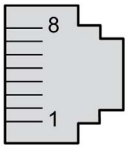

The table below describes the pin assignment of the RJ45 connector:

Pin	RS232	RS485
1	RxD	N.C.
2	TxD	N.C.
3	N.C.	N.C.
4	N.C.	D1
5	N.C.	D0
6	N.C.	N.C.
7	N.C.*	5 Vdc
8	Common	Common
* 5 Vdc delivered by the controller. Do not connect.		

N.C.: No Connection

RxD: Received Data

TxD: Transmitted Data

⚠ WARNING
UNINTENDED EQUIPMENT OPERATION
Do not connect wires to unused terminals and/or terminals indicated as “No Connection (N.C.)”.
Failure to follow these instructions can result in death, serious injury, or equipment damage.

Status LED

The following figure shows the status LED of the serial line 1:

The table below describes the status LED of the serial line 1:

Label	Description	LED		
		Color	Status	Description
SL1	Serial Line 1	Green	On	Indicates the activity of the serial line 1
			Off	Indicates no serial communication

Serial Line 2

Overview

The serial line 2 is used to communicate with devices supporting the Modbus protocol as either a master or slave and ASCII Protocol (printer, modem...) and supports RS485 only.

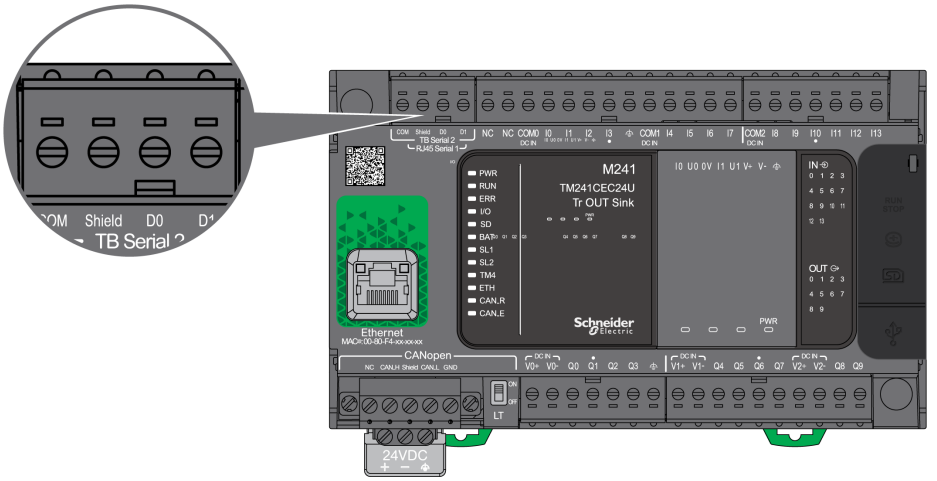

Characteristics

Characteristic		Description
Function		RS485
Connector type		Removable screw terminal block
Isolation		Non-isolated
Maximum baud rate		1200 up to 115 200 bps
Cable	Type	Shielded
	Maximum length	15 m (49 ft) for RS485
Polarization		Software configuration is used to connect when the node is configured as a Master. 560 Ω resistors are optional.
5 Vdc power supply for RS485		No

Pin Assignment

The following figure shows the pins of the removable terminal block:

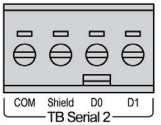

Pin	RS485
COM	0 V com.
Shield	Shield
D0	D0 (B-)
D1	D1 (A+)

Refer to Removing Terminal Block *(see page 86)*.

Status LED

The following graphic show the status LED:

The table below describes the serial line 2 status LED:

Label	Description	LED		
		Color	Status	Description
SL2	Serial Line 2	Green	On	Indicates the activity of the serial line 2.
			Off	Indicates no serial communication.

Chapter 21
Connecting the M241 Logic Controller to a PC

Connecting the Controller to a PC

Overview

To transfer, run, and monitor the applications, connect the controller to a computer, that has SoMachine installed, using either a USB cable or an Ethernet connection (for those references that support an Ethernet port).

NOTICE
INOPERABLE EQUIPMENT Always connect the communication cable to the PC before connecting it to the controller. **Failure to follow these instructions can result in equipment damage.**

USB Powered Download

In order to execute limited operations, the M241 Logic Controller has the capability to be powered through the USB Mini-B port. A diode mechanism avoids having the logic controller both powered by USB and by the normal power supply, or to supply voltage on the USB port.

When powered only by USB, the logic controller executes the firmware and the boot project (if any) and the I/O board is not powered during boot (same duration as a normal boot). USB powered download initializes the internal flash memory with some firmware or some application and parameters when the controller is powered by USB. The preferred tool to connect to the controller is the **Controller Assistant**. Refer to the *SoMachine Controller Assistant User Guide*.

The controller packaging allows easy access to USB Mini-B port with minimum opening of the packaging. You can connect the controller to the PC with a USB cable. Long cables are not suitable for the USB powered download.

⚠ WARNING
INSUFFICENT POWER FOR USB DOWNLOAD Do not use a USB cable longer than 3m (9.8 ft) for USB powered download. **Failure to follow these instructions can result in death, serious injury, or equipment damage.**

NOTE: It is not intended that you use the USB Powered Download on an installed controller. Depending on the number of I/O expansion modules in the physical configuration of the installed controller, there may be insufficient power from your PC USB port to accomplish the download.

USB Mini-B Port Connection

TCSXCNAMUM3P: This USB cable is suitable for short duration connections such as quick updates or retrieving data values.

BMXXCAUSBH018: Grounded and shielded, this USB cable is suitable for long duration connections.

NOTE: You can only connect 1 controller or any other device associated with SoMachine and its component to the PC at any one time.

The USB Mini-B Port is the programming port you can use to connect a PC with a USB host port using SoMachine software. Using a typical USB cable, this connection is suitable for quick updates of the program or short duration connections to perform maintenance and inspect data values. It is not suitable for long-term connections such as commissioning or monitoring without the use of specially adapted cables to help minimize electromagnetic interference.

⚠ WARNING

UNINTENDED EQUIPMENT OPERATION OR INOPERABLE EQUIPMENT

- You must use a shielded USB cable such as a BMX XCAUSBH0•• secured to the functional ground (FE) of the system for any long-term connection.
- Do not connect more than one controller at a time using USB connections.
- Do not use the USB port(s), if so equipped, unless the location is known to be non-hazardous.

Failure to follow these instructions can result in death, serious injury, or equipment damage.

The communication cable should be connected to the PC first to minimize the possibility of electrostatic discharge affecting the controller.

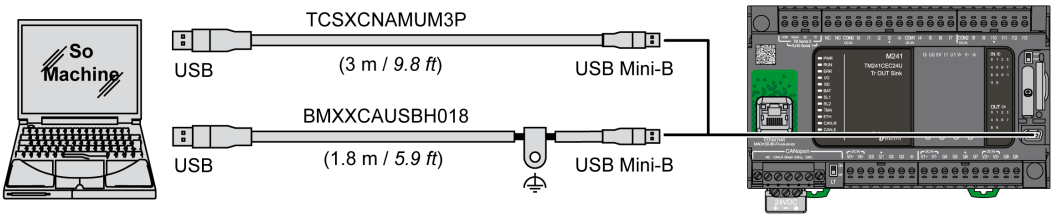

To connect the USB cable to your controller, follow the steps below:

Step	Action
1	**1a** If making a long-term connection using the cable BMXXCAUSBH018, or other cable with a ground shield connection, be sure to securely connect the shield connector to the functional ground (FE) or protective ground (PE) of your system before connecting the cable to your controller and your PC. **1b** If making a short-term connection using the cable TCSXCNAMUM3P or other non-grounded USB cable, proceed to step 2.

Step	Action
2	Connect your USB cable to the computer.
3	Open the hinged access cover.
4	Connect the Mini connector of your USB cable to the controller USB connector.

Ethernet Port Connection

You can also connect the controller to a PC using an Ethernet cable.

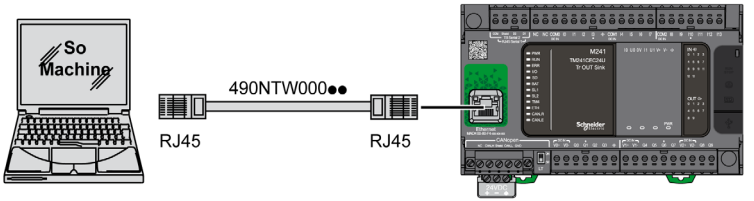

To connect the controller to the PC, do the following:

Step	Action
1	Connect the Ethernet cable to the PC.
2	Connect the Ethernet cable to the Ethernet port on the controller.

Glossary

A

application

A program including configuration data, symbols, and documentation.

ASCII

(*American standard code for Information Interchange*) A protocol for representing alphanumeric characters (letters, numbers, certain graphics, and control characters).

B

bps

(*bit per second*) A definition of transmission rate, also given in conjunction with multiplicator kilo (kbps) and mega (mbps).

C

CANopen

An open industry-standard communication protocol and device profile specification (EN 50325-4).

CFC

(*continuous function chart*) A graphical programming language (an extension of the IEC 61131-3 standard) based on the function block diagram language that works like a flowchart. However, no networks are used and free positioning of graphic elements is possible, which allows feedback loops. For each block, the inputs are on the left and the outputs on the right. You can link the block outputs to the inputs of other blocks to create complex expressions.

configuration

The arrangement and interconnection of hardware components within a system and the hardware and software parameters that determine the operating characteristics of the system.

continuous function chart language

A graphical programming language (an extension of the IEC61131-3 standard) based on the function block diagram language that works like a flowchart. However, no networks are used and free positioning of graphic elements is possible, which allows feedback loops. For each block, the inputs are on the left and the outputs on the right. You can link the block outputs to inputs of other blocks to create complex expressions.

controller

Automates industrial processes (also known as programmable logic controller or programmable controller).

D

DIN

(*Deutsches Institut für Normung*) A German institution that sets engineering and dimensional standards.

E

EIA rack

(*electronic industries alliance rack*) A standardized (EIA 310-D, IEC 60297, and DIN 41494 SC48D) system for mounting various electronic modules in a stack or rack that is 19 inches (482.6 mm) wide.

EN

EN identifies one of many European standards maintained by CEN (*European Committee for Standardization*), CENELEC (*European Committee for Electrotechnical Standardization*), or ETSI (*European Telecommunications Standards Institute*).

F

FBD

(*function block diagram*) One of 5 languages for logic or control supported by the standard IEC 61131-3 for control systems. Function block diagram is a graphically oriented programming language. It works with a list of networks, where each network contains a graphical structure of boxes and connection lines, which represents either a logical or arithmetic expression, the call of a function block, a jump, or a return instruction.

FE

(functional Earth) A common grounding connection to enhance or otherwise allow normal operation of electrically sensitive equipment (also referred to as functional ground in North America).

In contrast to a protective Earth (protective ground), a functional earth connection serves a purpose other than shock protection, and may normally carry current. Examples of devices that use functional earth connections include surge suppressors and electromagnetic interference filters, certain antennas, and measurement instruments.

FreqGen

(*frequency generator*) A function that generates a square wave signal with programmable frequency.

H

HE10

Rectangular connector for electrical signals with frequencies below 3 MHz, complying with IEC 60807-2.

HSC

(*high-speed counter*) A function that counts pulses on the controller or on expansion module inputs.

I

I/O

(*input/output*)

IEC

(*international electrotechnical commission*) A non-profit and non-governmental international standards organization that prepares and publishes international standards for electrical, electronic, and related technologies.

IEC 61131-3

Part 3 of a 3-part IEC standard for industrial automation equipment. IEC 61131-3 is concerned with controller programming languages and defines 2 graphical and 2 textual programming language standards. The graphical programming languages are ladder diagram and function block diagram. The textual programming languages include structured text and instruction list.

IL

(*instruction list*) A program written in the language that is composed of a series of text-based instructions executed sequentially by the controller. Each instruction includes a line number, an instruction code, and an operand (refer to IEC 61131-3).

instruction list language

A program written in the instruction list language that is composed of a series of text-based instructions executed sequentially by the controller. Each instruction includes a line number, an instruction code, and an operand (see IEC 61131-3).

IP 20

(*ingress protection*) The protection classification according to IEC 60529 offered by an enclosure, shown by the letter IP and 2 digits. The first digit indicates 2 factors: helping protect persons and for equipment. The second digit indicates helping protect against water. IP 20 devices help protect against electric contact of objects larger than 12.5 mm, but not against water.

L

ladder diagram language

A graphical representation of the instructions of a controller program with symbols for contacts, coils, and blocks in a series of rungs executed sequentially by a controller (see IEC 61131-3).

LD

(*ladder diagram*) A graphical representation of the instructions of a controller program with symbols for contacts, coils, and blocks in a series of rungs executed sequentially by a controller (refer to IEC 61131-3).

M

master/slave

The single direction of control in a network that implements the master/slave mode.

Modbus

The protocol that allows communications between many devices connected to the same network.

N

NEMA

(*national electrical manufacturers association*) The standard for the performance of various classes of electrical enclosures. The NEMA standards cover corrosion resistance, ability to help protect from rain, submersion, and so on. For IEC member countries, the IEC 60529 standard classifies the ingress protection rating for enclosures.

P

PDO

(*process data object*) An unconfirmed broadcast message or sent from a producer device to a consumer device in a CAN-based network. The transmit PDO from the producer device has a specific identifier that corresponds to the receive PDO of the consumer devices.

PE

(*Protective Earth*) A common grounding connection to help avoid the hazard of electric shock by keeping any exposed conductive surface of a device at earth potential. To avoid possible voltage drop, no current is allowed to flow in this conductor (also referred to as *protective ground* in North America or as an equipment grounding conductor in the US national electrical code).

program

The component of an application that consists of compiled source code capable of being installed in the memory of a logic controller.

PTO

(*pulse train outputs*) A fast output that oscillates between off and on in a fixed 50-50 duty cycle, producing a square wave form. PTO is especially well suited for applications such as stepper motors, frequency converters, and servo motor control, among others.

PWM

(*pulse width modulation*) A fast output that oscillates between off and on in an adjustable duty cycle, producing a rectangular wave form (though you can adjust it to produce a square wave).

R

RJ45

A standard type of 8-pin connector for network cables defined for Ethernet.

RPDO

(*receive process data object* An unconfirmed broadcast message or sent from a producer device to a consumer device in a CAN-based network. The transmit PDO from the producer device has a specific identifier that corresponds to the receive PDO of the consumer devices.

RS-232

A standard type of serial communication bus, based on 3 wires (also known as EIA RS-232C or V.24).

RS-485

A standard type of serial communication bus, based on 2 wires (also known as EIA RS-485).

RxD

The line that receives data from one source to another.

S

SFC

(*sequential function chart*) A language that is composed of steps with associated actions, transitions with associated logic condition, and directed links between steps and transitions. (The SFC standard is defined in IEC 848. It is IEC 61131-3 compliant.)

ST

(*structured text*) A language that includes complex statements and nested instructions (such as iteration loops, conditional executions, or functions). ST is compliant with IEC 61131-3.

T

terminal block

(*terminal block*) The component that mounts in an electronic module and provides electrical connections between the controller and the field devices.

TPDO

(*transmit process data object*) An unconfirmed broadcast message or sent from a producer device to a consumer device in a CAN-based network. The transmit PDO from the producer device has a specific identifier that corresponds to the receive PDO of the consumer devices.

TxD

The line that sends data from one source to another.

Index

Symbols

Short-circuit or Over-current on Sink Transistor Outputs, *55*

A

accessories, *41*
analog input modules
  specifications, *32*
analog mixed I/O modules
  specifications, *34*
analog output modules
  specifications, *33*

C

CANopen communication, *222*
certifications and standards, *68*
communication
  CANopen, *222*
Communication Ports, *221*
  Ethernet Port, *226*
  Serial Line 1, *231*
  Serial Line 2, *234*
  USB Programming Port, *229*
connections
  to CANopen slaves, *222*
  to J1939 ECUs, *223*

D

digital I/O modules
  specifications, *28*, *29*, *31*, *37*, *38*
Digital I/O modules
  Specifications, *38*

E

ECUs, max. number of J1939, *223*
Electrical Requirements
  Installation, *83*
Electromagnetic Susceptibility, *66*
Environmental Characteristics, *65*

F

fallback
  configuring modes, *53*
features
  key features, *18*
Filter
  Bounce Filter, *49*

G

Grounding, *96*

I

inductive load, output protection
  output protection, inductive load, *87*
Input Management, *48*
Installation, *63*
  Electrical Requirements, *83*
  Logic Controller Installation, *69*
intended use, *8*

J

J1939
  capabilities, *223*

L

Latching, *50*
Logic Controller Installation
  Installation, *69*

M

M241
TM241C24R, *103*
TM241C24T, *121*
TM241C24U, *139*
TM241C40R, *157*
TM241C40T, *169*
TM241C40U, *181*
TM241CE24R, *109*
TM241CE24T, *127*
TM241CE24U, *145*
TM241CE40R, *163*
TM241CE40T, *175*
TM241CE40U, *187*
TM241CEC24R, *115*
TM241CEC24T, *133*
TM241CEC24U, *151*
mounting positions, *73*

N

notice
loss of application data, *59*

O

output management, *52*

P

PGNs, max. number of J1939, *223*
Power Supply, *90*, *94*
presentation
TM241C24R, *103*
TM241C24T, *121*
TM241C24U, *139*
TM241C40R, *157*
TM241C40T, *169*
TM241C40U, *181*
TM241CE24R, *109*
TM241CE24T, *127*
TM241CE24U, *145*
TM241CE40R, *163*
TM241CE40T, *175*
TM241CE40U, *187*
TM241CEC24R, *115*
TM241CEC24T, *133*
TM241CEC24U, *151*
programming languages
IL, LD, Grafcet, *18*

Q

qualification of personnel, *8*

R

real time clock, *44*
regular inputs, *28*, *29*, *31*
regular transistor outputs, *28*, *29*, *31*
relay outputs, *28*, *29*, *31*
Run/Stop, *57*

S

SD Card, *59*
Serial Line 1
Communication Ports, *231*
Serial Line 2
Communication Ports, *234*
short-circuit or over-current on relay outputs, *56*
short-circuit or over-current on transistor outputs, *53*

specifications
analog input modules, *32*
analog mixed I/O modules, *34*
analog output modules, *33*
digital I/O modules, *28*, *29*, *31*, *37*
Specifications
Digital I/O modules, *38*, *38*
specifications
modules, *34*
transmitter and receiver modules, *36*

T

Tesys modules
specifications, *34*
TM241CEC24R
M241, *115*
presentation, *115*
TM241CEC24T
M241, *133*
presentation, *133*
TMC4, *26*
transmitter and receiver modules
specifications, *36*

U

USB Programming Port
Communication Ports, *229*

W

wiring, *84*

Altivar Process ATV600

Variable Speed Drives

Programming Manual

01/2019

EAV64318.07

www.schneider-electric.com

The information provided in this documentation contains general descriptions and/or technical characteristics of the performance of the products contained herein. This documentation is not intended as a substitute for and is not to be used for determining suitability or reliability of these products for specific user applications. It is the duty of any such user or integrator to perform the appropriate and complete risk analysis, evaluation and testing of the products with respect to the relevant specific application or use thereof. Neither Schneider Electric nor any of its affiliates or subsidiaries shall be responsible or liable for misuse of the information contained herein. If you have any suggestions for improvements or amendments or have found errors in this publication, please notify us.

You agree not to reproduce, other than for your own personal, noncommercial use, all or part of this document on any medium whatsoever without permission of Schneider Electric, given in writing. You also agree not to establish any hypertext links to this document or its content. Schneider Electric does not grant any right or license for the personal and noncommercial use of the document or its content, except for a non-exclusive license to consult it on an "as is" basis, at your own risk. All other rights are reserved.

All pertinent state, regional, and local safety regulations must be observed when installing and using this product. For reasons of safety and to help ensure compliance with documented system data, only the manufacturer should perform repairs to components.

When devices are used for applications with technical safety requirements, the relevant instructions must be followed.

Failure to use Schneider Electric software or approved software with our hardware products may result in injury, harm, or improper operating results.

Failure to observe this information can result in injury or equipment damage.

© 2019 Schneider Electric. All rights reserved.

Table of Contents

Safety Information . . . 15
About the Book . . . 19
Part I Introduction . . . 23
Chapter 1 Setup . . . 25
Initial Steps . . . 26
Steps for Setting-Up the Drive . . . 28
Software Enhancements . . . 30
Chapter 2 Overview . . . 33
Factory Configuration . . . 34
Application Functions . . . 35
Basic Functions . . . 38
Graphic Display Terminal . . . 39
Structure of the Parameter Table . . . 43
Finding a Parameter in This Document . . . 44
Chapter 3 Cyber Security . . . 45
Cyber Security . . . 45
Part II Programming . . . 47
Chapter 4 [Simply start] SYS - . . . 49
[Simply start] SIM - Menu . . . 50
[My menu] MYMn - Menu . . . 55
[Modified parameters] LMd - Menu . . . 55
Chapter 5 [Dashboard] dSH - . . . 57
[Pump dashboard] PMt - Menu . . . 58
[Fan dashboard] FAn - Menu . . . 60
[Dashboard] dSH - Menu . . . 62
[Control] Ctr - Menu . . . 63
[Control] Ftr - Menu . . . 66
[Dashboard] dSH - Menu . . . 67
[kWh Counters] KWC - menu . . . 68
[Dashboard] dSH - Menu . . . 70
Chapter 6 [Diagnostics] diA - . . . 71
6.1 [Diag. data] . . . 72
[Diag. data] ddt - Menu . . . 73
[Service message] SEr - Menu . . . 78
[Other State] SSt - Menu . . . 79
[Diagnostics] dAu - Menu . . . 80
[Identification] oid - Menu . . . 80
6.2 [Error history] PFH - Menu . . . 81
[Error history] PFH - Menu . . . 81
6.3 [Warnings] ALr - Menu . . . 84
[Actual warnings] ALrd - Menu . . . 85
[Warning group 1 definition] A1C - Menu . . . 85
[Warning group 2 definition] A2C - Menu . . . 85
[Warning group 3 definition] A3C - Menu . . . 85
[Warning group 4 definition] A4C - Menu . . . 85
[Warning group 5 definition] A5C - Menu . . . 86
[Warnings] ALr - Menu . . . 86

Chapter 7 [Display] Mon - 87
7.1 [Energy parameters] 88
[Elec Ener Input Counter] EL i - Menu 89
[Elec Ener Output Counter] ELo - Menu 90
[Mechanical energy] MEC - Menu 92
[Energy saving] ESA - Menu 94
7.2 [Application parameters] 95
[Application parameters] APr - Menu 95
7.3 [Pump parameters] 99
[Variable speed pump] MPP - Menu 100
[Multipump system] MPS - Menu 103
[Installation] MPVS - Menu 108
7.4 [Motor parameters] 109
[Motor parameters] MMo - Menu 109
7.5 [Drive parameters] 111
[Drive parameters] MP i - Menu 111
7.6 [Thermal monitoring] 115
[Thermal Monitoring] tPM - Menu 115
7.7 [PID display] 116
[PID display] P iC - Menu 116
7.8 [Counter management] 117
[Counter Management] ELt - Menu 117
7.9 [Other state] 120
[Other state] SSt - Menu 120
7.10 [I/O map] 121
[Digital Input Map] L iA - Menu 122
[AI1] A i1C - Menu 122
[AI2] A i2C - Menu 124
[AI3] A i3C - Menu 125
[AI4] A i4C - Menu 126
[AI5] A i5C - Menu 127
[Digital output map] LoA - Menu 128
[AQ1] Ao 1C - Menu 128
[AQ2] Ao2C - Menu 132
[DI5 frequency measured] PFC5 - Menu 134
[DI6 frequency measured] PFC6 - Menu 136
[Cabinet Digital Input Map] L iCA - Menu 137
[Cabinet Digital Output Map] LoCA - Menu 137
7.11 [Communication map] 138
[Communication map] CMM - Menu 139
[Modbus network diag] Mnd - Menu 142
[Com. scanner input map] iSA - Menu 143
[Com scan output map] oSA - Menu 144
[Modbus HMI Diag] MdH - Menu 145
[Ethernet Emb Diag] MPE - Menu 146
[Ethernet Module Diag] MtE - Menu 147
[DeviceNet Diag] dVn - Menu 148
[Profibus Diag] Prb - Menu 149
[PROFINET Diag] Prn - Menu 150
[Powerlink Diag] PWL - Menu 152
[Command word image] CWi - Menu 152
[Freq. ref. word map] rWi - Menu 153
[CANopen map] CnM - Menu 154

[PDO1 image] Pdo 1 - Menu . . . 154
[PDO2 image] Pdo2 - Menu . . . 155
[PDO3 image] Pdo3 - Menu . . . 156
[CANopen map] CnM - Menu . . . 157
7.12 [Data logging] . . . 158
[Distributed logging] dLo - Menu . . . 159
[Log dstrb prm select] LdP - Menu . . . 160
[Distributed logging] dLo - Menu . . . 162
Chapter 8 [Complete settings] CSt - . . . 163
8.1 Overview . . . 165
Application Control Mode . . . 165
8.2 [Macro configuration] . . . 168
[Macro configuration] MCr - Menu . . . 168
8.3 [Motor parameters] MPA - Menu . . . 170
[Motor parameters] MPA - Menu . . . 171
[Data] Mtd - Menu . . . 174
[Motor tune] Mtu - Menu . . . 181
[Motor monitoring] MoP - Menu . . . 187
[Thermal monitoring] tPP - Menu . . . 188
[Motor monitoring] MoP - Menu . . . 195
[Motor control] drC - Menu . . . 197
[Spd Loop Optimization] MCL - Menu . . . 202
[Switching frequency] SWF - Menu . . . 209
8.4 [Define system units] . . . 211
[Define system units] SuC - Menu . . . 211
8.5 [Sensors assignment] . . . 215
[Sensors assignment] SSC - Menu . . . 216
[AI1 sensor config.] Menu . . . 218
[AI2 sensor config.] Menu . . . 221
[AI3 sensor config.] Menu . . . 223
[AI4 sensor config.] Menu . . . 225
[AI5 sensor config.] Menu . . . 227
[PI5 Sensor Config] Menu . . . 229
[PI6 Sensor Config] Menu . . . 230
[AIV1 configuration] Menu . . . 232
[AIV2 configuration] Menu . . . 234
[AIV3 configuration] Menu . . . 236
8.6 [Command and Reference] CrP - Menu . . . 238
[Command and Reference] CrP - Menu . . . 238
8.7 [Pump functions] - [Booster control] . . . 252
[System Architecture] MPS - Menu . . . 253
[MultiDrive Config] MPVC - Menu . . . 264
[Pumps configuration] PuMP - Menu . . . 267
[System Architecture] MPS - Menu . . . 270
[Booster control] bSC - Menu . . . 271
[Stage/Destage condition] SdCM - Menu . . . 274
[Stage/Destage method] SdMM - Menu . . . 278
[Booster control] bSC - Menu . . . 281
8.8 [Pump functions] - [Level control] . . . 282
[System architecture] MPS - Menu . . . 283
[Pumps configuration] PuMP - Menu . . . 283
[Level control] Lcc - Menu . . . 284
[Level control] Lcc - Menu . . . 292
[Level settings] LcL - Menu . . . 298

8.9 [Pump functions] - [PID controller] . . . 303
[PID controller] PId - Overview . . . 304
[PID Feedback] FdbA - Menu . . . 308
[PID Reference] rFC - Menu . . . 315
[PID preset references] PrI - Menu . . . 317
[PID Reference] rFC - Menu . . . 319
[Settings] SEt - Menu . . . 320
8.10 [Pump functions] - [Sleep/wakeup] . . . 323
[Sleep/Wakeup] SPW - Overview . . . 324
[Sleep menu] SLP - Menu . . . 327
[Sleep menu] SLP - Menu . . . 329
[Sleep menu] SLP - Menu . . . 330
[Boost] SbE - Menu . . . 331
[Advanced sleep check] AdS - Menu . . . 332
[Wake up menu] WKP - Menu . . . 334
[Wake up menu] WKP - Menu . . . 335
8.11 [Pump functions] - [Feedback monitoring] . . . 336
[Feedback monitoring] FKM - Menu . . . 336
8.12 [Pump functions] - [Pump characteristics] . . . 338
[Pump characteristics] PCr - Menu . . . 338
8.13 [Pump functions] - [Sensorless flow estimation] . . . 345
[Flow estimation] SFE - Menu . . . 345
8.14 [Pump functions] - [dP/Head Correction] . . . 348
[dP/Head Correction] dPHC - Menu . . . 348
8.15 [Pump functions] - [Pump start stop] . . . 350
[Pump start stop] PSE - Menu . . . 350
8.16 [Pump functions] - [Pipe fill] . . . 354
[Pipe fill] PFI - Menu . . . 355
[Pipe fill] PFI - Menu . . . 357
8.17 [Pump functions] - [Friction loss compensation] . . . 359
[Friction loss comp] FLC - Menu . . . 360
[Friction loss comp] FLC - Menu . . . 362
8.18 [Pump functions] - [Jockey pump] . . . 363
[Jockey pump] JKP - Menu . . . 363
8.19 [Pump functions] - [Priming pump ctrl] . . . 366
[Priming pump ctrl] PPC - Menu . . . 367
[Priming pump ctrl] PPC - Menu . . . 369
8.20 [Pump functions] - [Flow limitation] . . . 370
[Flow limitation] FLM - Menu . . . 371
[Flow limitation] FLM - Menu . . . 372
8.21 [Pump monitoring] - [Pumpcycle monitoring] . . . 373
[Pumpcycle monitoring] CSP - Menu . . . 373
8.22 [Pump monitoring] - [Anti jam] . . . 375
[Anti-jam monit] JAM - Menu . . . 375
8.23 [Pump monitoring] - [Dry run Monit] . . . 381
[Dry run Monit] dYr - Menu . . . 381
8.24 [Pump monitoring] - [Pump low flow Monit] . . . 384
[Pump low flow Monit] PLF - Menu . . . 385
[Pump low flow Monit] PLF - Menu . . . 387
8.25 [Pump monitoring] - [Thermal monitoring] . . . 390
[Thermal monitoring] tPP - Menu . . . 390
8.26 [Pump monitoring] - [Inlet pressure monitoring] . . . 391
[Inlet pressure monitoring] IPP - Menu . . . 392
[Inlet pressure monitoring] IPP - Menu . . . 394

8.27 [Pump monitoring] - [Outlet pressure monitoring] 396
[Outlet pressure monitoring] oPP - Menu 397
[Outlet pressure monitoring] oPP - Menu 399
8.28 [Pump monitoring] - [High flow monitoring] 400
[High flow monitoring] HFP - Menu 401
[High flow monitoring] HFP - Menu 403
8.29 [Fan] - [PID controller] 404
[PID Controller] P id - Menu 404
8.30 [Fan] - [Feedback monitoring] 405
[Feedback monitoring] FKM - Menu 405
8.31 [Fan] - [Jump frequency] 406
[Jump frequency] JuF - Menu 406
8.32 [Fan] 407
[Fan] CSFA - Menu 407
8.33 [Generic functions] - [Speed limits] 410
[Speed limits] SLM - Menu 410
8.34 [Generic functions] - [Ramp] 413
[Ramp] rAMP - Menu 413
8.35 [Generic functions] - [Ramp switching] 416
[Ramp switching] rPt - Menu 416
8.36 [Generic functions] - [Stop configuration] 418
[Stop configuration] Stt - Menu 418
8.37 [Generic functions] - [Auto DC injection] 423
[Auto DC injection] AdC - Menu 423
8.38 [Generic functions] - [Ref. operations] 426
[Ref. operations] oA i - Menu 426
8.39 [Generic functions] - [Preset speeds] 428
[Preset speeds] PSS - Menu 428
8.40 [Generic functions] - [+/- speed] 432
[+/- speed] uPd - Menu 432
8.41 [Generic functions] - [Jump frequency] 435
[Jump frequency] JuF - Menu 435
8.42 [Generic functions] - [PID controller] 436
[PID Controller] P id - Menu 436
8.43 [Generic functions] - [Feedback mon.] 437
[Feedback monitoring] FKM - Menu 437
8.44 [Generic functions] - [Threshold reached] 438
[Threshold reached] tHrE - Menu 438
8.45 [Generic functions] - [Mains contactor command] 440
[Mains contactor command] LLC - Menu 440
8.46 [Generic functions] - [Output contactor cmd] 443
[Output contactor cmd] oCC - Menu 443
8.47 [Generic functions] - [Reverse disable] 446
[Reverse disable] rE in - Menu 446
8.48 [Generic functions] - [Torque limitation] 447
[Torque limitation] toL - Menu 447
8.49 [Generic functions] - [Parameters switching] 449
[Parameters switching] MLP - Menu 450
[Set 1] PS 1 - Menu 456
[Set 2] PS2 - Menu 456
[Set 3] PS3 - Menu 456
8.50 [Generic functions] - [Stop after speed timeout] 457
[Stop after speed timeout] PrSP - Menu 457
8.51 [Generic functions] - [Active Front End] 459
[Active Front End] AFE - Menu 459

8.52 [Generic monitoring] 460
[Process underload] uLd - Menu 461
[Process overload] oLd - Menu 463
[Stall monitoring] StPr - Menu 465
[Thermal monitoring] tPP - Menu 466
8.53 [Input/Output] - [I/O assignment] 467
[DI1 assignment] L1A - Menu 468
[DI2 assignment] L2A - Menu 468
[DI3 assignment] L3A - Menu 468
[DI4 assignment] L4A - Menu 469
[DI5 assignment] L5A - Menu 469
[DI6 assignment] L6A - Menu 469
[DI11 assignment] L11A - Menu 470
[DI12 assignment] L12A - Menu 470
[DI13 assignment] L13A - Menu 470
[DI14 assignment] L14A - Menu 471
[DI15 assignment] L15A - Menu 471
[DI16 assignment] L16A - Menu 471
[DI5 Pulse Input Assign] P15A - Menu 472
[DI6 Pulse Input Assign] P16A - Menu 472
[AI1 assignment] AI1A - Menu 472
[AI2 assignment] AI2A - Menu 472
[AI3 assignment] AI3A - Menu 473
[AI4 assignment] AI4A - Menu 473
[AI5 assignment] AI5A - Menu 473
[AIV1 assignment] AV1A - Menu 474
[AIV2 assignment] AV2A - Menu 474
[AIV3 assignment] AV3A - Menu 474
[DI50 Assignment] dS0A - Menu 475
[DI51 Assignment] dS1A - Menu 475
[DI52 Assignment] dS2A - Menu 476
[DI53 Assignment] dS3A - Menu 477
[DI54 Assignment] dS4A - Menu 477
[DI55 Assignment] dS5A - Menu 477
[DI56 Assignment] dS6A - Menu 478
[DI57 Assignment] dS7A - Menu 478
[DI58 Assignment] dS8A - Menu 478
[DI59 Assignment] dS9A - Menu 479
8.54 [Input/Output] - [DI/DQ] 480
[DI1 Configuration] di1 - Menu 481
[DI2 Configuration] di2 - Menu 481
[DI3 Configuration] di3 - Menu 482
[DI4 Configuration] di4 - Menu 482
[DI5 Configuration] di5 - Menu 483
[DI6 Configuration] di6 - Menu 483
[DI11 Configuration] di11 - Menu 483
[DI12 Configuration] di12 - Menu 484
[DI13 Configuration] di13 - Menu 484
[DI14 Configuration] di14 - Menu 484
[DI15 Configuration] di15 - Menu 485
[DI16 Configuration] di16 - Menu 485
[DI5 Pulse Config] PAi5 - Menu 486
[DI6 Pulse Config] PAi6 - Menu 487
[DQ11 Configuration] do11 - Menu 488
[DQ12 Configuration] do12 - Menu 490

[DI50 Configuration] d i 5 0 - Menu . . . 491
[DI51 Configuration] d i 5 1 - Menu . . . 491
[DI52 Configuration] d i 5 2 - Menu . . . 492
[DI53 Configuration] d i 5 3 - Menu . . . 494
[DI54 Configuration] d i 5 4 - Menu . . . 494
[DI55 Configuration] d i 5 5 - Menu . . . 495
[DI56 Configuration] d i 5 6 - Menu . . . 495
[DI57 Configuration] d i 5 7 - Menu . . . 496
[DI58 Configuration] d i 5 8 - Menu . . . 496
[DI59 Configuration] d i 5 9 - Menu . . . 497
8.55 [Input/Output] - [Analog I/O] . . . 498
[AI1 configuration] A i 1 - Menu . . . 499
[AI2 configuration] A i 2 - Menu . . . 502
[AI3 configuration] A i 3 - Menu . . . 504
[AI4 configuration] A i 4 - Menu . . . 505
[AI5 configuration] A i 5 - Menu . . . 507
[AQ1 configuration] A o 1 - Menu . . . 509
[AQ2 configuration] A o 2 - Menu . . . 513
[Virtual AI1] A V 1 - Menu . . . 515
[Virtual AI2] A u 2 - Menu . . . 516
[Virtual AI3] A u 3 - Menu . . . 516
8.56 [Input/Output] - [Relay] . . . 517
[R1 configuration] r 1 - Menu . . . 518
[R2 configuration] r 2 - Menu . . . 520
[R3 configuration] r 3 - Menu . . . 521
[R4 configuration] r 4 - Menu . . . 521
[R5 configuration] r 5 - Menu . . . 522
[R6 configuration] r 6 - Menu . . . 522
[R60 configuration] r 6 0 - Menu . . . 523
[R61 configuration] r 6 1 - Menu . . . 523
[R62 configuration] r 6 2 - Menu . . . 524
[R63 configuration] r 6 3 - Menu . . . 524
[R64 configuration] r 6 4 - Menu . . . 525
[R65 configuration] r 6 5 - Menu . . . 525
[R66 configuration] r 6 6 - Menu . . . 526
[Input/Output] i o - Menu . . . 527
8.57 [Error/Warning handling] . . . 529
[Auto fault reset] A t r - Menu . . . 530
[Fault reset] r S t - Menu . . . 531
[Catch on the fly] F L r - Menu . . . 533
[Error detection disable] i n H - Menu . . . 535
[External error] E t F - Menu . . . 538
[Output phase loss] o P L - Menu . . . 540
[Input phase loss] i P L - Menu . . . 541
[4-20mA loss] L F L - Menu . . . 542
[Fallback speed] L F F - Menu . . . 544
[Fieldbus monitoring] C L L - Menu . . . 545
[Embedded Modbus TCP] E M t C - Menu . . . 546
[Communication module] C o M o - Menu . . . 547
[Undervoltage handling] u S b - Menu . . . 549
[Ground Fault] G r F L - Menu . . . 551
[Motor thermal monit] t H t - Menu . . . 552
[Drive overload monit] o b r - Menu . . . 554
[Warn grp 1 definition] A 1 C - Menu . . . 555

[Warn grp 2 definition] A2C - Menu . . . 558
[Warn grp 3 definition] A3C - Menu . . . 558
[Warn grp 4 definition] A4C - Menu . . . 558
[Warn grp 5 definition] A5C - Menu . . . 558
8.58 [Maintenance] . . . 559
[Diagnostics] dAu - Menu . . . 560
[Drive warranty mgnt] dWnA - Menu . . . 561
[Customer event 1] CE 1 - Menu . . . 562
[Customer event 2] CE2 - Menu . . . 563
[Customer event 3] CE3 - Menu . . . 563
[Customer event 4] CE4 - Menu . . . 564
[Customer event 5] CE5 - Menu . . . 564
[Customer events] CuEv - Menu . . . 565
[Fan management] FAnA - Menu . . . 566
[Maintenance] C5nA - Menu . . . 567
8.59 [Cabinet I/O Function] CAbF - . . . 568
[Monitoring circuit A] CnCA - Menu . . . 569
[Monitoring circuit B] CnCb - Menu . . . 571
[Monitoring circuit C] CnCC - Menu . . . 571
[Monitoring circuit D] CnCd - Menu . . . 572
[Cabinet circuit A] CCnA - Menu . . . 573
[Cabinet circuit B] CCnb - Menu . . . 573
[Cabinet circuit C] CCnC - Menu . . . 574
[Motor winding A] Ct iA - Menu . . . 575
[Motor winding B] Ct ib - Menu . . . 575
[Motor bearing A] Ct iC - Menu . . . 576
[Motor bearing B] Ct id - Menu . . . 576
[Circuit breaker] CCb - Menu . . . 577
[Cabinet I/O functions] CAbF - menu . . . 578
Chapter 9 [Communication] Con - . . . 579
[Modbus Fieldbus] Nd 1 - Menu . . . 580
[Com. scanner input] iC5 - Menu . . . 582
[Com. scanner output] oC5 - Menu . . . 583
[Modbus HMI] Nd2 - Menu . . . 584
[Embd Eth Config] EtE - Menu . . . 585
[Fast Device Replacement] Fdr - Menu . . . 586
[Eth Module Config] Eto - Menu . . . 588
[CANopen] Cno - Menu . . . 588
[DeviceNet] dnC - Menu . . . 588
[BACnet MS/TP] bACn - Menu . . . 588
[Profibus] PbC - Menu . . . 588
[Profinet] PnC - Menu . . . 588
[Powerlink] EPL - Menu . . . 589
Chapter 10 [File management] Fnt - . . . 591
[Transfer config file] tCF - Menu . . . 592
[Factory settings] FCS - Menu . . . 592
[Parameter group list] Fry - Menu . . . 593
[Factory settings] FCS - Menu . . . 594
[Pre-settings] PrES - Menu . . . 595
[Firmware update diag] FWud - Menu . . . 596
[Identification] oid - Menu . . . 598
[Package version] PFV - Menu . . . 598
[Firmware update] FWuP - Menu . . . 599

Chapter 11 [My preferences] MYP - 601
11.1 [Language] 602
[Language] LnG - Menu 602
11.2 [Password] 603
[Password] Cod - Menu 603
11.3 [Parameter access] 605
[Restricted channels] PCd - Menu 606
[Restricted param] PPA - Menu 606
[Visibility] Vis - Menu 607
11.4 [Customization] 608
[My menu config.] MYC - Menu 609
[Display screen type] MSC - Menu 609
[Param. Bar Select] PbS - Menu 609
[Customer parameters] CYP - Menu 610
[Service message] SEr - Menu 610
11.5 [Date & Time settings] 611
[Date/time settings] rtC - Menu 611
11.6 [Access level] 612
[Access level] LAC - Menu 612
11.7 [Webserver] 613
[Webserver] WbS - Menu 613
11.8 [Functions key mgnt] 614
[Functions key mgnt] FKG - Menu 614
11.9 [LCD settings] 615
[LCD settings] CnL - Menu 615
11.10 [Stop and go] 616
[Stop and go] StG - Menu 616
11.11 [QR code] 618
[QR code] qrC - Menu 618
11.12 [QR code] - [My link 1] 619
[My link 1] MYL 1 - Menu 619
11.13 [QR code] - [My link 2] 620
[My link 2] MYL 2 - Menu 620
11.14 [QR code] - [My link 3] 621
[My link 3] MYL 3 - Menu 621
11.15 [QR code] - [My link 4] 622
[My link 4] MYL 4 - Menu 622
11.16 [Pairing password] 623
[Pairing password] PPI 623
Part III Maintenance and diagnostics 625
Chapter 12 Maintenance 627
Maintenance 627
Chapter 13 Diagnostics and Troubleshooting 629
13.1 Warning Codes 630
Warning Codes 630
13.2 Error Codes 633
Overview 636
[AFE Modulation Rate Error] ACF 1 637
[AFE Current Control Error] ACF 2 637
[Angle error] ASF 638
[Circuit Breaker Error] CbF 638
[CabinetCircuit A Error] CFA 639
[CabinetCircuit B Error] CFb 639
[CabinetCircuit C Error] CFC 640
[Incorrect Configuration] CFF 640

[Invalid Configuration] CF 1 641
[Conf Transfer Error] CF 12 641
[Pre-settings Transfer Error] CF 13 642
[Cabinet Overheat Error] CHF 642
[Fieldbus Com Interrupt] CnF 643
[CANopen Com Interrupt] CoF 643
[Precharge Capacitor] CrF 644
[AFE contactor fdbk error] CrF3 644
[Channel Switch Error] CSF 645
[Dry Run Error] drYF 645
[EEPROM Control] EEF 1 646
[EEPROM Power] EEF2 646
[External Error] EPF 1 647
[Fieldbus Error] EPF2 647
[Embd Eth Com Interrupt] EtHF 648
[Out Contact Closed Error] FCF 1 648
[Out Contact Opened Error] FCF2 649
[FDR 1 Error] Fdr 1 649
[FDR 2 Error] Fdr2 650
[Firmware Update Error] FWEr 650
[Boards Compatibility] HCF 651
[High Flow Error] HFPF 651
[Egy Saving Exit Error] idLF 652
[MonitorCircuit A Error] iFA 652
[MonitorCircuit B Error] iFb 653
[MonitorCircuit C Error] iFC 653
[MonitorCircuit D Error] iFd 654
[Input Overheating] iHF 654
[Internal Link Error] iLF 655
[Internal Error 0] inF0 655
[Internal Error 1] inF 1 656
[Internal Error 2] inF2 656
[Internal Error 3] inF3 657
[Internal Error 4] inF4 657
[Internal Error 6] inF6 658
[Internal Error 7] inF7 658
[Internal Error 8] inF8 659
[Internal Error 9] inF9 659
[Internal Error 10] inFA 660
[Internal Error 11] inFb 660
[Internal Error 12] inFC 661
[Internal Error 13] inFd 661
[Internal Error 14] inFE 662
[Internal Error 15] inFF 662
[Internal Error 16] inFG 663
[Internal Error 17] inFH 663
[Internal Error 18] inF 1 664
[Internal Error 20] inFK 664
[Internal Error 21] inFL 665
[Internal Error 22] inFn 665
[Internal Error 23] inFn 666
[Internal Error 25] inFP 666
[Internal Error 27] inFr 667
[Internal Error 28] inFS 667
[Internal Error 29] inFt 668

[Internal Error 30] inFu 668
[Internal Error 31] inFV 669
[Inlet Pressure Error] iPPF 669
[Anti Jam Error] JAMF 670
[Input Contactor] LCF 670
[High Level Error] LCHF 671
[Low Level Error] LCLF 671
[AI1 4-20mA loss] LFF1 672
[AI2 4-20mA loss] LFF2 672
[AI3 4-20mA loss] LFF3 673
[AI4 4-20mA loss] LFF4 673
[AI5 4-20mA loss] LFF5 674
[MultiDrive Link Error] MdLF 674
[Mains Freq Out Of Range] MFF 675
[M/P Device Error] MPdF 675
[Lead Pump Error] MPLF 676
[DC Bus Overvoltage] obF 676
[AFE Bus unbalancing] obF2 677
[Overcurrent] oCF 677
[Drive Overheating] oHF 678
[Process Overload] oLC 678
[Motor Overload] oLF 679
[Single Output Phase Loss] oPF1 679
[Output Phase Loss] oPF2 680
[Out Pressure High] oPHF 680
[Out Pressure Low] oPLF 681
[Supply Mains Overvoltage] oSF 681
[Cab I/O 24V Error] P24C 682
[PumpCycle Start Error] PCPF 682
[PID Feedback Error] PFMF 683
[Program Loading Error] PGLF 683
[Program Running Error] PGrF 684
[Input phase loss] PHF 684
[Pump Low Flow Error] PLFF 685
[Safety Function Error] SAFF 685
[Motor short circuit] SCF1 686
[Ground Short Circuit] SCF3 686
[IGBT Short Circuit] SCF4 687
[Motor Short Circuit] SCF5 687
[AFE ShortCircuit error] SCF6 688
[Modbus Com Interruption] SLF1 688
[PC Com Interruption] SLF2 689
[HMI Com Interruption] SLF3 689
[Motor Overspeed] SoF 690
[Motor Stall Error] StF 690
[AI2 Thermal Sensor Error] t2CF 691
[AI3 Thermal Sensor Error] t3CF 691
[AI4 Thermal Sensor Error] t4CF 692
[AI5 Thermal Sensor Error] t5CF 692
[MotorWinding A Error] tFA 693
[MotorWinding B Error] tFb 693
[MotorBearing A Error] tFC 694
[MotorBearing B Error] tFd 694
[AI2 Th Level Error] tH2F 695
[AI3 Th Level Error] tH3F 695

[AI4 Th Level Error] tHAF . . . 696
[AI5 Th Level Error] tHSF . . . 696
[IGBT Overheating] tJF . . . 697
[AFE IGBT over-heat error] tJF2 . . . 697
[Autotuning Error] tnF . . . 698
[Process Underload] uLF . . . 698
[AFE Mains Undervoltage] urF . . . 699
[Supply Mains UnderV] uSF . . . 699
13.3 FAQ . . . 700
FAQ . . . 700
Glossary . . . 701

Safety Information

Important Information

NOTICE

Read these instructions carefully, and look at the equipment to become familiar with the device before trying to install, operate, service, or maintain it. The following special messages may appear throughout this documentation or on the equipment to warn of potential hazards or to call attention to information that clarifies or simplifies a procedure.

The addition of this symbol to a “Danger” or “Warning” safety label indicates that an electrical hazard exists which will result in personal injury if the instructions are not followed.

This is the safety alert symbol. It is used to alert you to potential personal injury hazards. Obey all safety messages that follow this symbol to avoid possible injury or death.

⚠ DANGER

DANGER indicates a hazardous situation which, if not avoided, **will result in** death or serious injury.

⚠ WARNING

WARNING indicates a hazardous situation which, if not avoided, **could result in** death or serious injury.

⚠ CAUTION

CAUTION indicates a hazardous situation which, if not avoided, **could result** in minor or moderate injury.

NOTICE

NOTICE is used to address practices not related to physical injury.

PLEASE NOTE

Electrical equipment should be installed, operated, serviced, and maintained only by qualified personnel. No responsibility is assumed by Schneider Electric for any consequences arising out of the use of this material.

A qualified person is one who has skills and knowledge related to the construction and operation of electrical equipment and its installation, and has received safety training to recognize and avoid the hazards involved.

Qualification Of Personnel

Only appropriately trained persons who are familiar with and understand the contents of this manual and all other pertinent product documentation are authorized to work on and with this product. In addition, these persons must have received safety training to recognize and avoid hazards involved. These persons must have sufficient technical training, knowledge and experience and be able to foresee and detect potential hazards that may be caused by using the product, by changing the settings and by the mechanical, electrical and electronic equipment of the entire system in which the product is used. All persons working on and with the product must be fully familiar with all applicable standards, directives, and accident prevention regulations when performing such work.

Intended Use

This product is a drive for three-phase synchronous, asynchronous motors and intended for industrial use according to this manual. The product may only be used in compliance with all applicable safety standard and local regulations and directives, the specified requirements and the technical data. The product must be installed outside the hazardous ATEX zone. Prior to using the product, you must perform a risk assessment in view of the planned application. Based on the results, the appropriate safety measures must be implemented. Since the product is used as a component in an entire system, you must ensure the safety of persons by means of the design of this entire system (for example, machine design). Any use other than the use explicitly permitted is prohibited and can result in hazards.

Product Related Information

Read and understand these instructions before performing any procedure with this drive.

⚠⚠ DANGER

HAZARD OF ELECTRIC SHOCK, EXPLOSION OR ARC FLASH

- Only appropriately trained persons who are familiar with and understand the contents of this manual and all other pertinent product documentation and who have received safety training to recognize and avoid hazards involved are authorized to work on and with this drive system. Installation, adjustment, repair and maintenance must be performed by qualified personnel.
- The system integrator is responsible for compliance with all local and national electrical code requirements as well as all other applicable regulations with respect to grounding of all equipment.
- Many components of the product, including the printed circuit boards, operate with mains voltage.
- Only use properly rated, electrically insulated tools and measuring equipment.
- Do not touch unshielded components or terminals with voltage present.
- Motors can generate voltage when the shaft is rotated. Prior to performing any type of work on the drive system, block the motor shaft to prevent rotation.
- AC voltage can couple voltage to unused conductors in the motor cable. Insulate both ends of unused conductors of the motor cable.
- Do not short across the DC bus terminals or the DC bus capacitors or the braking resistor terminals.
- Before performing work on the drive system:
  - Disconnect all power, including external control power that may be present. Take into account that the circuit breaker or main switch does not de-energize all circuits.
  - Place a **Do Not Turn On** label on all power switches related to the drive system.
  - Lock all power switches in the open position.
  - Wait 15 minutes to allow the DC bus capacitors to discharge.
  - Follow the instructions given in the chapter "Verifying the Absence of Voltage" in the installation manual of the product.
- Before applying voltage to the drive system:
  - Verify that the work has been completed and that the entire installation cannot cause hazards.
  - If the mains input terminals and the motor output terminals have been grounded and short-circuited, remove the ground and the short circuits on the mains input terminals and the motor output terminals.
  - Verify proper grounding of all equipment.
  - Verify that all protective equipment such as covers, doors, grids is installed and/or closed.

Failure to follow these instructions will result in death or serious injury.

Drive systems may perform unexpected movements because of incorrect wiring, incorrect settings, incorrect data or other errors.

⚠ WARNING

UNANTICIPATED EQUIPMENT OPERATION

- Carefully install the wiring in accordance with the EMC requirements.
- Do not operate the product with unknown or unsuitable settings or data.
- Perform a comprehensive commissioning test.

Failure to follow these instructions can result in death, serious injury, or equipment damage.

Damaged products or accessories may cause electric shock or unanticipated equipment operation.

⚠⚠ DANGER

ELECTRIC SHOCK OR UNANTICIPATED EQUIPMENT OPERATION

Do not use damaged products or accessories.

Failure to follow these instructions will result in death or serious injury.

Contact your local Schneider Electric sales office if you detect any damage whatsoever.

⚠ WARNING

LOSS OF CONTROL

- The designer of any control scheme must consider the potential failure modes of control paths and, for critical control functions, provide a means to achieve a safe state during and after a path failure. Examples of critical control functions are emergency stop, overtravel stop, power outage and restart.
- Separate or redundant control paths must be provided for critical control functions.
- System control paths may include communication links. Consideration must be given to the implications of unanticipated transmission delays or failures of the link.
- Observe all accident prevention regulations and local safety guidelines (1).
- Each implementation of the product must be individually and thoroughly tested for proper operation before being placed into service.

Failure to follow these instructions can result in death, serious injury, or equipment damage.

(1) For USA: Additional information, refer to NEMA ICS 1.1 (latest edition), Safety Guidelines for the Application, Installation, and Maintenance of Solid State Control and to NEMA ICS 7.1 (latest edition), Safety Standards for Construction and Guide for Selection, Installation and Operation of Adjustable-Speed Drive Systems.

NOTICE

DESTRUCTION DUE TO INCORRECT MAINS VOLTAGE

Before switching on and configuring the product, verify that it is approved for the mains voltage.

Failure to follow these instructions can result in equipment damage.

The temperature of the products described in this manual may exceed 80 °C (176 °F) during operation.

⚠ WARNING

HOT SURFACES

- Ensure that any contact with hot surfaces is avoided.
- Do not allow flammable or heat-sensitive parts in the immediate vicinity of hot surfaces.
- Verify that the product has sufficiently cooled down before handling it.
- Verify that the heat dissipation is sufficient by performing a test run under maximum load conditions.

Failure to follow these instructions can result in death, serious injury, or equipment damage.

This equipment has been designed to operate outside of any hazardous location. Only install this equipment in zones known to be free of a hazardous atmosphere.

⚠ DANGER

POTENTIAL FOR EXPLOSION

Install and use this equipment in non-hazardous locations only.

Failure to follow these instructions will result in death or serious injury.

Machines, controllers, and related equipment are usually integrated into networks. Unauthorized persons and malware may gain access to the machine as well as to other devices on the network/fieldbus of the machine and connected networks via insufficiently secure access to software and networks.

⚠ WARNING

UNAUTHORIZED ACCESS TO THE MACHINE VIA SOFTWARE AND NETWORKS

- In your hazard and risk analysis, consider all hazards that result from access to and operation on the network/fieldbus and develop an appropriate cyber security concept.
- Verify that the hardware infrastructure and the software infrastructure into which the machine is integrated as well as all organizational measures and rules covering access to this infrastructure consider the results of the hazard and risk analysis and are implemented according to best practices and standards covering IT security and cyber security (such as: ISO/IEC 27000 series, Common Criteria for Information Technology Security Evaluation, ISO/ IEC 15408, IEC 62351, ISA/IEC 62443, NIST Cybersecurity Framework, Information Security Forum - Standard of Good Practice for Information Security).
- Verify the effectiveness of your IT security and cyber security systems using appropriate, proven methods.

Failure to follow these instructions can result in death, serious injury, or equipment damage.

⚠ WARNING

LOSS OF CONTROL

Perform a comprehensive commissioning test to verify that communication monitoring properly detects communication interruptions

Failure to follow these instructions can result in death, serious injury, or equipment damage.

About the Book

At a Glance

Document Scope

The purpose of this document is to:
- help you to set up the drive,
- show you how to program the drive,
- show you the different menus, modes, and parameters,
- help you in maintenance and diagnostics.

Validity Note

Original instructions and information given in this manual have been written in English (before optional translation).

This documentation is valid for the Altivar Process ATV600 drives.

The technical characteristics of the devices described in the present document also appear online. To access the information online:

Step	Action
1	Go to the Schneider Electric home page *www.schneider-electric.com*.
2	In the **Search** box type the reference of a product or the name of a product range. ● Do not include blank spaces in the reference or product range. ● To get information on grouping similar modules, use asterisks (*).
3	If you entered a reference, go to the **Product Datasheets** search results and click on the reference that interests you. If you entered the name of a product range, go to the **Product Ranges** search results and click on the product range that interests you.
4	If more than one reference appears in the **Products** search results, click on the reference that interests you.
5	Depending on the size of your screen, you may need to scroll down to see the datasheet.
6	To save or print a datasheet as a .pdf file, click **Download XXX product datasheet**.

The characteristics that are presented in the present document should be the same as those characteristics that appear online. In line with our policy of constant improvement, we may revise content over time to improve clarity and accuracy. If you see a difference between the document and online information, use the online information as your reference.

Related Documents

Use your tablet or your PC to quickly access detailed and comprehensive information on all our products on www.schneider-electric.com.

The internet site provides the information you need for products and solutions:
- The whole catalog for detailed characteristics and selection guides,
- The CAD files to help design your installation, available in over 20 different file formats,
- All software and firmware to maintain your installation up to date,
- A large quantity of White Papers, Environment documents, Application solutions, Specifications... to gain a better understanding of our electrical systems and equipment or automation,

- And finally all the User Guides related to your drive, listed below:

Title of Documentation	Catalog Number
Catalog: Altivar Process ATV600 variable speed drives	*DIA2ED2140502EN* (English), *DIA2ED2140502FR* (French)
ATV600 Getting Started	*EAV63253* (English), *EAV63254* (French), *EAV63255* (German), *EAV63256* (Spanish), *EAV63257* (Italian), *EAV64298* (Chinese), *EAV63253PT* (Portuguese), *EAV63253TR* (Turkish)
ATV600 Getting Started Annex (SCCR)	*EAV64300* (English)
ATV630, ATV650 Installation Manual	*EAV64301* (English), *EAV64302* (French), *EAV64306* (German), *EAV64307* (Spanish), *EAV64310* (Italian), *EAV64317* (Chinese), *EAV64301PT* (Portuguese), *EAV64301TR* (Turkish)
ATV600 Programming Manual	*EAV64318* (English), *EAV64320* (French), *EAV64321* (German), *EAV64322* (Spanish), *EAV64323* (Italian), *EAV64324* (Chinese), *EAV64318PT* (Portuguese), *EAV64318TR* (Turkish)
ATV600 Modbus Serial Link Manual (Embedded)	*EAV64325* (English)
ATV600 Ethernet Manual (Embedded)	*EAV64327* (English)
ATV600 Ethernet IP - Modbus TCP Manual (VW3A3720, 721)	*EAV64328* (English)
ATV600 BACnet MS/TP Manual (VW3A3725)	*QGH66984* (English)
ATV600 PROFIBUS DP manual (VW3A3607)	*EAV64329* (English)
ATV600 DeviceNet manual (VW3A3609)	*EAV64330* (English)
ATV600 PROFINET manual (VW3A3627)	*EAV64331* (English)
ATV600 CANopen Manual (VW3A3608, 618, 628)	*EAV64333* (English)
ATV600 POWERLINK manual (VW3A3619)	*PHA99690* (English)
ATV600 Communication Parameters	*EAV64332* (English)
ATV600 Embedded Safety Function manual	*EAV64334* (English)
Altivar Process Drive Systems Installation manual (ATV660, ATV680, ATV960, ATV980)	*NHA37119* (English), *NHA37121* (French), *NHA37118* (German), *NHA37122* (Spanish), *NHA37123* (Italian), *NHA37130* (Chinese), *NHA37124* (Dutch), *NHA37126* (Polish), *NHA37127* (Portuguese), *NHA37129* (Turkish)
ATV660 Handbook	*NHA37111* (English), *NHA37110* (German)
ATV680 Handbook	*NHA37113* (English), *NHA37112* (German)
ATV600F, ATV900F Installation Instruction sheet	*NVE57369* (English)
ATV600, ATV900 ATEX manual	*NVE42416* (English)
SoMove: FDT	*SoMove_FDT* (English, French, German, Spanish, Italian, Chinese)
ATV600: DTM	*ATV6xx_DTM_Library_EN* (English - to be installed first), *ATV6xx_DTM_Lang_FR* (French), *ATV6xx_DTM_Lang_DE* (German), *ATV6xx_DTM_Lang_SP* (Spanish), *ATV6xx_DTM_Lang_IT* (Italian), *ATV6xx_DTM_Lang_CN* (Chinese)
ATV61-71 to ATV600-900 Migration Manual	*EAV64336* (English)
Application Note: ATV600 Multi-Drives Booster Control Optimized	*QGH36060* (English)
Application Note: ATV600 Multi-Masters Booster Control Pressure Feedback with Service Continuity	*QGH36061* (English)
Application Note: ATV600 Multi-Drives Standard Level Control	*QGH36059* (English)
Application Note: ATV600 Multi-Masters with Optimized Level Control	*EAV64367* (English)

You can download these technical publications and other technical information from our website at *www.schneider-electric.com/en/download*

Terminology

The technical terms, terminology, and the corresponding descriptions in this manual normally use the terms or definitions in the relevant standards.

In the area of drive systems this includes, but is not limited to, terms such as **error, error message, failure, fault, fault reset, protection, safe state, safety function, warning, warning message**, and so on.

Among others, these standards include:

- IEC 61800 series: Adjustable speed electrical power drive systems
- IEC 61508 Ed.2 series: Functional safety of electrical/electronic/programmable electronic safety-related
- EN 954-1 Safety of machinery - Safety related parts of control systems
- ISO 13849-1 & 2 Safety of machinery - Safety related parts of control systems
- IEC 61158 series: Industrial communication networks - Fieldbus specifications
- IEC 61784 series: Industrial communication networks - Profiles
- IEC 60204-1: Safety of machinery - Electrical equipment of machines – Part 1: General requirements

In addition, the term **zone of operation** is used in conjunction with the description of specific hazards, and is defined as it is for a **hazard zone** or **danger zone** in the EC Machinery Directive (2006/42/EC) and in ISO 12100-1.

Contact Us

Select your country on:

www.schneider-electric.com/contact

Schneider Electric Industries SAS

Head Office

35, rue Joseph Monier

92500 Rueil-Malmaison

France

Part I
Introduction

What Is in This Part?

This part contains the following chapters:

Chapter	Chapter Name	Page
1	Setup	25
2	Overview	33
3	Cyber Security	45

Chapter 1
Setup

What Is in This Chapter?

This chapter contains the following topics:

Topic	Page
Initial Steps	26
Steps for Setting-Up the Drive	28
Software Enhancements	30

Initial Steps

Before Powering up the Drive

⚠ WARNING

UNANTICIPATED EQUIPMENT OPERATION

Before switching on the device, verify that no unintended signals can be applied to the digital inputs that could cause unintended movements.

Failure to follow these instructions can result in death, serious injury, or equipment damage.

If the drive was not connected to mains for an extended period of time, the capacitors must be restored to their full performance before the motor is started.

NOTICE

REDUCED CAPACITOR PERFORMANCE

- Apply mains voltage to the drive for one hour before starting the motor if the drive has not been connected to mains for the following periods of time:
  - 12 months at a maximum storage temperature of +50°C (+122°F)
  - 24 months at a maximum storage temperature of +45°C (+113°F)
  - 36 months at a maximum storage temperature of +40°C (+104°F)
- Verify that no Run command can be applied before the period of one hour has elapsed.
- Verify the date of manufacture if the drive is commissioned for the first time and run the specified procedure if the date of manufacture is more than 12 months in the past.

Failure to follow these instructions can result in equipment damage.

If the specified procedure cannot be performed without a Run command because of internal mains contactor control, perform this procedure with the power stage enabled, but the motor being at standstill so that there is no appreciable mains current in the capacitors.

Mains Contactor

NOTICE

RISK OF DAMAGE TO THE DRIVE

Do not switch on the drive at intervals of less than 60 s.

Failure to follow these instructions can result in equipment damage.

Using a Motor with a Lower Rating or Dispensing with a Motor Altogether

In factory settings, the motor output phase loss detection is active: **[OutPhaseLoss Assign]** *oPL* is set to **[OPF Error Triggered]** *YES*. For details, refer to the parameter description *(see page 540)*. For commissioning tests or maintenance phase, the drive could be connected to a small motor power size and thus trigger an error **[Output Phase Loss]** *oPF2* or **[Single output phase loss]** *oPF1* when a Run command is applied.For that purpose, the function can be disabled by setting **[OutPhaseLossAssign]** *oPL* to **[Function Inactive]** *noo*.

Set also **[Motor control type]** *Ctt* to **[U/F VC Standard]** *Std* in **[Motor parameters]** *MPA-*. For details, refer to the parameter description *(see page 197)*.

NOTICE

MOTOR OVERHEATING

Install external thermal monitoring equipment under the following conditions:

- If a motor with a nominal current of less than 20% of the nominal current of the drive is connected.
- If you use the function Motor Switching.

Failure to follow these instructions can result in equipment damage.

⚠ ⚠ DANGER

HAZARD OF ELECTRIC SHOCK, EXPLOSION OR ARC FLASH

If output phase monitoring is disabled, phase loss and, by implication, accidental disconnection of cables, are not detected.

- Verify that the setting of this parameter does not result in unsafe conditions.

Failure to follow these instructions will result in death or serious injury.

Steps for Setting-Up the Drive

① **INSTALLATION**

Refer to the installation manual.

② **Switch On the drive without active run command.**

③ **Configure:**

- ❑ The nominal frequency of the motor **[Motor Standard]** bFr if this is not 50 Hz.
- ❑ The motor parameters including **[Motor Th Current]** ItH in the **[Motor parameters]** MPA- menu, only if the factory configuration of the drive is not suitable.
- ❑ The application functions in the **[Complete settings]** CSt - menu, only if the factory configuration of the drive is not suitable.

④ **In the [Pump start stop] PSt - menu, adjust the following parameters:**

- ❑ **[Acceleration]** ACC and **[Deceleration]** dEC
- ❑ **[Low speed]** LSP and **[High Speed]** HSP

⑤ **Start the drive.**

Drive systems may perform unexpected movements because of incorrect wiring, incorrect settings, incorrect data or other errors.

⚠ WARNING
UNANTICIPATED EQUIPMENT OPERATION • Carefully install the wiring in accordance with the EMC requirements. • Do not operate the product with unknown or unsuitable settings or data. • Perform a comprehensive commissioning test. **Failure to follow these instructions can result in death, serious injury, or equipment damage.**

Tips

Use the **[Config. Source]** FCS parameter *(see page 592)* to restore the factory settings at any time.

NOTE: The following operations must be performed for optimum drive performance in terms of accuracy and response time:

- Enter the values indicated on the motor nameplate in the **[Motor parameters]** MPA- menu.
- Perform autotuning with the motor cold and connected using the **[Autotuning]** tUn parameter.

Software Enhancements

Overview

Since the Altivar Process was first launched, it has benefited from the addition of several new functions. The software version has been updated to V2.4.

Although this documentation relates to version V2.4, it can still be used with earlier versions.

Enhancements Made to Version V1.2 in Comparison to V1.1

Factory setting	Enhancements
[Output Short Circuit Test] Strt	This function is now enabled in factory configuration and is accessible in the **[Motor monitoring]** MoP- menu

Menu	Parameter	Enhancements
[Motor parameters] MPA-	**[Motor Control Type]** Ctt	**[SYN_U VC]** SYnu: motor control type specific for permanent magnet synchronous motors
[Sleep/Wakeup] SPW-	**[Sleep Detect Mode]** SLPM	Replacement of **[Sensor]** SnSr: system enters in sleep mode on sensor condition by: • **[Flow]** LF: system enters in sleep mode on low flow • **[Pressure]** HP: system enters in sleep mode on high pressure • **[Multiple]** or: system enters in sleep mode on multiple-OR condition
		Addition of possible pressure sensor assignment and configuration for sleep function: • **[AIx Sensor config.]** SoAIX- • **[AIV1 Sensor Config.]** SoVI- • **[Sleep Pressure Level]** SLPL
	[Wake Up Mode] WuPM	Addition of **[Pressure]** LP: wake up on low-pressure condition
		Addition of possible pressure sensor assignment and configuration for wake-up function: • **[AIx Sensor config.]** WoAIX- • **[AIV1 Sensor Config.]** WoVI- • **[Wake Up Press Level]** WuPL
[Pipe fill] PFI-	**[Pipe Fill on Wake Up]** PFWu	New parameter
[Counter Management] ELt-	**[Fan operation Time]** FcPt	Replacement by **[Fan operation Time]** FPbt (32 bits)
[Data] Mtd-	**[% error EMF sync]** rdAE	This parameter is now accessible with the Graphic Display Terminal

Enhancements Made to Version V1.3 in Comparison to V1.2

In the **[Dashboard]** dSH- menu, the content of the tabs is improved for pumps and fan applications.

In the **[Complete settings]** CSt- menu, the **[Macro Configuration]** MCr- submenu is added with the **[Application Selection]** APPt parameter. It allows to hide unnecessary parameters according to the selected application type.

In the **[Pump functions]** PFt- menu, **[Booster Control]** bSt- and **[Level Control]** Lul- functions are available, including their related parameters and the settings for multi-pump architecture.

A new possible setting **[Rotational Current Injection]** rCI is added for synchronous motor **[Angle setting type]** ASt.

Up to 4 QR codes customizable with the commissioning software are displayed in **[QR code]** 9rC- menu.

Enchancements Made to Version V1.4 in Comparison to V1.3

Unification of Altivar Process ATV600 software version for all the product catalogue numbers.

Enchancements Made to Version V1.5 in Comparison to V1.4

Support of VW3A3720 EthernetIP/ModbusTCP fieldbus module.

Two virtual analog inputs has been added in **[Input/Output]** I O -, **[Sensor Assignment]** S S C - menu.

Enhancements Made to Version V1.6 in Comparison to V1.5

MultiDrive Link feature is available on ATV600 drives using a VW3A3721 EthernetIP/ModbusTCP fieldbus module.

Support of Multi Drives (1 Master drive and up to 5 slaves) and Multi Masters (1 Master only drive and up to 5 Masters or Slaves drives) architectures in **[Booster Control]** b S t - and **[Level Control]** L V L - functions.

Improvements and new functionalities on **[Booster Control]** b S t - and **[Level Control]** L V L - functions can be found in their related menus.

An output of the drive can be affected to value **[HMI cmd.]** b M P. This output is active when the Local/Remote key of Graphic Display Terminal is pressed and command and reference values comes from Graphic Display Terminal.

Enhancements Made to Version V1.7 in Comparison to V1.6

Support of VW3A3725 BACnet MS/TP fieldbus module.

Enhancements Made to Version V1.8 in Comparison to V1.7

Firmware evolution to support ATV••••••S6• and ATV••••••Y6 (600 Vac and 500/690 Vac) catalog numbers.

In the **[Catch on the fly]** F L r - Menu, a new method to estimate the speed has been added. The selection can be done through the parameter **[Catch On Fly Mode]** C o F M. In factory setting, the speed estimation is same as previous software versions.

In the Error detection disable I n H - menu, **[Forced Run]** I n H S and **[Forced Run Ref]** I n H r parameter have been added.

Enhancements Made to Version V1.9 in Comparison to V1.8

Firmware evolution to support Altivar Process Modular offer.

In the **[Catch on Fly]** F L r - menu, a new selection has been added to allow the function to be active after stop types different than freewheel.

Enhancements Made to Version V2.2 in Comparison to V1.9

Support of VW3A3619 POWERLINK fieldbus module.

In the **[Motor control]** d r C - menu, "Output Voltage Management and Overmodumation" function is added.

A new possible behavior is added for the STOP/RESET key, see **[Stop Key Enable]** P S t parameter.

Enhancements Made to Version V2.3 in Comparison to V2.2

Reluctant motor control law is added. See in the **[Complete Settings]** C S t -, **[Motor Parameters]** M P A - menu.

The virtual analog input type is now settable with **[AIVx type]** A V X t parameters.

Support of bidirectional scaled analog inputs, see **[AIx range]** A I X L parameters.

[Input phase loss] P H F is cleared as soon as its cause disappears.

Enhancements Made to Version V2.4 in Comparison to V2.3

Improvement of the function **[Stop and go]** S t G - with a time parameter.

[Output Contactor Cmd] o C C - function is now available.

Improvement of the password protection limit the access to the menus.

Chapter 2
Overview

What Is in This Chapter?

This chapter contains the following topics:

Topic	Page
Factory Configuration	34
Application Functions	35
Basic Functions	38
Graphic Display Terminal	39
Structure of the Parameter Table	43
Finding a Parameter in This Document	44

Factory Configuration

Factory Settings

The drive is factory-set for common operating conditions:

- Display: drive ready **[Pre-Ramp Ref Freq]** *FrH* when motor is ready to run and motor frequency when motor is running.
- The DI3 and DI5 to DI6 digital inputs, AI2 and AI3 analog inputs, R2 and R3 relays are unassigned.
- Stop mode when error detected: freewheel.

This table presents the basic parameters of the drive and their factory setting values:

Code	Name	Factory setting values
bFr	**[Motor Standard]**	**[50Hz IEC]** *50*
rin	**[Reverse Disable]**	**[Yes]** *YES*
tCC	**[2/3-Wire Control]**	**[2-Wire Control]** *2C*: 2-wire control
Ctt	**[Motor control type]**	**[U/F VC Quad.]** *UF9*: U/F for quadratics loads
ACC	**[Acceleration]**	10.0 s
dEC	**[Deceleration]**	10.0 s
LSP	**[Low Speed]**	0.0 Hz
HSP	**[High Speed]**	50.0 Hz
ItH	**[Motor Th Current]**	Nominal motor current (value depending on drive rating)
Frd	**[Forward]**	**[DI1]** *dI1*: Digital input DI1
Fr1	**[Ref Freq 1 Config]**	**[AI1]** *AI1*: Analog input AI1
r1	**[R1 Assignment]**	**[Operating State Fault]** *FLt*: the contact opens when the drive has detected error or when the drive has been switched off
brA	**[Dec.Ramp Adapt]**	**[Yes]** *YES*: function active (automatic adaptation of deceleration ramp)
Atr	**[Auto Fault Reset]**	**[No]** *no*: function inactive
Stt	**[Type of stop]**	**[On Ramp]** *rMP*: on ramp
Ao1	**[AQ1 assignment]**	**[Motor Frequency]** *oFr*: Motor frequency
Ao2	**[AQ2 assignment]**	**[Motor Current]** *oCr*: Motor current

NOTE: If you want to restore the drive presettings to their factory values, set **[Config. Source]** *FCS1* to **[Macro Config]** *in1*.

Verify whether the above values are compatible with the application and modify them if required.

Application Functions

Introduction

The following tables show the combinations of functions and applications in order to guide your selection.

The applications in these tables relate to the following applications:
- Borehole pump
- Pumping station
- Boosting station
- Miscellaneous: fan, compressor
- Lift station

Each application has its own special features, and the combinations listed here are not mandatory or exhaustive.

Some functions are designed specifically for a given application. In this case, the application is identified by a tab in the margin on the relevant programming pages.

⚠ WARNING

UNANTICIPATED EQUIPMENT OPERATION

Multiple functions can be assigned to and simultaneously activated via a single input.
- Verify that assigning multiple functions to a single input does not result in unsafe conditions.

Failure to follow these instructions can result in death, serious injury, or equipment damage.

Combinations of Functions and Control Functions

Function	Application				
	Borehole pump	Pumping station	Boosting station	Miscellaneous	Lift station
PID controller *(see page 303)*	✓	✓	✓	✓	
Sleep/wake up *(see page 323)*			✓		
Feedback monitoring *(see page 336)*	✓	✓	✓	✓	✓
Pump characteristics *(see page 338)*	✓	✓	✓	✓	✓
Pump start stop *(see page 350)*	✓	✓	✓	✓	✓
Pipe fill *(see page 354)*			✓	✓	
Friction loss compensation *(see page 359)*			✓		
Sensorless flow estimation *(see page 345)*	✓	✓		✓	✓
Jockey pump *(see page 363)*			✓		
Priming pump control *(see page 366)*			✓		
Flow limitation *(see page 370)*	✓	✓	✓		
Jump frequency *(see page 406)*					
Automatic restart *(see page 530)*	✓	✓		✓	✓
Catch on fly *(see page 533)*				✓	
Threshold reached *(see page 438)*	✓	✓	✓	✓	✓

Function	Application				
	Borehole pump	Pumping station	Boosting station	Miscellaneous	Lift station
Mains contactor command *(see page 440)*	✓	✓	✓	✓	✓
Reverse disable *(see page 446)*	✓	✓	✓	✓	
Torque limitation *(see page 447)*				✓	
Parameter set switching *(see page 449)*	✓	✓	✓	✓	✓
Stop on prolonged speed *(see page 457)*		✓		✓	
Acceleration deceleration ramps *(see page 413)*	✓	✓	✓	✓	✓
Motor control type *(see page 171)*	✓	✓	✓	✓	✓
Motor tune *(see page 181)*	✓	✓	✓	✓	✓
Output phase rotation *(see page 199)*	✓	✓	✓	✓	✓

Combinations of Functions and Monitoring Functions

Function	Application				
	Borehole pump	Pumping station	Boosting station	Miscellaneous	Lift station
Pumpcycle monitoring *(see page 373)*	✓	✓	✓	✓	✓
Anti-Jam *(see page 375)*		✓			✓
Dry run monitoring *(see page 381)*	✓	✓	✓	✓	✓
Pump low flow monitoring *(see page 384)*	✓	✓	✓	✓	✓
Thermal pump monitoring *(see page 188)*	✓	✓	✓	✓	✓
Inlet pressure monitoring *(see page 391)*		✓	✓		
Outlet pressure monitoring *(see page 396)*	✓	✓	✓	✓	
High flow monitoring *(see page 400)*	✓	✓	✓	✓	✓
Process underload monitoring *(see page 461)*	✓	✓	✓	✓	✓
Process overload monitoring *(see page 463)*	✓	✓	✓	✓	✓
Stall monitoring *(see page 465)*					✓
Thermal sensor monitoring *(see page 188)*	✓	✓	✓	✓	✓
Surge voltage limitation *(see page 210)*	✓	✓	✓	✓	✓
4-20 mA loss *(see page 542)*	✓	✓	✓	✓	✓
Safe Torque Off	✓	✓	✓	✓	✓

Combinations of Functions and Display Functions

Function	Application				
	Borehole pump	Pumping station	Boosting station	Miscellaneous	Lift station
Energy parameters *(see page 88)*	✓	✓	✓	✓	✓
Data logging *(see page 158)*	✓	✓	✓	✓	✓

Basic Functions

Drive Ventilation

If **[Fan mode]** FFM is set to:

- **[Standard]** Std, the operation of the fan is enabled when the motor is running. According to drive rating, this could be the only available setting.
- **[Always]** run, the fan is always activated.
- **[Economy]** ECo, the fan is activated only if necessary, according to the internal thermal state of the drive.

Fan speed and **[Fan Operation Time]** FPbt are monitored values:

- An abnormal low speed of the fan triggers a warning **[Fan Feedback Warning]** FFdA.
- As soon as **[Fan Operation Time]** FPbt reach the predefined value of 45,000 hours, a warning **[Fan Counter Warning]** FCtA is triggered.

[Fan Operation Time] FPbt counter can be set to 0 by using the **[Time Counter Reset]** rPr parameter.

Graphic Display Terminal

Description of the Graphic Display Terminal

This Graphic Display Terminal is a local control unit which can be either plugged on the drive or mounted on the door of the wall-mounted or floor-standing enclosure. It has a cable with connectors, which is connected to the drive front Modbus serial link. The Graphic Display Terminal embeds a real time clock used for the time stamping of logged data and all other functions which require time information.

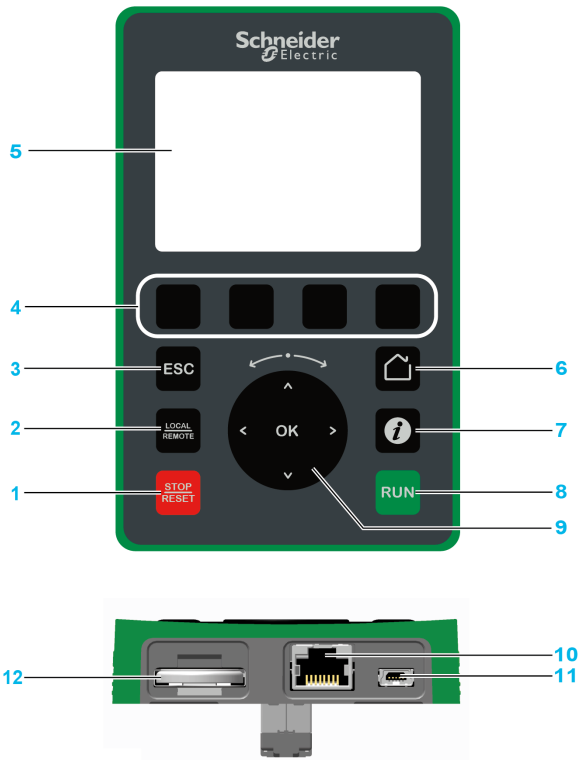

1 **STOP / RESET**: Stop command / apply a Fault Reset.
2 **LOCAL / REMOTE**: used to switch between local and remote control of the drive.
3 **ESC**: used to quit a menu/parameter or remove the currently displayed value in order to revert to the previous value retained in the memory
4 **F1 to F4**: function keys used to access drive id, QR code, quick view, and submenus. Simultaneous press of F1 and F4 keys generates a screenshot file in the Graphic Display Terminal internal memory.
5 **Graphic display**.
6 **Home**: used to access directly at the home page.
7 **Information**: used to have more information about menus, submenus, and parameters. The selected parameter or menu code is displayed on the first line of the information page.
8 **RUN**: executes the function assuming it has been configured.
9 **Touch wheel / OK**: used to save the current value or access the selected menu/parameter. The touch wheel is used to scroll fast into the menus. Up/down arrows are used for precise selections, right/left arrows are used to select digits when setting a numerical value of a parameter.
10 **RJ45 Modbus serial port**: used to connect the Graphic Display Terminal to the drive in remote control.
11 **Mini USB port**: used to connect the Graphic Display Terminal to a computer.
12 **Battery** (10 years service life. Type: CR2032). The battery positive pole points to the front face of the Graphic Display Terminal.

NOTE: Keys 1, 8 and 9 can be used to control the drive if control via the Graphic Display Terminal is activated. To activate the keys on the Graphic Display Terminal, you first need to set **[Ref Freq 1 Config]** *Fr 1* to **[Ref.Freq-Rmt.Term]** *LCC*.

Description of the Graphic Display

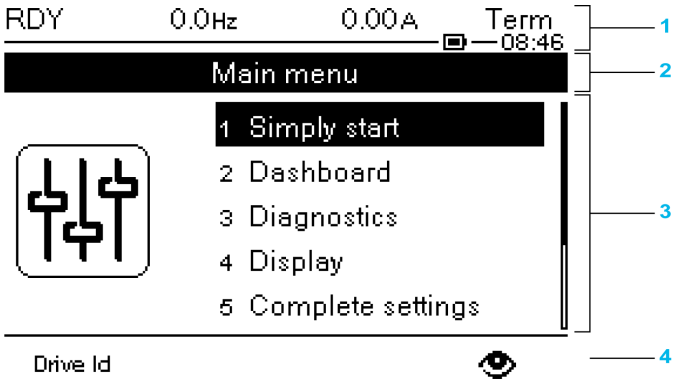

1 Display line: its content can be configured
2 Menu line: indicates the name of the current menu or submenu
3 Menus, submenus, parameters, values, bar charts, and so on, are displayed in drop-down window format on a maximum of five lines. The line or value selected by the navigation button is displayed in reverse video
4 Section displaying tabs (1 to 4 by menu), these tabs can be accessed using F1 to F4 keys

Display line details:

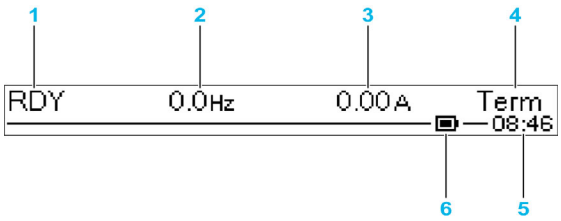

Key	
1	Drive state
2	Customer defined
3	Customer defined
4	Active control channel ● TERM: terminals ● HMI: Graphic Display Terminal ● MDB: integrated Modbus serial ● CAN: CANopen® ● NET: fieldbus module ● ETH: integrated Ethernet Modbus TCP
5	Present time
6	Battery level

Description of the Product Front LEDs

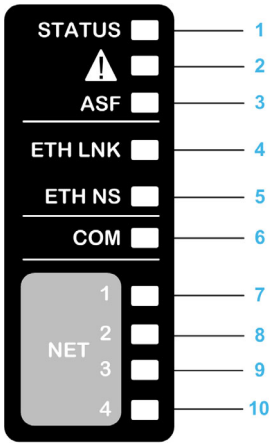

Following table provides the details of the drive status LEDs:

Item	LED	Color & status	Description
1	**STATUS**	OFF	Indicates that the drive is powered off
		Green flashing	Indicates that the drive is not running, ready to start
		Green blinking	Indicates that the drive is in transitory status (acceleration, deceleration, and so on)
		Green on	Indicates that the drive is running
2	**Warning/Error**	Red flashing	Indicates that the drive has detected a warning
		Red on	Indicates that the drive has detected an error
3	**ASF**	Yellow on	Indicates that the safety function has been triggered

Following table provides the details of the embedded Ethernet LEDs:

Item	LED	Color & status	Description
4	**ETH LNK**	OFF	Indicates that the embedded Ethernet link is not established
		Green on	Indicates that the embedded Ethernet link established at 100 Mbit/s
		Green blinking	Indicates embedded Ethernet fieldbus activity at 100 Mbit/s
		Yellow on	Indicates that the embedded Ethernet link established at 10 Mbit/s
		Yellow blinking	Indicates embedded Ethernet fieldbus activity at 10 Mbit/s
5	**ETH NS**	OFF	Indicates that the embedded Ethernet has no IP address
		Green/Red flashing	Indicates power on testing
		Green on	Indicates that the embedded Modbus TCP connection is established to the command word
		Green flashing	Indicates that the embedded Ethernet has a valid IP, but no Modbus TCP connection to the command word
		Red on	Indicates that the embedded Ethernet has detected a duplicated IP address
		Red	Indicate that the embedded Modbus TCP connection established to control the command word is closed or timed out

Following table provides the details of the embedded Modbus serial LEDs:

Item	LED	Color & status	Description
6	**COM**	Yellow flashing	Indicates embedded Modbus serial activity

Following table provides the details of the fieldbus module LEDs:

Item	LED	Color & status	Description
7	**NET 1**	Green/Yellow	for details, refer to the fieldbus manual

Item	LED	Color & status	Description
8	**NET 2**	Green/Red	for details, refer to the fieldbus manual
9	**NET 3**	Green/Red	for details, refer to the fieldbus manual
10	**NET 4**	Green/Yellow	for details, refer to the fieldbus manual

Graphic Display Terminal Connected to a Computer

NOTICE
RISK OF DAMAGE TO THE COMPUTER Do not connect equipment to the RJ45 port and to the USB port of the Graphic Display Terminal at the same time. **Failure to follow these instructions can result in equipment damage.**

The Graphic Display Terminal is recognized as a USB storage device named SE_VW3A1111 while plugged on a computer.

This allows to access the saved drive configurations (`DRVCONF` folder) and the Graphic Display Terminal screenshots (`PRTSCR` folder).

Screenshots can be stored by a simultaneous press on `F1` and `F4` function keys

How To Update Language Files on the Graphic Display Terminal

The Graphic Display Terminal (VW3A1111) language files can be updated.

Download the latest version of language files here: *Languages_Drives_VW3A1111*

The following table describe the procedure to update the language files of the Graphic Display Terminal:

Action	Step
1	Download the latest version of language files here: *Languages_Drives_VW3A1111*
2	Save the downloaded file on your computer.
3	Unzip the file and follow the instructions of the ReadMe text file.

Structure of the Parameter Table

General Legend

Pictogram	Description
★	These parameters only appear if the corresponding function has been selected in another menu. When the parameters can also be accessed and adjusted from within the configuration menu for the corresponding function, their description is detailed in these menus, on the pages indicated, to aid programming.
↻	Setting of this parameter can be done during operation or when stopped. **NOTE:** It is advisable to stop the motor before modifying any of the settings.
⌛	To modify the assignment of the parameter, reinforced validation is required.

Parameter Presentation

Below is an example of a parameter presentation:

[Sample Menu] C o d E **– Menu**

Access

Parameters described below can be accessed by:

[Path] → [Sub-path]

About this menu

Description of the menu or function

[Parameter1] C o d E 1

Description of the parameter

Example of a table with a setting range:

Setting ( )	Description
0.0… 10,000.0	Setting range Factory setting: 50.0

[Parameter2] C o d E 2

Description of the parameter

Example of a table with a list of choices:

Setting ( )	Code / Value	Description
[50 Hz IEC]	5 0	IEC **Factory setting**
[60 Hz NEMA]	6 0	NEMA

Finding a Parameter in This Document

With the Graphic Display Terminal

Select the required parameter and press .

The parameter code is displayed at the top of the information window.

Example: **[Acceleration]** code is ACC.

With the Manual

It is possible to use either the parameter name or the parameter code to search in the manual the page giving details of the selected parameter.

Difference Between Menu and Parameter

A dash after menu and submenu codes is used to differentiate menu commands from parameter codes.

Example:

Level	Name	Code
Menu	**[Ramp]**	rAMP-
Parameter	**[Acceleration]**	ACC

Chapter 3
Cyber Security

Cyber Security

Introduction

Cyber Security is a branch of network administration that addresses attacks on or by computer systems and through computer networks that can result in accidental or intentional disruptions.

The objective of Cyber Security is to help provide increased levels of protection for information and physical assets from theft, corruption, misuse, or accidents while maintaining access for their intended users.

No single Cyber Security approach is adequate. Schneider Electric recommends a defense-in-depth approach. Conceived by the **National Security Agency** (NSA), this approach layers the network with security features, appliances, and processes.

The basic components of this approach are:
- Risk assessment
- A security plan built on the results of the risk assessment
- A multi-phase training campaign
- Physical separation of the industrial networks from enterprise networks using a demilitarized zone (DMZ) and the use of firewalls and routing to establish other security zones
- System access control
- Device hardening
- Network monitoring and maintenance

This chapter defines the elements that help you configure a system that is less susceptible to cyber attacks.

For detailed information on the defense-in-depth approach, refer to the TVDA: *How Can I Reduce Vulnerability to Cyber Attacks in the Control Room (STN V2)* on the Schneider Electric website.

To submit a Cyber Security question, report security issues, or get the latest news from Schneider Electric, visit the Schneider Electric website.

Password Management

The system is secured thanks to several passwords:
- Drive password *(see page 603)* must contain six characters (blanks are allowed)
- Webserver password *(see page 613)* must contain:
  - A total of eight characters
  - At least one upper-case letter
  - At least one lower-case letter
  - At least one special character (for example, @, #, $)
  - No blank character

NOTE: After five unsuccessful login attempts, the access must be reactivated by the administrator.

Schneider Electric recommends to:
- Modify the password every 90 days
- Use a dedicated password (not related to your personal password)

NOTE: No responsibility is assumed by Schneider Electric for any consequences if anyone hacks your product password and if you use the same password for personal usage.

Backing-up and Restoring the Software Configuration

To protect your data, Schneider Electric recommends backing-up the device configuration and keeping your backup file in a safe place. The backup is available in the device DTM, using "load from device" and "store to device" functions.

Remote Access to the Drive

When remote access is used between a device and the drive, ensure your network is secure (VPN,Firewall…).

Machines, controllers, and related equipment are usually integrated into networks. Unauthorized persons and malware may gain access to the machine as well as to other devices on the network/fieldbus of the machine and connected networks via insufficiently secure access to software and networks.

⚠ WARNING

UNAUTHORIZED ACCESS TO THE MACHINE VIA SOFTWARE AND NETWORKS

- In your hazard and risk analysis, consider all hazards that result from access to and operation on the network/fieldbus and develop an appropriate cyber security concept.
- Verify that the hardware infrastructure and the software infrastructure into which the machine is integrated as well as all organizational measures and rules covering access to this infrastructure consider the results of the hazard and risk analysis and are implemented according to best practices and standards covering IT security and cyber security (such as: ISO/IEC 27000 series, Common Criteria for Information Technology Security Evaluation, ISO/ IEC 15408, IEC 62351, ISA/IEC 62443, NIST Cybersecurity Framework, Information Security Forum - Standard of Good Practice for Information Security).
- Verify the effectiveness of your IT security and cyber security systems using appropriate, proven methods.

Failure to follow these instructions can result in death, serious injury, or equipment damage.

Data Flow Restriction

To secure the access to the drive and limit the data flow, the use of a firewall device is required.

ConneXium Tofino Firewall Product

The ConneXium TCSEFEA Tofino Firewall is a security appliance that provides levels of protection against cyber threats for industrial networks, automation systems, SCADA systems, and process control systems.

This Firewall is designed to permit or deny communications between devices connected to the external network connection of the Firewall and the protected devices connected to the internal network connection.

The Firewall can restrict network traffic based on user defined rules that would permit only authorized devices, communication types and services.

The Firewall includes built-in security modules and an off-line configuration tool for creating secure zones within an industrial automation environment.

Control Command Restriction

To prevent unauthorized use of the command of the drive, it is possible to grant access to a limited number of IP address using the IP master parameter.

The parameter IP Master defines which device can command with the device. This parameter is available in the device DTM.

Deactivation of unused functions

To avoid unauthorized access, it is advisable to deactivate unused functions.

Example: WebServer, Fast Device Replacement …

Part II
Programming

What Is in This Part?

This part contains the following chapters:

Chapter	Chapter Name	Page
4	[Simply start] SYS -	49
5	[Dashboard] dSH -	57
6	[Diagnostics] d iA -	71
7	[Display] Mon -	87
8	[Complete settings] CSt -	163
9	[Communication] Com -	579
10	[File management] FMt -	591
11	[My preferences] MYP -	601

Chapter 4
[Simply start] SYS -

Introduction

[Simply start] SYS - menu contains 3 tabs for quick access to mains features:

- Simply Start tab which gives a quick access to basic parameters to set.
- My Menu tab which is a user-defined menu for quick access to specific parameters.
- Modified Parameters tab which gives a quick access to the 10 last modified parameters.

What Is in This Chapter?

This chapter contains the following topics:

Topic	Page
[Simply start] S iP - Menu	50
[My menu] MYMn - Menu	55
[Modified parameters] LMd - Menu	55

[Simply start] S I M - Menu

Access

[Simply start] ➡ **[Simply start]**

About This Menu

⚠ WARNING

LOSS OF CONTROL

- Fully read and understand the manual of the connected motor.
- Verify that all motor parameters are correctly set by referring to the nameplate and the manual of the connected motor.

Failure to follow these instructions can result in death, serious injury, or equipment damage.

This menu provides a quick access to the basic parameters to set.

[Motor Standard] b F r ★

Motor standard.

This parameter can be accessed if **[Motor control type]** C t t is not set to **[SYN_U VC]** S Y n u and **[Rel. Mot.]** S r V C.

This parameter modifies the presets of the following parameters:

- **[High Speed]** H S P
- **[Motor Freq Thd]** F t d
- **[Nom Motor Voltage]** u n S
- **[Nominal Motor Freq]** F r S
- **[Max Frequency]** t F r

NOTE: The factory setting value is changed to **[60 Hz NEMA]** 6 0 for ATV630●●●S6● catalog numbers.

Setting	Code / Value	Description
[50 Hz IEC]	5 0	IEC **Factory setting**
[60 Hz NEMA]	6 0	NEMA

[Nominal motor power] n P r ★

Nominal motor power.

This parameter can be accessed if:

- **[Motor control type]** C t t is not set to **[SYN_U VC]** S Y n u and **[Rel. Mot.]** S r V C, and
- **[Motor param choice]** M P C is set to **[Mot Power]** n P r.

Rated motor power given on the nameplate, in kW if **[Motor Standard]** b F r is set to **[50Hz IEC]** 5 0, in HP if **[Motor Standard]** b F r is set to **[60Hz NEMA]** 6 0.

Setting	Description
According to drive rating	Setting range **Factory setting**: according to the drive rating

[Nom Motor Voltage] ★

Nominal motor voltage.

This parameter can be accessed if **[Motor control type]** is not set to **[SYN_U VC]** and **[Rel. Mot.]** .

Rated motor voltage given on the nameplate.

Setting	Description
100.0...690.0 Vac	Setting range **Factory setting**: according to drive rating and **[Motor Standard]**

[Nom Motor Current] ★

Rated motor current given on the nameplate.

This parameter can be accessed if **[Motor control type]** is not set to **[SYN_U VC]** and **[Rel. Mot.]** .

Setting	Description
0.15...1.5 In (1)	Setting range **Factory setting**: according to drive rating and **[Motor Standard]**
(1) Corresponding to the rated drive current indicated in the installation manual and on the drive nameplate.	

[Nominal Motor Freq] ★

Nominal motor frequency.

This parameter can be accessed if **[Motor control type]** is not set to **[SYN_U VC]** and **[Rel. Mot.]** .

The factory setting is 50 Hz, or preset to 60 Hz if **[Motor Standard]** is set to 60 Hz.

Setting	Description
40.0...500.0 Hz	Setting range **Factory setting**: 50.0 Hz

[Nominal Motor Speed] ★

Nominal motor speed.

This parameter can be accessed if **[Motor control type]** is not set to **[SYN_U VC]** and **[Rel. Mot.]** .

If the nameplate indicates the synchronous speed and the slip in Hz or as a %, use one of the formulas to calculate the rated speed:

- Nominal speed = Synchronous speed x $\frac{100 - \text{slip as a \%}}{100}$
- Nominal speed = Synchronous speed x $\frac{60 - \text{slip in Hz}}{60}$ (60 Hz motors)
- Nominal speed = Synchronous speed x $\frac{50 - \text{slip in Hz}}{50}$ (50 Hz motors).

Setting	Description
0...65,535 rpm	Setting range **Factory setting**: according to drive rating

[Motor 1 Cosinus Phi] $C o S$ ★

Nominal motor cosinus Phi.

This parameter can be accessed if:

- **[Motor control type]** $C t t$ is not set to **[SYN_U VC]** $S Y n u$ and **[Rel. Mot.]** $S r V C$, and
- **[Motor param choice]** $M P C$ is set to **[Mot Cosinus]** $C o S$.

Setting	Description
0.50...1.00	Setting range **Factory setting**: according to the drive rating

[2/3-Wire Control] $t C C$

2-wire or 3-wire control.

⚠ WARNING

UNANTICIPATED EQUIPMENT OPERATION

If this parameter is changed, the parameters **[Reverse Assign]** $r r S$ and **[2-wire type]** $t C t$ and the assignments of the digital inputs are reset to the factory setting.

Verify that this change is compatible with the type of wiring used.

Failure to follow these instructions can result in death, serious injury, or equipment damage.

Setting	Code / Value	Description
[2-Wire Control]	$2C$	**2-wire control (level commands):** This is the input state (0 or 1) or edge (0 to 1 or 1 to 0), which controls running or stopping. Example of **source** wiring: 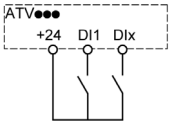 **DI1** Forward **DIx** Reverse **Factory setting**
[3-Wire Control]	$3C$	**3-wire control (pulse commands) [3 wire]:** A **forward** or **reverse** pulse is sufficient to command starting, a **stop** pulse is sufficient to command stopping. Example of **source** wiring: 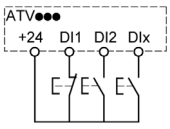 **DI1** Stop **DI2** Forward **DIx** Reverse

[Max Frequency] $t F r$

Maximum output frequency.

The factory setting is 60 Hz, or preset to 72 Hz if **[Motor Standard]** $b F r$ is set to 60 Hz.

Setting	Description
10.0...500.0 Hz(1)	Setting range **Factory setting**: 60 Hz
(1) The maximum of the range is 10 * **[Nominal Motor Freq]** $F r S$ for an asynchronous law or 10 * **[Sync Nominal Freq]** $F r S S$ for a synchronous law.	

[Autotuning] tun

⚠ WARNING

UNEXPECTED MOVEMENT

Autotuning moves the motor in order to tune the control loops.

- Only start the system if there are no persons or obstructions in the zone of operation.

Failure to follow these instructions can result in death, serious injury, or equipment damage.

During autotuning, noise development and oscillations of the system are normal.

If **[Autotuning Type]** tunt is set to **[Standard]** std, during autotuning, the motor makes small movements.

If **[Autotuning Type]** tunt is set to **[Rotation]** rot, during autotuning, the motor runs at half of its nominal frequency.

In any case, the motor has to be stopped before performing a tune operation. Verify that the application does not make the motor turn during the tune operation.

The tune operation optimizes:

- The motor performances at low speed.
- The estimation of the motor torque.
- The accuracy of the estimation of the process values in sensorless operation and monitoring.

Autotuning is only performed if no stop command has been activated. If a “freewheel stop” or “fast stop” function has been assigned to a digital input, this input must be set to 1 (active at 0).

Autotuning takes priority over any run or prefluxing commands, which will be taken into account after the autotuning sequence.

If autotuning has detected error, the drive always displays **[No action]** nO and, depending on the configuration of **[Tuning Error Resp]** tnL, may switch to **[Autotuning]** tun detected error mode.

Autotuning may last for several seconds. Do not interrupt the process. Wait for the Graphic Display Terminal to change to **[No action]** nO.

NOTE: The motor thermal state has a significant influence on the tuning result. Always perform a motor tuning with the motor stopped and cold. Verify that the application does not have the motor operate during a tuning operation.

To redo a motor tuning, wait that it is stopped and cold. Set first **[Autotuning]** tun to **[Erase Autotuning]** CLr, then redo the motor tuning.

The use of the motor tuning without doing a **[Erase Autotuning]** CLr first is used to get the thermal state estimation of the motor.

The cable length has an influence on the tune result. If the wiring is modified, it is necessary to redo the tune operation.

Setting	Code / Value	Description
[No action]	nO	Autotuning not in progress **Factory setting**
[Apply Autotuning]	YES	Autotuning is performed immediately if possible, then the parameter automatically changes to **[No action]** nO. If the drive state does not allow the tune operation immediately, the parameter changes to **[No action]** nO and the operation must be done again.
[Erase Autotuning]	CLr	The motor parameters measured by the autotuning function are reset. The default motor parameter values are used to control the motor. **[Autotuning Status]** tuS is set to **[Not done]** tAb.

[Autotuning Status] tUS

Autotuning status.

(for information only, cannot be modified)

This parameter is not saved at drive power off. It shows the autotuning status since last power-on.

Setting	Code / Value	Description
[Not done]	tAb	Autotune is not done **Factory setting**
[Pending]	PEnd	Autotune has been requested but not yet performed
[In Progress]	PrOG	Autotune is in progress
[Error]	FAIL	Autotune has detected an error
[Autotuning Done]	donE	The motor parameters measured by the autotuning function are used to control the motor

[Tune Selection] StUn ★

Tune selection.

Setting	Code / Value	Description
[Default]	tAb	The default motor parameter values are used to control the motor **Factory setting**
[Measure]	MEAS	The values measured by the autotuning function are used to control the motor
[Custom]	CUS	The values manually set are used to control the motor

[Motor Th Current] ItH

Motor thermal monitoring current to be set to the rated current indicated on the nameplate.

Setting	Description
0.12...1.1 In(1)	Setting range **Factory setting**: According to drive rating
(1) Corresponding to the rated drive current indicated in the installation manual and on the drive nameplate.	

[Acceleration] ACC

Time to accelerate from 0 to the **[Nominal Motor Freq]** FrS. To have a repeatability in the ramps, the value of this parameter must be set according to the possibility of the application.

Setting	Description
0.0...6,000.0 s (1)	Setting range **Factory setting**: 10.0 s
(1) Range 0.01 to 99.99 s or 0.1 to 999.9 s or 1...6,000 s according to **[Ramp increment]** Inr.	

[Deceleration] dEC

Time to decelerate from the **[Nominal Motor Freq]** FrS to 0. To have a repeatability in the ramps, the value of this parameter must be set according to the possibility of the application.

Setting	Description
0.0...6,000.0 s (1)	Setting range **Factory setting**: 10.0 s
(1) Range 0.01 to 99.99 s or 0.1 to 999.9 s or 1...6,000 s according to **[Ramp increment]** Inr.	

[Low Speed] LSP

Low speed.

Motor frequency at minimum reference, can be set between 0 and **[High Speed]** HSP.

Setting	Description
0.0... **[High Speed]** HSP Hz	Setting range **Factory setting**: 0.0 Hz

[High Speed] HSP

High speed.

Motor frequency at maximum reference, can be set between **[Low Speed]** LSP and **[Max Frequency]** tFr. The factory setting changes to 60 Hz if **[Motor Standard]** bFr is set to **[60Hz NEMA]** 60.

Setting	Description
0.0...**[Max Frequency]** tFr Hz	Setting range **Factory setting**: 50.0 Hz

[My menu] MYMn - Menu

Access

[Simply start] ➡ **[My menu]**

About This Menu

This menu contains the parameters selected in the **[My menu config.]** MYC - Menu.

NOTE: This menu is empty by default.

[Modified parameters] LMd - Menu

Access

[Simply start] ➡ **[Modified parameters]**

About This Menu

This menu gives a quick access to the 10 last modified parameters (or the full list in the DTM)

Chapter 5
[Dashboard] dSH-

Introduction

[Dashboard] dSH- menu contains tabs for quick access to system and display features:

- System tab to configure the main system parameters.
- Energy tab which provides a complete access for instantaneous power counters and energy reports by means of graphics on the Graphic Display Terminal.

What Is in This Chapter?

This chapter contains the following topics:

Topic	Page
[Pump dashboard] PMP- Menu	58
[Fan dashboard] FAn- Menu	60
[Dashboard] dSH- Menu	62
[Control] CtrL- Menu	63
[Control] FtrL- Menu	66
[Dashboard] dSH- Menu	67
[kWh Counters]kWC- menu	68
[Dashboard] dSH- Menu	70

[Pump dashboard] PMP - Menu

Access

[Dashboard] ➡ **[Pump dashboard]**

About This Menu

This menu provides informations related to the pump.

This menu can be accessed if **[Application Selection]** APPL is not set to **[Generic Fan Control]** FAn.

[Pre-Ramp Ref Freq] FrH

Frequency reference before ramp (signed value).

Actual frequency reference linked to the motor regardless of which channel for reference value has been selected. This parameter is in read-only mode.

Setting	Description
-**[High Speed]** HSP...**[High Speed]** HSP Hz	Setting range **Factory setting: –**

[Drive State] HMI,S

Drive state.

Setting	Code / Value	Description
[Autotuning]	tUn	Autotuning
[In DC inject.]	dCb	DC Injection
[Ready]	rdY	Drive ready
[Freewheel]	nSt	Freewheel stop control
[Running]	rUn	Motor in steady state or run command present and zero reference
[Accelerating]	ACC	Acceleration
[Decelerating]	dEC	Deceleration
[Current limitation]	CL,	In current limitation
[Fast stop]	FSt	Fast stop
[No Mains Voltage]	nLP	Control is powered on but the DC bus is not loaded
[control.stop]	CtL	Controlled stop
[Dec. adapt.]	obr	Adapted deceleration
[Output cut]	SoC	Stand by output cut
[Undervoltage Warning]	USA	Undervoltage warning
["Operating State "Fault""]	FLt	Product has detected an error
[DCP Flashing Mode]	dCP	DCP flashing mode
[STO Active]	Sto	Safe Torque Off active
[Energy Saving]	,dLE	Idle stop and go mode
[Firmware Update]	FWuP	Firmeware update
[AFE Mains Undervoltage]	urA	Displayed if the voltage applied on the Active Front End power brick exceeds the **[Mains Voltage]** urES, the drive stops on **[Freewheel Stop]** nSt.

[MultiPump State] MPS ★

Multipump function state.

This parameter can be accessed if **[Pump System Archi]** MPSA is not set to **[No]** no.

Setting	Code / Value	Description
[None]	nonE	None
[Ready]	rEAdY	Ready
[Running]	run	Running
[Warning]	ALArM	Warning
[Error]	FAuLt	Error
[Not Available]	nAVL	Not available

[Available Pumps] MPAn ★

Number of available pumps.

This parameter can be accessed if **[Pump System Archi]** MPSA is not set to **[No]** no.

Setting	Description
0...**[Nb Of Pumps]** MPPn	Setting range **Factory setting: –**

[Nb of Staged Pumps] MPSn ★

Number of staged pumps.

This parameter can be accessed if **[Pump System Archi]** MPSA is not set to **[No]** no.

Setting	Description
0...**[Nb Of Pumps]** MPPn	Setting range **Factory setting: –**

[Motor Current] LCr

Motor current.

Setting	Description
According to drive rating	Setting range **Factory setting: –**

[Motor speed] SPd

Motor speed in rpm.

This parameter displays the estimated rotor speed without motor slip.

Setting	Description
0...65,535 rpm	Setting range **Factory setting: –**

[Motor Therm state] tHr

Motor thermal state.

The normal motor thermal state is 100%, the **[Motor Overload]** oLF threshold is set to 118%.

Setting	Description
0...200%	Setting range **Factory setting: –**

[Fan dashboard] FAn - Menu

Access

[Dashboard] ➡ [Fan dashboard]

About This Menu

This menu provides informations related to the fan.

This menu can be accessed if **[Application Selection]** APPL is set to **[Generic Fan Control]** FAn.

[Pre-Ramp Ref Freq] FrH

Frequency reference before ramp (signed value).

Actual frequency reference linked to the motor regardless of which channel for reference value has been selected. This parameter is in read-only mode.

Setting	Description
-**[High Speed]** HSP...**[High Speed]** HSP Hz	Setting range **Factory setting: –**

[Drive State] HMI,S

Drive state.

Setting	Code / Value	Description
[Autotuning]	tUn	Autotuning
[In DC inject.]	dCb	DC Injection
[Ready]	rdy	Drive ready
[Freewheel]	nSt	Freewheel stop control
[Running]	rUn	Motor in steady state or run command present and zero reference
[Accelerating]	ACC	Acceleration
[Decelerating]	dEC	Deceleration
[Current limitation]	CL,	In current limitation
[Fast stop]	FSt	Fast stop
[No Mains Voltage]	nLP	Control is powered on but the DC bus is not loaded
[control.stop]	CtL	Controlled stop
[Dec. adapt.]	obr	Adapted deceleration
[Output cut]	SoC	Stand by output cut
[Undervoltage Warning]	USA	Undervoltage warning
["Operating State "Fault""]	FLt	Product has detected an error
[DCP Flashing Mode]	dCP	DCP flashing mode
[STO Active]	Sto	Safe Torque Off active
[Energy Saving]	,dLE	Idle stop and go mode
[Firmware Update]	FWuP	Firmeware update
[AFE Mains Undervoltage]	urA	Displayed if the voltage applied on the Active Front End power brick exceeds the **[Mains Voltage]** urES, the drive stops on **[Freewheel Stop]** nSt.

[Motor Current] LCr

Motor current.

Setting	Description
According to drive rating	Setting range **Factory setting: –**

[Motor speed] SPd

Motor speed in rpm.

This parameter displays the estimated rotor speed without motor slip.

Setting	Description
0...65,535 rpm	Setting range **Factory setting: –**

[Motor Therm state] EHr

Motor thermal state.

The nominal motor thermal state is 100%, the **[Motor Overload]** oLF threshold is set to 118%.

Setting	Description
0...200%	Setting range **Factory setting: –**

[Dashboard] d S H - Menu

Access

[Dashboard]

About This Menu

Using **F4** function key on the Graphic Display Terminal, it is possible to select one of the following view for the **[Pump dashboard]** or **[Fan dashboard]** tab.

Pump curves and actual working point are available if valid pump characteristics have been entered and if **[Pump Curve Activate]** P C A is set to **[Yes]** Y E S.

[Operating time report] H o t

Displays the operating time histogram.

[Nb start report] H n S

Displays the number of start histogram.

[Power vs Flow] C P Q

This shows the mechanical power versus the flow curve of the system.

[Head vs Flow] C H Q

This shows the head of the pump versus the flow curve of the system.

[Efficiency vs Flow] C E Q

This shows the efficiency (%) versus flow curve of the system.

[Efficiency] E F F

Displays the instantaneous efficiency curve.

[Control] CtrL - Menu

Access

[Dashboard] ➡ **[Control]**

About This Menu

This menu can be accessed if **[Application Selection]** APPL is not set to **[Generic Fan Control]** FAn.

[System App State] APSS

System application state.

This parameter indicates the installation application state.

This parameter can be accessed if **[Pump System Archi]** MPSA is set to **[Multi Drives]** nVSd or **[Multi Masters]** nVSdr.

Setting	Code / Value	Description
[Running]	run	No application function in progress; the drive is running
[Stop]	StoP	No application function in progress; the drive is not running
[Manual Mode Active]	MAnu	Motor running; manual PID mode is active
[PID Active]	Auto	Motor running; auto PID mode is active
[Flow Limit In Progress]	FLiM	The flow limitation is in progress
[PipeFill In Progress]	FiLL	The pipe fill is in progress
[Jockey Pump Active]	JoCKEY	The jockey pump is active
[Boost In progress]	booSt	The boost is in progress
[Sleep Active]	SLEEP	The sleep is active
[Priming Pump Active]	PriM	The priming pump is active
[InletPres Comp In Progress]	CoMP	The inlet pressure compensation is in progress

[Application State] APPS

Application state.

This parameter indicates the drive application state.

Setting	Code / Value	Description
[Running]	run	No application function in progress; the drive is running
[Stop]	StoP	No application function in progress; the drive is not running
[Local Mode Active]	LoCAL	Forced local mode activated
[Channel 2 Active]	oVEr	Override speed control mode activated
[Manual Mode Active]	MAnu	Motor running; manual PID mode is active
[PID Active]	Auto	Motor running; auto PID mode is active
[Antijam In Progress]	AJAM	The Anti-jam is in progress
[Flow Limit In Progress]	FLiM	The flow limitation is in progress
[PipeFill In Progress]	FiLL	The pipe fill is in progress
[Jockey Pump Active]	JoCKEY	The jockey pump is active
[Boost In progress]	booSt	The boost is in progress

Setting	Code / Value	Description
[Sleep Active]	SLEEP	The sleep is active
[Priming Pump Active]	Pr iM	The priming pump is active
[InletPres Comp In Progress]	CoMP	The inlet pressure compensation is in progress

[Booster Status] bCS ★

Booster status.

This parameter can be accessed if **[Application Selection]** APPt is set to **[Pump Booster Control]** boo St and **[Booster Control]** is set to **[Yes]** YES.

Setting	Code / Value	Description
[None]	nonE	Not configured
[Inactive]	nAct	Inactive
[Running]	run	Running
[Stage Pending]	StGP	Stage pending
[Destage Pending]	dStGP	Destage pending
[Staging]	StG	Staging in progress
[Destaging]	dStG	Destage in progress

[LevelCtrl Status] LCS ★

Level control status.

This parameter can be accessed if **[Application Selection]** APPt is set to **[Pump Level Control]** LEVEL and **[LevelCtrl Mode]** LCM is not set to **[No]** no.

Setting	Code / Value	Description
[None]	nonE	Not configured
[Inactive]	nAct	Inactive
[Filling]	FiLL	Filling in progress
[Emptying]	EMPtY	Emptying in progress
[Low Level]	LoW	Low level
[High Level]	hiGh	High level

[Tank Level] LCtL ★

Tank level.

This parameter can be accessed if **[Application Selection]** APPt is set to **[Pump Level Control]** LEVEL and **[LevelCtrl Mode]** LCM is not set to **[No]** no.

Setting	Description
0.0...100.0%	Setting range **Factory setting: –**

[PID Reference] rPC ★

PID reference.

This parameter can be accessed if **[PID Feedback]** PiF is not set to **[Not Configured]** no.

Setting	Description
0...65,535%	Setting range **Factory setting: –**

[PID Feedback] rPF ★

PID feedback.

This parameter can be accessed if **[PID Feedback]** PiF is not set to **[Not Configured]** no.

Setting	Description
0...65,535%	Setting range **Factory setting: –**

[Outlet Pressure] PS2u

Outlet pressure value.

This parameter can be accessed if **[OutletPres Assign]** PS2A is not set to **[Not Configured]** no.

Setting	Description
-32,767...32,767	Setting range according to **[P sensor unit]** SuPr **Factory setting: –**

[Inlet Press. Value] PSIu

Inlet pressure value.

This parameter can be accessed if **[InletPres Assign]** PSIA is not set to **[Not Configured]** no.

Setting	Description
-32,767...32,767	Setting range according to **[P sensor unit]** SuPr **Factory setting: –**

[Installation Flow] FSIu

Flow rate sensor value.

This parameter can be accessed if **[Inst. Flow Assign.]** FSIA is not set to **[Not Configured]** no.

Setting	Description
-32,767...32,767	Setting range according to **[Flow rate unit]** SuFr **Factory setting: –**

[Flow Estimated] SLFV ★

Estimated flow value.

This parameter can be accessed if **[Flow Estimation Mode]** FEM is not set to **[No]** no.

Setting	Description
-32,767...32,767	Setting range according to **[Flow rate unit]** SuFr **Factory setting: –**

[Control] F t r - Menu

Access

[Dashboard] ➡ **[Control]**

About This Menu

This menu can be accessed if **[Application Selection]** A P P t is set to **[Generic Fan Control]** F A n.

[PID Reference] r P C ★

PID reference.

This parameter can be accessed if **[PID Feedback]** P I F is not set to **[Not Configured]** n o.

Setting	Description
0...65,535%	Setting range **Factory setting: –**

[PID Feedback] r P F ★

PID feedback.

This parameter can be accessed if **[PID Feedback]** P I F is not set to **[Not Configured]** n o.

Setting	Description
0...65,535%	Setting range **Factory setting: –**

[Dashboard] d S H - Menu

Access

[Dashboard]

About This Menu

Using **F4** function key on the Graphic Display Terminal, it is possible to select one of the following view for the **[Control]** tab.

[PID Feedback Trend] P F t

Displays the instantaneous PID controller feedback curve.

[Outlet Pressure Trend] o P t

Displays the instantaneous outlet pressure curve.

[Inlet Pressure Trend] i P t

Displays the instantaneous inlet pressure curve.

[Installation Flow Trend] i F t

Displays the instantaneous installation flow curve.

[kWh Counters] kWC - menu

Access

[Dashboard] ➡ **[kWh Counters]**

About This Menu

This menu presents many energy objects available for instantaneous data and kW consumption reports.

It offers the possibility to display logged data with graphics by pressing the F4 function key.

[Elc Energy Cons] oC4★

Electrical energy consumed by the motor in TWh.

This parameter can be accessed if **[Elc energy cons(TWh)]** oC4 is not set to 0.

Setting	Description
0...999 TWh	Setting range **Factory setting**: Read Only

[Elc Energy Cons] oC3★

Electrical energy consumed by the motor in GWh.

Setting	Description
0...999 GWh	Setting range **Factory setting**: Read Only

[Elc Energy Cons] oC2★

Electrical energy consumed by the motor in MWh.

Setting	Description
0...999 MWh	Setting range **Factory setting**: Read Only

[Elc Energy Cons] oC1★

Electrical energy consumed by the motor in kWh.

Setting	Description
0...999 kWh	Setting range **Factory setting**: Read Only

[Elc Energy Cons] oC0★

Electrical energy consumed by the motor in Wh.

Setting	Description
0...999 Wh	Setting range **Factory setting**: Read Only

[Acv Elc Out Pwr Estm] EPrW

Active electrical output power estimation.

Setting	Description
-32,767...32,767	Setting range Value in kW or HP according to **[Motor Standard]** bFr setting **Factory setting**: Read Only

[Elc Egy Today] oCt

Electrical energy consumed today by the motor in kWh.

Setting	Description
0...4,294,967,295 kWh	Setting range in kWh **Factory setting**: Read Only

[Elc Egy Yesterday] oCY

Electrical energy consumed yesterday by the motor in kWh.

Setting	Description
0...4,294,967,295 kWh	Setting range in kWh **Factory setting**: Read Only

[Dashboard] d S H - Menu

Access

[Dashboard]

About This Menu

Using **F4** function key on the Graphic Display Terminal, it is possible to select one of the following view for the **[Energy]** tab.

[Instant kW Trend] C V I

Displays the instantaneous electrical energy curve at the drive output.

[Daily kWh Report] H S d

Displays the daily energy histogram.

[Weekly kWh Report] H S W

Displays the weekly energy histogram.

[Monthly kWh Report] H S M

Displays the monthly energy histogram.

[Yearly kWh Report] H S Y

Displays the yearly energy histogram.

Chapter 6
[Diagnostics] d iA -

Introduction

[Diagnostics] d iA - menu presents drive and application data useful when diagnostics is required.

What Is in This Chapter?

This chapter contains the following sections:

Section	Topic	Page
6.1	**[Diag. data]**	72
6.2	**[Error history]** PFH - Menu	81
6.3	**[Warnings]** ALr - Menu	84

Section 6.1
[Diag. data]

What Is in This Section?

This section contains the following topics:

Topic	Page
[Diag. data] dd t - Menu	73
[Service message] SEr - Menu	78
[Other State] SSt - Menu	79
[Diagnostics] dRu - Menu	80
[Identification] o id - Menu	80

[Diag. data] d d t - Menu

Access

[Diagnostics] ➡ [Diag. data]

About This Menu

This menu presents the actual warning and detected error in addition to drive data.

[Last Warning] L A L r

Last warning which occurred.

Setting	Code	Description
[No Warning stored]	n o A	No warning stored
[Fallback Frequency]	F r F	Reaction on event: Fallback frequency
[Speed Maintained]	r L S	Reaction on event: Speed maintained
[Type of stop]	S t t	Reaction on event: Stop following [Type of stop] S t t without triggering an error
[Ref Frequency Warning]	S r A	Frequency reference reached
[Life Cycle Warn 1]	L C A 1	Life cycle warning 1 *(see page 561)*
[Life Cycle Warn 2]	L C A 2	Life cycle warning 2 *(see page 561)*
[Dry Run Warning]	d r Y A	Dry run warning *(see page 381)*
[High Flow Warning]	H F P A	High flow warning *(see page 400)*
[InPress Warning]	I P P A	Inlet pressure monitoring warning *(see page 391)*
[Low OutPres Warn]	o P L A	Low outlet pressure warning *(see page 396)*
[High OutPres Warn]	o P H A	High outlet pressure warning *(see page 396)*
[PumpCycle warning]	P C P A	Pumpcycle monitoring warning *(see page 373)*
[Anti-Jam Warning]	J A M A	Anti-jam warning *(see page 375)*
[Pump Low Flow]	P L F A	Pump low flow warning *(see page 384)*
[LowPres Warning]	L P A	Low pressure warning
[Flow Limit activated]	F S A	Flow limitation function is active *(see page 370)*
[PID error Warning]	P E E	PID error warning *(see page 321)*
[PID Feedback Warn]	P F A	PID feedback warning *(see page 314)*
[PID High Fdbck Warn]	P F A H	PID feedback high threshold reached *(see page 314)*
[PID Low Fdbck Warn]	P F A L	PID feedback low threshold reached *(see page 314)*
[Regulation Warning]	P I S H	PID feedback monitoring warning *(see page 336)*
[AI2 Th Warning]	t P 2 A	AI2 Thermal warning *(see page 188)*
[AI3 Th Warning]	t P 3 A	AI3 Thermal warning *(see page 188)*
[AI4 Th Warning]	t P 4 A	AI4 Thermal warning *(see page 188)*
[AI5 Th Warning]	t P 5 A	AI5 Thermal warning *(see page 188)*
[AI1 4-20 Loss Warning]	A P 1	AI1 4-20 mA loss warning *(see page 542)*
[AI2 4-20 Loss Warning]	A P 2	AI2 4-20 mA loss warning *(see page 542)*
[AI3 4-20 Loss Warning]	A P 3	AI3 4-20 mA loss warning *(see page 542)*
[AI4 4-20 Loss Warning]	A P 4	AI4 4-20 mA loss warning *(see page 542)*
[AI5 4-20 Loss Warning]	A P 5	AI5 4-20 mA loss warning *(see page 542)*
[Drive Thermal Warning]	t H A	Drive overhearting warning
[IGBT Thermal Warning]	t J A	IGBT thermal state warning
[Fan Counter Warning]	F C t A	Fan counter speed warning *(see page 566)*
[Fan Feedback Warning]	F F d A	Fan feedback warning *(see page 566)*
[Ext. Error Warning]	E F A	External error warning *(see page 538)*
[Undervoltage Warning]	u S A	Undervoltage warning *(see page 549)*
[Preventive UnderV Active]	u P A	Controlled stop threshold is reached *(see page 549)*

Setting	Code	Description
[Mot Freq High Thd]	FtA	Motor frequency high threshold 1 reached *(see page 438)*
[Mot Freq Low Thd]	FtAL	Motor frequency low threshold 1 reached *(see page 438)*
[Mot Freq Low Thd 2]	F2AL	Motor frequency low threshold 2 reached *(see page 438)*
[High Speed Reached]	FLA	High speed reached warning
[Ref Freq High Thd reached]	rtAH	Reference frequency high threshold reached *(see page 439)*
[Ref Freq Low Thd reached]	rtAL	Reference frequency low threshold reached *(see page 439)*
[2nd Freq Thd Reached]	F2A	Motor frequency high threshold 2 reached *(see page 438)*
[Current Thd Reached]	CtA	Motor current high treshold reached *(see page 438)*
[Low Current Reached]	CtAL	Motor current low threshold reached *(see page 438)*
[High Torque Warning]	ttHA	High torque threshold reached *(see page 439)*
[Low Torque Warning]	ttLA	Low torque threshold reached *(see page 439)*
[Process Undld Warning]	uLA	Underload warning *(see page 461)*
[Process Overload Warning]	oLA	Overload warning *(see page 463)*
[Drv Therm Thd reached]	tAd	Drive thermal threshold reached *(see page 554)*
[Motor Therm Thd reached]	tSA	Motor thermal threshold reached *(see page 439)*
[Power High Threshold]	PtHA	Power high threshold reached *(see page 91)*
[Power Low Threshold]	PtHL	Power low threshold reached *(see page 91)*
[Cust Warning 1]	CAS1	Customer warning 1 active *(see page 562)*
[Cust Warning 2]	CAS2	Customer warning 2 active *(see page 563)*
[Cust Warning 3]	CAS3	Customer warning 3 active *(see page 563)*
[Cust Warning 4]	CAS4	Customer warning 4 active *(see page 564)*
[Cust Warning 5]	CASS	Customer warning 5 active *(see page 564)*
[AFE Mains Undervoltage]	urA	AFE mains undervoltage
[Power Cons Warning]	PoWd	Power consumption warning
[Switch OutPres Warn]	oPSA	Outlet pressure high switch warning *(see page 397)*
[MP Capacity Warn]	nPCA	Multipump available capacity warning *(see page 262)*
[Lead Pump Warn]	nPLA	Lead pump not available warning *(see page 262)*
[High Level Warning]	LCHA	High level warning *(see page 290)*
[Low Level Warning]	LCLA	Low level warning *(see page 290)*
[Level Switch Warning]	LCWA	Level switch warning *(see page 290)*
[MonitorCircuit A Warn]	iWA	Monitoring circuit A warning *(see page 569)*
[MonitorCircuit B Warn]	iWb	Monitoring circuit B warning *(see page 571)*
[MonitorCircuit C Warn]	iWC	Monitoring circuit C warning *(see page 571)*
[MonitorCircuit D Warn]	iWd	Monitoring circuit D warning *(see page 572)*
[CabinetCircuit A Warn]	CWA	Cabinet circuit A warning *(see page 573)*
[CabinetCircuit B Warn]	CWb	Cabinet circuit B warning *(see page 573)*
[CabinetCircuit C Warn]	CWC	Cabinet circuit C warning *(see page 574)*
[MotorWinding A Warn]	tWA	Motor winding A warning *(see page 575)*
[MotorWinding B Warn]	tWb	Motor winding B warning *(see page 575)*
[MotorBearing A Warn]	tWC	Motor bearing A warning *(see page 576)*
[MotorBearing B Warn]	tWd	Motor bearing B warning *(see page 576)*
[Circuit Breaker Warn]	CbW	Circuit breaker warning *(see page 577)*
[Cab I/O 24V Warn]	P24C	Cabinet I/O 24V missing warning
[AFE Motor Limitation]	CLiM	AFE motor limitation *(see page 459)*
[AFE Generator Limitation]	CLiG	AFE regen limitation *(see page 459)*
[AFE Sensor thermal state]	tHSA	AFE thermal state warning

Setting	Code	Description
[AFE IGBT thermal state]	tHJA	AFE IGBT thermal warning
[Cabinet Fan Fdbck Warn]	FFCA	Cabinet fan feedback warning *(see page 566)*
[Cabinet Fan Counter Warn]	FCCA	Cabinet fan counter warning *(see page 566)*
[Cabinet Overheat Warn]	CHA	Cabinet overheat warning
[CMI Jumper Warn]	CMiJ	CMI jumper warning
[AFE Fan Counter Warn]	FCbA	AFE fan counter warning *(see page 566)*
[AFE Fan Fdbck Warn]	FFbA	AFE fan feedback warning *(see page 566)*
[M/P Device Warn]	MPdA	Multipump device warning *(see page 262)*
[Temp Sens AI2 Warn]	ts2A	Temperature sensor AI2 warning (open circuit)
[Temp Sens AI3 Warn]	ts3A	Temperature sensor AI3 warning (open circuit)
[Temp Sens AI4 Warn]	ts4A	Temperature sensor AI4 warning (open circuit)
[Temp Sens AI5 Warn]	ts5A	Temperature sensor AI5 warning (open circuit)
[Bypass Poc Warning 1]	byW1	Bypass Power Cell warning 1
[Bypass Poc Warning 2]	byW2	Bypass Power Cell warning 2

[Last Error] LFt

Last error which occurred.

Setting	Code / Value	Description
[No Error]	noF	No error detected
[EEPROM Control]	EEF1	Control EEPROM error *(see page 646)*
[Incorrect Configuration]	CFF	Invalid configuration at power-on *(see page 640)*
[Invalid Configuration]	CFi	Incorrect parameter configuration *(see page 641)*
[Modbus Com Interruption]	SLF1	Modbus local serial communication interruption *(see page 688)*
[Internal Link Error]	iLF	Internal communication interruption *(see page 655)*
[Fieldbus Com Interrupt]	CnF	Communication interruption on fieldbus module *(see page 643)*
[External Error]	EPF1	External error from digital input or fieldbus *(see page 647)*
[Overcurrent]	oCF	Over current error *(see page 677)*
[Precharge Capacitor]	CrF	Load relay error *(see page 644)*
[AI2 4-20mA loss]	LFF2	AI2 4-20 mA Loss *(see page 672)*
[Input Overheating]	iHF	Input Overheating error *(see page 654)*
[Drive Overheating]	oHF	Drive over heating error *(see page 678)*
[Motor Overload]	oLF	Motor overload error *(see page 679)*
[DC Bus Overvoltage]	obF	DC bus overvoltage *(see page 676)*
[Supply Mains Overvoltage]	oSF	Over supply error *(see page 681)*
[Single output phase loss]	oPF1	Motor 1-phase loss *(see page 679)*
[Input phase loss]	PHF	Main input 1-phase loss *(see page 684)*
[Supply Mains UnderV]	uSF	Under voltage error *(see page 699)*
[Motor short circuit]	SCF1	Motor short circuit error (hardware detection) *(see page 686)*
[Motor Overspeed]	SoF	Instability or driving load too high *(see page 690)*
[Autotuning Error]	tnF	Tune error *(see page 698)*
[Internal Error 1]	inF1	Unknown drive rating *(see page 656)*
[Internal Error 2]	inF2	Unknown or incompatible power board *(see page 656)*
[Internal Error 3]	inF3	Internal communication error *(see page 657)*
[Internal Error 4]	inF4	Internal data inconsistent *(see page 657)*
[EEPROM Power]	EEF2	Internal memory error *(see page 646)*
[Ground Short Circuit]	SCF3	Direct ground short-circuit error (hardware detection) *(see page 686)*

Setting	Code / Value	Description
[Output Phase Loss]	oPF2	Motor 3-phases loss *(see page 680)*
[CANopen Com Interrupt]	CoF	CANopen communication interruption *(see page 643)*
[Internal Error 7]	inF7	CPLD communication interruption *(see page 658)*
[Fieldbus Error]	EPF2	External error from fieldbus module *(see page 647)*
[Internal Error 8]	inF8	External error from fieldbus module *(see page 659)*
[PC Com Interruption]	SLF2	PC software communication interruption *(see page 689)*
[HMI Com Interruption]	SLF3	Graphic Display Terminal communication interruption *(see page 689)*
[Internal Error 9]	inF9	Current measurement circuit error *(see page 659)*
[Internal Error 10]	inFA	Customer supply error *(see page 660)*
[Internal Error 11]	inFb	Thermal sensor error *(see page 660)*
[IGBT Overheating]	tJF	IGBT over heating error *(see page 697)*
[IGBT Short Circuit]	SCF4	IGBT short-circuit error (hardware detection) *(see page 687)*
[Motor Short Circuit]	SCF5	Load short-circuit error during IGON test sequence (hardware detection) *(see page 687)*
[Internal Error 12]	inFC	Internal current supply error *(see page 661)*
[Input Contactor]	LCF	Line contactor error *(see page 670)*
[Internal Error 6]	inF6	Unknown or incompatible option module *(see page 658)*
[Internal Error 14]	inFE	CPU error (ram, flash, task ...) *(see page 662)*
[AI3 4-20mA loss]	LFF3	AI3 4-20 mA loss *(see page 673)*
[AI4 4-20mA loss]	LFF4	AI4 4-20 mA loss *(see page 673)*
[Boards Compatibility]	HCF	Hardware configuration error *(see page 651)*
[Conf Transfer Error]	CFi2	Configuration transfer error *(see page 641)*
[AI5 4-20 mA loss]	LFF5	AI5 4-20 mA loss *(see page 674)*
[Channel Switch Error]	C5F	Channel switching error *(see page 645)*
[Process Underload]	uLF	Underload error *(see page 698)*
[Process Overload]	oLC	Overload error *(see page 678)*
[Angle error]	A5F	Angle Setting error *(see page 638)*
[AI1 4-20 mA loss]	LFFI	AI1 4-20 mA loss *(see page 672)*
[Safety Function Error]	SAFF	Safety function error *(see page 685)*
[AI2 Th Error Level]	tH2F	Thermal error level for AI2 *(see page 695)*
[AI2 Thermal Sensor Error]	t2CF	Thermal sensor error on AI2 *(see page 691)*
[AI3 Th Error Level]	tH3F	Thermal error level for AI3 *(see page 695)*
[AI3 Thermal Sensor Error]	t3CF	Thermal sensor error on AI3 *(see page 691)*
[PumpCycle Start Error]	PCPF	Pumpcycle detected error *(see page 682)*
[Out Pressure Low]	oPLF	Outlet pressure low *(see page 681)*
[High Flow Error]	HFPF	High flow error *(see page 651)*
[Inlet Pressure Error]	iPPF	Inlet pressure detected error *(see page 669)*
[Pump Low Flow Error]	PLFF	Pump low flow detected error *(see page 685)*
[AI4 Th Error Level]	tH4F	Thermal error level for AI4 *(see page 696)*
[AI4 Thermal Sensor Error]	t4CF	Thermal sensor error on AI4 *(see page 692)*
[AI5 Th Error Level]	tH5F	Thermal error level for AI5 *(see page 696)*
[AI5 Thermal Sensor Error]	t5CF	Thermal sensor error on AI5 *(see page 692)*
[Anti Jam Error]	JAMF	Anti-Jam detected error *(see page 670)*
[Out Pressure High]	oPHF	Outlet pressure high *(see page 680)*
[Dry Run Error]	drYF	Dry run detected error *(see page 645)*
[PID Feedback Error]	PFMF	PID feedback detected error *(see page 683)*
[Program Loading Error]	PGLF	Program loading detected error *(see page 683)*

Setting	Code / Value	Description
[Program Running Error]	PGrF	Program running detected error *(see page 684)*
[Lead Pump Error]	nPLF	The selected lead pump is not available *(see page 676)*
[Low Level Error]	LCLF	The minimum level switch is active during emptying process *(see page 671)*
[High Level Error]	LCHF	The maximum level switch is active during filling process *(see page 671)*
[Internal Error 16]	inFG	Internal error 16 *(see page 663)*
[Internal Error 17]	inFH	Internal error 17 *(see page 663)*
[Internal Error 0]	inF0	Internal error 0 (IPC) *(see page 655)*
[Internal Error 13]	inFd	Internal error 13 (different current) *(see page 661)*
[Motor Stall Error]	StF	Motor stall detected error *(see page 690)*
[Internal Error 21]	inFL	Internal error 21 (RTC) *(see page 665)*
[Embd Eth Com Interrupt]	EtHF	Embedded Ethernet communication interruption *(see page 648)*
[Internal Error 15]	inFF	Internal error 15 (flash) *(see page 662)*
[Firmware Update Error]	FWEr	Firmware update error *(see page 650)*
[Internal Error 22]	inFn	Internal error 22 (embedded Ethernet) *(see page 665)*
[Internal Error 25]	inFP	Internal error 25 *(see page 666)*
[Internal Error 20]	inFK	Internal error 20 *(see page 664)*
[Internal Error 27]	inFr	Internal error 27 *(see page 667)*
[Internal Error 23]	inFn	Internal Error 17 (Module link) *(see page 666)*
[AFE ShortCircuit error]	SCFG	AFE ShortCircuit error *(see page 688)*
[AFE Bus unbalancing]	obF2	AFE Bus unbalancing *(see page 677)*
[Internal Error 28]	inF5	Internal error 28 (AFE) *(see page 667)*
[MonitorCircuit A Error]	iFA	Monitoring circuit A error *(see page 652)*
[MonitorCircuit B Error]	iFb	Monitoring circuit B error *(see page 653)*
[MonitorCircuit C Error]	iFC	Monitoring circuit C error *(see page 653)*
[MonitorCircuit D Error]	iFd	Monitoring circuit D error *(see page 654)*
[CabinetCircuit A Error]	CFA	Cabinet circuit A error *(see page 639)*
[CabinetCircuit B Error]	CFb	Cabinet circuit B error *(see page 639)*
[CabinetCircuit C Error]	CFC	Cabinet circuit C error *(see page 640)*
[MotorWinding A Error]	tFA	Motor winding A error *(see page 693)*
[MotorWinding B Error]	tFb	Motor winding B error *(see page 693)*
[MotorBearing A Error]	tFC	Motor bearing A error *(see page 694)*
[MotorBearing B Error]	tFd	Motor bearing B error *(see page 694)*
[Cabinet Overheat Error]	CHF	Cabinet overheat error *(see page 642)*
[AFE Mains Undervoltage]	urF	AFE mains undervoltage *(see page 699)*
[Internal Error 31]	inFV	Internal Error 31 (Missing brick) *(see page 669)*
[Internal Error 29]	inFt	Internal Error 29 (Inverter) *(see page 668)*
[Internal Error 30]	inFu	Internal Error 30 (Rectifier) *(see page 668)*
[AFE IGBT over-heat error]	tJF2	AFE IGBT over-heat error *(see page 697)*
[AFE contactor feedback error]	CrF3	AFE contactor feedback error *(see page 644)*
[Pre-settings Transfer Error]	CFi3	Pre-settings Transfer Error *(see page 642)*
[Circuit Breaker Error]	CbF	Circuit breaker error *(see page 638)*
[MultiDrive Link Error]	MdLF	Multidrive link error *(see page 674)*
[M/P Device Error]	MPdF	Multipump device error *(see page 675)*
[AFE Modulation Rate Error]	ACF1	AFE modulation rate error *(see page 637)*
[AFE Current Control Error]	ACF2	AFE current control error *(see page 637)*
[Mains Freq Out Of Range]	MFF	Mains frequency out of range *(see page 675)*
[FDR 1 Error]	Fdr1	Embedded Ethernet FDR error *(see page 649)*
[FDR 2 Error]	Fdr2	Ethernet fieldbus module FDR error *(see page 650)*

Setting	Code / Value	Description
[Cab I/O 24V Error]	P24C	Cabinet I/O 24V missing error *(see page 682)*
[Out Contact Closed Error]	FCF1	Output contactor closed error *(see page 648)*
[Out Contact Opened Error]	FCF2	Output contactor opened error *(see page 649)*
[Egy saving Exit Error]	idLF	Energy Saving Exit Error *(see page 652)*

[Identification Error] inF6 ★

Identification Error (inF6).

This parameter can be accessed if **[Last Error]** LFt is **[Identification Error]** inF6.

Setting	Description
0...12 (value in Hex.)	Value = 0x00 : No error detected Value = 0x01 : No response of the option module Value = 0x02 : Signature reception timeout Value = 0x03 : ACK reception timeout Value = 0x04 : Signature length Value = 0x05 : CheckSum Value = 0x06 : Unknown state Value = 0x07 : UART receive Value = 0x08 : Unknown protocol version Value = 0x09 : Unknown module type Value = 0x0A : More than 5 unsuccessful tries Value = 0x0B : Unknown module type Value = 0x0C : Option module not supported by the slot Value = 0x0D : Same option module in more than one slot Value = 0x0E : O1SV not received Value = 0x0F : O1SV option module software version not compatible Value = 0x10 : reserved Value = 0x11 : reserved Value = 0x12 : Control terminal module not present or not recognized **Factory setting**: –

[Nb Of Start] nSM

Number of motor starts (resettable).

Setting	Description
0...4,294,967,295	Setting range **Factory setting**: 0

[Motor Run Time] rtHH

Motor run time.

Run elapsed time display (resettable) in 0.1 hours (length of time the motor has been switched on).

Setting	Description
0.0...429,496,729.5 h	Setting range **Factory setting**: _

[Service message] SEr - Menu

Access

[Diagnostics] ➡ **[Diag. data]** ➡ **[Service message]**

About This Menu

This menu presents the service messages.

This is a user-defined service message configured in **[My preferences]** MYP ➡ **[Customization]** CUS ➡ **[Service messages]** SEr.

[Other State] 5 5 t - Menu

Access

[Diagnostics] ➡ [Diag. data] ➡ [Other State]

About This Menu

List of secondary states.

List

[Anti-Jam pending] J A n P

[Anti-Jam In Progress] J A n r

[PipeFill In Progress] F i L L

[InPres Comp Active] i P P C

[Sleep Active] 5 L n

[Priming pump running] P P o n

[Jockey pump running] J P o n

[Sleep Boost active] 5 L P b

[Sleep Check Active] A 5 L C

[Set 1 active] C F P 1

[Set 2 active] C F P 2

[Set 3 active] C F P 3

[Set 4 active] C F P 4

[Automatic restart] A u t o

[DC Bus Charged] d b L

[Fast stop Active] F 5 t

[Fallback Frequency] F r F

[Speed Maintained] r L 5

[Type of stop] 5 t t

[Ref Freq Warning] 5 r A

[Forward] n F r d

[Reverse] n r r 5

[Autotuning] t u n

[Diagnostics] dRu - Menu

Access

[Diagnostics] ➡ [Diag. data] ➡ [Diagnostics]

About This Menu

This menu allows to make simple test sequences for diagnostics.

[FAN Diagnostics] Fnt

Diagnostics of internal fan(s).

This will start a test sequence.

NOTE:
Fan diagnostics of internal fan(s) will be not-successful if the DC bus is not fully charged. This will be the case:

- on separate control (e.g. the control block is only supplied on 24V), or
- if the drive is in **[Energy saving]** idLE mode (e.g. Stop and go function is active).

[HMI LED Diagnostics] HLt

Diagnostics of product LED(s).

This will start a test sequence.

[IGBT Diag w motor] iWt

Diagnostics of product IGBT(s).

This will start a test sequence with the connected motor (open circuit/short-circuit).

[IGBT Diag w/o motor] iWot

Diagnostics of product IGBT(s).

This will start a test sequence without the motor (short-circuit).

[Identification] oid - Menu

Access

[Diagnostics] ➡ [Diag. data] ➡ [Identification]

About This Menu

This is a read-only menu that cannot be configured. It enables the following information to be displayed:

- Drive reference, power rating, and voltage
- Drive software version
- Drive serial number
- Type of option modules present, with their software version
- Graphic Display Terminal type and version

Section 6.2
[Error history] PFH - Menu

[Error history] PFH - Menu

Access

[Diagnostics] ➡ **[Error history]**

About This Menu

This menu shows the 15 last detected errors (dP1 to dPF).

Pressing OK key on the selected error code in the Error history list displays the drive data recorded when the error has been detected.

NOTE: Same content for **[Last Error 1]** dP1 to **[Last Error F]** dPF.

[Last Error 1] dP1

Last error 1.

Identical to **[Last Error]** LFt *(see page 75)*.

[Drive State] HS1

HMI status.

Identical to **[Drive State]** HMIS *(see page 60)*.

[Last Error 1 Status] EP1

Status of last error 1.

DRIVECOM status register (same as **[ETA state word]** ETA).

[ETI state word] IP1

ETI state word.

ETI status register (see the communication parameter file).

[Cmd word] CMP1

Cmd word.

Command register (same as **[Cmd word]** CMd).

[Motor current] LCP1

Motor current (same as **[Motor Current]** LCr).

Setting	Description
0...2*In (1)	Setting range **Factory setting**: _
(1) Corresponding to the rated drive current indicated in the installation manual and on the drive nameplate.	

[Output frequency] rFP1

Output frequency (same as **[Output frequency]** rFr).

Setting	Description
-3,276.7...3,276.7 Hz	Setting range **Factory setting**: _

[Elapsed Time] rtPI

Elapsed time.

Setting	Description
0...65,535 h	Setting range **Factory setting**: _

[DC bus voltage] uLPI

DC bus voltage (same as **[DC bus voltage]** uLPI).

Setting	Description
0...6,553.5 Vdc	Setting range: **[No meas.]** ---- is displayed if no value is measured. **Factory setting**: _

[Motor therm state] tHPI

Motor thermal state (same as **[Motor Therm state]** tHr).

Setting	Description
0...200%	Setting range **Factory setting**: _

[Command Channel] dCCI

Command channel (same as **[Command channel]** CMdC).

Setting	Code / Value	Description
[Terminals]	tEr	Terminal block
[Ref. Freq-Rmt.Term]	LCC	Graphic Display Terminal
[Modbus]	Mdb	Modbus serial
[CANopen]	CAn	CANopen
[Com. Module]	nEt	Fieldbus module
[Ethernet Module]	Eth	Embedded Ethernet
[PC tool]	PWS	DTM based commissioning software

[Ref Freq Channel] drCI

Channel for reference frequency (same as **[Ref Freq Channel]** rFCC).

Identical to **[Command channel]** dCCI *(see page 82)*.

[Motor Torque] otPI

Estimated motor torque value (same as **[Motor Torque]** otr).

NOTE: The displayed value is always positive in motor mode and negative in generator mode whatever the direction.

Setting	Description
-300...300%	Setting range **Factory setting**: _

[Drive Thermal State] tdPI

Measured drive thermal state (same as **[Drive Therm State]** tHd).

Setting	Description
0...200%	Setting range **Factory setting**: _

[IGBT Junction Temp] tJPI

Estimated junction temperature value.

Setting	Description
0...255°C	Setting range **Factory setting**: _

[Switching Frequency] SFPI

Switching frequency applied (related to **[Switching Frequency]** SFr).

Setting	Description
0...65,535 Hz	Setting range **Factory setting**: _

[Power Brick Error ID] bPEI

Power Brick error ID

The value displayed is the bit number of the brick with actual error, starting with number 1 on the right side.

Setting	Description
0...255	Setting range **Factory setting**: _

[AFE Power brick error ID] bFEI

Active Front End brick error ID

The value displayed is the bit number of the brick with actual error, starting with number 1 on the right side.

Setting	Description
0...65535	Setting range **Factory setting**: _

[Last Error 2] dP2 to [Last Error F] dPF

Last error 2... Last error F

Identical to **[Last Error1]** dP1 *(see page 81)*.

Section 6.3
[Warnings] AL r - Menu

What Is in This Section?

This section contains the following topics:

Topic	Page
[Actual warnings] AL rd - Menu	85
[Warning group 1 definition] A 1C - Menu	85
[Warning group 2 definition] A2C - Menu	85
[Warning group 3 definition] A3C - Menu	85
[Warning group 4 definition] A4C - Menu	85
[Warning group 5 definition] A5C - Menu	86
[Warnings] AL r - Menu	86

[Actual warnings] AL r d - Menu

Access

[Diagnostics] ➞ [Warnings] ➞ [Actual warnings]

About This Menu

List of current warnings.

If a warning is active, ✓ and ! appears on the Graphic Display Terminal.

List of Available Warnings

Identical to **[Last warning]** LALr *(see page 73)*.

[Warning group 1 definition] A 1C - Menu

Access

[Diagnostics] ➞ [Warnings] ➞ [Warning group 1 definition]

About This Menu

The following submenus group the warnings into 1 to 5 groups, each of which can be assigned to a relay or a digital output for remote signaling.

When one or a number of warnings selected in a group occurs, this warning group is activated.

List of Warnings

Identical to **[Last warning]** LALr *(see page 73)*.

[Warning group 2 definition] A2C - Menu

Access

[Diagnostics] ➞ [Warnings] ➞ [Warning group 2 definition]

About This Menu

Identical to **[Warning group 1 definition]** A 1C *(see page 85)*

[Warning group 3 definition] A3C - Menu

Access

[Diagnostics] ➞ [Warnings] ➞ [Warning group 3 definition]

About This Menu

Identical to **[Warning group 1 definition]** A 1C *(see page 85)*

[Warning group 4 definition] A4C - Menu

Access

[Diagnostics] ➞ [Warnings] ➞ [Warning group 4 definition]

About This Menu

Identical to **[Warning group 1 definition]** A 1C *(see page 85)*

[Warning group 5 definition] A 5 C - Menu

Access

[Diagnostics] ➞ [Warnings] ➞ [Warning group 5 definition]

About This Menu

Identical to **[Warning group 1 definition]** A 1 C *(see page 85)*

[Warnings] A L r - Menu

Access

[Diagnostics] ➞ [Warnings]

About This Menu

This menu presents the warning history (30 past warnings).

[Warning History] A L H

Identical to **[Last warning]** L A L r *(see page 73)*.

Chapter 7
[Display] Mon -

Introduction

[Display] *Mon* **-** menu shows monitoring data related to the drive and the application.

It offers an application-oriented display in terms of energy, cost, cycle, efficiency, ...

This is available with customized units and graphics view.

What Is in This Chapter?

This chapter contains the following sections:

Section	Topic	Page
7.1	**[Energy parameters]**	88
7.2	**[Application parameters]**	95
7.3	**[Pump parameters]**	99
7.4	**[Motor parameters]**	109
7.5	**[Drive parameters]**	111
7.6	**[Thermal monitoring]**	115
7.7	**[PID display]**	116
7.8	**[Counter management]**	117
7.9	**[Other state]**	120
7.10	**[I/O map]**	121
7.11	**[Communication map]**	138
7.12	**[Data logging]**	158

Section 7.1
[Energy parameters]

What Is in This Section?

This section contains the following topics:

Topic	Page
[Elec Ener Input Counter] *E L ı* - Menu	89
[Elec Ener Output Counter] *E L o* - Menu	90
[Mechanical energy] *П E C* - Menu	92
[Energy saving] *E S A* - Menu	94

[Elec Ener Input Counter] E L ı - Menu

Access

[Display] ➡ [Energy parameters] ➡ [Elec Ener Input Counter]

About This Menu

This menu presents the input electrical energy data.

NOTE: On Altivar Process range, except for ATV680 and ATV6B0 products, the power and energy parameters are estimated based on the output current of the drive. For ATV680 and ATV6B0 products, the power and energy parameters are measured.

[Active Input Power] ı P r W

Active electrical input power.

Setting	Description
According to the drive rating	Setting range in kW if **[Motor Standard]** b F r is set to **[50Hz IEC]** 5 0 or in HP if **[Motor Standard]** b F r is set to **[60Hz NEMA]** 6 0 **Factory setting**: _

[Input Reactive Power] ı 9 r W

Reactive electrical input power.

This parameter can be accessed on ATV680 and ATV6B0

Setting	Description
According to the drive rating	Setting range in kW if **[Motor Standard]** b F r is set to **[50Hz IEC]** 5 0 or in HP if **[Motor Standard]** b F r is set to **[60Hz NEMA]** 6 0 **Factory setting**: _

[Input Power Factor] P W F

Mains input power factor.

This parameter can be accessed on ATV680 and ATV6B0

Setting	Description
According to the drive rating	Setting range displayed as a percentage **Factory setting**: _

[Real Input Energy] ı E 4 ★

Input electrical power consumed (TWh).

This parameter can be accessed if **[Real Input Energy]** ı E 4 is not set to 0.

Setting	Description
-999...999 TWh	Setting range **Factory setting**: _

[Real Input Energy)] ı E 3 ★

Input electrical power consumed (GWh).

Setting	Description
-999...999 GWh	Setting range **Factory setting**: _

[Real Input Energy] iE2 ★

Input electrical power consumed (MWh).

Setting	Description
-999...999 MWh	Setting range **Factory setting**: _

[Real Input Energy] iE1 ★

Input electrical power consumed (kWh).

Setting	Description
-999...999 kWh	Setting range **Factory setting**: _

[Real Input Energy] iE0 ★

Input electrical power consumed (Wh).

Setting	Description
-999...999 Wh	Setting range **Factory setting**: _

[Elec Ener Output Counter] ELo - Menu

Access

[Display] ➡ [Dashboard Energy] ➡ [Energy parameters] ➡ [Elec Ener Output Counter]

About This Menu

This menu presents the output electrical energy data.

[Acv Elc out pwr estm] EPrW

Active electrical output power estimation.

Setting	Description
According to the drive rating	Setting range in kW if **[Motor Standard]** bFr is set to **[50Hz IEC]** 50 or in HP if **[Motor Standard]** bFr is set to **[60Hz NEMA]** 60 **Factory setting**: _

[Real Consumption] oE4 ★

Electrical energy consumed (TWh).

This parameter can be accessed if **[Real Consumption]** oE4 is not set to 0.

Setting	Description
-999...999 TWh	Setting range **Factory setting**: _

[Real Consumption] oE3

Electrical energy consumed (GWh).

Setting	Description
-999...999 GWh	Setting range **Factory setting**: _

[Real Consumption] oE2

Electrical energy consumed (MWh).

Setting	Description
-999...999 MWh	Setting range **Factory setting**: _

[Real Consumption] oE1

Electrical energy consumed (kWh).

Setting	Description
-999...999 kWh	Setting range **Factory setting**: _

[Real Consumption] oE0

Electrical energy consumed (Wh).

Setting	Description
-999...999 Wh	Setting range **Factory setting**: _

[Elc Egy Today] oCt

Electrical energy consumed today by the motor (kWh).

Setting	Description
0...4,294,967,295 kWh	Setting range **Factory setting**: _

[Elc Egy Yesterday] oCY

Electrical energy consumed yesterday by the motor (kWh).

Setting	Description
0...4,294,967,295 kWh	Setting range **Factory setting**: _

[Over-Consumption Thd] PCAH

Power level for over-consumption.

Setting	Description
[Under-Consumption Thd] PCAL ...200.0%	Setting range **Factory setting**: 0.0%

[Under-Consumption Thd] PCAL

Power level for under-consumption.

Maximum value = PCAH if PCAH ≤ 100%.

Setting	Description
0.0...100.0% or **[Over-Consumption Thd]** PCAH if PCAH ≤ 100%	Setting range **Factory setting**: 0.0%

[Over/Under-Cons Delay] PCAt

Over/under-consumption detection time.

Setting	Description
0...60 min	Setting range **Factory setting**: 1 min

[Peak Output Power] nOEP

Peak output power.

Setting	Description
According to the drive rating	Setting range **Factory setting**: _

[Mechanical energy] nEC - Menu

Access

[Display] ➞ [Dashboard Energy] ➞ [Energy parameters] ➞ [Mechanical energy]

About This Menu

This menu presents the output mechanical energy data.

[Power Estim Value] oPrW

Motor shaft power estimation.

Setting	Description
According to the drive rating	Setting range in kW if **[Motor Standard]** bFr is set to **[50Hz IEC]** 50 or in HP if **[Motor Standard]** bFr is set to **[60Hz NEMA]** 60 **Factory setting**: _

[Motor Consumption] nEH ★

Energy consumption (TWh).

This parameter can be accessed if **[Motor Consumption]** nEH is not set to 0.

Setting	Description
0...999 TWh	Setting range **Factory setting**: _

[Motor Consumption] nE3 ★

Energy consumption (GWh).

Setting	Description
0...999 GWh	Setting range **Factory setting**: _

[Motor Consumption] nE2 ★

Energy consumption (MWh).

Setting	Description
0...999 MWh	Setting range **Factory setting**: _

[Motor Consumption] ΠE I ★

Energy consumption (kWh).

Setting	Description
0...999 kWh	Setting range **Factory setting**: _

[Motor Consumption] ΠE D ★

Energy consumption (Wh).

Setting	Description
0...999 Wh	Setting range **Factory setting**: _

[Energy saving] E S A - Menu

Access

[Display] ➡ [Dashboard Energy] ➡ [Energy parameters] ➡ [Energy saving]

About This Menu

This menu presents the comparison in term of cost, energy, CO_2 between solutions with and without drive.

[Reference Power] P r E F

Reference Power without drive

Setting	Description
0.00...655.35 kW	Setting range in kW if **[Motor Standard]** b F r is set to **[50Hz IEC]** 5 0 or in HP if **[Motor Standard]** b F r is set to **[60Hz NEMA]** 6 0. **Factory setting**: 0.00 kW

[kWh Cost] E C S t

Cost of the kWh.

Setting	Description
0.00...655.35 $	Setting range in € if **[Motor Standard]** b F r is set to **[50 Hz IEC]** 5 0 or in $ if **[Motor Standard]** b F r is set to **[60Hz NEMA]** 6 0. **Factory setting**: _

[CO2 Ratio] E C o 2

Quantity of CO_2 by kWh.

Setting	Description
0.000...65.535 kg/kWh	Setting range **Factory setting**: 0.000 kg/kWh

[Energy Saved] E S A V

Energy saved with the drive solution.

Setting	Description
0...4,294,967,295 kWh	Setting range **Factory setting**: _

[Money Saved] C A S H

Cost saved with the drive solution.

Setting	Description
0.00...42,949,672 $	Setting range in € if **[Motor Standard]** b F r is set to **[50 Hz IEC]** 5 0 or in $ if **[Motor Standard]** b F r is set to **[60 Hz NEMA]** 6 0. **Factory setting**: _

[Co2 Saved] C o 2 S

CO_2 saved with the drive solution.

Setting	Description
0.0...429,496,729.5 t	Setting range **Factory setting**: _

Section 7.2
[Application parameters]

[Application parameters] APr - Menu

Access

[Display] ➡ **[Application parameters]**

About This Menu

This menu displays information related to the application.

[System App State] APSS

System application state

This parameter indicates the installation application state

This parameter can be accessed if **[Pump System Archi]** MPSA is set to **[Multi Drives]** nVSd or **[Multi Masters]** nVSdr

Setting	Code / Value	Description
[Running]	run	No application function in progress; the drive is running
[Stop]	StoP	No application function in progress; the drive is not running
[Manual Mode Active]	MAnu	Motor running; manual PID mode is active
[PID Active]	Auto	Motor running; auto PID mode is active
[Flow Limit In Progress]	FL iM	The flow limitation is in progress
[PipeFill In Progress]	F iLL	The pipe fill is in progress
[Jockey Pump Active]	JoCKEY	The jockey pump is active
[Boost In progress]	booSt	The boost is in progress
[Sleep Active]	SLEEP	The sleep is active
[Priming Pump Active]	Pr iM	The priming pump is active
[InletPres Comp In Progress]	CoMP	The inlet pressure compensation is in progress

[Application State] APPS

Application state.

This parameter indicates the drive application state.

Setting	Code / Value	Description
[Running]	run	No application function in progress; the drive is running
[Stop]	StoP	No application function in progress; the drive is not running
[Local Mode Active]	LoCAL	Forced local mode activated
[Channel 2 Active]	oVEr	Override speed control mode activated
[Manual Mode Active]	MAnu	Motor running; manual PID mode is active
[PID Active]	Auto	Motor running; auto PID mode is active
[Antijam In Progress]	AJAM	The Anti-jam is in progress

Setting	Code / Value	Description
[Flow Limit In Progress]	FL iN	The flow limitation is in progress
[PipeFill In Progress]	F iLL	The pipe fill is in progress
[Jockey Pump Active]	JoCKEY	The jockey pump is active
[Boost In progress]	boo5t	The boost is in progress
[Sleep Active]	SLEEP	The sleep is active
[Priming Pump Active]	Pr iN	The priming pump is active
[InletPres Comp In Progress]	CoMP	The inlet pressure compensation is in progress

[Booster Status] bCS ★

Booster status.

This parameter can be accessed if **[Application Selection]** APPt is set to **[Pump Booster Control]** boo5t.

Setting	Code / Value	Description
[None]	nonE	Not configured
[Inactive]	nAct	Inactive
[Running]	run	Running
[Stage Pending]	5tGP	Stage pending
[Destage Pending]	d5tGP	Destage pending
[Staging]	5tG	Staging in progress
[Destaging]	d5tG	Destage in progress

[LevelCtrl Status] LCS ★

Level control status.

This parameter can be accessed if **[Application Selection]** APPt is set to **[Pump Level Control]** LEVEL.

Setting	Code / Value	Description
[None]	nonE	Not configured
[Inactive]	nAct	Inactive
[Filling]	F iLL	Filling in progress
[Emptying]	EMPtY	Emptying in progress
[Low Level]	LoW	Low level
[High Level]	h iGh	High level

[Tank Level] LCtL ★

Tank level.

This parameter can be accessed if **[Application Selection]** APPt is set to **[Pump Level Control]** LEVEL.

Setting	Description
0.0...100.0%	Setting range **Factory setting: –**

[Level Sensor Value] LCSV ★

Level sensor value.

This parameter can be accessed if **[Level Sensor Assign]** LcSA is not set to **[Not configured]** no.

Setting	Description
-327.67...327.67	Setting range **Factory setting: –**

[PID Reference] rPC ★

PID reference.

This parameter can be accessed if **[PID Feedback]** PiF is not set to **[Not Configured]** no.

Setting	Description
0...65,535%	Setting range **Factory setting: –**

[PID feedback] rPF ★

PID feedback.

This parameter can be accessed if **[PID Feedback]** PiF is not set to **[Not Configured]** no.

Setting	Description
0...65,535%	Setting range **Factory setting: –**

[Installation Flow] FSIV

Flow rate sensor value.

This parameter can be accessed if **[Inst. Flow Assign.]** FSIA is not set to **[Not Configured]** no.

Setting	Description
-32,767...32,767	Setting range according to **[Flow rate unit]** SuFr **Factory setting: –**

[Inlet Press. Value] PSIV

Inlet pressure value.

This parameter can be accessed if **[InletPres Assign]** PSIA is not set to **[Not Configured]** no.

Setting	Description
-32,767...32,767	Setting range according to **[P sensor unit]** SuPr **Factory setting: –**

[Outlet Pressure] PS2V

Outlet pressure value.

This parameter can be accessed if **[OutletPres Assign]** PS2A is not set to **[Not Configured]** no.

Setting	Description
-32,767...32,767	Setting range according to **[P sensor unit]** SuPr **Factory setting: –**

[Total Quantity] F S I C

Total quantity.

This parameter can be accessed if **[Inst. Flow Assign.]** F S I A is not set to **[Not Configured]** n o.

Setting	Description
-2,147,483,647...2,147,483,647	Setting range according to **[Flow rate unit]** S u F r **Factory setting: –**

[Highest Flow] F S I K

Highest flow.

This parameter can be accessed if **[Inst. Flow Assign.]** F S I A is not set to **[Not Configured]** n o.

Setting	Description
-32,767...32,767	Setting range according to **[Flow rate unit]** S u F r **Factory setting: –**

[Lowest Flow] F S I J

Lowest flow.

This parameter can be accessed if **[Inst. Flow Assign.]** F S I A is not set to **[Not Configured]** n o.

Setting	Description
-32,767...32,767	Setting range according to **[Flow rate unit]** S u F r **Factory setting: –**

Section 7.3
[Pump parameters]

What Is in This Section?

This section contains the following topics:

Topic	Page
[Variable speed pump] *ΠPP* - Menu	100
[Multipump system] *ΠPS* - Menu	103
[Installation] *ΠPV S* - Menu	108

[Variable speed pump] PPP - Menu

Access

[Display] ➡ [Pump parameters] ➡ [Variable speed pump]

About This Menu

This menu shows the pump-related parameters.

[Motor Run Time] rtHH

Motor run time.

Run elapsed time display (resettable) in 0.1 hours (length of time the motor has been switched on).

Setting	Description
0.0...429,496,729.5 h	Setting range **Factory setting**: _

[Motor Mechanical speed] SPdM

Motor mechanical speed.

This parameter displays the estimated rotor speed with motor slip.

Setting	Description
0...65,535 rpm	Setting range **Factory setting**: _

[Nb Of Start] nSM

Number of motor starts (resettable).

Setting	Description
0...4,294,967,295	Setting range **Factory setting**: _

[Acv Elc Out Pwr Estm] EPrW

Active electrical output power estimation.

Setting	Description
-327.67...327.67 kW	Setting range in kW if **[Motor Standard]** bFr is set to **[50 Hz IEC]** 50 or in HP if **[Motor Standard]** bFr is set to **[60 Hz NEMA]** 60 **Factory setting**: _

[Pump Flow] FS2V ★

Pump flow value.

This parameter can be accessed if **[Pump Flow Assign.]** FS2A is not set to **[Not Configured]** no.

Setting	Description
-32,767...32,767	Setting range according to **[Flow rate unit]** SuFr. **Factory setting: –**

[Flow Estimated] SLFV ★

Estimated flow value.

This parameter can be accessed if **[Flow Estimation Mode]** FEM is not set to **[No]** no.

Setting	Description
-32,767...32,767	Setting range according to **[Flow rate unit]** SUFr **Factory setting: –**

[Inlet Press. Value] PS IV ★

Inlet pressure value.

This parameter can be accessed if **[InletPres Assign]** PS IA is not set to **[Not Configured]** no.

Setting	Description
-32,767...32,767	Setting range according to **[P sensor unit]** SUPr **Factory setting: –**

[Outlet Pressure] PS2V ★

Outlet pressure.

This parameter can be accessed if **[OutletPres Assign]** PS2A is not set to **[Not Configured]** no.

Setting	Description
-32,767...32,767	Setting range according to **[P sensor unit]** SUPr **Factory setting: –**

[Est. Pump Head] SLHV ★

Estimated Pump head value

This parameter can be accessed if **[OutletPres Assign]** PS2A is not set to **[Not Configured]** no.

Setting	Description
-32,767...32,767	Setting range according to **[P sensor unit]** SUPr **Factory setting: –**

[Est. Pump dP] SLdP ★

Estimated Pump delta pressure value

This parameter can be accessed if **[OutletPres Assign]** PS2A is not set to **[Not Configured]** no.

Setting	Description
-32,767...32,767	Setting range according to **[P sensor unit]** SUPr **Factory setting: –**

[Efficiency] EFY

The efficiency is based on mechanical power.

Setting	Description
0.0...100.0 %	Setting range **Factory setting**: _

[Energy Cons. Ind.] *E C ,*

Energy consumption indication is based on the consumption of the electrical power

Setting	Description
-32,767...32,767	Setting range **Factory setting: –**

[Energy Perf. Ind] *E P ,*

Energy performance indicator is based on the electrical power

Setting	Description
-32,767...32,767	Setting range **Factory setting: –**

[Highest Eff.] *E F Y K*

Highest efficiency.

Setting	Description
0.0...100.0 %	Setting range **Factory setting**: _

[Lowest Eff.] *E F Y J*

Lowest efficiency.

Setting	Description
0.0...100.0 %	Setting range **Factory setting**: _

[Multipump system] MPS - Menu

Access

[Display] ➡ [Pump parameters] ➡ [Multipump system]

About This Menu

This menu can be accessed if **[Pump System Archit]** MPSA is not set to **[No]** no.

[MultiPump State] MPS

Multipump function state.

Setting	Code / Value	Description
[None]	noneE	None
[Ready]	rEAdY	Ready
[Running]	run	Running
[Warning]	ALArn	Warning
[Error]	FAuLt	Error
[Not Available]	nAVL	Not available

[Active Master ID] MM id

Active master ID.

This parameter can be accessed if **[Pump System Archi]** MPSA is set to **[Multi Masters]** nVSdr.

Setting	Code / Value	Description
[None]	noneE	No pump active.
[Pump 1]	P01	Pump 1.
[Pump 2]	P02	Pump 2.
[Pump 3]	P03	Pump 3.
[Pump 4]	P04	Pump 4.
[Pump 5]	P05	Pump 5.
[Pump 6]	P06	Pump 6.

[Available Pumps] MPAn

Number of available pumps.

Setting	Description
0...65,535	Setting range **Factory setting: –**

[Nb of Staged Pumps] MPSn

Number of staged pumps.

Setting	Description
0...65,535	Setting range **Factory setting: –**

[Lead Pump] PL id

Lead pump.

Setting	Code / Value	Description
[None]	nonE	None
[Pump 1]	P01	Pump number 1
[Pump 2]	P02	Pump number 2
[Pump 3]	P03	Pump number 3
[Pump 4]	P04	Pump number 4
[Pump 5]	P05	Pump number 5
[Pump 6]	P06	Pump number 6

[Next Staged Pump] Pnt S

Next pump to stage.

Identical to **[Lead Pump]** PL id *(see page 104)*.

[Next Destaged Pump] Pnt d

Next pump to destage.

Identical to **[Lead Pump]** PL id *(see page 104)*.

[Pump 1 State] P1S ★

Pump 1 state.

This parameter can be accessed if **[Nb Of Pumps]** nPPn or **[Nb of Devices]** nPGn is set to 1 or higher.

Setting	Code / Value	Description
[None]	nonE	Not configured
[Not Available]	nAuL	Unavailable
[Ready]	rdY	Ready
[Running]	run	Running

[Pump 1 Type] P1t ★

Pump 1 type.

This parameter can be accessed if **[Nb Of Pumps]** nPPn or **[Nb of Devices]** nPGn is set to 1 or higher.

Setting	Code / Value	Description
[None]	nonE	Undefined
[Lead]	LEAd	Lead pump
[Lead or Auxiliary]	LAF	Lead or auxiliary fixed speed pump
[Lead or Auxiliary Variable]	LAV	Lead or auxiliary variable speed pump
[Auxiliary]	AuXF	Auxiliary fixed speed pump
[Auxiliary Variable]	AuXV	Auxiliary variable speed pump
[Error]	Err	Error

[Pump 1 Runtime] P1rt ★

Pump 1 running time.

This parameter can be accessed if **[Nb Of Pumps]** nPPn or **[Nb of Devices]** nPGn is set to 1 or higher.

Setting	Description
0...4,294,967,295 s	Setting range **Factory setting: –**

[Pump 1 Nb Starts] P 1 n 5 ★

Pump 1 number of starts.

This parameter can be accessed if **[Nb Of Pumps]** n P P n or **[Nb of Devices]** n P G n is set to 1 or higher.

Setting	Description
0...4,294,967,295 s	Setting range **Factory setting: –**

[Pump 2 State] P 2 S ★

Pump 2 state.

This parameter can be accessed if **[Nb Of Pumps]** n P P n or **[Nb of Devices]** n P G n is set to 2 or higher.

Identical to **[Pump 1 State]** P 1 S *(see page 104)*.

[Pump 2 Type] P 2 t ★

Pump 2 type.

This parameter can be accessed if **[Nb Of Pumps]** n P P n or **[Nb of Devices]** n P G n is set to 2 or higher.

Identical to **[Pump 1 Type]** P 1 t *(see page 104)*.

[Pump 2 Runtime] P 2 o t ★

Pump 2 running time.

This parameter can be accessed if **[Nb Of Pumps]** n P P n or **[Nb of Devices]** n P G n is set to 2 or higher.

Identical to **[Pump 1 Runtime]** P 1 o t *(see page 104)*.

[Pump 2 Nb Starts] P 2 n 5 ★

Pump 2 number of starts.

This parameter can be accessed if **[Nb Of Pumps]** n P P n or **[Nb of Devices]** n P G n is set to 2 or higher.

Identical to **[Pump 1 Nb Starts]** P 1 n 5 *(see page 105)*.

[Pump 3 State] P 3 S ★

Pump 3 state.

This parameter can be accessed if **[Nb Of Pumps]** n P P n or **[Nb of Devices]** n P G n is set to 3 or higher.

Identical to **[Pump 1 State]** P 1 S *(see page 104)*.

[Pump 3 Type] P 3 t ★

Pump 3 type.

This parameter can be accessed if **[Nb Of Pumps]** n P P n or **[Nb of Devices]** n P G n is set to 3 or higher.

Identical to **[Pump 1 Type]** P 1 t *(see page 104)*.

[Pump 3 Runtime] P 3 o t ★

Pump 3 running time.

This parameter can be accessed if **[Nb Of Pumps]** n P P n or **[Nb of Devices]** n P G n is set to 3 or higher.

Identical to **[Pump 1 Runtime]** P 1 o t *(see page 104)*.

[Pump 3 Nb Starts] P 3 n 5 ★

Pump 3 number of starts.

This parameter can be accessed if **[Nb Of Pumps]** n P P n or **[Nb of Devices]** n P G n is set to 3 or higher.

Identical to **[Pump 1 Nb Starts]** P 1 n 5 *(see page 105)*.

[Pump 4 State] *P 4 S* ★

Pump 4 state.

This parameter can be accessed if **[Nb Of Pumps]** *n P P n* or **[Nb of Devices]** *n P G n* is set to 4 or higher.

Identical to **[Pump 1 State]** *P 1 S* *(see page 104)*.

[Pump 4 Type] *P 4 t* ★

Pump 4 type.

This parameter can be accessed if **[Nb Of Pumps]** *n P P n* or **[Nb of Devices]** *n P G n* is set to 4 or higher.

Identical to **[Pump 1 Type]** *P 1 t* *(see page 104)*.

[Pump 4 Runtime] *P 4 o t* ★

Pump 4 running time.

This parameter can be accessed if **[Nb Of Pumps]** *n P P n* or **[Nb of Devices]** *n P G n* is set to 4 or higher.

Identical to **[Pump 1 Runtime]** *P 1 o t* *(see page 104)*.

[Pump 4 Nb Starts] *P 4 n S* ★

Pump 4 number of starts.

This parameter can be accessed if **[Nb Of Pumps]** *n P P n* or **[Nb of Devices]** *n P G n* is set to 4 or higher.

Identical to **[Pump 1 Nb Starts]** *P 1 n S* *(see page 105)*.

[Pump 5 State] *P 5 S* ★

Pump 5 state.

This parameter can be accessed if **[Nb Of Pumps]** *n P P n* or **[Nb of Devices]** *n P G n* is set to 5 or higher.

Identical to **[Pump 1 State]** *P 1 S* *(see page 104)*.

[Pump 5 Type] *P 5 t* ★

Pump 5 type.

This parameter can be accessed if **[Nb Of Pumps]** *n P P n* or **[Nb of Devices]** *n P G n* is set to 5 or higher.

Identical to **[Pump 1 Type]** *P 1 t* *(see page 104)*.

[Pump 5 Runtime] *P 5 o t* ★

Pump 5 running time.

This parameter can be accessed if **[Nb Of Pumps]** *n P P n* or **[Nb of Devices]** *n P G n* is set to 5 or higher.

Identical to **[Pump 1 Runtime]** *P 1 o t* *(see page 104)*.

[Pump 5 Nb Starts] *P 5 n S* ★

Pump 5 number of starts.

This parameter can be accessed if **[Nb Of Pumps]** *n P P n* or **[Nb of Devices]** *n P G n* is set to 5 or higher.

Identical to **[Pump 1 Nb Starts]** *P 1 n S* *(see page 105)*.

[Pump 6 State] *P 6 S* ★

Pump 6 state.

This parameter can be accessed if **[Nb Of Pumps]** *n P P n* or **[Nb of Devices]** *n P G n* is set to 6.

Identical to **[Pump 1 State]** *P 1 S* *(see page 104)*.

[Pump 6 Type] P 6 t ★

Pump 6 type.

This parameter can be accessed if **[Nb Of Pumps]** n P P n or **[Nb of Devices]** n P G n is set to 6.

Identical to **[Pump 1 Type]** P 1 t *(see page 104)*.

[Pump 6 Runtime] P 6 o t ★

Pump 6 running time.

This parameter can be accessed if **[Nb Of Pumps]** n P P n or **[Nb of Devices]** n P G n is set to 6.

Identical to **[Pump 1 Runtime]** P 1 o t *(see page 104)*.

[Pump 6 Nb Starts] P 6 n 5 ★

Pump 6 number of starts.

This parameter can be accessed if **[Nb Of Pumps]** n P P n or **[Nb of Devices]** n P G n is set to 6.

Identical to **[Pump 1 Nb Starts]** P 1 n 5 *(see page 105)*.

[Installation] MPVS - Menu

Access

[Display] ➡ [Pump parameters] ➡ [Installation]

About This Menu

This menu can be accessed if **[Pump System Archit]** MPSA is set to **[Multi Drives]** nVSd or **[Multi Masters]** nVSdr.

[Sys Electrical Power] EPrS

Pump system electrical power

Setting	Description
-327.67...327.67 kW	Setting range in kW if **[Motor Standard]** bFr is set to **[50 Hz IEC]** 50 or in HP if **[Motor Standard]** bFr is set to **[60 Hz NEMA]** 60. **Factory setting**: _

[Sys Flow] SLFS

Pump system flow

Setting	Description
-32,767...32,767	Setting range according to **[Flow rate unit]** SuFr. **Factory setting: –**

[Sys Delta Pressure] SLdS

Pump system delta pressure

Setting	Description
-32,767...32,767	Setting range according to **[Flow rate unit]** SuFr. **Factory setting: –**

[Sys Efficiency Ind] EFYS

Pump system efficiency indicator

Setting	Description
0.0...100.0 %	Setting range **Factory setting: –**

[Sys Energy Cons Ind] ECiS

Pump system energy consumption indicator

Setting	Description
0...32,767	Setting range **Factory setting: –**

[Sys Performance Ind] EPiS

Pump system performance indicator

Setting	Description
0...32,767	Setting range **Factory setting: –**

Section 7.4
[Motor parameters]

[Motor parameters] MMo - Menu

Access

[Display] ➡ [Motor parameters]

About This Menu

This menu shows the motor-related parameters.

[Motor Speed] SPd

Motor speed.

This parameter displays the estimated rotor speed without motor slip.

Setting	Description
0...65,535 rpm	Setting range **Factory setting**:–

[Signed Mech Speed] SPd I

Signed motor mechanical speed.

Setting	Description
-100,000...100,000 rpm	Setting range **Factory setting**:–

[Motor Voltage] uoP

Motor voltage.

Setting	Description
0...65,535 V	Setting range **Factory setting**:–

[Motor Power] oPr

Motor power.

Output power in % (100% = nominal motor power).

Setting	Description
-300...300%	Setting range **Factory setting**: –

[Nom Motor Torque] tqn

Computed nominal motor torque in Nm (+/- 2% tolerance).

Setting	Description
0.01...65,535 Nm	Setting range according to drive rating. **Factory setting**: –

[Motor Torque] ɔtr

Motor torque.

Output torque value (100% = **[Nom Motor Torque]** tqn).

NOTE: The displayed value is always positive in motor mode and negative in generator mode whatever the direction.

Setting	Description
-300.0... 300.0%	Setting range **Factory setting**: –

[Motor Torque (Nm)] ɔtqn

Motor torque (Nm).

Output torque value.

NOTE: The displayed value is always positive in motor mode and negative in generator mode whatever the direction.

Setting	Description
-32,767 Nm...32,767 Nm	Setting range: according to drive ratings **Factory setting**: –

[Motor Current] LCr

Motor current.

Setting	Description
0.00...65,535 A	Setting range according to drive ratings **Factory setting**: –

[Motor Therm state] tHr

Motor thermal state.

The normal motor thermal state is 100%, the **[Motor Overload]** ɔLF is set to 118%.

Setting	Description
0...200%	Setting range **Factory setting**: –

Section 7.5
[Drive parameters]

[Drive parameters] dPI- Menu

Access

[Display] ➡ **[Drive parameters]**

About This Menu

This menu shows the drive-related parameters.

[AIV1 Image input] AIV1

AIV1 Image input.

This parameter is read-only. It enables to display the speed reference applied to the motor, or the sensor value, via the fieldbus channel.

Setting	Description
-10,000...10,000 (1)	Setting range **Factory setting**: –
1): range according to **[AIV1 Type]** AIV1t.	

[AIV2 Image input] AIV2

AIV2 Image input.

This parameter is read-only. It enables to display the speed reference applied to the motor, or the sensor value, via the fieldbus channel.

Setting	Description
-10,000...10,000 (1)	Setting range **Factory setting**: –
1): range according to **[AIV2 Type]** AIV2t.	

[AIV3 Image input] AIV3

AIV3 Image input.

This parameter is read-only. It enables to display the speed reference applied to the motor, or the sensor value, via the fieldbus channel.

Setting	Description
-10,000...10,000 (1)	Setting range **Factory setting**: –
1): range according to **[AIV3 Type]** AIV3t.	

[Pre-Ramp Ref Freq] FrH

Frequency reference before ramp.

This parameter is read-only. It enables to display the reference frequency applied to the motor, regardless of which channel for reference value has been selected.

Setting	Description
-500.0...500.0 Hz	Setting range **Factory setting**: 0 Hz

[Ref Frequency] LFr

Reference frequency.

This parameter only appears if the function has been enabled. It is used to change the reference frequency from the remote control. OK does not have to be pressed to enable a change of reference.

Setting	Description
-500.0...500.0 Hz	Setting range **Factory setting**: –

[Motor Frequency] rFr

Motor frequency.

This parameter displays the estimated rotor frequency without motor slip.

Setting	Description
-3,276.7...3,276.7 Hz	Setting range **Factory setting**: 0.0 Hz

[Multiplying coeff.] MFr

Multiplying coefficient

This parameter can be accessed if **[Ref Freq 2 Multiply]** MA2 or **[Ref Freq 3 Multiply]** MA3 are not set to **[Not Configured]** nO.

Setting	Description
0...100 %	Setting range **Factory setting**: –

[Mains Voltage] ULn

Mains voltage based on AC bus measurement, motor running or stopped.

Setting	Description
1.0...6,553.5 Vac	Setting range: **[no meas.]** ---- is displayed if no value is measured. **Factory setting**: –

[Mains Voltage phase 1-2] UL1

Mains voltage phase 1-2 measurement.

This parameter cannot be accessed on ATV630C22N4...C31N4.

Setting	Description
-3,276.7...3,276.7 Vac	Setting range **Factory setting**: –

[Mains Voltage phase 2-3] UL2

Mains voltage phase 2-3 measurement.

This parameter cannot be accessed on ATV630C22N4...C31N4.

Setting	Description
-3,276.7...3,276.7 Vac	Setting range **Factory setting**: –

[Mains Voltage phase 3-1] ULn

Mains voltage phase 3-1 measurement

This parameter cannot be accessed on ATV630C22N4...C31N4.

Setting	Description
-3,276.7...3,276.7 Vac	Setting range **Factory setting**: –

[Mains Current] ILn

Actual mains current (effective value of the fundamental mode).

Accuracy: 2% (related to drive nominal current).

This parameter can be accessed on ATV680 and ATV6B0.

Setting	Description
According to drive rating	Setting range **Factory setting**: –

[Mains Frequency] FrC

Actual mains frequency.

This parameter can be accessed on ATV680 and ATV6B0.

Setting	Description
0.0...999.9 Hz	Setting range **Factory setting**: –

[DC Bus Voltage] Vbus

DC bus voltage.

Setting	Description
0...6,553.5 Vdc	Setting range **Factory setting**: –

[Drive Therm State] tHd

Drive thermal state.

The normal drive thermal state is 100%, the **[Motor Overload]** oLF is set to 118%.

Setting	Description
0...200%	Setting range **Factory setting**: –

[Used Param. Set] CFPS ★

Used parameter set.

Configuration parameter status (can be accessed if parameter switching function has been enabled).

Setting	Code / Value	Description
[None]	no	Not assigned
[Set N°1]	CFP1	Parameter set 1 active
[Set N°2]	CFP2	Parameter set 2 active
[Set N°3]	CFP3	Parameter set 3 active

[Config. active] CnFS

Active configuration.

Setting	Code / Value	Description
[In progress]	no	Transitory state
[Config. No.0]	CnF0	Configuration 0 active

Section 7.6
[Thermal monitoring]

[Thermal Monitoring] tPM - Menu

Access

[Display] ➡ **[Thermal Monitoring]**

About This Menu

The content of this menu can be accessed if the thermal monitoring function has been activated.

Wiring

Refer to the wiring *(see page 189)* of the **[Thermal monitoring]** tPP - menu.

[AI2 Th Value] tH2V ★

AI2 thermal value.

Setting	Description
-15...200°C	Setting range **Factory setting: –**

[AI3 Th Value] tH3V ★

AI3 thermal value.

Identical to **[AI2 Th Value]** tH2V.

[AI4 Th Value] tH4V ★

AI4 thermal value.

Identical to **[AI2 Th Value]** tH2V.

This parameter can be accessed if VW3A3203 I/O extension module has been inserted.

[AI5 Th Value] tH5V ★

AI5 thermal value.

Identical to **[AI2 Th Value]** tH2V.

This parameter can be accessed if VW3A3203 I/O extension module has been inserted.

Section 7.7
[PID display]

[PID display] P ıC - Menu

Access

[Display] ➞ [PID display]

About This Menu

[Internal PID ref] rPı ★

Internal PID reference.

Setting	Description
0...32,767	Setting range **Factory setting**: 150

[PID Reference] rPC ★

PID setpoint value.

Setting	Description
0...65,535	Setting range **Factory setting**: 0

[PID feedback] rPF ★

PID feedback value.

Setting	Description
0...65,535	Setting range **Factory setting**: 0

[PID Error] rPE ★

PID error value.

Setting	Description
-32,767...32,767	Setting range **Factory setting: –**

[PID Output] rPo ★

PID output value.

Setting	Description
[PID Min Output] PoL ...**[PID Max Output]** Poh	Setting range **Factory setting**: _

Section 7.8
[Counter management]

[Counter Management] *E L E* - Menu

Access

[Display] ➡ **[Counter Management]**

About This Menu

This menu shows the drive and motor-related counters.

[Motor Run Time] *r E H H*

Motor run time.

Run elapsed time display (resettable) in 0.1 hours (length of time the motor has been switched on).

Setting	Description
0.0...429,496,729.5 h	Setting range **Factory setting**: _

[Power-on Time] *P E H H*

Power-on time (resettable) or counter can be set to 0 by using the **[Time Counter Reset]** *r P r* parameter.

Setting	Description
0.0...429,496,729.5 h	Setting range **Factory setting**: _

[Fan Operation Time] *F P b E*

Fan operation time.

As soon as **[Fan Operation Time]** *F P b E* reach the predefined value of 45,000 hours, a warning **[Fan Counter Warning]** *F C E A* is triggered.

[Fan Operation Time] *F P b E* counter can be set to 0 by using the **[Time Counter Reset]** *r P r* parameter.

Setting	Description
0...500,000 h	Setting range **Factory setting**: Read Only

[Nb Of Start] *n S M*

Number of motor starts (resettable) or counter can be set to 0 by using the **[Time Counter Reset]** *r P r* parameter.

Setting	Description
0...4,294,967,295	Setting range **Factory setting**: _

[Cabinet Fan Opt Time] F C E

Cabinet Fan operation time

If **[Cabinet Fan Oper Time]** F C E has reached the predefined value of 30,000 hours, a warning **[Cabinet Fan Counter Warn]** F C C A is triggered.

This parameter can be accessed on ATV660 or ATV680.

Setting	Description
0...500,000 h	Setting range **Factory setting**: Read Only

[AFE Run Time] b r H H

AFE Run Time

This parameter can be accessed on ATV680 and ATV6B0.

Setting	Description
0.0...429,496,729.5 h	Setting range **Factory setting**: _

[AFE Power-On Time] b P H H

AFE brick power on elapsed time

This parameter can be accessed on ATV680 and ATV6B0.

Setting	Description
0.0...429,496,729.5 h	Setting range **Factory setting**: _

[AFE Fan Operation Time] F b A E

AFE Fan Operation Time

If **[AFE Fan Operation Time]** F b A E has reached the predefined value of 45,000 hours, a warning **[AFE Fan Counter Warn]** F C b A is triggered.

This parameter can be accessed on ATV680 and ATV6B0.

Setting	Description
0...50,000 h	Setting range **Factory setting**: _

[AFE Nb of starts] b n S A

AFE number of starts

This parameter can be accessed on ATV680 and ATV6B0.

Setting	Description
0...4,294,967,295	Setting range **Factory setting**: _

[Time Counter Reset] rPr

Time counter reset.

Setting	Code / Value	Description
[No]	nO	No **Factory setting**
[Run Time Reset]	rtH	Run time reset
[Power ON Time Reset]	PtH	Power ON time reset
[Reset Fan Counter]	FtH	Reset fan counter
[Clear NSM]	nSM	Clear number of motor starts
[Efficiency MAX]	EFYK	Efficiency max
[Efficiency MIN]	EFYJ	Efficiency min
[Flow Rate MAX]	FSIK	Flow rate max
[Flow Rate MIN]	FSIJ	Flow rate min
[Reset Total Quantity]	FSIC	Reset total quantity
[Clear AFE Fan]	FbAt	Clear AFE Fan operation time (1)
[Clear Cabinet Fan]	FCt	Clear cabinet fan operation time **NOTE:** This selection can be accessed on ATV660 and ATV680.
[Clear AFE Power ON Time]	bPth	Clear AFE power ON time (1)
[Clear BRTH]	brth	Clear AFE run time (1)
[Clear AFE Nb. start]	bnSA	Clear AFE brick number of start (1)
1 This selection can be accessed on ATV680 and ATV6B0.		

Section 7.9
[Other state]

[Other state] SSt - Menu

Access

[Display] ➡ [Other state]

About This Menu

List of secondary states.

List

[Anti-Jam pending] JAMP

[Anti-Jam In Progress] JAMr

[PipeFill In Progress] F iLL

[InPres Comp Active] iPPC

[Sleep Active] SLM

[Priming pump running] PPon

[Jockey pump running] JPon

[Sleep Boost active] SLPb

[Sleep Check Active] ASLC

[Set 1 active] CFP 1

[Set 2 active] CFP2

[Set 3 active] CFP3

[Automatic restart] Aut o

[DC Bus Charged] dbL

[Fast stop Active] FSt

[Fallback Frequency] FrF

[Speed Maintained] rLS

[Type of stop] Stt

[Ref Freq Warning] SrA

[Forward] MFrd

[Reverse] Mrr S

[Autotuning] tun

Section 7.10
[I/O map]

What Is in This Section?

This section contains the following topics:

Topic	Page
[Digital Input Map] L iA - Menu	122
[AI1] A i1C - Menu	122
[AI2] A i2C - Menu	124
[AI3] A i3C - Menu	125
[AI4] A i4C - Menu	126
[AI5] A i5C - Menu	127
[Digital output map] L oA - Menu	128
[AQ1] Ao 1C - Menu	128
[AQ2] Ao2C - Menu	132
[DI5 frequency measured] PFC5 - Menu	134
[DI6 frequency measured] PFC6 - Menu	136
[Cabinet Digital Input Map] L iCA - Menu	137
[Cabinet Digital Output Map] L oCA - Menu	137

[Digital Input Map] L I A - Menu

Access

[Display] ➡ [I/O map] ➡ [Digital Input Map]

About This Menu

This menu presents the state and assignment of digital inputs.

Read-only parameters, cannot be configured.

If no functions have been assigned, **[Not assigned]** n o is displayed. Use the touch wheel to scroll through the functions.

[AI1] A I 1 C - Menu

Access

[Display] ➡ [I/O map] ➡ [Analog inputs image] ➡ [AI1]

[AI1] A I 1 C

Physical value AI1.

AI1 customer image: value of analog input 1.

Setting	Description
-32,767...32,767	Setting range **Factory setting: –**

NOTE: The parameters **[AI1 Assignment]** A I 1 A, **[AI1 min value]** u I 1 L, **[AI1 max value]** u I 1 H and **[AI1 filter]** A I 1 F can be accessed on the Graphic Display Terminal by pressing the **OK** key on the **[AI1]** A I 1 C parameter.

[AI1 Assignment] A I 1 A

Analog input AI1 functions assignment.

Read-only parameter, cannot be configured. It displays all the functions associated with input AI1 in order to verify, for example, for compatibility problems.

If no functions have been assigned, **[No]** n o is displayed.

Setting	Code / Value	Description
[No]	n o	Not assigned
[AQ1 assignment]	A o 1	Analog output AQ1
[AQ2 assignment]	A o 2	Analog output AQ2
[Ref Freq Channel 1]	F r 1	Reference frequency channel 1 **Factory Setting**
[Ref Freq Channel 2]	F r 2	Reference frequency channel 2
[Ref Frequency 2 Summing]	S A 2	Reference frequency 2 summing
[PID Feedback]	P I F	PI controller feedback
[Subtract Ref Freq 2]	d A 2	Subtract reference frequency 2
[Manual PID Ref.]	P I M	Manual speed reference of the PID controller (auto-man)
[PID Ref Frequency]	F P I	PID reference frequency
[Ref Frequency 3 Summing]	S A 3	Reference frequency 3 summing
[Ref Frequency 1B]	F r 1 b	Reference frequency 1B

Setting	Code / Value	Description
[Subtract Ref Freq 3]	dA3	Subtract reference frequency 3
[Forced local]	FLoC	Forced local reference source1
[Ref Frequency 2 multiplier]	MA2	Reference frequency 2 multiplier
[Ref Frequency 3 multiplier]	MA3	Reference frequency 3 multiplier
[Virtual AI1 Channel]	AIC1	Virtual AI1 channel
[Virtual AI2 Channel]	AIC2	Virtual AI2 channel
[Virtual AI3 Channel]	AIC3	Virtual AI3 channel
[InletPres Assign]	PS1A	Inlet pressure sensor
[OutletPres Assign]	PS2A	Outlet pressure sensor
[Inst Flow Assign]	FS1A	Installation flow sensor
[Pump Flow Assign]	FS2A	Pump flow sensor
[LevelCtrl Sensor]	LCSA	Level control analog sensor

[AI1 min value] uIL1★

AI1 minimum value.

AI1 voltage scaling parameter of 0%.

This parameter can be accessed if **[AI1 Type]** AI1t is set to **[Voltage]** 10u.

Setting	Description
0.0...10.0 Vdc	Setting range **Factory setting**: 0.0 Vdc

[AI1 max value] uIH1★

AI1 maximum value.

AI1 voltage scaling parameter of 100%.

This parameter can be accessed if **[AI1 Type]** AI1t is set to **[Voltage]** 10u.

Setting	Description
0.0...10.0 Vdc	Setting range **Factory setting**: 10.0 Vdc

[AI1 min. value] CrL1★

AI1 minimum value.

AI1 current scaling parameter of 0%.

This parameter can be accessed if **[AI1 Type]** AI1t is set to **[Current]** 0A.

Setting	Description
0.0...20.0 mA	Setting range **Factory setting**: 0.0 mA

[AI1 max. value] CrH1★

AI1 maximum value.

AI1 current scaling parameter of 100%.

This parameter can be accessed if **[AI1 Type]** A1tY is set to **[Current]** 0A.

Setting	Description
0.0...20.0 mA	Setting range **Factory setting**: 20.0 mA

[AI1 filter] A1F

AI1 filter.

Interference filtering.

Setting	Description
0.00...10.00 s	Setting range **Factory setting**: 0.00 s

[AI2] A2C - Menu

Access

[Drive menu] ➞ **[Display]** ➞ **[I/O map]** ➞ **[Analog inputs image]** ➞ **[AI2]**

[AI2] A2C

Physical value AI2.

AI2 customer image: value of analog input 2.

Identical to **[AI1]** A1C *(see page 122)*.

[AI2 Assignment] A2A

Configuration of AI2.

Identical to **[AI1 Assignment]** A1A *(see page 122)*.

[AI2 min value] uL2★

AI2 minimum value.

AI2 voltage scaling parameter of 0%.

This parameter can be accessed if **[AI2 Type]** A2tY is set to **[Voltage]** 10u.

Identical to **[AI1 min value]** uL1 *(see page 123)*.

[AI2 max value] uH2★

AI2 maximum value.

AI2 voltage scaling parameter of 100%.

This parameter can be accessed if **[AI2 Type]** A2tY is set to **[Voltage]** 10u.

Identical to **[AI1 max value]** uH1 *(see page 123)*.

[AI2 min. value] CrL2★

AI2 current scaling parameter of 0%.

This parameter can be accessed if **[AI2 Type]** A2tY is set to **[Current]** 0A.

Identical to **[AI1 Min. Value]** CrL1 *(see page 124)*

[AI2 max. value] *CrH2* ★

AI2 current scaling parameter of 100%.

This parameter can be accessed if **[AI2 Type]** *AI2t* is set to **[Current]** *0A*.

Identifcal to **[AI2 Max. Value]** *CrH1* *(see page 125)*

[AI2 filter] *AI2F*

AI2 filter.

Interference filtering.

Identical to **[AI1 filter]** *AI1F* *(see page 124)*.

[AI3] *AI3C* - Menu

Access

[Display] ➡ **[I/O map]** ➡ **[Analog inputs image]** ➡ **[AI3]**

[AI3] *AI3C*

Physical value AI3.

AI3 customer image: value of analog input 3.

Identical to **[AI1]** *AI1C* *(see page 122)*.

[AI3 Assignment] *AI3A*

Configuration of AI3.

Identical to **[AI1 Assignment]** *AI1A* *(see page 122)*.

[AI3 min value] *uIL3* ★

AI3 voltage scaling parameter of 0%.

This parameter can be accessed if **[AI3 Type]** *AI3t* is set to **[Voltage]** *10u*.

Identical to **[AI1 min value]** *uIL1* *(see page 123)*.

[AI3 max value] *uIH3* ★

AI3 voltage scaling parameter of 100%.

This parameter can be accessed if **[AI3 Type]** *AI3t* is set to **[Voltage]** *10u*.

Identical to **[AI1 max value]** *uIH1* *(see page 123)*.

[AI3 min. value] *CrL3* ★

This parameter can be accessed if **[AI3 Type]** *AI3t* is set to **[Current]** *0A*.

Identical to **[AI1 min. value]** *CrL1* *(see page 123)*.

[AI3 max. value] *CrH3* ★

AI3 current scaling parameter of 100%.

This parameter can be accessed if **[AI3 Type]** *AI3t* is set to **[Current]** *0A*.

Identical to **[AI1 max. value]** *CrH1* *(see page 123)*.

[AI3 Filter] *AI3F*

AI3 filter.

Interference filtering.

Identical to **[AI1 filter]** *AI1F* *(see page 124)*.

[AI4] AI4C - Menu

Access

[Display] ➡ **[I/O map]** ➡ **[Analog inputs image]** ➡ **[AI4]**

About This Menu

This menu can be accessed if VW3A3203 I/O extension module has been inserted.

[AI4] AI4C

Physical value AI4.

AI4 customer image: value of analog input 4.

Identical to **[AI1]** AI1C *(see page 122)*.

[AI4 Assignment] AI4A

AI4 functions assignment. If no functions have been assigned, **[No]** nO is displayed.

Identical to **[AI1 Assignment]** AI1A *(see page 122)*.

[AI4 min value] uL4★

AI4 minimum value.

AI4 voltage scaling parameter of 0%.

This parameter can be accessed if **[AI4 Type]** AI4t is set to **[Voltage]** 10u.

Identical to **[AI1 min value]** uL1 *(see page 123)*.

[AI4 max value] uH4★

AI4 maximum value.

AI4 voltage scaling parameter of 100%.

This parameter can be accessed if **[AI4 Type]** AI4t is set to **[Voltage]** 10u.

Identical to **[AI1 max value]** uH1 *(see page 123)*.

[AI4 min. value] CrL4★

AI4 minimum value.

AI4 current scaling parameter of 0%.

This parameter can be accessed if **[AI4 Type]** AI4t is set to **[Current]** 0A.

Identical to **[AI1 min. value]** CrL1 *(see page 123)*.

[AI4 max. value] CrH4★

AI4 maximum value.

AI4 current scaling parameter of 100%.

This parameter can be accessed if **[AI4 Type]** AI4t is set to **[Current]** 0A.

Identical to **[AI1 max. value]** CrH1 *(see page 123)*.

[AI4 filter] AI4F

AI4 filter.

Interference filtering.

Identical to **[AI1 filter]** AI1F *(see page 124)*.

[AI5] AI5C - Menu

Access

[Display] ➡ **[I/O map]** ➡ **[Analog inputs image]** ➡ **[AI5]**

About This Menu

This menu can be accessed if VW3A3203 I/O extension module has been inserted.

[AI5] AI5C

AI5 customer image: value of analog input 5.

Identical to **[AI1]** AI1C *(see page 122)*.

[AI5 Assignment] AI5A

AI5 functions assignment. If no functions have been assigned, **[No]** nO is displayed.

Identical to **[AI1 Assignment]** AI1A *(see page 122)*.

[AI5 min value] U5IL ★

AI5 voltage scaling parameter of 0%.

This parameter can be accessed if **[AI5 Type]** AI5t is set to **[Voltage]** 10U.

Identical to **[AI1 min value]** U1IL *(see page 123)*.

[AI5 max value] U5IH ★

AI5 voltage scaling parameter of 100%.

This parameter can be accessed if **[AI5 Type]** AI5t is set to **[Voltage]** 10U.

Identical to **[AI1 max value]** U1IH *(see page 123)*.

[AI5 min. value] CrL5 ★

AI5 current scaling parameter of 0%.

This parameter can be accessed if **[AI5 Type]** AI5t is set to **[Current]** 0A.

Identical to **[AI1 min. value]** CrL1 *(see page 123)*.

[AI5 max. value] CrH5 ★

AI5 current scaling parameter of 100%.

This parameter can be accessed if **[AI5 Type]** AI5t is set to **[Current]** 0A.

Identical to **[AI1 max. value]** CrH1 *(see page 123)*.

[AI5 filter] AI5F

AI5 filter.

Interference filtering.

Identical to **[AI1 filter]** AI1F *(see page 124)*.

[Digital output map] L o A - Menu

Access

[Display] ➡ [I/O map] ➡ [Digital output map]

About This Menu

DQ assignment.

R1, R2, R3 assignment.

R4, R5, R6 assignment if VW3A3204 relay output option module has been inserted.

DQ11, DQ12 assignment if VW3A3203 I/O extension module has been inserted.

On the Graphic Display Terminal, click the digital output to see the assignment.

Read-only parameters, cannot be configured.

It displays the function which is assigned to a digital output. If no function has been assigned, **[Not assigned]** n o is displayed.

It allows to verify the delay, active state, and holding time set for the digital output. Possible values are identical as those in the configuration menu.

[AQ1] A o 1 C - Menu

Access

[Display] ➡ [I/O map] ➡ [Analog outputs image] ➡ [AQ1]

Minimum and Maximum Output Values

The minimum output value, in volts, corresponds to the lower limit of the assigned parameter and the maximum value corresponds to its upper limit. The minimum value may be greater than the maximum value.

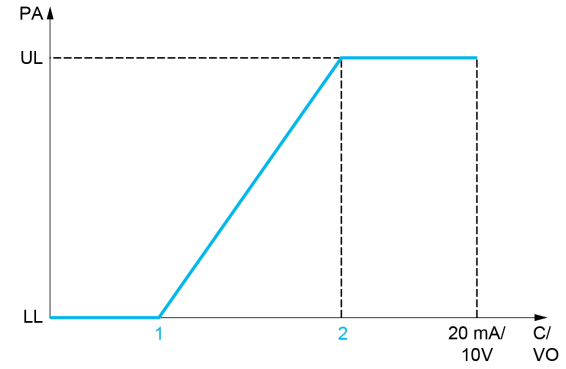

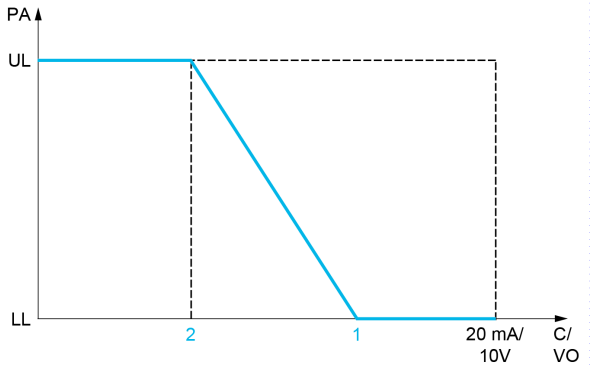

PA Parameter assigned
C / VO Current or voltage output
UL Upper limit
LL Low limit
1 **[Min Output]** A o L X or u o L X
2 **[Max Output]** A o H X or u o H X

Scaling of the Assigned Parameter

The scale of the assigned parameter can be adapted in accordance with requirements by modifying the values of the lower and upper limits with two parameters for each analogic output.

These parameters are given in %. 100% corresponds to the total variation range of the configured parameter, so: 100% = upper limit - lower limit.

For example, **[Sign. torque]** StQ which varies between –3 and +3 times the rated torque, 100% corresponds to 6 times the rated torque.

- The **[Scaling AQx min]** ASLx parameter modifies the lower limit: new value = lower limit + (range x ASLx). The value 0% (factory setting) does not modify the lower limit.
- The **[Scaling AQx max]** ASHx parameter modifies the upper limit: new value = lower limit + (range x ASLx). The value 100% (factory setting) does not modify the upper limit.
- **[Scaling AQx min]** ASLx must always be lower than **[Scaling AQx max]** ASHx.

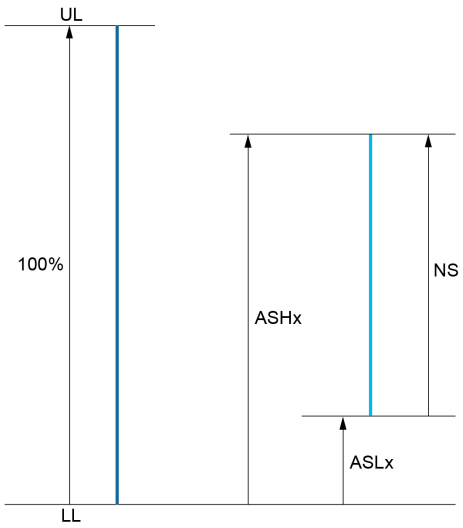

UL Upper limit of the assigned parameter
LL Lower limit of the assigned parameter
NS New scale
ASHx Scaling max
ASLx Scaling min

Application Example

The value of the motor current at the AQ1 output is to be transferred with 0...20 mA, range 2 In motor, In motor being the equivalent of a 0.8 In drive.

- The **[Motor Current]** oCr parameter varies from 0 to 2 times the rated drive current.
- **[Scaling AQ1 min]** ASL1 must not modify the lower limit, which therefore remains at its factory setting of 0%.
- **[Scaling AQ1 max]** ASH1 must modify the upper limit by 0.5x the rated motor torque, or 100 - 100/5 = 80% (new value = lower limit + (range x ASH1).

[AQ1] Ao1C

AQ1 customer image: value of analogic output 1.

Setting	Description
-32,767...32,767	Setting range **Factory setting**: Read only

[AQ1 assignment] AO1

AQ1 assignment.

Setting	Code / Value	Description
[Not Configured]	nO	Not assigned
[Motor Current]	OCr	Current in the motor, from 0 to 2 In (In = rated drive current indicated in the Installation manual and on the drive nameplate)
[Motor Frequency]	OFr	Output frequency, from 0 to [Max Frequency] tFr Factory Setting
[Ramp out.]	OrP	From 0 to [Max Frequency] tFr
[Motor torq.]	trq	Motor torque, from 0 to 3 times the rated motor torque
[Sign. torque]	Stq	Signed motor torque, between –3 and +3 times the rated motor torque. The + sign corresponds to the motor mode and the – sign to the generator mode (braking).
[sign ramp]	Ors	Signed ramp output, between –[Max Frequency] tFr and +[Max Frequency] tFr
[PID ref.]	OPS	PID controller reference between [Min PID reference] PIP1 and [Max PID reference] PIP2
[PID feedbk]	OPF	PID controller feedback between [Min PID feedback] PIF1 and [Max PID feedback] PIF2
[PID error]	OPE	PID controller detected error between –5% and +5% of [Max PID feedback] PIF2 – [Min PID feedback] PIF1
[PID output]	OPI	PID controller output between [Low speed] LSP and [High speed] HSP
[Motor power]	OPr	Motor power, between 0 and 2.5 times [Nominal Motor Power] nPr
[Mot thermal]	tHr	Motor thermal state, from 0 to 200% of the rated thermal state
[Drv thermal]	tHd	Drive thermal state, from 0 to 200% of the rated thermal state
[Sig. o/p frq.]	OFS	Signed output frequency, between –[Max Frequency] tFr and +[Max Frequency] tFr
[Motor volt.]	UOP	Voltage applied to the motor, between 0 and [Nom Motor Voltage] UnS
[Inlet Pressure Value]	PS1u	Inlet pressure value
[Outlet Pressure Value]	PS2u	Outlet pressure value
[Installation Flow]	FS1u	Installation flow value

[AQ1 Min Output] UOL1 ★

AQ1 minimum output.

This parameter can be accessed if [AQ1 Type] AO1t is set to [Voltage] 10U.

Setting	Description
0.0...10.0 Vdc	Setting range Factory setting: 0.0 Vdc

[AQ1 max Output] UOH1 ★

AQ1 maximum output.

This parameter can be accessed if [AQ1 Type] AO1t is set to [Voltage] 10U.

Setting	Description
0.0...10.0 Vdc	Setting range Factory setting: 10.0 Vdc

[AQ1 min output] AOL 1 ★

AQ1 minimum output.

This parameter can be accessed if **[AQ1 Type]** AOT is set to **[Current]** 0A.

Setting	Description
0.0...20.0 mA	Setting range **Factory setting**: 0.0 mA

[AQ1 max output] AOH 1 ★

AQ1 maximum output.

This parameter can be accessed if **[AQ1 Type]** AOT is set to **[Current]** 0A.

Setting	Description
0.0...20.0 mA	Setting range **Factory setting**: 20.0 mA

[Scaling AQ1 min] ASL 1

Scaling of the lower limit of the assigned parameter, as a percentage of the maximum possible variation.

Setting	Description
0.0...100.0%	Setting range **Factory setting**: 0.0%

[Scaling AQ1 max] ASH 1

Scaling of the upper limit of the assigned parameter, as a percentage of the maximum possible variation.

Setting	Description
0.0...100.0%	Setting range **Factory setting**: 100.0%

[AQ1 Filter] AOF

Interference filtering.

Setting	Description
0.00...10.00 s	Setting range **Factory setting**: 0.00 s

[AQ2] AO2C - Menu

Access

[Display] ➡ [I/O Map] ➡ [Analog outputs image] ➡ [AQ2]

[AQ2] AO2C

AQ2 customer image: value of analog output 2.

Identical to **[AQ1]** AO1C *(see page 129)*.

[AQ2 Assignment] AO2

AQ2 assignment.

Setting	Code / Value	Description
[Not Configured]	nO	Not assigned
[Motor Current]	OCr	Current in the motor, from 0 to 2 In (In = rated drive current indicated in the Installation manual and on the drive nameplate) **Factory Setting**
[Motor Frequency]	OFr	Output frequency, from 0 to **[Max Frequency]** tFr
[Ramp out.]	OrP	From 0 to **[Max Frequency]** tFr
[Motor torq.]	trq	Motor torque, from 0 to 3 times the rated motor torque
[Sign. torque]	Stq	Signed motor torque, between –3 and +3 times the rated motor torque. The + sign corresponds to the motor mode and the – sign to the generator mode (braking).
[sign ramp]	Ors	Signed ramp output, between –**[Max Frequency]** tFr and +**[Max Frequency]** tFr
[PID ref.]	OPS	PID controller reference between **[Min PID reference]** PIP1 and **[Max PID reference]** PIP2
[PID feedbk]	OPF	PID controller feedback between **[Min PID feedback]** PIF1 and **[Max PID feedback]** PIF2
[PID error]	OPE	PID controller detected error between –5% and +5% of **[Max PID feedback]** PIF2 – **[Min PID feedback]** PIF1
[PID output]	OPI	PID controller output between **[Low speed]** LSP and **[High speed]** HSP
[Motor power]	OPr	Motor power, between 0 and 2.5 times **[Nominal Motor Power]** nPr
[Mot thermal]	tHr	Motor thermal state, from 0 to 200% of the rated thermal state
[Drv thermal]	tHd	Drive thermal state, from 0 to 200% of the rated thermal state
[Sig. o/p frq.]	OFS	Signed output frequency, between –**[Max Frequency]** tFr and +**[Max Frequency]** tFr
[Motor volt.]	UOP	Voltage applied to the motor, between 0 and **[Nom Motor Voltage]** UnS
[Inlet Pressure Value]	PS1u	Inlet pressure value
[Outlet Pressure Value]	PS2u	Outlet pressure value
[Installation Flow]	FS1u	Installation flow value

[AQ2 Min Output] UOL2 ★

AQ2 minimum output.

This parameter can be accessed if **[AQ2 Type]** AO2t is set to **[Voltage]** 10U.

Identical to **[AQ1 min Output]** UOL1 *(see page 130)*.

[AQ2 Max Output] uoH2 ★

AQ2 maximum output.

This parameter can be accessed if **[AQ2 Type]** Ao2t is set to **[Voltage]** 10u.

Identical to **[AQ1 max Output]** uoH 1 *(see page 130)*.

[AQ2 Min Output] AoL2 ★

AQ2 minimum output.

This parameter can be accessed if **[AQ2 Type]** Ao2t is set to **[Current]** 0A.

Identical to **[AQ1 Min Output]** AoL 1.

[AQ2 Max Output] AoH2 ★

AQ2 maximum output.

This parameter can be accessed if **[AQ2 Type]** Ao2t is set to **[Current]** 0A.

Identical to **[AQ1 Max Output]** AoH 1.

[Scaling AQ2 min] A5L2

Scaling of the lower limit of the assigned parameter, as a % of the maximum possible variation.

Identical to **[Scaling AQ2 min]** A5L 1 *(see page 131)*.

[Scaling AQ2 max] A5H2

Scaling of the upper limit of the assigned parameter, as a % of the maximum possible variation.

Identical to **[Scaling AQ1 max]** A5H 1 *(see page 131)*.

[AQ2 Filter] Ao2F

Interference filtering.

Identical to **[AQ1 Filter]** AoIF *(see page 131)*.

[DI5 frequency measured] PFC5 - Menu

Access

[Display] ➡ [I/O map] ➡ [Freq. signal image] ➡ [DI5 frequency measured]

About This Menu

Following parameters can be accessed on the Graphic Display Terminal by pressing the OK key on the **[DI5 Frequency Measured]** PFC5 parameter.

[DI5 Frequency Measured] PFC5

Filtered customer pulse input frequency reference.

Setting	Description
0...4,294,967,295	Setting range **Factory setting**: _

[DI5 Pulse Input Assign] PI5A

Di5 pulse input assignment.

It displays all the functions associated with the pulse input in order to verify, for example, for compatibility problems.

If no functions have been assigned, **[No]** no is displayed.

Setting	Code / Value	Description
[No]	no	Not assigned **Factory Setting**
[AQ1 assignment]	Ao1	Analog output AQ1
[AQ2 assignment]	Ao2	Analog output AQ2
[Ref Freq Channel 1]	Fr1	Reference frequency channel 1
[Ref Freq Channel 2]	Fr2	Reference frequency channel 2
[Ref Frequency 2 Summing]	SA2	Reference frequency 2 summing
[PID Feedback]	PIF	PI controller feedback
[Subtract Ref Freq 2]	dA2	Subtract reference frequency 2
[Manual PID Ref.]	PIM	Manual speed reference of the PID controller (auto-man)
[PID Ref Frequency]	FPI	PID reference frequency
[Ref Frequency 3 Summing]	SA3	Reference frequency 3 summing
[Ref Frequency 1B]	Fr1b	Reference frequency 1B
[Subtract Ref Freq 3]	dA3	Subtract reference frequency 3
[Forced local]	FLoC	Forced local reference source1
[Ref Frequency 2 multiplier]	MA2	Reference frequency 2 multiplier
[Ref Frequency 3 multiplier]	MA3	Reference frequency 3 multiplier
[Virtual AI1 Channel]	AIC1	Virtual AI1 channel
[Virtual AI2 Channel]	AIC2	Virtual AI2 channel
[Virtual AI3 Channel]	AIC3	Virtual AI3 channel

Setting	Code / Value	Description
[InletPres Assign]	P S 1 A	Inlet pressure sensor
[OutletPres Assign]	P S 2 A	Outlet pressure sensor
[Inst Flow Assign]	F S 1 A	Installation flow sensor
[Pump Flow Assign]	F S 2 A	Pump flow sensor
[LevelCtrl Sensor]	L C S A	Level control analog sensor

[DI5 PulseInput Low Freq] P ı L 5

Di5 pulse input low frequency.

Pulse input scaling parameter of 0% in Hz x 10 unit.

Setting	Description
0.00...30000.00 Hz	Setting range **Factory setting**: 0 Hz

[DI5 PulseInput High Freq] P ı H 5

Di5 pulse input high frequency.

Pulse input scaling parameter of 100% in Hz x 10 unit.

Setting	Description
0.00...30.00 kHz	Setting range **Factory setting**: 30.00 kHz

[DI5 Frequency Filter] P F ı 5

Interference filtering pulse input cut-off time of the low-filter.

Setting	Description
0...1,000 ms	Setting range **Factory setting**: 0 ms

[DI6 frequency measured] P F C 6 - Menu

Access

[Display] ➡ [I/O map] ➡ [Freq. signal image] ➡ [DI6 frequency measured]

About This Menu

Following parameters can be accessed on the Graphic Display Terminal by pressing the OK key on the **[DI6 Frequency Measured]** P F C 6 parameter.

[DI6 Frequency Measured] P F C 6

Filtered customer pulse input frequency reference.

Identical to **[DI5 frequency measured]** P F C 5 *(see page 134)*.

[DI6 Pulse Input Assign] P I 6 A

Di6 pulse input assignment.

Identical to **[DI5 Pulse Input Assign]** P I 5 A *(see page 134)*.

[DI6 PulseInput Low Freq] P I L 6

Di6 pulse input low frequency.

Identical to **[DI5 PulseInput Low Freq]** P I L 5 *(see page 135)*.

[DI6 PulseInput High Freq] P I H 6

Di6 pulse input high frequency.

Identical to **[DI5 PulseInput High Freq]** P I H 5 *(see page 135)*.

[DI6 Frequency Filter] P F I 6

Interference filtering pulse input cut-off time of the low-filter.

Identical to **[DI5 Frequency Filter]** P F I 5 *(see page 135)*.

[Cabinet Digital Input Map] L iCA - Menu

Access

[Display] ➡ [I/O Map] ➡ [Cabinet Digital Input Map]

These parameters can be accessed on ATV660 or ATV680, equipped with cabinet IO, and if **[Access Level]** LAC is set to **[Expert]** EPr.

About This Menu

This menu presents the state and assignment of cabinet digital inputs.

Read-only parameters cannot be configured.

It is used to visualize the state of the cabinet digital inputs

It displays all the functions that are assigned to a cabinet digital input, in order to verify for multiple assignments.

If no functions have been assigned, **[Not assigned]** no is displayed. Use the touch wheel to scroll through the functions.

[Cabinet Digital Output Map] LoCA - Menu

Access

[Display] ➡ [I/O Map] ➡ [Cabinet Digital Output Map]

These parameters can be accessed on ATV660 or ATV680, equipped with cabinet IO, and if **[Access Level]** LAC is set to **[Expert]** EPr.

About This Menu

This menu presents the state and assignment of cabinet digital outputs.

Read-only parameters cannot be configured.

It displays the function which is assigned to a cabinet digital output. If no function has been assigned, **[Not assigned]** no is displayed.

It allows verifying the delay, active state, and holding time set for the cabinet digital outputs. Possible values are identical as those in the configuration menu.

Section 7.11
[Communication map]

What Is in This Section?

This section contains the following topics:

Topic	Page
[Communication map] CMM - Menu	139
[Modbus network diag] Mnd - Menu	142
[Com. scanner input map] iSA - Menu	143
[Com scan output map] oSA - Menu	144
[Modbus HMI Diag] MdH - Menu	145
[Ethernet Emb Diag] MPE - Menu	146
[Ethernet Module Diag] MtE - Menu	147
[DeviceNet Diag] dVn - Menu	148
[Profibus Diag] Prb - Menu	149
[PROFINET Diag] Prn - Menu	150
[Powerlink Diag] PWL - Menu	152
[Command word image] CWi - Menu	152
[Freq. ref. word map] rWi - Menu	153
[CANopen map] Cnm - Menu	154
[PDO1 image] Po1 - Menu	154
[PDO2 image] Po2 - Menu	155
[PDO3 image] Po3 - Menu	156
[CANopen map] Cnm - Menu	157

[Communication map] CMM - Menu

Access

[Display] ➡ [Communication map]

[Command Channel] CMdC

Command channel.

Setting	Code / Value	Description
[Terminals]	tEr	Terminal block source **Factory Setting**
[Ref.Freq-Rmt.Term]	LCC	Command via Graphic Display Terminal
[Ref. Freq-Modbus]	Mdb	Command via Modbus
[Ref. Freq-CANopen]	CAn	Command via CANopen if a CANopen module has been inserted
[Ref. Freq-Com. Module]	nEt	Command via fieldbus module if a fieldbus module has been inserted
[Embedded Ethernet]	EtH	Command via Embedded Ethernet

[Cmd Register] CMd

Command register.

[Control Mode] CHCF is not set to **[I/O profile]** IO

Possible values in CiA402 profile, separate, or not separate mode:

Bit	Description, Value
0	Set to 1: "Switch on"/Contactor command
1	Set to 0: "Disable voltage"/Authorization to supply AC power
2	Set to 0: "Quick stop"
3	Set to 1: "Enable operation"/Run command
4 to 6	Reserved (= 0)
7	"Fault reset" acknowledgment active on 0 to 1 rising edge
8	Set to 1: Halt stop according to the **[Type Of Stop]** Stt parameter without leaving the operation enabled state
9 and 10	Reserved (= 0)
11 to 15	Can be assigned to commands

Possible values in the I/O profile. On state command **[2-Wire Control]** 2C:

Bit	Description, Value
0	Forward (on state) command: 0: No forward command 1: Forward command **NOTE:** The assignment of bit 0 cannot be modified. It corresponds to the assignment of the terminals. It can be switched. Bit 0 CdOO is only active if the channel of this control word is active.
1 to 15	Can be assigned to commands

Possible values in the I/O profile. On edge command **[3-Wire Control]** 3C:

Bit	Description, Value
0	Stop (run authorization): 0: Stop 1: Run is authorized on a forward or reverse command
1	Forward (on 0 to 1 rising edge) command
2 to 15	Can be assigned to commands
NOTE: The assignment of bits 0 and 1 cannot be modified. It corresponds to the assignment of the terminals. It can be switched. Bits 0 CdOO and 1 CdO1 are only active if the channel of this control word is active.	

[Ref Freq Channel] rFCC

Channel of reference frequency.

Identical to **[Command Channel]** CNdC *(see page 139)*

[Pre-Ramp Ref Freq] FrH

Frequency reference before ramp.

This parameter is read-only. It enables to display the reference frequency applied to the motor, regardless of which channel for reference value has been selected.

Setting	Description
-500.0...500.0 Hz	Setting range **Factory setting**: 0 Hz

[CIA402 State Reg] EtA

CIA402 State Register.

Possible values in CiA402 profile, separate, or not separate mode:

Bit	Description, Value
0	"Ready to switch on", awaiting power section line supply
1	"Switched on", ready
2	"Operation enabled", running
3	Operating detected error state: 0: Inactive 1: Active
4	"Voltage enabled", power section line supply present: 0: Power section line supply unavailable 1: Power section line supply present **NOTE:** When the drive is powered by the power section only, this bit is always at 1.
5	Quick stop
6	"Switched on disabled", power section line supply locked
7	Warning: 0: No warning 1: Warning
8	Reserved (= 0)
9	Remote: command or reference via the network 0: Command or reference via the Graphic Display Terminal 1: Command or reference via the network
10	Targets reference reached: 0: The reference is not reached 1: The reference has been reached **NOTE:** When the drive is in speed mode, this is the speed reference.
11	"Internal limit active", reference outside limits: 0: The reference is within the limits 1: The reference is not within the limits **NOTE:** When the drive is in speed mode, the limits are defined by the **[Low speed]** LSP and **[High speed]** HSP parameters.
12	Reserved
13	Reserved
14	"Stop key", STOP via stop key: 0: STOP key not pressed 1: Stop triggered by the STOP key on the Graphic Display Terminal
15	"Direction", direction of rotation: 0: Forward rotation at output 1: Reverse rotation at output
NOTE: The combination of bits 0, 1, 2, 4, 5 and 6 defines the state in the DSP 402 state chart (see the communication manuals).	

Possible values in the I/O profile:

Bit	Description, Value
0	Reserved (= 0 or 1)
1	Ready: 0: Not ready 1: Ready
2	Running: 0: The drive does not start if a reference other than zero is applied 1: Running, if a reference other than zero is applied, the drive can start
3	Operating detected error state: 0: Inactive 1: Active
4	Power section line supply present: 0: Power section line supply unavailable 1: Power section line supply present
5	Reserved (= 1)
6	Reserved (= 0 or 1)
7	Warning 0: No warning 1: Warning
8	Reserved (= 0)
9	Command via a network: 0: Command via the terminals or the Graphic Display Terminal 1: Command via a network
10	Reference reached: 0: The reference is not reached 1: The reference has been reached
11	Reference outside limits: 0: The reference is within the limits 1: The reference is not within the limits **NOTE:** When the drive is in speed mode, the limits are defined by LSP and HSP parameters.
12	Reserved (= 0)
13	Reserved (= 0)
14	Stop via STOP key: 0: STOP key not pressed 1: Stop triggered by the STOP key on the Graphic Display Terminal
15	Direction of rotation: 0: Forward rotation at output 1: Reverse rotation at output
NOTE: The value is identical in the CiA402 profile and the I/O profile. In the I/O profile, the description of the values is simplified and does not refer to the CiA402 (Drivecom) state chart.	

[Modbus network diag] Mnd - Menu

Access

[Display] ➡ [Communication map] ➡ [Modbus network diag]

About This Menu

Used for the Modbus serial communication port at the bottom of the control block. Refer to the Modbus serial embedded communication manual for a complete description.

[COM LED] Mdb I

View of the Modbus communication LED.

[Mdb Frame Nb] MICt

Modbus network frames counter: number of processed frames.

Setting	Description
0...65,535	Setting range **Factory setting**: Read only

[Mb NET CRC errors] MIEC

Modbus network CRC error countered: number of CRC errors

Setting	Description
0...65,535	Setting range **Factory setting**: Read only

[Com. scanner input map] ıSA - Menu

Access

[Display] ➡ [Communication map] ➡ [Modbus network diag] ➡ [Com. scanner input map]

About This Menu

Used for CANopen® and Modbus network.

[Com Scan In1 val.] nM1

Com scanner input 1 value. Value of the first input word.

Setting	Description
0...65,535	Setting range **Factory setting**: Read only

[Com Scan In2 val.] nM2

Com scanner input 2 value. Value of the second input word.

Identical to **[Com Scan In1 val.] nM1** *(see page 143)*.

[Com Scan In3 val.] nM3

Com scanner input 3 value. Value of the third input word.

Identical to **[Com Scan In1 val.] nM1** *(see page 143)*.

[Com Scan In4 val.] nM4

Com scanner input 4 value. Value of the fourth input word.

Identical to **[Com Scan In1 val.] nM1** *(see page 143)*.

[Com Scan In5 val.] nM5

Com scanner input 5 value. Value of the fifth input word.

Identical to **[Com Scan In1 val.] nM1** *(see page 143)*.

[Com Scan In6 val.] nM6

Com scanner input 6 value. Value of the sixth input word.

Identical to **[Com Scan In1 val.] nM1** *(see page 143)*.

[Com Scan In7 val.] nM7

Com scanner input 7 value. Value of the seventh input word.

Identical to **[Com Scan In1 val.] nM1** *(see page 143)*.

[Com Scan In8 val.] nM8

Com scanner input 8 value. Value of the eighth input word.

Identical to **[Com Scan In1 val.] nM1** *(see page 143)*.

[Com scan output map] oSA - Menu

Access

[Display] ➡ [Communication map] ➡ [Com scan output map]

About This Menu

Used for CANopen® and Modbus networks.

[Com Scan Out1 val.] nC1

Com scanner output 1 value. Value of the first output word.

Setting	Description
0...65,535	Setting range **Factory setting**: Read only

[Com Scan Out2 val.] nC2

Com scanner output 2 value. Value of the second output word.

Identical to **[Com Scan Out1 val.] nC1** *(see page 144)*.

[Com Scan Out3 val.] nC3

Com scanner output 3 value. Value of the third output word.

Identical to **[Com Scan Out1 val.] nC1** *(see page 144)*.

[Com Scan Out4 val.] nC4

Com scanner output 4 value. Value of the fourth output word.

Identical to **[Com Scan Out1 val.] nC1** *(see page 144)*.

[Com Scan Out5 val.] nC5

Com scanner output 5 value. Value of the fifth output word.

Identical to **[Com Scan Out1 val.] nC1** *(see page 144)*.

[Com Scan Out6 val.] nC6

Com scanner output 6 value. Value of the sixth output word.

Identical to **[Com Scan Out1 val.] nC1** *(see page 144)*.

[Com Scan Out7 val.] nC7

Com scanner output 7 value. Value of the seventh output word.

Identical to **[Com Scan Out1 val.] nC1** *(see page 144)*.

[Com Scan Out8 val.] nC8

Com scanner output 8 value. Value of the eighth output word.

Identical to **[Com Scan Out1 val.] nC1** *(see page 144)*.

[Modbus HMI Diag] Π d H - Menu

Access

[Display] ➞ [Communication map] ➞ [Modbus HMI Diag]

About This Menu

Used for the Modbus serial communication port at the front of the control block (used by the Graphic Display Terminal)

[COM LED] Π d b 2

View of the Modbus HMI communication LED.

[Mdb NET frames] Π 2 C t

Terminal Modbus 2: number of processed frames.

Setting	Description
0...65,535	Setting range **Factory setting**: Read only

[Mdb NET CRC errors] Π 2 E C

Terminal Modbus 2: number of CRC errors.

Setting	Description
0...65,535	Setting range **Factory setting**: Read only

[Ethernet Emb Diag] nPE - Menu

Access

[Display] ➡ [Communication map] ➡ [Ethernet Emb Diag]

About This Menu

Refer to the Modbus TCP Ethernet-IP communication manual for a complete description.

NOTE: Refer to the Modbus TCP communication manual.

[MAC @] nACE

MAC address of the embedded Ethernet adapter.

Read-only parameter.

The address format is XX-XX-XX-XX-XX-XX.

[ETH emb Rx frames] ErXE

Ethernet embedded Rx frames counter.

Setting	Description
0...4,294,967,295	Setting range **Factory setting**: Read only

[ETH emb Tx frames] EtXE

Ethernet embedded Tx frames counter.

Setting	Description
0...4,294,967,295	Setting range **Factory setting**: Read only

[ETH emb error frames] EErE

Ethernet embedded error frames counter.

Setting	Description
0...4,294,967,295	Setting range **Factory setting**: Read only

[Ethernet Rate Data] ArdE ★

Actual data rate.

Setting	Code / Value	Description
[Auto]	Auto	Automatic
[10M. full]	10F	10 Mega bytes full-duplex
[10M. half]	10H	10 Mega bytes half-duplex
[100M. full]	100F	100 Mega bytes full-duplex
[100M. half]	100H	100 Mega bytes half-duplex

[Ethernet Module Diag] nEE - Menu

Access

[Display] ➡ [Communication map] ➡ [Ethernet Module Diag]

About This Menu

Following parameters are accessible if Ethernet-IP - Modbus TCP Module (VW3A3720, 721) has been inserted.

[MAC @] nAC o

MAC address of the Ethernet Modbus TCP fieldbus module.

Read-only parameter.

The address format is XX-XX-XX-XX-XX-XX.

[ETH opt Rx frames] ErX o

Ethernet embedded Rx frames counter.

Setting	Description
0...4,294,967,295	Setting range **Factory setting**: _

[ETH opt Tx frames] EtX o

Ethernet embedded Tx frames counter.

Setting	Description
0...4,294,967,295	Setting range **Factory setting**: _

[ETH opt error frames] EEr o

Ethernet embedded error frames counter.

Setting	Description
0...4,294,967,295	Setting range **Factory setting**: _

[Actual rate] Ard ★

Actual data rate.

Setting	Code / Value	Description
[Auto]	Auto	Automatic
[10M. full]	10F	10 Mega bytes full-duplex
[10M. half]	10H	10 Mega bytes half-duplex
[100M. full]	100F	100 Mega bytes full-duplex
[100M. half]	100H	100 Mega bytes half-duplex

[DeviceNet Diag] d V n - Menu

Access

[Display] ➡ [Communication map] ➡ [DeviceNet Diag]

About This Menu

Following parameters can be accessed if DeviceNet module (VW3A3609) has been inserted.

[Data rate used] b d r u ★

Data rate used by the fieldbus module.

Setting	Code / Value	Description
[Automatic]	A u t o	Automatic detection **Factory setting**
[125 Kbps]	1 2 5 K	125,000 Bauds
[250 Kbps]	2 5 0 K	250,000 Bauds
[500 Kbps]	5 0 0 K	500,000 Bauds

[Fieldbus Error] E P F 2

External detected error from fieldbus module.

Setting	Description
0...1	0: No Error 1: Profile error, verify the settings on **[Command and Reference]** C r P - menu.

[Fieldbus Com Interrupt] C n F

Fieldbus module communication interruption. Refer to the related fieldbus manual.

Setting	Description
0...65,535	0: No error 1: Error triggered by network 2: Duplicated MAC ID 3: FIFO Rx error 4: FIFO Tx error 5: CAN overrun 6: Transmission error 7: Bus off 8: IO timeout 9: Acknowledge error 10: DeviceNet network reset 11: IO connection deleted 12: No network power 13: IOC error

[Profibus Diag] P r b - Menu

Access

[Display] ➡ [Communication] ➡ [Profibus Diag]

About This Menu

Following parameters can be accessible if Profibus DP module (VW3A3607) has been inserted.

[Data rate used] b d r u ★

Data rate used by the fieldbus module.

Setting	Code / Value	Description
[Automatic]	A u t o	Automatic detection **Factory setting**
[9.6 Kbps]	9K6	9,600 Bauds
[19.2 Kbps]	19K2	19,200 Bauds
[93.75 Kbps]	93K7	93,750 Bauds
[187.5 Kbps]	187K	187,500 Bauds
[500 Kbps]	500K	500,000 Bauds
[1.5 Mbps]	1M5	1.5 MBauds
[3 Mbps]	3M	3 MBauds
[6 Mbps]	6M	6 MBauds
[12 Mbps]	12M	12 MBauds

[PPO profile used] P r F L ★

PPO profile in use.

Setting	Code / Value	Description
[Not configured]	u n C F	Not configured
[1]	1	PROFIdrive
[100]	100	Device specific
[101]	101	Device specific
[102]	102	Device specific
[106]	106	Device specific
[107]	107	Device specific

[DP Master Active] d P M A ★

Active master: 1 or 2.

Setting	Code / Value	Description
[MCL1]	1	Master 1 **Factory setting**
[MCL2]	2	Master 2

[Fieldbus Error] E P F 2

External detected error from fieldbus module.

[Fieldbus Com Interrupt] C n F

Fieldbus module communication interruption. Refer to the related fieldbus manual.

Setting	Description
0...65,535	0: No error 1: Network timeout for received requests 2: Identification error between the module and the master 3: Master in clear mode 4: Master class 2 timeout

[InternCom Error1] I L F 1

Option module communication interruption. Refer to the related fieldbus manual.

Setting	Description
0...65,535	Setting range **Factory setting**: Read only

[PROFINET Diag] P r n - Menu

Access

[Display] ➡ [Communication map] ➡ [PROFINET Diag]

About This Menu

Following parameters are accessible if PROFINET® module (VW3A3627) has been inserted.

[MAC @] M A C

MAC address of the PROFINET module.

read-only parameter.

The address format is XX-XX-XX-XX-XX-XX.

[PPO profile used] P r F L ★

PPO profile in use.

Setting	Code / Value	Description
[Not configured]	u n C G	Not configured
[1]	1	PROFIdrive
[100]	1 0 0	Device specific
[101]	1 0 1	Device specific
[102]	1 0 2	Device specific
[106]	1 0 6	Device specific
[107]	1 0 7	Device specific

[iPar Status] iPAE ★

PROFINET: IPAR service status.

Setting	Code / Value	Description
[Idle State]	idLE	Idle state
[Init]	in it	Initialization
[Configuration]	Conf	Configuration
[Ready]	rdy	Ready
[Operational]	oPE	Operational
[Not Configured]	uCFG	Not configured
[Unrecoverable Error]	urEC	Unrecoverable detected error

[iPar Error Code] iPAd ★

IPar detected error code.

Setting	Description
0...5	Setting range **Factory setting**: Read only

[DP Master Active] dPMA ★

Active master: 1 or 2.

Setting	Code / Value	Description
[MCL1]	1	Master 1 **Factory setting**
[MCL2]	2	Master 2

[Fieldbus Error] EPF2

External detected error from fieldbus module.

Setting	Description
0...13	0: No Error 9: Duplicate IP 10: No IP address 12: IPAR unconfigured 13: IPAR file unrecognized

[Fieldbus Com Interrupt] Cnf

Fieldbus module communication interruption.

Setting	Description
0...65,535	0: No error 1: Network timeout 2: Network overload 3: Ethernet carrier loss 17: IOC scanner error

[InternCom Error1] iLF1

Option module communication interruption.

Setting	Description
0...65,535	Setting range **Factory setting**: Read only

[Powerlink Diag] PWL - Menu

Access

[Display] ➡ [Communication map] ➡ [Powerlink Diag]

About This Menu

Following parameters can be access if Powerlink module (VW3A3619) has been inserted. Refer to the Powerlink communication manual for a complete description.

This menu contains read-only parameters.

[Mac @]] MAC

MAC address of the POWERLINK module.

The address format is XX-XX-XX-XX-XX-XX

[Fieldbus Error]] EPF2

External detected error from fieldbus module.

[Fieldbus Com Interrupt] CnF

Fieldbus module communication interruption. Refer to the related fieldbus manual.

Setting	Description
0...65,535	0: No network interruption 1: Unspecified interruption 17: Lost of link (2 ports) 23: Invalid Sync Manager configuration 25: No valid outputs 27: Sync Manager watchdog (1 port) 29: Invalid Sync Manager out configuration 30: Invalid Sync Manager in configuration 31: Invalid watchdog configuration 36: Invalid input mapping 37: Invalid output mapping 38: Inconsistent settings 43: No valid inputs and outputs 44: Sync error 80: EE no access 81: EE error 96: 0x60

[InternCom Error1] iLF1

Option module communication interruption.

Setting	Description
0...65,535	Setting range **Factory setting**: Read-only

[Command word image] CWi - Menu

Access

[Display] ➡ [Communication map] ➡ [Command word image]

About This Menu

Command word image.

[Modbus Cmd] CMd1

Command word image built with Modbus port source.

Identical to **[CMD Register]** CMd *(see page 139)*.

[CANopen Cmd] CMd2

Command word image built with CANopen® port source.

Identical to **[CMD Register]** CMd *(see page 139)*.

[COM. Module Cmd.] CMd3

Command word image built with fieldbus module source.

Identical to **[CMD Register]** CMd *(see page 139)*.

[Ethernet Embd cmd.] CMd5

Command word image built with Ethernet embedded source.

Identical to **[CMD Register]** CMd *(see page 139)*.

[Freq. ref. word map] rWI - Menu

Access

[Display] ➡ [Communication map] ➡ [Freq. ref. word map]

About This Menu

Frequency reference image.

[Modbus Ref Freq] LFr1

Frequency reference image built with Modbus port source (LFR_MDB).

Setting	Description
-32,767...32,767 Hz	Setting range **Factory setting**: 0.0 Hz

[CAN Ref Freq] LFr2

Frequency reference image built with CANopen® port source (LFR_CAN).

Setting	Description
-32,767...32,767 Hz	Setting range **Factory setting**: 0.0 Hz

[Com Module Ref Freq] LFr3

Frequency reference image built with fieldbus module source (LFR_COM).

Setting	Description
-32,767...32,767 Hz	Setting range **Factory setting**: 0.0 Hz

[Ethernet Embd Ref Freq] LFr5

Embedded Ethernet reference frequency.

Setting	Description
-32,767...32,767 Hz	Setting range **Factory setting**: 0.0 Hz

[CANopen map] C n M - Menu

Access

[Display] ➡ [Communication map] ➡ [CANopen map]

About This Menu

This menu is visible if a CANopen fieldbus module is present. Refer to the CANopen communication module manual.

[RUN LED] C o n

Bitfield: view of the CANopen® Run LED status.

[ERR LED] C A n E

Bitfield: view of the CANopen® error LED status.

[PDO1 image] P o 1 - Menu

Access

[Display] ➡ [Communication map] ➡ [CANopen map] ➡ [PDO1 image]

About This Menu

View of the Receive PDO1 and Transmit PDO1.

[Receive PDO1-1] r P 1 1★

First frame of the receive PDO1.

Setting	Description
0...65,535	Setting range **Factory setting**: Read only

[Receive PDO1-2] r P 1 2★

Second frame of the receive PDO1.

Setting	Description
0...65,535	Setting range **Factory setting**: Read only

[Receive PDO1-3] r P 1 3★

Third frame of the receive PDO1.

Setting	Description
0...65,535	Setting range **Factory setting**: Read only

[Receive PDO1-4] r P 1 4★

Fourth frame of the receive PDO1.

Setting	Description
0...65,535	Setting range **Factory setting**: Read only

[Transmit PDO1-1] tP11★

First frame of the transmit PDO1.

Setting	Description
0...65,535	Setting range **Factory setting**: Read only

[Transmit PDO1-2] tP12★

Second frame of the transmit PDO1.

Setting	Description
0...65,535	Setting range **Factory setting**: Read only

[Transmit PDO1-3] tP13★

Third frame of the transmit PDO1.

Setting	Description
0...65,535	Setting range **Factory setting**: Read only

[Transmit PDO1-4] tP14★

Fourth frame of the transmit PDO1.

Setting	Description
0...65,535	Setting range **Factory setting**: Read only

[PDO2 image] Po2- Menu

Access

[Display] ➡ [Communication map] ➡ [CANopen map] ➡ [PDO2 image]

About This Menu

View of the RPDO2 and TPDO2: same structure as **[PDO1 image]** Po1- *(see page 154)*.

[Receive PDO2-1] rP21★

First frame of the receive PDO2.

[Receive PDO2-2] rP22★

Second frame of the receive PDO2.

[Receive PDO2-3] rP23★

Third frame of the receive PDO2.

[Receive PDO2-4] rP24★

Fourth frame of the receive PDO2.

[Transmit PDO2-1] tP21★

First frame of the transmit PDO2.

[Transmit PDO2-2] tP22★

Second frame of the transmit PDO2.

[Transmit PDO2-3] tP23★

Third frame of the transmit PDO2.

[Transmit PDO2-4] tP24★

Fourth frame of the transmit PDO2.

[PDO3 image] PO3 - Menu

Access

[Display] ➡ **[Communication map]** ➡ **[CANopen map]** ➡ **[PDO3 image]**

About This Menu

View of the RPDO3 and TPDO3.

[Receive PDO3-1] rP31★

First frame of the receive PDO3.

Setting	Description
0...65,535	Setting range **Factory setting**: Read only

[Receive PDO3-2] rP32★

Second frame of the receive PDO3.

Identical settings as in **[Receive PDO3-1]** rP31.

[Receive PDO3-3] rP33★

Third frame of the receive PDO3.

Identical settings as in **[Receive PDO3-1]** rP31.

[Receive PDO3-4] rP34★

Fourth frame of the receive PDO3.

Identical settings as in **[Receive PDO3-1]** rP31.

[Transmit PDO3-1] tP31★

First frame of the transmit PDO3.

Setting	Description
0...65,535	Setting range **Factory setting**: Read only

[Transmit PDO3-2] tP32★

Second frame of the transmit PDO3.

Identical settings as in **[Transmit PDO3-1]** tP31.

[Transmit PDO3-3] tP33★

Third frame of the transmit PDO3.

Identical settings as in **[Transmit PDO3-1]** tP31.

[Transmit PDO3-4] tP34 ★

Fourth frame of the transmit PDO3.

Identical settings as in **[Transmit PDO3-1]** tP31.

[CANopen map] CnM - Menu

Access

[Display] ➡ [Communication map] ➡ [CANopen map]

About This Menu

CANopen® image.

[Canopen NMT state] nMtS

Drive NMT state of the CANopen® slave.

Settings	Code / Value	Description
[Boot]	boot	Bootup
[Stopped]	Stop	Stopped
[Operation]	oPE	Operational
[Pre-op]	PoPE	Pre-Operational

[Number of TX PDO] nbtP

Number of transmit PDO.

Setting	Description
0...65,535	Setting range **Factory setting**: Read only

[Number of RX PDO] nbrP

Number of receive PDO.

Setting	Description
0...65,535	Setting range **Factory setting**: Read only

[CANopen Error] ErCo

Error registry CANopen®.

Setting	Description
0...5	Setting range **Factory setting**: Read only

[RX Error Counter] rEC1

Number of receive error counter (not saved at power off).

Setting	Description
0...65,535	Setting range **Factory setting**: Read only

[TX Error Counter] tEC1

Number of transmit errors countered (not saved at power off).

Setting	Description
0...65,535	Setting range **Factory setting**: Read only

Section 7.12
[Data logging]

What Is in This Section?

This section contains the following topics:

Topic	Page
[Distributed logging] *dLo-* Menu	159
[Log dstrb prm select] *LdP-* Menu	160
[Distributed logging] *dLo-* Menu	162

[Distributed logging] dLo - Menu

Access

[Display] ➡ [Data logging] ➡ [Distributed logging]

About This Menu

This menu is used to store data following specific parameters.

The distributed logging function allows to log up to four parameter distributions at the same time. Each parameter storage is synchronized with the same sample time.

The result of this function gives the possibility to extract a bar graph with 10 bars (every 10% of the defined maximum value) to visualize the distribution for each of the four selected parameters.

NOTE: Any modification of the data logging function configuration will clear the data previously stored.

This function aims at extracting samples of data to store them. When available, these samples can be uploaded by other tools (SoMove and/or Webserver). Data logging meets the need to record and store data over time.

The drive can store the following data:

Type of [Data logging]	Description	[Data logging] storage: Automatic/Manual	Access
Drive identification	Drive identification data	Automatic, in **[Dashboard]** dSH- menu	SoMove Webserver
Even warning logging	Warning logging	Automatic, in **[Dashboard]** dSH- menu	SoMove Webserver
Even error logging	Error logging	Automatic, in **[Dashboard]** dSH- menu	SoMove Webserver
Distribution logging	4 Distribution data	Manual	Webserver
Energy logging	1 Energy logging data	Automatic, in **[Dashboard]** dSH- menu	SoMove Webserver

Activation

To activate **[Distributed logging]** dLo-:

- Select 1 to 4 data to store with **[Log dstrb prm select]** LdP-
- Set **[Log Distrib State]** LdEn to **[Start]** StArt

The logging starts as soon as the motor is running.

To stop logging, set **[Log Distrib State]** LdEn to **[Stop]** StoP.

[Log Distrib State] LdEn

Logging distribution state.

Setting	Code / Value	Description
[Stop]	StoP	Distribution logging disabled **Factory setting**
[Start]	StArt	Distribution logs only when the motor is started
[Always]	ALWAYS	Distribution logs all the time
[Reset]	rESEt	Distribution logging reset (configuration, data)
[Clear]	CLEAr	Clear distribution data
[Error]	Error	An error has been detected during distribution logging

[Log dstrb prm select] L d P - Menu

Access

[Display] ➡ [Data logging] ➡ [Distributed logging] ➡ [Log dstrb prm select]

About This Menu

This menu allows you to select up to 4 parameters for data logging. The peak value for each parameter is also stored.

[Log Distrib. Data 1] L d d 1

Logging distribution data 1.

Setting ❮❯	Code / Value	Description
[Distrib. Log. Disable]	n o	Distribution logging disable **Factory setting**
[Motor Frequency]	r F r	Motor frequency
[Motor Current]	L C r	Motor current
[Motor Speed]	S P d	Motor speed
[Motor Voltage]	u o P	Motor voltage
[Motor Mech. Power]	o P r W	Motor mechanical power
[Input Elec. Power]	I P r W	Input electrical power
[Output Elec. Power]	E P r W	Output electrical power
[Motor Torque]	o t r	Motor torque
[Mains Voltage]	u L n	Mains voltage
[DC BUS Voltage]	V b u S	DC BUS voltage
[PID Feedback]	r P F	PID feedback
[AI1 Th Value]	t H 1 V	Thermal sensor AI1
[AI3 Th Value]	t H 3 V	Thermal sensor AI3
[AI4 Th Value]	t H 4 V	Thermal sensor AI4
[AI5 Th Value]	t H 5 V	Thermal sensor AI5
[Drive Thermal State]	t H d	Drive thermal state
[Motor Therm State]	t H r	Motor thermal state
[Installation Flow]	F S 1 u	Installation flow
[Pump Flow]	F S 2 u	Pump flow
[Inlet Pressure Value]	P S 1 u	Inlet pressure sensor
[Outlet Pressure Value]	P S 2 u	Outlet pressure sensor
[Energy Consum. Ind.]	E C I	Energy consumption indicator
[Pump Efficiency]	E F Y	Pump efficiency
[Energy Perf. Ind.]	E P I	Energy performance indicator
[Mains Current]	I L n	Main estimated current
[Input Reactive Power]	I q r W	Re-active Electrical input power estimation
[Input Power factor]	P W F	Main power factor
[DBR Thermal State]	t H b	Braking thermal stat

[Log Distrib. Data 2] *L d d 2*

Logging distribution data 2.

Identical to **[Log Distrib. Data 1]** *L d d 1* *(see page 160)*.

[Log Distrib. Data 3] *L d d 3*

Logging distribution data 3.

Identical to **[Log Distrib. Data 1]** *L d d 1* *(see page 160)*.

[Log Distrib. Data 4] *L d d 4*

Logging distribution data 4.

Identical to **[Log Distrib. Data 1]** *L d d 1* *(see page 160)*.

[Distributed logging] dLo - Menu

Access

[Display] ➞ [Data logging] ➞ [Distributed logging]

About This Menu

NOTE: If a log data exceeds the user defined maximum values for log distribution data, this value will not be stored in the log distribution.

[Log Distrib Slp Time] LdSt

Logging distribution sample time.

Setting	Code / Value	Description
[200 ms]	200MS	200 ms
[1 second]	1S	1 s **Factory setting**
[2 second]	2S	2 s
[5 second]	5S	5 s

[Dist Max Val 1] LdM1

Maximum value of the log distribution data 1.

Setting	Description
10...65,535	Setting range **Factory setting**: Read only

[Dist Max Val 2] LdM2

Maximum value of the log distribution data 2.

Setting	Description
10...65,535	Setting range **Factory setting**: Read only

[Dist Max Val 3] LdM3

Maximum value of the log distribution data 3.

Setting	Description
10...65,535	Setting range **Factory setting**: Read only

[Dist Max Val 4] LdM4

Maximum value of the log distribution data 4.

Setting	Description
10...65,535	Setting range **Factory setting**: Read only

Chapter 8
[Complete settings] CSt -

Introduction

[Complete settings] CSt - menu presents all the settings related to drive functions for:

- Motor and drive configuration
- Application functions
- Monitoring functions

What Is in This Chapter?

This chapter contains the following sections:

Section	Topic	Page
8.1	Overview	165
8.2	**[Macro configuration]**	168
8.3	**[Motor parameters]** MPA - Menu	170
8.4	**[Define system units]**	211
8.5	**[Sensors assignment]**	215
8.6	**[Command and Reference]** CrP - Menu	238
8.7	**[Pump functions]** - **[Booster control]**	252
8.8	**[Pump functions]** - **[Level control]**	282
8.9	**[Pump functions]** - **[PID controller]**	303
8.10	**[Pump functions]** - **[Sleep/wakeup]**	323
8.11	**[Pump functions]** - **[Feedback monitoring]**	336
8.12	**[Pump functions]** - **[Pump characteristics]**	338
8.13	**[Pump functions]** - **[Sensorless flow estimation]**	345
8.14	**[Pump functions]** - **[dP/Head Correction]**	348
8.15	**[Pump functions]** - **[Pump start stop]**	350
8.16	**[Pump functions]** - **[Pipe fill]**	354
8.17	**[Pump functions]** - **[Friction loss compensation]**	359
8.18	**[Pump functions]** - **[Jockey pump]**	363
8.19	**[Pump functions]** - **[Priming pump ctrl]**	366
8.20	**[Pump functions]** - **[Flow limitation]**	370
8.21	**[Pump monitoring]** - **[Pumpcycle monitoring]**	373
8.22	**[Pump monitoring]** - **[Anti jam]**	375
8.23	**[Pump monitoring]** - **[Dry run Monit]**	381
8.24	**[Pump monitoring]** - **[Pump low flow Monit]**	384
8.25	**[Pump monitoring]** - **[Thermal monitoring]**	390
8.26	**[Pump monitoring]** - **[Inlet pressure monitoring]**	391
8.27	**[Pump monitoring]** - **[Outlet pressure monitoring]**	396
8.28	**[Pump monitoring]** - **[High flow monitoring]**	400
8.29	**[Fan]** - **[PID controller]**	404
8.30	**[Fan]** - **[Feedback monitoring]**	405
8.31	**[Fan]** - **[Jump frequency]**	406
8.32	**[Fan]**	407
8.33	**[Generic functions]** - **[Speed limits]**	410
8.34	**[Generic functions]** - **[Ramp]**	413
8.35	**[Generic functions]** - **[Ramp switching]**	416
8.36	**[Generic functions]** - **[Stop configuration]**	418

Section	Topic	Page
8.37	[Generic functions] - [Auto DC injection]	423
8.38	[Generic functions] - [Ref. operations]	426
8.39	[Generic functions] - [Preset speeds]	428
8.40	[Generic functions] - [+/- speed]	432
8.41	[Generic functions] - [Jump frequency]	435
8.42	[Generic functions] - [PID controller]	436
8.43	[Generic functions] - [Feedback mon.]	437
8.44	[Generic functions] - [Threshold reached]	438
8.45	[Generic functions] - [Mains contactor command]	440
8.46	[Generic functions] - [Output contactor cmd]	443
8.47	[Generic functions] - [Reverse disable]	446
8.48	[Generic functions] - [Torque limitation]	447
8.49	[Generic functions] - [Parameters switching]	449
8.50	[Generic functions] - [Stop after speed timeout]	457
8.51	[Generic functions] - [Active Front End]	459
8.52	[Generic monitoring]	460
8.53	[Input/Output] - [I/O assignment]	467
8.54	[Input/Output] - [DI/DQ]	480
8.55	[Input/Output] - [Analog I/O]	498
8.56	[Input/Output] - [Relay]	517
8.57	[Error/Warning handling]	529
8.58	[Maintenance]	559
8.59	[Cabinet I/O Function] CAbF -	568

Section 8.1
Overview

Application Control Mode

Introduction

There are five application control modes for the pump controller.

The application control mode is determined according to the selected channel and **[PID regul.]** PId mode.

This table presents the priority order of the control modes:

Priority	Channel	Function	Control mode
1	Local	FLo or tK	Local
2	Channel 2	Fr2	Override
3	Channel 1	PIM	PID manu
4	Channel 1	PISP	PID auto
5	Channel 1	Fr1 or Fr1b	Speed control

Application Control Functions

Application control functions are not all available in all modes.This table presents the availability of each function according to the selected mode:

Function	Channel 1			Channel 2	Local	Application status
	PId Manu	PId Auto	No PId			
Reference Frequency Source	PIM	PISP	Fr1 or Fr1b	Fr2	bMP or FLoC	–
Centrifugal Pump Start & Stop	Yes	Yes	Yes	Yes	Yes	–
Thermal Pump Monitoring	Yes	Yes	Yes	Yes	Yes	–
Anti-Jam	Yes	Yes	Yes	No	No	AJAM
Priming Pump Control	Yes	Yes	Yes	No	No	PrIM
Pipe Fill	Yes	Yes	Yes	No	No	FILL
Dry Run Pump Monitoring	Yes	Yes	Yes	No	No	–
Pump Low Flow Monitoring	Yes	Yes	Yes	No	No	–
Pumpcycle Monitoring	Yes	Yes	Yes	No	No	–
High Flow Monitoring	Yes	Yes	Yes	No	No	–
Flow Limitation	Yes	Yes	Yes	No	No	FLIM
Outlet Pressure Monitoring	Yes	Yes	Yes	No	No	–
Inlet Pressure Monitoring	Yes	Yes	Yes	No	No	CoMP
Process Control (PID)	Yes (Manu)	Yes (Auto)	Not configured	No	No	Auto MAnu
PID Controller	Yes	Yes	No	No	No	boost SLEEP
Sleep Wake-Up (Pressure Control)	No	Yes	No	No	No	–
Advanced sleep Checking (Pressure Control)	No	Yes	No	No	No	–
Friction Loss Compensation	No	Yes	No	No	No	–

1 Multi-pump Management is active for Booster or Level Control. When Booster and Level Control are both inactive, all auxiliary pumps are stopped.

Function	Channel 1			Channel 2	Local	Application status
	PId Manu	PId Auto	No PId			
Jockey Pump Control	No	Yes	No	No	No	–
PID Feedback Monitoring	No	Yes	No	No	No	–
Stop After Speed Timeout	Yes	No	Yes	Yes	Yes	SLEEP
Multi-pump Management	Yes (1)	Yes (1)	Yes (1)	–	–	–
Booster Control	Yes	Yes	Yes	No	No	–
Level Control	N/A	N/A	Yes	No	No	–
1 Multi-pump Management is active for Booster or Level Control. When Booster and Level Control are both inactive, all auxiliary pumps are stopped.						

Reference Channel Overview with PID Configured

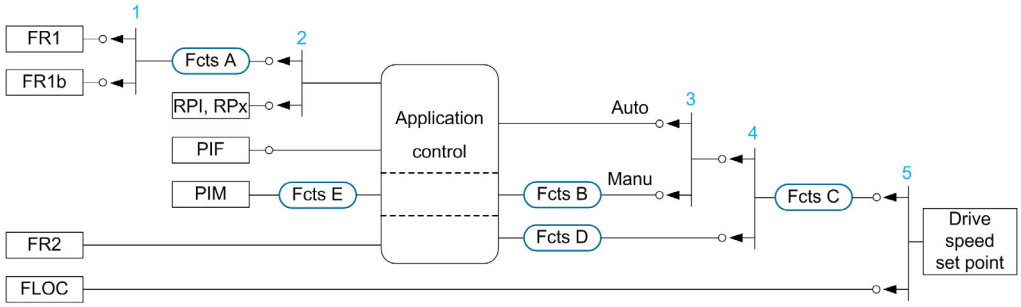

1 Commutation between channel 1 and channel 1b done with **[Acceleration 2]** rCb parameter
2 Choice of the process setpoint done with **[Intern PID Ref]** PII parameter
3 Manual function of the **[PID regul.]** PId, commutation done with **[Auto/Manual assign.]** PAu parameter
4 Choice between channel 1 and channel 2 done with **[Freq Switch Assign]** rFC parameter
5 Forced local mode activated by the function **[Forced Local Assign]** FLo or **[T/K]** FntK

Reference Channel Overview with PID Not Configured

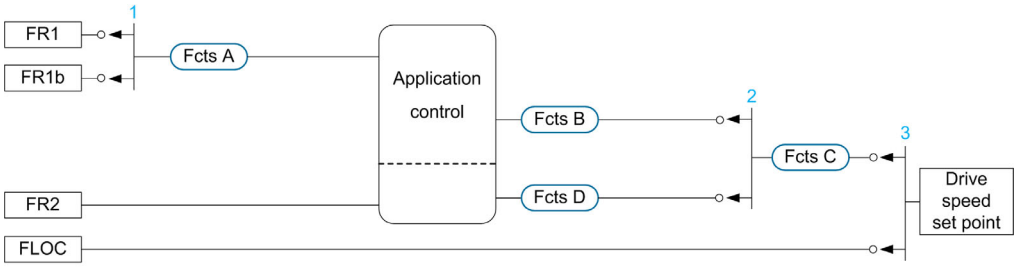

1 Commutation between channel 1 and channel 1b done with **[Acceleration 2]** rCb parameter
2 Choice between channel 1 and channel 2 done with **[Freq Switch Assign]** rFC parameter
3 Forced local mode activated by the function **[Forced Local Assign]** FLo or **[T/K]** FntK

Monitoring Functions

This table presents the function availability depending on the application status:

Application status	System monitoring functions			Pump monitoring functions (pump running)			
	Outlet low pressure	Outlet high pressure	High flow	Inlet low pressure	Pump low flow	Dry run	Pumpcycle
AJAM	No	No	No	No	No	No	Only 1 per cycle
Pr In	No	Yes	Yes	N/A or no	N/A	N/A	N/A
FILL	No	Yes	Yes	Yes	Yes	Yes	Each start
run, MAnu, Auto, FLIn, ConP	Yes	Yes	Yes	Yes	Yes	Yes	Each start

Application status	System monitoring functions			Pump monitoring functions (pump running)			
	Outlet low pressure	Outlet high pressure	High flow	Inlet low pressure	Pump low flow	Dry run	Pumpcycle
boost	Yes	Yes	Yes	Yes	Yes	Yes	N/A
SLEEP	Yes	Yes	Yes	N/A or no	N/A	N/A	N/A
JoCKEY	Yes	Yes	Yes	Yes (1)	Yes (1)	Yes (1)	Each start (1)
1 If the VSD pump is used as a jockey pump							

Section 8.2
[Macro configuration]

[Macro configuration] MCr - Menu

Access

[Complete settings] ➞ [Macro configuration]

About This Menu

This menu allows to select an application type in order to display only the parameters and menus useful for the selected application.

The application type selection should be done prior to the application settings.

Application compatibility

The following table shows the functions that can be configured depending of **[Application Selection]** APPt value.

Function	[Application Selection] APPt		
	[Generic Pump Control] GPMP	[Pump Level Control] LEVEL	[Pump Booster Control] boost
[Pump characteristics] PCr -	Yes	Yes	Yes
[Sensorless flow estimation] SFE -	Yes	Only for Lead Pump in architectures with 1 variable speed pump. Available for all pumps in multiple variable speed pump architectures.	
[Pump start stop] PSt -	Yes	Yes	Yes
[Thermal monitoring] tPP -	Yes	Yes	Yes
[Anti-jam monit] JAM -	Yes	Only for Lead Pump in architectures with 1 variable speed pump. Available for all pumps in multiple variable speed pump architectures.	
[Priming pump ctrl] PPC -	Yes	Only for Lead Pump in architectures with 1 variable speed pump. Available for all pumps in multiple variable speed pump architectures.	
[Pipe fill] PF i -	Yes	Not available	Yes
[Dry run Monit] dYr -	Yes	Only for Lead Pump in architectures with 1 variable speed pump. Available for all pumps in multiple variable speed pump architectures.	
[Pump low flow Monit] PLF -	Yes	Only for Lead Pump in architectures with 1 variable speed pump. Available for all pumps in multiple variable speed pump architectures.	
[Pumpcycle monitoring] CSP -	Yes	Only for Lead Pump in architectures with 1 variable speed pump if no Lead Pump Alternation configured. Available for all pumps in multiple variable speed pump architectures.	
[High flow monitoring] HFP -	Yes	Based on Installation Flow Sensor	
[Flow limitation] FLM -	Yes	Not available	Yes
[Outlet pressure monitoring] oPP -	Yes	Yes	Yes

Function	[Application Selection] APPt		
	[Generic Pump Control] GPMP	[Pump Level Control] LEVEL	[Pump Booster Control] boo St
[Inlet pressure monitoring]] IPP -	Yes	Only Warning can be configured	Yes
[PID controller] P id -	Yes	Not available	Required
[Sleep/Wakeup] SPW -	Yes	Not available	Yes
[Friction loss comp] FLC -	Yes	Not available	Yes
[Jockey pump] JKP -	Yes	Not available	Yes
[Feedback monitoring] FKM -	Yes	Not available	Yes
[Booster control] bSt -	Not available	Not available	Yes
[Level Control] LVL -	Not available	Yes	Not available

[Application Selection] APPt

Application selection.

⚠ WARNING

UNANTICIPATED EQUIPMENT OPERATION

If this parameter is changed, the functions that are active with the current configuration are disabled and the assignments of the inputs used in these functions are reset to the factory setting.

Verify that this change is compatible with the type of wiring used.

Failure to follow these instructions can result in death, serious injury, or equipment damage.

Setting	Code / Value	Description
[Generic Pump Control]	GPMP	Generic pump control application **Factory setting**
[Pump Level Control]	LEVEL	Pump level control application
[Pump Booster Control]	boo St	Pump booster control application
[Generic Fan Control]	FAn	Generic fan control application

Section 8.3
[Motor parameters] MPA - Menu

What Is in This Section?

This section contains the following topics:

Topic	Page
[Motor parameters] MPA - Menu	171
[Data] Mtd - Menu	174
[Motor tune] Mtu - Menu	181
[Motor monitoring] MoP - Menu	187
[Thermal monitoring] tPP - Menu	188
[Motor monitoring] MoP - Menu	195
[Motor control] drC - Menu	197
[Spd Loop Optimization] MCL - Menu	202
[Switching frequency] SWF - Menu	209

[Motor parameters] MPA - Menu

Access

[Complete settings] ➞ [Motor parameters]

About This Menu

For an application where less than 110% of overload is required
- Power rating of the drive could be equal to power rating of the motor
- Normal rating should be used

For an application where more that 110% of overload is required (up to 150%)
- Power rating of the drive should be greater than power rating of the motor
- High rating could be used to pre-adjust motor nameplate parameter

If high rating is selected, drive current limitation is extended to 1.5. In and maximum values of motor parameters linked to current and/or power are reduced. When switching from one to another selection, all the related parameters are set to their factory setting values.

In any case, the maximum current of the drive does not change. Setting the drive to high rating mode decreases the nominal values for the motor parameters. It means that for the same motor, an oversized drive is required in high rating mode.

ATV600 Motor Control Types

ATV600 drive embeds 5 motor control types which covers all the use cases depending of the application.

The following table shows the Motor Control types selection depending of the application needs:

Control	Motor Type	[Motor Control Type] Ctt selection	Description
Opened-Loop	Asynchronous motor	**[U/F VC Standard]** SStd	U/F vector control law
		[U/F VC 5pts] uF5	5 points U/F vector control law
		[U/F VC Quad.] uF9	U/F vector control law for variable torque applications (pumps and fans).
		[U/F VC Energy Sav.] ECo	U/F vector control optimized for energy saving.
	Synchronous motor	**[SYN_U VC]** SYnu	Permanent magnet control law for variable torque applications
	Reluctant motor	**[Rel. Mot.]** SrVC	Reluctant motor control law

Parameters List for Asynchronous Motors

The following table shows the minimum parameters list that needs to be configured for asynchronous motors depending of **[Motor Control Type]** Ctt selection:

NOTE: After setting these parameters, it is recommended to perform an **[Autotuning]** tun to optimize the performances.

Parameters	[U/F VC Standard] SStd	[U/F VC 5pts] uF5	[U/F VC Quad.] uF9	[U/F VC Energy Sav.] ECo
[Motor Standard] bFr	✓	✓	✓	✓
[Nominal Motor Power] nPr	✓	✓	✓	✓
[Nom Motor Voltage] unS	✓	✓	✓	✓
[Nom Motor Current] nCr	✓	✓	✓	✓
[Nominal Motor Freq] FrS	✓	✓	✓	✓
[Nominal Motor Speed] nSP	✓	✓	✓	✓

Parameters List for Synchronous or Reluctant Motors

The following table shows the minimum parameters list that needs to be configured for synchronous or reluctant motors depending of **[Motor Control Type]** *Ctt* selection:

NOTE: After setting these parameters, it is recommended to perform an **[Autotuning]** *tun* to optimize the performances

Parameters	[SYN_U VC] *SYnu*	[Rel. Mot.] *SrVC*
[Sync Nominal I] *nCrS*	✓	✓
[Nom SyncMotor Speed] *nSPS*	✓	✓
[Nom Motor torque] *tqS*	✓	✓
[Pole pairs] *PPnS*	✓	✓
[Angle setting type] *ASt*	✓	✓
[Autotuning Type] *tunt*	✓	✓ (1)
(1) **[Autotuning Type]** *tunt* can be changed to optimize the performances with Reluctant motors.		

[Dual Rating] *drt*

Dual rating state.

Setting	Code / Value	Description
[Normal Duty]	*nor NAL*	Normal rating, drive current limitation is 1.1 In **Factory setting**
[Heavy Duty]	*HIGH*	High rating, drive current limitation is 1.5 In

[Motor Control Type] *Ctt*

Motor control type.

NOTE: Select the motor control type before entering parameter values.

Setting	Code / Value	Description
[U/F VC Standard]	*Std*	Standard motor control type. For applications that require torque at low speed. This motor control type can be used for motors connected in parallel.
[U/F VC 5pts]	*uFS*	5–segment V/F profile: As **[U/F VC Standard]** *Std* profile but also supports the avoidance of resonance (saturation). 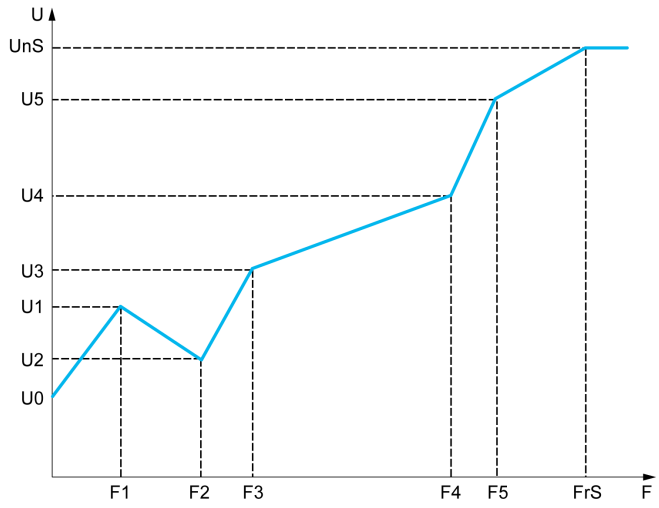 The profile is defined by the values of parameters *unS*, *FrS*, *u1* to *u5* and *F1* to *F5*. *FrS* > *F5* > *F4* > *F3* > *F2* > *F1* **NOTE:** U0 is the result of an internal calculation based on motor parameters and multiplied by *uFr* (%). U0 can be adjusted by modifying *uFr* value.

Setting	Code / Value	Description
[U/F VC Quad.]	uF9	Motor control type dedicated to variable torque applications, typically used for pumps and fans. **Factory setting**
[SYN_U VC]	SYnu	Open-loop synchronous motor: Motor control type specific for permanent magnet synchronous motors. This motor control type is used for variable torque applications.
[U/F VC Energy Sav.]	ECo	Specific motor control type optimized for energy saving. This motor control type automatically reduces the drive output current according to the motor load. This automatic current level adaptation allows energy saving for periods when load is kept to a minimum and preserves the drive performance up to full load.
[Rel. Mot.]	SrVc	Synchronous Reluctant Motor: Motor control type for reluctance motors. This motor control type is used for variable torque applications. If the maximum output current of the drive is not equal or greater than the motor current, this will lead to a lake of torque performances. **[Stall Monitoring]** StPC function helps to prevent a motor overload by monitoring the motor current and the speed rise time.

[Data] Mtd - Menu

Access

[Complete settings] ➡ [Motor parameters] ➡ [Motor data] ➡ [Data]

About This Menu

For synchronous motor parameters. Dedicated parameters can be accessed if **[Motor Control Type]** Ctt is set to **[SYN_U VC]** SYnu or **[Rel. Mot.]** SrVC.

⚠ WARNING

LOSS OF CONTROL

- Fully read and understand the manual of the connected motor.
- Verify that all motor parameters are correctly set by referring to the nameplate and the manual of the connected motor.

Failure to follow these instructions can result in death, serious injury, or equipment damage.

This table presents the steps to follow to set and optimize the motor data:

Step	Action
1	Enter the motor nameplate
2	Perform the **[Autotuning]** tun operation
3	Adjust **[Syn. EMF constant]** PHS to optimize the behavior: ● Start the motor at minimal stable frequency available on the machine (at minimum load). ● Check and note the **[% error EMF sync]** rdAE value: ❍ If the **[% error EMF sync]** rdAE value is lower than 0%, then **[Syn. EMF constant]** PHS may be increased. ❍ If the **[% error EMF sync]** rdAE value is upper than 0%, then **[Syn. EMF constant]** PHS may be reduced. **[% error EMF sync]** rdAE value should be closed to 0%. ● Stop the motor for modify **[Syn. EMF constant]** PHS in accordance with the value of the **[% error EMF sync]** rdAE (previously noted).

[Motor Standard] bFr ★

Motor standard.

This parameter modifies the presets of the following parameters:

- **[High Speed]** HSP
- **[Motor Freq Thd]** Ftd
- **[Nom Motor Voltage]** unS
- **[Nominal Motor Freq]** FrS
- **[Max Frequency]** tFr

NOTE: The factory setting value is changed to **[60 Hz NEMA]** for ATV630●●●S6● catalog numbers.

This parameter can be accessed if **[Motor Control Type]** Ctt is not set to **[SYN_U VC]** SYnu and **[Rel. Mot.]** SrVC.

Setting	Code / Value	Description
[50 Hz IEC]	50	IEC **Factory setting**
[60 Hz NEMA]	60	NEMA

[Nominal Motor Power] nPr ★

Nominal motor power.

This parameter can be accessed if **[Motor Control Type]** Ctt is not set to **[SYN_U VC]** SYnu and **[Rel. Mot.]** SrVC.

Rated motor power given on the nameplate, in kW if **[Motor Standard]** bFr is set to **[50Hz IEC]** 50, in HP if **[Motor Standard]** bFr is set to **[60Hz NEMA]** 60.

Setting	Description
According to drive rating	– **Factory setting**: according to the drive rating

[Nom Motor Voltage] unS ★

Nominal motor voltage.

This parameter can be accessed if **[Motor Control Type]** Ctt is not set to **[SYN_U VC]** SYnu and **[Rel. Mot.]** SrVC.

Rated motor voltage given on the nameplate.

Setting	Description
100...690 Vac	Setting range **Factory setting**: according to drive rating and **[Motor Standard]** bFr

[Nom Motor Current] nCr ★

Rated motor current given on the nameplate.

This parameter can be accessed if **[Motor Control Type]** Ctt is not set to **[SYN_U VC]** SYnu and **[Rel. Mot.]** SrVC.

Setting	Description
0.15...1.5 In (1)	Setting range **Factory setting**: according to drive rating and **[Motor Standard]** bFr
(1) Corresponding to the rated drive current indicated in the installation manual and on the drive nameplate.	

[Nominal Motor Freq] FrS ★

Nominal motor frequency.

This parameter can be accessed if **[Motor Control Type]** Ctt is not set to **[SYN_U VC]** SYnu and **[Rel. Mot.]** SrVC.

The factory setting is 50 Hz, or preset to 60 Hz if **[Motor Standard]** bFr is set to 60 Hz.

Setting	Description
40.0...500.0 Hz	Setting range **Factory setting**: 50 Hz

[Nominal Motor Speed] nSP ★

Nominal motor speed.

This parameter can be accessed if **[Motor Control Type]** Ctt is not set to **[SYN_U VC]** SYnu and **[Rel. Mot.]** SrVC.

If the nameplate indicates the synchronous speed and the slip in Hz or as a %, use any 1 of the formulas to calculate the rated speed:

- Nominal speed = Synchronous speed x $\frac{100 - \text{slip as a \%}}{100}$
- Nominal speed = Synchronous speed x $\frac{60 - \text{slip in Hz}}{60}$ (60 Hz motors)
- Nominal speed = Synchronous speed x $\frac{50 - \text{slip in Hz}}{50}$ (50 Hz motors).

Setting	Description
0...65,535 rpm	Setting range **Factory setting**: according to drive rating

[Motor Param Choice] MPC ★

Motor parameter choice.

This parameter can be accessed if **[Motor Control Type]** Ctt is not set to **[SYN_U VC]** SYnu and **[Rel. Mot.]** SrVC.

Setting	Code / Value	Description
[Mot Power]	nPr	Motor power **Factory setting**
[Mot Cosinus]	CoS	Motor cosinus

[Motor 1 Cosinus Phi] CoS ★

Nominal motor cosinus Phi.

This parameter can be accessed if **[Motor Control Type]** Ctt is not set to **[SYN_U VC]** SYnu and **[Rel. Mot.]** SrVC and if **[Motor param choice]** MPC is set to **[Mot Cosinus]** CoS.

Setting	Description
0.50...1.00	Setting range **Factory setting**: according to the drive rating

[AsyncMotor R Stator] rSA ★

Asynchronous motor stator resistance.

This parameter can be accessed if **[Access Level]** LAC is set to **[Expert]** EPr and if **[Motor Control Type]** Ctt is not set to **[SYN_U VC]** SYnu and **[Rel. Mot.]** SrVC.

The factory setting is replaced by the result of the autotuning operation if it has been performed.

Setting	Description
0...65,535 mOhm	Setting range **Factory setting**: 0 mOhm

[Magnetizing Current] ıdA ★

Magnetizing current.

This parameter can be accessed if **[Access Level]** LAC is set to **[Expert]** EPr and if **[Motor Control Type]** Ctt is not set to **[SYN_U VC]** SYnu and **[Rel. Mot.]** SrVC.

Setting	Description
0...6,553.5 A	Setting range **Factory setting**: 0 A

[AsyncMotor Lf Induct] LFA ★

Asynchronous motor leakage inductance.

This parameter can be accessed if **[Access Level]** LAC is set to **[Expert]** EPr and if **[Motor Control Type]** Ctt is not set to **[SYN_U VC]** SYnu and **[Rel. Mot.]** SrVC.

The factory setting is replaced by the result of the autotuning operation if it has been performed.

Setting	Description
0...655.35 mH	Setting range **Factory setting**: 0 mH

[Rotor Time Const] trA ★

Rotor time constant.

This parameter can be accessed if **[Access Level]** LAC is set to **[Expert]** EPr and if **[Motor Control Type]** Ctt is not set to **[SYN_U VC]** SYnu and **[Rel. Mot.]** SrVC.

Setting	Description
0...65,535 ms	Setting range **Factory setting**: 0 ms

[Sync Nominal I] nCrS ★

Sync motor nominal current.

This parameter can be accessed if **[Motor Control Type]** Ctt is set to **[SYN_U VC]** SYnu or **[Rel. Mot.]** SrVC.

Setting	Description
0.25...1.5 In (1)	Setting range **Factory setting**: according to the drive rating.
(1) Corresponding to the rated drive current indicated in the installation manual and on the drive nameplate.	

[Nom SyncMotor Speed] nSPS ★

Nominal synchronous motor speed.

This parameter can be accessed if **[Motor Control Type]** Ctt is set to **[SYN_U VC]** SYnu or **[Rel. Mot.]** SrVC.

Setting	Description
0...48,000 rpm	Setting range **Factory setting**: according to the drive rating.

[Nom Motor torque] tqS ★

Nominal motor torque

This parameter can be accessed if **[Motor Control Type]** Ctt is set to **[SYN_U VC]** SYnu or **[Rel. Mot.]** SrVC.

Setting	Description
0.1...6,553.5 Nm	Setting range **Factory setting**: according to the drive rating.

[Pole pairs] PPnS ★

Pole pairs.

This parameter can be accessed if **[Motor Control Type]** Ctt is set to **[SYN_U VC]** SYnu or **[Rel. Mot.]** SrVC.

Setting	Description
1...50	Setting range **Factory setting**: according to the drive rating.

[Angle setting type] AStt ★

Automatic angle setting type.

This parameter can be accessed if **[Motor Control Type]** Ctt is set to **[SYN_U VC]** SYnu or **[Rel. Mot.]** SrVC.

This function is used to align the rotor or to compute the angle of the rotor flux linked to permanent magnets in order to reduce torque jolt at start-up.

Setting	Code / Value	Description
[PSI align]	PSI	Pulse signal injection. Standard alignment mode, without rotor motion The angle measurement is realized by monitoring the stator current response to a pulse signal injection over a wide range of frequencies
[PSIO align]	PSIo	Pulse signal injection - optimized. Optimized alignment mode, without rotor motion Same operation as **[PSI align]** PSI is performed over an optimized range of frequencies The measurement time is reduced after the first run order or tune operation, even if the drive has been turned off **Factory setting**
[Rotational Current Injection]	rCI	Rotational current injection. Alignment mode with rotor motion. This alignment mode realizes the mechanical alignment of the rotor and the stator; it requires up to 4 s. The motor needs to be stopped and without resistive torque. **NOTE:** This setting is recommended when a sinus filter is used on the application. **NOTE:** For synchronous reluctant motor, it is recommended to use this setting.
[No align]	no	No alignment

[Syn. EMF constant] PHS ★

Synchronous motor EMF constant

This parameter can be accessed if **[Motor Control Type]** Ctt is set to **[SYN_U VC]** SYnu.

PHS adjustment allows you to reduce the current in operation without load.

Setting	Description
0...6,553.5 mV/rpm	Setting range **Factory setting**: 0 mV/rpm

[SyncMotor Stator R] rSAS ★

Calculated synchronous motor stator R.

Cold state stator resistance (per winding). The factory setting is replaced by the result of the tuning operation if it has been performed.

This parameter can be accessed if **[Access Level]** LAC is set to **[Expert]** EPr and if **[Motor Control Type]** Ctt is set to **[SYN_U VC]** SYnu or **[Rel. Mot.]** SrVC.

You can enter the value if you know it.

Setting	Description
0...65,535 mOhm	Setting range **Factory setting**: 0 mOhm

[Autotune L d-axis] Ld S ★

Autotune L d-axis.

Axis "d" stator inductance in mH (per phase).

This parameter can be accessed if **[Access Level]** LAC is set to **[Expert]** EPr and if **[Motor Control Type]** Ctt is set to **[SYN_U VC]** SYnu or **[Rel. Mot.]** SrVC.

On motors with smooth poles **[Autotune L d-axis]** Ld S = **[Autotune L q-axis]** Lq S = Stator inductance L.

The factory setting is replaced by the result of the autotuning operation if it has been performed.

Setting	Description
0...655.35 mH	Setting range **Factory setting**: 0

[Autotune L q-axis] Lq S ★

Autotune L q-axis.

Axis "q" stator inductance in mH (per phase).

This parameter can be accessed if **[Access Level]** LAC is set to **[Expert]** EPr and if **[Motor Control Type]** Ctt is set to **[SYN_U VC]** SYnu or **[Rel. Mot.]** SrVC.

On motors with smooth poles **[Autotune L d-axis]** Ld S = **[Autotune L q-axis]** Lq S = Stator inductance L.

The factory setting is replaced by the result of the autotuning operation if it has been performed.

Setting	Description
0...655.35 mH	Setting range **Factory setting**: 0

[Sync Nominal Freq] FrSS ★

Synchronous motor nominal frequency.

Nominal motor frequency for synchronous motor in Hz unit. Automatically updated according to **[Nom SyncMotor Speed]** nSPS and **[Pole pairs]** PPnS data.

This parameter can be accessed if **[Access Level]** LAC is set to **[Expert]** EPr and if **[Motor Control Type]** Ctt is set to **[SYN_U VC]** SYnu or **[Rel. Mot.]** SrVC.

Setting	Description
10.0...500.0 Hz	Setting range **Factory setting**: nSPS x PPnS / 60

[PSI Align Curr Max] nCr ★

Maximum current of PSI alignment.

Current level in % of **[Sync Nominal I]** nCrS for **[PSI align]** PS1 and **[PSI Oalign]** PS10 angle shift measurement modes. This parameter has an impact on the inductor measurement.

This parameter can be accessed if **[Access Level]** LAC is set to **[Expert]** EPr and if **[Motor Control Type]** Ctt is set to **[SYN_U VC]** SYnu or **[Rel. Mot.]** SrVC.

This current must be equal to or higher than the maximum current level of the application; otherwise an instability may occur.

If **[PSI Align Curr Max]** nCr is set to **[AUTO]** Auto, **[PSI Align Curr Max]** nCr is adapted by the drive according to the motor data settings.

Setting	Description
[AUTO] Auto...300%	Setting range **Factory setting**: **[AUTO]** Auto

NOTE: In case of instability, **[PSI Align Curr Max]** nCr should be increased by steps up to obtain the requested performances.

[Current Filter Time] CrtF ★

Filter time of the current.

This parameter can be accessed if **[Access Level]** LAC is set to **[Expert]** EPr.

Setting	Description
[AUTO] Auto...100.0 ms	Setting range **Factory setting**: **[AUTO]** Auto

[Currents Filter] CrFA ★

Internal currents filter time.

This parameter can be accessed if **[Access Level]** LAC is set to **[Expert]** EPr.

Setting	Description
0.0...100.0 ms	Setting range **Factory setting**: According to drive rating

[% error EMF sync] rdAE ★

Ratio D-axis current.

This parameter can be accessed if **[Motor Control Type]** Ctt is set to **[SYN_U VC]** SYnu.

Use **[% error EMF sync]** rdAE to adjust **[Syn. EMF constant]** PHS, **[% error EMF sync]** rdAE should be closed to 0%.

If the **[% error EMF sync]** rdAE value is:

- Lower than 0%:**[Syn. EMF constant]** PHS may be increased.
- Upper than 0%: **[Syn. EMF constant]** PHS may be reduced.

For the all steps to follow to optimize the synchronous motor settings *(see page 174)*.

Setting	Description
0.0...6,553.5%	Setting range **Factory setting**: –

[Motor tune] Mtu - Menu

Access

[Complete settings] ➔ [Motor parameters] ➔ [Motor data] ➔ [Motor tune]

[Autotuning] tun

⚠ WARNING
UNEXPECTED MOVEMENT Autotuning moves the motor in order to tune the control loops. ● Only start the system if there are no persons or obstructions in the zone of operation. **Failure to follow these instructions can result in death, serious injury, or equipment damage.**

During autotuning, noise development and oscillations of the system are normal.

If **[Autotuning Type]** tunt is set to **[Standard]** Std, during autotuning, the motor makes small movements.

If **[Autotuning Type]** tunt is set to **[Rotation]** rot, during autotuning, the motor runs at half of its nominal frequency.

In any case, the motor has to be stopped before performing a tune operation. Verify that the application does not make the motor turn during the tune operation.

If **[Motor control type]** Ctt is set to **[Rel. Mot.]** SrVC, the drive operates the mechanical alignment of the motor (**[Angle setting type]** ASt set to **[Rotational Current Injection]** rCi) prior to start the autotuning.

The tune operation optimizes:
- The motor performances at low speed.
- The estimation of the motor torque.
- The accuracy of the estimation of the process values in sensorless operation and monitoring.

Autotuning is only performed if no stop command has been activated. If a “freewheel stop” or “fast stop” function has been assigned to a digital input, this input must be set to 1 (active at 0).

Autotuning takes priority over any run or prefluxing commands, which will be taken into account after the autotuning sequence.

If autotuning has detected an error, the drive always displays **[No action]** no and, depending on the configuration of **[Tuning Error Resp]** tnL, may switch to **[Autotuning]** tun detected error mode.

Autotuning may last for several seconds. Do not interrupt the process. Wait for the Graphic Display Terminal to change to **[No action]** no.

NOTE: The motor thermal state has a significant influence on the tuning result. Always perform a motor tuning with the motor stopped and cold. Verify that the application does not have the motor operate during a tuning operation.

To redo a motor tuning, wait that it is stopped and cold. Set first **[Autotuning]** tun to **[Erase Autotuning]** CLr, then redo the motor tuning.

The use of the motor autotuning without doing a **[Erase Autotuning]** CLr first is used to get the thermal state estimation of the motor.

The cable length has an influence on the tune result. If the wiring is modified, it is necessary to redo the tune operation.

Setting	Code / Value	Description
[No action]	nO	Autotuning not in progress **Factory setting**
[Apply Autotuning]	YES	Autotuning is performed immediately if possible, then the parameter automatically changes to **[No action]** nO. If the drive state does not allow the tune operation immediately, the parameter changes to **[No]** nO and the operation must be done again.
[Erase Autotuning]	CLr	The motor parameters measured by the autotuning function are reset. The default motor parameter values are used to control the motor. **[Autotuning Status]** tUS is set to **[Not done]** tAb.

[Autotuning Status] tUS

Autotuning status.

This parameter is not saved at drive power-off. It shows the autotuning status since the last power-on (for information only, cannot be modified).

Setting	Code / Value	Description
[Not done]	tAb	The autotuning is not done **Factory setting**
[Pending]	PEnd	The autotuning has been requested but not yet performed
[In Progress]	PrOG	The autotuning is in progress
[Error]	FAIL	The autotuning has detected an error
[Done]	donE	The motor parameters measured by the autotuning function are used to control the motor

[Auto tuning usage] tUnU ★

Auto tune usage.

This parameter shows the way used to modify the motor parameters according to its estimated thermal state.

This parameter can be accessed if **[Access Level]** LAC is set to **[Expert]** EPr.

Setting	Code / Value	Description
[No]	nO	No thermal state estimation **Factory setting**
[Therm Mot]	tM	Statoric thermal state estimation based on nominal current and current consumed by the motor.

[Tuning Error Resp] tnL ★

Response to autotune error.

This parameter can be accessed if **[Access Level]** LAC is set to **[Expert]** EPr.

Setting	Code / Value	Description
[Ignore]	nO	Detected error ignored
[Freewheel Stop]	YES	Freewheel stop **Factory setting**

[Autotuning Assign] tUL ★

Autotuning input assignment.

The autotuning is performed when the assigned input or bit changes to 1.

This parameter can be accessed if **[Access Level]** LAC is set to **[Expert]** EPr.

NOTE: The autotuning causes the motor to start up.

Setting	Code / Value	Description
[Not Assigned]	nO	Not assigned **Factory setting**
[DI1]...**[DI6]**	LI1...LI6	Digital input DI1...DI6
[DI11]...**[DI16]**	LI11...LI16	Digital input DI11...DI16 if VW3A3203 I/O extension module has been inserted
[CD00]...**[CD10]**	CD00...CD10	Virtual digital input CMD.0...CMD.10 in **[I/O profile]** IO configuration
[CD11]...**[CD15]**	CD11...CD15	Virtual digital input CMD.11...CMD.15 regardless of configuration
[C101]...**[C110]**	C101...C110	Virtual digital input CMD1.01...CMD1.10 with integrated Modbus Serial in **[I/O profile]** IO configuration
[C111]...**[C115]**	C111...C115	Virtual digital input CMD1.11...CMD1.15 with integrated Modbus Serial regardless of configuration
[C201]...**[C210]**	C201...C210	Virtual digital input CMD2.01...CMD2.10 with CANopen® fieldbus module in **[I/O profile]** IO configuration
[C211]...**[C215]**	C211...C215	Virtual digital input CMD2.11...CMD2.15 with CANopen® fieldbus module regardless of configuration
[C301]...**[C310]**	C301...C310	Virtual digital input CMD3.01...CMD3.10 with a fieldbus module in **[I/O profile]** IO configuration
[C311]...**[C315]**	C311...C315	Virtual digital input CMD3.11...CMD3.15 with a fieldbus module regardless of configuration
[C501]...**[C510]**	C501...C510	Virtual digital input CMD5.01...CMD5.10 with integrated Ethernet in **[I/O profile]** IO configuration
[C511]...**[C515]**	C511...C515	Virtual digital input CMD5.11...CMD5.15 with integrated Ethernet regardless of configuration

[Autotuning Type] tUnt ★

Autotuning type.

This parameter can be accessed if:

- **[Access Level]** LAC is set to **[Expert]** EPr, and
- **[Motor control type]** Ctt is set to **[Rel. Mot.]** SrVC.

Setting ❮❯	Code / Value	Description
[Standard]	Std	Standard autotune **Factory setting**
[Rotation]	rot	Autotune in rotation. This selection can be used for: ● Optimization of energy saving ● Application with low inertia ● Application that requires high motor control performances. With this selection, less than 30% of resistive load must be present on the application to optimize the autotuning result. During the autotune sequence, the motor will be started to half of its nominal frequency during maximum 45 seconds.

[Automatic autotune] AUt ★

Automatic autotune.

⚠ WARNING

UNEXPECTED MOVEMENT

If this function is activated, autotuning is performed each time the drive is switched on.

- Verify that activating this function does not result in unsafe conditions.

Failure to follow these instructions can result in death, serious injury, or equipment damage.

The motor must be stopped when switching on the drive.

This parameter can be accessed if **[Access Level]** LAC is set to **[Expert]** EPr.

Setting	Code / Value	Description
[No]	nO	Function deactivated **Factory setting**
[Yes]	YES	A tuning is automatically done at each power-up

[Tune Selection] StUn ★

Tune selection.

Setting	Code / Value	Description
[Default]	tAb	The default motor parameter values are used to control the motor **Factory setting**
[Measure]	MEAS	The values measured by the autotuning function are used to control the motor
[Custom]	CuS	The values manually set are used to control the motor

[Saliency mot. state] SMot ★

Information on synchronous motor saliency.

This parameter can be accessed if :

- **[Access Level]** LAC is set to **[Expert]** EPr, and
- **[Tune Selection]** StUn is set to **[Measure]** MEAS, and
- **[Motor control type]** Ctt is set to:
  - **[SYN_U VC]** SYnU, or
  - **[Rel. Mot.]** SrVC.

This parameter helps to optimization of motor control performances for synchronous motors.

Setting	Code / Value	Description
[No]	nO	Tune not done
[Low salient]	LLS	[Low saliency level. Recommended configuration: **[Angle setting type]** ASt = **[PSI align]** PSI or **[PSIO align]** PSIO and **[HF inj. activation]** HFI = **[No]** nO
[Med salient]	MLS	Medium saliency level. **[Angle setting type]** ASt = **[SPM align]** SPMA and **[HF inj. activation]** HFI = **[Yes]** YES can be used to improve performances
[High salient]	HLS	High saliency level. **[Angle setting type]** ASt = **[IPM align]** IPMA and **[HF inj. activation]** HFI = **[Yes]** YES can be used to improve performances.

[Autotuning Lvl Of Current] tCr ★

Tune current ratio.

This parameter can be accessed if **[Access Level]** LAC is set to **[Expert]** EPr.

This parameter shows the level of current applied to the motor during auto tuning, in percent of the drive nominal current.

This parameter has an impact on the inductor measurement.

Setting	Description
[Auto] AUto...300%	**Factory setting: [Auto]** AUto

[Angle setting type] ASt ★

Automatic angle setting type.

This parameter can be accessed if **[Motor Control Type]** Ctt is set to **[SYN_U VC]** SYnU or **[Rel. Mot.]** SrVC..

This function is used to align the rotor or to compute the angle of the rotor flux linked to permanent magnets in order to reduce torque jolt at start-up.

Setting	Code / Value	Description
[PSI align]	PSI	Pulse signal injection. Standard alignment mode, without rotor motion The angle measurement is realized by monitoring the stator current response to a pulse signal injection over a wide range of frequencies
[PSIO align]	PSIo	Pulse signal injection - optimized. Optimized alignment mode, without rotor motion Same operation as **[PSI align]** PSI is performed over an optimized range of frequencies The measurement time is reduced after the first run order or tune operation, even if the drive has been turned off **Factory setting**
[Rotational Current Injection]	rCI	Rotational current injection. Alignment mode with rotor motion. This alignment mode realizes the mechanical alignment of the rotor and the stator; it requires up to 4 s. The motor needs to be stopped and without resistive torque. **NOTE:** This setting is recommended when a sinus filter is used on the application. **NOTE:** For synchronous reluctant motor, it is recommended to use this setting.
[No align]	no	No alignment

[PSI Align Curr Max] nCr ★

Maximum current of PSI alignment.

Current level in % of **[Sync Nominal I]** nCrS for **[PSI align]** PSI and **[PSI Oalign]** PSIo angle shift measurement modes. This parameter has an impact on the inductor measurement.

This parameter can be accessed if **[Access Level]** LAC is set to **[Expert]** EPr and if **[Motor Control Type]** Ctt is set to **[SYN_U VC]** SYnU or **[Rel. Mot.]** SrVC.

This current must be equal to or higher than the maximum current level of the application; otherwise an instability may occur.

If **[PSI Align Curr Max]** nCr is set to **[AUTO]** AUto, **[PSI Align Curr Max]** nCr is adapted by the drive according to the motor data settings.

Setting	Description
[AUTO] AUto...300%	Setting range **Factory setting**: **[AUTO]** AUto

[Rotational Current Level] rCLL ★

Rotational current level.

This parameter can be accessed if **[Angle setting type]** ASt is set to **[Rotational Current Injection]** rCI.

The current level should be set according to the torque required during the alignment operation.

Setting	Description
10...300%	Setting range, as a percentage of the nominal motor current **Factory setting**: 75%

[Rotational Torque Current] rtC ★

Rotational torque current.

This parameter can be accessed if **[Angle setting type]** ASt is set to **[Rotational Current Injection]** rCI and, **[Access Level]** LAC is set to **[Expert]** EPr.

Setting	Description
0...300%	Setting range **Factory setting**: 0%

[RCI Max Freq] rCSP ★

RCI maximum output frequency.

This parameter can be accessed if **[Angle setting type]** ASt is set to **[Rotational Current Injection]** rCI and, **[Access Level]** LAC is set to **[Expert]** EPr.

Setting	Description
[AUTO] Auto...500.0 Hz	Setting range **Factory setting**: **[AUTO]** Auto

[RCI Round Nb] rCrP ★

RCI round number.

This parameter can be accessed if **[Angle setting type]** ASt is set to **[Rotational Current Injection]** rCI and, **[Access Level]** LAC is set to **[Expert]** EPr.

Setting	Description
[AUTO] Auto...32767	Setting range **Factory setting**: **[AUTO]** Auto

[RCI With Transformer] rCIr ★

RCI alignment with transformer.

This parameter can be accessed if **[Angle setting type]** ASt is set to **[Rotational Current Injection]** rCI and, **[Access Level]** LAC is set to **[Expert]** EPr.

Setting	Code / Value	Description
[No]	no	Function inactive **Factory setting**
[Yes]	YES	Function active

[Motor monitoring] MoP - Menu

Access

[Complete settings] ➞ [Motor parameters] ➞ [Motor monitoring]

[Motor Th Current] ItH

Motor thermal monitoring current to be set to the rated current indicated on the nameplate.

Setting	Description
0.12...1.1 In(1)	Setting range **Factory setting**: According to drive rating
(1) Corresponding to the rated drive current indicated in the installation manual and on the drive nameplate.	

[Motor Thermal Mode] tHt

Motor thermal monitoring mode.

NOTE: An error is detected when the thermal state reaches 118% of the rated state and reactivation occurs when the state falls back below 100%.

Setting	Code / Value	Description
[No]	nO	No thermal monitoring
[Self cooled]	ACL	Self ventilated motor **Factory setting**
[Force-cool]	FCL	Fan-cooled motor

[MotorTemp ErrorResp] oLL

Overload error response.

Setting	Code / Value	Description
[Ignore]	nO	Detected error ignored
[Freewheel Stop]	YES	Free wheel **Factory setting**

[Thermal monitoring] tPP - Menu

Access

[Complete settings] ➡ [Motor parameters] ➡ [Motor monitoring] ➡ [Thermal monitoring]

About This Menu

The thermal monitoring function helps to prevent against high temperature by monitoring the real temperature by the drive.

PTC, PT100, PT1000, and KTY84 thermal probes are supported by this function.

The function gives the possibility to manage 2 levels of monitoring:
- A Warning level: the drive triggers an event without stopping the application.
- An Error level: the drive triggers an event and stops the application.

The thermal probe is monitored for the following detected error:
- Overheating
- Probe break (loss of signal)
- Probe short-circuit

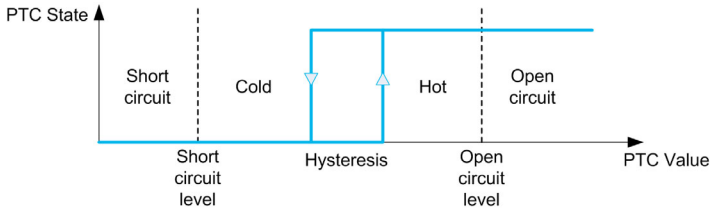

Activation

[AIx Th Monitoring] tHX5 allows you to activate the thermal monitoring on the related analog input:
- **[No]** nO: the function is disabled
- **[Yes]** YES: the thermal monitoring is enabled on the related AIx.

Type of Thermal Probe Selection

[AIx Type] AIXt allows you to select the type of thermal sensor(s) connected on the related analog input:
- **[No]** nO: no sensor
- **[PTC Management]** PtC: one to six PTC (in serial) is used
- **[KTY]** Kty: 1 KTY84 is used
- **[PT100]** 1Pt2: 1 PT100 connected with two wires is used
- **[PT1000]** 1Pt3: 1 PT1000 connected with two wires is used
- **[PT100 in 3 wires]** 1Pt23: 1 PT100 connected with three wires is used (AI4 & AI5 only)
- **[PT1000 in 3 wires]** 1Pt33: 1 PT1000 connected with three wires is used (AI4 & AI5 only)
- **[3 PT100]** 3Pt2: 3 PT100 connected with two wires is used
- **[3 PT1000]** 3Pt3: 3 PT1000 connected with two wires is used
- **[3 PT100 in 3 wires]** 3Pt23: 3 PT100 connected with three wires is used (AI4 & AI5 only)
- **[3 PT1000 in 3 wires]** 3Pt33: 3 PT1000 connected with three wires is used (AI4 & AI5 only)

2-wire thermal probes are supported on analog input 2 to analog input 5.

3-wire thermal probes are supported on analog input 4 and analog input 5. These inputs are available with the I/O extension option module.

If the probe is far from the drive, the 3-wire connection is recommended as compared to a 2-wire connection.

NOTE: In case of 3 serial probes, the drive monitors the average probe values.

Wiring for PT100 and PT1000 Probes

For 2-wire probes, the following wirings are possible:

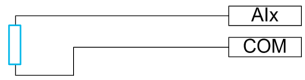

For 3-wire probes, the following wirings are possible:

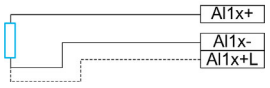

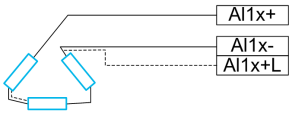

[AI2 Th Monitoring] tH2S

Activation of the thermal monitoring on AI2.

Setting	Code / Value	Description
[No]	nO	No **Factory setting**
[YES]	YES	Yes

[AI2 Type] AI2t ★

AI2 assignment.

This parameter can be accessed if **[AI2 Th Monitoring]** tH2S is not set to **[No]** nO.

Setting	Code / Value	Description
[Voltage]	10U	0-10 Vdc **Factory setting**
[Current]	0A	0-20 mA
[PTC Management]	PtC	1 to 6 PTC (in serial)
[KTY]	KtY	1 KTY84
[PT1000]	1Pt3	1 PT1000 connected with 2 wires
[PT100]	1Pt2	1 PT100 connected with 2 wires
[Water Prob]	LEuEL	Water level
[3PT1000]	3Pt3	3 PT1000 connected with 2 wires
[3PT100]	3Pt2	3 PT100 connected with 2 wires

[AI2 Th Error Resp] tH2b ★

Thermal monitoring response to a detected error for AI2.

This parameter can be accessed if **[AI2 Type]** AI2t is not set to

- **[Voltage]** 10U, or
- **[Current]** 0A.

Setting	Code / Value	Description
[Ignore]	nO	Detected error ignored
[Freewheel Stop]	YES	Freewheel stop
[Per STT]	STT	Stop according to **[Type of stop]** STT parameter but without an error triggered after stop
[Fallback Speed]	LFF	Change to fallback speed, maintained as long as the detected error persists and the command has not been removed (1)
[Ramp stop]	rMP	Stop on ramp **Factory setting**

[AI2 Th Error Level] tH2F ★

Error detection level for AI2.

This parameter can be accessed if **[AI2 Type]** AI2t is not set to:

- **[Voltage]** 10U, or
- **[Current]** 0A, or
- **[PTC Management]** PTC.

Setting ( )	Description
-15.0...200.0°C	Setting range **Factory setting**: 110.0°C

[AI2 Th Warn Level] tH2A ★

Warning level for AI2.

This parameter can be accessed if **[AI2 Type]** AI2t is not set to:

- **[Voltage]** 10U, or
- **[Current]** 0A, or
- **[PTC Management]** PTC.

Setting ( )	Description
-15.0...200.0°C	Setting range **Factory setting**: 90.0°C

[AI2 Th Value] tH2V ★

AI2 thermal value.

This parameter can be accessed if **[AI2 Type]** AI2t is not set to:

- **[Voltage]** 10U, or
- **[Current]** 0A, or
- **[PTC Management]** PTC.

Setting	Description
-15.0...200.0°C	Setting range **Factory setting**: _

[AI3 Th Monitoring] tH3S

Activation of the thermal monitoring on AI3.

Setting	Code / Value	Description
[No]	nO	No **Factory setting**
[YES]	YES	Yes

[AI3 Type] AI3t ★

AI3 assignment.

This parameter can be accessed if **[AI3 Th Monitoring]** tH3S is not set to **[No]** nO.

Identical to **[AI2 Type]** AI2t *(see page 189)* with factory setting: **[Current]** 0A.

[AI3 Th Error Resp] tH3b ★

Thermal monitoring response to a detected error for AI3.

This parameter can be accessed if **[AI3 Type]** AI3t is not set to:

- **[Voltage]** 10U, or
- **[Current]** 0A, or

Setting	Code / Value	Description
[Ignore]	nO	Detected error ignored
[Freewheel Stop]	YES	Freewheel stop
[Per STT]	StT	Stop according to **[Type of stop]** StT parameter but without an error triggered after stop
[Fallback Speed]	LFF	Change to fallback speed, maintained as long as the detected error persists and the command has not been removed (1)
[Ramp stop]	rMP	Stop on ramp **Factory setting**

[AI3 Th Error Level] tH3F ★

Error detection level for AI3.

This parameter can be accessed if **[AI3 Type]** AI3t is not set to:

- **[Voltage]** 10U, or
- **[Current]** 0A, or
- **[PTC Management]** PtC.

Setting ( )	Description
-15.0...200.0°C	Setting range **Factory setting**: 110.0°C

[AI3 Th Warn Level] tH3A ★

Warning level for AI3.

This parameter can be accessed if **[AI3 Type]** AI3t is not set to:

- **[Voltage]** 10U, or
- **[Current]** 0A, or
- **[PTC Management]** PtC.

Setting ( )	Description
-15.0...200.0°C	Setting range **Factory setting**: 90.0°C

[AI3 Th Value] tH3V ★

AI3 thermal value.

This parameter can be accessed if **[AI3 Type]** A I3t is not set to:

- **[Voltage]** 10U, or
- **[Current]** 0A, or
- **[PTC Management]** PTC.

Setting	Description
-15.0...200.0°C	Setting range **Factory setting**: _

[AI4 Th Monitoring] tH4S ★

Activation of the thermal monitoring on AI4.

This parameter can be accessed if VW3A3203 I/O extension module has been inserted.

Setting	Code / Value	Description
[No]	nO	No **Factory setting**
[YES]	YES	Yes

[AI4 Type] AI4t ★

AI4 assignment.

This parameter can be accessed if **[AI4 Th Monitoring]** tH4S is not set to **[No]** nO.

Setting	Code / Value	Description
[Voltage]	10U	0-10 Vdc
[Current]	0A	0-20 mA
[Voltage +/-]	n 10U	-10/+10 Vdc **Factory setting**

[AI4 Th Error Resp] tH4b ★

Thermal monitoring response to a detected error for AI4.

This parameter can be accessed if **[AI4 Type]** A I4t is not set to

- **[Voltage]** 10U, or
- **[Current]** 0A.

Setting	Code / Value	Description
[Ignore]	nO	Detected error ignored
[Freewheel Stop]	YES	Freewheel stop
[Per STT]	STT	Stop according to **[Type of stop]** STT parameter but without an error triggered after stop
[Fallback Speed]	LFF	Change to fallback speed, maintained as long as the detected error persists and the command has not been removed (1)
[Ramp stop]	rMP	Stop on ramp **Factory setting**

[AI4 Th Error Level] tH4F ★

Error detection level for AI4.

This parameter can be accessed if **[AI4 Type]** A14t is not set to:

- **[Voltage]** 10U, or
- **[Current]** 0A, or
- **[PTC Management]** PtC.

Setting ( )	Description
-15.0...200.0°C	Setting range **Factory setting**: 110.0°C

[AI4 Th Warn Level] tH4A ★

Warning level for AI4.

This parameter can be accessed if **[AI4 Type]** A14t is not set to:

- **[Voltage]** 10U, or
- **[Current]** 0A, or
- **[PTC Management]** PtC.

Setting ( )	Description
-15.0...200.0°C	Setting range **Factory setting**: 90.0°C

[AI4 Th Value] tH4V ★

AI4 thermal value.

This parameter can be accessed if **[AI4 Type]** A14t is not set to:

- **[Voltage]** 10U, or
- **[Current]** 0A, or
- **[PTC Management]** PtC.

Setting	Description
-15.0...200.0°C	Setting range **Factory setting**: _

[AI5 Th Monitoring] tH5S ★

Activation of the thermal monitoring on AI5.

This parameter can be accessed if VW3A3203 I/O extension module has been inserted.

Setting	Code / Value	Description
[No]	nO	No **Factory setting**
[YES]	YES	Yes

[AI5 Type] A15t ★

AI5 assignment.

This parameter can be accessed if **[AI5 Th Monitoring]** tH5S is not set to **[No]** nO.

Identical to **[AI4 Type]** A14t *(see page 192)*.

[AI5 Th Error Resp] tHSb ★

Thermal monitoring response to a detected error for AI5.

This parameter can be accessed if **[AI5 Type]** AI5t is not set to

- **[Voltage]** 10U, or
- **[Current]** 0A.

Setting	Code / Value	Description
[Ignore]	nO	Detected error ignored
[Freewheel Stop]	YES	Freewheel stop
[Per STT]	STT	Stop according to **[Type of stop]** STT parameter but without an error triggered after stop
[Fallback Speed]	LFF	Change to fallback speed, maintained as long as the detected error persists and the command has not been removed (1)
[Ramp stop]	rMP	Stop on ramp **Factory setting**

[AI5 Th Error Level] tHSF ★

Error detection level for AI5.

This parameter can be accessed if **[AI5 Type]** AI5t is not set to:

- **[Voltage]** 10U, or
- **[Current]** 0A, or
- **[PTC Management]** PTC.

Setting ( )	Description
-15.0...200.0°C	Setting range **Factory setting**: 110.0°C

[AI5 Th Warn Level] tHSA ★

Warning level for AI5.

This parameter can be accessed if **[AI5 Type]** AI5t is not set to:

- **[Voltage]** 10U, or
- **[Current]** 0A, or
- **[PTC Management]** PTC.

Setting ( )	Description
-15.0...200.0°C	Setting range **Factory setting**: 90.0°C

[AI5 Th Value] tHSV ★

AI5 thermal value.

This parameter can be accessed if **[AI5 Type]** AI5t is not set to:

- **[Voltage]** 10U, or
- **[Current]** 0A, or
- **[PTC Management]** PTC.

Setting	Description
-15.0...200.0°C	Setting range **Factory setting**: _

[Fallback Speed] LFF

Fallback speed.

Setting	Description
0.0...500.0 Hz	Setting range **Factory setting**: 0.0 Hz

[Motor monitoring] MOP - Menu

Access

[Complete settings] ➡ **[Motor parameters]** ➡ **[Motor monitoring]**

About This Menu

The thermal monitoring function helps to prevent the motor from overheating by an estimation of the thermal state of the motor.

[Current Limitation] CLI ★

Internal current limit.

NOTICE
OVERHEATING ● Verify that the motor is properly rated for the maximum current to be applied to the motor. ● Verify that the parameter **[Current Limitation]** CLI is set to a value lower or equal to the value shown in this table. ● Consider the duty cycle of the motor and all factors of your application including derating requirements in determining the current limit. **Failure to follow these instructions can result in equipment damage.**

NOTE: If the setting is less than 0.25. In, the drive may lock in **[OutPhaseLoss Assign]** OPL if this has been enabled. If it is less than the no-load motor current, the motor cannot run.

Setting	Description
0...1.1 In(1)	Setting range **Factory setting**: 1.1 In(1)
(1) Corresponding to the rated drive current indicated in the installation manual and on the drive nameplate.	

[Attenuation Time] SOP ★

Attenuation time.

This parameter can be accessed if **[Motor surge limit.]** SVL is not set to **[No]** NO.

The value of the **[Volt surge limit. opt]** SOP parameter corresponds to the attenuation time of the cable used. It is defined to help to prevent the superimposition of voltage wave reflections resulting from long cable lengths. It limits over-voltages to twice the DC bus rated voltage.

As surge voltage depends on many parameters such as types of cable, different motor powers in parallel, different cable lengths in parallel, and so on, it is recommend the use of an oscilloscope to check the over-voltage values obtained at the motor terminals.

For long cable lengths, an output of the filter or a dV/dt filter must be used.

To retain the overall drive performance, do not increase the SOP value unnecessarily.

NOTE: The factory setting of this parameter is 10 µs for ATV630C22N4 to ATV630C31N4.

Setting	Code / Value	Description
[6 µs]	6	6 µs
[8 µs]	8	8 µs **Factory setting**
[10 µs]	10	10 µs

[Sinus Filter Activation] oFI ★

Sinus filter activation.

This parameter can be accessed if **[Motor Control Type]** Ctt is not set to **[SYN_U VC]** SYnU and **[Rel. Mot.]** SrVC.

NOTICE
RISK OF DAMAGE TO THE SINUS FILTER On systems using a sinus filter, the maximum output frequency **[Max frequency]** tFr must not exceed 100 Hz. **Failure to follow these instructions can result in equipment damage.**

Setting	Code / Value	Description
[No]	nO	No sinus filter **Factory setting**
[Yes]	YES	Use of a sinus filter to limit over-voltages on the motor and reduce the ground detected error leakage current or in case of applications with Step-Up transformer.

[Output Short Circuit Test] Strt

Output short circuit test configuration.

The drive outputs are tested at every power-up irrespective of the configuration of this parameter. If this parameter is set to **[Yes]** YES, the test is also done every time a run command is applied. These tests cause a slight delay (a few ms). In the event of an error, the drive locks.

The *drive output short-circuit (terminals U-V-W): SCF* error can be detected.

The factory setting value is changed to **[Yes]** YES depending on the catalog numbers.

Setting	Code / Value	Description
[No]	nO	Not test at run command **Factory setting**
[Yes]	YES	Output short circuit test at each run command

[Motor Therm Thd] ttd

Motor thermal threshold for **[Motor Thermal Thd]** tSA warning activation.

Setting ❮❯	Description
0...118%	Setting range **Factory setting**: 100%

[Motor control] drC - Menu

Access

[Complete settings] ➡ **[Motor parameters]** ➡ **[Motor control]**

About This Menu

This menu shows the motor control related parameters.

[IR compensation] UFr

This parameter is used to optimize torque at low speed, or to adapt to special cases (for example: for motors connected in parallel, decrease **[IR compensation]** UFr). If there is insufficient torque at low speed, increase **[IR compensation]** UFr. A too high value can avoid the motor to start (locking) or change the current limiting mode.

Setting	Description
0...200%	Setting range **Factory setting**: 100%

[Slip compensation] SLP ★

Slip compensation.

This parameter can be accessed if **[Motor Control Type]** CtT is not set to **[SYN_U VC]** SYnU and **[Rel. Mot.]** SrVC.

This parameter is set to 0% when **[Motor Control Type]** CtT is set to **[U/F VC Quad.]** UF9.

The speeds given on motor nameplates are not necessarily exact.

If the slip setting is lower than the actual slip, the motor is not rotating at the correct speed in steady state, but at a lower speed than the reference.

If the slip setting is higher than the actual slip, the motor is overcompensated and the speed is unstable.

Setting	Description
0...300%	Setting range **Factory setting**: 100%

[U/F Profile] PFL ★

U/F profile.

This parameter can be accessed if **[Motor Control Type]** CtT is set to **[U/F VC Quad.]** UF9.

This parameter is used to adjust the fluxing current level at zero speed, in % of nominal motor current at nominal speed.

Setting	Description
0...100%	Setting range **Factory setting**: 30%

[U1] U 1 ★

Voltage point 1 on 5 points V/F.

This parameter can be accessed if **[Motor Control Type]** CtT is set to **[V/F 5pts]** UF5.

Setting	Description
0...800 Vac	Setting range according to rating **Factory setting**: 0 Vac

[U2] u 2 ★

Voltage point 2 on 5 points V/F.

V/F profile setting.

This parameter can be accessed if **[Motor Control Type]** C t t is set to **[V/F 5pts]** u F 5.

Setting	Description
0...800 Vac	Setting range according to rating **Factory setting**: 0 Vac

[U3] u 3 ★

Voltage point 3 on 5 points V/F.

V/F profile setting.

This parameter can be accessed if **[Motor Control Type]** C t t is set to **[V/F 5pts]** u F 5.

Setting	Description
0...800 Vac	Setting range according to rating **Factory setting**: 0 Vac

[U4] u 4 ★

Voltage point on 4 points V/F.

V/F profile setting.

This parameter can be accessed if **[Motor Control Type]** C t t is set to **[V/F 5pts]** u F 5.

Setting	Description
0...800 Vac	Setting range according to rating **Factory setting**: 0 Vac

[U5] u 5 ★

Voltage point 5 on 5 points V/F.

V/F profile setting.

This parameter can be accessed if **[Motor Control Type]** C t t is set to **[V/F 5pts]** u F 5.

Setting	Description
0...800 Vac	Setting range according to rating **Factory setting**: 0 Vac

[F1] F 1 ★

Frequency point 1 on 5 points V/F.

V/F profile setting.

This parameter can be accessed if **[Motor Control Type]** C t t is set to **[V/F 5pts]** u F 5.

Setting	Description
0.0...500.0 Hz	Setting range **Factory setting**: 0.0 Hz

[F2] F 2 ★

Frequency point 2 on 5 points V/F.

V/F profile setting.

This parameter can be accessed if **[Motor Control Type]** C t t is set to **[V/F 5pts]** u F 5.

Setting ( )	Description
0.0...500.0 Hz	Setting range **Factory setting**: 0.0 Hz

[F3] F 3 ★

Frequency point 3 on 5 points V/F.

V/F profile setting.

This parameter can be accessed if **[Motor Control Type]** C t t is set to **[V/F 5pts]** u F 5.

Setting ( )	Description
0.0...500.0 Hz	Setting range **Factory setting**: 0.0 Hz

[F4] F 4 ★

Frequency point 4 on 5 points V/F.

V/F profile setting.

This parameter can be accessed if **[Motor Control Type]** C t t is set to **[V/F 5pts]** u F 5.

Setting ( )	Description
0.0...500.0 Hz	Setting range **Factory setting**: 0.0 Hz

[F5] F 5 ★

Frequency point 5 on 5 points V/F.

V/F profile setting.

This parameter can be accessed if **[Motor Control Type]** C t t is set to **[V/F 5pts]** u F 5.

Setting ( )	Description
0.0...500.0 Hz	Setting range **Factory setting**: 0.0 Hz

[Output Ph Rotation] P H r

Output phase rotation.

Modifying this parameter operates as an inversion of 2 of the three motor phases. This results in changing the direction of rotation of the motor.

Setting	Code / Value	Description
[ABC]	A b C	Standard rotation **Factory setting**
[ACB]	A C b	Opposite rotation

[Inertia Factor] SPGU ★

Inertia factor

This parameter can be accessed if:
- **[Access Level]** LAC is set to **[Expert]** EPr, and
- **[Motor Control Type]** CTT is set to:
  - **[U/F VC 5pts]** UF5, or
  - **[U/F VC Quad.]** UF9, or
  - **[SYN_U VC]** SYnU.

Setting	Description
0...1,000%	Setting range **Factory setting**: 40%

[Boost Activation] boA ★

Boost activation.

This parameter can be accessed if **[Access Level]** LAC is set to **[Expert]** EPr.

Setting	Code / Value	Description
[Inactive]	no	No boost
[Dynamic]	dynA	Dynamic boost, the magnetizing current value is modified according to the motor load. **Factory setting** **NOTE:** Drive manages itself the value **[Magnetizing Current]** idA to optimize the performances. **NOTE:** This selection can't be accessed if **[Motor Control Type]** CTT is set to **[Rel. Mot.]** SrVC or **[SYN_U VC]** SYnU.
[Static]	StAt	Static boost, the magnetizing current value follows the profile whatever the motor load **NOTE:** With this selection the **[Boost]** boo and **[Freq Boost]** FAb are taken into account. **NOTE:** This selection can be used for conical motor with **[Boost]** boo sets to a negative value.
[Constant]	CSTE	Constant boost, the magnetizing current is maintained in case of change of direction of the motor. An additional parameter is available to handle the deceleration and stop phase. CSTE can be accessed if **[Motor Control Type]** CTT is set to **[Rel. Mot.]** SrVC or **[SYN_U VC]** SYnU. **NOTE:** With this selection only **[Boost]** boo is taken into account.

[Boost] boo ★

Value at 0 Hz: % of nominal magnetizing current (taken into account if different from 0).

A too high value of **[Boost]** boo can result in a magnetic saturation of the motor, which leads to a torque reduction.

This parameter can be accessed if:
- **[Access Level]** LAC is set to **[Expert]** EPr, and
- **[Boost Activation]** boA is not set to **[Inactive]** no.

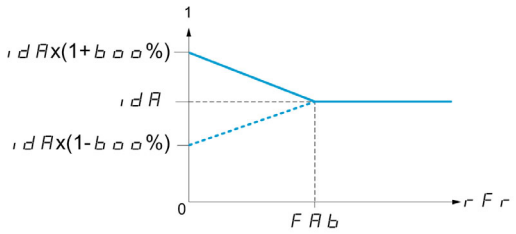

NOTE: For synchronous motors, it is recommended to set this value to optimize control at low speed.

Setting	Description
-100...100%	Setting range If **[Boost Activation]** b o A is set to **[Dynamic]** d Y n A, **[Boost]** b o o is set to 25%. **Factory setting**: 0%

[Freq Boost] F A b ★

Value at 0 Hz: speed threshold to reach nominal magnetizing current.

This parameter can be accessed if:
- **[Access Level]** L A C is set to **[Expert]** E P r , and
- **[Boost Activation]** b o A is not set to **[NO]** n o , and
- **[Boost Activation]** b o A is not set to **[Constant]** C S t E .

Setting	Description
0.0...500.0 Hz	Setting range If **[Boost Activation]** b o A is set to **[Dynamic]** d Y n A, **[Freq Boost]** F A b is set to 30.0 Hz. **Factory setting**: 0.0 Hz

NOTE: For synchronous motors, it is recommended to set this value to optimize control at low speed.

About Output Voltage Management and Overmodulation

[Overmodul. Activation] o V M A

Overmodulation activation.

This parameter can be accessed if **[Access Level]** L A C is set to **[Expert]** E P r .

The purpose of the overmodulation is to:
- compensate the voltage loss in DC bus when the drive is loaded.
- increase the maximum possible voltage to reduce current consumption at high motor voltage and limit thermal effect on the motor.

In factory settings, the motor supplied by the intermediate of the drive has:
- a common output voltage mode not null depending on the DC bus supply.
- No overmodulation (**[Overmodul. Activation]** o V M A is set to **[No]** n o): sinusoidal phase to phase voltage.
- output voltage limited to the maximum possible value depending on DC bus supply which depends on the main power supply.

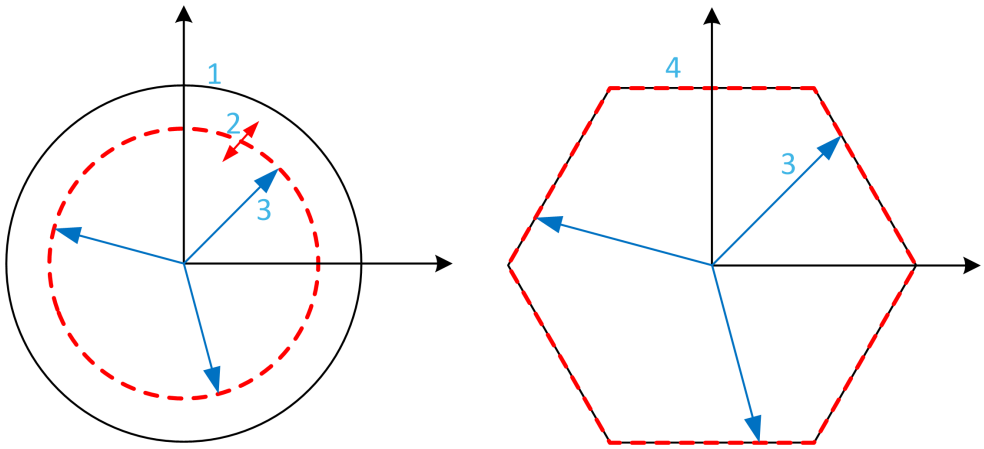

1 Maximum possible value of Output voltage limitation (default value)
2 VLim with numeric value under the maximum limitation
3 Output voltage
4 Output voltage limitation with full overmodulation (hexagon form)

Setting	Code / Value	Description
[Default]	dEFAuLt	Overmodulation is not configured By default, the Output voltage limitation describes a circle with at maximum radius depending of DC bus voltage. The radius can be reduced to a lower value by setting a numerical value to **[Output voltage limitation]** VLIn. **Factory setting**
[Full]	FuLL	Overmodulation is active and full. The output voltage limitation describes a regular hexagon depending of DC bus voltage. The phase to phase voltages are not sinusoidal.

[Output voltage limitation] VLIn

Output voltage limitation.

This parameter can be accessed if **[Access Level]** LAC is set to **[Expert]** EPr.

The purpose of this parameter is to modify the output voltage limitation to a lower value than the maximum default value.

The unit of the numerical value of this parameter is in phase to phase rms voltage.

This parameter cannot be set to a numerical value if **[Overmodul. Activation]** oVMA is set to **[FULL]** FuLL.

Setting	Code / Value	Description
[Default]	dEFAuLt	Default value of Output Voltage limitation. The Output Voltage limitation is at the maximum capability of the DC bus voltage depending on **[Overmodul. Activation]** oVMA setting. **Factory setting**
0...9999 V		Setting range of the output limitation voltage. Set a value lower than the corresponding **[Default]** dEFAuLt value to reduce the maximum output voltage limitation. If the numerical value is higher than the corresponding **[Default]** dEFAuLt value, this corresponding value is considered.

[Spd Loop Optimization] nCL - Menu

Access

[Complete settings] → **[Motor parameters]** → **[Motor control]** → **[Spd Loop Optimization]**

About This Menu

This procedure can be done if **[Motor control type]** Ctt is not set to **[U/F VC Standard]** Std, **[U/F VC Quad.]** uF9, **[U/F VC 5pts]** uF5 or **[SYN_U VC]** SYnu.

Recommended Procedure for Setting the High-Performance Speed Loop

Step	Action
1	Enter the motor parameters. If you subsequently modify one of these, you have to perform this whole procedure again.
2	The value of the inertia being driven must be entered in the **[Application Inertia]** JAPL parameter. *(see page 208)* **NOTE:** If a motor parameter is modified, the estimated inertia is recalculated and updated (parameters **[Estim. app. inertia]** JES t and **[Inertia Mult. Coef.]** JMuL. **[Application Inertia]** JAPL returns to its default value according to the new value of **[Estim. app. inertia]** JES t.
3	Check the speed loop response time by first setting **[Feed forward]** FFP to 0 (see graphs on next page).
4	If necessary, adjust the bandwidth and stability using parameters **[FreqLoop Stab]** StA and **[FreqLoopGain]** FLG *(see page 206)*.
5	To optimize ramp following, increase the feedforward parameter [**[Feed forward]** FFP as indicated on the next page until the best result is obtained.
6	The feedforward term bandwidth can be adjusted if necessary (as shown on the next page) to further improve the ramp following or to filter the noise on the speed reference.

High-Performance speed Loop - Setting the [Feed forward] *F F P* Parameter

This is used to adjust the level of dynamic torque feedforward required for accelerating and decelerating the inertia. The effect of this parameter on ramp following is illustrated below. Increasing the value of *F F P* allows the ramp to be followed more closely. However, if the value is too high, overspeed occurs. The optimum setting is obtained when the speed follows the ramp precisely; this depends on the accuracy of the **[Application Inertia]** *J A P L* parameter, *(see page 208)* and the **[Encoder filter value]** *F F r* parameter setting

F F P settings

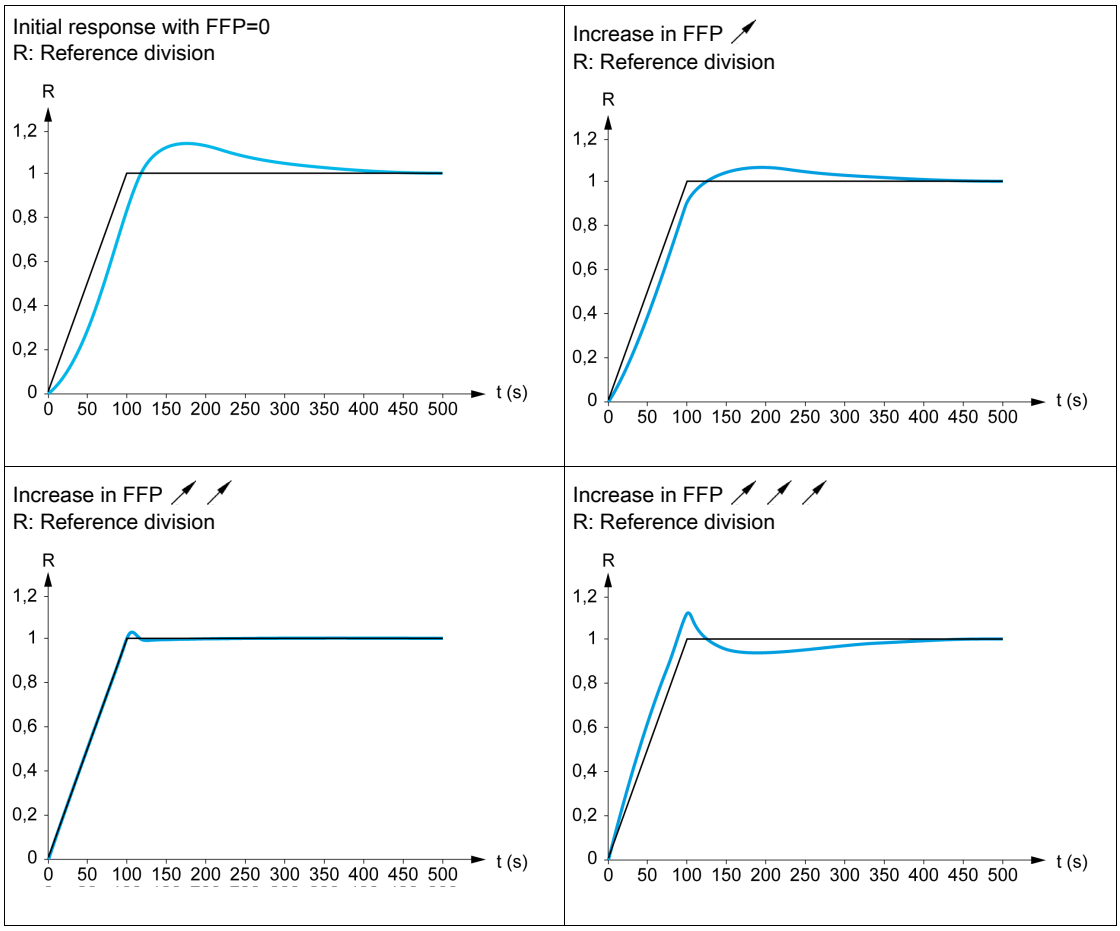

High-Performance Speed Loop - Setting the [FeedFwd Bandwidth] FFV Parameter

This is used to adjust the bandwidth of the dynamic torque feedforward term. The effect of this parameter on ramp following is illustrated below. Decreasing the value of FFV reduces the effect of noise on the speed reference (torque ripple). However, too great a decrease in relation to the ramp settings (on short ramps) causes a delay, and ramp following is adversely affected. Increasing the value of FFV allows the ramp to be followed more closely, but also heightens noise sensitivity. The optimum setting is obtained by reaching the best compromise between ramp following and the existing noise sensitivity.

FFV settings

Initial response with FFV=100%
R: Reference division

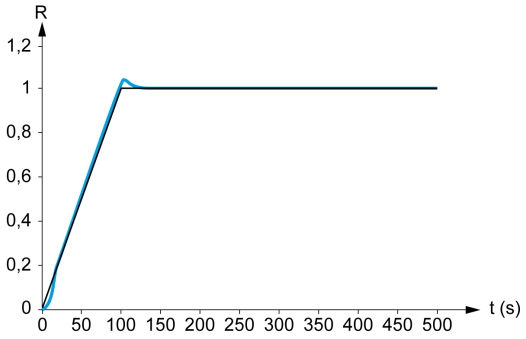

Reduction in FFV
R: Reference division

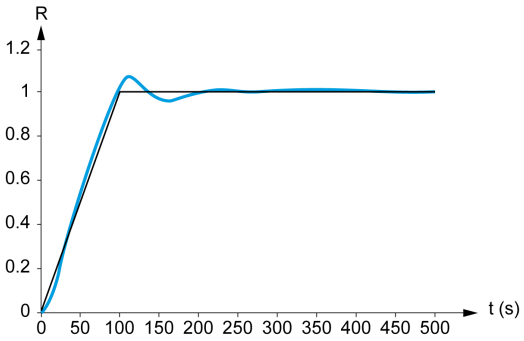

Increase in FFV
R: Reference division

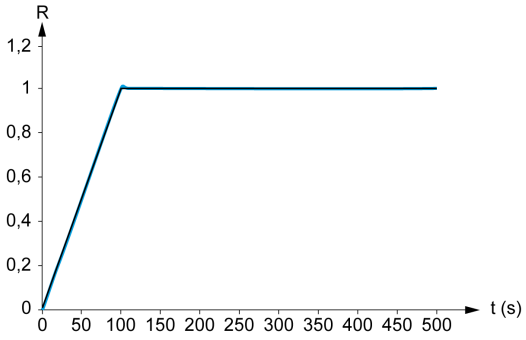

[Speed loop type] SSL ★

Speed loop type.

This parameter can be accessed if **[Motor control type]** CTT is not set to:

- **[U/F VC Standard]** STD, and
- **[U/F VC Quad.]** UF9, and
- **[U/F VC 5pts]** UF5, and
- **[SYN_U VC]** SYNU

Setting	Code / Value	Description
[Standard]	STD	Standard speed loop **Factory setting**
[High Perf]	HPF	High-performance speed loop. It is advised to deactivate **[Dec.Ramp Adapt]** brA = **[No]** no

[Speed prop. gain] SPG ★

Speed loop proportional gain.

This parameter can be accessed if:

- **[Speed loop type]** SSL is set to **[Standard]** Std, and
- **[Motor control type]** Ctt is not set to:
  - **[U/F VC Standard]** Std, and
  - **[U/F VC Quad.]** UF9, and
  - **[U/F VC 5pts]** UF5, and
  - **[SYN_U VC]** SYnU

Setting ( )	Description
0...1,000%	Setting range **Factory setting**: 40%

[Speed time integral] S itE ★

Speed loop integral time constant.

This parameter can be accessed if:

- **[Speed loop type]** SSL is set to **[Standard]** Std, and
- **[Motor control type]** Ctt is not set to:
  - **[U/F VC Standard]** Std, and
  - **[U/F VC Quad.]** UF9, and
  - **[U/F VC 5pts]** UF5, and
  - **[SYN_U VC]** SYnU

Setting ( )	Description
1...65,535 ms	Setting range **Factory setting**: According to the drive rating.

[K speed loop filter] SFC

Speed filter coefficient (0(IP) to 1(PI)).

Setting ( )	Description
0...100	Setting range **Factory setting**: 65

[Spd est. filter time] FFH ★

Filter time of the estimated speed.

This parameter can be accessed if **[Access Level]** LAC is set to **[Expert]** EPr.

Setting ( )	Description
0.0...100.0 ms	Setting range **Factory setting**: According to the drive rating

[FreqLoop Stab] SLA ★

Frequency loop stability (Speed loop damping factor).

This parameter can be accessed if:
- **[Speed loop type]** SSL is set to **[Standard]** SLd, and
- **[Motor control type]** CLL is not set to:
  - **[U/F VC Standard]** SLd, and
  - **[U/F VC Quad.]** UF9, and
  - **[U/F VC 5pts]** UF5, and
  - **[SYN_U VC]** SYnU

Stability: Used to adapt the return to steady state after a speed transient, according to the dynamics of the machine. Gradually increase the stability to increase control loop attenuation and thus reduce any overspeed.

Setting ❮❯	Description
0...100%	Setting range **Factory setting**: 20%

[FreqLoopGain] FLG ★

Frequency loop gain (Speed loop bandwidth).

This parameter can be accessed if:
- **[Speed loop type]** SSL is set to **[Standard]** SLd, and
- **[Motor control type]** CLL is not set to:
  - **[U/F VC Standard]** SLd, and
  - **[U/F VC Quad.]** UF9, and
  - **[U/F VC 5pts]** UF5, and
  - **[SYN_U VC]** SYnU

Used to adapt the response of the machine speed transients according to the dynamics. For machines with high resistive torque, high inertia of fast cycles, increase the gain gradually.

Setting ❮❯	Description
0...100%	Setting range **Factory setting**: 20%

[Feed forward] FFP ★

Feed-Forward term activation and setting.

This parameter can be accessed if:
- **[Speed loop type]** SSL is set to **[Standard]** SLd, and
- **[Motor control type]** CLL is not set to:
  - **[U/F VC Standard]** SLd, and
  - **[U/F VC Quad.]** UF9, and
  - **[U/F VC 5pts]** UF5, and
  - **[SYN_U VC]** SYnU

Percentages of the high-performance regulator feedforward term. 100% corresponds to the term calculated using the value of **[Application Inertia]** JAPL .

Setting ❮❯	Description
0...200%	Setting range **Factory setting**: 0%

[FeedFwd Bandwidth] FFW ★

Bandwidth of the filter of feed-forward term.

This parameter can be accessed if:
- **[Speed loop type]** SSL is set to **[Standard]** Std, and
- **[Motor control type]** Ctt is not set to:
  - **[U/F VC Standard]** Std, and
  - **[U/F VC Quad.]** UF9, and
  - **[U/F VC 5pts]** UF5, and
  - **[SYN_U VC]** SYnU

Bandwidths of the high-performance speed loop feedforward term, as a percentage of the predefined value.

Setting	Description
20...500%	Setting range **Factory setting**: 100%

[External FeedFwd Assign] tEFF ★

External feed-forward mode

Setting	Code / Value	Description
[No]	nO	Analog input is not assigned **Factory setting**
[AI1]...**[AI3]**	AI1...AI3	Analog input AI1...AI3
[AI4]...**[AI5]**	AI4...AI5	Analog input AI4...AI5 if VW3A3203 I/O extension module has been inserted
[Ref.Freq-Rmt.Term]	LCC	Reference Frequency via remote terminal
[Ref. Freq-Modbus]	Mdb	Reference frequency via Modbus
[Ref. Freq-CANopen]	CAn	Reference frequency via CANopen if a CANopen module has been inserted
[Ref. Freq-Com. Module]	nEt	Reference frequency via fieldbus module if a fieldbus module has been inserted
[Embedded Ethernet]	EtH	Embedded Ethernet
[DI5 PulseInput Assignment]...**[DI6 PulseInput Assignment]**	PI5...PI6	Digital input DI5...DI6 used as pulse input

[Inertia Mult. Coef.] JMUL ★

Scaling factor for inertia displays.

This parameter can be accessed if:
- **[Speed loop type]** SSL is set to **[Standard]** Std, and
- **[Motor control type]** Ctt is not set to:
  - **[U/F VC Standard]** Std, and
  - **[U/F VC Quad.]** UF9, and
  - **[U/F VC 5pts]** UF5, and
  - **[SYN_U VC]** SYnU

Increment for **[Application Inertia]** JAPL and **[Estim. app. inertia]** JES t parameters, calculated by the drive, in read-only mode: 0.1 gm², 1 gm², 10 gm², 100 gm², 1000 gm².

Setting	Description
0.0...6553.5 gm²	Setting range **Factory setting**: 0.0 gm²

[Estim. app. inertia] JESt ★

Estimated application inertia.

This parameter can be accessed if:
- **[Speed loop type]** SSL is set to **[Standard]** Std, and
- **[Motor control type]** Ctt is not set to:
  - **[U/F VC Standard]** Std, and
  - **[U/F VC Quad.]** UF9, and
  - **[U/F VC 5pts]** UF5, and
  - **[SYN_U VC]** SYnU

The inertia being driven is estimated by the drive according to the motor parameters, in read-only mode. Speed loop default settings are determined by the drive from this inertia.

Increment given by **[Inertia Mult. Coef.]** JMUL : - 0.1 gm², 1 gm², 10 gm², 100 gm² or 1000 gm².

Setting	Description
1...9,999 kg.m²	Setting range **Factory setting**: –

[App. Inertia Coef.] JACo ★

Adjustable application inertia ratio.

This parameter can be accessed if:
- **[Speed loop type]** SSL is set to **[Standard]** Std, and
- **[Motor control type]** Ctt is not set to:
  - **[U/F VC Standard]** Std, and
  - **[U/F VC Quad.]** UF9, and
  - **[U/F VC 5pts]** UF5, and
  - **[SYN_U VC]** SYnU

Coefficient which fixes the ratio between **[Estim. app. inertia]** JESt and **[Application Inertia]** JAPL parameters.

[Application Inertia] JAPL = **[Estim. app. inertia]** JESt x **[App. Inertia Coef.]** JACo.

Setting	Description
0.10...100.00	Setting range **Factory setting**: 1

[Application Inertia] JAPL ★

Adjustable application inertia.

This parameter can be accessed if:
- **[Speed loop type]** SSL is set to **[Standard]** Std, and
- **[Motor control type]** Ctt is not set to:
  - **[U/F VC Standard]** Std, and
  - **[U/F VC Quad.]** UF9, and
  - **[U/F VC 5pts]** UF5, and
  - **[SYN_U VC]** SYnU

Adjustable application inertia used by the drive to optimize speed loop settings).

Increment given by **[Inertia Mult. Coef.]** JMUL : 0.1 gm², 1 gm², 10 gm², 100 gm² or 1000 gm².

NOTE: If a motor parameter is modified, the estimated inertia is recalculated and updated (parameters **[Estim. app. inertia]** JESt and **[Inertia Mult. Coef.]** JMUL). **[Application Inertia]** JAPL is also returned to its default value according to the new value of **[Estim. app. inertia]** JESt.

Setting	Description
0.00...655.35 kgm²	Setting range **Factory setting**: -

[Switching frequency] SWF - Menu

Access

[Complete settings] ➡ **[Motor parameters]** ➡ **[Switching frequency]**

[Switching frequency] SFr

Drive switching frequency.

Adjustment range: The maximum value is limited to 4 kHz if **[Motor surge limit.]** SVL parameter is configured.

If **[Sinus Filter Activation]** oFI is set to **[Yes]** YES, the minimum value is 2 kHz and the maximum value is limited to 6 kHz or 8 kHz according to drive rating.

NOTE: In the event of excessive temperature rise, the drive automatically reduces the switching frequency and reset it once the temperature returns to normal.

In case of high-speed motor, it is advised to increase the PWM frequency **[Switching frequency]** SFr at 8, 12 kHz or 16 kHz

Setting	Description
2...8 or 16 kHz according to drive rating	Setting range **Factory setting**: 4.0 kHz or 2.5 kHz according to the drive rating

[Noise Reduction] nrd

Motor noise reduction.

Random frequency modulation helps to prevent any resonance, which may occur at a fixed frequency.

Setting	Code / Value	Description
[No]	no	Fixed frequency **Factory setting**
[Yes]	YES	Frequency with random modulation

[Switch Freq Type] SFt ★

Switching frequency type.

This parameter can be accessed if **[Access Level]** LAC is set to **[Expert]** EPr.

The motor switching frequency is modified (reduced) when the internal temperature of the drive is too high.

Setting	Code / Value	Description
[SFR type 1]	HF1	Heating loss optimization Allows the system to adapt the switching frequency according to the motor frequency. This setting optimizes the heating loss of the drive in order to improve the drive efficiency. **Factory setting**
[SFR type 2]	HF2	Allows the system to keep a constant chosen switching frequency **[Switching frequency]** SFr whatever the motor frequency **[Output frequency]** rFr. With this setting, the motor noise is kept as low as possible by a high switching frequency. In the event of overheating, the drive automatically decreases the switching frequency. It is restored to its original value when the temperature returns to normal.

[Motor Surge Limit.] SVL

Surge voltage limitation.

This function limits motor over-voltages and is useful in the following applications:
- NEMA motors
- Old or poor quality motors
- Spindle motors
- Rewound motors

This parameter can remain set to **[No]** nO for 230/400 Vac motors used at 230 Vac, or if the length of cable between the drive and the motor does not exceed:
- 4 m with unshielded cables
- 10 m with shielded cables

NOTE: When **[Motor Surge Limit.]** SVL is set to **[Yes]** YES, the maximum switching frequency **[Switching freq.]** SFr is modified.

Setting	Code / Value	Description
[No]	nO	Function inactive **Factory setting**
[Yes]	YES	Function active

[Attenuation Time] SoP ★

Attenuation time.

This parameter can be accessed if **[Motor surge limit.]** SVL is not set to **[No]** nO. The value of the **[Attenuation Time]** SoP parameter corresponds to the attenuation time of the cable used. It is defined to help to prevent the superimposition of voltage wave reflections resulting from long cable lengths. It limits over-voltages to twice the DC bus rated voltage. As surge voltage depends on many parameters such as types of cable, different motor powers in parallel, different cable lengths in parallel, and so on, It is recommended to use an oscilloscope to check the over-voltage values obtained at the motor terminals. If the higher value of **[Attenuation Time]** SoP is not enough according to the cable lengths, an output filter or a dV/dt filter must be used.

To retain the overall drive performance, do not increase the SoP value unnecessarily.

Setting	Code / Value	Description
[6 µs]	6	6 µs
[8 µs]	8	8 µs **Factory setting**
[10 µs]	10	10 µs

Section 8.4
[Define system units]

[Define system units] SUC - Menu

Access

[Complete settings] ➞ [Define system units]

About This Menu

In order to be easy to configure, commission, operate, and maintain, the drive uses the application units.

The physicals that are concerned by application units are:
- Pressure values
- Flow rate values
- Temperature values
- Currency values

NOTE: Some other default system units are automatically deduced from configurable system units or from other parameters.

System unit applies by default to all communication parameters and HMI (Graphic Display Terminal, Web server, DTM-based software).

When a system unit is changed, there is no rescaling of values. Numerical values are kept, but the meaning of these values is not the same:
- After a change, the behavior of the product will not change (the system stays numerically the same).
- If new values are written through communication or through HMI in new unit, then the behavior is impacted. In that case, all parameters should be reconfigured according to the new selected unit.
- In order to avoid issues due to a modification of system unit parameters, system units should be modified only during the installation of the product and before the commissioning of the functions.

The precision of the physical values is selected at the same time as the unit.

By default, values are signed.

Default range of values are:

16 bits values	32 bits values
-32,768...32,767	-2,147,483,648...2,147,483,648

[P sensor unit] SUPR

Default system application unit used for pressure.

Available pressure units:

Unit	Symbol	Conversion
Kilo Pascal	kPa	100 kPa = 1 bar
Millibar	mbar	
Bar	bar	
Pound / square inch (lb/in²)	psi psig	14.5 psi = 1 bar
Inch H2O Inch water gauge Inch water column	inH2O inWG inWC	1 inH2O 4°C = 0.0024908891 bar (0.036127292 psi)
Feet water gauge Feet water column Feet	ftWG ftWC ft	1 inH2O 4°C = 0.0298906692 bar (0.433527504 psi)
Meter water gauge Meter water column Meter	mWG mWC (mCE) m	1 mH2O(4°C) = 0.0980665 bar (1.42233433 psi)
Inch of mercury	inHg	1 inHg = 0.0338638864 bar (0.491154147 psi)
Percentage	%	–
w/o unit	–	–

Setting	Code / Value	Description
[1Kpa]	PA	1 kpa
[1mbar]	1mbAr	1 mbar
[1Bar]	bAr	1 bar
[0.1Bar]	0.1bAr	0.1 bar **Factory setting**
[0.01Bar]	0.01bAr	0.01 bar
[1 PSI]	PSI	1 Psi
[0.1 PSI]	0.1PSI	0.1 psi
[1 PSIG]	PSIG	1 Psig
[0.1 PSIG]	0.1PSIG	0.1 Psig
[1inH20]	1inH20	1 inH20
[1inWg]	1inWG	1 inWg
[1inWC]	1inWC	1 inWc
[1 FtWg]	1FtWG	1 FtWg
[1 FtWC]	1FtWC	1 FtWC
[1 Ft]	1Ft	1 Ft
[1 MWG]	1MWG	1 mWg
[0.1 MWG]	0.1MWG	0.1 mWg
[1 MWC]	1MWC	1 mWC
[0.1 MWC]	0.1MWC	0.1 mWC
[1m]	1M	1 m
[0.1 m]	0.1M	0.1 m
[1 inHG]	1inHG	1 inHg
[0.1%]	0.1?	0.1%
[0.1]	0.1 W?o	0.1 w/o

[Flow rate unit] SuFr

Default system application unit used for flow rate.

Available flow units:

Unit	Symbol	Conversion
Liter / second	l/s	–
Liter / minute	l/min	–
Liter / hour	l/h	–
Cubic decimeter / minute	dm3/min	–
Cubic meter / second	m3/s	–
Cubic meter / minute	m3/min	–
Cubic meter / hour	m3/h	–
Gallon per second	gal/s	1 usgal = 3,785411784 l
Gallon per minute	gal/min; GPM	–
Gallon per hour	gal/h	–
Cubic feet / second	ft3/s	1 ft3 = 28.317 l
Cubic feet / minute	ft3/min; CFM, SCFM	–
Cubic feet / hour	ft3/h	–
Percentage	%	–
w/o unit	–	–

Setting	Code / Value	Description
[1 L/s]	1LS	L/s

Setting	Code / Value	Description
[l/s]	0 1L S	0.1 L/s
[1 L/m]	1L n	L/m
[1 L/h]	1L h	L/h
[1 dm3/mn]	1dn3n	d3/m
[1 m3/s]	1n3S	M3/s
[0.1 m3/s]	0 1n3S	0.1 M3/s
[1m3/m]	1n3nn	M3/min
[0.1 m3/m]	0 1n3nn	0.1 M3/min
[1 m3/h]	1n3h	1 M3/h
[0.1m3/h]	0 1n3h	0.1 M3/h **Factory setting**
[1 gal/s]	1GPS	1 Gal/s
[1 GPM]	1GPn	1 GPM
[1 gal/h]	1GPH	1 Gal/h
[1 ft3/s]	1CFS	1 ft3/s
[1CFM]	1CFn	1 CFM
[1SCFM]	1SCFn	1 SCFM
[1 Ft3/h]	1CFH	1 ft3/h
[1 Kg/s]	1GS	1 kg/s
[1 Kg/m]	1Gn	1 kg/m
[1 Kg/h]	1GH	1 kg/h
[1 Lb/s]	1Lbs	1 lb/s
[1 Lb/m]	1Lbn	1 lb/m
[1 Lb/h]	1LbH	1 lb/h
[0.1%]	0 1PC	0.1%
[0.1]	0 1Wo	0.1 w/o

[Temperature unit] SUEP

Default system application unit used for temperature.

Available temperature units:

Unit	Symbol	Conversion
Celsius Degree	°C	–
Fahrenheit Degree	°F	TF = 9/5*Tc+32
Percentage	%	–
w/o unit	–	–

Setting	Code / Value	Description
[0.1°C]	0 1C	0.1 °C **Factory setting**
[0.1°F]	0 1F	0.1 °F
[0.1%]	0 1PC	0.1%
[0.1]	0 1Wo	0.1 w/o

[Currency unit list] SUCU

Default system application unit used for currency.

Setting	Code / Value	Description
[EURO]	Euro	Euro **Factory setting**
[$]	dollAr	Dollar
[£]	Pound	Pound
[Krone]	Kr	Krone
[Renminbi]	rMb	Renminbi
[Other]	otHEr	Other

[Liquid Density] rHo

Density of the fluid to be pumped.

This parameter can be accessed if **[Access Level]** LAC is not set to **[Expert]** EPr.

Setting	Description
100...10,000 kg/m3	Setting range **Factory setting**: 1000 kg/m3

Section 8.5
[Sensors assignment]

What Is in This Section?

This section contains the following topics:

Topic	Page
[Sensors assignment] S S C - Menu	216
[AI1 sensor config.] Menu	218
[AI2 sensor config.] Menu	221
[AI3 sensor config.] Menu	223
[AI4 sensor config.] Menu	225
[AI5 sensor config.] Menu	227
[PI5 Sensor Config] Menu	229
[PI6 Sensor Config] Menu	230
[AIV1 configuration] Menu	232
[AIV2 configuration] Menu	234
[AIV3 configuration] Menu	236

[Sensors assignment] SSC - Menu

Access

[Complete settings] ➡ [Sensors assignment]

About This Menu

This menu is used to set the sensors.

In case of mixing absolute and relative sensors, verify the consistency between all sensor data and adjust if necessary by using the process value scaling and the analog inputs operation functions.

[InletPres Assign] PSIA

Inlet pressure sensor assignment.

Setting	Code / Value	Description
[Not Configured]	nO	Not assigned **Factory setting**
[AI1]...**[AI3]**	AI1...AI3	Analog input AI1...AI3
[AI4]...**[AI5]**	AI4...AI5	Analog input AI4...AI5 if VW3A3203 I/O extension module has been inserted
[AI Virtual 1]...**[AI Virtual 3]**	AIV1...AIV3	Virtual analogic input 1...3
NOTE: For sensor configuration, refer to section **[Sensors assignment]** *(see page 216)*.		

[OutletPres Assign] PS2A

Outlet pressure sensor assignment.

Setting	Code / Value	Description
[Not Configured]	nO	Not assigned **Factory setting**
[AI1]...**[AI3]**	AI1...AI3	Analog input AI1...AI3
[AI4]...**[AI5]**	AI4...AI5	Analog input AI4...AI5 if VW3A3203 I/O extension module has been inserted
[AI Virtual 1]...**[AI Virtual 3]**	AIV1...AIV3	Virtual analogic input 1...3
NOTE: For sensor configuration, refer to section **[Sensors assignment]** *(see page 216)*.		

[Inst. Flow Assign.] FSIA

Installation flow sensor assignment.

Setting	Code / Value	Description
[Not Configured]	nO	Not assigned **Factory setting**
[AI1]...**[AI3]**	AI1...AI3	Analog input AI1...AI3
[AI4]...**[AI5]**	AI4...AI5	Analog input AI4...AI5 if VW3A3203 I/O extension module has been inserted
[AI Virtual 1]...**[AI Virtual 3]**	AIV1...AIV3	Virtual analogic input 1...3
[Di5 PulseInput Assignment]...**[Di6 PulseInput Assignment]**	P15...P16	Digital input DI5...DI6 used as pulse input
[Est. Pump Flow]	SLPF	Sensor less estimated flow
NOTE: For sensor configuration, refer to section **[Sensors assignment]** *(see page 216)*.		

Setting	Code / Value	Description
[Est. System Flow]	SLSF	Estimated system flow This selection is only possible if **[Pump System Archit]** nPSA is set to **[Multi Drives]** nVSd or **[Multi Masters]** nVSdr **NOTE:** To use this selection, all the pump characteristics of the system must be configured.
NOTE: For sensor configuration, refer to section **[Sensors assignment]** *(see page 216)*.		

[Pump Flow Assign.] F52A

Pump flow sensor assignment.

Setting	Code / Value	Description
[Not Configured]	no	Not assigned **Factory setting**
[AI1]...**[AI3]**	AI1...AI3	Analog input AI1...AI3
[AI4]...**[AI5]**	AI4...AI5	Analog input AI4...AI5 if VW3A3203 I/O extension module has been inserted
[AI Virtual 1]...**[AI Virtual 3]**	AIV1...AIV3	Virtual analogic input 1...3
[Di5 PulseInput Assignment]...**[Di6 PulseInput Assignment]**	P15...P16	Digital input DI5...DI6 used as pulse input
[Est. Pump Flow]	SLPF	Sensor less estimated flow
NOTE: For sensor configuration, refer to section **[Sensors assignment]** *(see page 216)*.		

[Level Sensor Assign] LCSA ★

Level sensor assignment.

This parameter can be accessed if **[Application Selection]** APPL is set to **[Level]** LEVEL.

Setting	Code / Value	Description
[Not Configured]	no	Not assigned **Factory setting**
[AI1]...**[AI3]**	AI1...AI3	Analog input AI1...AI3
[AI4]...**[AI5]**	AI4...AI5	Analog input AI4...AI5 if VW3A3203 I/O extension module has been inserted
[AI Virtual 1]...**[AI Virtual 3]**	AIV1...AIV3	Virtual analogic input 1...3
NOTE: For sensor configuration, refer to section **[Sensors assignment]** *(see page 216)*.		

[AI1 sensor config.] Menu

About This Menu

Access of **[AI1 Sensor Config.]** menu depends of the sensor assigned to this input.

The following table shows the **[AI1 Sensor Config.]** menus displayed in relation with the sensor and the applicative function used.

If...	And...	Then following menu will be displayed:
[InletPres Assign] PS1A is set to **[AI1]** Ai1	-	**[AI1 Sensor Config.]** iCA1-
	[Priming Pump Assign] PPoA is not set to **[No]** no *(see page 366)*	**[AI1 Sensor Config.]** PPA1-
	[InletPres Monitoring] iPPM is not set to **[No]** no *(see page 391)*	**[AI1 Sensor Config.]** iPA1-
[OutletPres Assign] PS2A is set to **[AI1]** Ai1	-	**[AI1 Sensor Config.]** oCA1-
	[Sleep Detect Mode] SLPM is set to **[Pressure]** HP or **[Multiple]** or. *(see page 323)*	**[AI1 Sensor Config.]** SoA1-
	[Wake Up Mode] WuPM is set to **[Pressure]** LP. *(see page 323)*	**[AI1 Sensor Config.]** WoA1-
	[Activation Mode] PFM is set to **[Outlet Pressure]** PS2. *(see page 354)*	**[AI1 Sensor Config.]** PFA1-
	[OutPres Monitoring] oPPM is set to **[Sensor]** Snsr or **[Both]** both. *(see page 396)*	**[AI1 Sensor Config]** ooA1-
[Inst. Flow Assign.] FS1A is set to **[AI1]** Ai1	-	**[AI1 Sensor Config.]** iF1-
	[LevelCtrl Strategy] LCSt is set to **[Energy Optimized]** Adu. *(see page 282)*	**[AI1 Sensor Config.]** LiF1-
	[Sleep Detect Mode] SLPM is set to **[Flow]** LF or **[Multiple]** or. *(see page 323)*	**[AI1 Sensor Config.]** SiF1-
	[Mode Selection] FLCM is not set to **[Inactive]** no. *(see page 359)*	**[AI1 Sensor Config.]** FiF1-
	[Flow limitation Mode] FLM is not set to **[No]** no. *(see page 370)*	**[AI1 Sensor Config.]** LF1-
	[HighFlow Activation] HFPM is not set to **[No]** no. *(see page 400)*	**[AI1 Sensor Config.]** HiF1-
	• **[Booster Control]** bCM is set to **[Yes]** YES • **[Booster S/D Condition]** bSdC is set to **[Speed+Flow]** SPFL. *(see page 252)*	**[AI1 Sensor Config.]** biF1-
[Pump Flow Assign.] FS2A is set to **[AI1]** Ai1	-	**[AI1 Sensor Config.]** PF1-
	[PumpLF Monitoring] PLFM is set to **[Flow]** 9 or **[Flow vs Speed]** 9n. *(see page 384)*	**[AI1 Sensor Config.]** nPF1-
NOTE: The list of parameters is the same for each **[AI1 Sensor Config.]** menu.		

If...	And...	Then following menu will be displayed:
[Level Sensor Assign] LCSA is set to **[AI1]** AI1	*(see page 282)*	**[AI1 Sensor Config.]** LCAI-
NOTE: The list of parameters is the same for each **[AI1 Sensor Config.]** menu.		

[AI1 Type] AI1t

Configuration of analog input AI1.

Setting	Code / Value	Description
[Voltage]	10U	0-10 Vdc **Factory setting**
[Current]	0A	0-20 mA

[AI1 min value] U1L ★

AI1 voltage scaling parameter of 0%.

This parameter can be accessed if **[AI1 Type]** AI1t is set to **[Voltage]** 10U.

Setting	Description
0.0...10.0 Vdc	Setting range **Factory setting**: 0.0 Vdc

[AI1 max value] U1H ★

AI1 voltage scaling parameter of 100%.

This parameter can be accessed if **[AI1 Type]** AI1t is set to **[Voltage]** 10U.

Setting	Description
0.0...10.0 Vdc	Setting range **Factory setting**: 10.0 Vdc

[AI1 min. value] CrL1 ★

AI1 current scaling parameter of 0%.

This parameter can be accessed if **[AI1 Type]** AI1t is set to **[Current]** 0A.

Setting	Description
0.0...20.0 mA	Setting range **Factory setting**: 0.0 mA

[AI1 max. value] CrH1 ★

AI1 current scaling parameter of 100%.

This parameter can be accessed if **[AI1 Type]** AI1t is set to **[Current]** 0A.

Setting	Description
0.0...20.0 mA	Setting range **Factory setting**: 20.0 mA

[AI1 Lowest Process] AI1J

AI1 lowest process.

Setting	Description
-32,767...32,767	Setting range. Value in application customer unit. **Factory setting**: 0

[AI1 Highest Process] *AI1K*

AI1 highest process.

Setting	Description
-32,767...32,767	Setting range. Value in application customer unit **Factory setting**: 0

[AI1 range] *AI1L*

AI1 scaling selection.

This parameter can be accessed if **[AI1 Type]** *AI1t* is set to **[Current]** *0A*.

This parameter is forced to **[0-100%]** *Pos* if:

- **[AI1 Type]** *AI1t* is not set to **[Current]** *0A*, or
- **[AI1 min. value]** *CrL1* is lower than 3.0 mA.

Setting	Code / Value	Description
[0-100%]	*Pos*	Unidirectional: AI1 current scaling is 0% up to 100%. **Factory setting**
[-/+100%]	*PosnEG*	Bidirectional: AI1 current scaling is -100% up to 100%. **[AI1 min. value]** *CrL1* corresponds to -100%. **[AI1 max. value]** *CrH1* corresponds to 100%.

[AI2 sensor config.] Menu

About This Menu

Access of **[AI2 Sensor Config.]** menu depends of the sensor assigned to this input.

The following table shows the **[AI2 Sensor Config.]** menus displayed in relation with the sensor and the applicative function used.

If...	And...	Then following menu will be displayed:
[InletPres Assign] P S I A is set to **[AI2]** A I 2	-	**[AI2 Sensor Config.]** I C A 2 -
	[Priming Pump Assign] P P o A is not set to **[No]** n o *(see page 366)*	**[AI2 Sensor Config.]** P P A 2 -
	[InletPres Monitoring] I P P M is not set to **[No]** n o *(see page 391)*	**[AI2 Sensor Config.]** I P A 2 -
[OutletPres Assign] P S 2 A is set to **[AI2]** A I 2	-	**[AI2 Sensor Config.]** o C A 2 -
	[Sleep Detect Mode] S L P M is set to **[Pressure]** H P or **[Multiple]** o r. *(see page 323)*	**[AI2 Sensor Config.]** S o A 2 -
	[Wake Up Mode] W U P M is set to **[Pressure]** L P. *(see page 323)*	**[AI2 Sensor Config.]** W o A 2 -
	[Activation Mode] P F M is set to **[Outlet Pressure]** P S 2. *(see page 354)*	**[AI2 Sensor Config.]** P F A 2 -
	[OutPres Monitoring] o P P M is set to **[Sensor]** S n S r or **[Both]** b o t h. *(see page 396)*	**[AI2 Sensor Config]** o o A 2 -
[Inst. Flow Assign.] F S I A is set to **[AI2]** A I 2	-	**[AI2 Sensor Config.]** I F 2 -
	[LevelCtrl Strategy] L C S t is set to **[Energy Optimized]** A d U. *(see page 282)*	**[AI2 Sensor Config.]** L I F 2 -
	[Sleep Detect Mode] S L P M is set to **[Flow]** L F or **[Multiple]** o r. *(see page 323)*	**[AI2 Sensor Config.]** S I F 2 -
	[Mode Selection] F L C M is not set to **[Inactive]** n o. *(see page 359)*	**[AI2 Sensor Config.]** F I F 2 -
	[Flow limitation Mode] F L M is not set to **[No]** n o. *(see page 370)*	**[AI2 Sensor Config.]** L F 2 -
	[HighFlow Activation] H F P M is not set to **[No]** n o. *(see page 400)*	**[AI2 Sensor Config.]** H I F 2 -
	• **[Booster Control]** b C M is set to **[Yes]** Y E S • **[Booster S/D Condition]** b S d C is set to **[Speed+Flow]** S P F L. *(see page 252)*	**[AI2 Sensor Config.]** b I F 2 -
[Pump Flow Assign.] F S 2 A is set to **[AI2]** A I 2	-	**[AI2 Sensor Config.]** P F 2 -
	[PumpLF Monitoring] P L F M is set to **[Flow]** 9 or **[Flow vs Speed]** 9 n. *(see page 384)*	**[AI2 Sensor Config.]** n P F 2 -
NOTE: The list of parameters is the same for each **[AI2 Sensor Config.]** menu.		

If...	And...	Then following menu will be displayed:
[Level Sensor Assign] LCSA is set to **[AI2]** AI2	*(see page 282)*	**[AI2 Sensor Config.]** LCA2 -
NOTE: The list of parameters is the same for each **[AI2 Sensor Config.]** menu.		

[AI2 Type] AI2t

Configuration of analog input AI2.

Setting	Code / Value	Description
[Voltage]	10U	0-10 Vdc **Factory setting**
[Current]	0A	0-20 mA

[AI2 min value] UIL2 ★

AI2 voltage scaling parameter of 0%.

This parameter can be accessed if **[AI2 Type]** AI2t is set to **[Voltage]** 10U.

Identical to **[AI1 min value]** UIL1 *(see page 219)*.

[AI2 max value] UIH2 ★

AI2 voltage scaling parameter of 100%.

This parameter can be accessed if **[AI2 Type]** AI2t is set to **[Voltage]** 10U.

Identical to **[AI1 max value]** UIH1 *(see page 219)*.

[AI2 min. value] CrL2 ★

AI2 current scaling parameter of 0%.

This parameter can be accessed if **[AI2 Type]** AI2t is set to **[Current]** oA.

Identical to **[AI1 min. value]** CrL1 *(see page 219)*.

[AI2 max. value] CrH2 ★

AI2 current scaling parameter of 100%.

This parameter can be accessed if **[AI2 Type]** AI2t is set to **[Current]** oA.

Identical to **[AI1 max. value]** CrH1 *(see page 219)*.

[AI2 Lowest Process] AI2J

AI2 lowest process.

Identical to **[AI1 Lowest Process]** AI1J *(see page 219)*.

[AI2 Highest Process] AI2K

AI2 highest process.

Identical to **[AI1 Highest Process]** AI1K *(see page 220)*.

[AI2 range] AI2L

AI2 scaling selection.

This parameter can be accessed if **[AI2 Type]** AI2t is set to **[Current]** 0A.

Identical to **[AI1 range]** AI1L *(see page 220)*.

[AI3 sensor config.] Menu

About This Menu

Access of **[AI3 Sensor Config.]** menu depends of the sensor assigned to this input.

The following table shows the **[AI3 Sensor Config.]** menus displayed in relation with the sensor and the applicative function used.

If...	And...	Then following menu will be displayed:
[InletPres Assign] P S I A is set to **[AI3]** A I 3	-	**[AI3 Sensor Config.]** I C A 3 -
	[Priming Pump Assign] P P o A is not set to **[No]** n o *(see page 366)*	**[AI3 Sensor Config.]** P P A 3 -
	[InletPres Monitoring] I P P M is not set to **[No]** n o *(see page 391)*	**[AI3 Sensor Config.]** I P A 3 -
[OutletPres Assign] P S 2 A is set to **[AI3]** A I 3	-	**[AI3 Sensor Config.]** o C A 3 -
	[Sleep Detect Mode] S L P M is set to **[Pressure]** H P or **[Multiple]** o r. *(see page 323)*	**[AI3 Sensor Config.]** S o A 3 -
	[Wake Up Mode] W u P M is set to **[Pressure]** L P. *(see page 323)*	**[AI3 Sensor Config.]** W o A 3 -
	[Activation Mode] P F M is set to **[Outlet Pressure]** P S 2. *(see page 354)*	**[AI3 Sensor Config.]** P F A 3 -
	[OutPres Monitoring] o P P M is set to **[Sensor]** S n S r or **[Both]** b o t h. *(see page 396)*	**[AI3 Sensor Config]** o o A 3 -
[Inst. Flow Assign.] F S I A is set to **[AI3]** A I 3	-	**[AI3 Sensor Config.]** I F 3 -
	[LevelCtrl Strategy] L C S t is set to **[Energy Optimized]** A d u. *(see page 282)*	**[AI3 Sensor Config.]** L I F 3 -
	[Sleep Detect Mode] S L P M is set to **[Flow]** L F or **[Multiple]** o r. *(see page 323)*	**[AI3 Sensor Config.]** S I F 3 -
	[Mode Selection] F L C M is not set to **[Inactive]** n o. *(see page 359)*	**[AI3 Sensor Config.]** F I F 3 -
	[Flow limitation Mode] F L M is not set to **[No]** n o. *(see page 370)*	**[AI3 Sensor Config.]** L F 3 -
	[HighFlow Activation] H F P M is not set to **[No]** n o. *(see page 400)*	**[AI3 Sensor Config.]** H I F 3 -
	• **[Booster Control]** b C M is set to **[Yes]** Y E S • **[Booster S/D Condition]** b S d C is set to **[Speed+Flow]** S P F L. *(see page 252)*	**[AI3 Sensor Config.]** b I F 3 -
NOTE: The list of parameters is the same for each **[AI3 Sensor Config.]** menu.		

If...	And...	Then following menu will be displayed:
[Pump Flow Assign.] F S 2 A is set to [AI3] A I 3	-	[AI3 Sensor Config.] P F 3 -
	[PumpLF Monitoring] P L F M is set to [Flow] 9 or [Flow vs Speed] 9 n. (see page 384)	[AI3 Sensor Config.] n P F 3 -
[Level Sensor Assign] L C S A is set to [AI3] A I 3	(see page 282)	[AI3 Sensor Config.] L C A 3 -
NOTE: The list of parameters is the same for each [AI3 Sensor Config.] menu.		

[AI3 Type] A I 3 t

Configuration of analog input AI3.

Setting	Code / Value	Description
[Voltage]	10 u	0-10 Vdc
[Current]	0 A	0-20 mA **Factory setting**

[AI3 min value] u I L 3 ★

AI3 voltage scaling parameter of 0%.

This parameter can be accessed if [AI3 Type] A I 3 t is set to [Voltage] 10 u.

Identical to [AI1 min value] u I L 1 (see page 219).

[AI3 max value] u I H 3 ★

AI3 voltage scaling parameter of 100%.

This parameter can be accessed if [AI3 Type] A I 3 t is set to [Voltage] 10 u.

Identical to [AI1 max value] u I H 1 (see page 219).

[AI3 min. value] C r L 3 ★

AI3 current scaling parameter of 0%.

This parameter can be accessed if [AI3 Type] A I 3 t is set to [Current] o A.

Identical to [AI1 min. value] C r L 1 (see page 219).

[AI3 max. value] C r H 3 ★

AI3 current scaling parameter of 100%.

This parameter can be accessed if [AI3 Type] A I 3 t is set to [Current] o A.

Identical to [AI1 max. value] C r H 1 (see page 219).

[AI3 Lowest Process] A I 3 J

AI3 lowest process.

Identical to [AI1 Lowest Process] A I 1 J (see page 219).

[AI3 Highest Process] A I 3 K

AI3 highest process.

Identical to [AI1 Highest Process] A I 1 K (see page 220).

[AI3 range] A I 3 L

AI3 scaling selection.

This parameter can be accessed if [AI3 Type] A I 3 t is set to [Current] 0 A.

Identical to [AI1 range] A I 1 L (see page 220).

[AI4 sensor config.] Menu

About This Menu

Access of **[AI4 Sensor Config.]** menu depends of the sensor assigned to this input.

The following table shows the **[AI4 Sensor Config.]** menus displayed in relation with the sensor and the applicative function used.

If...	And...	Then following menu will be displayed:
[InletPres Assign] P S I A is set to **[AI4]** A I 4	-	**[AI4 Sensor Config.]** I C A 4 -
	[Priming Pump Assign] P P o A is not set to **[No]** n o *(see page 366)*	**[AI4 Sensor Config.]** P P A 4 -
	[InletPres Monitoring] I P P M is not set to **[No]** n o *(see page 391)*	**[AI4 Sensor Config.]** I P A 4 -
[OutletPres Assign] P S 2 A is set to **[AI4]** A I 4	-	**[AI4 Sensor Config.]** o C A 4 -
	[Sleep Detect Mode] S L P M is set to **[Pressure]** H P or **[Multiple]** o r. *(see page 323)*	**[AI4 Sensor Config.]** S o A 4 -
	[Wake Up Mode] W u P M is set to **[Pressure]** L P. *(see page 323)*	**[AI4 Sensor Config.]** W o A 4 -
	[Activation Mode] P F M is set to **[Outlet Pressure]** P S 2. *(see page 354)*	**[AI4 Sensor Config.]** P F A 4 -
	[OutPres Monitoring] o P P M is set to **[Sensor]** S n S r or **[Both]** b o t h. *(see page 396)*	**[AI4 Sensor Config]** o o A 4 -
[Inst. Flow Assign.] F S I A is set to **[AI4]** A I 4	-	**[AI4 Sensor Config.]** I F 4 -
	[LevelCtrl Strategy] L C S t is set to **[Energy Optimized]** A d u. *(see page 282)*	**[AI4 Sensor Config.]** LIF4-
	[Sleep Detect Mode] S L P M is set to **[Flow]** L F or **[Multiple]** o r. *(see page 323)*	**[AI4 Sensor Config.]** S I F 4 -
	[Mode Selection] F L C M is not set to **[Inactive]** n o. *(see page 359)*	**[AI4 Sensor Config.]** F I F 4 -
	[Flow limitation Mode] F L M is not set to **[No]** n o. *(see page 370)*	**[AI4 Sensor Config.]** L F 4 -
	[HighFlow Activation] H F P M is not set to **[No]** n o. *(see page 400)*	**[AI4 Sensor Config.]** H I F 4 -
	• **[Booster Control]** b C M is set to **[Yes]** Y E S • **[Booster S/D Condition]** b S d C is set to **[Speed+Flow]** S P F L. *(see page 252)*	**[AI4 Sensor Config.]** b I F 4 -
NOTE: The list of parameters is the same for each **[AI4 Sensor Config.]** menu.		

If...	And...	Then following menu will be displayed:
[Pump Flow Assign.] F S 2 A is set to [AI4] A I 4	-	[AI4 Sensor Config.] P F 4 -
	[PumpLF Monitoring] P L F M is set to [Flow] 9 or [Flow vs Speed] 9 n. (see page 384)	[AI4 Sensor Config.] n P F 4 -
[Level Sensor Assign] L C S A is set to [AI4] A I 4	(see page 282)	[AI4 Sensor Config.] L C A 4 -
NOTE: The list of parameters is the same for each [AI4 Sensor Config.] menu.		

[AI4 Type] A I 4 t

Configuration of analog input AI4.

Setting	Code / Value	Description
[Voltage]	10u	0-10 Vdc
[Current]	0A	0-20 mA **Factory setting**

[AI4 min value] u I L 4 ★

AI4 voltage scaling parameter of 0%.

This parameter can be accessed if **[AI4 Type]** A I 4 t is set to **[Voltage]** 10u.

Identical to **[AI1 min value]** u I L 1 (see page 219).

[AI4 max value] u I H 4 ★

AI4 voltage scaling parameter of 100%.

This parameter can be accessed if **[AI4 Type]** A I 4 t is set to **[Voltage]** 10u.

Identical to **[AI1 max value]** u I H 1 (see page 219).

[AI4 min. value] C r L 4 ★

AI4 current scaling parameter of 0%.

This parameter can be accessed if **[AI4 Type]** A I 4 t is set to **[Current]** oA.

Identical to **[AI1 min. value]** C r L 1 (see page 219).

[AI4 max. value] C r H 4 ★

AI4 current scaling parameter of 100%.

This parameter can be accessed if **[AI4 Type]** A I 4 t is set to **[Current]** oA.

Identical to **[AI1 max. value]** C r H 1 (see page 219).

[AI4 Lowest Process] A I 4 J

AI4 lowest process.

Identical to **[AI1 Lowest Process]** A I 1 J (see page 219).

[AI4 Highest Process] A I 4 K

AI4 highest process.

Identical to **[AI1 Highest Process]** A I 1 K (see page 220).

[AI4 range] A I 4 L

AI4 scaling selection.

This parameter can be accessed if **[AI4 Type]** A I 4 t is set to **[Current]** 0A.

Identical to **[AI1 range]** A I 1 L (see page 220).

[AI5 sensor config.] Menu

About This Menu

Access of **[AI5 Sensor Config.]** menu depends of the sensor assigned to this input.

The following table shows the **[AI5 Sensor Config.]** menus displayed in relation with the sensor and the applicative function used.

If...	And...	Then following menu will be displayed:
[InletPres Assign] P S I A is set to **[AI5]** A I 5	-	**[AI5 Sensor Config.]** I C A S -
	[Priming Pump Assign] P P o A is not set to **[No]** n o *(see page 366)*	**[AI5 Sensor Config.]** P P A S -
	[InletPres Monitoring] I P P M is not set to **[No]** n o *(see page 391)*	**[AI5 Sensor Config.]** I P A S -
[OutletPres Assign] P S 2 A is set to **[AI5]** A I 5	-	**[AI5 Sensor Config.]** o C A S -
	[Sleep Detect Mode] S L P M is set to **[Pressure]** H P or **[Multiple]** o r. *(see page 323)*	**[AI5 Sensor Config.]** S o A S -
	[Wake Up Mode] W u P M is set to **[Pressure]** L P. *(see page 323)*	**[AI5 Sensor Config.]** W o A S -
	[Activation Mode] P F M is set to **[Outlet Pressure]** P S 2. *(see page 354)*	**[AI5 Sensor Config.]** P F A S -
	[OutPres Monitoring] o P P M is set to **[Sensor]** S n S r or **[Both]** b o t h. *(see page 396)*	**[AI5 Sensor Config.]** o o A S -
[Inst. Flow Assign.] F S I A is set to **[AI5]** A I 5	-	**[AI5 Sensor Config.]** I F S -
	[LevelCtrl Strategy] L C S t is set to **[Energy Optimized]** A d u. *(see page 282)*	**[AI5 Sensor Config.]** L I F S -
	[Sleep Detect Mode] S L P M is set to **[Flow]** L F or **[Multiple]** o r. *(see page 323)*	**[AI5 Sensor Config.]** S I F S -
	[Mode Selection] F L C M is not set to **[Inactive]** n o. *(see page 359)*	**[AI5 Sensor Config.]** F I F S -
	[Flow limitation Mode] F L M is not set to **[No]** n o. *(see page 370)*	**[AI5 Sensor Config.]** L F S -
	[HighFlow Activation] H F P M is not set to **[No]** n o. *(see page 400)*	**[AI5 Sensor Config.]** H I F S -
	• **[Booster Control]** b C M is set to **[Yes]** Y E S • **[Booster S/D Condition]** b S d C is set to **[Speed+Flow]** S P F L. *(see page 252)*	**[AI5 Sensor Config.]** b I F S -
NOTE: The list of parameters is the same for each **[AI5 Sensor Config.]** menu.		

If...	And...	Then following menu will be displayed:
[Pump Flow Assign.] F S 2 A is set to [AI5] A I 5	-	[AI5 Sensor Config.] P F S -
	[PumpLF Monitoring] P L F M is set to [Flow] 9 or [Flow vs Speed] 9 n. (see page 384)	[AI5 Sensor Config.] n P F S -
[Level Sensor Assign] L C S A is set to [AI5] A I 5	(see page 282)	[AI5 Sensor Config.] L C A S -
NOTE: The list of parameters is the same for each **[AI5 Sensor Config.]** menu.		

[AI5 Type] A I 5 t

Configuration of analog input AI5.

Setting	Code / Value	Description
[Voltage]	10u	0-10 Vdc
[Current]	0A	0-20 mA **Factory setting**

[AI5 min value] u I L 5 ★

AI5 voltage scaling parameter of 0%.

This parameter can be accessed if **[AI5 Type]** A I 5 t is set to **[Voltage]** 10u.

Identical to **[AI1 min value]** u I L 1 (see page 219).

[AI5 max value] u I H 5 ★

AI5 voltage scaling parameter of 100%.

This parameter can be accessed if **[AI5 Type]** A I 5 t is set to **[Voltage]** 10u.

Identical to **[AI1 max value]** u I H 1 (see page 219).

[AI5 min. value] C r L 5 ★

AI5 current scaling parameter of 0%.

This parameter can be accessed if **[AI5 Type]** A I 5 t is set to **[Current]** oA.

Identical to **[AI1 min. value]** C r L 1 (see page 219).

[AI5 max. value] C r H 5 ★

AI5 current scaling parameter of 100%.

This parameter can be accessed if **[AI5 Type]** A I 5 t is set to **[Current]** oA.

Identical to **[AI1 max. value]** C r H 1 (see page 219).

[AI5 Lowest Process] A I 5 J

AI5 lowest process.

Identical to **[AI1 Lowest Process]** A I 1 J (see page 219).

[AI5 Highest Process] A I 5 K

AI5 highest process.

Identical to **[AI1 Highest Process]** A I 1 K (see page 220).

[AI5 range] A I 5 L

AI5 scaling selection.

This parameter can be accessed if **[AI5 Type]** A I 5 t is set to **[Current]** 0A.

Identical to **[AI1 range]** A I 1 L (see page 220).

[PI5 Sensor Config] Menu

About This Menu

Access of **[DI5 Pulse Sensor Config.]** menu depends of the sensor assigned to this input.

The following table shows the **[DI5 Pulse Sensor Config.]** menus displayed in relation with the sensor and the applicative function used.

If...	And...	Then following menu will be displayed:
[Inst. Flow Assign.] F S I A is set to **[Di5 PulseInput Assignment]** P I 5	-	**[DI5 Pulse Sensor Config.]** I F B -
	[LevelCtrl Strategy] L C S t is set to **[Energy Optimized]** A d u. *(see page 282)*	**[DI5 Pulse Sensor Config.]** L I P S -
	[Sleep Detect Mode] S L P M is set to **[Flow]** L F or **[Multiple]** o r. *(see page 323)*	**[DI5 Pulse Sensor Config.]** S I F B -
	[Mode Selection] F L C M is not set to **[Inactive]** n o. *(see page 359)*	**[DI5 Pulse Sensor Config.]** F I F B -
	[Flow limitation Mode] F L M is not set to **[No]** n o. *(see page 370)*	**[DI5 Pulse Sensor Config.]** L F B -
	[HighFlow Activation] H F P M is not set to **[No]** n o. *(see page 400)*	**[DI5 Pulse Sensor Config.]** H I F B -
	• **[Booster Control]** b C M is set to **[Yes]** Y E S • **[Booster S/D Condition]** b S d C is set to **[Speed+Flow]** S P F L. *(see page 252)*	**[DI5 Pulse Sensor Config.]** b I P S -
[Pump Flow Assign.] F S 2 A is set to **[Di5 PulseInput Assignment]** P I 5	-	**[DI5 Pulse Sensor Config.]** P F B -
	[PumpLF Monitoring] P L F M is set to **[Flow]** 9 or **[Flow vs Speed]** 9 n. *(see page 384)*	**[DI5 Pulse Sensor Config.]** n P F B -
NOTE: The list of parameters is the same for each **[DI5 Pulse Sensor Config.]** menu.		

[DI5 PulseInput Low Freq] P I L 5

Pulse input DI5 low frequency.

Setting	Description
0.00...30,000.00 Hz	Setting range **Factory setting**: 0.00 Hz

[DI5 PulseInput High Freq] P I H 5

Pulse input DI5 high frequency.

Setting	Description
0.00...30.00 kHz	Setting range **Factory setting**: 30.00 kHz

[DI5 Min Process] P I 5 J

Minimum process value for selected input.

Setting	Description
-32,767...32,767	Setting range **Factory setting**: 0

[DI5 Max Process] P I 5 K

Maximum process value for selected input.

Setting	Description
-32,767...32,767	Setting range **Factory setting**: 0

[PI6 Sensor Config] Menu

About This Menu

Access of **[DI6 Pulse Sensor Config.]** menu depends of the sensor assigned to this input.

The following table shows the **[DI6 Pulse Sensor Config.]** menus displayed in relation with the sensor and the applicative function used.

If...	And...	Then following menu will be displayed:
[Inst. Flow Assign.] F 5 I A is set to **[Di6 PulseInput Assignment]** P I 6	-	**[DI6 Pulse Sensor Config.]** I F 9 -
	[LevelCtrl Strategy] L C 5 t is set to **[Energy Optimized]** A d u. *(see page 282)*	**[DI6 Pulse Sensor Config.]** L I P 6 -
	[Sleep Detect Mode] 5 L P M is set to **[Flow]** L F or **[Multiple]** o r. *(see page 323)*	**[DI6 Pulse Sensor Config.]** 5 I F 9 -
	[Mode Selection] F L C M is not set to **[Inactive]** n o. *(see page 359)*	**[DI6 Pulse Sensor Config.]** F I F 9 -
	[Flow limitation Mode] F L M is not set to **[No]** n o. *(see page 370)*	**[DI6 Pulse Sensor Config.]** L F 9 -
	[HighFlow Activation] H F P M is not set to **[No]** n o. *(see page 400)*	**[DI6 Pulse Sensor Config.]** H I F 9 -
	• **[Booster Control]** b C M is set to **[Yes]** Y E S • **[Booster S/D Condition]** b S d C is set to **[Speed+Flow]** S P F L. *(see page 252)*	**[DI6 Pulse Sensor Config.]** b I P 6 -
[Pump Flow Assign.] F 5 2 A is set to **[Di6 PulseInput Assignment]** P I 6	-	**[DI6 Pulse Sensor Config.]** P F 9 -
	[PumpLF Monitoring] P L F M is set to **[Flow]** 9 or **[Flow vs Speed]** 9 n. *(see page 384)*	**[DI6 Pulse Sensor Config.]** n P F 9 -
NOTE: The list of parameters is the same for each **[DI6 Pulse Sensor Config.]** menu.		

[DI6 PulseInput Low Freq] P I L 6

Pulse input DI6 low frequency.

Setting	Description
0.00...30,000.00 Hz	Setting range **Factory setting**: 0.00 Hz

[DI6 PulseInput High Freq] P ıHb

Pulse input DI6 high frequency.

Setting	Description
0.00...30.00 kHz	Setting range **Factory setting**: 30.00 kHz

[DI6 Min Process] P ıbJ

Minimum process value for selected input.

Setting	Description
-32,767...32,767	Setting range **Factory setting**: 0

[DI6 Max Process] P ıbK

Maximum process value for selected input.

Setting	Description
-32,767...32,767	Setting range **Factory setting**: 0

[AIV1 configuration] Menu

About This Menu

Access of **[AIV1 Sensor Config.]** menu depends of the sensor assigned to this input.

The following table shows the **[AIV1 Sensor Config.]** menus displayed in relation with the sensor and the applicative function used.

If...	And...	Then following menu will be displayed:
[InletPres Assign] PS1A is set to **[AI Virtual 1]** AIV1	-	**[AIV1 Sensor Config.]** IC V1-
	[Priming Pump Assign] PPOA is not set to **[No]** NO *(see page 366)*	**[AIV1 Sensor Config.]** PPV1-
	[InletPres Monitoring] IPPM is not set to **[No]** NO *(see page 391)*	**[AIV1 Sensor Config.]** IPV1-
[OutletPres Assign] PS2A is set to **[AI Virtual 1]** AIV1	-	**[AIV1 Sensor Config.]** OCV1-
	[Sleep Detect Mode] SLPM is set to **[Pressure]** HP or **[Multiple]** OR. *(see page 323)*	**[AIV1 Sensor Config.]** SOV1-
	[Wake Up Mode] WUPM is set to **[Pressure]** LP. *(see page 323)*	**[AIV1 Sensor Config.]** WOV1-
	[Activation Mode] PFM is set to **[Outlet Pressure]** PS2. *(see page 354)*	**[AIV1 Sensor Config.]** PFV1-
	[OutPres Monitoring] OPPM is set to **[Sensor]** SnSr or **[Both]** both. *(see page 396)*	**[AIV1 Sensor Config]** OOV1-
[Inst. Flow Assign.] FS1A is set to **[AI Virtual 1]** AIV1	-	**[AIV1 Sensor Config.]** IFV1-
	[LevelCtrl Strategy] LCSt is set to **[Energy Optimized]** Adu. *(see page 282)*	**[AIV1 Sensor Config.]** LIV1-
	[Sleep Detect Mode] SLPM is set to **[Flow]** LF or **[Multiple]** OR. *(see page 323)*	**[AIV1 Sensor Config.]** SIV1-
	[Mode Selection] FLCM is not set to **[Inactive]** NO. *(see page 359)*	**[AIV1 Sensor Config.]** FIV1-
	[Flow limitation Mode] FLM is not set to **[No]** NO. *(see page 370)*	**[AIV1 Sensor Config.]** LFV1-
	[HighFlow Activation] HFPM is not set to **[No]** NO. *(see page 400)*	**[AIV1 Sensor Config.]** HIV1-
	• **[Booster Control]** bCM is set to **[Yes]** YES • **[Booster S/D Condition]** bSdC is set to **[Speed+Flow]** SPFL. *(see page 252)*	**[AIV1 Sensor Config.]** bIV1-
[Pump Flow Assign.] FS2A is set to **[AI Virtual 1]** AIV1	-	**[AIV1 Sensor Config.]** PFV1-
	[PumpLF Monitoring] PLFM is set to **[Flow]** Q or **[Flow vs Speed]** Qn. *(see page 384)*	**[AIV1 Sensor Config.]** nPV1-
NOTE: The list of parameters is the same for each **[AIV1 Sensor Config.]** menu.		

If...	And...	Then following menu will be displayed:
[Level Sensor Assign] LCSA is set to **[AI Virtual 1]** AIV1	*(see page 282)*	**[AIV1 Sensor Config.]** LCV1-
NOTE: The list of parameters is the same for each **[AIV1 Sensor Config.]** menu.		

[AIV1 Channel Assignment] AIC1

Channel assignment for virtual analog input AIV1.

Setting	Code / Value	Description
[Not Configured]	no	Not assigned **Factory setting**
[Ref. Freq-Modbus]	Mdb	Reference frequency via Modbus
[Ref. Freq-CANopen]	CAn	Reference frequency via CANopen if a CANopen module has been inserted
[Ref. Freq-Com. Module]	nEt	Reference frequency via fieldbus module if a fieldbus module has been inserted
[Embedded Ethernet]	EtH	Embedded Ethernet

[AIV1 Lowest Process] AU1L

AI virtual 1: minimum process value.

Setting	Description
-32,767...32,767	Setting range. Value in application customer unitt **Factory setting**: 0

[AIV1 Highest Process] AU1K

AI virtual 1: maximum process value.

Setting	Description
-32,767...32,767	Setting range. Value in application customer unitt **Factory setting**: 0

[AIV2 configuration] Menu

About This Menu

Access of **[AIV2 Sensor Config.]** menu depends of the sensor assigned to this input.

The following table shows the **[AIV2 Sensor Config.]** menus displayed in relation with the sensor and the applicative function used.

If...	And...	Then following menu will be displayed:
[InletPres Assign] *PSIA* is set to **[AI Virtual 2]** *AIV2*	-	**[AIV2 Sensor Config.]** *ICV2* -
	[Priming Pump Assign] *PPOA* is not set to **[No]** *nO* *(see page 366)*	**[AIV2 Sensor Config.]** *PPV2* -
	[InletPres Monitoring] *IPPM* is not set to **[No]** *nO* *(see page 391)*	**[AIV2 Sensor Config.]** *IPV2* -
[OutletPres Assign] *PS2A* is set to **[AI Virtual 2]** *AIV2*	-	**[AIV2 Sensor Config.]** *OCV2* -
	[Sleep Detect Mode] *SLPM* is set to **[Pressure]** *HP* or **[Multiple]** *Or*. *(see page 323)*	**[AIV2 Sensor Config.]** *SOV2* -
	[Wake Up Mode] *WUPM* is set to **[Pressure]** *LP*. *(see page 323)*	**[AIV2 Sensor Config.]** *WOV2* -
	[Activation Mode] *PFM* is set to **[Outlet Pressure]** *PS2*. *(see page 354)*	**[AIV2 Sensor Config.]** *PFV2* -
	[OutPres Monitoring] *OPPM* is set to **[Sensor]** *SnSr* or **[Both]** *both*. *(see page 396)*	**[AIV2 Sensor Config]** *OOV2* -
[Inst. Flow Assign.] *FSIA* is set to **[AI Virtual 2]** *AIV2*	-	**[AIV2 Sensor Config.]** *IFV2* -
	[LevelCtrl Strategy] *LCSt* is set to **[Energy Optimized]** *Adu*. *(see page 282)*	**[AIV2 Sensor Config.]** *LIV2* -
	[Sleep Detect Mode] *SLPM* is set to **[Flow]** *LF* or **[Multiple]** *Or*. *(see page 323)*	**[AIV2 Sensor Config.]** *SIV2* -
	[Mode Selection] *FLCM* is not set to **[Inactive]** *nO*. *(see page 359)*	**[AIV2 Sensor Config.]** *FIV2* -
	[Flow limitation Mode] *FLM* is not set to **[No]** *nO*. *(see page 370)*	**[AIV2 Sensor Config.]** *LFV2* -
	[HighFlow Activation] *HFPM* is not set to **[No]** *nO*. *(see page 400)*	**[AIV2 Sensor Config.]** *HIV2* -
	• **[Booster Control]** *bCM* is set to **[Yes]** *YES* • **[Booster S/D Condition]** *bSdC* is set to **[Speed+Flow]** *SPFL*. *(see page 252)*	**[AIV2 Sensor Config.]** *bIV2* -
[Pump Flow Assign.] *FS2A* is set to **[AI Virtual 2]** *AIV2*	-	**[AIV2 Sensor Config.]** *PFV2* -
	[PumpLF Monitoring] *PLFM* is set to **[Flow]** *Q* or **[Flow vs Speed]** *Qn*. *(see page 384)*	**[AIV2 Sensor Config.]** *nPV2* -
NOTE: The list of parameters is the same for each **[AIV2 Sensor Config.]** menu.		

If...	And...	Then following menu will be displayed:
[Level Sensor Assign] L C S A is set to **[AI Virtual 2]** A I V 2	*(see page 282)*	**[AIV2 Sensor Config.]** L C V 2 -
NOTE: The list of parameters is the same for each **[AIV2 Sensor Config.]** menu.		

[AIV2 Channel Assignment] A I C 2

Channel assignment for virtual analog input AIV2.

Identical to **[AIV1 Channel Assignment]** A I C 1 *(see page 233)*.

[AIV2 Lowest Process] A U 2 J

AI virtual 2: minimum process value.

Identical to **[AIV1 Lowest Process]** A U 1 J *(see page 233)*.

[AIV2 Highest Process] A U 2 K

AI virtual 2: maximum process value.

Identical to **[AIV1 Highest Process]** A U 1 K *(see page 233)*.

[AIV3 configuration] Menu

About This Menu

Access of **[AIV3 Sensor Config.]** menu depends of the sensor assigned to this input.

The following table shows the **[AIV3 Sensor Config.]** menus displayed in relation with the sensor and the applicative function used.

If...	And...	Then following menu will be displayed:
[InletPres Assign] *PS1A* is set to **[AI Virtual 3]** *Ai3*	-	**[AIV3 Sensor Config.]** *iCV3* -
	[Priming Pump Assign] *PPoA* is not set to **[No]** *no* *(see page 366)*	**[AIV3 Sensor Config.]** *PPV3* -
	[InletPres Monitoring] *iPPM* is not set to **[No]** *no* *(see page 391)*	**[AIV3 Sensor Config.]** *iPV3* -
[OutletPres Assign] *PS2A* is set to **[AI Virtual 3]** *Ai3*	-	**[AIV3 Sensor Config.]** *oCV3* -
	[Sleep Detect Mode] *SLPM* is set to **[Pressure]** *HP* or **[Multiple]** *or*. *(see page 323)*	**[AIV3 Sensor Config.]** *SoV3* -
	[Wake Up Mode] *WuPM* is set to **[Pressure]** *LP*. *(see page 323)*	**[AIV3 Sensor Config.]** *WoV3* -
	[Activation Mode] *PFM* is set to **[Outlet Pressure]** *PS2*. *(see page 354)*	**[AIV3 Sensor Config.]** *PFV3* -
	[OutPres Monitoring] *oPPM* is set to **[Sensor]** *Snsr* or **[Both]** *both*. *(see page 396)*	**[AIV3 Sensor Config]** *ooV3* -
[Inst. Flow Assign.] *FS1A* is set to **[AI Virtual 3]** *Ai3*	-	**[AIV3 Sensor Config.]** *iFV3* -
	[LevelCtrl Strategy] *LCSt* is set to **[Energy Optimized]** *Adu*. *(see page 282)*	**[AIV3 Sensor Config.]** *LiV3* -
	[Sleep Detect Mode] *SLPM* is set to **[Flow]** *LF* or **[Multiple]** *or*. *(see page 323)*	**[AIV3 Sensor Config.]** *SiV3* -
	[Mode Selection] *FLCM* is not set to **[Inactive]** *no*. *(see page 359)*	**[AIV3 Sensor Config.]** *FiV3* -
	[Flow limitation Mode] *FLM* is not set to **[No]** *no*. *(see page 370)*	**[AIV3 Sensor Config.]** *LFV3* -
	[HighFlow Activation] *HFPM* is not set to **[No]** *no*. *(see page 400)*	**[AIV3 Sensor Config.]** *HiV3* -
	• **[Booster Control]** *bCM* is set to **[Yes]** *YES* • **[Booster S/D Condition]** *bSdC* is set to **[Speed+Flow]** *SPFL*. *(see page 252)*	**[AIV3 Sensor Config.]** *biV3* -
[Pump Flow Assign.] *FS2A* is set to **[AI Virtual 3]** *Ai3*	-	**[AIV3 Sensor Config.]** *PFV3* -
	[PumpLF Monitoring] *PLFM* is set to **[Flow]** *q* or **[Flow vs Speed]** *qn*. *(see page 384)*	**[AIV3 Sensor Config.]** *nPV3* -
NOTE: The list of parameters is the same for each **[AIV3 Sensor Config.]** menu.		

If...	And...	Then following menu will be displayed:
[Level Sensor Assign] LCSA is set to **[AI Virtual 3]** AIV3	*(see page 282)*	**[AIV3 Sensor Config.]** LCV3-
NOTE: The list of parameters is the same for each **[AIV3 Sensor Config.]** menu.		

[AIV3 Channel Assignment] AIC3

Channel assignment for virtual analog input AIV3.

Identical to **[AIV1 Channel Assignment]** AIC1 *(see page 233)*.

[AIV3 Lowest Process] AU3L

AI virtual 3: minimum process value.

Identical to **[AIV1 Lowest Process]** AU1L *(see page 233)*.

[AIV3 Highest Process] AU3H

AI virtual 3: maximum process value.

Identical to **[AIV1 Highest Process]** AU1H *(see page 233)*.

Section 8.6
[Command and Reference] CrP - Menu

[Command and Reference] CrP - Menu

Access

[Complete settings] ➡ **[Command and Reference]**

Command and Reference Channels Parameter Can Be Accessed

Run commands (forward, reverse, stop, and so on) and references can be sent using the following channels:

Command	Reference
Terminals: Digital inputs DI	Terminals: Analog inputs AI, pulse input
Graphic Display Terminal	Graphic Display Terminal
Integrated Modbus	Integrated Modbus
CANopen®	CANopen
Fieldbus module	Fieldbus module
–	+/– speed via the Graphic Display Terminal
Integrated Ethernet Modbus TCP	Integrated Ethernet Modbus TCP

NOTE: The stop keys on the Graphic Display Terminal can be programmed as non-priority keys. A stop key can only have priority if the **[Stop Key Enable]** PSt parameter menu is set to **[Stop Key Priority]** YES or **[Stop Key Priority All]** ALL.

The behavior of the drive can be adapted according to requirements:

- **[Not separ.]** Sim: Command and reference are sent via the same channel.
- **[Separate]** SEP: Command and reference may be sent via different channels.In these configurations, control via the communication bus is performed in accordance with the DRIVECOM standard with only 5 freely assignable bits (see communication parameter manual). The application functions cannot be accessed via the communication interface.
- **[I/O profile]** io: The command and the reference can come from different channels. This configuration both simplify and extends use via the communication interface. Commands may be sent via the digital inputs on the terminals or via the communication bus. When commands are sent via a bus, they are available on a word, which acts as virtual terminals containing only digital inputs. Application functions can be assigned to the bits in this word. More than one function can be assigned to the same bit.

NOTE: Stop commands from the Graphic Display Terminal remain active even if the terminals are not the active command channel.

Reference Channel for [Not separ.] SIM, [Separate] SEP and [I/O profile] IO Configurations, PID Not Configured

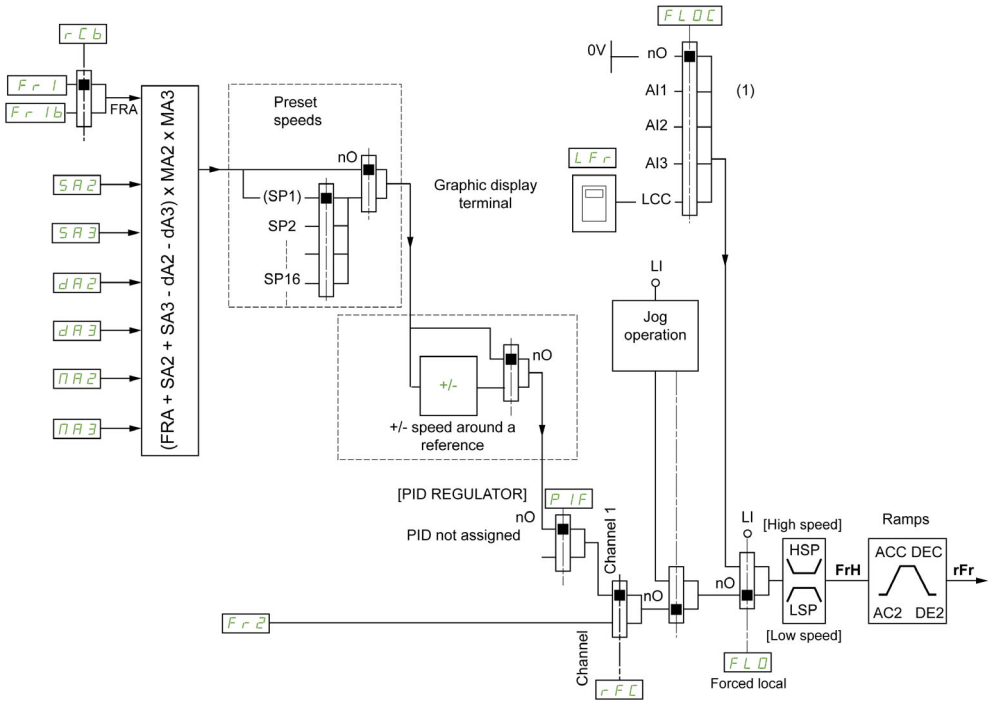

(1) **Note**: Forced local is not active in **[I/O]**.

The black square represents the factory setting assignment.

Fr1: terminals (including I/O extension module), Graphic Display Terminal, integrated Modbus, CANopen®, embedded Ethernet, and fieldbus module.

Fr1b, for SEP and IO: terminals (including I/O extension module), Graphic Display Terminal, integrated Modbus, CANopen®, embedded Ethernet, and fieldbus module.

Fr1b, for SIM: Graphic Display Terminal, only accessible if Fr1 = terminals.

SA2, SA3, dA2, dA3, MA2, MA3: terminals (including I/O extension module), Graphic Display Terminal, integrated Modbus, CANopen®, embedded Ethernet, and fieldbus module.

Fr2: terminals (including I/O extension module), Graphic Display Terminal, integrated Modbus, CANopen®, embedded Ethernet, +/– speed, and fieldbus module.

Reference Channel for [Not separ.] SIM, [Separate] SEP and [I/O profile] IO Configurations, PID Configured with PID References at the Terminals

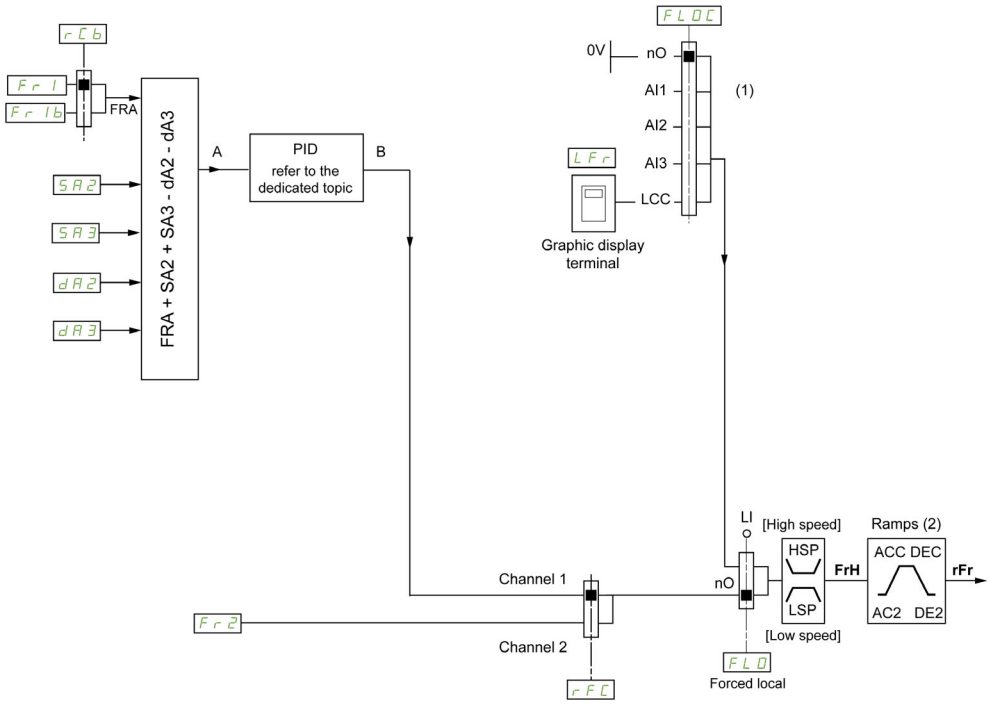

(1) **Note**: Forced local is not active in **[I/O profile]**.
(2) Ramps not active if the PID function is active in automatic mode.

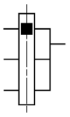

The black square represents the factory setting assignment.

Fr1: terminals (including I/O extension module), Graphic Display Terminal, integrated Modbus, CANopen®, embedded Ethernet, and fieldbus module.

Fr1b, for SEP and IO: terminals (including I/O extension module), Graphic Display Terminal, integrated Modbus, CANopen®, embedded Ethernet, and fieldbus module.

Fr1b, for SIM: Graphic Display Terminal, only accessible if Fr1 = terminals.

SA2, SA3, dA2, dA3: terminals (including I/O extension module), Graphic Display Terminal, integrated Modbus, CANopen®, embedded Ethernet, and fieldbus module.

Fr2: terminals (including I/O extension module), Graphic Display Terminal, integrated Modbus, CANopen®, embedded Ethernet, +/– speed, and fieldbus module.

Command Channel for [Not separ.] SIM configuration

Reference and command, not separate.

The command channel is determined by the reference channel. The parameters Fr1, Fr2, rFC, FLO and FLOC are common to reference and command.

Example: If the reference is Fr1 = AI1 (analog input at the terminals), control is via DI (digital input at the terminals).

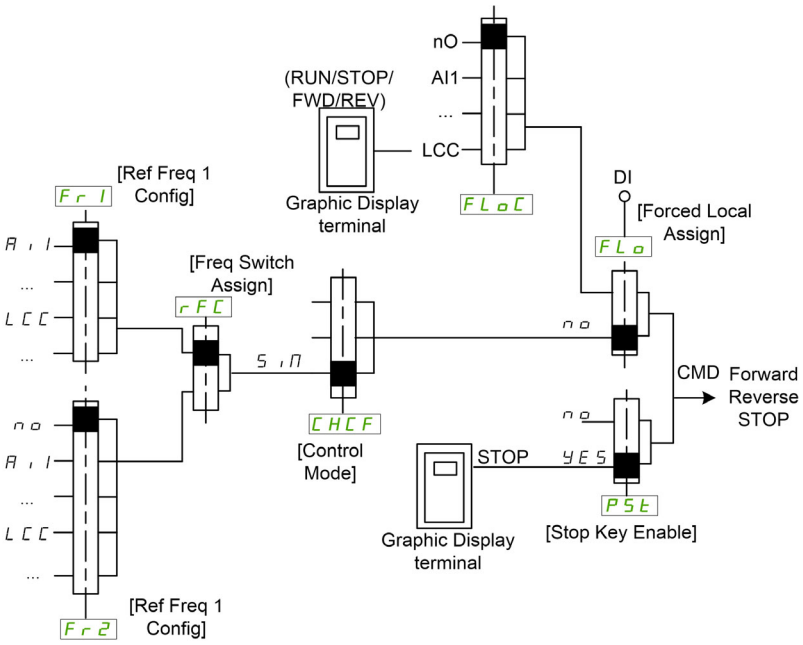

The black square represents the factory setting assignment.

Command Channel for [Separate] SEP configuration

Separated Reference and command.

The parameters FLo and FLoC are common to reference and command.

Example: If the reference is in forced local mode via AI1 (analog input at the terminals), command in forced local mode is via DI (digital input at the terminals).

The command channels Cd1 and Cd2 are independent of the reference channels Fr1, Fr1b and Fr2.

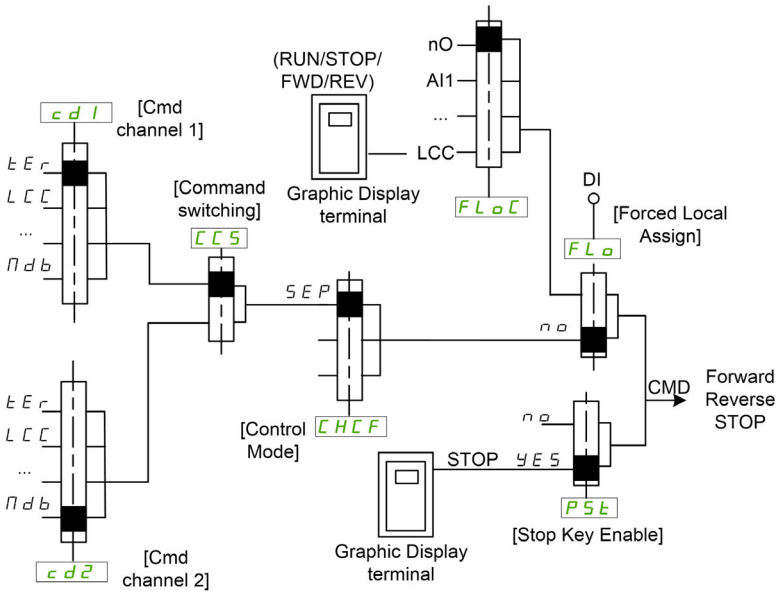

The black square represents the factory setting assignment, except for **[Control Mode]** CHCF.

[Cmd channel 1] *Cd1* and **[Cmd channel 2]** *Cd2*: Terminals, graphic display terminal, HMI Panel, integrated Modbus, integrated CANopen®, communication card

Command Channel for I/O profile *IO* configuration

Separated Reference and command, as in **[Separate]** *SEP* configuration.

The command channels *Cd1* and *Cd2* are independent of the reference channels *Fr1*, *Fr1b* and FR2.

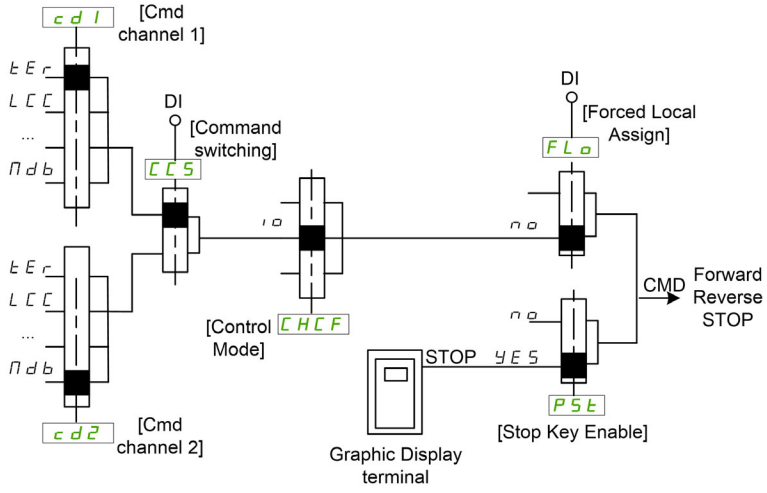

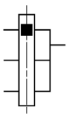

The black square represents the factory setting assignment, except for **[Control Mode]** *CHCF*.

[Cmd channel 1] *Cd1* and **[Cmd channel 2]** *Cd2*: Terminals, graphic display terminal, HMI Panel, integrated Modbus, integrated CANopen®, communication card.

A command or an action can be assigned:

- To a fixed channel by selecting a Digital input (Dix) or a Cxxx bit:
  - By selecting, for example, LI3, this action will be triggered by the digital input DI3 regardless of which command channel is switched.
  - By selecting, for example, C214, this action will be triggered by integrated CANopen® with bit 14 regardless of which command channel is switched.
- To a switchable channel by selecting a CDxx bit:
  - By selecting, for example, Cd11, this action will be triggered by: LI12 if the terminals channel is active, C111 if the integrated Modbus channel is active, C211 if the integrated CANopen® channel is active, C311 if the communication card channel is active, C511 if the Ethernet channel is active.

If the active channel is the graphic display terminal, the functions and commands assigned to CDxx switchable internal bits are inactive.

NOTE: Several CDxx does not have equivalent digital inputs and can only be used for switching between 2 networks.

[Ref Freq 1 Config] *Fr1*

Configuration reference frequency 1.

Setting	Code / Value	Description
[Not Configured]	*no*	Not assigned
[AI1]	*AI1*	Analog input AI1 **Factory Setting**
[AI2]...**[AI3]**	*AI2*...*AI3*	Analog input AI2...AI3

Setting	Code / Value	Description
[AI Virtual 1]...**[AI Virtual 3]**	AIV1...AIV3	Virtual analogic input 1...3
[AI4]...**[AI5]**	AI4...AI5	Analog input AI4...AI5 if VW3A3203 I/O extension module has been inserted
[Ref Frequency via DI]	UPdt	Up/Down function is assigned by DIx
[Ref.Freq-Rmt.Term]	LCC	Reference Frequency via remote terminal
[Ref. Freq-Modbus]	Mdb	Reference frequency via Modbus
[Ref. Freq-CANopen]	CAn	Reference frequency via CANopen if a CANopen module has been inserted
[Ref. Freq-Com. Module]	nEt	Reference frequency via fieldbus module if a fieldbus module has been inserted
[Embedded Ethernet]	EtH	Embedded Ethernet
[DI5 PulseInput Assignment]...**[DI6 PulseInput Assignment]**	PI5...PI6	Digital input DI5...DI6 used as pulse input

[Ref.1B channel] Fr1b

Configuration reference frequency 1B.

Identical to **[Ref Freq 1 Config]** Fr1 (see above) with factory setting: **[Not Configured]** no.

[Ref 1B switching] rCb

⚠ WARNING

UNANTICIPATED EQUIPMENT OPERATION

This parameter can cause unintended movements, for example an inversion of the direction of the rotation of the motor, a sudden acceleration or a stop.

- Verify that the setting of this parameter does not cause unintended movements.
- Verify that the setting of this parameter does not result in unsafe conditions.

Failure to follow these instructions can result in death, serious injury, or equipment damage.

Select switching (1 to 1B).

- If the assigned input or bit is at 0, **[Ref Freq 1 Config]** Fr1 is active.
- If the assigned input or bit is at 1, **[Ref.1B channel]** Fr1b is active.

[Ref 1B switching] rCb is forced to **[Ref Freq Channel 1]** Fr1 if **[Control Mode]** CHCF is set to **[Not separ.]** SIM with **[Ref Freq 1 Config]** Fr1 assigned via the terminals (analog inputs, pulse input).

NOTE: Activating this function from an other active command channel will also activate the monitoring of this new channel.

Setting	Code / Value	Description
[Ref Freq Channel 1]	Fr1	Reference channel = channel 1 (for RFC)
[Ref.1B channel]	Fr1b	Reference channel = channel 1b (for RFC)
[DI1]...**[DI6]**	LI1...LI6	Digital input DI1...DI6
[DI11]...**[DI16]**	LI11...LI16	Digital input DI11...DI16 if VW3A3203 I/O extension module has been inserted
[CD00]...**[CD10]**	CD00...CD10	Virtual digital input CMD.0...CMD.10 in **[I/O profile]** IO configuration
[CD11]...**[CD15]**	CD11...CD15	Virtual digital input CMD.11...CMD.15 regardless of configuration
[C101]...**[C110]**	C101...C110	Virtual digital input CMD1.01...CMD1.10 with integrated Modbus Serial in **[I/O profile]** IO configuration
[C111]...**[C115]**	C111...C115	Virtual digital input CMD1.11...CMD1.15 with integrated Modbus Serial regardless of configuration
[C201]...**[C210]**	C201...C210	Virtual digital input CMD2.01...CMD2.10 with CANopen® fieldbus module in **[I/O profile]** IO configuration

Setting	Code / Value	Description
[C211]...[C215]	C211...C215	Virtual digital input CMD2.11...CMD2.15 with CANopen® fieldbus module regardless of configuration
[C301]...[C310]	C301...C310	Virtual digital input CMD3.01...CMD3.10 with a fieldbus module in [I/O profile] IO configuration
[C311]...[C315]	C311...C315	Virtual digital input CMD3.11...CMD3.15 with a fieldbus module regardless of configuration
[C501]...[C510]	C501...C510	Virtual digital input CMD5.01...CMD5.10 with integrated Ethernet in [I/O profile] IO configuration
[C511]...[C515]	C511...C515	Virtual digital input CMD5.11...CMD5.15 with integrated Ethernet regardless of configuration

[Reverse Disable] rIn

Reverse directions disable.

NOTE: Anti-Jam function takes priority over **[Reverse Disable]** rIn function. If an Anti jam function is used, reverse direction is applied despite of the **[Reverse disable]** rIn configuration.

Lock of movement in reverse direction does not apply to direction requests sent by digital inputs.

Reverse direction requests sent by digital inputs are taken into account.

Reverse direction requests sent by the Graphic Display Terminal or sent by the line are not taken into account.

Any reverse speed reference originating from the PID, summing input, and so on, is interpreted as a zero reference (0 Hz).

Setting	Code / Value	Description
[No]	no	No
[Yes]	YES	Yes **Factory Setting**

[Control Mode] CHCF

Mixed mode configuration.

⚠ WARNING

UNANTICIPATED EQUIPMENT OPERATION

Disabling **[I/O profile]** IO resets the drive to the factory settings.

- Verify that restoring the factory settings is compatible with the type of wiring used.

Failure to follow these instructions can result in death, serious injury, or equipment damage.

Setting	Code / Value	Description
[Not separ.]	SIM	Reference and command, not separate **Factory Setting**
[Separate]	SEP	Separate reference and command. This assignment cannot be accessed in [I/O profile] IO
[I/O profile]	IO	I/O profile

[Command Switching] CCS ★

⚠ WARNING

UNANTICIPATED EQUIPMENT OPERATION

This parameter can cause unintended movements, for example an inversion of the direction of the rotation of the motor, a sudden acceleration or a stop.

- Verify that the setting of this parameter does not cause unintended movements.
- Verify that the setting of this parameter does not result in unsafe conditions.

Failure to follow these instructions can result in death, serious injury, or equipment damage.

Control channel switch.

This parameter can be accessed if **[Control Mode]** CHCF is set to **[Separate]** SEP or to **[I/O profile]** IO.

If the assigned input or bit is at 0, channel **[Cmd channel 1]** Cd1 is active.If the assigned input or bit is at 1, channel **[Cmd channel 2]** Cd2 is active.

NOTE: Activating this function from an other active command channel will also activate the monitoring of this new channel.

Setting	Code / Value	Description
[Command channel 1]	Cd1	Command channel = channel 1 (for CCS) **Factory setting**
[Command channel 2]	Cd2	Command channel = channel 2 (for CCS)
[DI1]...**[DI6]**	LI1...LI6	Digital input DI1...DI6
[DI11]...**[DI16]**	LI11...LI16	Digital input DI11...DI16 if VW3A3203 I/O extension module has been inserted
[C101]...**[C110]**	C101...C110	Virtual digital input CMD1.01...CMD1.10 with integrated Modbus Serial in **[I/O profile]** IO configuration
[C111]...**[C115]**	C111...C115	Virtual digital input CMD1.11...CMD1.15 with integrated Modbus Serial regardless of configuration
[C201]...**[C210]**	C201...C210	Virtual digital input CMD2.01...CMD2.10 with CANopen® fieldbus module in **[I/O profile]** IO configuration
[C211]...**[C215]**	C211...C215	Virtual digital input CMD2.11...CMD2.15 with CANopen® fieldbus module regardless of configuration
[C301]...**[C310]**	C301...C310	Virtual digital input CMD3.01...CMD3.10 with a fieldbus module in **[I/O profile]** IO configuration
[C311]...**[C315]**	C311...C315	Virtual digital input CMD3.11...CMD3.15 with a fieldbus module regardless of configuration
[C501]...**[C510]**	C501...C510	Virtual digital input CMD5.01...CMD5.10 with integrated Ethernet in **[I/O profile]** IO configuration
[C511]...**[C515]**	C511...C515	Virtual digital input CMD5.11...CMD5.15 with integrated Ethernet regardless of configuration

[Cmd channel 1] Cd1 ★

Command channel 1 assignment.

This parameter can be accessed if **[Control Mode]** CHCF is set to **[Separate]** SEP or **[I/O profile]** IO.

Setting	Code / Value	Description
[Terminals]	tEr	Terminal block source **Factory Setting**
[Ref.Freq-Rmt.Term]	LCC	Command via Graphic Display Terminal
[Ref. Freq-Modbus]	Mdb	Command via Modbus
[Ref. Freq-CANopen]	CAn	Command via CANopen if a CANopen module has been inserted
[Ref. Freq-Com. Module]	nEt	Command via fieldbus module if a fieldbus module has been inserted

Setting	Code / Value	Description
[Embedded Ethernet]	ETH	Command via Embedded Ethernet

[Cmd channel 2] Cd2 ★

Command channel 2 assignment.

This parameter can be accessed if **[Control Mode]** CHCF is set to **[Separate]** SEP or **[I/O profile]** IO.

Identical to **[Cmd channel 1]** Cd1 with factory setting **[Ref. Freq-Modbus]** Mdb.

[Freq Switch Assign] rFC

⚠ WARNING

UNANTICIPATED EQUIPMENT OPERATION

This parameter can cause unintended movements, for example an inversion of the direction of the rotation of the motor, a sudden acceleration or a stop.

- Verify that the setting of this parameter does not cause unintended movements.
- Verify that the setting of this parameter does not result in unsafe conditions.

Failure to follow these instructions can result in death, serious injury, or equipment damage.

frequency switching assignment.

If the assigned input or bit is at 0, channel **[Ref Freq Channel 1]** Fr1 is active.

If the assigned input or bit is at 1, channel **[Ref Freq Channel 2]** Fr2 is active.

NOTE: Activating this function from an other active command channel will also activate the monitoring of this new channel.

Setting	Code / Value	Description
[Ref Freq Channel 1]	Fr1	Reference channel = channel 1 (for RFC)
[Ref.1B channel]	Fr1b	Reference channel = channel 2 (for RFC)
[DI1]...**[DI6]**	LI1...LI6	Digital input DI1...DI6
[DI11]...**[DI16]**	LI11...LI16	Digital input DI11...DI16 if VW3A3203 I/O extension module has been inserted
[CD00]...**[CD10]**	Cd00...Cd10	Virtual digital input CMD.0...CMD.10 in **[I/O profile]** IO configuration
[CD11]...**[CD15]**	Cd11...Cd15	Virtual digital input CMD.11...CMD.15 regardless of configuration
[C101]...**[C110]**	C101...C110	Virtual digital input CMD1.01...CMD1.10 with integrated Modbus Serial in **[I/O profile]** IO configuration
[C111]...**[C115]**	C111...C115	Virtual digital input CMD1.11...CMD1.15 with integrated Modbus Serial regardless of configuration
[C201]...**[C210]**	C201...C210	Virtual digital input CMD2.01...CMD2.10 with CANopen® fieldbus module in **[I/O profile]** IO configuration
[C211]...**[C215]**	C211...C215	Virtual digital input CMD2.11...CMD2.15 with CANopen® fieldbus module regardless of configuration
[C301]...**[C310]**	C301...C310	Virtual digital input CMD3.01...CMD3.10 with a fieldbus module in **[I/O profile]** IO configuration
[C311]...**[C315]**	C311...C315	Virtual digital input CMD3.11...CMD3.15 with a fieldbus module regardless of configuration
[C501]...**[C510]**	C501...C510	Virtual digital input CMD5.01...CMD5.10 with integrated Ethernet in **[I/O profile]** IO configuration
[C511]...**[C515]**	C511...C515	Virtual digital input CMD5.11...CMD5.15 with integrated Ethernet regardless of configuration

[Ref Freq 2 Config] F r 2

Configuration reference frequency 2.

Setting	Code / Value	Description
[Not Configured]	n o	Not assigned. If **[Control Mode]** C H C F is set to**[Not separ.]** S i M, the command is at the terminals with a zero reference. If **[Control Mode]** C H C F is set to **[Separate]** S E P or **[I/O profile]** i o, the reference is zero. **Factory Setting**
[AI1]...**[AI3]**	A i 1...A i 3	Analog input AI1...AI3
[AI4]...**[AI5]**	A i 4...A i 5	Analog input AI4...AI5 if VW3A3203 I/O extension module has been inserted
[AI Virtual 1]...**[AI Virtual 3]**	A i V 1...A i V 3	Virtual analogic input 1...3
[Ref Frequency via DI]	U P d t	+/– speed command assigned to DIx
[Ref.Freq-Rmt.Term]	L C C	Reference frequency via Graphic Display Terminal
[Ref. Freq-Modbus]	M d b	Reference frequency via Modbus
[Ref. Freq-CANopen]	C A n	Reference frequency via CANopen if a CANopen module has been inserted
[Ref. Freq-Com. Module]	n E t	Reference frequency via fieldbus module if a fieldbus module has been inserted
[Embedded Ethernet]	E t h	Integrated Ethernet
[PulseInput Assignment On DI5]...**[PulseInput Assignment On DI6]**	P i 5...P i 6	Digital input DI5...DI6 used as pulse input

[Copy Ch1-Ch2] C o P

Copy channel 1 reference frequency to channel 2.

⚠ WARNING

UNANTICIPATED EQUIPMENT OPERATION

This parameter can cause unintended movements, for example an inversion of the direction of the rotation of the motor, a sudden acceleration or a stop.

- Verify that the setting of this parameter does not cause unintended movements.
- Verify that the setting of this parameter does not result in unsafe conditions.

Failure to follow these instructions can result in death, serious injury, or equipment damage.

Can be used to copy the current reference and/or the command with switching in order to avoid speed surges, for example.

If **[Control Mode]** C H C F *(see page 244)* is set to **[Not separ.]** S i M or **[Separate]** S E P, copying is possible only from channel 1 to channel 2.

If **[Control Mode]** C H C F is set to **[I/O profile]** i o, copying is possible in both directions.A reference or a command cannot be copied to a channel on the terminals.The reference copied is **[Pre-Ramp Ref Freq]** F r H (before ramp) unless the destination channel reference is set via +/– speed. In this case, the reference copied is **[Output frequency]** r F r (after ramp).

Setting	Code / Value	Description
[No]	n o	No copy **Factory Setting**
[Reference Frequency]	S P	Copy reference

Setting	Code / Value	Description
[Command]	Cd	Copy command
[Cmd + Ref Frequency]	ALL	Copy reference and command

As the Graphic Display Terminal may be selected as the command and/or reference channel, its action modes can be configured.

Comments:
- The Graphic Display Terminal command/reference is only active if the command and/or reference channels from the terminal are active except for BMP with Local/ Remote key (command via the Graphic Display Terminal), which takes priority over these channels. Press Local/ Remote key again to revert control to the selected channel.
- Command and reference via the Graphic Display Terminal are impossible if the latter is connected to more than one drive.
- The preset PID reference functions can only be accessed if [Control Mode] CHCF is set to [Not separ.] SIM or [Separate] SEP.
- The command via the Graphic Display Terminal can be accessed regardless of the [Control Mode] CHCF.

[Forced Local Freq] FLOC

Forced local reference source assignment.

Setting	Code / Value	Description
[Not Configured]	nO	Not assigned (control via the terminals with zero reference) **Factory Setting**
[AI1]...[AI3]	AI1...AI3	Analog input AI1...AI3
[AI4]...[AI5]	AI4...AI5	Analog input AI4...AI5 if VW3A3203 I/O extension module has been inserted
[Ref.Freq-Rmt.Term]	LCC	Graphic Display Terminal
[PulseInput Assignment On DI5]...[PulseInput Assignment On DI6]	PI5...PI6	Digital input DI5...DI6 used as pulse input

[Time-out Forc. Local] FLOt ★

Time for channel confirmation after forced local.

This parameter can be accessed if [Forced Local Assign] FLO is not set to [No] nO.

Setting	Description
0.1...30.0 s	Setting range **Factory setting**: 10.0 s

[Forced Local Assign] FLO

Forced local assignment.

Forced local mode is active when the input is at state 1.

[Forced Local Assign] FLO is forced to [No] nO if [Control Mode] CHCF is set to [I/O profile] IO.

Setting	Code / Value	Description
[Not Assigned]	nO	Not assigned **Factory setting**
[DI1]...[DI6]	LI1...LI6	Digital input DI1...DI6
[DI11]...[DI16]	LI11...LI16	Digital input DI11...DI16 if VW3A3203 I/O extension module has been inserted

Setting	Code / Value	Description
[DI52 (High level)]... **[DI59 (High level)]**	d52H...d59H	Cabinet high level assignment digital inputs **NOTE:** This selection can be accessed on ATV660 and ATV680 equipped with Cabinet IO.

[Reverse Assign] rrS

Reverse assignment.

Setting	Code / Value	Description
[Not Assigned]	nO	Not assigned **Factory setting**
[DI1]...**[DI6]**	LI1...LI6	Digital input DI1...DI6
[DI11]...**[DI16]**	LI11...LI16	Digital input DI11...DI16 if VW3A3203 I/O extension module has been inserted
[CD00]...**[CD10]**	CD00...CD10	Virtual digital input CMD.0...CMD.10 in **[I/O profile]** IO configuration
[CD11]...**[CD15]**	CD11...CD15	Virtual digital input CMD.11...CMD.15 regardless of configuration
[C101]...**[C110]**	C101...C110	Virtual digital input CMD1.01...CMD1.10 with integrated Modbus Serial in **[I/O profile]** IO configuration
[C111]...**[C115]**	C111...C115	Virtual digital input CMD1.11...CMD1.15 with integrated Modbus Serial regardless of configuration
[C201]...**[C210]**	C201...C210	Virtual digital input CMD2.01...CMD2.10 with CANopen® fieldbus module in **[I/O profile]** IO configuration
[C211]...**[C215]**	C211...C215	Virtual digital input CMD2.11...CMD2.15 with CANopen® fieldbus module regardless of configuration
[C301]...**[C310]**	C301...C310	Virtual digital input CMD3.01...CMD3.10 with a fieldbus module in **[I/O profile]** IO configuration
[C311]...**[C315]**	C311...C315	Virtual digital input CMD3.11...CMD3.15 with a fieldbus module regardless of configuration
[C501]...**[C510]**	C501...C510	Virtual digital input CMD5.01...CMD5.10 with integrated Ethernet in **[I/O profile]** IO configuration
[C511]...**[C515]**	C511...C515	Virtual digital input CMD5.11...CMD5.15 with integrated Ethernet regardless of configuration

[2/3-wire control] tCC

2-wire or 3-wire control.

⚠ WARNING

UNANTICIPATED EQUIPMENT OPERATION

If this parameter is changed, the parameters **[Reverse Assign]** rrS and **[2-wire type]** tCt and the assignments of the digital inputs are reset to the factory setting.

Verify that this change is compatible with the type of wiring used.

Failure to follow these instructions can result in death, serious injury, or equipment damage.

Setting	Code / Value	Description
[2-Wire Control]	2C	**2-wire control (level commands):** This is the input state (0 or 1) or edge (0 to 1 or 1 to 0), which controls running or stopping. Example of **source** wiring: 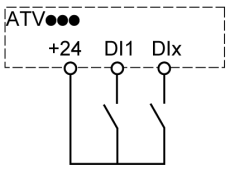 **DI1** Forward **DIx** Reverse **Factory setting**
[3-Wire Control]	3C	**3-wire control (pulse commands) [3 wire]:** A **forward** or **reverse** pulse is sufficient to command starting, a **stop** pulse is sufficient to command stopping. Example of **source** wiring: 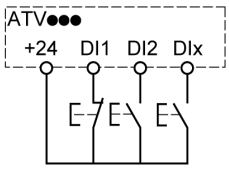 **DI1** Stop **DI2** Forward **DIx** Reverse

[2-wire type] tCt ★

Type of 2-wire control.

This parameter can be accessed if **[2/3-wire control]** tCC is set to **[2-Wire Control]** 2C.

⚠ WARNING

UNANTICIPATED EQUIPMENT OPERATION

Verify that the parameter setting is compatible with the type of wiring used.

Failure to follow these instructions can result in death, serious injury, or equipment damage.

Setting	Code / Value	Description
[Level]	LEL	State 0 or 1 is taken into account for run (1) or stop (0)
[Transition]	trn	A change of state (transition or edge) is necessary to initiate operation in order to avoid accidental restarts after a break in the supply mains **Factory setting**
[Level With Fwd Priority]	PFo	State 0 or 1 is taken into account for run or stop, but the “forward” input takes priority over the “reverse” input

[Stop Key Enable] PSt

STOP/RESET key enable.

Setting this function to no disables the STOP key of the Display Terminal if the setting of the parameter **[Command Channel]** CMdC is not **[Ref. Freq-Rmt.Term]** LCC.

⚠ WARNING

LOSS OF CONTROL

Only set this parameter to no if you have implemented appropriate alternative stop functions.

Failure to follow these instructions can result in death, serious injury, or equipment damage.

If 2-wire control by level is active (parameter **[2/3-Wire Control]** tCC set to **[2-Wire Control]** 2C and parameter **[2-wire type]** tCt set to **[Level]** LEL or **[Level With Fwd Priority]** PFo) and the parameter PSt set to **[Stop Key Priority All]** is set to **[Stop Key Priority All]** ALL, the motor starts if the STOP/RESET key of the Display Terminal is pressed while a run command is active.

⚠ WARNING

UNANTICIPATED EQUIPMENT OPERATION

Only set the parameter **[Stop Key Enable]** PSt to **[Stop Key Priority All]** ALL in 2-wire control by level after having verified that this setting cannot result in unsafe conditions.

Failure to follow these instructions can result in death, serious injury, or equipment damage.

Irrespective of the configuration of **[Stop Key Enable]** PSt, if the active command channel is the Graphic Display Terminal, the STOP/RESET key performs:

- in run, a stop according to the **[Type of stop]** Stt,
- in “Operating State Fault", a fault reset command.

The following table gives the behavior of the function when the Graphic Display Terminal is not the active command channel:

Setting	Code / Value	Description
[Stop Key No Priority]	no	Disables the STOP/RESET key on the Graphic Display Terminal.
[Stop Key Priority]	YES	Gives priority to the STOP/RESET key on the Graphic Display Terminal. Only the stop function is enabled. The stop is performed in freewheel. **Factory Setting**
[Stop Key Priority All]	ALL	Gives priority to the STOP/RESET key on the Graphic Display Terminal. The fault reset function and the stop function are enabled. The stop is performed depending on **[Type of Stop]** Stt setting value.

[HMI cmd.] bMP

HMI command.

Setting	Code / Value	Description
[Stop]	StoP	Stops the drive (although the controlled direction of operation and reference of the previous channel are copied (to be taken into account on the next RUN command))
[Bumpless]	buMP	Does not stop the drive (the controlled direction of operation and the reference of the previous channel are copied)
[Disabled]	diS	Disabled **Factory Setting**

Section 8.7
[Pump functions] - [Booster control]

Introduction

The aim of the booster control function is to maintain the desired pressure or flow at the outlet of the pumps according to the demand by:

- Managing the velocity of the variable speed pump connected to the drive.
- Staging/De-staging the auxiliary fixed speed pumps.

This menu can be accessed if **[Application Selection]** APPt is set to **[Pump Booster Control]** boo St.

What Is in This Section?

This section contains the following topics:

Topic	Page
[System Architecture] nPS - Menu	253
[MultiDrive Config] nPV C - Menu	264
[Pumps configuration] P u nP - Menu	267
[System Architecture] nPS - Menu	270
[Booster control] bSC - Menu	271
[Stage/Destage condition] Sd C n - Menu	274
[Stage/Destage method] Sd nn - Menu	278
[Booster control] bSC - Menu	281

[System Architecture] ΠPq - Menu

Access

[Complete settings] ➡ **[Pump functions]** ➡ **[Booster control]** ➡ **[System architecture]**

About This Menu

This menu is used to define the equipment architecture.

The architecture is chosen by setting **[Pump System Archit]** ΠPSA to:

- **[Single Drive]** unduL : one variable speed pump and up to five fixed speed pumps
- **[Multi Drives]** nVSd: up to six variable speed pumps
- **[Multi Masters]** nVSdr : one master variable speed pump and up to five redundant masters or slaves.

In single drive architecture, the total number of pumps is set with **[Nb Of Pumps]** ΠPPn:

- With lead pump alternation, using interlocked switching relays for all pumps to connect them on mains or on the drive.
- Without lead pump alternation, using digital outputs to command the auxiliary pumps (with soft starters for example). The lead pump is always connected to the drive.
  In multiple drives architecture, the number of pumps is set with **[Nb of Devices]** ΠPGn. Lead pump alternation is not possible in this case.

MultiDrive Link Mechanism

Introduction:

MultiDrive Link function allows direct communication between a drives group.

This communication is done through an Ethernet link between each drives.

Some drive functions can be configured with the MultiDrive Link.

A VW3A3721 Ethernet module must be installed on the ATV600 drive to use MultiDrive Link.

Topology

MultiDrive Link function is an Ethernet based protocol.

It can be used in following topologies:

- Daisy chain
- Star
- Redundant ring with RSTP

More information about topologies is available in ATV600 Ethernet Option Manual.

MultiDrive Link Properties

MultiDrive Link Group:

A MultiDrive Link group can be composed of up to 6 devices.

Each device can be configured as Master or Slave, but only 1 active master must be present at same time in a MultiDrive Link group.

Each drive, must be identified with a unique ID from 1 to the maximum number of devices in the group.

Data Exchange Principle:

Each drive of the MultiDrive Link group sends data to all the drives of its group.

These data are sorted in data groups which are specifics for each application used in combination.

These data are sent using UDP frames with multicast IP addressing.

Network Configuration

The MultiDrive Link function uses the following network resources:

- IP address: 239.192.152.143
- UDP ports: 6700 and 6732
- Non routed networks

If the MultiDrive Link function is used over an Ethernet network, it is mandatory to take into account theses resources for its configuration.

Only one MultiDrive Link group can be used on a same Ethernet network.

Drive Configuration

Each drive used on a MultiDrive Link group must have an IP address.

This IP address can be set manually or assigned by a DHCP or BOOTP server.

MultiDrive Link Communication Monitoring

A permanent monitoring of the communication is performed by each drive of the MultiDrive Link Group to avoid:

- Execution of the same command
- Corruption of data on the MultiDrive Link group

Duplicate Slave ID:

The following table shows how the function reacts in case of duplicate slave ID detection:

If a Duplicate Slave ID is…	Then…
Detected at the same time in the MultiDrive Link group	It is not possible to identify the valid drive. In this case, both drives: ● are considered invalid ● are unavailable on the MultiDrive Link group ● don't send data on the MultiDrive Link group

Pump Cycling Mode

This functionality allows changing the start order of all available pumps in order to manage their wear. There are several ways to perform the pump cycling strategy by setting **[Pump Cycling Mode]** *PPC*:

- Cycling based on pump order:
  - **[FIFO]** *FIFO* mode: pumps are started and stopped in ascending order
  - **[LIFO]** *LIFO* mode: pumps are started in ascending order while they are stopped in descending order
- Cycling based on running time:
  - **[Runtime]** *rtIME*: the available pump with the lowest running time is started first and the running pump with the highest running time is stopped first.
  - **[Runtime&LIFO]** *rtLF*: cycling based on a combination of running time and LIFO mode. The available pump with the lowest running time is started first and the running pump started at latest is stopped first.

  NOTE: This choice is not available if **[Pump System Archit]** *PPSA* is set to **[Multi Drives]** *nVSd*.

Lead Pump Alternation

The lead pump alternation function allows permuting the available pumps in order that each pump can become the lead pump (variable speed pump) instead of an auxiliary pump (fixed speed pump).

The lead pump is the first pump to be started and the last pump to be stopped. It is always associated to the variable speed drive.

The function can be activated by setting **[Lead Pump Alternation]** *PPLA*:

- **[No]** *no*: no lead pump alternation, the pump 1 is always the lead pump. The pump cycling is applied only on auxiliary pumps.
- **[Standard]** *YES*: the lead pump is permuted between all available pumps at each pump operation start.
- **[Redundancy]** *rEd*: lead pump alternation is effective only if the pump 1 is not available.

When lead pump alternation is activated, catch on fly function should be configured to reduce over current when a pump is started as the lead pump while it was running as auxiliary pump before. It is also possible to set **[Pump Ready Delay]** *PPid* to delay the availability of an auxiliary pump for a new start after it has been stopped.

Automatic Period Cycling

This function is used to balance the duty sharing of all the pumps of the MultiPump architecture.

When using this function, it is recommended to activate the Catch On Fly function.Depending of the value of **[Pump Cycling Mode]** *ΠPPC*, this function has different behavior:

- If **[Pump Cycling Mode]** *ΠPPC* is set to **[Runtime]** *rt ıΠE*, the pumps alternate according to the differential operating time between the next to stage and next to destage pumps.
- If **[Pump Cycling Mode]** *ΠPPC* is set to **[FIFO]** *F ıFo*, the pumps alternate periodically with the time defined on **[Pump Auto Cycling]** *ΠPCP*. However the time period resets in following cases:
  - At each destage
  - On lead pump stage
  - In architectures with 1 variable speed pumps and direct on line pumps, on first auxiliary pump stage whatever the value of **[Lead Pump Alternation]** *ΠPLA*.

NOTE: This function is not active when **[Pump Cycling Mode]** *ΠPPC* is set to **[LIFO]** *L ıFo* or **[Runtime&LIFO]** *rtLF*.

Display Parameters

A set of parameters to display the system is available in **[Display]** *Πon* - **[Pump parameters]** *PPr* - **[Multipump System]** *ΠPS* -:

- The state of the system **[MultiPump State]** *ΠPS*.
- The quantity of pumps available **[Available Pumps]** *ΠPAn* and the quantity of pump already staged **[Nb of Staged Pumps]** *ΠPSn*.
- The number of the pump selected to be the lead pump **[Lead Pump]** *PL id*.
- The number of the next pump to be staged **[Next Staged Pump]** *Pnt S* and de-staged **[Next Destaged Pump]** *Pntd*.
- For each pump (pump 1 in the example):
  - The state **[Pump 1 State]** *P 1S*
  - The type **[Pump 1 Type]** *P 1t*
  - The cumulated run time **[Pump 1 Runtime]** *P 1ot*
  - The cumulated number of starts **[Pump 1 Nb Starts]** *P 1nS*

Example of Architecture Without Lead Pump Alternation and Two Fixed Speed Pumps

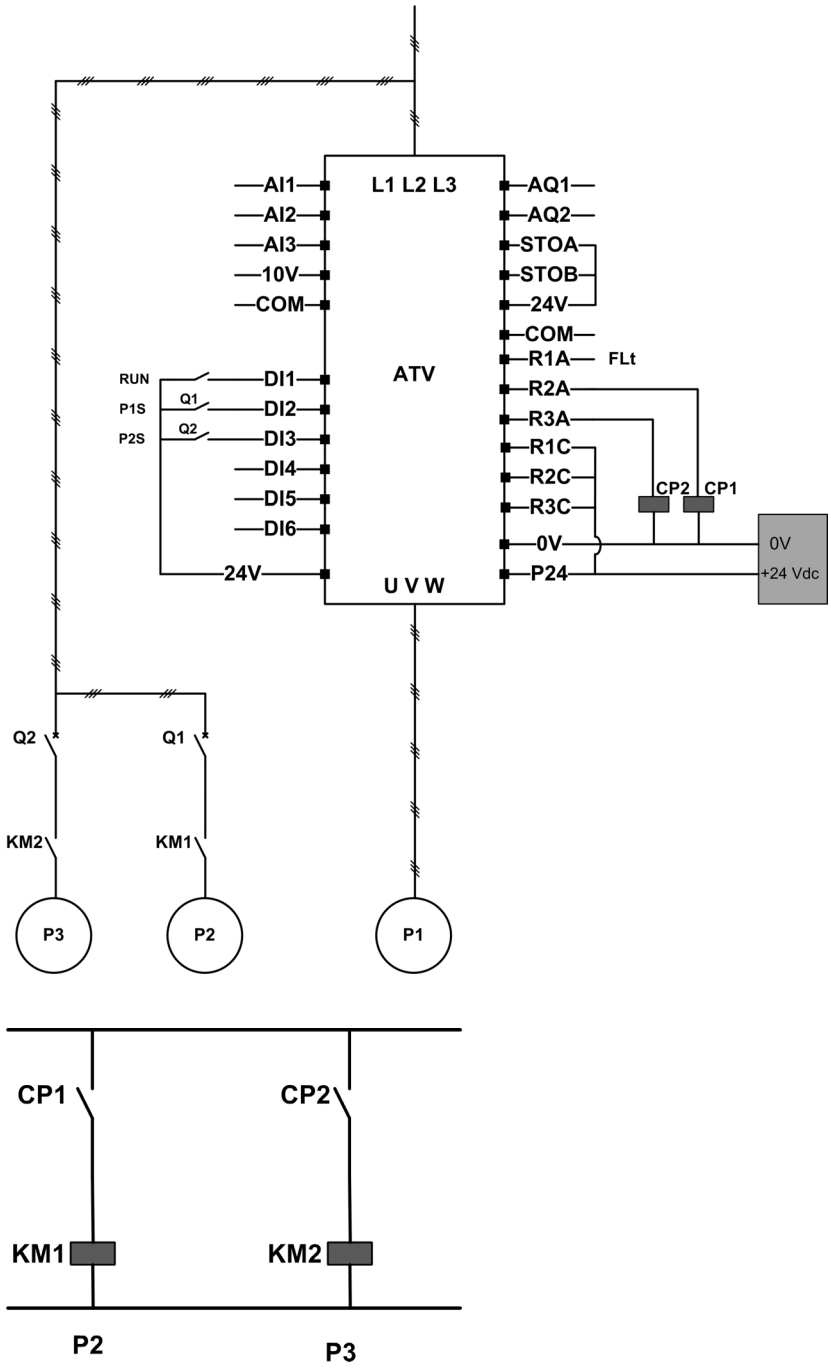

Pump 2 and pump 3 are controlled by relay outputs R2 and R3.

The state of each pump is provided to the drive via digital inputs DI2 and DI3:

- 1 = the pump is ready to operate.
- 0 = the pump is not available.

KM1 is switched ON when CP1 is activated. CP1 is controlled via the relay output R2.

KM2 is switched ON when CP2 is activated. CP2 is controlled via the relay output R3.

Q1 and Q2 must be switched ON to have both pump 2 and pump 3 ready to operate.

Example of Architecture with Lead Pump Alternation on Three Pumps

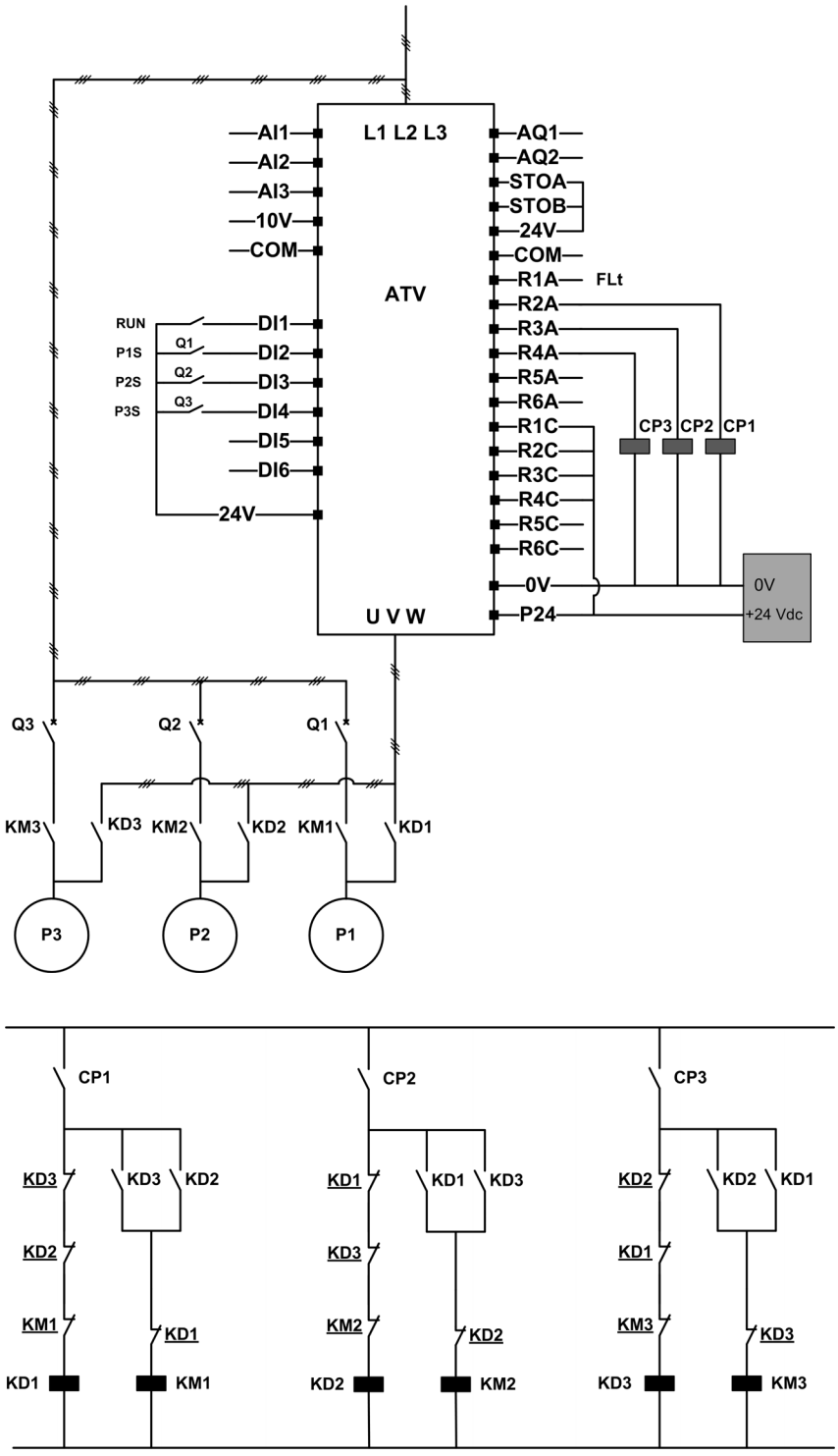

Each pump is controlled by a relay output:

- Pump 1 control via relay output R2.
- Pump 2 control via relay output R3.
- Pump 3 control via relay output R4.

The state of each pump is provided to the drive via digital inputs DI2, DI3, and DI4:

- 1 = the pump is ready to operate.
- 0 = the pump is not available.

If the relay output R2 is the first activated, the pump 1 becomes the lead pump. CP1 is switched ON via relay output R2, KD1 is switched ON and the pump 1 is connected to the drive.

The other pumps cannot be connected to the drive thanks to KD1 (switched OFF) which prevent KD2 and KD3 to be activated when CP2 and CP3 are switched ON. The other pumps become auxiliary pumps and they are connected to the supply mains trough KM2 and KM3 which are activated when, respectively, CP2 and CP3 are switched ON, that is, when R3 and R4 are activated.

When relay output R3 is the first activated, the pump 2 becomes the lead pump. The other pumps become auxiliary pumps which are connected to the supply mains via KM1 and KM3.

When relay output R4 is the first activated, the pump 3 becomes the lead pump. The other pumps become auxiliary pumps which are connected to the supply mains via KM1 and KM2.

Q1, Q2, and Q3 must be switched ON to have all pumps ready to operate.

To change the lead pump, it is necessary to deactivate all relay outputs which means that all pumps must be already stopped. It is then possible to decide which relay output to be activated first and so defining the new lead pump.

Example of Architecture with Lead Pump Alternation on Three Pumps and Auto/Manu Switch

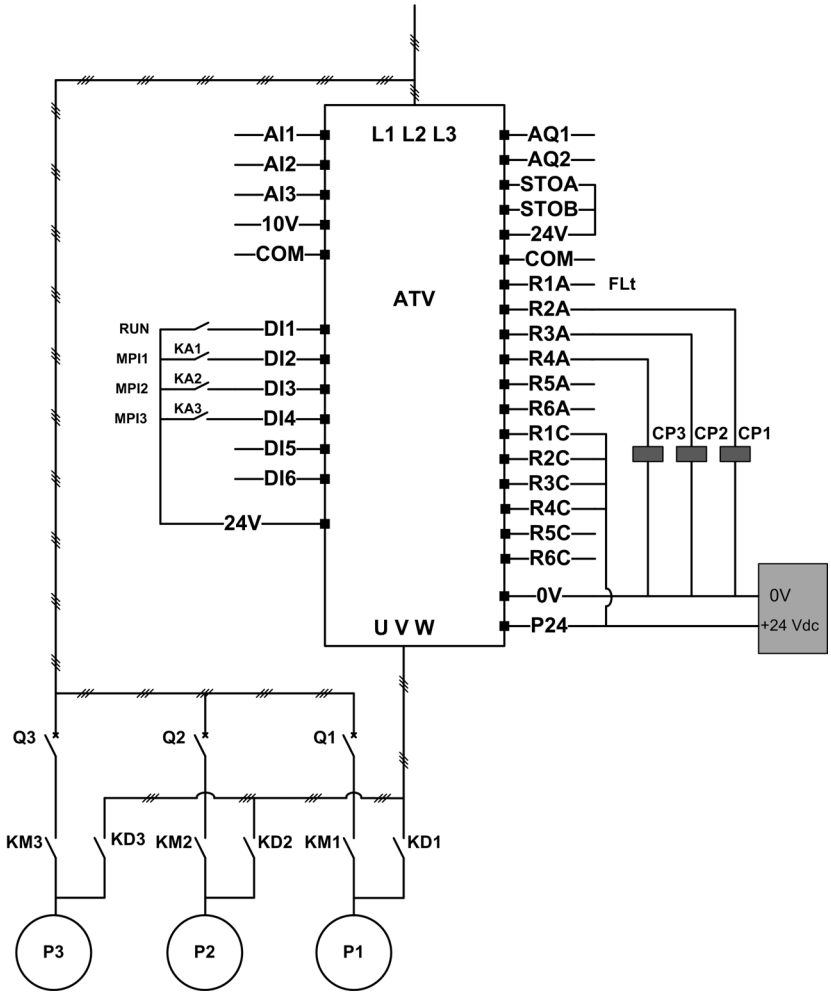

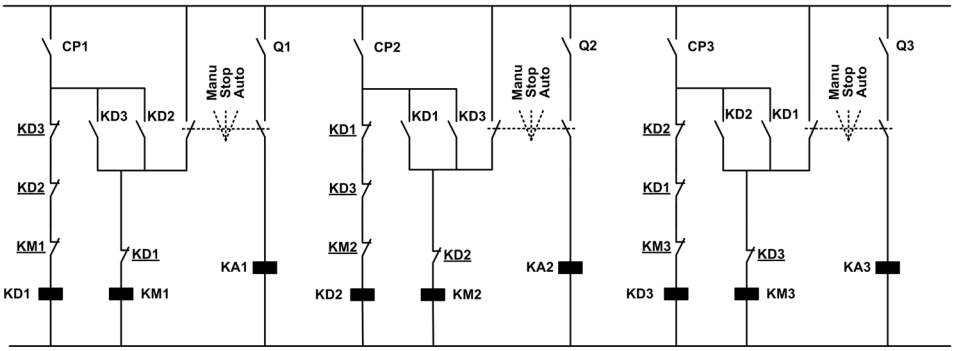

Each pump is controlled by a relay output:
- Pump 1 control via relay output R2.
- Pump 2 control via relay output R3.
- Pump 3 control via relay output R4.

The state of each pump is provided to the drive via digital inputs DI2, DI3, and DI4:
- 1 = the pump is ready to operate.
- 0 = the pump is not available (stopped or in manual mode).

In automatic mode: Same principle as previous architecture with lead pump alternation.

In manual mode: All pumps are connected to the supply mains through KM1, KM2, and KM3.

Example of Architecture with Three Pumps and MultiDrive Link

Each pump is controlled by an ATV600 drive.

The drives are connected together through the MultiDrive link using an Ethernet option module.

Each drive has its own RUN command:
- This command allows the pump to operate.
- On Master drive, this command allows execution of MultiPump functions like Booster and Level Control.

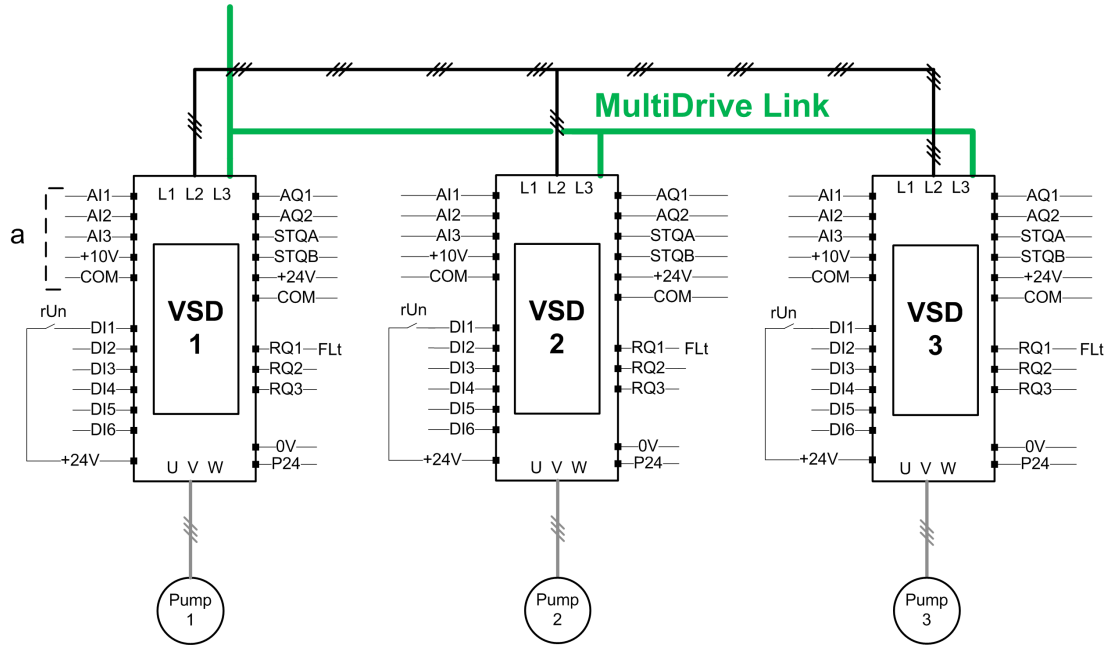

a Sensors connected to the master.

Example of Architecture with Three pumps, MultiDrive Link and Auto/Manu Switch

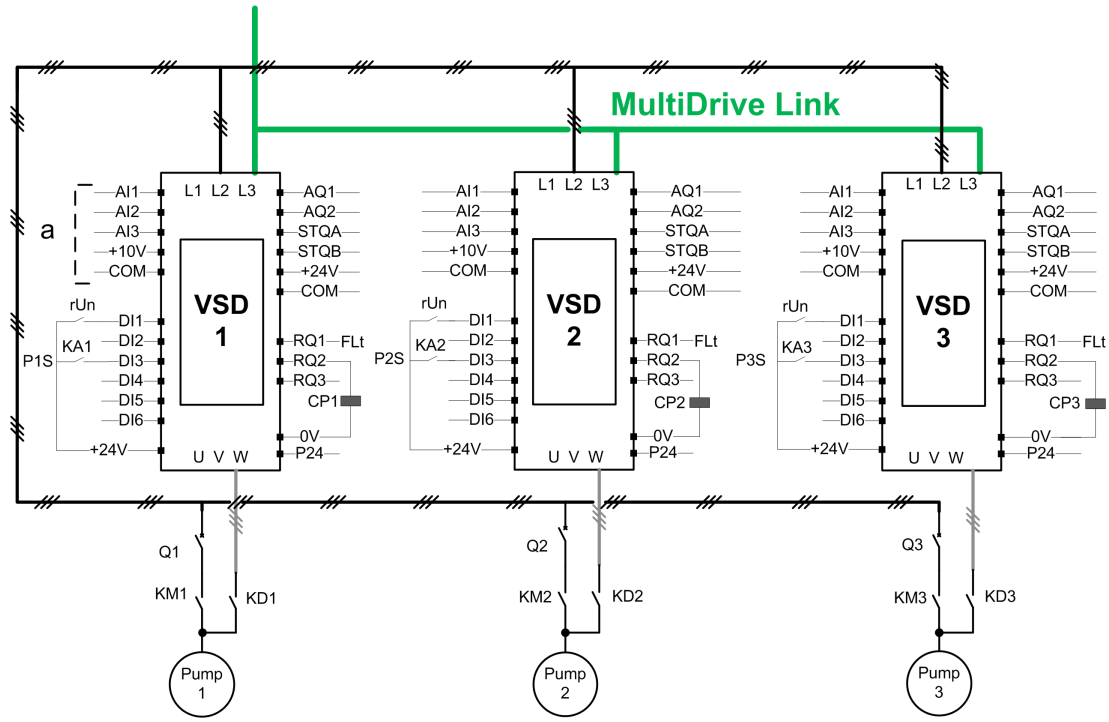

a Sensors connected to the master.

Switching board

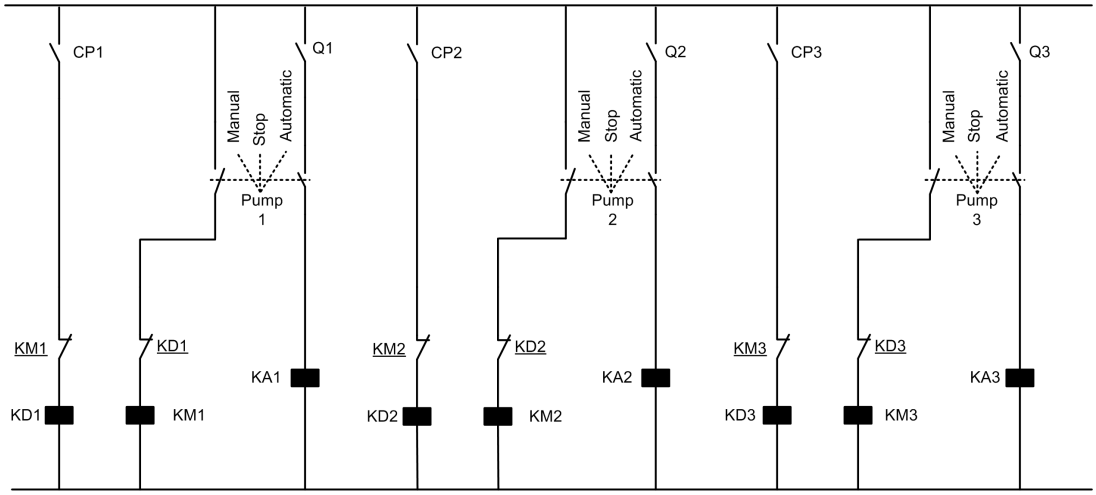

The drives are connected together through the MultiDrive link using a VW3A3721 Ethernet option module.

Each drive has its own RUN command:

- This command allows the pump to operate.
- On Master drive, this command allows execution of MultiPump functions like Booster and Level Control.

The state of each pump is provided to the drive using digital input (DI3 in example).

If this input is set to:

- 1 = the pump is ready to operate in Automatic mode.
- 0 = the pump is not available (Stopped or in Manual mode).

In Automatic mode, the pump is connected and controlled using the ATV600 drive.

In Manual mode, the pump is disconnected from the ATV600 drive and connected to the supply mains.

In Stop mode, the pump is disconnected from both supply mains and ATV600 drive.

Example of Architecture with Three pumps, MultiDrive Link and Service Continuity

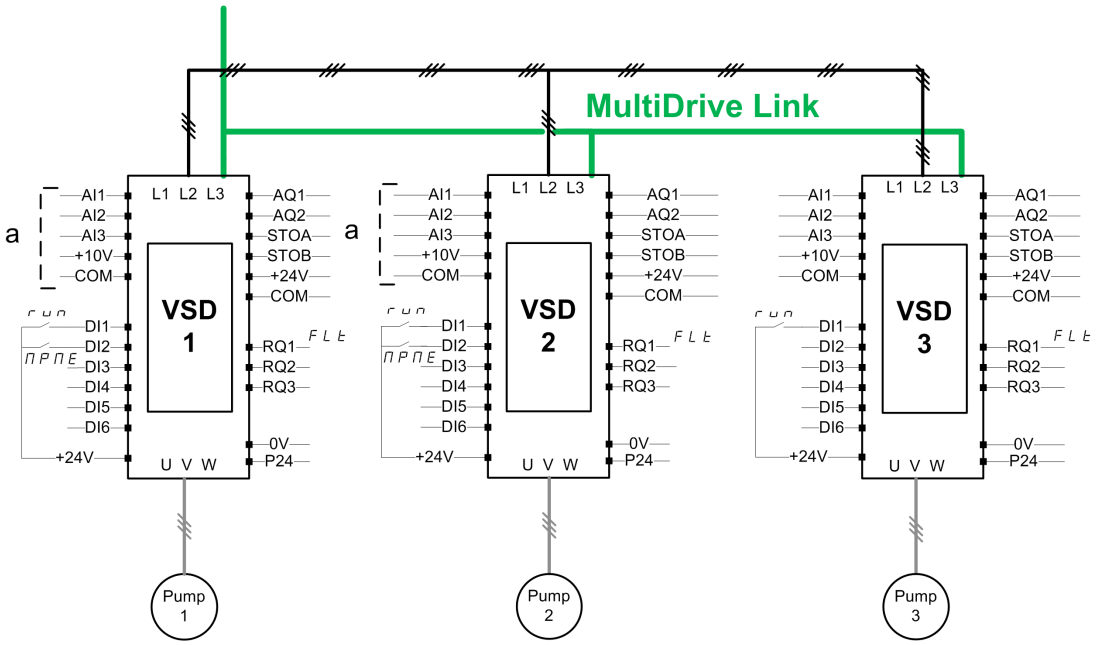

NOTE: Pump 1 = Master, Pump 2: Master or slave, Pump 3: Slave

The drives are connected together through the MultiDrive Link using a VW3A3721 Ethernet option module.

Each drive has its own RUN command:

- This command allows the pump to operate.
- On Master drive, this command allows execution of MultiPump functions like Booster and Level Control.

Each drive of the architecture with **[M/P Device Role]** *ΠPdt* set as **[Master or Slave]** *ΠAS t2* can acts as Master.

Master Selection

To allow selection of which drive will acts as Master, the parameter **[Master Enable Assign]** *ΠPΠE* can be configured.

When the input is set to 1, the drive acts as a Master, otherwise, it acts as Slave.

Sensors Wiring

The sensors needed for the application control must be wired on all the drives that can acts as Masters.

Master Election

A drive can be elected as Master if:

- The RUN command is present
- And the drive is not in error state (except for system errors)
- And **[Master Enable Assign]** *ΠPΠE* input is active or not configured.

There is no additional condition on the primary master.

To switch on a secondary master, the primary master must be not available.

A not elected Master acts as a Slave. In this case, Application Control is not executed on it and the error reaction is same as a Slave in architectures without Service Continuity.

At power on, a Master takes the control of the application after the **[PwrOn Master Delay]** *ΠPPd* delay if the conditions described above are valid.

When the Master activation conditions are valid, the drive is elected as master of the application after the **[Master Act Delay]** *ΠPΠd* delay. If the **[Master Enable Assign]** *ΠPΠE* is not configured in the architecture, it is recommended to set different delays on the possible masters of the application according to their priority.After election of the Master, the drive activates the output configured on **[Master Active Assign]** *ΠPΠA* parameter.

NOTE: Even if the output is active, it does not mean that the master is active. The MultiDrive Link mechanism will elect one master among all the drives in the architecture and the active master can be identified by **[Active Master ID]** *ΠΠ id*.

The status of application is kept when switching from a master to another one.

Following applicative status are taken into account:
- **Sleep/Wake-up:** if the application is woken up
- **Priming Pump:** if the application is primed.
  NOTE: In this case the priming pump control have to be wired on each possible masters of the application.
- **Pipe Fill:** if the pipe is filled.

Example: if the master has finished its priming phase, the second one will not restart the priming sequence when it will take the control of the application.

Warnings and Errors Handling

MultiPump Capacity Warning

If the available capacity of the system is exceeded:
- **[MultiPump Capacity Warn]** *ΠPCA* warning is active if the number of pumps to be started is higher than the number of available pumps.
  NOTE: If the number of available pump is equal to 0, the warning is active.

Lead Pump Error/Warning

NOTE: The following handling is done if **[Pump System Architecture]** *ΠPSA* is set to **[Single Drive]** *Vndol*.

If the selected lead pump is not available:
- A **[Lead Pump Warn]** *ΠPLA* warning is active if the lead pump becomes not available while in run or if there is no lead pump available at run command.
- A **[Lead Pump Error]** *ΠPLF* error is active if the lead pump becomes not available while in run.If configured, the delay **[Pump Ready Delay]** *ΠP id* is applied on the error triggering if there is no lead pump available at run command.
  This error is handled whatever the active command channel if booster control or level control function is configured.

The drive response to a **[Lead Pump Error]** *ΠPLF* is set with **[MultiPump ErrorResp]** *ΠPFb* parameter.

MultiPump Device Error/Warning

NOTE: The following handling is done if **[Pump System Architecture]** *ΠPSA* is set to **[Multi Drives]** *nVSd* or **[Multi Masters]** *nVSdr*.

A device is considered not available by another when no data is received, through MultiDrive Link, for a time longer than **[MDL Comm Timeout]** *ΠLto* delay.
- On Master device, the **[M/P Device Warn]***ΠPdA* warning is active if one or more Slave devices is not available or not ready.
- On Slave device, the **[M/P Device Warn]***ΠPdA* warning is active if the Master device is not available.
- A **[M/P Device Error]** *ΠPdF* error is active if **[M/P Device Warn]***ΠPdA* is active while system is running during more than twice **[Master Act Delay]** *ΠPΠd* delay and a run command is set.

The **[M/P Device Error]** *ΠPdF* error can be active only on a device which acts as a Slave.

The drive response to a **[M/P Device Error]** *ΠPdF* is set with **[M/P Device ErrorResp]** *ΠPdb* parameter.

MultiDrive Link Error

NOTE: The following handling is done if **[Pump System Architecture]** *ΠPSA* is set to **[Multi Drives]** *nVSd*.

- A **[MultiDrive Link Error]** *ΠdLF* error is active if the MultiDrive Link architecture is not consistent (several Masters, several Slaves with same ID) at run command.

The drive response to a **[MultiDrive Link Error]** *ΠdLF* is set with **[MultiDrive ErrorResp]** *ΠdLb* parameter.

Application functions and Device Role

Depending of the device role selected in case of Multipumps Architecture, some functions can become not configurable.

The following table shows the list of functions that can be activated depending of the **[M/P Device Role]** *MPdt* selection. When a function is described as not available, this function is not displayed on Display Terminal.

Function	[M/P Device Role] *MPdt*	
	[Master] *MAST* or [Master Only] *MAST1* or [Master or Slave] *MAST2*	[Slave] *SLAVE*
[Anti-jam monit] *JAM-*	Yes	Yes
[Priming pump ctrl] *PPC-*	Yes	Yes (1)
[Pipe fill] *PF1-*	Yes	Not available
[High flow monitoring] *HFP-*	Yes	Not available
[Flow limitation] *FLM-*	Yes	Not available
[Outlet pressure monitoring] *oPP-*	Yes	Not available
[Inlet pressure monitoring] *iPP-*	Yes	Not available
[PID controller] *Pid-*	Yes	Not available
[Sleep/Wakeup] *SPW-*	Yes	Not available
[Friction loss comp] *FLC-*	Yes	Not available
[Jockey pump] *JKP-*	Yes	Not available
[Feedback monitoring] *FKM-*	Yes	Not available
1 Priming pump is used, when **[M/P Device Role]** *MPdt* is set to **[Slave]** *SLAVE*, only if the pump is controlled locally (for example during Anti-jam execution). In normal operation, the master manages the priming pump for the system.		

[Pump System Archi] *MPSA*

Pump system architecture selection.

Setting	Code / Value	Description
[Mono-Pump]	*no*	Multi-pump control deactivated **Factory setting**
[Single Drive]	*Vndol*	Single drive with or without auxiliary pumps
[Multi Drives]	*nVSd*	Multiple drives
[Multi Masters]	*nVSdr*	Multiple Drives with Master redundancy

[Nb Of Pumps] *MPPn* ★

Number of pumps.

This parameter can be accessed if **[Pump System Archi]** *MPSA* is set to **[Single Drive]** *Vndol*.

Setting	Description
1...6	Setting range **Factory setting**: 1

[MultiDrive Config] nPVC - Menu

Access

[Complete settings] ➡ **[Pump functions]** ➡ **[Booster control]** ➡ **[System architecture]** ➡ **[Multidrive Config]**

About This Menu

This menu can be accessed if **[Pump System Archit]** nPSA is set to **[Multi Drives]** nVSd or **[Multi Masters]** nVSdr.

[M/P Device Role] nPdt ★

Multipump master or slave selection

Setting	Code / Value	Description
[Slave]	SLAVE	Drive is managed by the Master drive of Multipump architecture **Factory setting**
[Master]	nASt	Drive manages the other drives of Multipump architecture **NOTE:** This selection can be accessed if **[Pump System Archi]** nPSA is set to **[Multi Drives]** nVSd.
[Master Only]	nASt 1	Drive is the primary master of the Multipump architecture with master redundancy. **NOTE:** This selection can be accessed if **[Pump System Archi]** nPSA is set to **[Multi Masters]** nVSdr.
[Master or Slave]	nASt2	Drive acts as a slave as long as the drive with nASt 1 selection is available. It acts as master when the drive with nASt 1 selection is not available. **NOTE:** This selection can be accessed if **[Pump System Archi]** nPSA is set to **[Multi Masters]** nVSdr.

[Nb of Devices] nPGn ★

Number of Multipump devices

This parameter can be accessed if **[M/P Device Role]** nPdt is set to **[Master]** nASt, **[Master Only]** nASt 1, or **[Master or Slave]** nASt2

Setting	Description
1...6	Setting range **Factory setting**: 1

[M/P Device ID] nGid ★

Multipump device ID selection

The ID must be unique and selected between 1 and **[Nb of Devices]** nPGn on each drives of the MultiDrive Link group.

NOTE: This parameter is reset to **[No]** no if one of the following parameter value is changed:**[M/P Device Role]** nPdt, **[Nb of Devices]** nPGn, **[MDL Pairing Code]** ndPC.

Setting	Description
[No] no to 6	Setting range **Factory setting**: **[No]** no

[MDL Pairing Code] MdPC ★

MultiDrive Link pairing code.

This parameter is used to manage several MultiDrive Link architectures on a same Ethernet network. The pairing code have to be the same on each drives of a MultiDrive Link architecture.

This parameter can be accessed if **[Access Level]** LAC is set to **[Expert]** EPr.

Setting	Description
0...255	Setting range **Factory setting**: 0

[Master Enable Assign] MPME

Multi-pump master enable assignment.

This parameter can be accessed if **[M/P Device Role]** MPdt is set to **[Master or Slave]** MAS2.

This input is used to activate a drive of a MultiDrive Link group as a master.

Setting	Code / Value	Description
[Not Assigned]	no	Not assigned **Factory setting**
[DI1]...**[DI6]**	LI1...LI6	Digital input DI1...DI6
[DI11]...**[DI16]**	LI11...LI16	Digital input DI11...DI16 if VW3A3203 I/O extension module has been inserted
[CD00]...**[CD10]**	Cd00...Cd10	Virtual digital input CMD.0...CMD.10 in **[I/O profile]** IO configuration
[CD11]...**[CD15]**	Cd11...Cd15	Virtual digital input CMD.11...CMD.15 regardless of configuration
[C101]...**[C110]**	C101...C110	Virtual digital input CMD1.01...CMD1.10 with integrated Modbus Serial in **[I/O profile]** IO configuration
[C111]...**[C115]**	C111...C115	Virtual digital input CMD1.11...CMD1.15 with integrated Modbus Serial regardless of configuration
[C201]...**[C210]**	C201...C210	Virtual digital input CMD2.01...CMD2.10 with CANopen® fieldbus module in **[I/O profile]** IO configuration
[C211]...**[C215]**	C211...C215	Virtual digital input CMD2.11...CMD2.15 with CANopen® fieldbus module regardless of configuration
[C301]...**[C310]**	C301...C310	Virtual digital input CMD3.01...CMD3.10 with a fieldbus module in **[I/O profile]** IO configuration
[C311]...**[C315]**	C311...C315	Virtual digital input CMD3.11...CMD3.15 with a fieldbus module regardless of configuration
[C501]...**[C510]**	C501...C510	Virtual digital input CMD5.01...CMD5.10 with integrated Ethernet in **[I/O profile]** IO configuration
[C511]...**[C515]**	C511...C515	Virtual digital input CMD5.11...CMD5.15 with integrated Ethernet regardless of configuration

[Master Active Assign] MPMA

Multi-pump master activated assignment.

This parameter can be accessed if **[M/P Device Role]** MPdt is set to **[Master Only]** MAS1 or **[Master or Slave]** MAS2.

This output is used to indicate if the drive acts as a master.

Setting	Code / Value	Description
[No]	no	Not assigned **Factory setting**
[R2]...**[R3]**	r2...r3	Relay output R2...R3
[R4]...**[R6]**	r4...r6	Relay output R4...R6 if VW3A3204 relay output option module has been inserted
[DQ11 Digital Output]...**[DQ12 Digital Output]**	do11...do12	Digital output DQ11...DQ12 if VW3A3203 I/O extension module has been inserted

Setting	Code / Value	Description
[R61]…**[R66]**	r61…r66	Relay R61 …R66 **NOTE:** This selection can be accessed on ATV660 and ATV680 equipped with Cabinet IO

[Master Act Delay] MPMd

Multi-pump master activation delay.

This parameter can be accessed if **[M/P Device Role]** MPdt is set to **[Slave]** SLAVE or **[Master or Slave]** MAST2.

This parameter allows to delay the master activation and acts also as a timer before triggering a **[M/P Device Error]** MPdF if no master is available.

Setting	Description
0.0...99.9 s	Setting range **Factory setting**: 0.0 s

[PwrOn Master Delay] MPPd

Multi-pump power-on master delay.

This parameter can be accessed if **[M/P Device Role]** MPdt is set to **[Master Only]** MAST1 or **[Master or Slave]** MAST2

Setting	Description
0...120 s	Setting range **Factory setting**: 30 s

[MultiDrive ErrorResp] MdLb

Response to Multi-Drive Link communication error.

Setting	Code / Value	Description
[Ignore]	no	Detected error ignored
[Freewheel Stop]	YES	Freewheel stop
[Per STT]	Stt	Stop according to **[Type of stop]** Stt parameter but without an error triggered after stop
[Ramp stop]	rMP	Stop on ramp **Factory setting**

[MDL Comm Timeout] MLto

MultiDrive Link communication timeout.

Setting	Description
0.05...10.00 s	Setting range **Factory setting**: 0.25 s

[M/P Device ErrorResp] MPdb

Response to multipump device error.

Setting	Code / Value	Description
[Ignore]	no	Detected error ignored
[Freewheel Stop]	YES	Freewheel stop
[Per STT]	Stt	Stop according to **[Type of stop]** Stt parameter but without an error triggered after stop
[Ramp stop]	rMP	Stop on ramp **Factory setting**

[Pumps configuration] PuMP - Menu

Access

[Complete settings] ➡ **[Pump functions]** ➡ **[Booster control]** ➡ **[System architecture]** ➡ **[Pumps configuration]**

Input and Output Configuration for Each Pump

For each pump (pump 1 in the example), it is possible to set:

- The drive digital output for the command: **[Pump 1 Cmd Assign]** MPo1 if **[Lead Pump Alternation]** MPLA is not set to **[No]** no.
- The drive digital input for the pump availability information: **[Pump 1 Ready Assign]** MP r1. If not configured, the pump is considered as always available.

An internal configurable delay **[Pump Ready Delay]** MP rd is available. When the digital input assigned to **[Pump 1 Ready Assign]** MP r1 switches to the active state or after de-staging, the related pump is considered as not available during **[Pump Ready Delay]** MP rd.

This is used to wait that the auxiliary pumps are stopped and that all contactors between the drive and the motor (if existing) are closed before staging.

[Pump 1 Cmd Assign] MPo1 ★

Command assignment for pump 1.

This parameter can be accessed if:

- **[Pump System Archi]** MPSA is set to **[Multi Drives]** nVSd or **[Multi Masters]** nVSdr or,
- **[Pump System Archi]** MPSA is set to **[Single Drive]** VndoL and **[Nb Of Pumps]** MPPn is set to **[1]** 1 or above.

This parameter can be accessed if **[Nb Of Pumps]** MPPn is set to **[1]** 1 or above.

Setting	Code / Value	Description
[No]	no	Not assigned **Factory setting**
[R2]...**[R3]**	r2...r3	Relay output R2...R3
[R4]...**[R6]**	r4...r6	Relay output R4...R6 if VW3A3204 relay output option module has been inserted
[DQ11 Digital Output]...**[DQ12 Digital Output]**	do11...do12	Digital output DQ11...DQ12 if VW3A3203 I/O extension module has been inserted
[R61]…**[R66]**	r61...r66	Relay R61 …R66 **NOTE:** This selection can be accessed on ATV660 and ATV680 equipped with Cabinet IO

[Pump 1 Ready Assign] MP r1 ★

Pump 1 ready to operate assignment.

This parameter can be accessed if **[Nb Of Pumps]** MPPn is set to **[1]** 1 or above.

Setting	Code / Value	Description
[Not Assigned]	no	Not assigned **Factory setting**
[DI1]...**[DI6]**	L1...L6	Digital input DI1...DI6
[DI11]...**[DI16]**	L11...L16	Digital input DI11...DI16 if VW3A3203 I/O extension module has been inserted
[CD00]...**[CD10]**	Cd00...Cd10	Virtual digital input CMD.0...CMD.10 in **[I/O profile]** Io configuration
[CD11]...**[CD15]**	Cd11...Cd15	Virtual digital input CMD.11...CMD.15 regardless of configuration
[C101]...**[C110]**	C101...C110	Virtual digital input CMD1.01...CMD1.10 with integrated Modbus Serial in **[I/O profile]** Io configuration
[C111]...**[C115]**	C111...C115	Virtual digital input CMD1.11...CMD1.15 with integrated Modbus Serial regardless of configuration

Setting	Code / Value	Description
[C201]...[C210]	C201...C210	Virtual digital input CMD2.01...CMD2.10 with CANopen® fieldbus module in **[I/O profile]** IO configuration
[C211]...[C215]	C211...C215	Virtual digital input CMD2.11...CMD2.15 with CANopen® fieldbus module regardless of configuration
[C301]...[C310]	C301...C310	Virtual digital input CMD3.01...CMD3.10 with a fieldbus module in **[I/O profile]** IO configuration
[C311]...[C315]	C311...C315	Virtual digital input CMD3.11...CMD3.15 with a fieldbus module regardless of configuration
[C501]...[C510]	C501...C510	Virtual digital input CMD5.01...CMD5.10 with integrated Ethernet Modbus TCP in **[I/O profile]** IO configuration
[C511]...[C515]	C511...C515	Virtual digital input CMD5.11...CMD5.15 with integrated Ethernet Modbus TCP regardless of configuration
[DI1 (Low level)]...[DI6 (Low level)]	LIL...L6L	Digital input DI1...DI6 used at low level

[Pump 2 Cmd Assign] PPo2 ★

Command assignment for pump 2.

This parameter can be accessed if **[Nb Of Pumps]** PPPn is set to **[2]** 2 or above.

Identical to **[Pump 1 Cmd Assign]** PPo1 *(see page 267)*.

[Pump 2 Ready Assign] PPr2 ★

Pump 2 ready to operate assignment.

This parameter can be accessed if **[Nb Of Pumps]** PPPn is set to **[2]** 2 or above.

Identical to **[Pump 1 Ready Assign]** PPr1 *(see page 267)*.

[Pump 3 Cmd Assign] PPo3 ★

Command assignment for pump 3.

This parameter can be accessed if **[Nb Of Pumps]** PPPn is set to **[3]** 3 or above.

Identical to **[Pump 1 Cmd Assign]** PPo1 *(see page 267)*.

[Pump 3 Ready Assign] PPr3 ★

Pump 3 ready to operate assignment.

This parameter can be accessed if **[Nb Of Pumps]** PPPn is set to **[3]** 3 or above.

Identical to **[Pump 1 Ready Assign]** PPr1 *(see page 267)*.

[Pump 4 Cmd Assign] PPo4 ★

Command assignment for pump 4.

This parameter can be accessed if **[Nb Of Pumps]** PPPn is set to **[4]** 4 or above.

Identical to **[Pump 1 Cmd Assign]** PPo1 *(see page 267)*.

[Pump 4 Ready Assign] PPr4 ★

Pump 4 ready to operate assignment.

This parameter can be accessed if **[Nb Of Pumps]** PPPn is set to **[4]** 4 or above.

Identical to **[Pump 1 Ready Assign]** PPr1 *(see page 267)*.

[Pump 5 Cmd Assign] ΠPo5 ★

Command assignment for pump 5.

This parameter can be accessed if **[Nb Of Pumps]** ΠPPn is set to **[5]** 5 or above.

Identical to **[Pump 1 Cmd Assign]** ΠPo1 *(see page 267)*.

[Pump 5 Ready Assign] ΠP r5 ★

Pump 5 ready to operate assignment.

This parameter can be accessed if **[Nb Of Pumps]** ΠPPn is set to **[5]** 5 or above.

Identical to **[Pump 1 Ready Assign]** ΠP r1 *(see page 267)*.

[Pump 6 Cmd Assign] ΠPo6 ★

Command assignment for pump 6.

This parameter can be accessed if **[Nb Of Pumps]** ΠPPn is set to **[6]** 6 or above.

Identical to **[Pump 1 Cmd Assign]** ΠPo1 *(see page 267)*.

[Pump 6 Ready Assign] ΠP r6 ★

Pump 6 ready to operate assignment.

This parameter can be accessed if **[Nb Of Pumps]** ΠPPn is set to **[6]** 6 or above.

Identical to **[Pump 1 Ready Assign]** ΠP r1 *(see page 267)*.

[System Architecture] ΠPq - Menu

Access

[Complete settings] ➡ **[Pump functions]** ➡ **[Booster control]** ➡ **[System architecture]**

[Pump Cycling Mode] ΠPPC

Pump cycling mode.

Setting	Code / Value	Description
[FIFO]	FIFo	First in first out
[LIFO]	LIFo	Last in first out
[Runtime]	rtIME	Pump runtime **Factory setting**
[Runtime&LIFO]	rtLF	Runtime and Last in first out **NOTE:** This choice is not available if **[Pump System Archi]** ΠPSA is set to **[Multi Drives]** nVSd or **[Multi Masters]** nVSdr.

[Lead Pump Alternation] ΠPLA

Lead pump alternation.

This parameter can be accessed if **[Pump System Archi]** ΠPSA is set to **[Single Drive]** VndoL

NOTE: If **[Lead Pump Alternation]** ΠPLA is not set to **[No]** no, the **[Pump 1 Cmd Assign]** ΠPo 1 and **[Pump 1 Ready Assign]** ΠP 1 1 have to be configured.

Setting	Code / Value	Description
[No]	no	Deactivated **Factory setting**
[Standard]	YES	Standard alternation
[Redundancy]	rEd	Redundancy mode

[Pump Auto Cycling] ΠPCP

Pump auto cycling.

This parameter can be accessed if **[Pump System Architecture]** ΠPSA is set to **[Single Drive]** VndoL.

Setting	Description
0.0...24.0 h	Setting range **Factory setting**: 0.0 h

[Pump Ready Delay] ΠP 1d

Pump ready delay.

It corresponds to the stop time of the pumps. The pumps are considered as in running state and can not be staged during this delay, whatever the active command channel.

Setting	Description
0...3600 s	Setting range **Factory setting**: 0 s

[MultiPump ErrorResp] ΠPFb

Response to multipump error.

This parameter can be accessed if **[Pump System Archi]** ΠPSA is set to **[Single Drive]** Vndol

Setting	Code / Value	Description
[Ignore]	no	Detected error ignored
[Freewheel Stop]	yES	Freewheel stop **Factory setting**
[Per STT]	Stt	Stop according to **[Type of stop]** Stt parameter but without an error triggered after stop
[Ramp stop]	rMP	Stop on ramp

[Booster control] bSC - Menu

Access

[Complete settings] ➡ **[Pump functions]** ➡ **[Booster control]** ➡ **[Booster control]**

About This Menu

This menu is used to set the booster control parameters.

Multiple drives control

The multiple drives control mode is configured using **[M/P Speed Mode]** ΠPSt.

It has an effect on how the pump speed will be managed when running together.

This parameter must be the same on all the drives of MultiPump architecture

Distributed Speed Control Mode

If **[M/P Speed Mode]** ΠPSt is set to **[Distributed]** dΠC, the pumps will be staged and destaged one by one. With this selection, the last staged pump runs at variable speed and other pumps run at fixed speed.

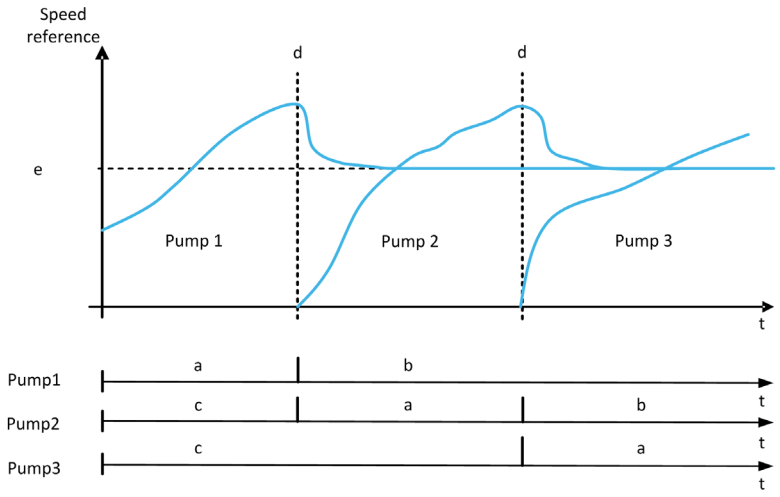

a Pump runs at variable speed
b Pump runs at fixed speed
c Pump stopped
d Pump staging
e Fixed reference frequency in distributed mode: **[Pump Fixed Freq]** ΠPFS

Advanced Speed Control Mode

If **[M/P Speed Mode]** *MPSt* is set to **[Advanced]** *AdC*, the pumps are staged and destaged one by one. With this selection, all pumps run at the same speed.

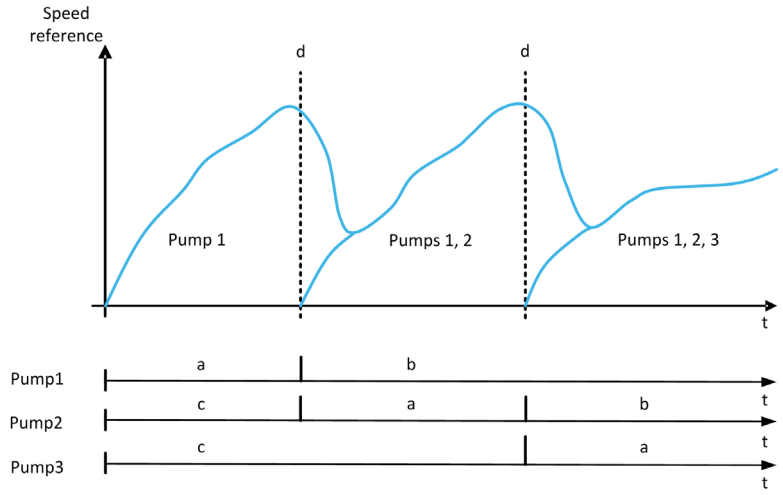

a Pump runs at variable speed
b Pump speed follows the last staged pump speed
c Pump stopped
d Pump staging

Synchronized Speed Control Mode

If **[M/P Speed Mode]** *MPSt* is set to **[Synchronized]** *SYnC*, the pumps are staged and destaged simultaneously. With this selection, all pumps run at the same speed.

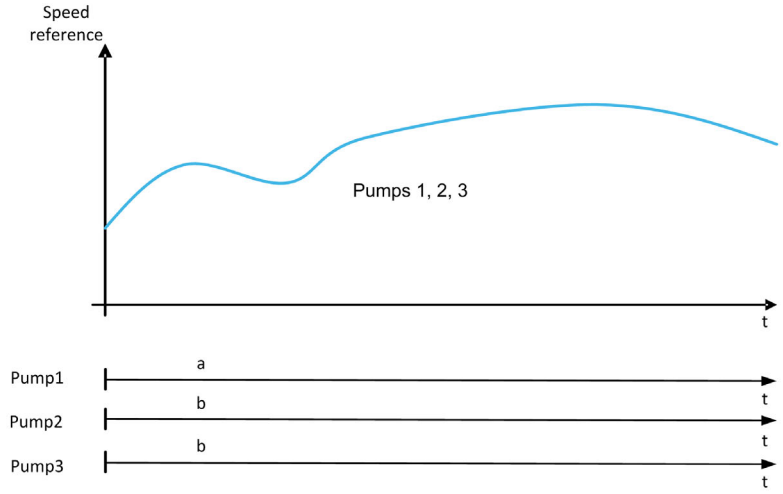

a Pump runs at variable speed
b Pump speed follows the pump 1 speed

[Booster Control] *bCO*

Booster control activation.

Setting	Code / Value	Description
[No]	*no*	Booster control function disabled **Factory setting**
[Yes]	*YES*	Booster control function enabled

[Type of Control] tOCt

Type of control for the PID = unit choice.

This parameter can be accessed if:
- **[Pump System Archi]** MPSA is set to **[Multi Drives]** nVSD or **[Multi Masters]** nVSdr and,
- **[Booster Control]** bCM is set to **[Yes]** YES.

Setting	Code / Value	Description
[nA]	nA	(without unit) **Factory setting**
[Pressure]	PrESS	Pressure control and unit
[Flow]	FLoW	Flow control and unit
[Other]	otHEr	Other control and unit (%)

[M/P Speed Mode] MPSt

Multipump speed mode selection

This parameter can be accessed if:
- **[Pump System Archi]** MPSA is set to **[Multi Drives]** nVSd or **[Multi Masters]** nVSdr and,
- **[M/P Device Role]** MPdt is set to **[Master]** MASt or **[Master Only]** MAS1 or **[Master or Slave]** MAS2.

Setting	Code / Value	Description
[Distributed]	dMC	Distributed multipump speed control mode
[Advanced]	AMC	Advanced multipump speed control mode **Factory setting**
[Synchronized]	SYnC	Synchronized multipump speed control mode

[Pump Fixed Freq] MPFS ★

Pump fixed frequency in distributed mode

This parameter can be accessed if **[M/P Speed Mode]** MPSt is set to **[Distributed]** dMC.

Setting	Description
0.0...500.0 Hz	Setting range **Factory setting**: 50 Hz

[Booster Nb Of Pumps] bCPn ★

Booster number of pumps

Maximum number of pumps that can operate in the same time.

NOTE: If set to 0, there is no maximum defined. All the pumps of the architecture can be used.

This parameter can be accessed if:
- **[Booster Control]** bCM is set to **[Yes]** YES and,
- **[M/P Speed Mode]** MPSt is not set to **[Synchronized]** SYnC

This parameter can be accessed if **[M/P Speed Mode]** MPSt is set to **[Distributed]** dMC or **[Advanced]** AMC.

Setting	Description
0...6	Setting range **Factory setting**: 0

[Stage/Destage condition] SdCM - Menu

Access

[Complete settings] ➡ **[Pump functions]** ➡ **[Booster control]** ➡ **[Booster control]** ➡ **[Stage/Destage condition]**

About This Menu

It is necessary to specify how the stage and de-stage conditions are managed by setting the **[Stage/Destage condition]** SdCM - menu:

- **[Speed]** SPd: staging/de-staging occurs according to conditions on the drive output frequency (Lead pump velocity).
- **[Feedback]** FbK : staging/de-staging occurs according to conditions on the outlet pressure feedback.
- **[Speed+Flow]** SPFL : staging occurs according to conditions on the drive output frequency (pump velocity), de-staging occurs according to flow conditions.
- **[Feedback+Flow]** FbFL : staging occurs according to conditions on the outlet pressure feedback, de-staging occurs acording to flow conditions.
- **[Energy Optimized]** oPt: staging/de-staging occurs automatically to optimize the energy consumption of the system.

After a staging or de-staging condition is taken into account, no new staging or de-staging can occur during **[Booster S/D Interval]** bSdt delay. This is applied in any case, regardless of the settings of the function.

Staging/Destaging on Speed Condition

- Staging occurs if the reference frequency stays above **[Booster Stg Speed]** bSS for longer than **[Booster Stg Delay]** bSd.
- De-staging occurs if the reference frequency stays below **[Booster Dstg Speed]** bdS for longer than **[Booster Dstg Delay]** bdd.

Staging/Destaging on Pressure Feedback Condition

- The working area **[Booster Working Range]** bCWR is expressed in a % of the reference value for the pressure.
- Staging occurs if PID error (taking into account **[PID Inversion]** PIC) stays below the working area while PID controller is at high limit speed for longer than **[Booster Stg Delay]** bSd.
  High limit speed corresponds to limitation speed of PID (minimum between **[High Speed]** HSP & **[PID Max Output]** PoH).
- De-staging occurs if PID error (taking into account **[PID Inversion]** PIC) stays above working area while PID controller is at low limit speed, for longer than **[Booster Dstg Delay]** bdd.
  Low limit speed corresponds to speed at which PID controller has no effect (maximum between **[Low Speed]** LSP & **[PID Min Output]** PoL).

Destaging on Flow Condition

- If **[Booster S/D Condition]** bSdC is set to **[Speed+Flow]** SPFL : staging occurs according to Speed condition (see Staging/Destaging on Speed Condition description).
- If **[Booster S/D Condition]** bSdC is set to **[Feedback+Flow]** FbFL : staging occurs according to Pressure Feedback condition (see Staging/Destaging on Pressure Feedback Condition description).
- De-staging occurs according to flow level **[Booster Dstg Flow]** bdF. Flow sensor or estimated system flow needs to be configured.
- If the **[Booster Dstg Flow]** bdF level is not reached and if pump is running at its low speed, de-staging occurs.

Staging/Destaging on Energy Optimized

If **[Booster S/D Condition]** *bSdC* is set to **[Energy Optimized]** *oPt*, staging/de-staging occurs automatically according to the pump characteristics to optimize the energy consumption of the system.

- This method can be selected if the pump curve characteristics are configured with **[Mode]** *PCM* = **[PHQ]** *PHQ*.
- The flow sensor or estimated system flow needs to be configured.
- **[Booster S/D Flow Hyst]** *bSdH* can be used to avoid many stage/de-stage of pumps.
- **[Head Static Offset]** *HEo* and **[Head Dynamic Gain]** *HEG* needs to be configured to have a good estimation of the required head according to the pressure setpoint.
- **[Pump Op Point Filter]** *WPXF* can be used to filter the pump operating point.

Staging/Destaging on Override

The override area is used whatever the configuration of the system and the strategy used.If the pressure feedback is out of the **[Booster Override Range]** *bCoA* range, expressed in % of the reference value for the pressure, a staging/de-staging is immediate. This increases the reactivity of the system in case of an important and rapid variation of the demand. It allows suppressing the staging/de-staging delay.

[Boos S/D Condition] *bSdC*

Booster stage/de-stage condition.

NOTE: The stage/de-stage condition list depends of the setting of **[M/P Speed Mode]** *MPSt*

Setting	Code / Value	Description
[Speed]	*SPd*	Staging/De-staging on speed condition
[Feedback]	*FbK*	Staging/De-staging on pressure feedback condition **Factory setting**
[Speed+Flow]	*SPFL*	Staging on speed, de-staging on flow condition
[Feedback+Flow]	*FbFL*	Staging on pressure feedback, de-staging on flow condition
[Energy Optimized]	*oPt*	Staging/De-staging automatically for energy optimization

[Inst. Flow Assign.] *FSIA* ★

Installation flow sensor assignment.

This parameter can be accessed if:

- **[Booster Control]** *bCM* is set to **[Yes]** *YES*
- **[Booster S/D Condition]** *bSdC* is set to **[Speed+Flow]** *SFPL*

Setting	Code / Value	Description
[Not Configured]	*no*	Not assigned **Factory setting**
[AI1]...**[AI3]**	*AI1*...*AI3*	Analog input AI1...AI3
[AI4]...**[AI5]**	*AI4*...*AI5*	Analog input AI4...AI5 if VW3A3203 I/O extension module has been inserted
[AI Virtual 1]...**[AI Virtual 3]**	*AIV1*...*AIV3*	Virtual analogic input 1...3
[Di5 PulseInput Assignment]...**[Di6 PulseInput Assignment]**	*P15*...*P16*	Digital input DI5...DI6 used as pulse input
[Est. Pump Flow]	*SLPF*	Sensor less estimated flow
[Est. System Flow]	*SLSF*	Estimated system flow This selection is only possible if **[Pump System Archit]** *MPSA* is set to **[Multi Drives]** *nVSd* or **[Multi Masters]** *nVSdr* **NOTE:** To use this selection, all the pump characteristics of the system must be configured.
NOTE: For sensor configuration, refer to section **[Sensors assignment]** *(see page 216)*.		

[Booster Working Range] bCWA ★

Booster working area in % of the reference value for the pressure.

This parameter can be accessed if **[Booster S/D Condition]** bSdC is set to **[Feedback]** FbK.

Setting	Description
1.0...100.0%	Setting range in % of the reference value for the pressure **Factory setting**: 2.0%

[Booster Stg Speed] bSS ★

Booster stage speed.

This parameter can be accessed if **[Booster S/D Condition]** bSdC is set to **[Speed]** SPd.

Setting	Description
0.0...500.0 Hz	Setting range **Factory setting**: 50.0 Hz

[Booster Dstg Speed] bdS ★

Booster de-stage speed.

This parameter can be accessed if **[Booster S/D Condition]** bSdC is set to **[Speed]** SPd.

Setting	Description
0.0...500.0 Hz	Setting range **Factory setting**: 40.0 Hz

[Booster Dstg Flow] bdF ★

Booster destage flow.

This parameter can be accessed if **[Booster S/D Condition]** bSdC is set to **[Speed+Flow]** SPFL or **[Feedback+Flow]** FbFL.

Setting	Description
0.0...3276.7	Setting range **Factory setting**: 0.0

[Booster Stg Delay] bSd

Booster stage delay.

This parameter can be accessed if **[M/P Speed Mode]** MPSt is not set to **[Synchronized]** SYnC.

Setting	Description
0.0...999.9 s	Setting range **Factory setting**: 10.0 s

[Booster Dstg Delay] bdd

Booster de-stage delay.

This parameter can be accessed if **[M/P Speed Mode]** MPSt is not set to **[Synchronized]** SYnC.

Setting	Description
0.0...999.9 s	Setting range **Factory setting**: 10.0 s

[Booster Override Range] bCoA

Booster override range.

This parameter can be accessed if **[M/P Speed Mode]** MPSt is not set to **[Synchronized]** SYnC.

Setting	Code / Value	Description
[No]	no	Booster override range disabled **Factory setting**
0.1...100.0%		Setting range

[Booster S/D Flow Hyst] bSdH

Booster stage/destage flow hysteresis.

This parameter can be used to avoid many stage/de-stage of pumps.

This parameter can be accessed if **[Booster S/D Condition]** bSdC is set to **[Energy Optimized]** oPt.

Setting	Description
0.0...100.0%	Setting range. Percentage of nominal pump flow. **Factory setting**: 3.0%

[Head Static Offset] HEo ★

Head static offset.

This parameter can be accessed if **[Booster S/D Condition]** bSdC is set to **[Energy Optimized]** oPt.

This parameter must be configured to allow good estimation of head.

Setting	Description
-100.0...100.0%	Setting range **Factory setting**: 0.0%

[Head Dynamic Gain] HEG ★

Head dynamic gain.

This parameter can be accessed if **[Booster S/D Condition]** bSdC is set to **[Energy Optimized]** oPt.

This parameter must be configured to allow good estimation of head.

Setting	Description
-100.0...100.0%	Setting range **Factory setting**: 0.0%

[Pump Op Point Filter] WPXF ★

Pump operating point filter.

- **[Booster S/D Condition]** bSdC is set to **[Energy Optimized]**oPt, and
- Mode PCM is not set to **[No]** no.

This parameter can be accessed if **[Mode]** PCM is not set to **[No]** no.

Setting	Description
0.00 s...60.00 s	Setting range **Factory setting**: 1.00 s

[Stage/Destage method] 5dMM - Menu

Access

[Complete settings] ➡ **[Pump functions]** ➡ **[Booster control]** ➡ **[Booster control]** ➡ **[Stage/Destage method]**

About This Menu

The stage/de-stage method is set by **[Booster S/D Control]** bSdM parameter:

- **[Speed]** bSPd: during stage/de-stage, PID controller is by-passed and a fixed reference frequency is applied.
- **[Feedback]** bFb: outlet pressure remains regulated by the PID controller during stage/de-stage.
- **[Advanced]** AdVC: outlet pressure remains regulated by the PID controller during stage/de-stage and disturbances due to stage/de-stage are taken into account by the PID controller to reduce them.

NOTE: When **[Pump System Archi]** MPSA is not set to **[Simple Drive]** VndoL, only **[Feedback]** bFb method is available.

Staging/Destaging on Speed Control

When the staging is requested, after the delay **[Booster Stg Ramp Delay]** bSrd, the variable speed pump output frequency is reduced to reach **[Booster Stg Bypass Spd]** bSbS according to **[Booster Stg Bypass Time]** bSbt.

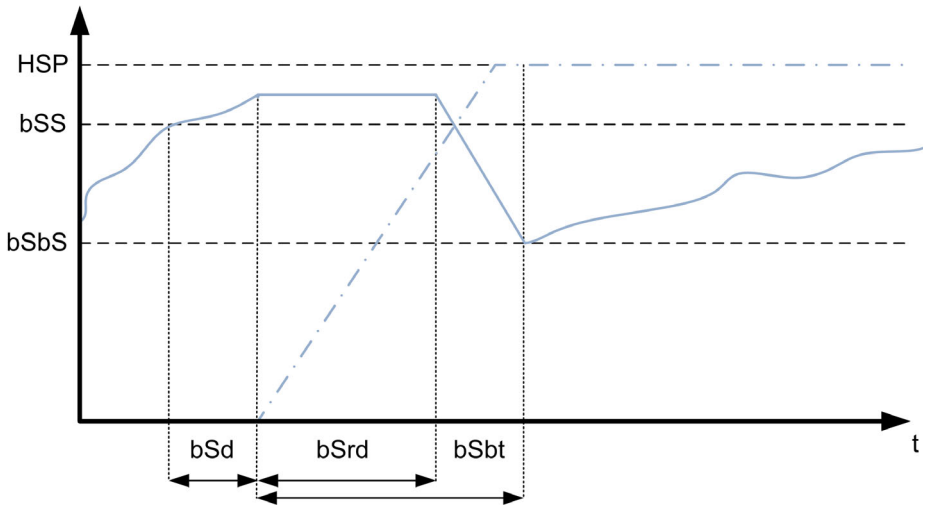

When the de-staging is requested, after the delay **[Booster Dstg Ramp Delay]** bdrd, the variable speed pump output frequency is increased to reach **[Booster Dstg Bypass Spd]** bdbS according to **[Booster Dstg Bypass Time]** bdbt.

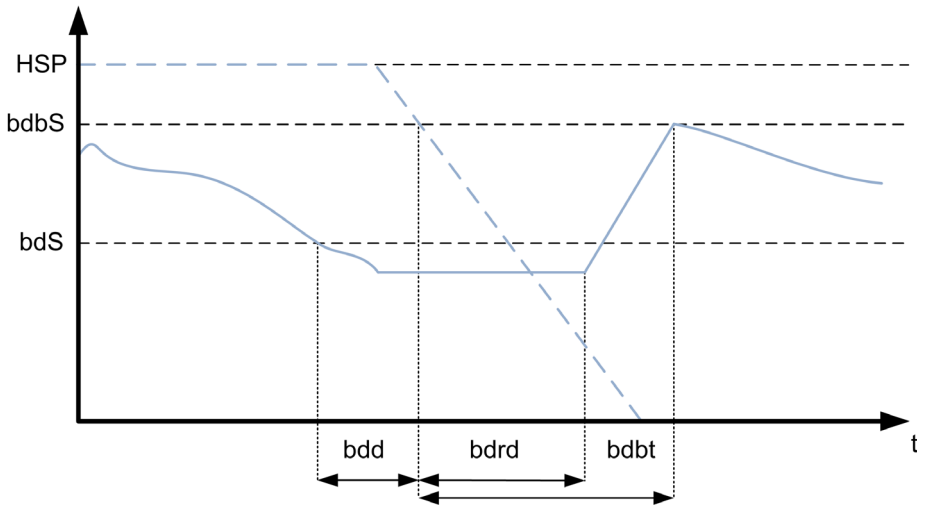

Staging/Destaging on Pressure Feedback Control

- When the staging is requested, a pump is started and the outlet pressure remains regulated according to the PID controller settings.
- When the de-staging is requested, a pump is stopped and the outlet pressure remains regulated according to the PID controller settings.

Staging/Destaging on Advanced Pressure Control

- When the staging is requested, a pump is started after the **[FeedFwd Stage Delay]** *FFSd* and the outlet pressure remains regulated according to the PID controller settings, in addition to a feedforward strategy to reduce the pressure overshoot.
- When the de-staging is requested, a pump is stopped after the **[FeedFwd Destage Delay]** *FFdd* and the outlet pressure remains regulated according to the PID controller settings, in addition to a feedforward strategy to reduce the pressure undershoot.
- The PID controller speed loop parameters should be adjusted to compensate the pressure variation linked to the normal operation of the system (close or open valves for example) without staging or de-staging a pump. The aim of the feedforward function is to reduce the overshoot or undershoot following a pump stage or de-stage. These two parameters should be set without variations generated by the system (close or open valves for example). The feedforward parameters should be adjusted after the PID controller is set.
- The **[FeedFwd Disturb Gain]** *FFG* parameter is a static gain that should be adjusted to reduce the maximum value of the output pressure overshoot or undershoot following a pump stage or de-stage.
- The **[FeedFwd Disturb Time]** *FFtG* parameter correspond to the time between the pump stage or de-stage command to the time when the maximum value of the output pressure overshoot or undershoot following a pump stage or de-stage is reached.

[Booster S/D Control] *bSdM*

Booster stage/de-stage control.

Setting	Code / Value	Description
[Speed]	*bSPd*	Basic speed
[Feedback]	*bFbK*	Basic feedback **Factory setting**
[Advanced]	*AdVC*	Advanced

[Booster Stg Bypass Speed] *bSbS* ★

Booster stage bypass speed.

This parameter can be accessed if **[Booster S/D Control]** *bSdM* is set to **[Speed]** *bSPd*.

Setting	Description
0.0...500.0 Hz	Setting range **Factory setting**: 45.0 Hz

[Booster Stg Bypass Time] *bSbt* ★

Booster stage bypass time.

This parameter can be accessed if **[Booster S/D Control]** *bSdM* is set to **[Speed]** *bSPd*.

Setting	Description
0.0...999.9 s	Setting range **Factory setting**: 3.0 s

[Booster Stg Ramp Delay] b S r d ★

Booster stage ramp delay.

This parameter can be accessed if **[Booster S/D Control]** b S d M is set to **[Speed]** b S P d.

Setting	Description
0.0...999.9 s	Setting range **Factory setting**: 1.0 s

[Booster Dstg Bypass Spd] b d b S ★

Booster de-stage bypass speed.

This parameter can be accessed if **[Booster S/D Control]** b S d M is set to **[Speed]** b S P d.

Setting	Description
0.0...500.0 Hz	Setting range **Factory setting**: 50.0 Hz

[Booster Dstg Bypass Time] b d b t ★

Booster de-stage bypass time.

This parameter can be accessed if **[Booster S/D Control]** b S d M is set to **[Speed]** b S P d.

Setting	Description
0.0...999.9 s	Setting range **Factory setting**: 1.0 s

[Booster Dstg Ramp Delay] b d r d ★

Booster de-stage ramp delay.

This parameter can be accessed if **[Booster S/D Control]** b S d M is set to **[Speed]** b S P d.

Setting	Description
0.0...999.9 s	Setting range **Factory setting**: 0.0 s

[FeedFwd Stage Delay] F F S d ★

Feed forward stage delay.

This parameter can be accessed if **[Booster S/D Control]** b S d M is set to **[Advanced]** A d V C.

Setting	Description
0.0...999.9 s	Setting range **Factory setting**: 1.0 s

[FeedFwd Destage Delay] F F d d ★

Feed forward de-stage delay.

This parameter can be accessed if **[Booster S/D Control]** b S d M is set to **[Advanced]** A d V C.

Setting	Description
0.0...999.9 s	Setting range **Factory setting**: 0.0 s

[FeedFwd Disturb Gain] FFG ★

Feed forward disturbance gain.

This parameter can be accessed if **[Booster S/D Control]** bSdM is set to **[Advanced]** AdVC.

Setting	Description
0.0...100.0%	Setting range **Factory setting**: 20.0%

[FeedFwd Disturb Time] FFtG ★

Feed forward disturbance time.

This parameter can be accessed if **[Booster S/D Control]** bSdM is set to **[Advanced]** AdVC.

Setting	Description
0.0...99.9 s	Setting range **Factory setting**: 3.0 s

[Booster control] bSC - Menu

Access

[Complete settings] ➡ **[Pump functions]** ➡ **[Booster control]** ➡ **[Booster control]**

[Booster S/D Interval] bSdt

Booster stage/de-stage time interval.

This parameter can be accessed if:

- **[Booster Control]** bCM is set to **[Yes]** YES and
- **[M/P Speed Mode]** MPSt is not set to **[Synchronized]** Sync

Setting	Description
0.0...999.9 s	Setting range **Factory setting**: 15.0 s

[PID acceleration time] ACCP ★

PID: acceleration during start-up.

PID start ramp can be applied before starting the PID controller to allow reaching quickly the PID reference without increasing PID gains. If configured, the **[Start Accel Ramp]** ACCS is applied up to **[Low Speed]** LSP instead of **[PID acceleration time]** ACCP.

This parameter can be accessed if **[PID feedback]** PiF is not set to **[Not Configured]** no.

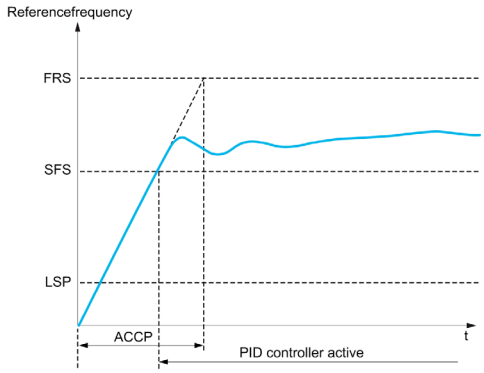

Setting	Description
0.01...99,99 s (1)	Setting range **Factory setting**: 5.00 s
1 Range 0.01 to 99.99 s or 0.1 to 999.9 s or 1...6,000 s according to **[Ramp increment]** inr.	

Section 8.8
[Pump functions] - [Level control]

Introduction

The aim of the level control function is to operate:
- Filling operation
- Emptying operation

This function offers a random level functionality by changing the start and stop level after each operation (at the end of filling or emptying operation) in order to start and stop the next filling or emptying operation from different levels.

The level control function can be used for single pump or multi-pump architecture.

This menu can be accessed if **[Application Selection]** *APPL* is set to **[Pump Level Control]** *LEVEL*.

What Is in This Section?

This section contains the following topics:

Topic	Page
[System architecture] *SYS-* Menu	283
[Pumps configuration] *PUMP-* Menu	283
[Level control] *LCC-* Menu	284
[Level control] *LCC-* Menu	292
[Level settings] *LCL-* Menu	298

[System architecture] ΠP9 - Menu

Access

[Complete settings] ➡ [Pump functions] ➡ [Level control] ➡ [System architecture]

About This Menu

Identical to **[System architecture] ΠP9 -** Menu *(see page 253)*.

[Pumps configuration] PuPP - Menu

Access

[Complete settings] ➡ [Pump functions] ➡ [Level control] ➡ [System architecture] ➡ [Pumps configuration]

About This Menu

Identical to **[Pumps configuration] PuPP -** Menu *(see page 267)*.

[Level control] LCC - Menu

Access

[Complete settings] ➡ **[Pump functions]** ➡ **[Level control]** ➡ **[Level control]**

About This Menu

The function activation is done by setting the **[LevelCtrl Mode]** LCM:

- **[No]** nO: the function is not activated.
- **[Filling]** FILL: the function is activated to operate a filling operation.
- **[Emptying]** EMPTY: the function is activated to operate an emptying operation.

System Configuration

It is necessary to specify how the level of the liquid is acquired by setting the **[LevelCtrl Sensor Type]** LCnT:

- **[Level sensor]** LEVEL or **[Pressure sensor]** PRES: the level information comes from an analog sensor. The value returned by each sensor (sensor 1 in the example) is compared continuously to the configured levels **[Level 1 Pump Start]** LrL 1 and **[Level 1 Pump Stop]** LPL 1. It is necessary to associate an analog input for the level measurement by setting **[Level Sensor Assign]** LCSA.
- **[Level Switches]** SW: the level information comes from digital inputs. In this case. The state of each digital input indicates which pump to start and which pump to stop. The quantity of level switches required is equal to **[Nb Of Pumps]** NPPn. It is necessary to associate digital inputs (digital input 1 in the example) for the level measurement by setting **[Level Switch1 Assign]** LCW 1.

Analog level sensor	Switch level sensor	Analog pressure sensor
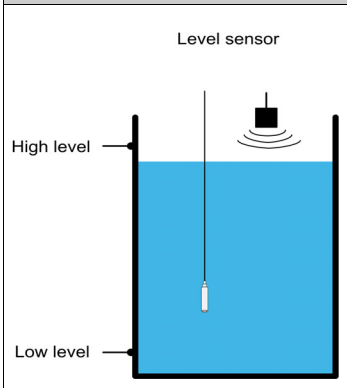	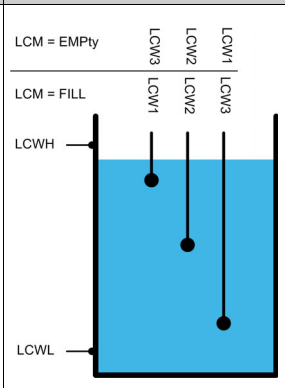	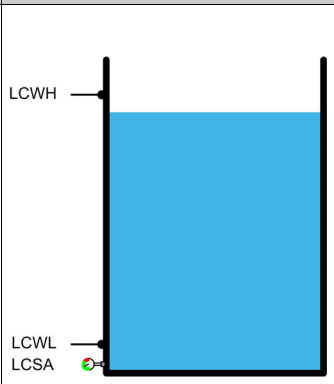

A random level factor **[LevelCtrl Random Factor]** LCrX can be set to reduce sedimentation in the tank. A value of 0% deactivates the function. The start level for the first pump to start and the stop level for the last pump to stop is applied taking into account a random offset based on +/- **[LevelCtrl Random Factor]** LCrX %.

Level Control Strategy

Three level control strategies are available through **[LevelCtrl Strategy]** LCST parameter:

- If using an analog sensor (analog sensor level or pressure sensor), **[Standard]** bASIC level control strategy and **[Energy Optimized]** Adu strategy are available.
- If using level switches, **[Switches]** trAd strategy is available.

[Standard] bAS-C level control strategy

Starting and stopping pump is based on the comparison between the analog level sensor value and configured level values start and stop levels (Example for pump 1: the start level for the first pump to start **[Level 1st Pump Start]** LrL1 and the stop level for the last pump to stop **[Level 1st Pump Stop]** LPL1) according to the number of used pumps in the system.

[Empty Tank Level] LCEJ and **[Full Tank Level]** LCEK should be set to used this level control strategy.

The reference frequency follows a trajectory computed according to the level in tank.

The following figures show the principal of the basic strategy in the case of one pump for filling and emptying process:

Filling

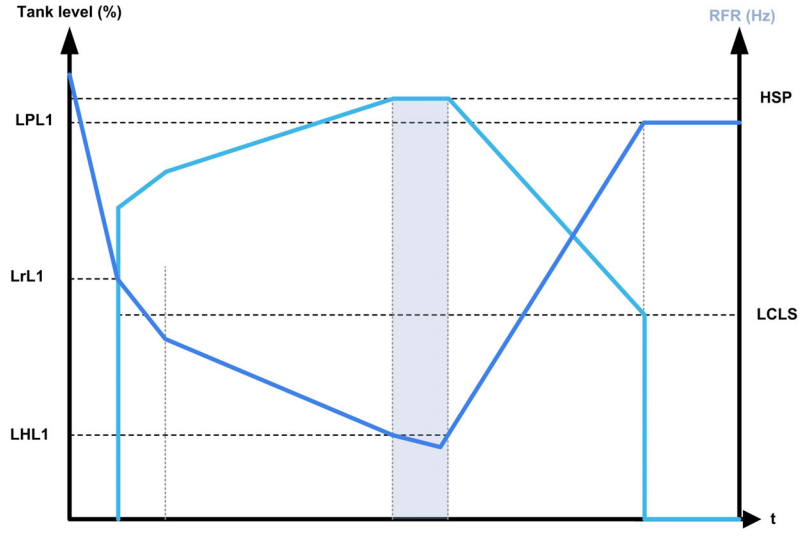

Emptying

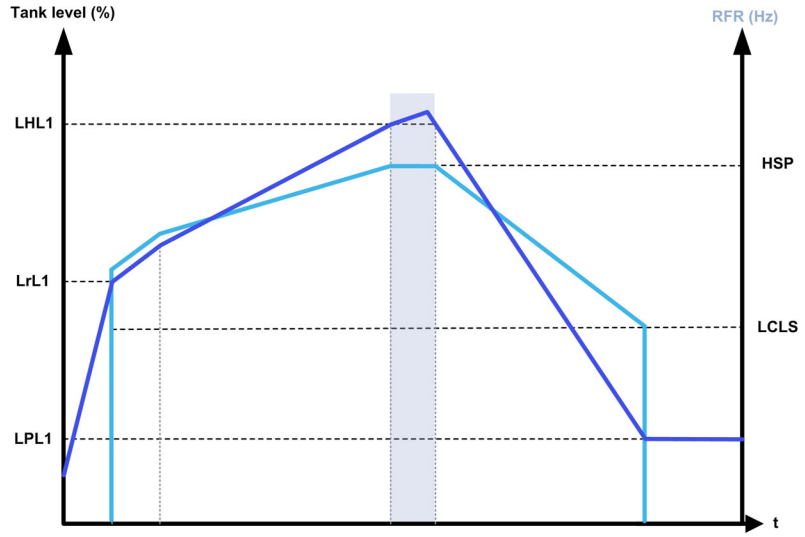

Strategy with one variable speed pump and fixed speed pumps

The following figures show how you can extrapolate this strategy in case of one variable speed pump and two fixed speed pumps:

Filling / three pumps

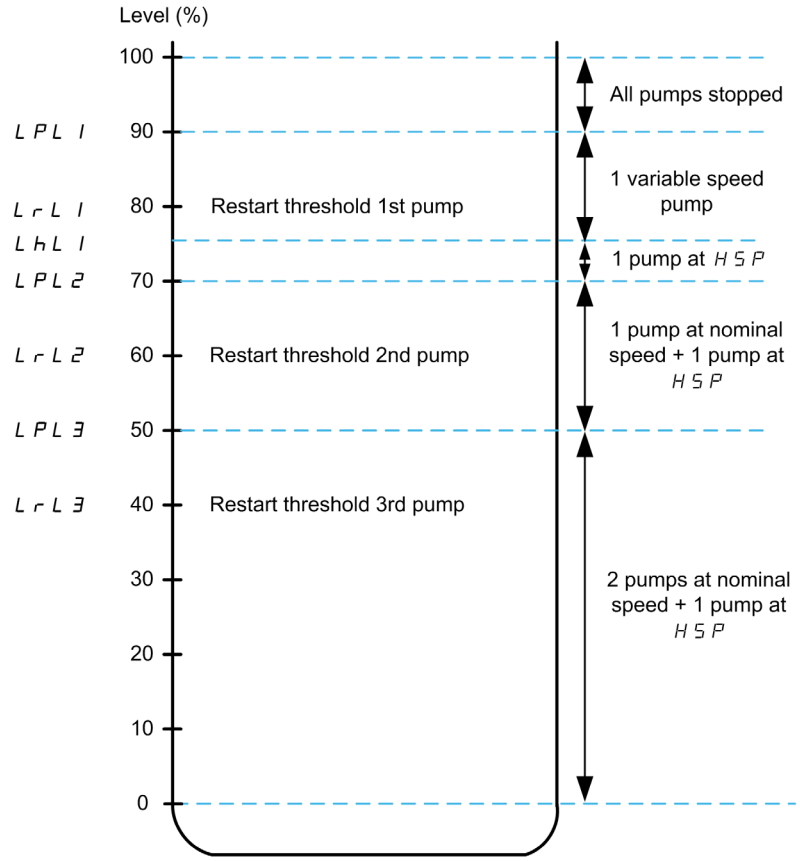

Emptying / three pumps

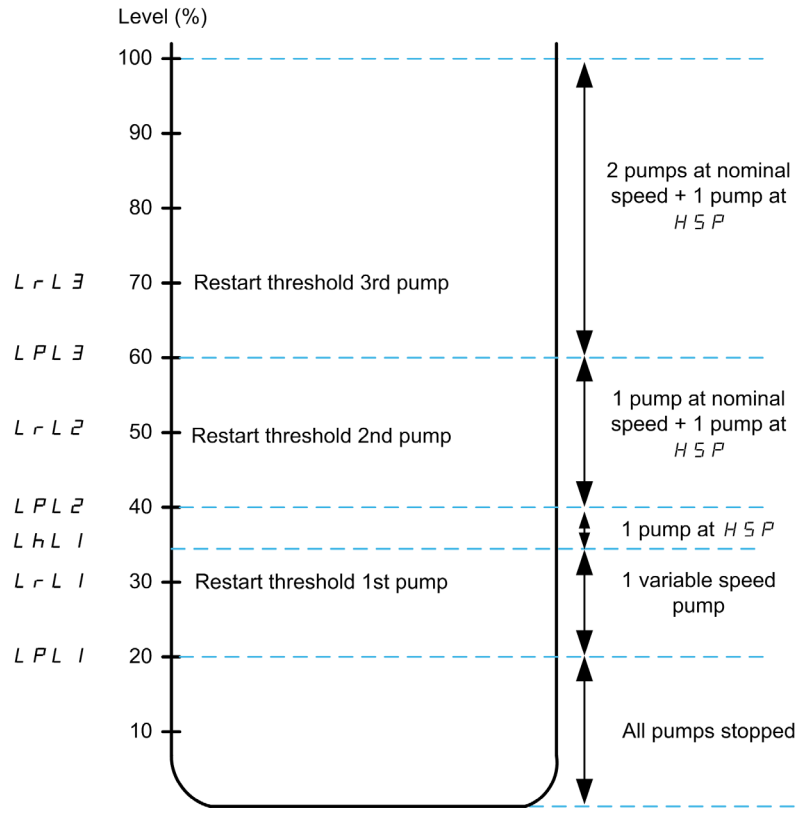

Cycle description example for emptying process with three pumps:

The variable speed pump starts at the first pump to start level **[Level 1st Pump Start]** *LrL 1*. If the level in the tank is still increasing, its frequency reference increases up to **[High Speed]** *HSP*. It corresponds to the tank level **[Level 1st Pump at HSP]** *LHL 1*.

When the level in the tank reaches the second pump to start **[Level 2nd Pump Start]** *LrL 2*, a fixed speed pump starts, the variable speed pumps is still at **[High Speed]** *HSP*.

When the level in the tank reaches the third pump to start level **[Level 3rd Pump Start]** *LrL 3*, the second fixed speed pump starts, the variable speed pumps is still at **[High Speed]** *HSP*.

When the level in the tank decreases under the first pump to stop level **[Level 1st Pump Stop]** *LPL 1*, a fixed speed pump stops, the variable speed pumps is still at **[High Speed]** *HSP*.

When the level in the tank decreases under second pump to stop level **[Level 2nd Pump Stop]** *LPL 2*, the second fixed speed pump stops, the variable speed pumps is still at **[High Speed]** *HSP*.

If the level in the tank is still decreasing, the frequency reference decreases up to **[LevelCtrl Low Speed]** *LCLS*.

When the level in the tank decreases under the third pump to stop level **[Level 3rd Pump Stop]** *LPL 3*, the variable speed pump stops.

Strategy with multiple variable speed pumps

The following figures show how you can extrapolate this strategy in case of multiple variable speed pumps:

Filling / three pumps

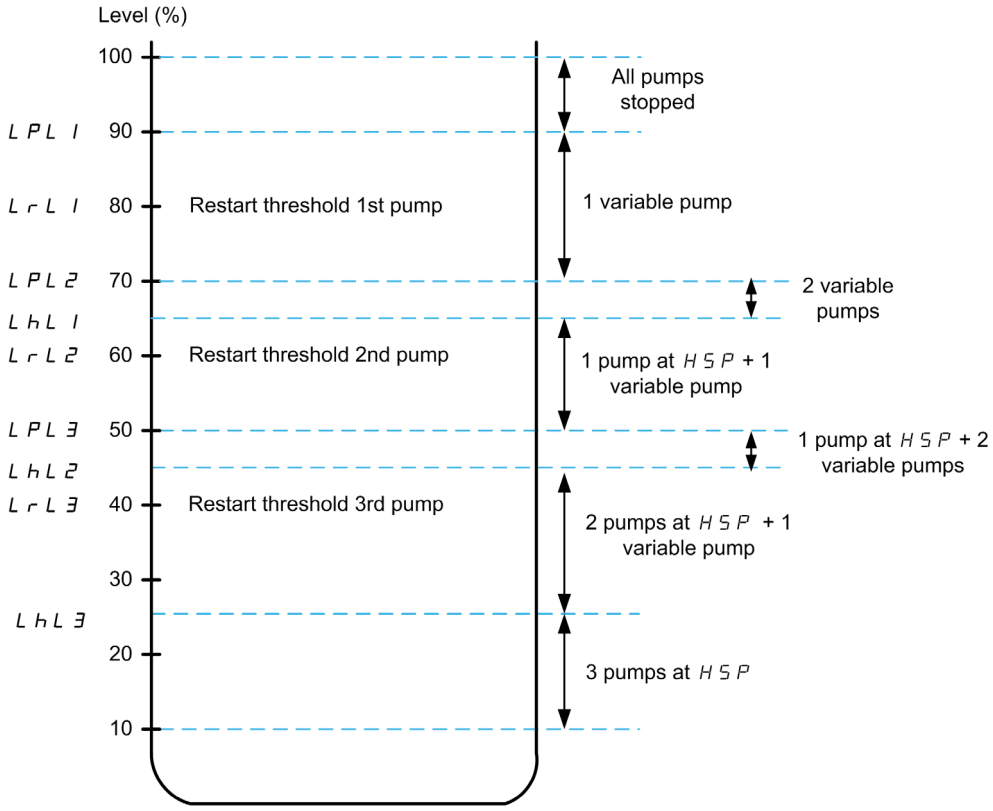

Emptying / three pumps

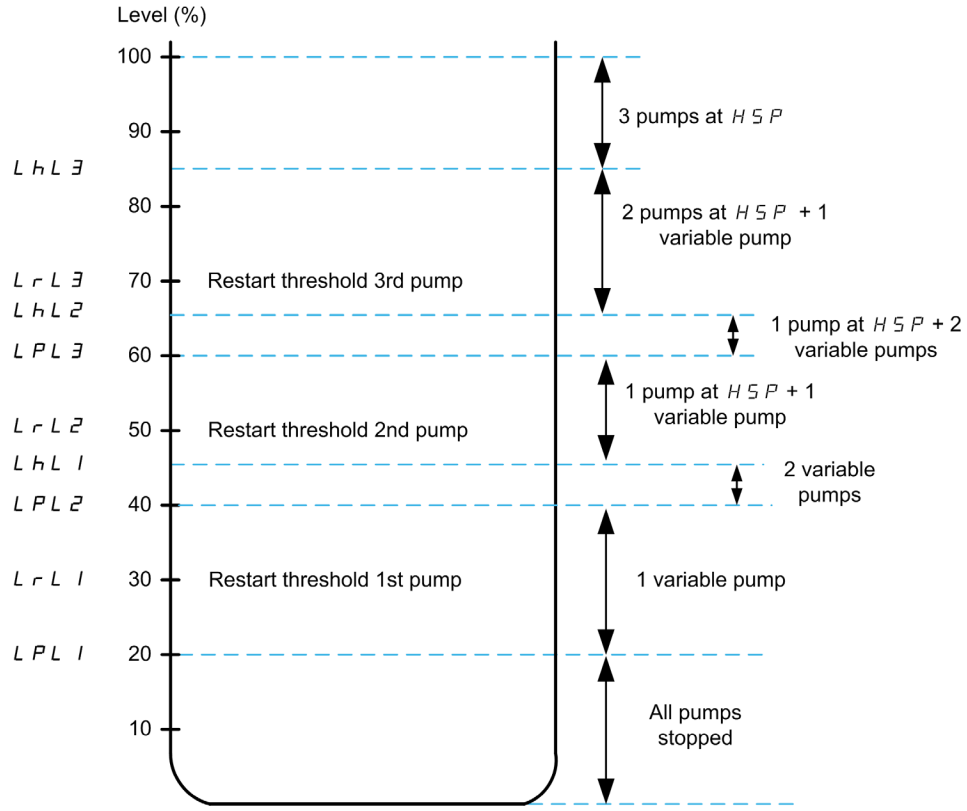

Cycle description example for emptying process with three pumps:

The first pump is started when level reaches the point **[Level 1st Pump Start]** LrL 1. The pump frequency reference is calculated by the system between the point **[Level 1st Pump Stop]** LPL 1 and **[Level 1st Pump at HSP]** LHL 1.

If the level in tank increases, the frequency reference increases until the **[High Speed]** HSP when level in tank reaches **[Level 1st Pump at HSP]** LHL 1 and remains at this frequency reference.

If the level in tank decreases, the frequency reference decreases until **[Low Speed]** LSP when the level in tank reaches **[Level 1st Pump Stop]** LPL 1 and then pump stops.

When the level in tank reaches the second pump to start **[Level 2nd Pump Start]** LrL2, the second pump starts and the two pumps runs at same calculated frequency reference between **[Level 2nd Pump Stop]** LPL2 and **[Level 2nd Pump at HSP]** LHL2.

If the level in tank increases, the frequency reference of the two pumps increases until the **[High Speed]** HSP of each pump when level in tank reaches **[Level 2nd Pump at HSP]** LHL2 and remains at this frequency reference.

If the level in tank decreases, the frequency reference decreases until a calculated low speed (point A of the curve) when the level in tank reaches **[Level 2st Pump Stop]** LPL2 and then second pump stops.

When the level in tank reaches the third pump to start **[Level 3rd Pump Start]** LrL3, the third pump starts and the three pumps runs at same calculated frequency reference between **[Level 3rd Pump Stop]** LPL3 and **[Level 3nd Pump at HSP]** LHL3.If the level in tank increases, the frequency reference of the three pumps increases until the **[High Speed]** HSP of each pump when level in tank reaches **[Level 3rd Pump at HSP]** LHL3 and remains at this frequency reference.

If the level in tank decreases, the frequency reference decreases until a calculated low speed (point B of the curve) when the level in tank reaches **[Level 3rd Pump Stop]** LPL3 and then third pump stops.

[Energy Optimized] AdU strategy

This strategy consists on the internal calculation of the optimal velocity profile which corresponds to the minimum of the energy consumed by the system during a filling or emptying process. The system runs at an optimal working point during the filling or emptying process.

To perform this strategy, following data are required:

- Validated pump curve characteristics (Hn, Pn, Qn at nominal speed). The pump curves should be configured previously in the **[Pump characteristics]** PCr- menu; pump parameterization is valid if the pump curve status **[Status]** PCS equals to **[ACTIVE]** ACtIVE.
- Estimated or measured system flow.
- The volume of the tank **[Tank Volume]** LCtU, the minimum delivery height of the system **[Min Delivery Height]** LCdJ and the maximum delivery height of the system **[Max Delivery Height]** LCdK.

[Switches] trAd strategy

Starting and stopping pumps is based on level switches status (0: OFF or 1: ON).

- If **[Pump System Archi]** MPSA is set to **[Single Drive]** UnddoL, the variable speed pump runs at its nominal speed and auxiliary pumps runs at fixed speed.
- If **[Pump System Archi]** MPSA is set to **[Multi Drives]** nVSd, all pumps are running at their nominal speed.

The following figure shows the principal with the switches strategy (example with 3 pumps):

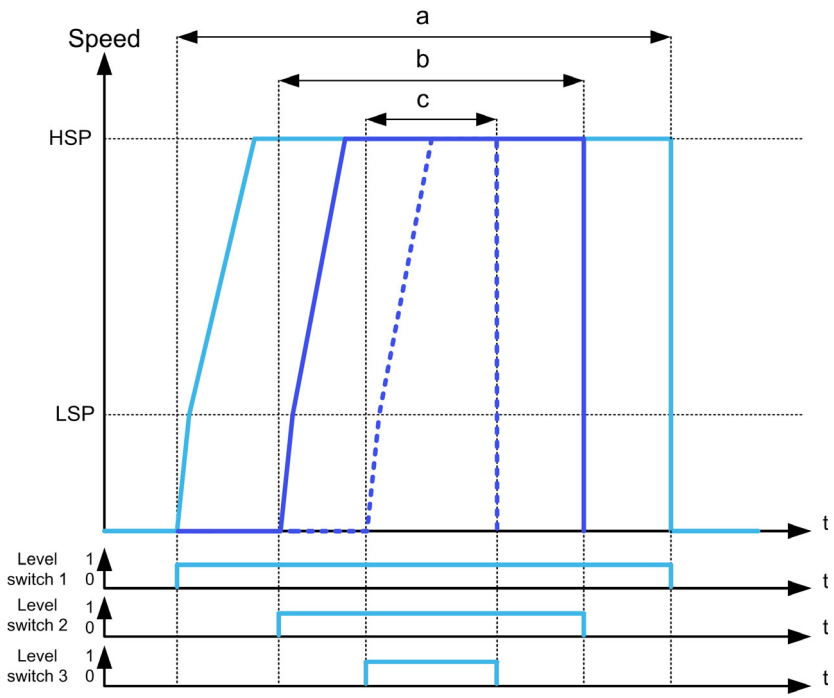

a Variable speed pump 1 (lead pump)
b Fixed or variable speed pump 2
c Fixed or variable speed pump 3

The previous example shows the way that the pumps are stopped if **[LevelCtrl Stop Mode]** LCPM is set to **[Individual Stop]** IndIU. It is possible to stop all the pumps at the same time when level switch 1 changes to OFF state by setting **[LevelCtrl Stop Mode]** LCPM to **[Simultaneous Stop]** CoMM.

Warnings and Errors Handling

- A **[High Level Warning]** LCHA warning is active if the maximum level switch defined by **[Max Level Switch Assign]** LCWL is active.
  If it occurs during filling process, a **[High Level Error]** LCHF error is activated.
  This error is active also if the sensor value reaches 100% of the tank in filling mode and 0% in emptying mode.
- A **[Low Level Warning]** LCLA warning is active if the minimum level switch defined by **[Min Level Switch Assign]** LCWH is active.
  If it occurs during emptying process, a **[Low Level Error]** LCLF error is activated.
- All pumps are stopped in case of **[High Level Error]** LCHF or **[Low Level Error]** LCLF error, whatever the setting of **[LevelCtrl Error Resp]** LCFb.
- A **[Level Switch Warning]** LCWA warning is active in case of an inconsistent feedback from the level switches (for example, if the level switches 1 and 3 are active and the level switch 2 is inactive).

[LevelCtrl Mode] LCM

Level control mode.

This parameter can be accessed if:

- **[Pump System Archi]** MPSA is set to **[Single Drive]** Vndol, or
- **[Pump System Archi]** MPSA is set to **[Multi Drives]** nVSd, and **[M/P Device Role]** MPdE is set to **[Master]** MASt, or
- **[Pump System Archi]** MPSA is set to **[Multi Masters]** nVSdr and,
- **[M/P Device Role]** MPdE is set to **[Master Only]** MAS1 or **[Master or Slave]** MAS2.

Setting	Code / Value	Description
[No]	no	Deactivated **Factory setting**
[Filling]	FILL	Filling mode
[Emptying]	EMPTY	Emptying mode

[LevelCtrl Nb Of Pumps] LCPn ★

Number of pumps used in Level Control

Maximum number of pumps that can operate in the same time

This parameter can be accessed if **[LevelCtrl Mode]** LcM is not set to **[No]** no.

NOTE: If set to 0, there is no maximum defined. All the pumps of the architecture can be used.

Setting	Description
0...6	Setting range **Factory setting**: 0

[LevelCtrl Sensor Type] LCnt ★

Level control sensor type.

This parameter can be accessed if **[LevelCtrl Mode]** LcM is not set to **[No]** no.

Setting	Code / Value	Description
[Level Switches]	SW	Level switches **Factory setting**
[Level Sensor]	LEVEL	Level sensor
[Pressure Sensor]	PrES	Pressure sensor

[Level Sensor Assign] LCSA ★

Level sensor assignment.

This parameter can be accessed if:

- **[LevelCtrl Mode]** LCM is not set to **[No]** nO, and
- **[LevelCtrl Sensor Type]** LCnt is not set to **[Level Switches]** SW

This parameter can be accessed if **[Application Selection]** APPt is set to **[Level]** LEVEL.

Setting	Code / Value	Description
[Not Configured]	nO	Not assigned **Factory setting**
[AI1]...**[AI3]**	AI1...AI3	Analog input AI1...AI3
[AI4]...**[AI5]**	AI4...AI5	Analog input AI4...AI5 if VW3A3203 I/O extension module has been inserted
[AI Virtual 1]...**[AI Virtual 3]**	AIV1...AIV3	Virtual analogic input 1...3
NOTE: For sensor configuration, refer to section **[Sensors assignment]** *(see page 216)*.		

[Level control] LCC - Menu

Access

[Complete settings] ➡ [Pump functions] ➡ [Level control] ➡ [Level control]

About This Menu

This menu can be accessed if **[Pump System Archi]** PPSA is not set to **[No]** no.

Delivery Height Configuration

To work at optimal System Best Efficiency Point, it is needed to configure the static head of the system by configuring **[Min Delivery Height]** LCdJ and **[Max Delivery Height]** LCdK.

If these parameters are not configured, the system will work at Pump BEP instead of System BEP.

If only one of these parameters is configured, the other one will be calculated, taking into account the height estimation of the tank, based on sensor or tank configuration.

When the delivery height is constant whatever the tank level, the **[Min Delivery Height]** LCdJ and **[Max Delivery Height]** LCdK must be configured.

The following figure describe how to calculate the delivery heights in case of a filling process from source tank pumped from top to destination tank filled from bottom:

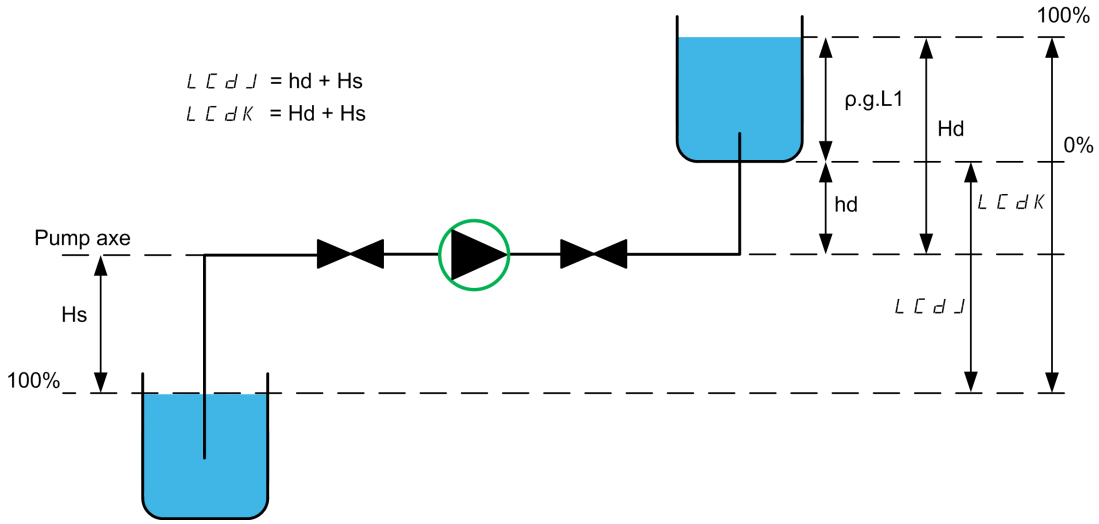

hd discharge height when destination tank is empty.
Hd discharge height when destination tank is full.
Hs suction height when source tank is full.

The following figure describe how to calculate the delivery heights in case of a filling process from source tank pumped from bottom to destination tank filled from bottom:

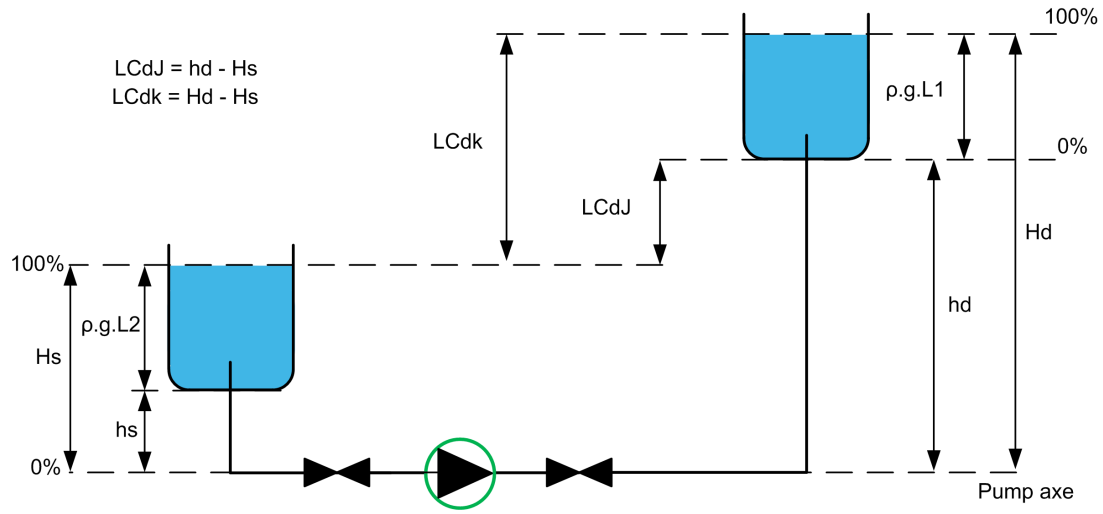

hd discharge height when destination tank is empty
Hd discharge height when destination tank is full.
hs suction height when source tank is empty.
Hs suction height when source tank is full.

The following figure describe how to calculate the delivery heights in case of a filling process from source tank pumped from top to destination tank filled from top:

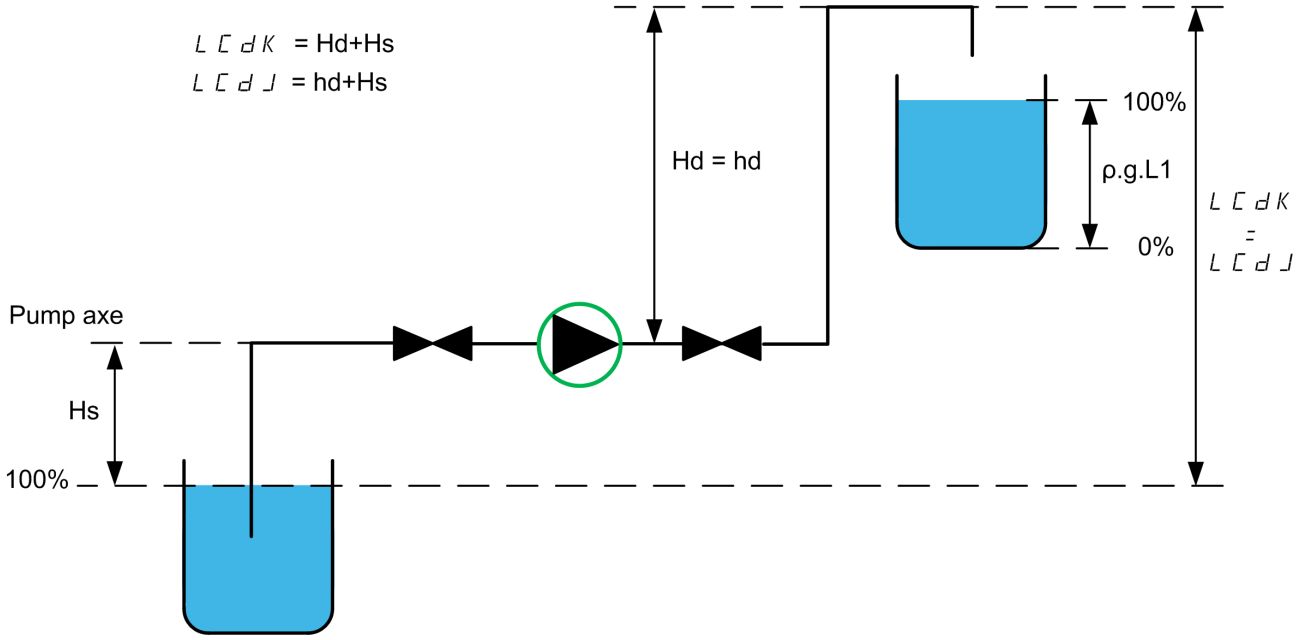

hd discharge height when destination tank is empty.
Hd discharge height when destination tank is full.
Hs suction height when source tank is full.

The following figure describes how to calculate the delivery heights in case of an emptying process:

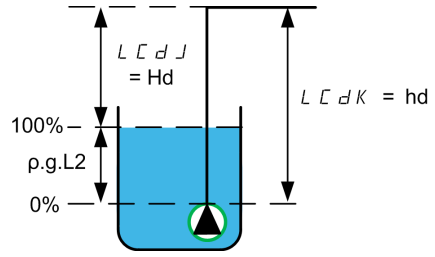

hd discharge height when destination tank is empty.
Hd discharge height when destination tank is full.

[Empty Tank Level] LCEJ ★

Empty tank level sensor value.

This parameter can be accessed if **[LevelCtrl Strategy]** LcSt is not set to **[Switches]** trAd.

Setting	Description
-32,767...32,767 m	Setting range in meter or in pressure value according to **[LevelCtrl Sensor Type]** LCnt **Factory setting**: 0.00 m

[Full Tank Level] LCEK ★

Full tank level sensor value.

This parameter can be accessed if **[LevelCtrl Strategy]** LcSt is not set to **[Switches]** trAd.

Setting	Description
-32,767...32,767 m	Setting range in meter or in pressure value according to **[LevelCtrl Sensor Type]** LCnt **Factory setting**: 0.00 m

[LevelCtrl Strategy] LCSt ★

Level control strategy.

This parameter can be accessed if **[LevelCtrl Mode]** LcM is not set to **[No]** no.

Setting	Code / Value	Description
[Switches]	trAd	Switches **Factory setting**
[Standard]	bAS ic	Standard
[Energy Optimized]	AdV	Energy optimized

[Inst. Flow Assign.] FSIA ★

Installation flow sensor assignment.

This parameter can be accessed if **[LevelCtrl Strategy]** LcSt is set to **[Energy Optimized]** Adu.

Setting	Code / Value	Description
[Not Configured]	no	Not assigned **Factory setting**
[AI1]...**[AI3]**	AI1...AI3	Analog input AI1...AI3
[AI4]...**[AI5]**	AI4...AI5	Analog input AI4...AI5 if VW3A3203 I/O extension module has been inserted
[AI Virtual 1]...**[AI Virtual 3]**	AIV1...AIV3	Virtual analogic input 1...3
[Di5 PulseInput Assignment]...**[Di6 PulseInput Assignment]**	PI5...PI6	Digital input DI5...DI6 used as pulse input
[Est. Pump Flow]	SLPF	Sensor less estimated flow
[Est. System Flow]	SLSF	Estimated system flow This selection is only possible if **[Pump System Archit]** MPSA is set to **[Multi Drives]** nvSd or **[Multi Masters]** nvSdr **NOTE:** To use this selection, all the pump characteristics of the system must be configured.
NOTE: For sensor configuration, refer to section **[Sensors assignment]** *(see page 216)*.		

[Tank Volume] LCEV ★

Tank volume to be filled or emptied.

This parameter can be accessed if **[LevelCtrl Strategy]** LcST is set to **[Energy Optimized]** Adu.

Setting	Description
0...32,767	Setting range according to **[Flow rate unit]** SuFr **Factory setting**: 0

[Min Delivery Height] LCdJ ★

Minimum delivery height.

This parameter can be accessed if **[LevelCtrl Strategy]** LcST is set to **[Energy Optimized]** Adu.

Setting	Description
0.00...327.67 m	Setting range according to **[Flow rate unit]** SuFr **Factory setting**: 0.00 m

[Max Delivery Height] LCdK ★

Maximum delivery height

This parameter can be accessed if **[LevelCtrl Strategy]** LcST is set to **[Energy Optimized]** Adu.

Setting	Description
[No] nO...327.67 m	Setting range according to **[Flow rate unit]** SuFr **Factory setting**: **[No]** nO

[LevelCtrl Low Speed] LCLS ★

Level control low speed.

This parameter can be accessed if **[LevelCtrl Strategy]** LcST is not set to **[Switches]** trAd.

Setting	Description
0.0...500.0 Hz	Setting range **Factory setting**: 35.0 Hz

[LevelCtrl Stop Mode] LCPM ★

Level control stop mode.

This parameter can be accessed if **[LevelCtrl Strategy]** LcST is set to **[Switches]** trAd.

Setting	Code / Value	Description
[Simultaneous Stop]	coMM	All pumps stopped simultaneously
[Individual Stop]	indiV	Each pump stopped individually **Factory setting**

[LevelCtrl Random Factor] LCrX ★

Level control random factor.

This parameter can be accessed if **[LevelCtrl Mode]** LcM is not set to **[No]** nO.

Setting	Description
0...100%	Setting range **Factory setting**: 0%

[Min Level Switch Assign] LCWL ★

Minimum level switch assignment.

This parameter can be accessed if **[LevelCtrl Mode]** LCN is not set to **[No]** nO.

Setting	Code / Value	Description
[Not Assigned]	nO	Not assigned **Factory setting**
[DI1]...**[DI6]**	LI1...LI6	Digital input DI1...DI6
[DI11]...**[DI16]**	LI11...LI16	Digital input DI11...DI16 if VW3A3203 I/O extension module has been inserted
[CD00]...**[CD10]**	CD00...CD10	Virtual digital input CMD.0...CMD.10 in **[I/O profile]** IO configuration
[CD11]...**[CD15]**	CD11...CD15	Virtual digital input CMD.11...CMD.15 regardless of configuration
[C101]...**[C110]**	C101...C110	Virtual digital input CMD1.01...CMD1.10 with integrated Modbus Serial in **[I/O profile]** IO configuration
[C111]...**[C115]**	C111...C115	Virtual digital input CMD1.11...CMD1.15 with integrated Modbus Serial regardless of configuration
[C201]...**[C210]**	C201...C210	Virtual digital input CMD2.01...CMD2.10 with CANopen® fieldbus module in **[I/O profile]** IO configuration
[C211]...**[C215]**	C211...C215	Virtual digital input CMD2.11...CMD2.15 with CANopen® fieldbus module regardless of configuration
[C301]...**[C310]**	C301...C310	Virtual digital input CMD3.01...CMD3.10 with a fieldbus module in **[I/O profile]** IO configuration
[C311]...**[C315]**	C311...C315	Virtual digital input CMD3.11...CMD3.15 with a fieldbus module regardless of configuration
[C501]...**[C510]**	C501...C510	Virtual digital input CMD5.01...CMD5.10 with integrated Ethernet in **[I/O profile]** IO configuration
[C511]...**[C515]**	C511...C515	Virtual digital input CMD5.11...CMD5.15 with integrated Ethernet regardless of configuration

[Max Level Switch Assign] LCWH ★

Maximum level switch assignment.

This parameter can be accessed if **[LevelCtrl Mode]** LCN is not set to **[No]** nO.

Setting	Code / Value	Description
[Not Assigned]	nO	Not assigned **Factory setting**
[DI1]...**[DI6]**	LI1...LI6	Digital input DI1...DI6
[DI11]...**[DI16]**	LI11...LI16	Digital input DI11...DI16 if VW3A3203 I/O extension module has been inserted
[CD00]...**[CD10]**	CD00...CD10	Virtual digital input CMD.0...CMD.10 in **[I/O profile]** IO configuration
[CD11]...**[CD15]**	CD11...CD15	Virtual digital input CMD.11...CMD.15 regardless of configuration
[C101]...**[C110]**	C101...C110	Virtual digital input CMD1.01...CMD1.10 with integrated Modbus Serial in **[I/O profile]** IO configuration
[C111]...**[C115]**	C111...C115	Virtual digital input CMD1.11...CMD1.15 with integrated Modbus Serial regardless of configuration
[C201]...**[C210]**	C201...C210	Virtual digital input CMD2.01...CMD2.10 with CANopen® fieldbus module in **[I/O profile]** IO configuration
[C211]...**[C215]**	C211...C215	Virtual digital input CMD2.11...CMD2.15 with CANopen® fieldbus module regardless of configuration
[C301]...**[C310]**	C301...C310	Virtual digital input CMD3.01...CMD3.10 with a fieldbus module in **[I/O profile]** IO configuration
[C311]...**[C315]**	C311...C315	Virtual digital input CMD3.11...CMD3.15 with a fieldbus module regardless of configuration
[C501]...**[C510]**	C501...C510	Virtual digital input CMD5.01...CMD5.10 with integrated Ethernet in **[I/O profile]** IO configuration

Setting	Code / Value	Description
[C511]...**[C515]**	C511...C515	Virtual digital input CMD5.11...CMD5.15 with integrated Ethernet regardless of configuration

[LevelCtrl Error Resp] LCFb ★

Level control error response.

This parameter can be accessed if **[LevelCtrl Mode]** LcM is not set to **[No]** no.

Setting	Code / Value	Description
[Ignore]	no	Detected error ignored
[Freewheel Stop]	YES	Freewheel stop
[Per STT]	Stt	Stop according to **[Type of stop]** Stt parameter but without an error triggered after stop
[Ramp stop]	rMP	Stop on ramp **Factory setting**

[Disturb Flow Comp] LC9G ★

Disturbance flow compensation.

This parameter can be accessed if **[LevelCtrl Strategy]** LCSt is set to **[Energy Optimized]** AdV.

Setting	Description
0...200%	Setting range **Factory setting**: 100%
NOTE: If the parameter is set below 100%, the priority is given to energy optimization compare to flow compensation.	

[Disturb Flow Resp Time] LC9t ★

Disturbance flow response time.

This parameter can be accessed if **[LevelCtrl Strategy]** LCSt is set to **[Energy Optimized]** AdV.

Setting	Description
0.0...10.00 s	Setting range **Factory setting**: 1.00 s

[LevelCtrl S/D Interval] LCdt ★

Level Control stage/destage interval

Time before taking into account a new stage/de-stage of pump.

This parameter can be accessed if **[LevelCtrl Strategy]** LCSt is set to **[Energy Optimized]** AdV.

Setting	Description
0.0...999.9 s	Setting range **Factory setting**: 15 s

[Level settings] LcL - Menu

Access

[Complete settings] ➡ **[Pump functions]** ➡ **[Level control]** ➡ **[Level settings]**

About This Menu

According to the configured **[LevelCtrl Strategy]** LCSt , it is necessary to assign:

- Digital inputs for the level switches, in case of **[Switches]** trAd has been selected.
- Levels in % for the next pump to start, for next pump to stop, and for the pump at high speed, in case of **[Standard]** bAS iC or **[Energy Optimized]** Adu level control strategy has been selected.

[Level Switch1 Assign] LcW1 ★

Level switch 1 assignment.

This parameter can be accessed if:

- **[LevelCtrl Strategy]** LCSt is set to **[Switches]** trAd, and
- **[Nb Of Pumps]** nPPn is higher than 0.

Setting	Code / Value	Description
[Not Assigned]	no	Not assigned **Factory setting**
[DI1]...**[DI6]**	LI1...LI6	Digital input DI1...DI6
[DI11]...**[DI16]**	LI11...LI16	Digital input DI11...DI16 if VW3A3203 I/O extension module has been inserted
[CD00]...**[CD10]**	Cd00...Cd10	Virtual digital input CMD.0...CMD.10 in **[I/O profile]** io configuration
[CD11]...**[CD15]**	Cd11...Cd15	Virtual digital input CMD.11...CMD.15 regardless of configuration
[C101]...**[C110]**	C101...C110	Virtual digital input CMD1.01...CMD1.10 with integrated Modbus Serial in **[I/O profile]** io configuration
[C111]...**[C115]**	C111...C115	Virtual digital input CMD1.11...CMD1.15 with integrated Modbus Serial regardless of configuration
[C201]...**[C210]**	C201...C210	Virtual digital input CMD2.01...CMD2.10 with CANopen® fieldbus module in **[I/O profile]** io configuration
[C211]...**[C215]**	C211...C215	Virtual digital input CMD2.11...CMD2.15 with CANopen® fieldbus module regardless of configuration
[C301]...**[C310]**	C301...C310	Virtual digital input CMD3.01...CMD3.10 with a fieldbus module in **[I/O profile]** io configuration
[C311]...**[C315]**	C311...C315	Virtual digital input CMD3.11...CMD3.15 with a fieldbus module regardless of configuration
[C501]...**[C510]**	C501...C510	Virtual digital input CMD5.01...CMD5.10 with integrated Ethernet in **[I/O profile]** io configuration
[C511]...**[C515]**	C511...C515	Virtual digital input CMD5.11...CMD5.15 with integrated Ethernet regardless of configuration

[Level Switch2 Assign] LcW2 ★

Level switch 2 assignment.

This parameter can be accessed if:

- **[LevelCtrl Strategy]** LCSt is set to **[Switches]** trAd, and
- **[Nb Of Pumps]** nPPn is higher than 1.

Identical to **[Level Switch1 Assign]** LcW1 *(see page 298)*.

[Level Switch3 Assign] LcW3 ★

Level switch 3 assignment.

This parameter can be accessed if:
- **[LevelCtrl Strategy]** LCSt is set to **[Switches]** trAd, and
- **[Nb Of Pumps]** nPPn is higher than 2.

Identical to **[Level Switch1 Assign]** LcW1 *(see page 298)*.

[Level Switch4 Assign] LcW4 ★

Level switch 4 assignment.

This parameter can be accessed if:
- **[LevelCtrl Strategy]** LCSt is set to **[Switches]** trAd, and
- **[Nb Of Pumps]** nPPn is higher than 3.

Identical to **[Level Switch1 Assign]** LcW1 *(see page 298)*.

[Level Switch5 Assign] LcW5 ★

Level switch 5 assignment.

This parameter can be accessed if:
- **[LevelCtrl Strategy]** LCSt is set to **[Switches]** trAd, and
- **[Nb Of Pumps]** nPPn is higher than 4.

Identical to **[Level Switch1 Assign]** LcW1 *(see page 298)*.

[Level Switch6 Assign] LcW6 ★

Level switch 6 assignment.

This parameter can be accessed if:
- **[LevelCtrl Strategy]** LCSt is set to **[Switches]** trAd, and
- **[Nb Of Pumps]** nPPn is higher than 5.

Identical to **[Level Switch1 Assign]** LcW1 *(see page 298)*.

[Level 1st Pump Start] LrL1 ★

Level to start first pump.

This parameter can be accessed if:
- **[LevelCtrl Strategy]** LCSt is not set to **[Switches]** trAd, and
- **[Nb Of Pumps]** nPPn is higher than 0.

Setting	Description
0...100%	Setting range **Factory setting**: 0%

[Level 1st Pump Stop] LPL1 ★

Level to stop first pump.

This parameter can be accessed if:
- **[LevelCtrl Strategy]** LCSt is not set to **[Switches]** trAd, and
- **[Nb Of Pumps]** nPPn is higher than 0.

Setting	Description
0...100%	Setting range **Factory setting**: 0%

[Level 1st Pump at HSP] LhL1 ★

Level to reach first pump high speed.

This parameter can be accessed if:
- **[LevelCtrl Strategy]** LCSt is not set to **[Switches]** trAd, and
- **[Nb Of Pumps]** nPPn is higher than 0.

Setting ↻	Description
0...100%	Setting range **Factory setting**: 0%

[Level 2nd Pump Start] LrL2 ★

Level to start second pump.

This parameter can be accessed if:
- **[LevelCtrl Strategy]** LCSt is not set to **[Switches]** trAd or **[Energy Optimized]** AdV, and
- **[Nb Of Pumps]** nPPn is higher than 1.

Identical to **[Level 1st Pump Start]** LrL1 *(see page 299)*.

[Level 2nd Pump Stop] LPL2 ★

Level to stop second pump.

This parameter can be accessed if:
- **[LevelCtrl Strategy]** LCSt is not set to **[Switches]** trAd or **[Energy Optimized]** AdV, and
- **[Nb Of Pumps]** nPPn is higher than 1.

Identical to **[Level 1st Pump Start]** LrL1 *(see page 299)*.

[Level 2nd Pump at HSP] LhL2 ★

Level to reach second pump high speed.

This parameter can be accessed if:
- **[LevelCtrl Strategy]** LCSt is not set to **[Switches]** trAd or **[Energy Optimized]** AdV, and
- **[Nb Of Pumps]** nPPn is higher than 1.

Identical to **[Level 1st Pump Start]** LrL1 *(see page 300)*.

[Level 3rd Pump Start] LrL3 ★

Level to start third pump.

This parameter can be accessed if:
- **[LevelCtrl Strategy]** LCSt is not set to **[Switches]** trAd or **[Energy Optimized]** AdV, and
- **[Nb Of Pumps]** nPPn is higher than 2.

Identical to **[Level 1st Pump Start]** LrL1 *(see page 299)*.

[Level 3rd Pump Stop] LPL3 ★

Level to stop third pump.

This parameter can be accessed if:
- **[LevelCtrl Strategy]** LCSt is not set to **[Switches]** trAd or **[Energy Optimized]** AdV, and
- **[Nb Of Pumps]** nPPn is higher than 2.

Identical to **[Level 1st Pump Start]** LrL1 *(see page 299)*.

[Level 3rd Pump at HSP] LHL3 ★

Level to reach third pump high speed.

This parameter can be accessed if:
- **[LevelCtrl Strategy]** LCSt is not set to **[Switches]** trAd or **[Energy Optimized]** AdV, and
- **[Nb Of Pumps]** nPPn is higher than 2.

Identical to **[Level 1st Pump Start]** LrL1 *(see page 300)*.

[Level 4th Pump Start] LrL4 ★

Level to start fourth pump.

This parameter can be accessed if:
- **[LevelCtrl Strategy]** LCSt is not set to **[Switches]** trAd or **[Energy Optimized]** AdV, and
- **[Nb Of Pumps]** nPPn is higher than 3.

Identical to **[Level 1st Pump Start]** LrL1 *(see page 299)*.

[Level 4th Pump Stop] LPL4 ★

Level to stop fourth pump.

This parameter can be accessed if:
- **[LevelCtrl Strategy]** LCSt is not set to **[Switches]** trAd or **[Energy Optimized]** AdV, and
- **[Nb Of Pumps]** nPPn is higher than 3.

Identical to **[Level 1st Pump Start]** LrL1 *(see page 299)*.

[Level 4th Pump at HSP] LHL4 ★

Level to reach fourth pump high speed.

This parameter can be accessed if:
- **[LevelCtrl Strategy]** LCSt is not set to **[Switches]** trAd or **[Energy Optimized]** AdV, and
- **[Nb Of Pumps]** nPPn is higher than 3.

Identical to **[Level 1st Pump Start]** LrL1 *(see page 300)*.

[Level 5th Pump Start] LrL5 ★

Level to start fifth pump.

This parameter can be accessed if:
- **[LevelCtrl Strategy]** LCSt is not set to **[Switches]** trAd or **[Energy Optimized]** AdV, and
- **[Nb Of Pumps]** nPPn is higher than 4.

Identical to **[Level 1st Pump Start]** LrL1 *(see page 299)*.

[Level 5th Pump Stop] LPL5 ★

Level to stop fifth pump.

This parameter can be accessed if:
- **[LevelCtrl Strategy]** LCSt is not set to **[Switches]** trAd or **[Energy Optimized]** AdV, and
- **[Nb Of Pumps]** nPPn is higher than 4.

Identical to **[Level 1st Pump Start]** LrL1 *(see page 299)*.

[Level 5th Pump at HSP] LHL5 ★

Level to reach fifth pump high speed.

This parameter can be accessed if:
- **[LevelCtrl Strategy]** LCSt is not set to **[Switches]** trAd or **[Energy Optimized]** AdV, and
- **[Nb Of Pumps]** nPPn is higher than 4.

Identical to **[Level 1st Pump Start]** LrL1 *(see page 300)*.

[Level 6th Pump Start] LrL6 ★

Level to start sixth pump.

This parameter can be accessed if:
- **[LevelCtrl Strategy]** LCSt is not set to **[Switches]** trAd or **[Energy Optimized]** AdV, and
- **[Nb Of Pumps]** nPPn is higher than 5.

Identical to **[Level 1st Pump Start]** LrL1 *(see page 299)*.

[Level 6th Pump Stop] LPL6 ★

Level to stop sixth pump.

This parameter can be accessed if:
- **[LevelCtrl Strategy]** LCSt is not set to **[Switches]** trAd or **[Energy Optimized]** AdV, and
- **[Nb Of Pumps]** nPPn is higher than 5.

Identical to **[Level 1st Pump Start]** LrL1 *(see page 299)*.

[Level 6th Pump at HSP] LhL6 ★

Level to reach sixth pump high speed.

This parameter can be accessed if:
- **[LevelCtrl Strategy]** LCSt is not set to **[Switches]** trAd or **[Energy Optimized]** AdV, and
- **[Nb Of Pumps]** nPPn is higher than 5.

Identical to **[Level 1st Pump Start]** LrL1 *(see page 300)*.

Section 8.9
[Pump functions] - [PID controller]

What Is in This Section?

This section contains the following topics:

Topic	Page
[PID controller] P id - Overview	304
[PID Feedback] FdbA - Menu	308
[PID Reference] rFC - Menu	315
[PID preset references] Pr1 - Menu	317
[PID Reference] rFC - Menu	319
[Settings] SEt - Menu	320

[PID controller] P id - Overview

About This Menu

NOTE: This function cannot be used with some other functions.

Block Diagram

The function is activated by assigning an analog input to the PID feedback (measurement).

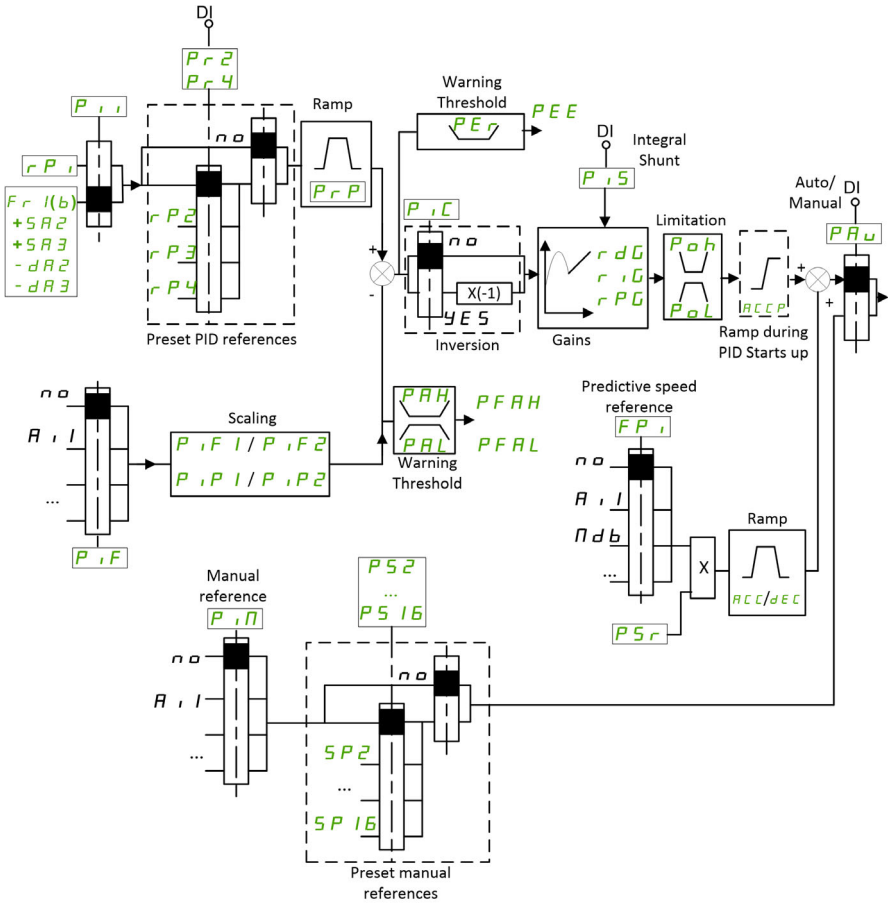

The PID feedback needs to be assigned to one of the analog inputs AI1 to AI5 or a pulse input, according to whether any I/O extension module has been inserted.

The PID reference needs to be assigned to the following parameters:

- Preset references via digital inputs (**[Ref PID Preset 2]** rP2, **[Ref PID Preset 3]** rP3, **[Ref PID Preset 4]** rP4).
- In accordance with the configuration of **[Intern PID Ref]** PI1:
  - **[Internal PID ref]** rPI, or
  - Reference A **[Ref Freq 1 Config]** Fr1 or **[Ref.1B channel]** Fr1b.

Combination Table for Preset PID References:

DI (Pr 4)	DI (Pr 2)	Pr 2 = no	Reference
			rP 1 or Fr 1(b)
0	0		rP 1 or Fr 1(b)
0	1		rP 2
1	0		rP 3
1	1		rP 4

A predictive speed reference can be used to initialize the speed on restarting the process.

Scaling of feedback and references:

- **[Min PID feedback]** P 1F 1, **[Max PID feedback]** P 1F 2 parameters can be used to scale the PID feedback (sensor range). This scale must be maintained for all other parameters.
- **[Min PID Process]** P 1P 1, **[Max PID Process]** P 1P 2 parameters can be used to scale the adjustment range, for example the reference. **Check that the adjustment range remains within the sensor range.**

The maximum value of the scaling parameters is 32,767. To facilitate the installation, it is recommended to use values as close as possible to this maximum level, while retaining powers of 10 in relation to the actual values. The scaling is without unit if **[Type of control]** tOCt is set to **[NA]** nA, in % if set to **[OTHER]** otHEr, in process unit if set to **[PRESSURE]** PrESS or **[FLOW]** FLOW.

Example

Adjustment of the volume in a tank, 6...15 m3.

- Probe used 4-20 mA, 4.5 m^3 for 4 mA and 20 m^3 for 20 mA, with the result that P 1F 1 = 4,500 and P 1F 2 = 20,000.
- Adjustment range 6 to 15 m^3, with the result that P 1P 1 = 6,000 (min. reference) and P 1P 2 = 15,000 (max. reference).
- Example references:
  - rP 1 (internal reference) = 9,500
  - rP 2 (preset reference) = 6,500
  - rP 3 (preset reference) = 8,000
  - rP 4 (preset reference) = 11,200

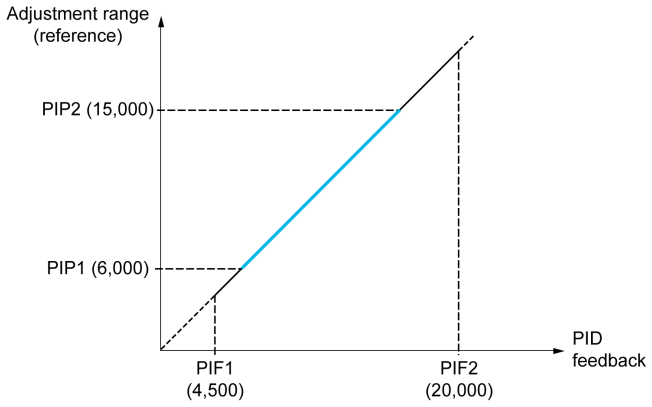

Other parameters:

- Reversal of the direction of correction **[PID Inversion]** P 1C. If **[PID Inversion]** P 1C is set to **[No]** no, the speed of the motor increases when the detected error is positive (for example pressure control with a compressor). If **[PID Inversion]** P 1C is set to **[Yes]** YES, the speed of the motor decreases when the detected error is positive (for example temperature control using a cooling fan).
- The integral gain may be short-circuited by a digital input.
- A warning on the **[PID feedback Assign]** P 1F may be configured.
- A warning on the **[PID error]** rPE may be configured.

"Manual - Automatic" Operation with PID

This function combines the PID controller, the preset speeds, and a manual reference. Depending on the state of the digital input, the speed reference is given by the preset speeds or by a manual reference input via the PID function.

Manual PID reference **[Manual PID reference]** *P I M*:

- Analog inputs AI1 to AI5
- Pulse inputs

Predictive speed reference **[Predictive Speed Ref]** *F P I*:

- **[AI1]** *A I 1*: analog input
- **[AI2]** *A I 2*: analog input
- **[AI3]** *A I 3*: analog input
- **[AI4]** *A I 4*: analog input if VW3A3203 I/O extension module has been inserted
- **[AI5]** *A I 5*: analog input if VW3A3203 I/O extension module has been inserted
- **[DI5 PulseInput Assignment]** *P I 5*: pulse input
- **[DI6 PulseInput Assignment]** *P I 6*: pulse input
- **[Ref.Freq-Rmt.Term]** *L C C*: Graphic Display Terminal
- **[Modbus]** *M d b*: integrated Modbus
- **[CANopen]** *C A n*: CANopen® (if inserted)
- **[Com. Module]** *n E t*: fieldbus option module (if inserted)
- **[Embedded Ethernet]** *E t H*: integrated Ethernet

Setting Up the PID Controller

1. Configuration in PID mode.

Refer to the Block Diagram *(see page 304)*.

2. Perform a test in factory settings mode.

To optimize the drive, adjust **[PID Prop.Gain]** *r P G* or **[PID Intgl.Gain]** *r I G* gradually and independently, and observe the effect on the PID feedback in relation to the reference.

3. If the factory settings are unstable or the reference is incorrect.

Step	Action
1	Perform a test with a speed reference in Manual mode (without PID controller) and with the drive on load for the speed range of the system: ● In steady state, the speed must be stable and comply with the reference, and the PID feedback signal must be stable. ● In transient state, the speed must follow the ramp and stabilize quickly, and the PID feedback must follow the speed. If not, see the settings for the drive and/or sensor signal and wiring.
2	Switch to PID mode.
3	Set **[PID ramp]** *P r P* to the minimum permitted by the mechanism without triggering an **[DC Bus Overvoltage]** *o b F*.
4	Set the integral gain **[PID Intgl.Gain]** *r I G* to minimum.
5	Leave the derivative gain **[PID derivative gain]** *r d G* at 0.
6	Observe the PID feedback and the reference.
7	Switch the drive ON/OFF a number of times or vary the load or reference rapidly a number of times.
8	Set the proportional gain **[PID Prop.Gain]** *r P G* in order to ascertain the compromise between response time and stability in transient phases (slight overshoot and 1 to 2 oscillations before stabilizing).
9	If the reference varies from the preset value in steady state, gradually increase the integral gain **[PID Intgl.Gain]** *r I G*, reduce the proportional gain **[PID Prop.Gain]** *r P G* in the event of instability (pump applications), find a compromise between response time and static precision (see diagram).
10	Lastly, the derivative gain may permit the overshoot to be reduced and the response time to be improved, although this is more difficult to obtain a compromise in terms of stability, as it depends on 3 gains.
11	Perform in-production tests over the whole reference range.

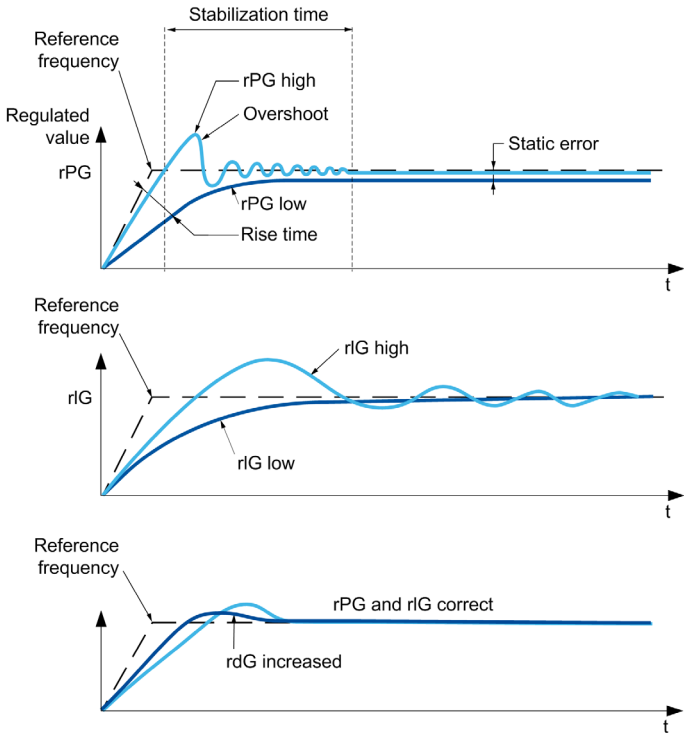

The oscillation frequency depends on the system kinematics:

Parameter	Rise time	Overshoot	Stabilization time	Static error
rPG +	- -	+	=	-
rIG +	-	+ +	+	- -
rdG +	=	-	-	=

[PID Feedback] FdB - Menu

Access

[Complete settings] ➡ [Pump functions] ➡ [PID controller] ➡ [PID Feedback]

About This Menu

NOTE: This function cannot be used with some other functions.

[Type of Control] tOCt

Type of control for the PID = unit choice.

Setting	Code / Value	Description
[nA]	nA	(without unit) **Factory setting**
[Pressure]	PrESS	Pressure control and unit
[Flow]	FLOW	Flow control and unit
[Other]	OtHEr	Other control and unit (%)

[PID feedback Assign] PIF

PID controller feedback.

Setting	Code / Value	Description
[No]	no	Not assigned **Factory setting**
[AI1]...[AI3]	AI1...AI3	Analog input AI1...AI3
[AI4]...[AI5]	AI4...AI5	Analog input AI4...AI5 if VW3A3203 I/O extension module has been inserted
[AI Virtual 1]...[AI Virtual 3]	AIV1...AIV3	Virtual analogic input 1...3
[PulseInput Assignment On DI5]...[PulseInput Assignment On DI6]	PI5...PI6	Digital input DI5...DI6 used as pulse input

[AI1 Type] AI1t ★

Configuration of analog input AI1.

This parameter can be accessed if **[PID feedback Assign]** PIF is set to **[AI1]** AI1.

Setting	Code / Value	Description
[Voltage]	10U	0-10 Vdc **Factory setting**
[Current]	0A	0-20 mA
[PTC Management]	PtC	1 to 6 PTC (in serial)
[KTY]	KtY	1 KTY84
[PT100]	1Pt2	1 PT100 connected with 2 wires
[PT1000]	1Pt3	1 PT1000 connected with 2 wires

[AI1 min value] uIL1 ★

AI1 voltage scaling parameter of 0%.

This parameter can be accessed if:
- **[PID feedback Assign]** PIF is set to **[AI1]** AI1, and
- **[AI1 Type]** AI1t is set to **[Voltage]** 10u.

Setting	Description
0.0...10.0 Vdc	Setting range **Factory setting**: 0.0 Vdc

[AI1 max value] uIH1 ★

AI1 voltage scaling parameter of 100%.

This parameter can be accessed if:
- **[PID feedback Assign]** PIF is set to **[AI1]** AI1, and
- **[AI1 Type]** AI1t is set to **[Voltage]** 10u.

Setting	Description
0.0...10.0 Vdc	Setting range **Factory setting**: 10.0 Vdc

[AI1 min. value] CrL1 ★

AI1 current scaling parameter of 0%.

This parameter can be accessed if:
- **[PID feedback Assign]** PIF is set to **[AI1]** AI1, and
- **[AI1 Type]** AI1t is set to **[Current]** 0A.

Setting	Description
0.0...20.0 mA	Setting range **Factory setting**: 0.0 mA

[AI1 max. value] CrH1 ★

AI1 current scaling parameter of 100%.

This parameter can be accessed if:
- **[PID feedback Assign]** PIF is set to **[AI1]** AI1, and
- **[AI1 Type]** AI1t is set to **[Current]** 0A.

Setting	Description
0.0...20.0 mA	Setting range **Factory setting**: 20.0 mA

[AI1 range] A I L ★

AI1 scaling selection.

This parameter can be accessed if:
- **[PID feedback Assign]** P I F is set to **[AI1]** A I 2 1, and
- **[AI1 Type]** A I 1 t is set to **[Current]** o A.

This parameter is forced to **[0-100%]** P o S if:
- **[AI1 Type]** A I 1 t is no set to **[Current]** o A, or
- **[AI1 min. value]** C r L 1 is lower than 3.0 mA.

Setting	Code / Value	Description
[0-100%]	P o S	Unidirectional: AI1 current scaling is 0% up to 100%. **Factory setting**
[-/+100%]	P o S n E G	Bidirectional: AI1 current scaling is -100% up to 100%. **[AI1 min. value]** C r L 1 corresponds to -100%. **[AI1 max. value]** C r H 1 corresponds to 100%.

[AI2 Type] A I 2 t ★

Configuration of analog input AI2.

This parameter can be accessed if **[PID feedback Assign]** P I F is set to **[AI2]** A I 2.

Setting	Code / Value	Description
[Voltage]	10 u	0-10 Vdc **Factory setting**
[Current]	0 A	0-20 mA
[PTC Management]	P t C	1 to 6 PTC (in serial)
[KTY]	K t Y	1 KTY84
[PT1000]	1 P t 3	1 PT1000 connected with 2 wires
[PT100]	1 P t 2	1 PT100 connected with 2 wires
[Water Prob]	L E u E L	Water level
[3PT1000]	3 P t 3	3 PT1000 connected with 2 wires
[3PT100]	3 P t 2	3 PT100 connected with 2 wires

[AI2 min value] u I L 2 ★

AI2 voltage scaling parameter of 0%.

This parameter can be accessed if:
- **[PID feedback Assign]** P I F is set to **[AI2]** A I 2, and
- **[AI2 Type]** A I 2 t is set to **[Voltage]** 10 u.

Identical to **[AI1 min value]** u I L 1 *(see page 309)*.

[AI2 max value] u I H 2 ★

AI2 voltage scaling parameter of 100%.

This parameter can be accessed if:
- **[PID feedback Assign]** P I F is set to **[AI2]** A I 2, and
- **[AI2 Type]** A I 2 t is set to **[Voltage]** 10 u.

Identical to **[AI1 max value]** u I H 1 *(see page 309)*.

[AI2 min. value] C r L 2 ★

AI2 current scaling parameter of 0%.

This parameter can be accessed if:
- **[PID feedback Assign]** P I F is set to **[AI2]** A I 2, and
- **[AI2 Type]** A I 2 t is not set to **[Current]** 0 A.

Identical to **[AI1 min. value]** C r L 1 *(see page 309)*.

[AI2 max. value] CrH2 ★

AI2 current scaling parameter of 100%.

This parameter can be accessed if:
- **[PID feedback Assign]** PiF is set to **[AI2]** Ai2, and
- **[AI2 Type]** Ai2t is not set to **[Current]** 0A.

Identical to **[AI1 max. value]** CrH1 *(see page 309)*.

[AI2 range] Ai2L

AI2 scaling selection.

This parameter can be accessed if :
- **[PID feedback Assign]** PiF is set to **[AI2]** Ai2, and
- **[AI2 Type]** Ai2t is set to **[Current]** 0A.

Identical to **[AI1 range]** Ai1L *(see page 220)*.

[AI3 Type] Ai3t ★

Configuration of analog input AI3.

This parameter can be accessed if **[PID feedback Assign]** PiF is set to **[AI3]** Ai3.

Identical to **[AI1 Type]** Ai1t with factory setting: **[Current]** 0A *(see page 310)*.

[AI3 min value] uiL3 ★

AI3 voltage scaling parameter of 0%.

This parameter can be accessed if:
- **[PID feedback Assign]** PiF is set to **[AI3]** Ai3, and
- **[AI3 Type]** Ai3t is set to **[Voltage]** 10u.

Identical to **[AI1 min value]** uiL1 *(see page 309)*.

[AI3 max value] uiH3 ★

AI3 voltage scaling parameter of 100%.

This parameter can be accessed if:
- **[PID feedback Assign]** PiF is set to **[AI3]** Ai3, and
- **[AI3 Type]** Ai3t is set to **[Voltage]** 10u.

Identical to **[AI1 max value]** uiH1 *(see page 309)*.

[AI3 min. value] CrL3 ★

AI3 current scaling parameter of 0%.

This parameter can be accessed if:
- **[PID feedback Assign]** PiF is set to **[AI3]** Ai3, and
- **[AI3 Type]** Ai3t is set to **[Current]** 0A.

Identical to **[AI1 min. value]** CrL1 *(see page 309)*.

[AI3 max. value] CrH3 ★

AI3 current scaling parameter of 100%.

This parameter can be accessed if:
- **[PID feedback Assign]** PiF is set to **[AI3]** Ai3, and
- **[AI3 Type]** Ai3t is set to **[Current]** 0A.

Identical to **[AI1 max. value]** CrH1 *(see page 309)*.

[AI3 range] A I 3 L

AI3 scaling selection.

This parameter can be accessed if :
- **[PID feedback Assign]** P I F is set to **[AI3]** A I 3, and
- **[AI3 Type]** A I 3 t is set to **[Current]** 0 A.

Identical to **[AI1 range]** A I I L *(see page 220)*.

[AI4 Type] A I 4 t ★

Configuration of analog input AI4.

This parameter can be accessed if:
- VW3A3203 I/O extension module has been inserted, and
- **[PID feedback Assign]** P I F is set to **[AI4]** A I 4.

Setting	Code / Value	Description
[Voltage]	10u	0-10 Vdc
[Current]	0A	0-20 mA
[Voltage +/-]	n 10u	-10/+10 Vdc **Factory setting**

[AI4 min value] u I L 4 ★

AI4 voltage scaling parameter of 0%.

This parameter can be accessed if:
- **[PID feedback Assign]** P I F is set to **[AI4]** A I 4, and
- **[AI4 Type]** A I 4 t is set to **[Voltage]** 10u.

Identical to **[AI1 min value]** u I L I *(see page 309)*.

[AI4 max value] u I H 4 ★

AI4 voltage scaling parameter of 100%.

This parameter can be accessed if:
- **[PID feedback Assign]** P I F is set to **[AI4]** A I 4, and
- **[AI4 Type]** A I 4 t is set to **[Voltage]** 10u.

Identical to **[AI1 max value]** u I H I *(see page 309)*.

[AI4 min. value] C r L 4 ★

AI4 current scaling parameter of 0%.

This parameter can be accessed if:
- **[PID feedback Assign]** P I F is set to **[AI4]** A I 4, and
- **[AI4 Type]** A I 4 t is set to **[Current]** 0 A.

Identical to **[AI1 min. value]** C r L I *(see page 309)*.

[AI4 max. value] C r H 4 ★

AI4 current scaling parameter of 100%.

This parameter can be accessed if:
- **[PID feedback Assign]** P I F is set to **[AI4]** A I 4, and
- **[AI4 Type]** A I 4 t is not set to **[Current]** 0 A.

Identical to **[AI1 max. value]** C r H I *(see page 309)*.

[AI4 range] A I 4 L

AI4 scaling selection.

This parameter can be accessed if :
- **[PID feedback Assign]** P I F is set to **[AI4]** A I 4, and
- **[AI4 Type]** A I 4 t is set to **[Current]** 0 A.

Identical to **[AI1 range]** A I 1 L *(see page 220)*.

[AI5 Type] A I 5 t ★

Configuration of analog input AI5.

This parameter can be accessed if:
- VW3A3203 I/O extension module has been inserted, and
- **[PID feedback Assign]** P I F is set to **[AI5]** A I 5.

Identical to **[AI4 Type]** A I 4 t *(see page 312)*.

[AI5 min value] u I L 5 ★

AI5 voltage scaling parameter of 0%.

This parameter can be accessed if:
- **[PID feedback Assign]** P I F is set to **[AI5]** A I 5, and
- **[AI5 Type]** A I 5 t is set to **[Voltage]** 1 0 u.

Identical to **[AI1 min value]** u I L 1 *(see page 309)*.

[AI5 max value] u I H 5 ★

AI5 voltage scaling parameter of 100%.

This parameter can be accessed if:
- **[PID feedback Assign]** P I F is set to **[AI5]** A I 5, and
- **[AI5 Type]** A I 5 t is set to **[Voltage]** 1 0 u.

Identical to **[AI1 max value]** u I H 1 *(see page 309)*.

[AI5 min. value] C r L 5 ★

AI5 current scaling parameter of 0%.

This parameter can be accessed if:
- **[PID feedback Assign]** P I F is set to **[AI5]** A I 5, and
- **[AI5 Type]** A I 5 t is set to **[Current]** 0 A.

Identical to **[AI1 min. value]** C r L 1 *(see page 309)*.

[AI5 max. value] C r H 5 ★

AI5 current scaling parameter of 100%.

This parameter can be accessed if:
- **[PID feedback Assign]** P I F is set to **[AI5]** A I 5, and
- **[AI5 Type]** A I 5 t is set to **[Current]** 0 A.

Identical to **[AI1 max. value]** C r H 1 *(see page 309)*.

[AI5 range] A I 5 L

AI5 scaling selection.

This parameter can be accessed if :
- **[PID feedback Assign]** P I F is set to **[AI5]** A I 5, and
- **[AI5 Type]** A I 5 t is set to **[Current]** 0 A.

Identical to **[AI1 range]** A I 1 L *(see page 220)*.

[Min PID feedback] P I F 1 ★

Minimum PID feedback.

This parameter can be accessed if **[PID feedback Assign]** P I F is not set to **[No]** n o.

Setting	Description
0...**[Max PID feedback]** P I F 2	Setting range **Factory setting**: 100

[Max PID feedback] P I F 2 ★

Maximum PID feedback.

This parameter can be accessed if **[PID feedback Assign]** P I F is not set to **[No]** n o.

Setting	Description
[Min PID feedback] P I F 1...32,767	Setting range **Factory setting**: 1,000

[PID feedback] r P F ★

Value for PID feedback, display only.

This parameter can be accessed if **[PID feedback Assign]** P I F is not set to **[No]** n o.

Setting	Description
0...65,535	Setting range **Factory setting**: _

[Min Fbk Warning] P A L ★

Minimum feedback level warning.

This parameter can be accessed if **[PID feedback Assign]** P I F is not set to **[No]** n o. **[PID Low Fdbck Warning]** P F A L warning is active if the value of the PID feedback is lower than the value configured in **[Min Fbk Warning]** P A L.

Setting	Description
0...65,535	Setting range **Factory setting**: 100

[Max Fbk Warning] P A H ★

Maximum feedback level warning.

This parameter can be accessed if **[PID feedback Assign]** P I F is not set to **[No]** n o. **[PID High Fdbck Warning]** P F A H warning is active if the value of the PID feedback is greater than the value configured in **[Max Fbk Warning]** P A H.

Setting	Description
0...65,535	Setting range **Factory setting**: 1,000

[PID Reference] rF - Menu

Access

[Complete settings] ➡ **[Pump functions]** ➡ **[PID controller]** ➡ **[PID Reference]**

About This Menu

NOTE: This function cannot be used with some other functions.

[Intern PID Ref] Pii ★

Internal PID controller reference.

This parameter can be accessed if **[PID feedback Assign]** PiF is not set to **[Not Configured]** nO.

Setting	Code / Value	Description
[No]	nO	The PID controller reference is given by **[Ref Freq 1 Config]** Fr1 or **[Ref.1B channel]** Fr1b with summing/subtraction/multiplication functions. Refer to the block diagram *(see page 304)*. **Factory setting**
[Yes]	YES	The PID controller reference is internal via **[Internal PID ref]** rPi.

[Ref Freq 1 Config] Fr1 ★

Configuration reference frequency 1.

This parameter can be accessed if:

- **[PID feedback Assign]** PiF is not set to **[Not Configured]** nO, and
- **[Intern PID Ref]** Pii is set to **[No]** nO.

Setting	Code / Value	Description
[Not Configured]	nO	Not assigned
[AI1]	AI1	Analog input AI1 **Factory Setting**
[AI2]...**[AI3]**	AI2...AI3	Analog input AI2...AI3
[AI Virtual 1]...**[AI Virtual 3]**	AIV1...AIV3	Virtual analogic input 1...3
[AI4]...**[AI5]**	AI4...AI5	Analog input AI4...AI5 if VW3A3203 I/O extension module has been inserted
[Ref Frequency via DI]	uPdt	Up/Down function is assigned by DIx
[Ref.Freq-Rmt.Term]	LCC	Reference Frequency via remote terminal
[Ref. Freq-Modbus]	Mdb	Reference frequency via Modbus
[Ref. Freq-CANopen]	CAn	Reference frequency via CANopen if a CANopen module has been inserted
[Ref. Freq-Com. Module]	nEt	Reference frequency via fieldbus module if a fieldbus module has been inserted
[Embedded Ethernet]	EtH	Embedded Ethernet
[DI5 PulseInput Assignment]...**[DI6 PulseInput Assignment]**	PI5...PI6	Digital input DI5...DI6 used as pulse input

[Min PID reference] PiP1 ★

Minimum PID reference.

This parameter can be accessed if **[PID feedback Assign]** PiF is not set to **[Not Configured]** nO.

Setting ❮❯	Description
[Min PID feedback] PiF1...**[Max PID reference]** PiP2	Setting range **Factory setting**: 150

[Max PID reference] P IP2 ★

Maximum PID reference.

This parameter can be accessed if **[PID feedback Assign]** P IF is not set to **[Not Configured]** nO.

Setting ❮❯	Description
[Min PID reference] P IP1...**[Max PID feedback]** P IF2	Setting range **Factory setting**: 900

[Internal PID ref] rP I ★

Internal PID controller reference.

This parameter can be accessed if:

- **[PID feedback Assign]** P IF is not set to **[Not Configured]** nO, and
- **[Intern PID Ref]** P II is set to **[Yes]** YES.

Setting ❮❯	Description
[Min PID reference] P IP1...**[Max PID reference]** P IP2	Setting range **Factory setting**: 150

[Auto/Manual assign.] PAU ★

Auto/Manual select input.

This parameter can be accessed if **[PID feedback Assign]** P IF is not set to **[Not Configured]** nO.

Setting	Code / Value	Description
[Not Assigned]	nO	Not assigned **Factory setting**
[DI1]...**[DI6]**	LI1...LI6	Digital input DI1...DI6
[DI11]...**[DI16]**	LI11...LI16	Digital input DI11...DI16 if VW3A3203 I/O extension module has been inserted
[CD00]...**[CD10]**	CD00...CD10	Virtual digital input CMD.0...CMD.10 in **[I/O profile]** IO configuration
[CD11]...**[CD15]**	CD11...CD15	Virtual digital input CMD.11...CMD.15 regardless of configuration
[C101]...**[C110]**	C101...C110	Virtual digital input CMD1.01...CMD1.10 with integrated Modbus Serial in **[I/O profile]** IO configuration
[C111]...**[C115]**	C111...C115	Virtual digital input CMD1.11...CMD1.15 with integrated Modbus Serial regardless of configuration
[C201]...**[C210]**	C201...C210	Virtual digital input CMD2.01...CMD2.10 with CANopen® fieldbus module in **[I/O profile]** IO configuration
[C211]...**[C215]**	C211...C215	Virtual digital input CMD2.11...CMD2.15 with CANopen® fieldbus module regardless of configuration
[C301]...**[C310]**	C301...C310	Virtual digital input CMD3.01...CMD3.10 with a fieldbus module in **[I/O profile]** IO configuration
[C311]...**[C315]**	C311...C315	Virtual digital input CMD3.11...CMD3.15 with a fieldbus module regardless of configuration
[C501]...**[C510]**	C501...C510	Virtual digital input CMD5.01...CMD5.10 with integrated Ethernet in **[I/O profile]** IO configuration
[C511]...**[C515]**	C511...C515	Virtual digital input CMD5.11...CMD5.15 with integrated Ethernet regardless of configuration

[Manual PID Reference] PIn★

Manual PID reference.

Reference input in manual mode.

This parameter can be accessed if:
- **[PID feedback Assign]** PIF is not set to **[Not Configured]** nO, and
- **[Auto/Manual assign.]** PAU is not set to **[No]** nO.

The preset speeds are active on the manual reference if they have been configured.

Setting	Code / Value	Description
[No]	nO	Not assigned **Factory setting**
[AI1]...**[AI3]**	AI1...AI3	Analog input AI1...AI3
[AI4]...**[AI5]**	AI4...AI5	Analog input AI4...AI5 if VW3A3203 I/O extension module has been inserted
[PulseInput Assignment On DI5]...**[PulseInput Assignment On DI6]**	PI5...PI6	Digital input DI5...DI6 used as pulse input

[PID preset references] Pr I - Menu

Access

[Complete settings] ➡ **[Pump functions]** ➡ **[PID controller]** ➡ **[PID Reference]** ➡ **[PID preset references]**

About This Menu

The function can be accessed if **[PID feedback Assign]** PIF is assigned.

[2 PID Preset Assign] Pr2

2 PID preset assignment.

If the assigned input or bit is at 0, the function is inactive.

If the assigned input or bit is at 1, the function is active.

Setting	Code / Value	Description
[Not Assigned]	nO	Not assigned **Factory setting**
[DI1]...**[DI6]**	LI1...LI6	Digital input DI1...DI6
[DI11]...**[DI16]**	LI11...LI16	Digital input DI11...DI16 if VW3A3203 I/O extension module has been inserted
[CD00]...**[CD10]**	CD00...CD10	Virtual digital input CMD.0...CMD.10 in **[I/O profile]** IO configuration
[CD11]...**[CD15]**	CD11...CD15	Virtual digital input CMD.11...CMD.15 regardless of configuration
[C101]...**[C110]**	C101...C110	Virtual digital input CMD1.01...CMD1.10 with integrated Modbus Serial in **[I/O profile]** IO configuration
[C111]...**[C115]**	C111...C115	Virtual digital input CMD1.11...CMD1.15 with integrated Modbus Serial regardless of configuration
[C201]...**[C210]**	C201...C210	Virtual digital input CMD2.01...CMD2.10 with CANopen® fieldbus module in **[I/O profile]** IO configuration
[C211]...**[C215]**	C211...C215	Virtual digital input CMD2.11...CMD2.15 with CANopen® fieldbus module regardless of configuration
[C301]...**[C310]**	C301...C310	Virtual digital input CMD3.01...CMD3.10 with a fieldbus module in **[I/O profile]** IO configuration
[C311]...**[C315]**	C311...C315	Virtual digital input CMD3.11...CMD3.15 with a fieldbus module regardless of configuration
[C501]...**[C510]**	C501...C510	Virtual digital input CMD5.01...CMD5.10 with integrated Ethernet in **[I/O profile]** IO configuration
[C511]...**[C515]**	C511...C515	Virtual digital input CMD5.11...CMD5.15 with integrated Ethernet regardless of configuration

[4 PID Preset Assign] PrH

4 PID preset assignment.

Identical to **[2 PID Preset Assign]** Pr2 *(see page 317)*.

Verify that **[2 PID Preset Assign]** Pr2 has been assigned before assigning this function.

[Ref PID Preset 2] rP2 ★

Second PID preset reference.

This parameter can be accessed only if **[2 PID Preset Assign]** Pr2 is assigned.

Setting ❮❯	Description
[Min PID reference] P1P...**[Max PID reference]** P1P2	Setting range **Factory setting**: 300

[Ref PID Preset 3] rP3 ★

Third PID preset reference.

This parameter can be accessed only if **[4 preset PID ref.]** PrH is assigned.

Setting ❮❯	Description
[Min PID reference] P1P...**[Max PID reference]** P1P2	Setting range **Factory setting**: 600

[Ref PID Preset 4] rP4 ★

Fourth PID preset reference.

This parameter can be accessed only if **[2 preset PID ref.]** Pr2 and **[4 preset PID ref.]** PrH are assigned.

Setting ❮❯	Description
[Min PID reference] P1P...**[Max PID reference]** P1P2	Setting range **Factory setting**: 900

[PID Reference] rF - Menu

Access

[Complete settings] ➡ [Pump functions] ➡ [PID controller] ➡ [PID Reference]

[Predictive Speed Ref] FPI ★

Predictive speed reference.

This parameter can be accessed if:

- **[Access Level]** LAC is set to **[Expert]** EPr.
- **[PID feedback]** PIF is not set to **[No]** nO

Setting	Code / Value	Description
[Not Configured]	nO	Not assigned **Factory setting**
[AI1]...[AI3]	AI1...AI3	Analog input AI1...AI3
[AI4]...[AI5]	AI4...AI5	Analog input AI4...AI5 if VW3A3203 I/O extension module has been inserted
[Ref. Freq-Rmt.Term]	LCC	Reference frequency via remote terminal
[Ref. Freq-Modbus]	Mdb	Reference frequency via Modbus
[Ref. Freq-CANopen]	CAn	Reference frequency via CANopen
[Ref. Freq-Com. Module]	nEt	Reference frequency via communication module
[Embedded Ethernet]	EtH	Embedded Ethernet
[PulseInput Assignment On DI5]...[PulseInput Assignment On DI6]	PI5...PI6	Digital input DI5...DI6 used as pulse input

[Speed Input %] PSr ★

PID speed input % reference.

- This parameter can be accessed if **[Access Level]** LAC is set to **[Expert]** EPr, and
- **[Predictive Speed Ref]** FPI is not set to **[Not Configured]** nO.

Setting ( )	Description
1...100%	Setting range **Factory setting**: 100%

[Settings] SEt - Menu

Access

[Complete settings] ➡ **[Pump functions]** ➡ **[PID controller]** ➡ **[Settings]**

About This Menu

Following parameters can be accessed if **[PID Feedback]** PIF is not set to **[Not Configured]** nO.

NOTE: This function cannot be used with some other functions.

[PID Prop.Gain] rPG ★

Proportional gain.

Setting ❮❯	Description
0.01...100.00	Setting range **Factory setting**: 1.00

[PI Intgl.Gain] rIG ★

Integral gain.

Setting ❮❯	Description
0.01...100.00	Setting range **Factory setting**: 1.00

[PID derivative gain] rdG ★

Derivative gain.

Setting ❮❯	Description
0.00...100.00	Setting range **Factory setting**: 0.00

[PID ramp] PrP ★

PID acceleration/deceleration ramp, defined to go from **[Min PID reference]** PIP1 to **[Max PID reference]** PIP2 and conversely.

Setting ❮❯	Description
0.0...99.9 s	Setting range **Factory setting**: 0.0 s

[PID Inversion] PIC ★

PID inversion.

Setting	Code / Value	Description
[No]	nO	No **Factory setting**
[Yes]	YES	Yes

[PID Min Output] PoL ★

PID controller minimum output in Hz.

Setting ❮❯	Description
-500.0...500.0 Hz	Setting range **Factory setting**: 0.0 Hz

[PID Max Output] PoH ★

PID controller maximum output in Hz.

Setting	Description
0.0...500.0 Hz	Setting range **Factory setting**: 60.0 Hz

[PID Error Warning] PEr ★

PID error warning. **[PID Error Warning]** PEE is active if the value of PID error is greater than the value configured in **[PID Error Warning]** PEr.

Setting	Description
0...65,535	Setting range **Factory setting**: 100

[PID Integral OFF] PI5 ★

Integral shunt.

If the assigned input or bit is at 0, the function is inactive (the PID integral is enabled).

If the assigned input or bit is at 1, the function is active (the PID integral is disabled).

Setting	Code / Value	Description
[Not Assigned]	nO	Not assigned **Factory setting**
[DI1]...**[DI6]**	LI1...LI6	Digital input DI1...DI6
[DI11]...**[DI16]**	LI11...LI16	Digital input DI11...DI16 if VW3A3203 I/O extension module has been inserted
[CD00]...**[CD10]**	Cd00...Cd10	Virtual digital input CMD.0...CMD.10 in **[I/O profile]** IO configuration
[CD11]...**[CD15]**	Cd11...Cd15	Virtual digital input CMD.11...CMD.15 regardless of configuration
[C101]...**[C110]**	C101...C110	Virtual digital input CMD1.01...CMD1.10 with integrated Modbus Serial in **[I/O profile]** IO configuration
[C111]...**[C115]**	C111...C115	Virtual digital input CMD1.11...CMD1.15 with integrated Modbus Serial regardless of configuration
[C201]...**[C210]**	C201...C210	Virtual digital input CMD2.01...CMD2.10 with CANopen® fieldbus module in **[I/O profile]** IO configuration
[C211]...**[C215]**	C211...C215	Virtual digital input CMD2.11...CMD2.15 with CANopen® fieldbus module regardless of configuration
[C301]...**[C310]**	C301...C310	Virtual digital input CMD3.01...CMD3.10 with a fieldbus module in **[I/O profile]** IO configuration
[C311]...**[C315]**	C311...C315	Virtual digital input CMD3.11...CMD3.15 with a fieldbus module regardless of configuration
[C501]...**[C510]**	C501...C510	Virtual digital input CMD5.01...CMD5.10 with integrated Ethernet in **[I/O profile]** IO configuration
[C511]...**[C515]**	C511...C515	Virtual digital input CMD5.11...CMD5.15 with integrated Ethernet regardless of configuration

[PID acceleration time] ACCP ★

PID: acceleration during start-up.

PID start ramp can be applied before starting the PID controller to allow reaching quickly the PID reference without increasing PID gains. If configured, the **[Start Accel Ramp]** ACC5 is applied up to **[Low Speed]** LSP instead of **[PID acceleration time]** ACCP.

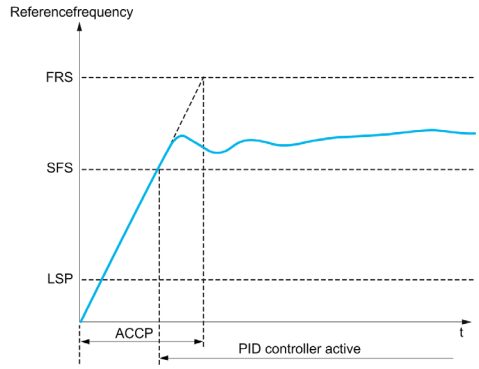

Setting	Description
0.01...99,99 s (1)	Setting range **Factory setting**: 5.00 s
1 Range 0.01 to 99.99 s or 0.1 to 999.9 s or 1...6,000 s according to **[Ramp increment]** INR.	

[PID Start Ref Freq] SFS ★

PID: speed reference for start-up.

Setting	Description
0.0...500.0 Hz	Setting range If **[PID Start Ref Freq]** SFS is lower than **[Low speed]** LSP, this function has no effect. **Factory setting**: 0.0 Hz

Section 8.10
[Pump functions] - [Sleep/wakeup]

What Is in This Section?

This section contains the following topics:

Topic	Page
[Sleep/Wakeup] SPW - Overview	324
[Sleep menu] SLP - Menu	327
[Sleep menu] SLP - Menu	329
[Sleep menu] SLP - Menu	330
[Boost] Sbt - Menu	331
[Advanced sleep check] RdS - Menu	332
[Wake up menu] WKP - Menu	334
[Wake up menu] WKP - Menu	335

[Sleep/Wakeup] SPW - Overview

About This Menu

Following parameters can be accessed if **[PID feedback Assign]** PIF is not set to **[Not Configured]** nO.

⚠ WARNING
UNANTICIPATED EQUIPMENT OPERATION
Verify that activating this function does not result in unsafe conditions.
Failure to follow these instructions can result in death, serious injury, or equipment damage.

The purpose of the "Sleep / Wake-Up" function is to stop the motor in process standstill situations.

It allows you to save energy and helps to prevent premature aging of some equipment that cannot run for a long time at low speed because the greasing or cooling depends on the machine speed.

In a pressure-controlled pumping application:
- The purpose of the Sleep / Wake-Up function is to manage periods of the application where the water demand is low and where it is not needed to keep the main pumps running.
- It allows you to save energy in low demand periods. Then, when the demand is increasing, the application needs to wake up in order to meet the demand.
- Optionally, during a sleep period, a Jockey pump can be started to maintain an emergency service pressure or meet a low water demand.

Depending on user-defined wakeup conditions, the motor is restarted automatically.

Sleep/Wake-Up in PID Control Mode

When the drive is used in PID control, one of the following conditions is used to switch the application to the sleep state:
- Sleep on low speed(when all fixed pumps are Off in case of a multi-pump application).
- Sleep on low sleep sensor value (using flow sensor for monitoring).
- Sleep on low motor power (when all fixed pumps are Off in case of a multi-pump application).
- Sleep on external condition (using drive input).

The drive is in "PID control mode" when PID is active. Typically when:
- PID is configured, and
- Channel 1 is selected, and
- PID is in automatic mode.

When the drive is in a sleep state, a wake-up condition is used to restart the application:
- Wake-up on PID Feedback level
- Wake-up on PID Error level
- Wake-up on low-pressure condition

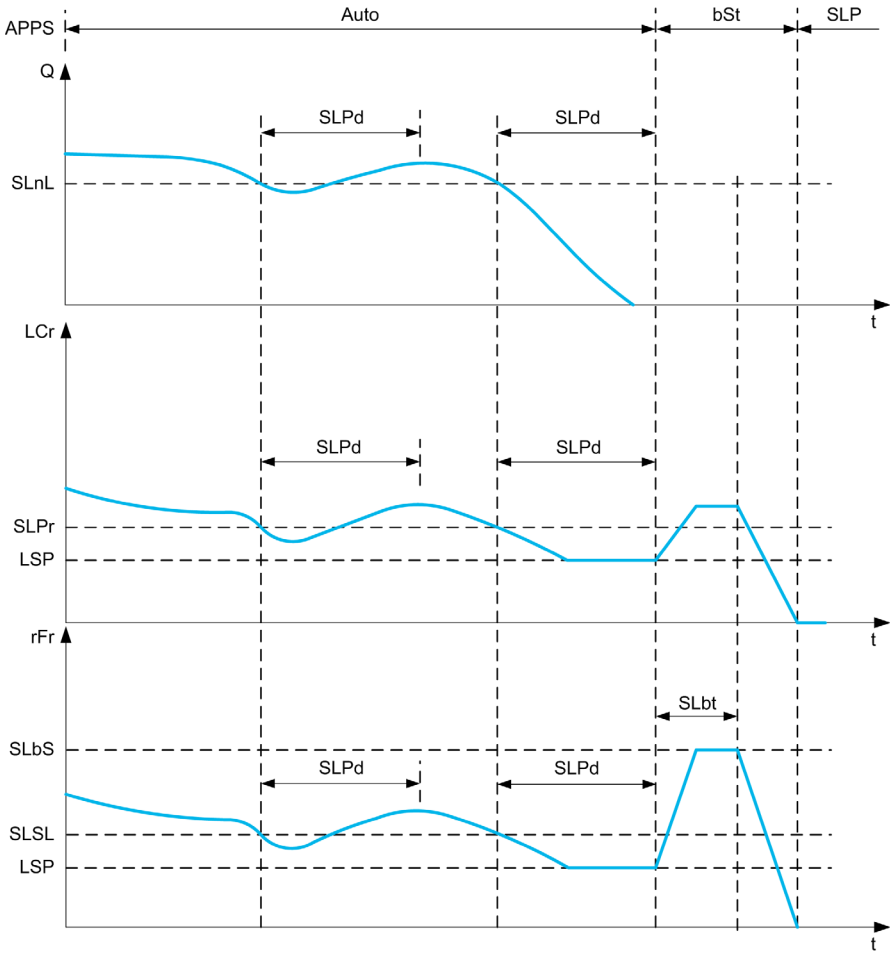

Sleep Conditions in PID Control Mode

If there is no valid wake-up condition, then the system switches to the sleep mode after one of the configured sleep conditions remains longer than **[Sleep Delay]** SLPd.

The sleep detection mode is selected by configuring **[Sleep Detect Mode]** SLPM. Then the system switches to sleep mode if the selected condition is met:

Configuration	Condition
LF sleep on flow sensor value	Sensor value is below the sleep level
SW sleep on switch or external condition	The switch input becomes active
SPd sleep on speed	The output frequency is below the sleep speed and all auxiliary
PWr sleep on power level	The output power is below the sleep power
HP sleep on pressure sensor value	Sensor value is higher than the sleep level
or multiple conditions	At least 1 of the configured condition to enter in sleep mode is met

Wake-Up Conditions in PID Control Mode

The system wakes up according to **[Wake Up Mode]** WuPM configuration:

- On PID Feedback level
- On PID Error level.
- On low-pressure condition.

The system wakes up if the wake up conditions are valid for a time longer than the **[Wake Up Delay]** WuPd.

If **[Feedback]** *FbK* is selected, then the system wakes up and goes back in PID control mode:
- When PID feedback drops below configured **[Wake Up Process Level]** *WuPF* if PID is configured in Direct mode, (**[PID Inversion]** *PiC* is set to *noS*).
- When PID feedback raises above configured **[Wake Up Process Level]** *WuPF*, if PID is configured in Reverse mode (**[PID Inversion]** *PiC* is set to *YES*).

If **[Error]** *Err* is selected, then the system wakes up and goes back in PID control mode:
- When PID feedback drops below (**[PID reference]** *rPC* - **[Wake Up Process Error]** *WuPE*), if PID is configured in Direct mode (**[PID Inversion]** *PiC* is set to *noS*).
- When PID feedback raises above (**[PID reference]** *rPC* + **[Wake Up Process Error]** *WuPE*), if PID is configured in Reverse mode (**[PID Inversion]** *PiC* is set to *YES*).

If **[Pressure]** *LP* is selected, then the system wakes up and goes back in PID control mode when the pressure feedback drops below **[Wake Up Process Level]** *WuPF*.

Boosting Phase in PID Control Mode

When entering the sleep mode, the motor accelerates to **[Sleep Boost Speed]** *SLbS* during **[Sleep Boost Time]** *SLbt* and then stops.

If **[Sleep Boost Time]** *SLbt* is set to 0, then the boost phase is ignored.

Initial State in PID Control Mode

Just after the system starts in automatic mode (a run order appears while in automatic mode - channel 1 already selected and PID auto):
- If a wake-up condition is met, the drive goes in PID control mode (PID started).
- If a wake-up condition is not met, the drive goes in sleep mode (PID stays stopped and motor is kept halted), and Boosting phase is ignored.

When the control is switched to automatic mode while the motor is running (switch to channel 1 or switch to PID auto mode for example), the drive stays in running state and switches to PID automatic mode.

Configuration of Sleep External Condition (Usage of a No Flow Switch for Example)

Sleep switch allows you to select the source of sleep external condition:
- *noS*: no input selected for the sleep external condition.
- *diX*: the sleep external condition (switch for example) is connected to DIx (the assignment is also possible on a control bit in I/O profile).

Configuration of Sleep Sensor (Flow or Pressure Sensor)

The assignment of a sleep sensor, the configuration of the selected physical input and the configuration of scaling to process value are performed.

A sleep sensor source is selected by **[Inst. Flow Assign.]** *FSIA* and **[OutletPres Assign]** *PS2A* which allows to select the analog or pulse input on which the sensor is connected:
- *noS*: no input selected for sleep sensor value.
- *AiX*: sleep sensor is connected to AIx.
- *AiuX*: sleep sensor is connected to virtual AIUx.
- *PiX*: sleep sensor is connected to pulse input PIx.

The configuration of an analog input is performed.

The configuration of a pulse input is performed.

Depending on the selected source, the process range of the sensor is configured by:
- **[AIx Lowest Process]** *AiXJ*, **[AIx Highest Process]** *AiXK* (without unit), when connected on an analog input.
- **[AIv1 Lowest Process]** *AV1J*, **[AIv1 Highest Process]** *AV1K* (without unit), when using the virtual analog input.
- **[DIx PulseInput Low Freq]** *PiLX*, **[DIx PulseInput High Freq]** *PiHX* (without unit), when connected on a pulse input configured in frequency.

[Sleep menu] SLP - Menu

Access

[Complete settings] ➡ [Pump functions] ➡ [Sleep/Wakeup] ➡ [Sleep menu]

About This Menu

[Sleep Detect Mode] SLPM

Sleep detection mode.

Setting	Code / Value	Description
[No]	nO	Not configured **Factory setting**
[Switch]	SW	System enters in sleep mode on switch condition
[Flow]	LF	System enters in sleep mode on low flow condition
[Speed]	SPd	System enters in sleep mode on speed condition
[Power]	PWr	System enters in sleep mode on power condition
[Pressure]	HP	System enters in sleep mode on high-pressure condition
[Multiple]	or	System enters in sleep mode on multiple-OR condition

[Sleep Switch Assign] SLPW

Sleep switch assignment.

This parameter can be accessed if **[Sleep Detect Mode]** SLPM is set to **[Switch]** SW or **[Multiple]** or.

Select an external condition to enter in sleep mode (for example, flow switch).

Setting	Code / Value	Description
[Not Assigned]	nO	Not assigned **Factory setting**
[DI1]...[DI6]	LI1...LI6	Digital input DI1...DI6
[DI11]...[DI16]	LI11...LI16	Digital input DI11...DI16 if VW3A3203 I/O extension module has been inserted
[CD00]...[CD10]	CD00...CD10	Virtual digital input CMD.0...CMD.10 in **[I/O profile]** IO configuration
[CD11]...[CD15]	CD11...CD15	Virtual digital input CMD.11...CMD.15 regardless of configuration
[C101]...[C110]	C101...C110	Virtual digital input CMD1.01...CMD1.10 with integrated Modbus Serial in **[I/O profile]** IO configuration
[C111]...[C115]	C111...C115	Virtual digital input CMD1.11...CMD1.15 with integrated Modbus Serial regardless of configuration
[C201]...[C210]	C201...C210	Virtual digital input CMD2.01...CMD2.10 with CANopen® fieldbus module in **[I/O profile]** IO configuration
[C211]...[C215]	C211...C215	Virtual digital input CMD2.11...CMD2.15 with CANopen® fieldbus module regardless of configuration
[C301]...[C310]	C301...C310	Virtual digital input CMD3.01...CMD3.10 with a fieldbus module in **[I/O profile]** IO configuration
[C311]...[C315]	C311...C315	Virtual digital input CMD3.11...CMD3.15 with a fieldbus module regardless of configuration
[C501]...[C510]	C501...C510	Virtual digital input CMD5.01...CMD5.10 with integrated Ethernet Modbus TCP in **[I/O profile]** IO configuration
[C511]...[C515]	C511...C515	Virtual digital input CMD5.11...CMD5.15 with integrated Ethernet Modbus TCP regardless of configuration
[DI1 (Low level)]...[DI6 (Low level)]	LILL...LL6L	Digital input DI1...DI6 used at low level

[Inst. Flow Assign.] FS IA ★

Installation flow sensor assignment.

This parameter can be accessed if **[Sleep Detect Mode]** SLPM is set to **[Flow]** LF, or **[Multiple]** or.

Setting	Code / Value	Description
[Not Configured]	nO	Not assigned **Factory setting**
[AI1]...**[AI3]**	AI1...AI3	Analog input AI1...AI3
[AI4]...**[AI5]**	AI4...AI5	Analog input AI4...AI5 if VW3A3203 I/O extension module has been inserted
[AI Virtual 1]...**[AI Virtual 3]**	AIV1...AIV3	Virtual analogic input 1...3
[Di5 PulseInput Assignment]...**[Di6 PulseInput Assignment]**	PI5...PI6	Digital input DI5...DI6 used as pulse input
[Est. Pump Flow]	SLPF	Sensor less estimated flow
[Est. System Flow]	SLSF	Estimated system flow This selection is only possible if **[Pump System Archit]** MPSA is set to **[Multi Drives]** nVSd or **[Multi Masters]** nVSdr **NOTE:** To use this selection, all the pump characteristics of the system must be configured.
NOTE: For sensor configuration, refer to section **[Sensors assignment]** *(see page 216)*.		

[Sleep menu] SLP - Menu

Access

[Complete settings] ➡ **[Pump functions]** ➡ **[Sleep/wakeup]** ➡ **[Sleep menu]**

[Sleep Flow Level] SLnL ★

Sleep flow level.

Sensor level under which the system should enter the sleep mode (Zero value to deactivate).

This parameter can be accessed if:

- **[Inst. Flow Assign.]** FS IA is not set to **[Not Configured]** no, and
- **[Sleep Detect Mode]** SLPM is set to
  - **[Flow]** LF, or
  - **[Multiple]** or.

Setting ❮❯	Description
[No] no to 32,767	Setting range Unit: **[Flow rate unit]** SUFr (for example, %, l/s; m3/h) **Factory setting**: **[No]** no

[OutletPres Assign] PS2A ★

Outlet pressure sensor assignment.

This parameter can be accessed if:

- **[Sleep Detect Mode]** SLPM is set to **[Pressure]** HP, or
- **[Sleep Detect Mode]** SLPM is set to **[Multiple]** or.

Setting	Code / Value	Description
[Not Configured]	no	Not assigned **Factory setting**
[AI1]...**[AI3]**	AI1...AI3	Analog input AI1...AI3
[AI4]...**[AI5]**	AI4...AI5	Analog input AI4...AI5 if VW3A3203 I/O extension module has been inserted
[AI Virtual 1]...**[AI Virtual 3]**	AIV1...AIV3	Virtual analogic input 1...3
NOTE: For sensor configuration, refer to section **[Sensors assignment]** *(see page 216)*.		

[Sleep menu] SLP - Menu

Access

[Complete settings] ➡ **[Pump functions]** ➡ **[Sleep/wakeup]** ➡ **[Sleep menu]**

[Sleep Pressure Level] SLPL

Sleep pressure level.

This parameter can be accessed if:
- **[OutletPres Assign]** P52A is not set to **[Not Configured]** nO, and
- **[Sleep Detect Mode]** SLPM is set to
  - **[Pressure]** HP, or
  - **[Multiple]** or.

Setting	Description
[No] nO to 32,767	Setting range Unit: **[Flow rate unit]** SUFr (for example, %, l/s; m3/h) **Factory setting**: **[No]** nO

[Sleep Min Speed] SLSL ★

Sleep flow level.

Speed level under which the system should enter the sleep mode.

This parameter can be accessed if:
- **[Sleep Detect Mode]** SLPM is set to **[Speed]** SPd, or
- **[Sleep Detect Mode]** SLPM is set to **[Multiple]** or.

NOTE: To set this parameter, each **[Low Speed]** LSP values of all drives of a multipump architecture needs to be taken into account.

Setting	Description
0...500.0 Hz	Setting range **Factory setting**: **[No]** nO

[Sleep Power Level] SLPr ★

Sleep power level.

Power level under which the system should enter the sleep mode.

This parameter can be accessed if:
- **[Sleep Detect Mode]** SLPM is set to **[Power]** PWr, or
- **[Sleep Detect Mode]** SLPM is set to **[Multiple]** or.

Setting	Description
0...**[Nominal Motor Power]** nPr	Setting range **Factory setting**: **[No]** nO

[Sleep Delay] SLPd ★

Sleep delay.

This parameter can be accessed if **[Sleep Detect Mode]** SLPM is not set to **[Not Configured]** nO.

Setting	Description
0...3,600 s	Setting range **Factory setting**: 20 s

[Boost] SbE - Menu

Access

[Complete settings] ➡ **[Pump functions]** ➡ **[Sleep/wakeup]** ➡ **[Sleep menu]** ➡ **[Boost]**

About This Menu

Following parameters can be accessed if **[Sleep Detect Mode]** SLPM is not set to **[No]** nO.

[Sleep Boost Speed] SLbS ★

Sleep boost speed.

Setting	Description
0...599.0 Hz	Setting range **Factory setting**: nO

[Sleep Boost Time] SLbt ★

Sleep boost time.

Setting	Description
0...3,600 s	Setting range **Factory setting**: nO

[Advanced sleep check] A d S - Menu

Access

[Complete settings] ➡ [Pump functions] ➡ [Sleep/wakeup] ➡ [Sleep menu] ➡ [Advanced sleep check]

About This Menu

This function can be activated if **[Sleep Detect Mode]** S L P M is not set to **[No]** n o.

This function can be activated if:

- **[Type of control]** t o C t is set to **[Pressure]** P r E S S and,
- **[Sleep Detect Mode]** S L P M is not set to **[No]** n o.

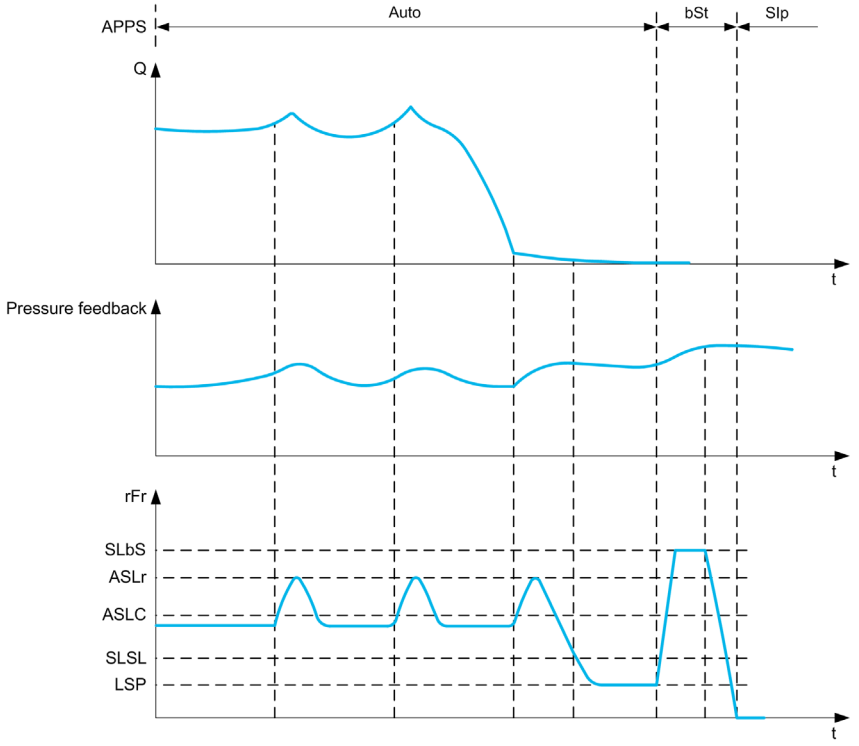

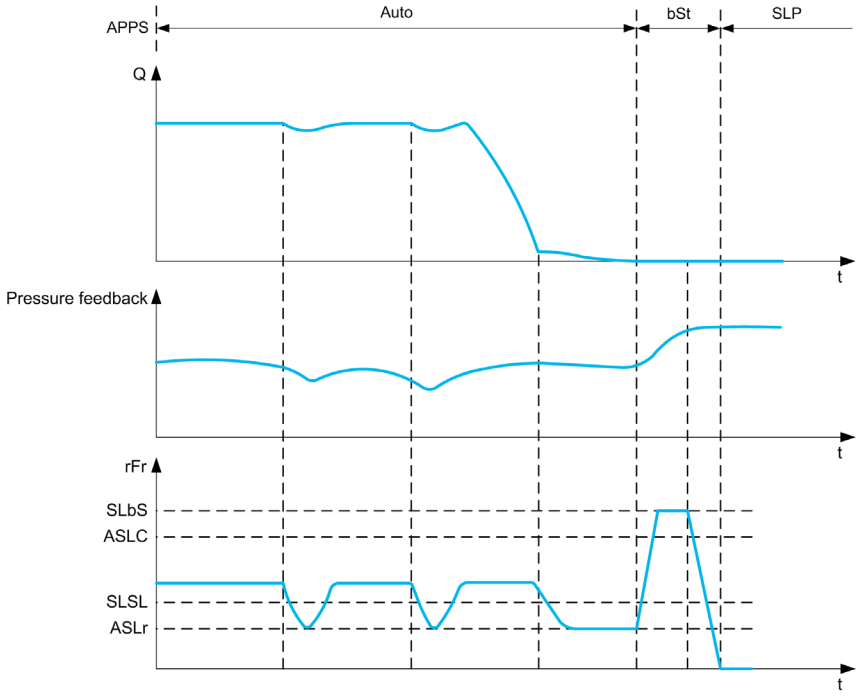

[Sleep Mode] ASLM

Advanced sleep mode.

Setting	Code / Value	Description
[No]	nO	No **Factory setting**
[YES]	YES	Yes

[Sleep Condition] ASLC ★

Advanced sleep verifies speed condition.

This parameter can be accessed if **[Sleep Mode]** ASLM is not set to **[No]** nO.

Setting	Description
0...**[High Speed]** HSP	Setting range **Factory setting**: 0.0 Hz

[Sleep Delay] ASLd ★

Advanced sleep verifies delay.

This parameter can be accessed if **[Sleep Mode]** ASLM is not set to **[No]** nO.

Setting	Description
0...9,999 s	Setting range **Factory setting**: 20 s

[Check Sleep Ref Spd] ASLr ★

Advanced sleep verifies speed reference.

This parameter can be accessed if **[Sleep Mode]** ASLM is not set to **[No]** nO.

Setting	Description
0...**[High Speed]** HSP	Setting range **Factory setting**: 0.0 Hz

[Wake up menu] WKP - Menu

Access

[Complete settings] ➡ **[Pump functions]** ➡ **[Sleep/wakeup]** ➡ **[Wake up menu]**

About This Menu

This menu can be accessed if **[Sleep Detect Mode]** SLPM is not set to **[Not Configured]** nO.

[Wake Up Mode] WUPM ★

Wake-up mode.

Setting	Code / Value	Description
[Feedback]	FbK	Wake-up on PID feedback level **Factory setting**
[Error]	Err	Wake-up on PID error level
[Pressure]	LP	Wake-up on low-pressure condition

[Wake Up Process Level] WUPF ★

Wake-up process value level.

This parameter can be accessed if **[Wake Up Mode]** WUPM is set to **[FeedBack]** FbK.

Setting ❮❯	Description
[Min PID feedback] PIF1...**[Max PID feedback]** PIF2	Setting range **Factory setting**: 0

[Wake Up Process Error] WUPE ★

Wake-up process value error level.

This parameter can be accessed if **[Wake Up Mode]** WUPM is set to **[Error]** Err.

Setting ❮❯	Description
0...**[Max PID feedback]** PIF2	Setting range **Factory setting: 0,0 Hz**

[OutletPres Assign] PS2A ★

Outlet pressure sensor assignment.

This parameter can be accessed if **[Wake Up Mode]** WUPM is set to **[Pressure]** LP.

Setting	Code / Value	Description
[Not Configured]	nO	Not assigned **Factory setting**
[AI1]...**[AI3]**	AI1...AI3	Analog input AI1...AI3
[AI4]...**[AI5]**	AI4...AI5	Analog input AI4...AI5 if VW3A3203 I/O extension module has been inserted
[AI Virtual 1]...**[AI Virtual 3]**	AIV1...AIV3	Virtual analogic input 1...3
NOTE: For sensor configuration, refer to section **[Sensors assignment]** *(see page 216)*.		

[Wake up menu] WKP - Menu

Access

[Complete settings] ➡ **[Pump functions]** ➡ **[Sleep/wakeup]** ➡ **[Wake up menu]**

About This Menu

This menu can be accessed if **[Sleep Detect Mode]** SLPM is not set to **[Not Configured]** nO.

[Wake Up Press Level] WuPL ★

Wake-up pressure level.

Pressure level over which the system should leave the sleep mode.

This parameter can be accessed if **[Wake Up Mode]** WuPM is set to **[Pressure]** LP.

Setting	Description
[No] nO to 32,767	Setting range Unit: **[P sensor unit]** SuPr (for example, Pa, Bar, PSI, %) **Factory setting**: **[No]** nO

[Wake Up Delay] WuPd ★

Wake-up delay.

Setting	Description
0...3,600 s	Setting range **Factory setting**: 0 s

Section 8.11
[Pump functions] - [Feedback monitoring]

[Feedback monitoring] *F K Π* - Menu

Access

[Complete settings] ➞ **[Pump functions]** ➞ **[Feedback monitoring]**

About This Menu

The function is typically used to detect cases where the installation capability is exceeded or where the installation is not operating properly:

- Fire hydrant opened.
- Pump start-up with open discharge valve.
- Mechanical breakdown of pipes.
- Water leakage.

When the drive is running at high speed, this function monitors the PID feedback in order to detect if it is out of a given range around the setpoint during a configurable time.

By using a warning or a detected error, this function also indicates that:

- The capability of the installation is exceeded
- The proper control could not be ensured
- Something is wrong on the installation.

This menu can be accessed if **[PID feedback Assign]** *P ı F* is not set to **[Not Configured]** *n o*.

This graphic presents the PID feedback monitoring:

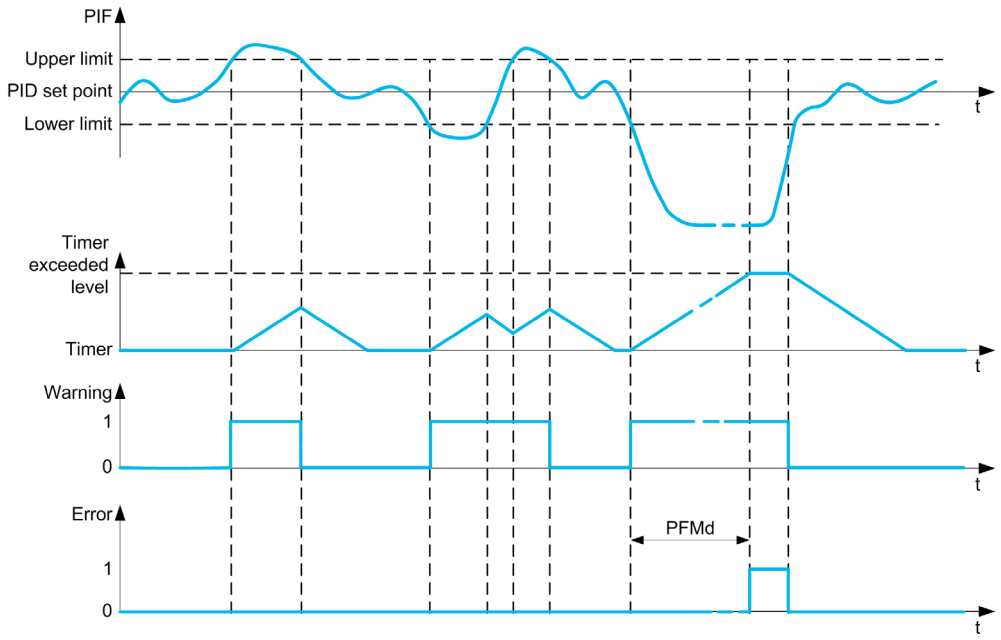

[PID Fdbk Monitoring] *P F Π Π*

PID feedback monitoring mode.

Parameter used to activate the function.

Setting	Code / Value	Description
[No]	*n o*	No **Factory setting**
[Yes]	*Y E S*	Yes

[PID Fdbk Range] PFPr ★

PID feedback monitoring range.

Range within which the PID feedback value is supposed to stay in normal situation.

This parameter can be accessed if **[PID Fdbk Monitoring]** PFPP is not set to **[No]** nO.

Setting	Description
0...100%	Setting range **Factory setting**: 3%

[PID Fdbk Error Delay] PFPd ★

PID feedback monitoring delay.

Delay to trig an error after detection of an anomaly.

This parameter can be accessed if **[PID Fdbk Monitoring]** PFPP is not set to **[No]** nO.

Setting	Description
0...3,600 s	Setting range **Factory setting**: 10 s

[PID Fdbk Error Resp] PFPb ★

PID feedback monitoring response to a detected error.

Define how the drive reacts when a feedback monitoring error occurs.

This parameter can be accessed if **[PID Fdbk Monitoring]** PFPP is not set to **[No]** nO.

Setting	Code / Value	Description
[Ignore]	nO	Detected error ignored
[Freewheel Stop]	YES	Freewheel stop
[Per STT]	StT	Stop according to **[Type of stop]** StT parameter but without an error triggered after stop
[Fallback Speed]	LFF	Change to fallback speed, maintained as long as the detected error persists and the command has not been removed (1)
[Ramp stop]	rMP	Stop on ramp **Factory setting**

Section 8.12
[Pump functions] - [Pump characteristics]

[Pump characteristics] PCr - Menu

Access

[Complete settings] ➞ [Pump functions] ➞ [Pump characteristics]

About This Menu

Centrifugal pump characteristic allows you to define the curve points for:
- Head
- Mechanical power
- Efficiency

The pump manufacture supplies these elements and it is necessary to define the performances of a pump at a given speed.

Pump data is characterized in several points and for a given speed (typically nominal speed):
- Speed (N) used for characterization: typically nominal speed.
- Flow (Q) on each characteristic point.
- Head (H) on each characteristic point.
- Power (P) on each characteristic point.

Example for simplified pump data curves:

Efficiency / Flow rate	Head / Flow rate	Power / Flow rate
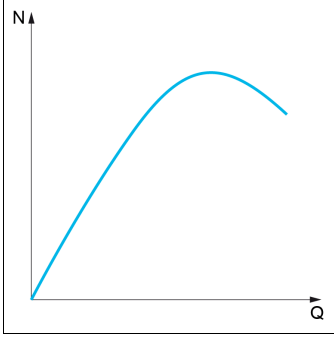	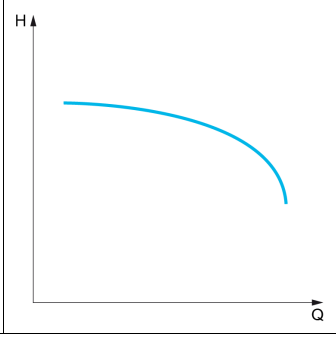	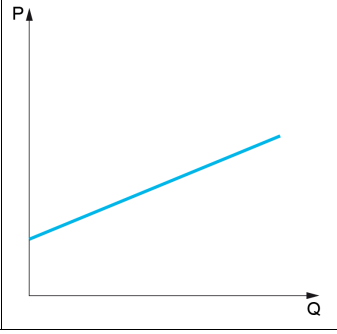

This function allows to:
- interpolate the curves at a given speed, thus minimizing interpolation errors,
- interpolate the curves for other pump speeds using affinity motor control types.

Use-case

Several functions need **[HQ]** HCU or **[PQ]** PCU curves before being used.

Monitoring of pump working point on pump curve:

Use-case	Characterized Pump Data (vs. pump speed)	
	HQ	PQ
"Head vs Flow" curve	X	
"Power vs Flow" curve		X
"Power vs Speed" (fixed Q values)		X

Sensorless flow estimation:

Use-case	Characterized Pump Data (vs. pump speed)	
	HQ	PQ
Estimation of flow from head	X	
Estimation of flow from power		X

Function Activation

To activate this function, set **[Mode]** *PCM* to **[HQ]** *HQ* or **[PQ]** *PQ* or **[PHQ]** *PHQ*. It depends on the data you enter.

After entering all the data (curve + BEP), set **[Pump Curve Activate]** *PCA* to **[YES]** *YES*.

Curve Setting

The entering points should be spaced as evenly as possible over the operating range for the given speed:

Wrong points spacing	Right points spacing
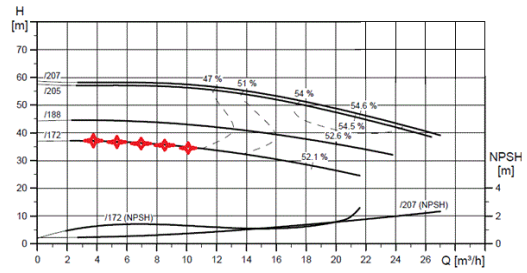	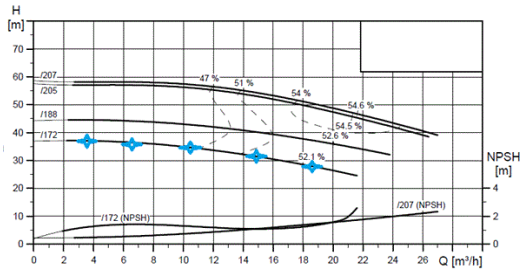

Wrong points entering	Right points entering
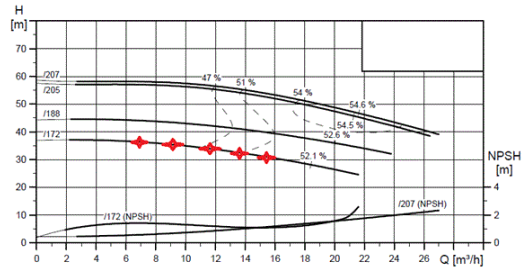	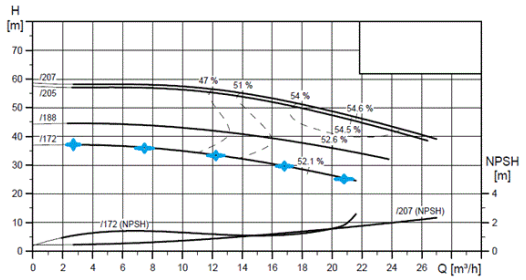

For **[HQ]** *HQ* or **[PQ]** *PQ* curves, 5 points are advised:

- Q1 near the low or zero flow point.
- Q3 near the BEP point.
- Q5 near the zero head point.
- Q2 equidistant between Q1 and Q3.
- Q4 equidistant between Q3 and Q5.

Configuration of Best Efficiency Point (BEP)

The configuration of BEP allows you to display this on *HQ*, *PQ* and *EQ* curve:

- Pump curve flow rate at BEP: **[Flow at BEP]** *PCbQ*.
- Pump curve head at BEP: **[Head BEP]** *PCbH*.
- Pump curve power at BEP: **[Power BEP]** *PCbP*.

This graphic represents the curve and the BEP:

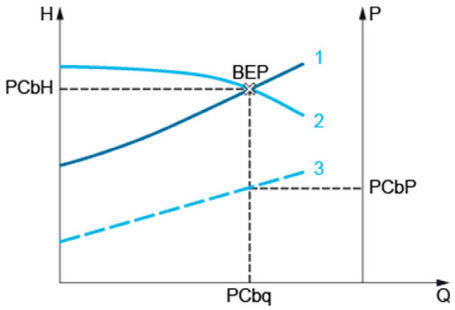

1 System curve
2 Pump *HQ* curve
3 Pump *PQ* curve

[Mode] PCM

Pump curve mode.

Select which curve data are managed and is entered on.

Setting	Code / Value	Description
[No]	nO	Function is not activated **Factory setting**
[HQ]	HQ	H, Q data is activated
[PQ]	PQ	P, Q data is activated
[PHQ]	PHQ	P, H, Q data is activated

[Pump Curve Activate] PCA ★

Pump curve activation.

Parameter used to reset or validate data to be used by other functions.

This parameter can be accessed if **[Mode]** PCM is not set to **[No]** nO.

Setting	Code / Value	Description
[No]	nO	Pump characteristics are deactivated and data can be modified **Factory setting**
[YES]	YES	Ask for pump characteristic activation. If it does not succeed, write back NO; else lock data modification

[Status] PCS ★

Pump curve status.

This parameter can be accessed if **[Mode]** PCM is not set to **[No]** nO.

Setting	Code / Value	Description
[None]	nonE	Function is not configured **Factory setting**
[Inactive]	nACt	Function is configured but inactive (data is unlocked)
[Active]	ACt iVE	Data is activated and can be used for other functions (data is locked)
[Failed]	FAiLEd	Data activation does not succeed (some points have not been entered or data entered does not comply with the rules)

[Pump Liquid Density] rHoC ★

Liquid density used to characterize pump.

This parameter can be accessed if **[Mode]** PCM is not set to **[No]** nO.

Setting ↻	Description
100...10,000 kg/m3	Setting range **Factory setting**: 1000 kg/m3

[Pump Speed] PCSP ★

Pump speed for which curves are entered.

This parameter can be accessed if **[Mode]** PCM is not set to **[No]** nO.

Setting	Description
0...32,767 rpm	Setting range **Factory setting**: 0 rpm

[Flow at BEP] PCb9 ★

Pump curve flow rate at BEP.

This parameter can be accessed if **[Mode]** PCM is not set to **[No]** no.

Setting	Description
0...32,767	Setting range according to **[Flow rate unit]** SuFr **Factory setting**: 0

[Head BEP] PCbH ★

Pump curve head at BEP.

This parameter can be accessed if **[Mode]** PCM is not set to **[No]** no.

Setting	Description
0...32,767	Setting range according to **[P sensor unit]** SuPr **Factory setting**: 0

[Power BEP] PCbP ★

Pump curve power at BEP.

This parameter can be accessed if **[Mode]** PCM is not set to **[No]** no.

Setting	Description
0...32,767	Setting range according to **[Motor Standard]** bFr **Factory setting**: 0

[Flow 1] PC9 1 ★

Pump curve flow rate for point 1.

Flow rate entered at point 1 (for HQ and PQ curves).

This parameter can be accessed if **[Mode]** PCM is not set to **[No]** no.

Setting	Description
0...32,767	Setting range according to **[Flow rate unit]** SuFr **Factory setting**: 0

[Head 1] PCH 1 ★

Pump curve head for point 1.

Head entered at point 1 (for HQ curve).

This parameter ca be accessed if **[Mode]** PCM is set to **[HQ]** H9 or **[PHQ]** PH9.

Setting	Description
0...32,767	Setting range according to **[P sensor unit]** SuPr **Factory setting**: 0

[Power 1] PCP 1★

Pump curve power for point 1.

Mechanical power entered at point 1 (for PQ curve).

This parameter ca be accessed if **[Mode]** PCM is set to **[PQ]** PQ or **[PHQ]** PHQ.

Setting ❮❯	Description
0...32,767	Setting range according to **[Motor Standard]** bFr **Factory setting**: 0

[Flow 2] PCQ2★

Pump curve flow rate for point 2.

Flow rate entered at point 2 (for HQ and PQ curves).

This parameter can be accessed if **[Mode]** PCM is not set to **[No]** no.

Setting ❮❯	Description
0...32,767	Setting range according to **[Flow rate unit]** SuFr **Factory setting**: 0

[Head 2] PCH2★

Pump curve head for point 2.

Head entered at point 2 (for HQ curve).

Setting ❮❯	Description
0...32,767	Setting range according to **[P sensor unit]** SuPr **Factory setting**: 0

[Power 2] PCP2★

Pump curve power for point 2.

Mechanical power entered at point 2 (for PQ curve).

This parameter ca be accessed if **[Mode]** PCM is set to **[PQ]** PQ or **[PHQ]** PHQ.

Setting ❮❯	Description
0...32,767	Setting range according to **[Motor Standard]** bFr **Factory setting**: 0

[Flow 3] PCQ3★

Pump curve flow rate for point 3.

Flow rate entered at point 3 (for HQ and PQ curves).

This parameter can be accessed if **[Mode]** PCM is not set to **[No]** no.

Setting ❮❯	Description
0...32,767	Setting range according to **[Flow rate unit]** SuFr **Factory setting**: 0

[Head 3] PCH3★

Pump curve head for point 3.

Head entered at point 3 (for HQ curve).

This parameter ca be accessed if **[Mode]** PCM is set to **[HQ]** HQ or **[PHQ]** PHQ.

Setting	Description
0...32,767	Setting range according to **[P sensor unit]** SUPr **Factory setting**: 0

[Power 3] PCP3★

Pump curve power for point 3.

Mechanical power entered at point 3 (for PQ curve).

This parameter ca be accessed if **[Mode]** PCM is set to **[PQ]** PQ or **[PHQ]** PHQ.

Setting	Description
0...32,767	Setting range according to **[Motor Standard]** bFr **Factory setting**: 0

[Flow 4] PCQ4★

Pump curve flow rate for point 4.

Flow rate entered at point 4 (for HQ and PQ curves).

This parameter can be accessed if **[Mode]** PCM is not set to **[No]** no.

Setting	Description
0...32,767	Setting range according to **[Flow rate unit]** SUFr **Factory setting**: 0

[Head 4] PCH4★

Pump curve head for point 4.

Head entered at point 4 (for HQ curve).

This parameter ca be accessed if **[Mode]** PCM is set to **[HQ]** HQ or **[PHQ]** PHQ.

Setting	Description
0...32,767	Setting range according to **[P sensor unit]** SUPr **Factory setting**: 0

[Power 4] PCP4★

Pump curve power for point 4.

Mechanical power entered at point 4 (for PQ curve).

This parameter ca be accessed if **[Mode]** PCM is set to **[PQ]** PQ or **[PHQ]** PHQ.

Setting	Description
0...32,767	Setting range according to **[Motor Standard]** bFr **Factory setting**: 0

[Flow 5] PC95 ★

Pump curve flow rate for point 5.

Flow rate entered at point 5 (for HQ and PQ curves).

This parameter can be accessed if **[Mode]** PCM is not set to **[No]** no.

Setting	Description
0...32,767	Setting range according to **[Flow rate unit]** SuFr **Factory setting**: 0

[Head 5] PCH5 ★

Pump curve head for point 5.

Head entered at point 5 (for HQ curve).

This parameter can be accessed if **[Mode]** PCM is set to **[HQ]** HQ or **[PHQ]** PHQ.

Setting	Description
0...32,767	Setting range according to **[P sensor unit]** SuPr **Factory setting**: 0

[Power 5] PCP5 ★

Pump curve power for point 5.

Mechanical power entered at point 5 (for PQ curve).

This parameter can be accessed if **[Mode]** PCM is set to **[PQ]** PQ or **[PHQ]** PHQ.

Setting	Description
0...32,767	Setting range according to **[Motor Standard]** bFr **Factory setting**: 0

[Pump Op Point Filter] WPXF ★

Pump operating point filter.

This parameter can be accessed if **[Mode]** PCM is not set to **[No]** no.

Setting	Description
0.00 s...60.00 s	Setting range **Factory setting**: 1.00 s

Section 8.13
[Pump functions] - [Sensorless flow estimation]

[Flow estimation] SFE - Menu

Access

[Complete settings] ➞ [Pump functions] ➞ [Flow estimation]

About This Menu

This function allows the estimation of the flow of the pump using the predefined pump curves HQ or PQ set in the pump characteristics.

The PQ curve shall be used if there is no pressure sensor on the system.

The HQ curve shall be used if inlet and/or outlet pressure feedbacks are available (or a differential value).

The curves shall be set in the pump characteristic functions before setting the sensorless flow estimation function.

The figure below shows the calculating area (1) using the HQ curve.

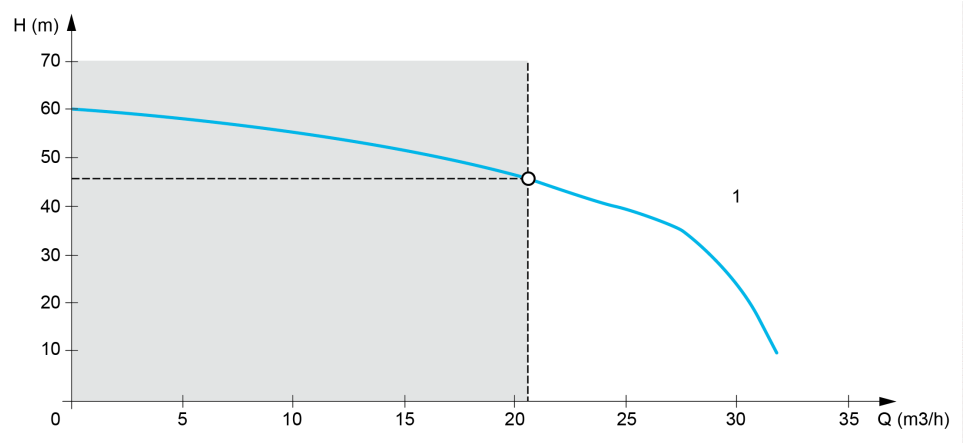

The figure below shows the calculating area (2) using the PQ curve.

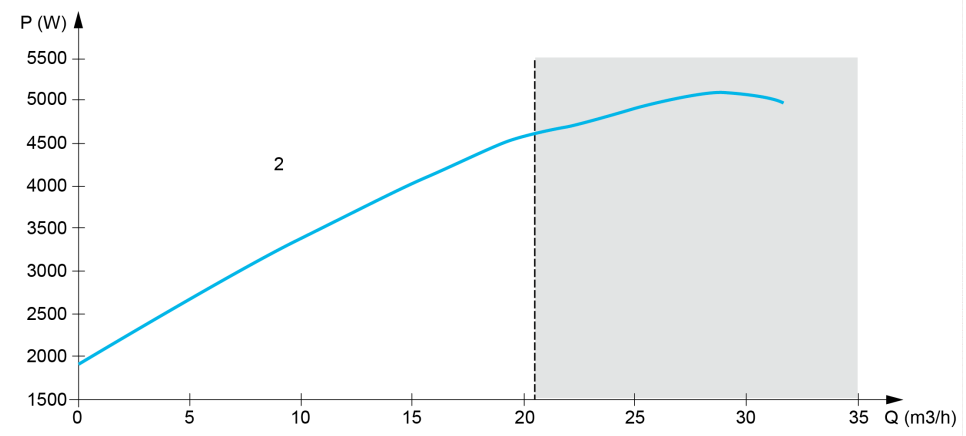

Using the PQ curve, it is necessary to calibrate the function with:

- **[Power Dynamic Gain]** PEG to define a correction gain applied to the estimated power from the drive
- **[Power Static Offset]** PEo to define a correction offset applied to the estimated power from the drive
- **[Liquid Density]** rHo is the density of the fluid to be pumped

Using the HQ curve, it is necessary to enter the data related to the application:

- **[Liquid Density]** r H o is the density of the fluid to be pumped
- **[Head Dynamic Gain]** H E G is the correction gain, modeling the dynamical head losses between the two pressure sensors
- **[Head Static Offset]** H E o is a correction offset applied to the head provided by the pump

[Flow Estimation Mode] F E M

Flow estimation mode.

Setting	Code / Value	Description
[No]	n o	Function not activated **Factory setting**
[HQ]	H Q	H, Q data is activated
[PQ]	P Q	P, Q data is activated

[Head Dynamic Gain] H E G ★

Head dynamic gain.

This parameter can be accessed if **[Flow Estimation Mode]** F E M is set to **[HQ]** H Q.

Setting	Description
-100.0...100.0%	Setting range **Factory setting**: 0.0%

[Head Static Offset] H E o ★

Head static offset.

This parameter can be accessed if **[Flow Estimation Mode]** F E M is set to **[HQ]** H Q.

Setting	Description
-100.0...100.0%	Setting range **Factory setting**: 0.0%

[Power Dynamic Gain] P E G ★

Power dynamic gain.

This parameter can be accessed if **[Flow Estimation Mode]** F E M is set to **[PQ]** P Q.

Setting	Description
-100.0...100.0%	Setting range **Factory setting**: 0.0%

[Power Static Offset] P E o ★

Power static offset.

This parameter can be accessed if **[Flow Estimation Mode]** F E M is set to **[PQ]** P Q.

Setting	Description
-100.0...100.0%	Setting range **Factory setting**: 0.0%

[Pump Flow] F S 2 u

Pump flow sensor value.

Setting	Description
-32,767...32,767	Setting range **Factory setting**: -

[Flow Estimated] S L F u ★

Estimated flow value.

This parameter can be accessed if **[Flow Estimation Mode]** F E M is not set to **[No]** n o

Setting	Description
Value in application customer unit	Setting range **Factory setting: -**

[Pump Op Point Filter] W P X F ★

Pump operating point filter.

This parameter can be accessed if **[Mode]** P C M is not set to **[No]** n o.

Setting	Description
0.00 s...60.00 s	Setting range **Factory setting**: 1.00 s

Section 8.14
[Pump functions] - [dP/Head Correction]

[dP/Head Correction] dPHC - Menu

Access

[Complete settings] ➡ **[Pump functions]** ➡ **[dP/Head Correction]**

This menu can be accessed if:
- **[Mode]** PCM is set to **[HQ]** HQ or **[PHQ]** PHQ and,
- **[OutletPres Assign]** PS2A is not set to **[Not Configured]** no.

About This Menu

This function allows adjustment of the estimated delta pressure and the pump head using the predefined pump curves HQ or PHQ set in the pump characteristics and the outlet pressure sensor assigned.

The curves shall be set in the pump characteristics functions before setting the function

[Head Dynamic Gain] HEG ★

Head dynamic gain.

This parameter can be accessed if **[Flow Estimation Mode]** FEM is set to **[HQ]** HQ.

Setting	Description
-100.0...100.0%	Setting range **Factory setting**: 0.0%

[Head Static Offset] HEo ★

Head static offset.

This parameter can be accessed if **[Flow Estimation Mode]** FEM is set to **[HQ]** HQ.

Setting	Description
-100.0...100.0%	Setting range **Factory setting**: 0.0%

[Est. Pump dP] SLdP ★

Estimated Pump delta pressure value

This parameter can be accessed if **[OutletPres Assign]** PS2A is not set to **[Not Configured]** no.

Setting	Description
-32,767...32,767	Setting range according to **[P sensor unit]** SuPr **Factory setting: –**

[Est. Pump Head] SLHV ★

Estimated Pump head value

This parameter can be accessed if **[OutletPres Assign]** PS2A is not set to **[Not Configured]** no.

Setting	Description
-32,767...32,767	Setting range according to **[P sensor unit]** SuPr **Factory setting: –**

[Pump Op Point Filter] WPXF ★

Pump operating point filter.

This parameter can be accessed if **[Mode]** PCM is not set to **[No]** no.

Setting	Description
0.00 s...60.00 s	Setting range **Factory setting**: 1.00 s

Section 8.15
[Pump functions] - [Pump start stop]

[Pump start stop] PSt - Menu

Access

[Complete settings] ➡ **[Pump functions]** ➡ **[Pump start stop]**

About This Menu

This function defines how the acceleration and deceleration are controlled during start and stop of the pump.

The pump working area is within the speed range **[Low Speed]** LSP - **[High Speed]** HSP.

The minimum speed is provided by the pump manufacturer according to the application.

Running below the minimum speed and/or starting the pump with a long acceleration ramp time has an impact on the lubrication of the seal, on the cooling of the impeller and the bearings.

A specific check-valve deceleration ramp is available to reduce any large variation of pressure that can generate an instability of the valve.

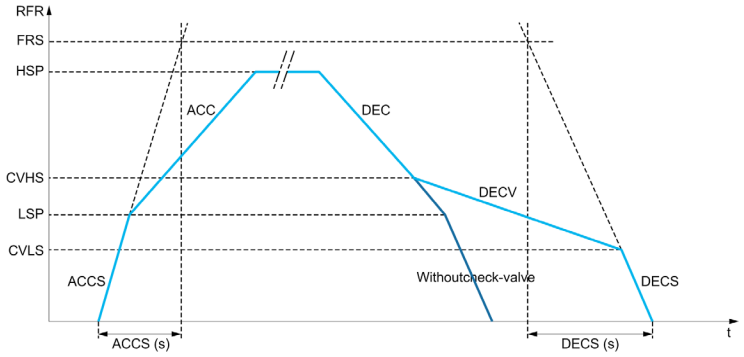

When the pump starts, the pump accelerates up to **[Low Speed]** LSP according to **[Start Accel Ramp]** RCCS.When the pump speed is above **[Low Speed]** LSP, the pump acceleration and deceleration are managed according to **[Acceleration]** RCC and **[Deceleration]** dEC if no other function is activated.

When the pump stops:

- The pump decelerates down to **[Check Valve Spd 2]** CVHS according to **[Deceleration]** dEC
- The pump decelerates from **[Check Valve Spd 2]** CVHS to **[Check Valve Spd 1]** CVLS according to **[Dec. Check Valve]** dECV
- The pump decelerates from **[Check Valve Spd 1]** CVLS to zero speed according to **[Deceleration on Stop]** dECS

If **[Start Accel Ramp]** RCCS = 0, the start ramp is ignored and **[Acceleration]** RCC is used to start the pump.

If **[Dec. Check Valve]** dECV = 0, the check-valve ramp is ignored and is used to decelerate up to **[Low Speed]** LSP, then **[Deceleration on Stop]** dECS is used (see below).

If **[Deceleration on Stop]** dECS = 0, the normal deceleration **[Deceleration]** dEC is used to stop the pump.

[Low Speed] LSP

Motor frequency at low speed.

Setting	Description
0...**[High Speed]** HSP	Setting range **Factory setting**: 0 Hz

[High Speed] HSP

Motor frequency at high speed.

Setting	Description
[Low Speed] LSP...**[Max Frequency]** tFr	Setting range **Factory setting**: 50.0 Hz

[Acceleration] ACC

Time to accelerate from 0 to the **[Nominal Motor Freq]** Fr5.

To have repeatability in ramps, the value of this parameter must be set according to the possibility of the application.

Setting	Description
0.00...6,000.00 s (1)	Setting range **Factory setting**: 10.00 s
(1) Range 0.00 to 99.99 s or 0.0 to 999.9 s or 0 to 6,000 according to **[Ramp increment]** inr	

[Deceleration] dEC

Time to decelerate from the **[Nominal Motor Freq]** Fr5 to 0.

To have repeatability in ramps, the value of this parameter must be set according to the possibility of the application.

Setting	Description
0.00...6,000.00 s (1)	Setting range **Factory setting**: 10.00 s
(1) Range 0.00 to 99.99 s or 0.0 to 999.9 s or 0 to 6,000 according to **[Ramp increment]** inr	

[Start Accel Ramp] ACC5

Acceleration on start.

Setting	Description
[No] no...6,000 s (1)	Setting range **Factory setting**: **[No]** no
(1) Range 0.00 to 99.99 s or 0.0 to 999.9 s or 0 to 6,000 according to **[Ramp increment]** inr	

[Final Dec. Ramp] dEC5

Deceleration on stop.

Setting	Description
[No] no...6,000 s (1)	Setting range **Factory setting**: **[No]** no
(1) Range 0.00 to 99.99 s or 0.0 to 999.9 s or 0 to 6,000 according to **[Ramp increment]** inr	

[Dec. Check Valve] dECV

Deceleration while check valve is closing (smooth).

Setting	Description
[No] no...6,000 s (1)	Setting range **Factory setting**: **[No]** no
(1) Range 0.00 to 99.99 s or 0.0 to 999.9 s or 0 to 6,000 according to **[Ramp increment]** inr	

[Check Valve Spd 1] CVLS ★

Speed level up to which check valve ramp is used.

This parameter can be accessed if **[Dec. Check Valve]** dECV is not set to 0.

Setting	Description
0...**[Check Valve Spd 2]** CVHS	Setting range **Factory setting**: 0 Hz

[Check Valve Spd 2] CVHS ★

Speed level from which check valve ramp is used.

This parameter can be accessed if **[Dec. Check Valve]** dECV is not set to 0.

Setting	Description
[Check Valve Spd 1] CVLS...HSP	Setting range **Factory setting**: 0 Hz

[Ref Freq Template] bSP

Low speed management (template).

This parameter defines how the speed reference is taken into account, for analog inputs and pulse input only. In the case of the PID controller, this is the PID output reference.

The limits are set by the **[Low speed]** LSP and **[High speed]** HSP parameters

Setting	Code / Value	Description
[Standard]	bSd	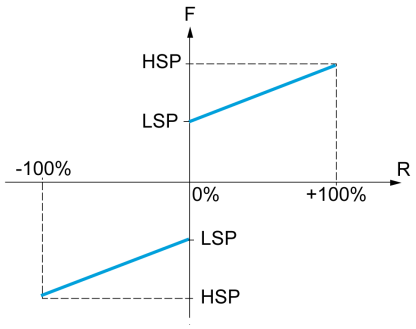 **F** Frequency **R** Reference At zero reference the frequency = LSP **Factory setting**
[Pedestal]	bLS	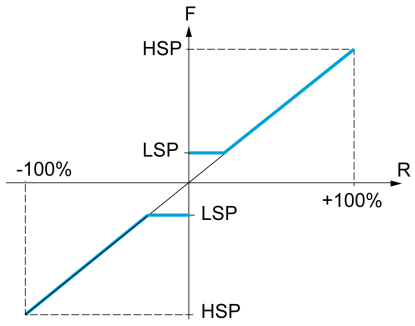 **F** Frequency **R** Reference At reference = 0 to LSP the frequency = LSP

Setting	Code / Value	Description
[Deadband]	bn5	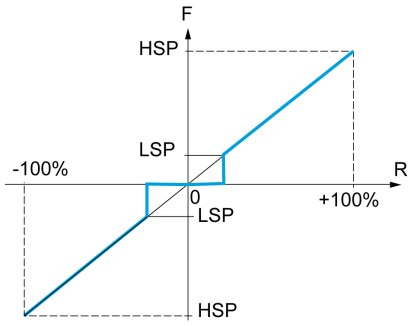 **F** Frequency **R** Reference At reference = 0 to LSP the frequency = 0
[Deadband at 0%]	bn50	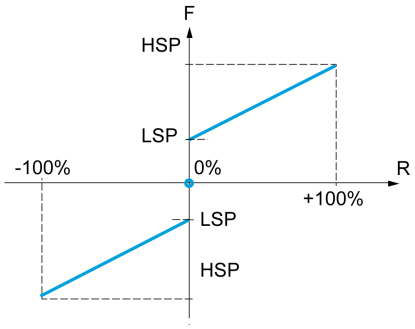 **F** Frequency **R** Reference This operation is the same as **[Standard]** b5d, except that in the following cases at zero reference, the frequency = 0: The signal is less than **[Min nvalue]**, which is greater than 0 (example: 1 Vdc on a 2–10 Vdc input) The signal is greater than **[Min nvalue]**, which is greater than **[Max value]** (example: 11 Vdc on a 10–0 Vdc input). If the input range is configured as “bidirectional”, operation remains identical to **[Standard]** b5d.

Section 8.16
[Pump functions] - [Pipe fill]

What Is in This Section?

This section contains the following topics:

Topic	Page
[Pipe fill] *P F ,* **-** Menu	355
[Pipe fill] *P F ,* **-** Menu	357

[Pipe fill] PF ı - Menu

Access

[Complete settings] ➡ **[Pump functions]** ➡ **[Pipe fill]**

About This Menu

This menu can be accessed if **[Application Selection]** APPL is not set to **[Pump Level Control]** LEVEL or **[Generic Fan Control]** FAn.

The pipe fill function helps to prevent a water hammer effect from happening in the pipes when a system is filled in too quickly.

The function covers the horizontal pipe applications which are pressure-controlled by the PID function.

The pipe fill function can always be enabled or conditioned by a digital input (or a control bit in the I/O profile).

At the first start command in automatic mode, the system enters the pipe fill mode.

At next start commands, the drive will enter the pipe fill mode if the system pressure feedback is lower than **[Pipe Fill Pressure]** PFHP.

Each time the drive wakes-up, the drive enters the pipe fill mode if **[Pipe Fill on Wake Up]** PFWu is set to **[Yes]** YES.

The system remains in the horizontal pipe fill at **[Pipe Fill Speed]** PFHS speed until:

- the pressure feedback becomes greater than **[Pipe Fill Pressure]** PFHP parameter, or
- the system has been in the pipe fill for longer than **[Pipe Fill Time]** PFHt time.

If one of these conditions is met, the system enters the automatic pressure regulation mode.

NOTE: If **[Pipe Fill Time]** PFHt is set to 0, the system never enter the Pipe fill mode.

To set up this function, it is recommended to set both **[Pipe Fill Speed]** PFHS and **[Pipe Fill Time]** PFHt according to the maximum quantity of liquid to fill in the empty system.

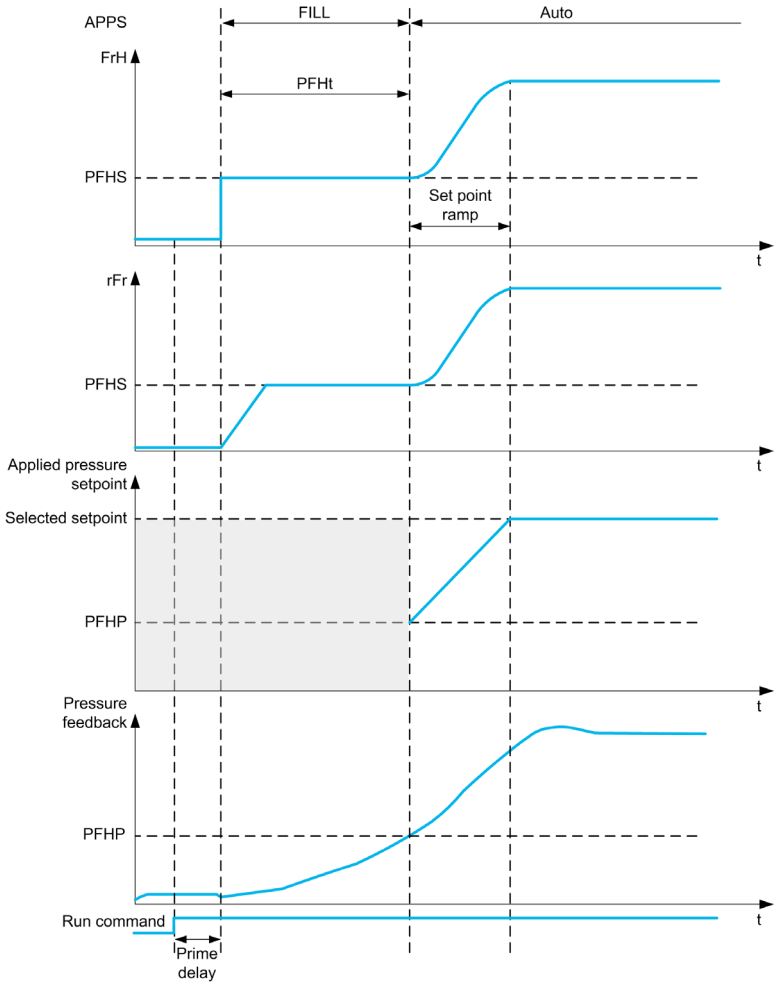

[Activation Mode] PFM

Pipe fill activation mode.

Setting	Code / Value	Description
[No]	nO	Pipes fill disabled **Factory setting**
[Feedback]	FbK	Pipe fill on PID feedback This selection can be accessed if **[Type of control]** tOCt is set to **[Pressure]** PrESS and **[PID feedback]** PiF is not set to **[Not Configured]** nO.
[Outlet Pressure]	PS2	Pipe fill on outlet pressure

[OutletPres Assign] PS2A ★

Outlet pressure sensor assignment.

This parameter can be accessed if **[Activation Mode]** PFM is set to **[Outlet Pressure]** PS2.

Setting	Code / Value	Description
[Not Configured]	nO	Not assigned **Factory setting**
[AI1]...**[AI3]**	AI1...AI3	Analog input AI1...AI3
[AI4]...**[AI5]**	AI4...AI5	Analog input AI4...AI5 if VW3A3203 I/O extension module has been inserted
[AI Virtual 1]...**[AI Virtual 3]**	AIV1...AIV3	Virtual analogic input 1...3
NOTE: For sensor configuration, refer to section **[Sensors assignment]** *(see page 216)*.		

[Pipe fill] PF ı - Menu

Access

[Complete settings] ➡ **[Pump functions]** ➡ **[Pipe fill]**

[Activation Source] PFEc ★

Pipe fill activation source.

This parameter can be accessed if **[Activation Mode]** PFM is not set to **[No]** no.

Setting	Code / Value	Description
[Not Assigned]	no	Not assigned **Factory setting**
[DI1]...**[DI6]**	LI1...LI6	Digital input DI1...DI6
[DI11]...**[DI16]**	LI11...LI16	Digital input DI11...DI16 if VW3A3203 I/O extension module has been inserted
[CD00]...**[CD10]**	Cd00...Cd10	Virtual digital input CMD.0...CMD.10 in **[I/O profile]** IO configuration
[CD11]...**[CD15]**	Cd11...Cd15	Virtual digital input CMD.11...CMD.15 regardless of configuration
[C101]...**[C110]**	C101...C110	Virtual digital input CMD1.01...CMD1.10 with integrated Modbus Serial in **[I/O profile]** IO configuration
[C111]...**[C115]**	C111...C115	Virtual digital input CMD1.11...CMD1.15 with integrated Modbus Serial regardless of configuration
[C201]...**[C210]**	C201...C210	Virtual digital input CMD2.01...CMD2.10 with CANopen® fieldbus module in **[I/O profile]** IO configuration
[C211]...**[C215]**	C211...C215	Virtual digital input CMD2.11...CMD2.15 with CANopen® fieldbus module regardless of configuration
[C301]...**[C310]**	C301...C310	Virtual digital input CMD3.01...CMD3.10 with a fieldbus module in **[I/O profile]** IO configuration
[C311]...**[C315]**	C311...C315	Virtual digital input CMD3.11...CMD3.15 with a fieldbus module regardless of configuration
[C501]...**[C510]**	C501...C510	Virtual digital input CMD5.01...CMD5.10 with integrated Ethernet Modbus TCP in **[I/O profile]** IO configuration
[C511]...**[C515]**	C511...C515	Virtual digital input CMD5.11...CMD5.15 with integrated Ethernet Modbus TCP regardless of configuration
[DI1 (Low level)]...**[DI6 (Low level)]**	LIL...LGL	Digital input DI1...DI6 used at low level

[Pipe Fill on Wake Up] PFWu ★

Pipe fill cycle on wake-up.

This parameter can be accessed if:

- **[Access Level]** LAC is set to **[Expert]** EPr.
- **[Activation Mode]** PFM is not set to **[No]** no.

Setting	Code / Value	Description
[No]	no	No pipe fill cycle on wake-up
[Yes]	YES	A pipe fill cycle operates on wake-up **Factory setting**

[Pipe Fill SPeed] PFHS ★

Pipe fill speed.

This parameter can be accessed if

- **[Activation Mode]** PFM is not set to **[No]** no, and
- **[Activation Source]** PFEc is not set to **[Not Assigned]** no.

Setting ( )	Description
0.0...500.0 Hz	Setting range **Factory setting**: 25.0 Hz

[Pipe Fill Pressure] PFHP ★

Pipe fill pressure level.

This parameter can be accessed if

- **[Activation Mode]** PFM is not set to **[No]** no, and
- **[Activation Source]** PFEc is not set to **[Not Assigned]** no.

Setting ( )	Description
0...32,767	Setting range according to **[P sensor unit]** SuPr. **Factory setting**: 0

[Pipe Fill Time] PFHt ★

Pipe fill time.

This parameter can be accessed if

- **[Activation Mode]** PFM is not set to **[No]** no, and
- **[Activation Source]** PFEc is not set to **[Not Assigned]** no.

Setting ( )	Description
0...32,767 s	Setting range **Factory setting**: 10 s

Section 8.17
[Pump functions] - [Friction loss compensation]

What Is in This Section?

This section contains the following topics:

Topic	Page
[Friction loss comp] F L C - Menu	360
[Friction loss comp] F L C - Menu	362

[Friction loss comp] FLC- Menu

Access

[Complete settings] ➡ **[Pump functions]** ➡ **[Friction loss comp]**

This menu can be accessed if:
- **[Type of control]** tOCt is set to **[Pressure]** PrESS and,
- **[PID feedback]** PIF is not set to **[Not Configured]** nO.

About This Menu

This function monitors the system flow and displays an estimation of the head losses of the application.

This function can compensate these head losses by modifying the pressure set point. It helps to maintain a constant pressure at usage point whatever the flow demand.

This monitoring function is at station level and not a pump level only.

This function requires a flow sensor to monitor the flow of the system.

The dynamic estimation of the losses is based on values measured by the application:
- The static losses **[Static Compensation]** FLHO measured at no flow between the pumping point and the usage point.
- The dynamic losses, based on an application working point (Flow **[Flow at Point 1]** FLq1; Head **[Comp. at Point 1]** FLH1) measured at nominal flow of the system.

If the function is set to compensation mode, the pressure set point is modified according to the estimated pressure drop.

NOTE: At low flow working point, as dynamic head losses are lower than at the nominal working point, this function reduces the pressure set point and thus allows saving electrical power.

[Mode Selection] FLCM★

Mode selection.

Setting	Code / Value	Description
[Inactive]	nO	Inactive **Factory setting**
[Display]	MOn	Monitoring only: pressure drop is not used for compensation
[Compensation]	CoMP	Compensation: pressure drop is used to correct pressure set-point

[Inst. Flow Assign.] FSIA

Installation flow sensor assignment.

This parameter can be accessed if **[Mode Selection]** FLCM is not set to **[No]** nO.

Setting	Code / Value	Description
[Not Configured]	nO	Not assigned **Factory setting**
[AI1]...**[AI3]**	AI1...AI3	Analog input AI1...AI3
[AI4]...**[AI5]**	AI4...AI5	Analog input AI4...AI5 if VW3A3203 I/O extension module has been inserted
[AI Virtual 1]...**[AI Virtual 3]**	AIV1...AIV3	Virtual analogic input 1...3
[Di5 PulseInput Assignment]...**[Di6 PulseInput Assignment]**	PI5...PI6	Digital input DI5...DI6 used as pulse input
[Est. Pump Flow]	SLPF	Sensor less estimated flow
NOTE: For sensor configuration, refer to section **[Sensors assignment]** *(see page 216)*.		

Setting	Code / Value	Description
[Est. System Flow]	SLSF	Estimated system flow This selection is only possible if **[Pump System Archit]** MPSA is set to **[Multi Drives]** nVSd or **[Multi Masters]** nVSdr **NOTE:** To use this selection, all the pump characteristics of the system must be configured.
NOTE: For sensor configuration, refer to section **[Sensors assignment]** *(see page 216)*.		

[Friction loss comp] F L C - Menu

Access

[Complete settings] ➡ **[Pump functions]** ➡ **[Friction loss comp]**

About This Menu

The following parameters can be accessed if **[Mode Selection]** F L C M is not set to **[Inactive]** n o and **[Inst. Flow Assign.]** F S I A is set to **[Not Configured]** n o.

[Static Compensation] F L H O ★

Static compensation.

Setting ❮❯	Description
0...32,767	Setting range **Factory setting**: 0

[Flow at Point 1] F L 9 I ★

Flow at point 1.

Setting ❮❯	Description
0...32,767	Setting range **Factory setting**: 0

[Comp. at Point 1] F L H I ★

Compensation at point 1.

Setting ❮❯	Description
0...32,767	Setting range **Factory setting**: 0

[Alpha] F L d A ★

Alpha.

This parameter can be accessed if **[Access Level]** L A C is set to **[Expert]** E P r.

Setting ❮❯	Description
0.0...2.0	Setting range **Factory setting**: 2.0

[Delta Pressure] F L P d ★

Friction loss delta pressure.

Setting ❮❯	Description
-32,768...32,767	Setting range **Factory setting**: _

Section 8.18
[Pump functions] - [Jockey pump]

[Jockey pump] JKP - Menu

Access

[Complete settings] ➡ **[Pump functions]** ➡ **[Jockey pump]**

About This Menu

This menu can be accessed if:
- **[Type of control]** tOCt is set to **[PRESSURE]** PrES, and
- **[PID feedback]** PiF is assigned, and
- **[Sleep Detect Mode]** SLPM is not set to **[No]** no.

This function allows managing a jockey pump.

The jockey pump can be:
- A direct on-line pump in parallel to the variable speed pump, controlled by a digital output, or
- The variable speed pump used at fixed speed.

The jockey pump works in on/off control between two pressure set points.

The jockey pump is used during sleep period to maintain the service pressure.

From an energy efficiency point of view, it is better to start and stop a fixed speed pump than running the variable speed pump continuously at low speed.

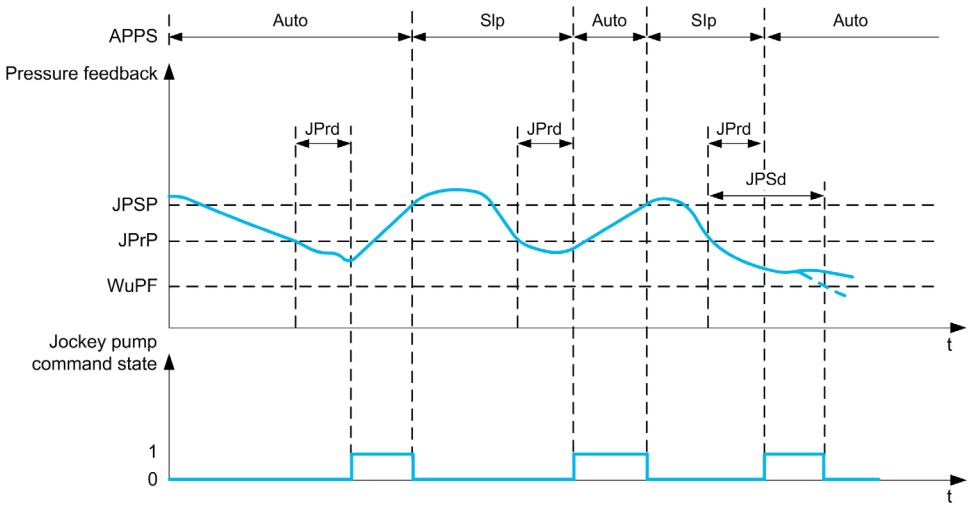

During sleep mode, the pressure feedback is still monitored:
- If the pressure feedback falls below the jockey start pressure **[Minimum Pressure]** JPrP during a time longer than **[Delay to Start]** JPrd, the jockey pump is started;
- If the pressure feedback is over jockey stop pressure **[Maximum Pressure]** JPSP, the jockey pump is stopped

When the jockey pump is started, the pressure feedback is still monitored:
- If the pressure feedback stays below the jockey start pressure **[Maximum Pressure]** JPSP for longer than the wake-up delay **[Wake Up Delay]** JPWd, it means that the request is greater than what jockey pump can supply alone. The system wakes up and exit from sleep mode.
- If the pressure feedback falls below the wake-up pressure **[Wake UP Process level]** WuPF, the system wakes up and exit from sleep mode.

[Jockey Selection] JP

Select the jockey pump.

Setting	Code / Value	Description
[No]	nO	Not assigned **Factory setting**
[R2]...[R3]	r2...r3	Relay output R2...R3
[R4]...[R6]	r4...r6	Relay output R4...R6 if VW3A3204 relay output option module has been inserted
[DQ11 Digital Output]...[DQ12 Digital Output]	dO11...dO12	Digital output DQ11...DQ12 if VW3A3203 I/O extension module has been inserted
[VSP]	VSP	Variable speed pump controlled by the drive
[R61]...[R66]	r61...r66	Relay R61 ...R66 **NOTE:** This selection can be accessed on ATV660 and ATV680 equipped with Cabinet IO

[Minimum Pressure] JPrP ★

Pressure threshold to start the jockey pump.

This parameter can be accessed if **[Jockey Selection]** JP is not set to **[No]** nO.

Setting ( )	Description
0...**[Maximum Pressure]** JPSP	Setting range **Factory setting**: 0

[Delay to Start] JPrd ★

Delay to start the jockey pump.

This parameter can be accessed if **[Jockey Selection]** JP is not set to **[No]** nO.

Setting ( )	Description
0...3,600 s	Setting range **Factory setting**: 0 s

[Maximum Pressure] JPSP ★

Pressure threshold to stop the jockey pump.

This parameter can be accessed if **[Jockey Selection]** JP is not set to **[No]** nO.

Setting ( )	Description
[Minimum Pressure] JPrP...32,767	Setting range **Factory setting**: 0

[Wake Up Delay] JPWd ★

Delay to wake up the system when pressure feedback stays low.

This parameter can be accessed if **[Jockey Selection]** JP is not set to **[No]** nO.

Setting ( )	Description
[No] nO...3,600 s	Setting range **Factory setting**: nO

[Reference Speed] JPr5 ★

Pump speed when **[VSP]** VSP is selected as jockey pump.

This parameter can be accessed if **[Jockey Selection]** JP is set to **[VSP]** VSP.

Setting ( )	Description
[Low Speed] LSP...**[High Speed]** HSP	Setting range **Factory setting**: **[Maximum Pressure]** JPSP

Section 8.19
[Pump functions] - [Priming pump ctrl]

What Is in This Section?

This section contains the following topics:

Topic	Page
[Priming pump ctrl] *P P C* - Menu	367
[Priming pump ctrl] *P P C* - Menu	369

[Priming pump ctrl] PPC - Menu

Access

[Complete settings] ➡ [Pump functions] ➡ [Priming pump ctrl]

About This Menu

This function manages a priming pump.

The priming pump is placed at the inlet of the variable speed lead pump, controlled with a digital output.

The priming pump is used to maintain the inlet pressure to the lead pump.

This is done by running the priming pump before the main pump starts. Nevertheless, it is recommended to enable the dry-Run monitoring function.

The priming pumps keep pumping as long as the lead pump is active.

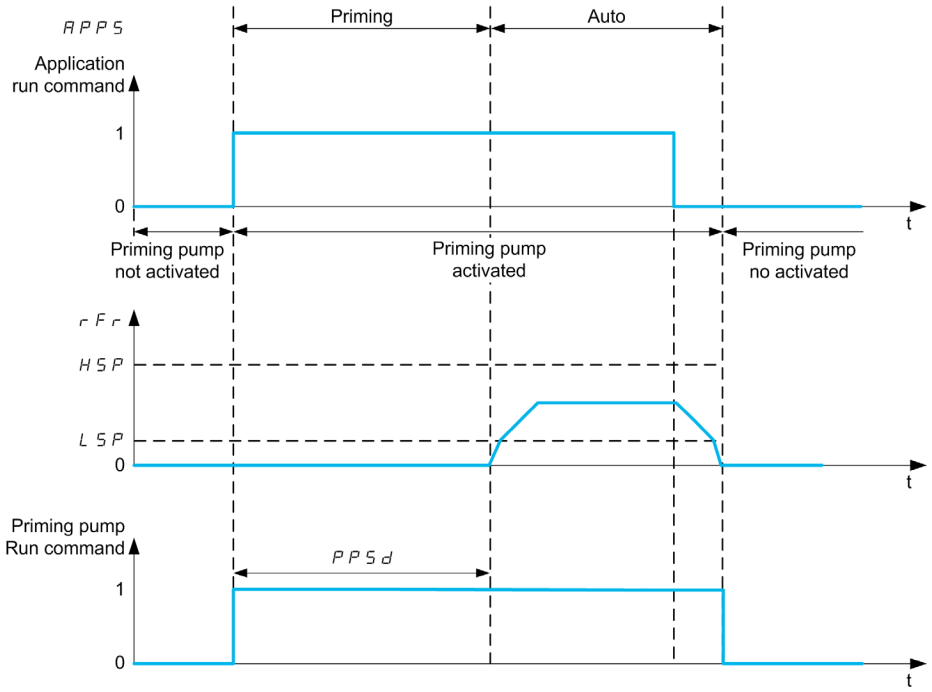

If the priming pump function is activated and the conditions to start the lead pump are present, the priming pump is started immediately while the lead pump will be started when one of the primed conditions is met :

- After the **[Priming Time]** PPSd delay
- When the digital input assigned with **[Primed Switch Assign]** PPWA is active for longer than **[Primed Condition Delay]** PPFd.
- When the analog input assigned with **[InletPres Assign]** PSIA is over **[Primed Inlet Level]** PPIL for longer than **[Primed Condition Delay]** PPFd.

If the priming pump is active, it is stopped when the lead pump is stopped, at the end of the deceleration phase.

When the system goes to the sleep mode, the priming pump is also deactivated.

When the system wakes up, the priming pump is immediately activated while the lead pump will be started when one of the primed conditions is met.

[Priming Pump Assign] PPoA

Select the priming pump.

Setting	Code / Value	Description
[No]	nO	Not assigned **Factory setting**
[R2]...[R3]	r2...r3	Relay output R2...R3
[R4]...[R6]	r4...r6	Relay output R4...R6 if VW3A3204 relay output option module has been inserted
[DQ11 Digital Output]...[DQ12 Digital Output]	dO11...dO12	Digital output DQ11...DQ12 if VW3A3203 I/O extension module has been inserted
[R61]…[R66]	r61...r66	Relay R61 …R66 **NOTE:** This selection can be accessed on ATV660 and ATV680 equipped with Cabinet IO

[Primed Switch Assign] PPWA ★

Primed condition: external switch assignment.

This parameter can be accessed if **[Priming Pump Assign]** PPoA is not set to **[No]** nO.

Setting	Code / Value	Description
[Not Assigned]	nO	Not assigned **Factory setting**
[DI1]...[DI6]	LI1...LI6	Digital input DI1...DI6
[DI11]...[DI16]	LI11...LI16	Digital input DI11...DI16 if VW3A3203 I/O extension module has been inserted
[DI1 (Low level)]...[DI6 (Low level)]	LIL...LGL	Digital input DI1...DI6 used at low level

[Primed Inlet Level] PP iL ★

Primed condition: inlet pressure detection level.

This parameter can be accessed if **[Priming Pump Assign]** PPoA is not set to **[No]** nO.

Setting	Code / Value	Description
[No]	0	Function disabled **Factory setting**
-3276.7...3276.7		Setting range according to the configuration done in the **[Define system units]** SUC - menu

[InletPres Assign] PSIA ★

Inlet pressure sensor assignment.

This parameter can be accessed if:

- **[Priming Pump Assign]** PPoA is not set to **[No]** nO.
- **[Primed Inlet Level]** PPiL is not set to **[No]** 0.

Setting	Code / Value	Description
[Not Configured]	nO	Not assigned **Factory setting**
[AI1]...[AI3]	AI1...AI3	Analog input AI1...AI3
[AI4]...[AI5]	AI4...AI5	Analog input AI4...AI5 if VW3A3203 I/O extension module has been inserted
[AI Virtual 1]...[AI Virtual 3]	AIV1...AIV3	Virtual analogic input 1...3
NOTE: For sensor configuration, refer to section **[Sensors assignment]** *(see page 216)*.		

[Priming pump ctrl] PPC - Menu

Access

[Complete settings] ➡ **[Pump functions]** ➡ **[Priming pump ctrl]**

[Primed Condition Delay] PPFd ★

Primed condition delay.

This parameter can be accessed if:

- **[Priming Pump Assign]** PPoA is not set to **[No]** no.
- **[Primed Switch Assign]** PPWA is not set to **[Not Assigned]** no.
- **[Primed Inlet Level]** PP iL is not set to **[No]** 0.

Setting ❮❯	Description
0...60 s	Setting range **Factory setting**: 0 s

[Priming Time] PPSd ★

Delay before starting the lead pump.

This parameter can be accessed if **[Priming Pump Assign]** PPoA is not set to **[No]** no.

Setting ❮❯	Description
0...3,600 s	Setting range **Factory setting**: 30 s

Section 8.20
[Pump functions] - [Flow limitation]

What Is in This Section?

This section contains the following topics:

Topic	Page
[Flow limitation] *F L Π -* Menu	371
[Flow limitation] *F L Π -* Menu	372

[Flow limitation] F L N - Menu

Access

[Complete settings] ➡ [Pump functions] ➡ [Flow limitation]

About This Menu

This function allows you to limit the flow of the system to a configured value (according to local requirements, regulation, or availability of water).

This monitoring function is at station level and not a pump level only.

This function requires a flow sensor to monitor the flow of the system.

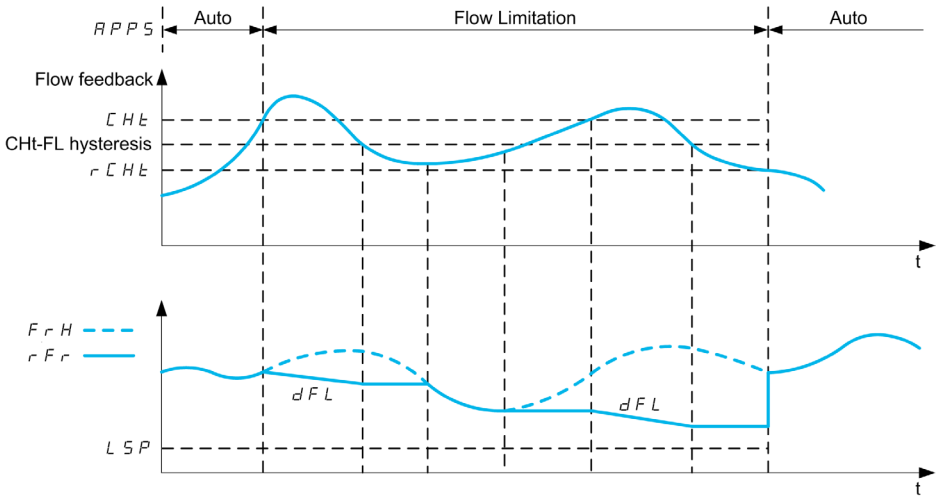

When the flow feedback is higher than the high flow **[Flow Lim Thd Active]** C H t , the pump reduces the speed set point according to the deceleration ramp **[Flow. Limit Dec.]** d F L .

When the flow feedback is lower than the high flow **[Flow Lim Thd Active]** C H t reduced by a fixed hysteresis value, the pump speed is maintained or reduced if the reference frequency decrease.

When the flow feedback is lower than the low flow **[FlowLim Thd Disable]** r C H t , the flow limitation stops and the pump speed follows the system reference frequency.

NOTE: This function does not decrease the motor speed under **[Low Speed]** L S P value.

[Flow limitation Mode] F L N

Flow limitation mode.

Setting	Code / Value	Description
[No]	n o	No **Factory setting**
[YES]	Y E S	Yes

[Inst. Flow Assign.] F S IA ★

Installation flow sensor assignment.

This parameter can be accessed if **[Flow limitation Mode]** F L M is not set to **[No]** n o.

Setting	Code / Value	Description
[Not Configured]	n o	Not assigned **Factory setting**
[AI1]...**[AI3]**	A I 1...A I 3	Analog input AI1...AI3
[AI4]...**[AI5]**	A I 4...A I 5	Analog input AI4...AI5 if VW3A3203 I/O extension module has been inserted
[AI Virtual 1]...**[AI Virtual 3]**	A I V 1...A I V 3	Virtual analogic input 1...3
[Di5 PulseInput Assignment]...**[Di6 PulseInput Assignment]**	P I 5...P I 6	Digital input DI5...DI6 used as pulse input
[Est. Pump Flow]	S L P F	Sensor less estimated flow
[Est. System Flow]	S L S F	Estimated system flow This selection is only possible if **[Pump System Archit]** M P S A is set to **[Multi Drives]** n V S d or **[Multi Masters]** n V S d r **NOTE:** To use this selection, all the pump characteristics of the system must be configured.
NOTE: For sensor configuration, refer to section **[Sensors assignment]** *(see page 216)*.		

[Flow limitation] F L M - Menu

Access

[Complete settings] ➡ **[Pump functions]** ➡ **[Flow limitation]**

[Flow Lim Thd Active] C H t ★

Flow limitation function threshold activation.

Setting ❮❯	Description
Value in application customer unit	Setting range according to the configuration done in the **[Define system units]** S u C - menu. **Factory setting**: 0.0

[Flow.Lim.Thres.Inact.] r C H t ★

Flow limitation function threshold deactivation.

Setting ❮❯	Description
Value in application customer unit	Setting range according to the configuration done in the **[Define system units]** S u C - menu. **Factory setting**: 0.0

[Flow. Limit Dec.] d F L ★

Flow limitation function deceleration time (between F r S and 0).

Setting ❮❯	Description
0.01...99.99 s (1)	Setting range **Factory setting**: 5.0 s
(1) Range 0.01 to 99.99 s or 0.1 to 999.9 s or 1.0 to 6,000.0 according to **[Ramp increment]** I n r	

Section 8.21
[Pump monitoring] - [Pumpcycle monitoring]

[Pumpcycle monitoring] CSP - Menu

Access

[Complete settings] ➡ **[Pump monitoring]** ➡ **[Pumpcycle monitoring]**

About This Menu

The purpose of this function is to monitor the number of start sequences during a configured time window in order to prevent from an unwanted aging of the system and to detect any abnormal operation.

An internal counter counts the number of pump start sequences. Each time the pump is started, the counter is incremented. It is decreased by one every time window corresponding to one start.

If the counter reaches the maximum number allowed **[PumpCycle MaxStarts]** PCPn, a warning **[Pump Cycle warning]** PCPA is triggered.

If a start command occurs while the detected warning is active, an error **[PumpCycle Start Error]** PCPF is triggered. The application follows the **[PumpCycleError Resp]** PCPb defined behavior.

Restarting the pump is allowed as soon as the counter decreases under the maximum number of starts allowed, if the detected error has been cleared.

The function is based on the sliding time window in which the pump start commands are counted.

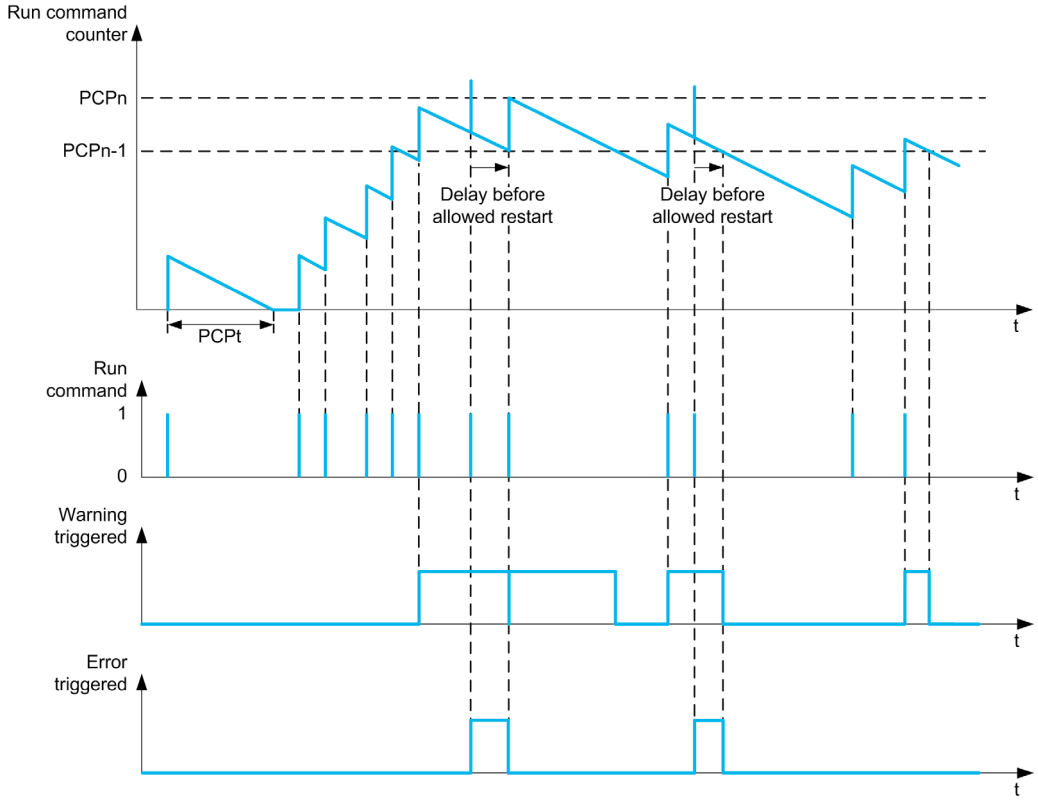

If **[PumpCycle Monitoring]** PCPM is set to **[Mode 1]** nor M, the function is activated without power Off time management.

If **[PumpCycle Monitoring]** PCPM is set to **[Mode 2]** rtC, the function is activated with power Off time management. This requires a time clock source such as the Graphic Display Terminal plugged at power On of the drive, or a Time server configured over Ethernet.

NOTE: Anti-Jam sequence is counted as one start whatever the effective number of start commands in the sequence.

[PumpCycle Monitoring] PCPM

Pumpcycle monitoring mode.

Setting	Code / Value	Description
[No]	nO	Cyclic monitoring disabled **Factory setting**
[Mode 1]	nOrM	Cyclic monitoring without power off time management
[Mode 2]	rtC	Cyclic monitoring with power off time management

[PumpCycle MaxStarts] PCPn ★

Maximum number of events to trip.

This parameter can be accessed if **[PumpCycle Monitoring]** PCPM is not set to **[No]** nO.

Setting ❮❯	Description
1...99	Setting range **Factory setting**: 6

[PumpCycle Timeframe] PCPt ★

Window time.

This parameter can be accessed if PCPM is not set to **[Inactive]** nO.

Setting ❮❯	Description
0...3,600 min	Setting range **Factory setting**: 60 min

[PumpCycleError Resp] PCPb ★

Pumpcycle monitoring response to a detected error.

This parameter can be accessed if PCPM is not set to **[Inactive]** nO.

Setting	Code / Value	Description
[Ignore]	nO	Detected error ignored
[Freewheel Stop]	YES	Freewheel stop
[Per STT]	Stt	Stop according to **[Type of stop]** Stt parameter but without an error triggered after stop
[Fallback Speed]	LFF	Change to fallback speed, maintained as long as the detected error persists and the command has not been removed (1)
[Ramp stop]	rMP	Ramp stop **Factory setting**
1 Because, in this case, the detected error does not trigger a stop, it is recommended to assign a relay or logic output to its indication.		

[Fallback Speed] LFF ★

Fallback speed.

This parameter can be accessed if PCPM is not set to **[Inactive]** nO.

Setting	Description
0.0...500.0 Hz	Setting range **Factory setting**: 0.0 Hz

Section 8.22
[Pump monitoring] - [Anti jam]

[Anti-jam monit] JAM - Menu

Access

[Complete settings] ➡ **[Pump monitoring]** ➡ **[Anti-jam monit]**

About This Menu

In waste water applications, clogging substances reduce the efficiency of the system and may decrease the pump service life.

It may also help to clear a blocked impeller, pipe, or valve at downstream location.

The anti-Jam function allows, manually and/or automatically, to execute forward and reverse pump rotation cycles.

The frequency reference, acceleration and deceleration, in forward and in reverse direction can be adjusted by dedicated parameters. It allows you to set up the function in accordance with the application specifications. Refer to the pump datasheet while setting up the function.

NOTE: The anti-Jam configuration overrides other configurations such as **[PID acceleration time]** ACCP or **[Start Accel Ramp]** ACC S.

NOTICE
DAMAGE TO THE PUMP This function uses forward and reverse operations. Verify that the pump and the installation are compatible with reverse operation before setting up this function. **Failure to follow these instructions can result in equipment damage.**

Anti-Jam Cycle

The anti-Jam function can be triggered:
- By an external trigger that can be assigned to a digital input (or word bit in IO profile).
- Automatically:
  - An automatic trigger can occur at each start command, or
  - Automatic triggers can occur within a predefined duration, or
  - Automatic triggers can occur depending on the motor torque threshold monitoring.

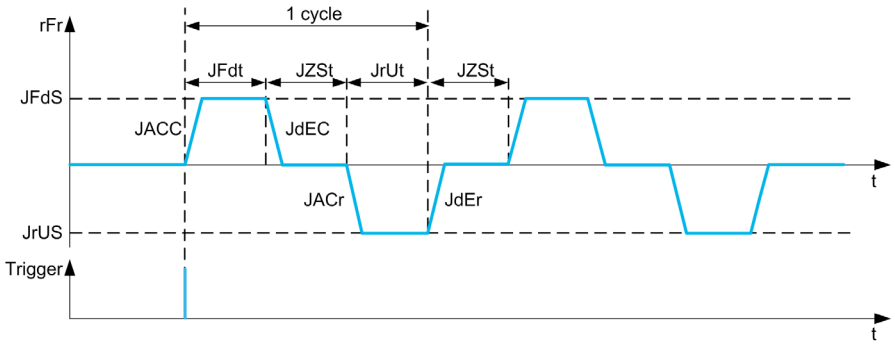

An Anti-Jam cycle is composed of:
- 1 forward action according to **[Anti-Jam Fwd Acc]** JACC, **[Anti-Jam Fwd Time]** JFdt, **[Anti-Jam Fwd Speed]** JFdS, **[Anti-Jam Fwd Dec]** JdEC,
- 1 stop action during **[Anti-Jam Stop Time]** JZSt,
- 1 reverse action according to **[Anti-Jam Rv Acc]** JACr,**[Anti-Jam Rv Time]** Jrdt, **[Anti-Jam Rv Speed]** JrVS, **[Anti-Jam Rv Dec]** JdEr,
- 1 stop action during **[Anti-Jam Stop Time]** JZSt,

An Anti-Jam sequence corresponds to a number of consecutive anti-Jam cycles: **[Anti-Jam Cycle Nb]** JnbC

NOTE: In case of an external trigger, if the command is removed before the end of the anti-Jam sequence, the anti-Jam sequence continues up to the end. In addition to the trigger, a run command is necessary during the whole anti-Jam sequence.

Anti-Jam Counting

The anti-Jam function monitors the number of sequences during a configured time window **[Anti-Jam Interval]** JAIt. It helps to detect untimely aging of the system and abnormal operation. For example, it occurs on an automatic trigger on a motor torque threshold.

An internal counter counts the number of sequences. Each time the sequence is started, the counter is incremented. It is decremented for each time window corresponding to one start.

If the counter reaches the maximum number allowed, **[Anti-Jam Max Seq]** JAIn, a warning **[Anti-Jam Warning]** JAIA and an error **[Anti Jam Error]** JAIF are triggered. The application follows the **[Anti-Jam Error Resp]** JAIb behavior defined.

[Anti-Jam Ext Trig] JEtC

Switch input selection.

Setting	Code / Value	Description
[Not Assigned]	nO	Not assigned **Factory setting**
[DI1]...**[DI6]**	LI1...LI6	Digital input DI1...DI6
[DI11]...**[DI16]**	LI11...LI16	Digital input DI11...DI16 if VW3A3203 I/O extension module has been inserted
[CD00]...**[CD10]**	Cd00...Cd10	Virtual digital input CMD.0...CMD.10 in **[I/O profile]** IO configuration
[CD11]...**[CD15]**	Cd11...Cd15	Virtual digital input CMD.11...CMD.15 regardless of configuration
[C101]...**[C110]**	C101...C110	Virtual digital input CMD1.01...CMD1.10 with integrated Modbus Serial in **[I/O profile]** IO configuration
[C111]...**[C115]**	C111...C115	Virtual digital input CMD1.11...CMD1.15 with integrated Modbus Serial regardless of configuration
[C201]...**[C210]**	C201...C210	Virtual digital input CMD2.01...CMD2.10 with CANopen® fieldbus module in **[I/O profile]** IO configuration
[C211]...**[C215]**	C211...C215	Virtual digital input CMD2.11...CMD2.15 with CANopen® fieldbus module regardless of configuration
[C301]...**[C310]**	C301...C310	Virtual digital input CMD3.01...CMD3.10 with a fieldbus module in **[I/O profile]** IO configuration
[C311]...**[C315]**	C311...C315	Virtual digital input CMD3.11...CMD3.15 with a fieldbus module regardless of configuration
[C501]...**[C510]**	C501...C510	Virtual digital input CMD5.01...CMD5.10 with integrated Ethernet Modbus TCP in **[I/O profile]** IO configuration
[C511]...**[C515]**	C511...C515	Virtual digital input CMD5.11...CMD5.15 with integrated Ethernet Modbus TCP regardless of configuration
[DI1 (Low level)]...**[DI6 (Low level)]**	LIL...LGL	Digital input DI1...DI6 used at low level

[Automatic Anti-Jam trigger] JAtC

Anti-Jam trigger mode.

Setting	Code / Value	Description
[No]	nO	Inactive
[Start]	StArt	An automatic trigger occurs at each start command
[Time]	tIME	Automatic triggers occur within a predefined duration
[Torque]	torqUE	Automatic triggers can occur depending on the motor torque threshold monitoring.

[Anti-Jam Trigger Time] JtCt ★

Inactive time before triggering an Anti-Jam when the pump has not been running.

This parameter can be accessed if **[Anti-Jam Auto Trig]** JAtC is set to **[Time]** tIME.

Setting	Description
0...9,999 h	Setting range **Factory setting**: 24 h

[Anti-jam Torque] JtCL ★

Level of torque to trigger.

This parameter can be accessed if **[Anti-Jam Auto Trig]** JAtC is set to **[Torque]** torqUE.

Setting	Description
10...150%	Setting range **Factory setting**: 110%

[Anti-Jam Start Delay] JtCd ★

Delay to trigger when an overtorque is detected.

This parameter can be accessed if **[Anti-Jam Auto Trig]** JAtC is set to **[Torque]** torqUE.

Setting	Description
0...3,600 s	Setting range **Factory setting**: 10 s

[Anti-Jam Fwd Acc] JACC ★

Anti-Jam acceleration in forward.

This parameter can be accessed if:

- **[Anti-Jam Ext Trig]** JEtC is not set to **[No]** no, or
- **[Anti-Jam Auto Trig]** JAtC is not set to **[No]** no.

Setting	Description
By default, with inr = 0.1: 0.00...300.00 s	Setting range **Factory setting**: 3 s
If inr = 0.01: 0.00...30.00 s	Setting range
If inr = 1: 0.00...3000.00 s	Setting range

[Anti-Jam Fwd Dec] JdEC ★

Anti-Jam deceleration in forward.

This parameter can be accessed if:

- **[Anti-Jam Ext Trig]** JEtC is not set to **[No]** no, or
- **[Anti-Jam Auto Trig]** JAtC is not set to **[No]** no.

Setting	Description
By default, with inr = 0.1: 0.00...300.00 s	Setting range **Factory setting**: 3 s
If inr = 0.01: 0.00...30.00 s	Setting range
If inr = 1: 0.00...3000.00 s	Setting range

[Anti-Jam Rv Acc] JArr ★

Anti-Jam acceleration in reverse.

This parameter can be accessed if:
- **[Anti-Jam Ext Trig]** JEtC is not set to **[No]** no, or
- **[Anti-Jam Auto Trig]** JAtC is not set to **[No]** no.

Setting ❮❯	Description
By default, with inr = 0.1: 0.00...300.00 s	Setting range **Factory setting**: 3 s
If inr = 0.01: 0.00...30.00 s	Setting range
If inr = 1: 0.00...3000.00 s	Setting range

[Anti-Jam Rv Dec] JdEr ★

Anti-Jam deceleration in reverse.

This parameter can be accessed if:
- **[Anti-Jam Ext Trig]** JEtC is not set to **[No]** no, or
- **[Anti-Jam Auto Trig]** JAtC is not set to **[No]** no.

Setting ❮❯	Description
By default, with inr = 0.1: 0.00...300.00 s	Setting range **Factory setting**: 3 s
If inr = 0.01: 0.00...30.00 s	Setting range
If inr = 1: 0.00...3000.00 s	Setting range

[Anti-Jam Fwd Speed] JFdS ★

Anti-Jam speed in forward.

This parameter can be accessed if:
- **[Anti-Jam Ext Trig]** JEtC is not set to **[No]** no, or
- **[Anti-Jam Auto Trig]** JAtC is not set to **[No]** no.

Setting ❮❯	Description
0.0...500.0 Hz	Setting range **Factory setting**: 0.0 Hz

[Anti-Jam Rv Speed] JruS ★

Anti-Jam speed in reverse.

This parameter can be accessed if:
- **[Anti-Jam Ext Trig]** JEtC is not set to **[No]** no, or
- **[Anti-Jam Auto Trig]** JAtC is not set to **[No]** no.

Setting ❮❯	Description
0.0...500.0 Hz	Setting range **Factory setting**: 0.0 Hz

[Anti-Jam Fwd Time] JFdt ★

Anti-Jam time in forward.

This parameter can be accessed if:
- **[Anti-Jam Ext Trig]** JEtC is not set to **[No]** no, or
- **[Anti-Jam Auto Trig]** JAtC is not set to **[No]** no.

Setting	Description
0...300 s	Setting range **Factory setting**: 1 s

[Anti-Jam Rv Time] Jrut ★

Anti-Jam time in reverse.

This parameter can be accessed if:
- **[Anti-Jam Ext Trig]** JEtC is not set to **[No]** no, or
- **[Anti-Jam Auto Trig]** JAtC is not set to **[No]** no.

Setting	Description
0...300 s	Setting range **Factory setting**: 1 s

[Anti-Jam Stop Time] JZSt ★

Anti-Jam time between forward and reverse.

This parameter can be accessed if:
- **[Anti-Jam Ext Trig]** JEtC is not set to **[No]** no, or
- **[Anti-Jam Auto Trig]** JAtC is not set to **[No]** no.

Setting	Description
0...300 s	Setting range **Factory setting**: 0 s

[Anti-Jam Cycle Nb] JnbC ★

Anti-Jam cycle number.

This parameter can be accessed if:
- **[Anti-Jam Ext Trig]** JEtC is not set to **[No]** no, or
- **[Anti-Jam Auto Trig]** JAtC is not set to **[No]** no.

Setting	Description
1...100	Setting range **Factory setting**: 10

[Anti-Jam Max Seq] JAMn ★

Maximum consecutive anti-Jam sequences allowed.

This parameter can be accessed if:
- **[Anti-Jam Ext Trig]** JEtC is not set to **[No]** no, or
- **[Anti-Jam Auto Trig]** JAtC is not set to **[No]** no.

Setting	Description
1...99	Setting range **Factory setting**: 2

[Anti-Jam Interval] JAIt ★

Anti-Jam minimum time between two non-consecutive sequences.

This parameter can be accessed if:

- **[Anti-Jam Ext Trig]** JEtC is not set to **[No]** no, or
- **[Anti-Jam Auto Trig]** JAtC is not set to **[No]** no.

Setting ( )	Description
0...3,600 s	Setting range **Factory setting**: 60 s

[Anti-Jam Error Resp] JAIb ★

Anti-Jam monitoring function response to a detected error.

This parameter can be accessed if:

- **[Anti-Jam Ext Trig]** JEtC is not set to **[No]** no, or
- **[Anti-Jam Auto Trig]** JAtC is not set to **[No]** no.

Setting	Code / Value	Description
[Ignore]	no	Detected error ignored
[Freewheel Stop]	YES	Freewheel stop **Factory setting**
[Per STT]	Stt	Stop according to **[Type of stop]** Stt parameter but without an error triggered after stop
[Fallback Speed]	LFF	Change to fallback speed, maintained as long as the detected error persists and the run command has not been removed (1)
[Ramp stop]	rMP	Stop on ramp

1 Because, in this case, the detected error does not trigger a stop, it is recommended to assign a relay or logic output to its indication.

Section 8.23
[Pump monitoring] - [Dry run Monit]

[Dry run Monit] dYr - Menu

Access

[Complete settings] ➡ [Pump monitoring] ➡ [Dry run Monit]

Dry-Run Condition

A dry-run condition occurs when the pump impeller is not totally submerged. Working in dry running during a long time can cause premature wear of the pump impeller.

Dry run occurs when there is excessive air in the suction pipe:
- Because the pump is not primed, or
- Due to excessive air leak in the suction line.

This significantly may reduce the bearings and seal service life due to high temperature raise and poor lubrication.

About This Menu

This function prevents the pump from operating in dry condition.

The dry-run function monitors the flow using:
- a flow switch, or
- a set of 2 points (speed; power) for a flow estimation.

When using a flow switch, the dry-run condition occurs when the switch is at a high level.

NOTE: It is recommended to use a flow switch that is open in case of a low flow and to use a digital input active at low level (DIxL). This allows you to stop the pump in case of a broken wire of the flow switch.

During the function setup, it is necessary to perform measurements at no-flow but with water in the system.

When using the flow estimation, the dry-run condition occurs if the estimated flow is lower than the no-flow power curve by **[Dry Run Factor]** drYX.

The no-flow power curve is defined by a set of 2 points:
- Minimum speed **[Low Speed]** nFLS ; Power at minimum speed **[Low Power]** nFLP
- Maximum speed **[High Speed]** nFHS; Power at maximum speed **[High Power]** nFHP

This no-flow power curve is also used by the pump low flow monitoring function.

NOTE: The no-flow power curve characterization shall be done after setting the motor control type.

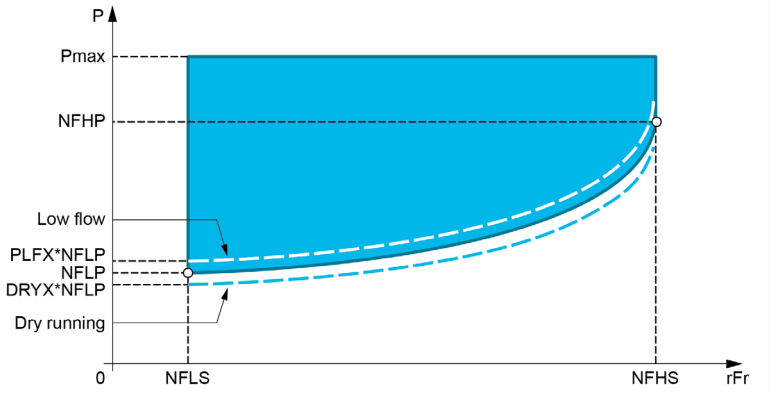

In case of dry-run conditions, this function will:
- Trigger a warning **[Drive Running Warning]** drYA if the dry-run condition is present.
- Trigger an error **[Dry Run Error]** drYF if the dry-run condition is present for a time longer than **[DryRun Error Delay]** drYd. After the error has been triggered, even if the detected error has been cleared, it is not possible to restart the pump before the end of the **[DryRun Restart Delay]** drYr.

NOTE: The detected error is not saved in case of a drive power OFF.

[DryRun Mode] dr YN

Dry-run mode.

Setting	Code / Value	Description
[No]	nO	Not activated **Factory setting**
[Switch]	SWt	Using sensor switch
[Power]	PWr	Using the sensorless estimation

[Switch Select] dr YW ★

Dry-run switches select.

This parameter can be accessed if **[DryRun Mode]** dr YN is set to **[Switch]** SWt.

Setting	Code / Value	Description
[No]	nO	Not assigned **Factory setting**
[DI1]...[DI6]	LI1...LI6	Digital input DI1...DI6
[DI11]...[DI16]	LI11...LI16	Digital input DI11...DI16, if VW3A3203 I/O extension module has been inserted
[DI1 (Low level)]...[DI6 (Low level)]	LIL...LGL	Digital input DI1...DI6 used at low level
[DI11 (Low level)]...[DI16 (Low level)]	LILL...LIGL	Digital input DI11...DI16 used at low level if VW3A3203 I/O extension module has been inserted

[Power Estim Value] oPrW ★

Motor mechanical power estimation

This parameter can be accessed if **[DryRun Mode]** dr YN is set to **[Power]** PWr.

Setting	Description
-327.67...327.67 kW	Setting range **Factory setting**: _

[Low Power] nFLP ★

No-flow low power.

This parameter can be accessed if **[DryRun Mode]** dr YN is set to **[Power]** PWr.

Setting	Description
0.00...327.67 kW	Setting range **Factory setting**: 0.00 kW

[Low Speed] nFLS ★

No-flow low speed.

This parameter can be accessed if **[DryRun Mode]** dr YN is set to **[Power]** PWr.

Setting	Description
0.0...500.0 Hz	Setting range **Factory setting**: 0.0 Hz

[High Power] nFHP ★

No-flow high power.

This parameter can be accessed if **[DryRun Mode]** drYM is set to **[Power]** PWr.

Setting	Description
0.00...327.67 kW	Setting range **Factory setting**: 0.00 kW

[High Speed] nFHS ★

No-flow high speed.

This parameter can be accessed if **[DryRun Mode]** drYM is set to **[Power]** PWr.

Setting	Description
0.0...500.0 Hz	Setting range **Factory setting**: 0.0 Hz

[Dry Run Factor] drYX ★

Dry-run factor.

This parameter can be accessed if **[DryRun Mode]** drYM is set to **[Power]** PWr.

Setting	Description
0...100%	Setting range **Factory setting**: 70%

[DryRun Error Delay] drYd ★

Dry run detected error delay.

This parameter can be accessed if **[DryRun Mode]** drYM is not set to **[No]** no.

Setting	Description
0...3,600 s	Setting range **Factory setting**: 5 s

[DryRun Restart Delay] drYr ★

Dry run detected error restart.

This parameter can be accessed if **[DryRun Mode]** drYM is not set to **[No]** no.

Setting	Description
10...3,600 s	Setting range **Factory setting**: 60 s

Section 8.24
[Pump monitoring] - [Pump low flow Monit]

What Is in This Section?

This section contains the following topics:

Topic	Page
[Pump low flow Monit] *P L F* - Menu	385
[Pump low flow Monit] *P L F* - Menu	387

[Pump low flow Monit] *P L F* - Menu

Access

[Complete settings] ➞ [Pump monitoring] ➞ [Pump low flow Monit]

About This Menu

The main consequence of running in low flow pump area is an increase of pump temperature as the pump is cooled by the liquid flow.

In addition, the low flow area is not a good working area from energy efficiency point of view.

No flow or low flow could be caused by:
- The verify valve at the discharge is closed.
- Issue on the pipe at the discharge (blocked pipes, …).

This function helps to prevent the pump from being damaged by working at no or low flow.

The monitoring can be carried out with different methods using or not sensors and whether the system is mono or multi-pump.

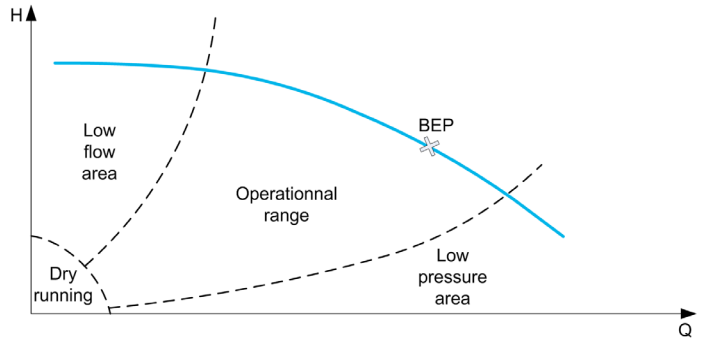

This function helps to detect probable no or low flow situation with different methods:
- Using a flow switch that indicates directly low flow condition: this method can be used only in mono-pump system or if the flow switch is connected on protected pump.
  NOTE: It is recommended to use a flow switch that is open in case of a low flow and to use a digital input active at low level (DIxL). This allows you to stop the pump in case of a broken wire of the flow switch.
- Using a flow sensor and comparing the actual flow value to a given threshold:
  - This method can be used only in mono-pump system or if the flow sensor is connected on protected pump.
  - All data related to the selected input shall be configured according to the sensor(Type, minimum, and maximum process value, scaling, …).
- Using a flow sensor and comparing the actual flow value to "Low flow system curve" QN characteristic:
  - This method can be used only in mono-pump system or if the flow sensor is connected on protected pump.
  - All data related to the selected input shall be configured according to the sensor(Type, minimum, and maximum process value, scaling, …).
- Using Power/Speed estimation and comparing pump working point to "No Flow" Power characteristic:
  - Entering two [Speed; Power] points is required, first point in No Flow area (at Low speed point LSP), second point in high-speed area (At high-speed point HSP).
  - This method is not recommended in case of flat PQ curve.

Low flow monitoring is activated only after **[PumpLF ActivDelay]** *P L F A* after the pump has been started in order to disable the monitoring function during start operation.

Once a low flow condition is detected, a warning **[Low Flow Warning]** *L F A* is raised. Warning is automatically cleared when drive is stopped.

If the condition continues for longer than the configured **[PumpLF Error Delay]** *P L F d* delay, a detected error is raised and the drive reacts according to the configured **[PumpLF Error Resp]** *P L F b* error response. The monitoring is active even during the deceleration phase. It is recommended to set a greater delay than the complete deceleration sequence.

After error has been detected, it is maintained during **[PumpLF Restart Delay]** *P L F r* even if the warning has been reset.

NOTE: the drive restarts without delay if it is powered-off and on (restart delay is not saved). During the setup of the function, it is necessary to perform measurements at no flow but with water in the system.

[PumpLF Monitoring] PLFM

Pump low flow monitoring mode.

Setting	Code / Value	Description
[Not Configured]	nO	Not configured **Factory setting**
[Switch]	SW	Using flow switch
[Flow]	q	Low flow is detected using fixed flow threshold
[Flow vs Speed]	qn	Low flow is detected using flow vs speed
[No Flow power]	nF	Low flow is detected using no flow power characteristic

[PumpLF DI Assign] PLFW ★

Pump low flow no flow switch selection.

This parameter can be accessed if **[PumpLF Monitoring]** PLFM is set to **[Switch]** SW.

Setting	Code / Value	Description
[Not Assigned]	nO	Not assigned **Factory setting**
[DI1]...[DI6]	LI1...LI6	Digital input DI1...DI6
[DI11]...[DI16]	LI11...LI16	Digital input DI11...DI16 if VW3A3203 I/O extension module has been inserted

[Pump Flow Assign.] FS2A ★

Pump flow sensor assignment.

This parameter can be accessed if **[PumpLF Monitoring]** PLFM is set to **[Flow]** q or to **[Flow vs Speed]** qn.

Setting	Code / Value	Description
[Not Configured]	nO	Not assigned **Factory setting**
[AI1]...[AI3]	AI1...AI3	Analog input AI1...AI3
[AI4]...[AI5]	AI4...AI5	Analog input AI4...AI5 if VW3A3203 I/O extension module has been inserted
[AI Virtual 1]...[AI Virtual 3]	AIV1...AIV3	Virtual analogic input 1...3
[Di5 PulseInput Assignment]...[Di6 PulseInput Assignment]	PI5...PI6	Digital input DI5...DI6 used as pulse input
[Est. Pump Flow]	SLPF	Sensor less estimated flow
NOTE: For sensor configuration, refer to section **[Sensors assignment]** *(see page 216)*.		

[Pump low flow Monit] PLF - Menu

Access

[Complete settings] ➡ **[Pump monitoring]** ➡ **[Pump low flow Monit]**

About This Menu

During the setup of the function, it is necessary to perform measurements at no or low flow but always with water in the system.

[PumpLF Min Level] PLFL ★

Pump low flow minimum flow level.

This parameter can be accessed if **[PumpLF Monitoring]** PLFM is set to **[Flow]** FLO or **[Flow vs Speed]** FLN.

Setting	Description
0...32,767	Setting range according to **[Flow rate unit]** SUFR. **Factory setting**: 0

[Power Estim Value] oPrW ★

Motor mechanical power estimation. It can be used to set **[Low Power]** nFLP and **[High Power]** nFHP values.

This parameter can be accessed if **[PumpLF Monitoring]** PLFM is set to **[No Flow Power]** nF.

Setting	Description
According to drive rating	Setting range **Factory setting**: _

[Low Speed] nFLS ★

No flow low speed.

This parameter can be accessed if **[PumpLF Monitoring]** PLFM is set to **[No Flow Power]** nF.

Setting	Description
0.0...500.0 Hz	Setting range **Factory setting**: 0.0 Hz

[High Speed] nFHS ★

No flow high speed.

This parameter can be accessed if **[PumpLF Monitoring]** PLFM is set to **[No Flow Power]** nF.

Setting	Description
0.0...500.0 Hz	Setting range **Factory setting**: 0.0 Hz

[Low Power] nFLP ★

No flow low power.

This parameter can be accessed if **[PumpLF Monitoring]** PLFM is set to **[No Flow Power]** nF.

Setting	Description
0...32,767	Setting range **Factory setting**: 0

[High Power] nFHP ★

No flow high power.

This parameter can be accessed if **[PumpLF Monitoring]** PLFM is set to **[No Flow Power]** nF.

Setting	Description
0...32,767	Setting range **Factory setting**: 0

[PumpLF Power Factor] PLFX ★

Pump low flow power factor.

This parameter can be accessed if **[PumpLF Monitoring]** PLFM is set to **[No Flow Power]** nF.

Setting	Description
100...500%	Setting range **Factory setting**: 110%

[PumpLF ActivDelay] PLFA ★

Pump low flow monitoring activation delay after the pump has been started.

This parameter can be accessed if **[PumpLF Monitoring]** PLFM is not set to **[No]** no.

Setting	Description
0...3,600 s	Setting range **Factory setting**: 10 s

[PumpLF Error Delay] PLFd ★

Pump low flow detected error delay.

This parameter can be accessed if **[PumpLF Monitoring]** PLFM is not set to **[No]** no.

Setting	Description
0...3,600 s	Setting range **Factory setting**: 10 s

[PumpLF Error Resp] PLFb ★

Pump low flow monitoring function response to a detected error.

This parameter can be accessed if **[PumpLF Monitoring]** PLFM is not set to **[No]** no.

Setting	Code / Value	Description
[Ignore]	no	Detected error ignored
[Freewheel Stop]	YES	Freewheel stop **Factory setting**
[Per STT]	STT	Stop according to **[Type of stop]** STT parameter but without an error triggered after stop
[Fallback Speed]	LFF	Change to fallback speed, maintained as long as the detected error persists and the run command has not been removed (1)
[Ramp stop]	rMP	Stop on ramp

1 Because, in this case, the detected error does not trigger a stop, it is recommended to assign a relay or logic output to its indication.

[Fallback Speed] *L F F* ★

Fall back speed.

Setting	Description
0.0...500.0 Hz	Setting range **Factory setting**: 0.0 Hz

[PumpLF Restart Delay] *P L F r* ★

Pump low flow restart delay.

This parameter can be accessed if **[PumpLF Monitoring]** *P L F Π* is not set to **[No]** *n o*.

Setting	Description
0...3,600 s	Setting range **Factory setting**: 0 s

Section 8.25
[Pump monitoring] - [Thermal monitoring]

[Thermal monitoring] tPP - Menu

Access

[Complete settings] ➞ [Pump monitoring] ➞ [Thermal monitoring]

About This Menu

Identical to **[Thermal monitoring]** tPP - Menu *(see page 188)*.

Section 8.26
[Pump monitoring] - [Inlet pressure monitoring]

What Is in This Section?

This section contains the following topics:

Topic	Page
[Inlet pressure monitoring] ,*PP* - Menu	392
[Inlet pressure monitoring] ,*PP* - Menu	394

[Inlet pressure monitoring] iPP - Menu

Access

[Complete settings] ➡ [Pump monitoring] ➡ [Inlet pressure monitoring]

About This Menu

This function helps to detect an inlet low-pressure situation.

This monitoring function is at station level and not a pump level only.

This function requires a pressure sensor to monitor the inlet pressure of the system.

In case of low inlet pressure situation, this function:

- Triggers a warning and reduces the outlet pressure set point within a predefined range in order to maintain the inlet pressure at an acceptable level. The inlet pressure compensation applies only to pressure controlled application.
- Triggers a detected error signal if, despite of this pressure set point reduction, the inlet pressure feedback is less than the minimum acceptable value configured.

The inlet pressure monitoring function can be used for mono-pump or multi-pump stations.

This is an example of a station architecture:

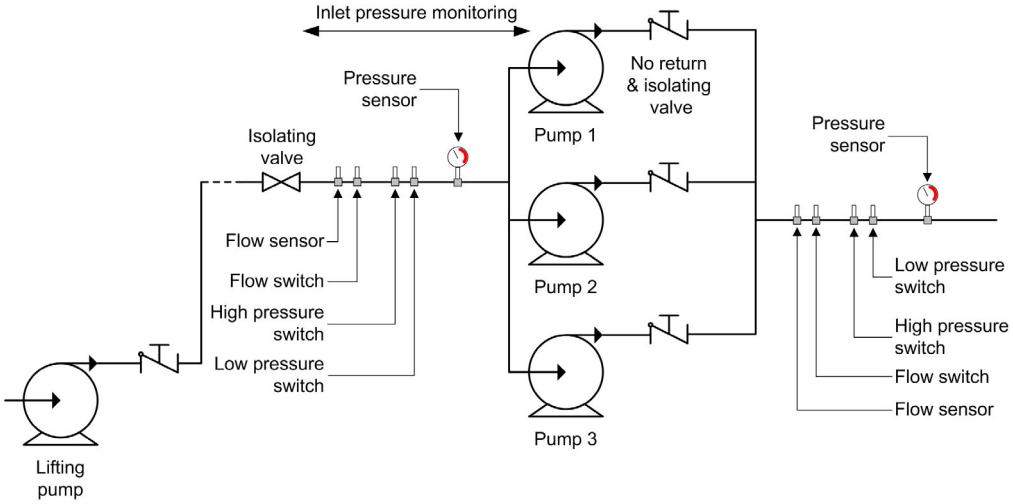

Monitoring Diagram

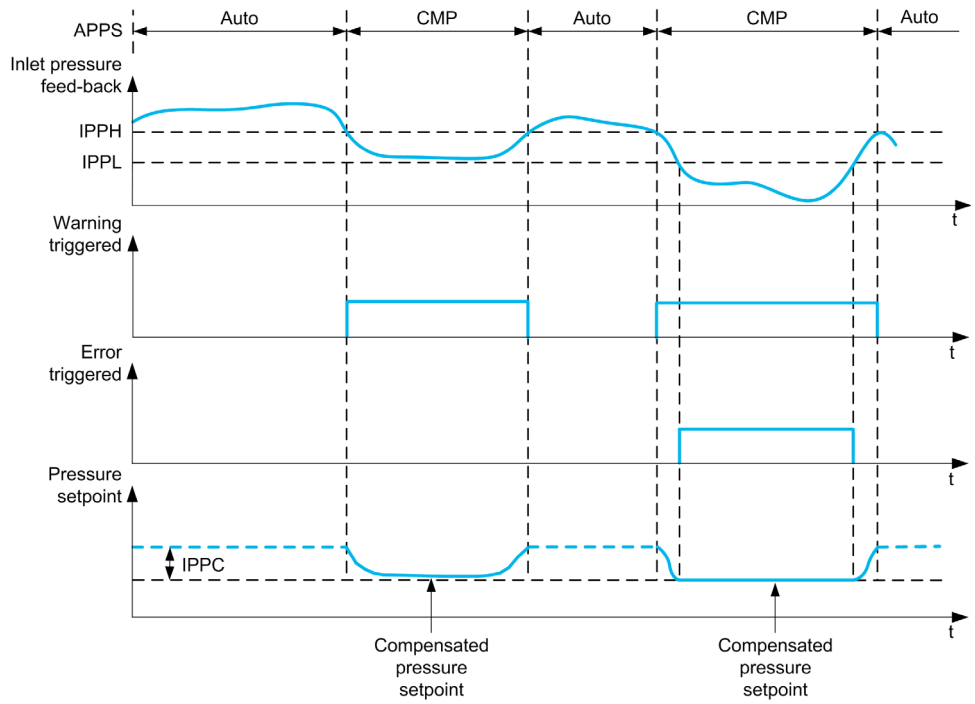

When the inlet pressure feedback is lower than **[InletPres High Thd]** ,PPH or **[InletPres DI assign]** ,PPW is active, a warning **[InletPres Warning]** ,PPA is triggered. In case of a pressure controlled application, the pressure set point is reduced according to **[InletPres Max Comp]** ,PPC.

When the inlet pressure feedback is less than **[InletPres Low Thd]** ,PPL or **[InletPres DI assign]** ,PPW is active for a delay longer than **[InletPresError Delay]** ,PPd, a detected error **[Inlet Pressure Error]** ,PPF is triggered. The application follows the **[InletPresErrorResp]** ,PFb defined behavior.

[InletPres Monitoring] ,PPM

Inlet pressure monitoring mode.

Setting	Code / Value	Description
[No]	no	Not activated **Factory setting**
[Warning]	ALArM	Warning monitoring activated
[Compensation]	CoMP	Warning and compensation activated

[InletPres DI Assign] ,PPW★

Low inlet pressure switch source.

This parameter can be accessed if **[InletPres Monitoring]** ,PPM is not set to **[No]** no.

Setting	Code / Value	Description
[Not Assigned]	no	Not assigned **Factory setting**
[DI1]...**[DI6]**	L ,I...L ,6	Digital input DI1...DI6
[DI11]...**[DI16]**	L ,11...L ,16	Digital input DI11...DI16 if VW3A3203 I/O extension module has been inserted
[DI1 (Low level)]...**[DI6 (Low level)]**	L IL...L 6L	Digital input DI1...DI6 used at low level if VW3A3203 I/O extension module has been inserted.
[DI11 (Low level)]...**[DI16 (Low level)]**	L 1IL...L 16L	Digital input DI11...DI16 used at low level if VW3A3203 I/O extension module has been inserted.

[InletPres Assign] P S I A ★

Inlet pressure sensor assignment.

This parameter can be accessed if **[InletPres Monitoring]** I P P M is not set to **[No]** n o.

Setting	Code / Value	Description
[Not Configured]	n o	Not assigned **Factory setting**
[AI1]...**[AI3]**	A I 1...A I 3	Analog input AI1...AI3
[AI4]...**[AI5]**	A I 4...A I 5	Analog input AI4...AI5 if VW3A3203 I/O extension module has been inserted
[AI Virtual 1]...**[AI Virtual 3]**	A I V 1...A I V 3	Virtual analogic input 1...3
NOTE: For sensor configuration, refer to section **[Sensors assignment]** *(see page 216)*.		

[Inlet pressure monitoring] I P P - Menu

Access

[Complete settings] ➡ **[Pump monitoring]** ➡ **[Inlet pressure monitoring]**

[InletPres High Thd] I P P H ★

Inlet pressure monitoring high/acceptable pressure.

This parameter can be accessed if **[InletPres Monitoring]** I P P M is not set to **[No]** n o.

Setting ⟲	Description
-32,767...32,767	Setting range according to **[P sensor unit]** S u P r **Factory setting**: 0

[InletPres Low Thd] I P P L ★

Inlet pressure monitoring low/minimum pressure.

This parameter can be accessed if **[InletPres Monitoring]** I P P M is not set to **[No]** n o.

Setting ⟲	Description
-32,767...32,767	Setting range according to **[P sensor unit]** S u P r **Factory setting**: 0

[InletPres Max Comp] I P P C ★

Inlet pressure monitoring max compensation.

This parameter can be accessed if **[InletPres Monitoring]** I P P M is set to **[Compensation]** C o M P.

Setting ⟲	Description
0...32,768	Setting range according to **[P sensor unit]** S u P r **Factory setting**: 0

[InletPresError Delay] I P P d ★

Inlet pressure monitoring time

This parameter can be accessed if:

- **[InletPres DI Assign]** I P P W is not set to **[Not Configured]** n o, or
- **[InletPres Assign]** P S I A is not set to **[Not Configured]** n o.

Setting ⟲	Description
0...3,600 s	**Factory setting**: 0 s

[InletPresError Resp] iPPb ★

Pressure monitoring function response to a detected error.

This parameter can be accessed if **[InletPres Monitoring]** iPPM is not set to **[No]** nO.

Setting	Code / Value	Description
[Ignore]	nO	Detected error ignored
[Freewheel Stop]	YES	Freewheel stop
[Per STT]	StT	Stop according to **[Type of stop]** StT parameter but without an error triggered after stop
[Fallback Speed]	LFF	Change to fallback speed, maintained as long as the detected error persists and the command has not been removed (1)
[Ramp stop]	rMP	Stop on ramp **Factory setting**

[Fallback Speed] LFF ★

Fall back speed.

This parameter can be accessed if **[OutPresError Resp]** oPPb is set to **[Fallback Speed]** LFF.

Setting	Description
0.0...500.0 Hz	Setting range **Factory setting**: 0.0 Hz

Section 8.27
[Pump monitoring] - [Outlet pressure monitoring]

What Is in This Section?

This section contains the following topics:

Topic	Page
[Outlet pressure monitoring] *oPP* - Menu	397
[Outlet pressure monitoring] *oPP* - Menu	399

[Outlet pressure monitoring] oPP - Menu

Access

[Complete settings] → [Pump monitoring] → [Outlet pressure monitoring]

About This Menu

This function detects an outlet high and low-pressure situation.

- It helps to prevent from high outlet pressure situations that can damage the hydraulic network (for example, pipe burst)
- It monitors low outlet pressure situations that can reflect damage on the hydraulic network (for example, pipe break)

This monitoring function is at the outlet station level.

The outlet pressure monitoring function requires a pressure sensor and/or a pressure switch to monitor the outlet pressure of the system.

- A high-pressure switch allows the activation of the high outlet pressure monitoring, according to the pressure switch specification.
- A pressure sensor allows the activation of both high and low outlet pressure monitoring, according to the **[OutPres Min Level]** oPPL and **[OutPres Max Level]** oPPH values.

Example of the station architecture:

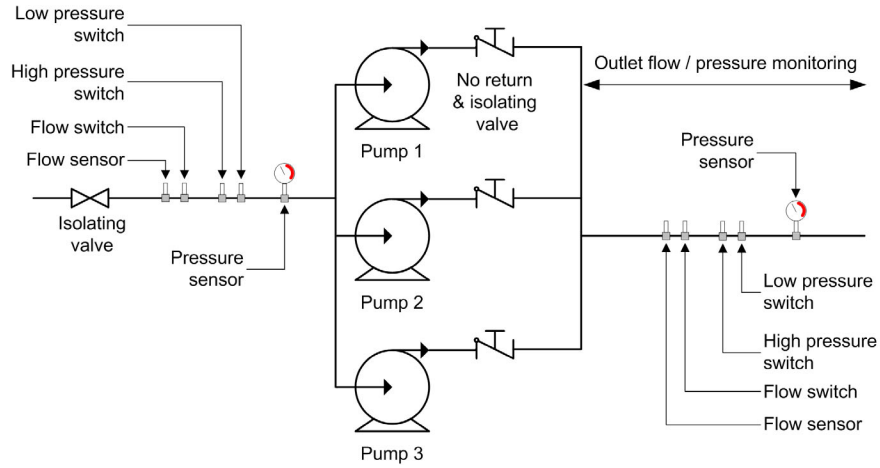

The outlet pressure monitoring function monitors the outlet pressure of the system.

- When a low-Pressure condition is present, a **[Low OutPres Warning]** oPLA warning is triggered.
- When a high-Pressure condition is present, coming from the sensor, a **[High OutPres Warning]** oPHA warning is triggered.
- When a high-Pressure condition is present, coming from the switch, a **[Switch OutPres Warning]** oPSA warning is triggered.
- If the high-pressure condition remains for longer than **[OutPresError Delay]** oPPd time, a detected **[Out Pressure High]** oPHF error is triggered. The application follows the **[OutPresErrorResp]** oPPb defined behavior.
- If the low-pressure condition remains for longer than **[OutPresError Delay]** oPPd time, a detected **[Out Pressure Low]** oPLF error is triggered. The application follows the **[OutPresError Delay]** oPPd defined behavior.

NOTE:

- It is recommended to use a pressure switch that is open in case of high pressure and to use a digital input active at low level (DIxL). This allows stopping the pump in case of broken wire of the pressure switch.
- It is recommended to use a 4-20 mA pressure sensor and to enable the 4-20 mA loss function. This allows stopping the pump in case of broken wire of the pressure sensor.

[OutPres Monitoring] oPPM

Mode selection.

Setting	Code / Value	Description
[No]	nO	Inactive **Factory setting**
[Switch]	SW	Activated on switch
[Sensor]	SnSr	Activated on sensor
[Both]	bOtH	Activated on sensor and switch

[OutPres DI Assign] oPPW ★

High outlet pressure switch source.

This parameter can be accessed if:

- **[OutPres Monitoring]** oPPM is set to **[Switch]** SW, or
- **[OutPres Monitoring]** oPPM is set to **[Both]** bOtH.

Setting	Code / Value	Description
[Not Assigned]	nO	Not assigned **Factory setting**
[DI1]...[DI6]	LI1...LI6	Digital input DI1...DI6
[DI11]...[DI16]	LI11...LI16	Digital input DI11...DI16 if VW3A3203 I/O extension module has been inserted
[DI1 (Low level)]...[DI6 (Low level)]	LIL...LGL	Digital input DI1...DI6 used at low level if VW3A3203 I/O extension module has been inserted.
[DI11 (Low level)]...[DI16 (Low level)]	LIIL...LIGL	Digital input DI11...DI16 used at low level if VW3A3203 I/O extension module has been inserted.

[OutletPres Assign] PS2A ★

Outlet pressure sensor assignment.

This parameter can be accessed if:

- **[OutPres Monitoring]** oPPM is set to **[Sensor]** SnSr, or
- **[OutPres Monitoring]** oPPM is set to **[Both]** bOtH.

Setting	Code / Value	Description
[Not Configured]	nO	Not assigned **Factory setting**
[AI1]...[AI3]	AI1...AI3	Analog input AI1...AI3
[AI4]...[AI5]	AI4...AI5	Analog input AI4...AI5 if VW3A3203 I/O extension module has been inserted
[AI Virtual 1]...[AI Virtual 3]	AIV1...AIV3	Virtual analogic input 1...3
NOTE: For sensor configuration, refer to section **[Sensors assignment]** *(see page 216)*.		

[Outlet pressure monitoring] oPP - Menu

Access

[Complete settings] ➡ [Pump monitoring] ➡ [Outlet pressure monitoring]

[OutPres Min Level] oPPL ★

Outlet pressure minimum level.

This parameter can be accessed if:
- **[OutPres Monitoring]** oPPM is set to **[Sensor]** Sn Sr, or
- **[OutPres Monitoring]** oPPM is set to **[Both]** both.

Setting	Description
0...32,767	Setting range, according to **[P sensor unit]** SuPr. **Factory setting**: 0

[OutPres Max Level] oPPH ★

Outlet pressure maximum level.

This parameter can be accessed if:
- **[OutPres Monitoring]** oPPM is set to **[Sensor]** Sn Sr, or
- **[OutPres Monitoring]** oPPM is set to **[Both]** both.

Setting	Description
0...32,767	Setting range, according to **[P sensor unit]** SuPr. **Factory setting**: 0

[OutPresError Delay] oPPd ★

Outlet pressure monitoring time.

This parameter can be accessed if **[OutPres Monitoring]** oPPM is not set to **[No]** no.

Setting	Description
0...3,600 s	Setting range **Factory setting**: 0 s

[OutPresError Resp] oPPb ★

Outlet pressure fault config.

This parameter can be accessed if **[OutPres Monitoring]** oPPM is not set to **[No]** no.

Setting	Code / Value	Description
[Ignore]	no	Detected error ignored
[Freewheel Stop]	YES	Freewheel stop
[Per STT]	Stt	Stop according to **[Type of stop]** Stt parameter but without an error triggered after stop
[Fallback Speed]	LFF	Change to fallback speed, maintained as long as the detected error persists and the command has not been removed (1)
[Ramp stop]	rMP	Stop on ramp **Factory setting**

[Fallback Speed] LFF ★

Fall back speed.

This parameter can be accessed if **[OutPresError Resp]** oPPb is set to **[Fallback Speed]** LFF.

Setting	Description
0.0...500.0 Hz	Setting range **Factory setting**: 0.0 Hz

Section 8.28
[Pump monitoring] - [High flow monitoring]

What Is in This Section?

This section contains the following topics:

Topic	Page
[High flow monitoring] *H F P* **-** Menu	401
[High flow monitoring] *H F P* **-** Menu	403

[High flow monitoring] HFP - Menu

Access

[Complete settings] → [Pump monitoring] → [High flow monitoring]

About This Menu

The high flow monitoring helps to detect abnormal outlet high flow situation:
- Works outside application flow capabilities
- Helps to detect pipe burst

This monitoring function is at outlet station level.This function requires a flow sensor to monitor the outlet flow of the system.

This is an example of a station architecture:

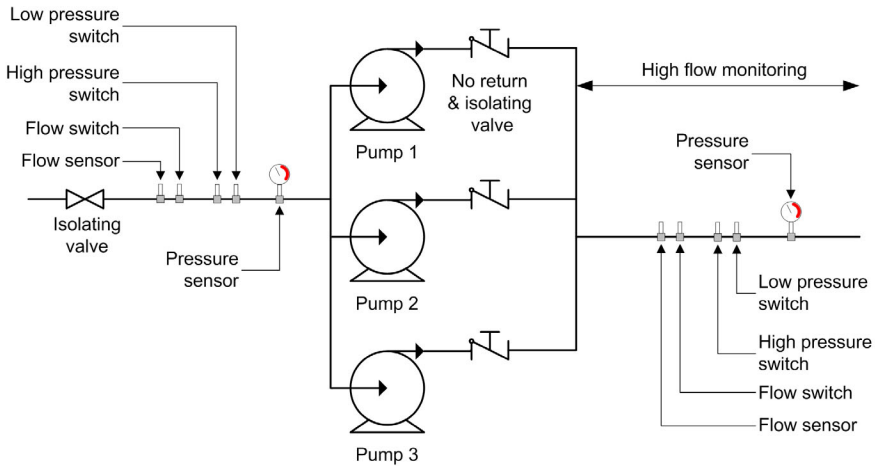

High flow monitoring function monitors the outlet flow of the system:
- When the outlet flow feedback is higher than **[HighFlow MaxLevel]** HFPL , a warning **[High Flow Warning]** HFPA is triggered. The application does not stop.
- If the outlet flow feedback remains higher than **[HighFlow MaxLevel]** HFPL for longer than **[HighFlowError Delay]** HFPd time, a detected error **[High Flow Error]** HFPF is triggered. The application follows the **[HighFlowErrorResp]** HFPb defined behavior.

If a high flow situation is detected in a multi-pump system, all the pumps stop.

[HighFlow Activation] HFPn

Mode selection.

Setting	Code / Value	Description
[No]	no	Function disabled **Factory setting**
[YES]	YES	Function enabled

[Inst. Flow Assign.] FSIA★

Installation flow sensor assignment.

This parameter can be accessed if **[HighFlow Activation]** HFPn is not set to **[No]** no.

Setting	Code / Value	Description
[Not Configured]	no	Not assigned **Factory setting**
[AI1]...[AI3]	AI1...AI3	Analog input AI1...AI3
[AI4]...[AI5]	AI4...AI5	Analog input AI4...AI5 if VW3A3203 I/O extension module has been inserted
NOTE: For sensor configuration, refer to section **[Sensors assignment]** *(see page 216)*.		

Setting	Code / Value	Description
[AI Virtual 1]...**[AI Virtual 3]**	AIV1...AIV3	Virtual analogic input 1...3
[Di5 PulseInput Assignment]...**[Di6 PulseInput Assignment]**	P15...P16	Digital input DI5...DI6 used as pulse input
[Est. Pump Flow]	SLPF	Sensor less estimated flow
[Est. System Flow]	SLSF	Estimated system flow This selection is only possible if **[Pump System Archit]** PPSA is set to **[Multi Drives]** nVSd or **[Multi Masters]** nVSdr **NOTE:** To use this selection, all the pump characteristics of the system must be configured.
NOTE: For sensor configuration, refer to section **[Sensors assignment]** *(see page 216)*.		

[High flow monitoring] HFP - Menu

Access

[Complete settings] ➡ **[Pump monitoring]** ➡ **[High flow monitoring]**

About This Menu

Following parameters can be accessed if **[HighFlow Activation]** HFPM is not set to **[No]** no.

[HighFlow MaxLevel] HFPL ★

High flow max level.

Setting	Description
0...32,767	Setting range, according to **[Flow rate unit]** SUFr **Factory setting**: 32767

[HighFlowError Delay] HFPd ★

High flow delay.

Setting	Description
0...3,600 s	Setting range **Factory setting**: 10 s

[HighFlowError Resp] HFPb ★

High flow monitoring function response to a detected error.

Setting	Code / Value	Description
[Ignore]	no	Detected error ignored
[Freewheel Stop]	YES	Freewheel stop
[Per STT]	STT	Stop according to **[Type of stop]** STT parameter but without an error triggered after stop
[Fallback Speed]	LFF	Change to fallback speed, maintained as long as the detected error persists and the command has not been removed (1)
[Ramp stop]	rMP	Stop on ramp **Factory setting**

[Fallback Speed] LFF ★

Fall back speed.

Setting	Description
0.0...500.0 Hz	Setting range **Factory setting**: 0.0 Hz

Section 8.29
[Fan] - [PID controller]

[PID Controller] P id - Menu

Access

[Complete settings] ➡ **[Fan]** ➡ **[PID Controller]**

About This Menu

Identical to **[PID Controller]** P id - Menu *(see page 303)*.

Section 8.30
[Fan] - [Feedback monitoring]

[Feedback monitoring] *F K П* - Menu

Access

[Complete settings] ➡ [Fan] ➡ [Feedback monitoring]

About This Menu

Identical to **[Feedback monitoring]** *F K П* - Menu *(see page 336)*.

Section 8.31
[Fan] - [Jump frequency]

[Jump frequency] JUF - Menu

Access

[Complete settings] ➞ [Fan] ➞ [Jump frequency]

About This Menu

This function helps to prevent prolonged operation within an adjustable range around the regulated frequency.

This function can be used to help to prevent a speed, which could cause resonance, being reached. Setting the function to 0 renders it inactive.

[Skip Frequency] JPF

Jump frequency.

Setting	Description
0.0...500.0 Hz	Setting range **Factory setting**: 0.0 Hz

[Skip Frequency 2] JF2

Jump frequency 2.

Setting	Description
0.0...500.0 Hz	Setting range **Factory setting**: 0.0 Hz

[3rd Skip Frequency] JF3

Jump frequency 3.

Setting	Description
0.0...500.0 Hz	Setting range **Factory setting**: 0.0 Hz

[Skip.Freq.Hysteresis] JFH ★

Jump frequency bandwidth.

This parameter can be accessed if at least one skip frequency JPF, JF2, or JF3 is different from 0.

Skip frequency range: between JPF – JFH and JPF + JFH for example.

This adjustment is common to the 3 frequencies JPF, JF2, JF3.

Setting	Description
0.1...10.0 Hz	Setting range **Factory setting**: 1.0 Hz

Section 8.32
[Fan]

[Fan] C S F A - Menu

Access

[Complete settings] ➞ **[Fan]**

[ErrorDetect Disabled] i n H ★

Disable error detection.

In rare cases, the monitoring functions of the drive may be unwanted because they impede the purpose of the application. A typical example is a smoke extractor fan operating as a part of a fire protection system. If a fire occurs, the smoke extractor fan should operate as long as possible, even if, for example, the permissible ambient temperature of the drive is exceeded. In such applications, damage to or destruction of the device may be acceptable as collateral damage, for example, to keep other damage from occurring whose hazard potential is assessed to be more severe.

A parameter is provided to disable certain monitoring functions in such applications so that automatic error detection and automatic error responses of the device are no longer active. You must implement alternative monitoring functions for disabled monitoring functions that allow operators and/or master control systems to adequately respond to conditions which correspond to detected errors. For example, if overtemperature monitoring of the drive is disabled, the drive of a smoke extractor fan may itself cause a fire if errors go undetected. An overtemperature condition can be, for example, signaled in a control room without the drive being stopped immediately and automatically by its internal monitoring functions.

⚠ DANGER

MONITORING FUNCTIONS DISABLED, NO ERROR DETECTION

- Only use this parameter after a thorough risk assessment in compliance with all regulations and standards that apply to the device and to the application.
- Implement alternative monitoring functions for disabled monitoring functions that do not trigger automatic error responses of the drive, but allow for adequate, equivalent responses by other means in compliance with all applicable regulations and standards as well as the risk assessment.
- Commission and test the system with the monitoring functions enabled.
- During commissioning, verify that the drive and the system operate as intended by performing tests and simulations in a controlled environment under controlled conditions.

Failure to follow these instructions will result in death or serious injury.

This parameter can be accessed if **[Access Level]** L A C is set to **[Expert]** E P r.

If the assigned input or bit state is:
- 0: error detection is enabled.
- 1: error detection is disabled.

Current errors are cleared on a rising edge from 0 to 1 of the assigned input or bit.

Detection of following errors can be disabled: AnF, bOF, CnF, COF, dLF, EnF, EPF1, EPF2, FCF2, ETHF, InFA, InFB, InFV, LFF1, LFF3, ObF, OHF, OLC, OLF, OPF1, OPF2, OSF, PHF, SLF1, SLF2, SLF3, SOF, SPF, SSF, TFd, TJF, TnF, ULF, USF.

Setting	Code / Value	Description
[Not Assigned]	n o	Not assigned **Factory setting**
[DI1]...**[DI6]**	L I 1...L I 6	Digital input DI1...DI6
[DI11]...**[DI16]**	L I 11...L I 16	Digital input DI11...DI16 if VW3A3203 I/O extension module has been inserted
[CD00]...**[CD10]**	C d 00...C d 10	Virtual digital input CMD.0...CMD.10 in **[I/O profile]** I o configuration
[CD11]...**[CD15]**	C d 11...C d 15	Virtual digital input CMD.11...CMD.15 regardless of configuration

Setting	Code / Value	Description
[C101]...[C110]	C101...C110	Virtual digital input CMD1.01...CMD1.10 with integrated Modbus Serial in [I/O profile] IO configuration
[C111]...[C115]	C111...C115	Virtual digital input CMD1.11...CMD1.15 with integrated Modbus Serial regardless of configuration
[C201]...[C210]	C201...C210	Virtual digital input CMD2.01...CMD2.10 with CANopen® fieldbus module in [I/O profile] IO configuration
[C211]...[C215]	C211...C215	Virtual digital input CMD2.11...CMD2.15 with CANopen® fieldbus module regardless of configuration
[C301]...[C310]	C301...C310	Virtual digital input CMD3.01...CMD3.10 with a fieldbus module in [I/O profile] IO configuration
[C311]...[C315]	C311...C315	Virtual digital input CMD3.11...CMD3.15 with a fieldbus module regardless of configuration
[C501]...[C510]	C501...C510	Virtual digital input CMD5.01...CMD5.10 with integrated Ethernet in [I/O profile] IO configuration
[C511]...[C515]	C511...C515	Virtual digital input CMD5.11...CMD5.15 with integrated Ethernet regardless of configuration

[Auto Fault Reset] AtrA

This function can be used to automatically perform individual or multiple Fault Resets. If the cause of the error that has triggered the transition to the operating state Fault disappears while this function is active, the drive resumes normal operation. While the Fault Reset attempts are performed automatically, the output signal **[Operating state Fault]** is not available. If the attempts to perform the Fault Reset are not successful, the drive remains in the operating state Fault and the output signal **[Operating state Fault]** becomes active.

⚠ WARNING

UNANTICIPATED EQUIPMENT OPERATION

- Verify that activating this function does not result in unsafe conditions.
- Verify that the fact that the output signal "Operating state Fault" is not available while this function is active does not result in unsafe conditions.

Failure to follow these instructions can result in death, serious injury, or equipment damage.

The drive error relay remains activated if this function is active. The speed reference and the operating direction must be maintained.

It is recommended to use 2-wire control (**[2/3-wire control]** tCC is set to **[2-Wire Control]** 2C and **[2-wire type]** tCt is set to **[Level]** LEL).

If the restart has not taken place once the configurable time **[Fault Reset Time]** tAr has elapsed, the procedure is aborted and the drive remains locked until it is turned off and then on again.

The detected error codes, which permit this function, are listed.

Setting	Code / Value	Description
[No]	nO	Function inactive **Factory setting**
[Yes]	YES	Automatic restart, after locking in error state, if the detected error has disappeared and the other operating conditions permit the restart. The restart is performed by a series of automatic attempts separated by increasingly longer waiting periods: 1 s, 5 s, 10 s, then 1 minute for the following attempts.

[Catch On Fly] FLr

Catch on the fly function assignment.

Used to enable a smooth restart if the run command is maintained after the following events:
- Loss of line supply or disconnection.
- Clearance of current detected error or automatic restart.
- Freewheel stop (a delay of 5 time the **[Rotor Time Const]** trA is applied before taking the next run command into account).

The speed given by the drive resumes from the estimated speed of the motor at the time of the restart, then follows the ramp to the reference speed.

This function requires 2-wire level control.

When the function is operational, it activates at each run command, resulting in a slight delay of the current (0.5 s max).

[Catch On Fly] FLr is forced to **[No]** nO if **[Auto DC Injection]** AdC is set to **[Continuous]** Ct.

Setting	Code / Value	Description
[Not Configured]	nO	Function inactive. **Factory setting**
[Yes On Freewheel]	YES	Function active only after freewheel stop.
[Yes Always]	ALL	Function active after all stop type

Section 8.33
[Generic functions] - [Speed limits]

[Speed limits] SLM - Menu

Access

[Complete settings] ➡ **[Generic functions]** ➡ **[Speed limits]**

About This Menu

This function defines how the acceleration and deceleration are controlled during start and stop of the pump.

The pump working area is within the speed range **[Low Speed]** LSP - **[High Speed]** HSP.

The minimum speed is provided by the pump manufacturer according to the application.

Running below the minimum speed and/or starting the pump with a long acceleration ramp time has an impact on the lubrication of the seal, on the cooling of the impeller and the bearings.

A specific check-valve deceleration ramp is available to reduce any large variation of pressure that can generate an instability of the valve.

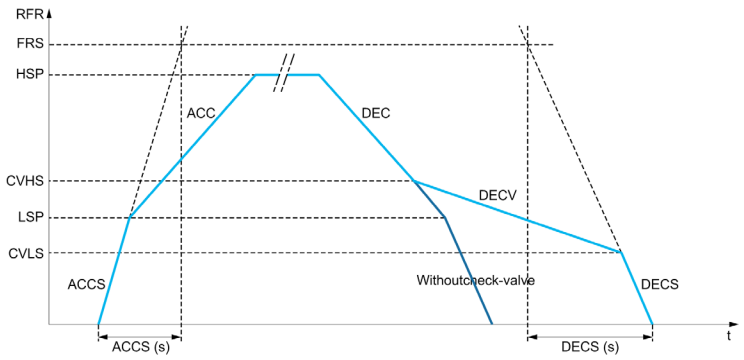

When the pump starts, the pump accelerates up to **[Low Speed]** LSP according to **[Start Accel Ramp]** RCCS.When the pump speed is above **[Low Speed]** LSP, the pump acceleration and deceleration are managed according to **[Acceleration]** RCC and **[Deceleration]** dEC if no other function is activated.

When the pump stops:

- The pump decelerates down to **[Check Valve Spd 2]** CVHS according to **[Deceleration]** dEC
- The pump decelerates from **[Check Valve Spd 2]** CVHS to **[Check Valve Spd 1]** CVLS according to **[Dec. Check Valve]** dECV
- The pump decelerates from **[Check Valve Spd 1]** CVLS to zero speed according to **[Deceleration on Stop]** dECS

If **[Start Accel Ramp]** RCCS = 0, the start ramp is ignored and **[Acceleration]** RCC is used to start the pump.

If **[Dec. Check Valve]** dECV = 0, the check-valve ramp is ignored and is used to decelerate down to **[Low Speed]** LSP, then **[Deceleration on Stop]** dECS is used (see below).

If **[Deceleration on Stop]** dECS = 0, the normal deceleration **[Deceleration]** dEC is used to stop the pump.

[Low Speed] LSP

Motor frequency at low speed.

Setting	Description
0.0...500.0 Hz	Setting range **Factory setting**: 0 Hz

[High Speed] H S P

Motor frequency at high speed.

Setting	Description
0.0...500.0 Hz	Setting range **Factory setting**: 50.0 Hz

[Ref Freq Template] b S P

Low speed management (template).

This parameter defines how the speed reference is taken into account, for analog inputs and pulse input only. In the case of the PID controller, this is the PID output reference.

The limits are set by the **[Low speed]** L S P and **[High speed]** H S P parameters.

Setting	Code / Value	Description
[Standard]	b S d	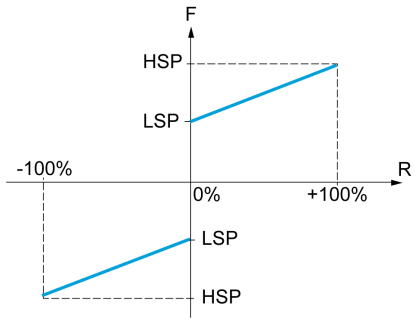 **F** Frequency **R** Reference At reference = 0, the frequency = **[Low speed]** L S P **Factory setting**
[Pedestal]	b L S	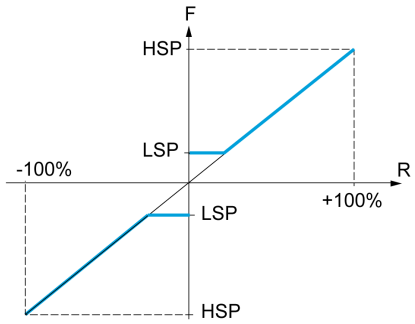 **F** Frequency **R** Reference At reference = 0 to **[Low speed]** L S P, the frequency = **[Low speed]** L S P

Setting	Code / Value	Description
[Deadband]	bnS	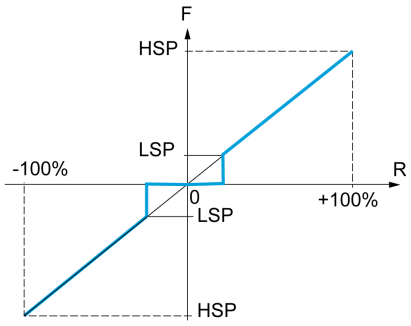 **F** Frequency **R** Reference At reference = 0 to LSP the frequency = 0
[Deadband at 0%]	bnS0	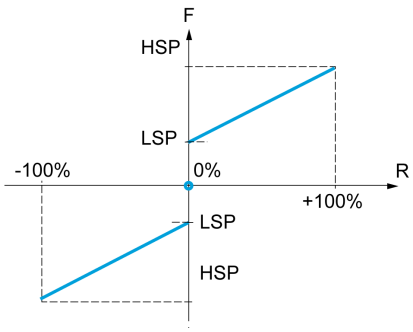 **F** Frequency **R** Reference This operation is the same as **[Standard]** bSd, except that in the following cases at zero reference, the frequency = 0: The signal is less than **[Min value]**, which is greater than 0 (example: 1 Vdc on a 2–10 Vdc input). The signal is greater than **[Min value]**, which is greater than **[Max value]** (example: 11 Vdc on a 10–0 Vdc input). If the input range is configured as “bidirectional”, the operation remains identical to **[Standard]** bSd.

Section 8.34
[Generic functions] - [Ramp]

[Ramp] rAMP - Menu

Access

[Complete settings] ➡ **[Generic functions]** ➡ **[Ramp]**

[Ramp Type] rPt

Type of ramp.

Setting	Code / Value	Description
[Linear]	LIn	Linear ramp **Factory setting**
[S-Ramp]	S	S ramp
[U-Ramp]	U	U ramp
[Customized]	CUS	Customer ramp

[Ramp increment] Inr

This parameter is valid for **[Acceleration]** ACC, **[Deceleration]** dEC, **[Acceleration 2]** AC2 and **[Deceleration 2]** dE2.

Setting	Code / Value	Description
[0.01]	0.01	Ramp up to 99.99 seconds
[0.1]	0.1	Ramp up to 999.9 seconds **Factory setting**
[1]	1	Ramp up to 6,000 seconds

[Acceleration] ACC

Time to accelerate from 0 to the **[Nominal Motor Freq]** FrS.

To have repeatability in ramps, the value of this parameter must be set according to the possibility of the application.

Setting	Description
0.00...6,000.00 s (1)	Setting range **Factory setting**: 10.00 s
(1) Range 0.01 to 99.99 s or 0.1 to 999.9 s or 1 to 6,000 according to **[Ramp increment]** Inr	

[Deceleration] dEC

Time to decelerate from the **[Nominal Motor Freq]** FrS to 0.

To have repeatability in ramps, the value of this parameter must be set according to the possibility of the application.

Setting	Description
0.00...6,000.00 s (1)	Setting range **Factory setting**: 10.00 s
(1) Range 0.01 to 99.99 s or 0.1 to 999.9 s or 1 to 6,000 according to **[Ramp increment]** Inr	

[Begin Acc round] tA1 ★

Rounding of start of acceleration ramp as a percentage of the **[Acceleration]** ACC or **[Acceleration 2]** AC2 ramp time.

Can be set from 0 to 100%.

This parameter can be accessed if the **[Ramp type]** rPt is set to **[Customized]** CUS.

Setting	Description
0...100%	Setting range **Factory setting**: 10%

[End Acc round] tA2 ★

Rounding of end of acceleration ramp as a percentage of the **[Acceleration]** ACC or **[Acceleration 2]** AC2 ramp time.

Can be set between 0 and (100% - **[Begin Acc round]** tA1).

This parameter can be accessed if the **[Ramp type]** rPt is set to **[Customized]** CUS.

Setting	Description
0...100%	Setting range **Factory setting**: 10%

[Begin Dec round] tA3 ★

Rounding of start of deceleration ramp as a percentage of the **[Deceleration]** dEC or **[Deceleration 2]** dE2 ramp time.

Can be set from 0 to 100%.

This parameter can be accessed if the **[Ramp type]** rPt is set to **[Customized]** CUS.

Setting	Description
0...100%	Setting range **Factory setting**: 10%

[End Dec round] tA4 ★

Rounding of end of deceleration ramp as a percentage of the **[Deceleration]** dEC or **[Deceleration 2]** dE2 ramp time.

Can be set between 0 and (100% - **[Begin Dec round]** tA3).

This parameter can be accessed if the **[Ramp type]** rPt is **[Customized]** CUS.

Setting	Description
0...100%	Setting range **Factory setting**: 10%

[Dec.Ramp Adapt] brA

Deceleration ramp adaptation.

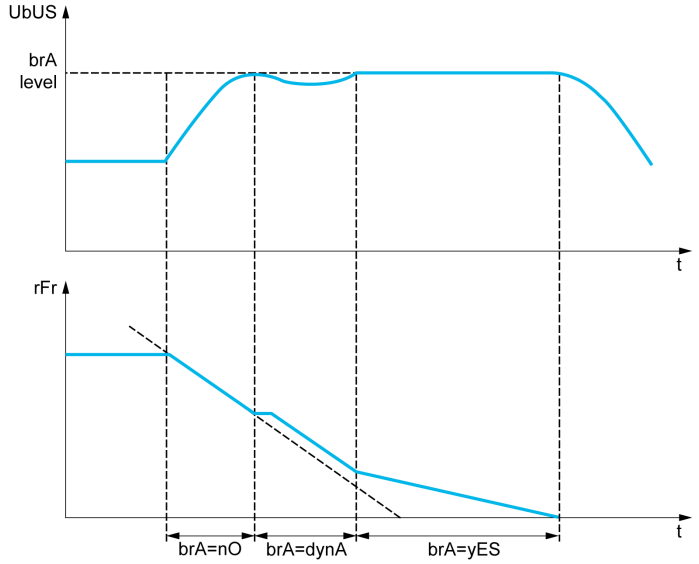

Activating this function automatically adapts the deceleration ramp, if this has been set at a too low value according to the inertia of the load, which can cause an overvoltage detected error.

The function is incompatible with applications requiring:

- Positioning on a ramp

Setting	Code / Value	Description
[No]	nO	Function inactive
[Yes]	YES	Function active, for applications that do not require strong deceleration **Factory setting**
[High Torque]	dYnA	Addition of a constant current flow component. The **[High Torque]** dYnA selection appears depending on the rating of the drive and **[Motor control type]** Ctt. It enables stronger deceleration to be obtained than with **[Yes]** YES. Use comparative testing to determine your selection When **[Dec.Ramp Adapt]** brA is configured on **[High torque]** dYnA, the dynamic performances for braking are improved by the addition of a current flow component. The aim is to increase the iron loss and magnetic energy stored in the motor.
NOTE: [Dec.Ramp Adapt] brA if forced to **[No]** nO if **[Motor control type]** Ctt is set to **[Rel. Mot.]** SrVC and **[Dec.Ramp Adapt]** brA was set to **[High Torque]** dYnA.		

Section 8.35
[Generic functions] - [Ramp switching]

[Ramp switching] rPt - Menu

Access

[Complete settings] ➡ **[Generic functions]** ➡ **[Ramp switching]**

[Ramp 2 Thd] Frt

Ramp 2 frequency threshold

The second ramp is switched if the value of **[Ramp 2 Thd]** Frt is not 0 (0 deactivates the function) and the output frequency is greater than **[Ramp 2 Thd]** Frt.

Threshold ramp switching can be combined with **[Ramp Switch Assign]** rPS switching as follows:

DI or Bit	Frequency	Ramp
0	< Frt	ACC, dEC
0	> Frt	AC2, dE2
1	< Frt	AC2, dE2
1	> Frt	AC2, dE2

Setting ❮❯	Description
0.0...500.0 Hz	Setting range **Factory setting**: 0.0 Hz

[Ramp Switch Assign] rPS

Ramp switching.

Setting	Code / Value	Description
[Not Assigned]	nO	Not assigned **Factory setting**
[DI1]...**[DI6]**	LI1...LI6	Digital input DI1...DI6
[DI11]...**[DI16]**	LI11...LI16	Digital input DI11...DI16 if VW3A3203 I/O extension module has been inserted
[CD00]...**[CD10]**	CD00...CD10	Virtual digital input CMD.0...CMD.10 in **[I/O profile]** IO configuration
[CD11]...**[CD15]**	CD11...CD15	Virtual digital input CMD.11...CMD.15 regardless of configuration
[C101]...**[C110]**	C101...C110	Virtual digital input CMD1.01...CMD1.10 with integrated Modbus Serial in **[I/O profile]** IO configuration
[C111]...**[C115]**	C111...C115	Virtual digital input CMD1.11...CMD1.15 with integrated Modbus Serial regardless of configuration
[C201]...**[C210]**	C201...C210	Virtual digital input CMD2.01...CMD2.10 with CANopen® fieldbus module in **[I/O profile]** IO configuration
[C211]...**[C215]**	C211...C215	Virtual digital input CMD2.11...CMD2.15 with CANopen® fieldbus module regardless of configuration
[C301]...**[C310]**	C301...C310	Virtual digital input CMD3.01...CMD3.10 with a fieldbus module in **[I/O profile]** IO configuration
[C311]...**[C315]**	C311...C315	Virtual digital input CMD3.11...CMD3.15 with a fieldbus module regardless of configuration
[C501]...**[C510]**	C501...C510	Virtual digital input CMD5.01...CMD5.10 with integrated Ethernet in **[I/O profile]** IO configuration
[C511]...**[C515]**	C511...C515	Virtual digital input CMD5.11...CMD5.15 with integrated Ethernet regardless of configuration

[Acceleration 2] AC2 ★

Acceleration 2 ramp time.

Time to accelerate from 0 to the **[Nominal Motor Freq]** FrS. To have repeatability in ramps, the value of this parameter must be set according to the possibility of the application.

This parameter can be accessed if **[Ramp 2 Thd]** Frt is greater than 0 or if **[Ramp Switch Assign]** rPS is assigned.

Setting	Description
0.0...6,000 s (1)	Setting range **Factory setting**: 5.0 s
(1) Range 0.01 to 99.99 s or 0.1 to 999.9 s or 1...6,000 s according to **[Ramp increment]** inr.	

[Deceleration 2] dE2 ★

Time to decelerate from the **[Nominal Motor Freq]** FrS to 0. To have repeatability in ramps, the value of this parameter must be set according to the possibility of the application.

This parameter can be accessed if:

- **[Ramp 2 Thd]** Frt is greater than 0, or
- **[Ramp Switch Assign]** rPS is assigned.

Setting	Description
0.0...6,000 s (1)	Setting range **Factory setting**: 5.0 s
(1) Range 0.01 to 99.99 s or 0.1 to 999.9 s or 1...6,000 s according to **[Ramp increment]** inr.	

Section 8.36
[Generic functions] - [Stop configuration]

[Stop configuration] 5 t t - Menu

Access

[Complete settings] ➡ **[Generic functions]** ➡ **[Stop configuration]**

About This Menu

NOTE: This function cannot be used with some other functions.

[Type of stop] 5 t t

Normal stop mode.

Stop mode on disappearance of the run command or appearance of a stop command.

Setting	Code / Value	Description
[On Ramp]	r M P	Stop on ramp **Factory setting**
[Fast stop]	F S t	Fast stop
[Freewheel]	n S t	Freewheel stop
[DC injection]	d C I	DC injection stop. Available if **[Motor control type]** C t t is not set to **[SYN_U VC]** S Y n u or **[Rel. Mot.]** S r V C.

[Freewheel stop ass.] n S t

Freewheel stop.

The stop is activated when the input or the bit changes to 0. If the input returns to state 1 and the run command is still active, the motor will only restart if **[2/3-wire control]** t C C is set to **[2-Wire Control]** 2 C and if **[2-wire type]** t C t is set to **[Level]** L E L or **[Fwd priority]** P F o. If not, a new run command must be sent.

Setting	Code / Value	Description
[Not Assigned]	n o	Not assigned **Factory setting**
[CD00]...**[CD10]**	C d 0 0...C d 1 0	Virtual digital input CMD.0...CMD.10 in **[I/O profile]** I o configuration
[CD11]...**[CD15]**	C d 1 1...C d 1 5	Virtual digital input CMD.11...CMD.15 regardless of configuration
[C101]...**[C110]**	C 1 0 1...C 1 1 0	Virtual digital input CMD1.01...CMD1.10 with integrated Modbus Serial in **[I/O profile]** I o configuration
[C111]...**[C115]**	C 1 1 1...C 1 1 5	Virtual digital input CMD1.11...CMD1.15 with integrated Modbus Serial regardless of configuration
[C201]...**[C210]**	C 2 0 1...C 2 1 0	Virtual digital input CMD2.01...CMD2.10 with CANopen® fieldbus module in **[I/O profile]** I o configuration
[C211]...**[C215]**	C 2 1 1...C 2 1 5	Virtual digital input CMD2.11...CMD2.15 with CANopen® fieldbus module regardless of configuration
[C301]...**[C310]**	C 3 0 1...C 3 1 0	Virtual digital input CMD3.01...CMD3.10 with a fieldbus module in **[I/O profile]** I o configuration
[C311]...**[C315]**	C 3 1 1...C 3 1 5	Virtual digital input CMD3.11...CMD3.15 with a fieldbus module regardless of configuration
[C501]...**[C510]**	C 5 0 1...C 5 1 0	Virtual digital input CMD5.01...CMD5.10 with integrated Ethernet Modbus TCP in **[I/O profile]** I o configuration
[C511]...**[C515]**	C 5 1 1...C 5 1 5	Virtual digital input CMD5.11...CMD5.15 with integrated Ethernet Modbus TCP regardless of configuration

Setting	Code / Value	Description
[DI1 (Low level)]...[DI6 (Low level)]	L 1L ... L 6L	Digital input DI1...DI6 used at low level
[DI11 (Low level)]...[DI16 (Low level)]	L 11L ... L 16L	Digital input DI11...DI16 used at low level if VW3A3203 I/O extension module has been inserted
[DI52 (Low level)]...[DI59 (Low level)]	d52L ... d59L	Digital input DI52…DI59 (low level) **NOTE:** This selection can be accessed on ATV660 and ATV680 equipped with Cabinet IO.
[DI52 (High level)]… [DI59 (High level)]	d52H ... d59H	Cabinet high level digital inputs **NOTE:** This selection can be accessed on ATV660 and ATV680 equipped with Cabinet IO.

[Freewheel stop Thd] FFt ★

Freewheel stop threshold.

Speed threshold below which the motor switches to freewheel stop.

This parameter supports switching from a ramp stop or a fast stop to a freewheel stop below a low speed threshold.

This parameter can be accessed:
- **[Type of stop]** Stt is set to **[Fast stop]** FSt or **[On Ramp]** rMP, and
- **[Auto DC Injection]** AdC is configured.

Setting	Description
0.2...500.0 Hz	Setting range **Factory setting**: 0.2 Hz

[Fast stop Assign] FSt

Fast stop.

The stop is activated when the input changes to 0 or the bit changes to 1 (bit in **[I/O profile]** Io at 0).

If the input returns to state 1 and the run command is still active, the motor will only restart if **[2/3-wire control]** tCC is set to **[2-Wire Control]** 2C and if **[2-wire type]** tCt is set to **[Level]** LEL or **[Fwd priority]** PFo.

If not, a new run command must be sent.

NOTE: This function cannot be used with some other functions.

Setting	Code / Value	Description
[Not Assigned]	nO	Not assigned **Factory setting**
[CD00]...[CD10]	CD00 ... CD10	Virtual digital input CMD.0...CMD.10 in **[I/O profile]** Io configuration
[CD11]...[CD15]	CD11 ... CD15	Virtual digital input CMD.11...CMD.15 regardless of configuration
[C101]...[C110]	C101 ... C110	Virtual digital input CMD1.01...CMD1.10 with integrated Modbus Serial in **[I/O profile]** Io configuration
[C111]...[C115]	C111 ... C115	Virtual digital input CMD1.11...CMD1.15 with integrated Modbus Serial regardless of configuration
[C201]...[C210]	C201 ... C210	Virtual digital input CMD2.01...CMD2.10 with CANopen® fieldbus module in **[I/O profile]** Io configuration
[C211]...[C215]	C211 ... C215	Virtual digital input CMD2.11...CMD2.15 with CANopen® fieldbus module regardless of configuration
[C301]...[C310]	C301 ... C310	Virtual digital input CMD3.01...CMD3.10 with a fieldbus module in **[I/O profile]** Io configuration
[C311]...[C315]	C311 ... C315	Virtual digital input CMD3.11...CMD3.15 with a fieldbus module regardless of configuration
[C501]...[C510]	C501 ... C510	Virtual digital input CMD5.01...CMD5.10 with integrated Ethernet Modbus TCP in **[I/O profile]** Io configuration

Setting	Code / Value	Description
[C511]...**[C515]**	C511...C515	Virtual digital input CMD5.11...CMD5.15 with integrated Ethernet Modbus TCP regardless of configuration
[DI1 (Low level)]...**[DI6 (Low level)]**	LIL...L6L	Digital input DI1...DI6 used at low level
[DI11 (Low level)]...**[DI16 (Low level)]**	LI1L...LI6L	Digital input DI11...DI16 used at low level if VW3A3203 I/O extension module has been inserted

[Ramp Divider] dCF ★

Fast Stop deceleration ramp reduction coefficient.

The ramp that is enabled (**[Deceleration]** dEC or **[Deceleration 2]** dE2) is then divided by this coefficient when stop requests are sent.

Value 0 corresponds to a minimum ramp time.

Setting ( )	Description
0...10	Setting range **Factory setting**: 4

[DC Injection Assign] dC1

DC injection brake assignment.

⚠ WARNING

UNINTENDED MOVEMENT

- Do not use DC injection to generate holding torque when the motor is at a standstill.
- Use a holding brake to keep the motor in the standstill position.

Failure to follow these instructions can result in death, serious injury, or equipment damage.

This parameter can be accessed if **[Motor control type]** Ctt is not set to **[SYN_U VC]** SYnU or **[Rel. Mot.]** SrVC.

DC injection braking is initiated when the assigned input or bit changes to state 1.

If the input returns to state 0 and the run command is still active, the motor will only restart if **[2/3-wire control]** tCC is set to **[2-Wire Control]** 2C and if **[2-wire type]** tCt is set to **[Level]** LEL or **[Fwd priority]** PFo. If not, a new run command must be sent.

NOTE: This function cannot be used with some other functions.

Setting	Code / Value	Description
[Not Assigned]	no	Not assigned **Factory setting**
[DI1]...**[DI6]**	LI1...LI6	Digital input DI1...DI6
[DI11]...**[DI16]**	LI11...LI16	Digital input DI11...DI16 if VW3A3203 I/O extension module has been inserted
[CD00]...**[CD10]**	CD00...CD10	Virtual digital input CMD.0...CMD.10 in **[I/O profile]** IO configuration
[CD11]...**[CD15]**	CD11...CD15	Virtual digital input CMD.11...CMD.15 regardless of configuration
[C101]...**[C110]**	C101...C110	Virtual digital input CMD1.01...CMD1.10 with integrated Modbus Serial in **[I/O profile]** IO configuration
[C111]...**[C115]**	C111...C115	Virtual digital input CMD1.11...CMD1.15 with integrated Modbus Serial regardless of configuration
[C201]...**[C210]**	C201...C210	Virtual digital input CMD2.01...CMD2.10 with CANopen® fieldbus module in **[I/O profile]** IO configuration
[C211]...**[C215]**	C211...C215	Virtual digital input CMD2.11...CMD2.15 with CANopen® fieldbus module regardless of configuration

Setting	Code / Value	Description
[C301]...**[C310]**	C301...C310	Virtual digital input CMD3.01...CMD3.10 with a fieldbus module in **[I/O profile]** IO configuration
[C311]...**[C315]**	C311...C315	Virtual digital input CMD3.11...CMD3.15 with a fieldbus module regardless of configuration
[C501]...**[C510]**	C501...C510	Virtual digital input CMD5.01...CMD5.10 with integrated Ethernet in **[I/O profile]** IO configuration
[C511]...**[C515]**	C511...C515	Virtual digital input CMD5.11...CMD5.15 with integrated Ethernet regardless of configuration

[DC inject. level 1] IdC ★

DC injection current.

NOTICE
OVERHEATING AND DAMAGE TO THE MOTOR Verify that the connected motor is properly rated for the DC injection current to be applied in terms of amount and time in order to avoid overheating and damage to the motor. **Failure to follow these instructions can result in equipment damage.**

Level of DC injection braking current activated via digital input or selected as stop mode.

This parameter can be accessed if:
- **[Type of stop]** Stt is set to **[DC injection]** dC 1, or
- **[DC.Brake DI]** dC 1 is not set to **[No]** no.

Setting ❮❯	Description
0.1...1.41 In (1)	Setting range This setting is independent of the **[Auto DC Injection]** AdC - function. **Factory setting**: 0.7 In (1)
(1) In corresponds to the rated drive current indicated in the Installation Manual and on the drive nameplate.	

[DC injection time 1] tdI ★

DC injection time 1.

NOTICE
OVERHEATING AND DAMAGE TO THE MOTOR Verify that the connected motor is properly rated for the DC injection current to be applied in terms of amount and time in order to avoid overheating and damage to the motor. **Failure to follow these instructions can result in equipment damage.**

Maximum current injection time **[DC inject. level 1]** IdC. After this time, the injection current becomes **[DC inject. level 2]** IdC2.

This parameter can be accessed if:
- **[Type of stop]** Stt is set to **[DC injection]** dC 1, or
- **[DC.Brake DI]** dC 1 is not set to **[No]** no.

Setting ❮❯	Description
0.1...30 s	Setting range This setting is independent of the **[Auto DC Injection]** AdC - function. **Factory setting**: 0.5 s

[DC inject. level 2] ★

DC injection current 2.

NOTICE
OVERHEATING AND DAMAGE TO THE MOTOR Verify that the connected motor is properly rated for the DC injection current to be applied in terms of amount and time in order to avoid overheating and damage to the motor. **Failure to follow these instructions can result in equipment damage.**

Injection current activated by digital input or selected as stop mode once period **[DC injection time 1]** has elapsed.

This parameter can be accessed if:

- **[Type of stop]** is set to **[DC injection]**, or
- **[DC Injection Assign]** is not set to **[No]**.

Setting	Description
0.1 In (1)...**[DC inject. level 1]**	Setting range This setting is independent of the **[Auto DC Injection]** function. **Factory setting**: 0.5 In (1)
(1) In corresponds to the rated drive current indicated in the Installation Manual and on the drive nameplate.	

[DC Inj Time 2] ★

2nd DC injection time.

NOTICE
OVERHEATING AND DAMAGE TO THE MOTOR Verify that the connected motor is properly rated for the DC injection current to be applied in terms of amount and time in order to avoid overheating and damage to the motor. **Failure to follow these instructions can result in equipment damage.**

Maximum injection time **[DC inject. level 2]** for injection, selected as stop mode only.

This parameter can be accessed if **[Type of stop]** is set to **[DC injection]**.

Setting	Description
0.1...30 s	Setting range This setting is independent of the **[Auto DC Injection]** function. **Factory setting**: 0.5 s

[SwitchOnDisable Stp]

Disable operation stop mode.

Setting	Code / Value	Description
[Freewheel Stop]		Disable drive function
[Ramp Stop]		Ramp stop then disable drive function **Factory setting**

Section 8.37
[Generic functions] - [Auto DC injection]

[Auto DC injection] AdC - Menu

Access

[Complete settings] ➡ [Generic functions] ➡ [Auto DC injection]

About This Menu

This menu presents the automatic injection of motor current function. This is used to hold the rotor of the motor at the end of the deceleration ramp.

[Auto DC Injection] AdC

Automatic DC Injection.

⚠⚠ DANGER

HAZARD OF ELECTRIC SHOCK, EXPLOSION, OR ARC FLASH

If the parameter **[Auto DC Injection]** AdC is set to **[Continuous]** Ct, DC injection is always active, even if the motor does not run.

- Verify that using this setting does not result in unsafe conditions.

Failure to follow these instructions will result in death or serious injury.

⚠ WARNING

UNINTENDED MOVEMENT

- Do not use DC injection to generate holding torque when the motor is at a standstill.
- Use a holding brake to keep the motor in the standstill position.

Failure to follow these instructions can result in death, serious injury, or equipment damage.

Automatic current injection on stopping (at the end of the ramp).

Setting	Code / Value	Description
[No]	nO	No injection
[Yes]	YES	Adjustable injection time **Factory setting**
[Continuous]	Ct	Continuous standstill injection

[Auto DC inj Level 1] SdC 1★

Auto DC injection level 1.

NOTICE
OVERHEATING AND DAMAGE TO THE MOTOR Verify that the connected motor is properly rated for the DC injection current to be applied in terms of amount and time in order to avoid overheating and damage to the motor. **Failure to follow these instructions can result in equipment damage.**

Level of standstill DC injection current.

This parameter can be accessed if **[Auto DC Injection]** AdC is not set to **[No]** nO.

Setting	Description
0...1.1 In (1)	Setting range **Factory setting**: 0.7 In (1)
(1) In corresponds to the rated drive current indicated in the Installation Manual and on the drive nameplate.	

[Auto DC Inj Time 1] tdC 1★

Auto DC injection time 1.

NOTICE
OVERHEATING AND DAMAGE TO THE MOTOR Verify that the connected motor is properly rated for the DC injection current to be applied in terms of amount and time in order to avoid overheating and damage to the motor. **Failure to follow these instructions can result in equipment damage.**

This parameter can be accessed if **[Auto DC Injection]** AdC is not set to **[No]** nO.

This time corresponds to the zero speed maintenance time, if **[Motor control type]** Ctt is set to **[SYN_U VC]** SYnU or **[Rel. Mot.]** SrVC.

Setting	Description
0.1...30.0 s	Setting range **Factory setting**: 0.5 s

[Auto DC inj Level 2] SdC2★

Auto DC injection level 2.

NOTICE
OVERHEATING AND DAMAGE TO THE MOTOR Verify that the connected motor is properly rated for the DC injection current to be applied in terms of amount and time in order to avoid overheating and damage to the motor. **Failure to follow these instructions can result in equipment damage.**

Second level of standstill DC injection current.

This parameter can be accessed if **[Auto DC Injection]** AdC is not set to **[No]** nO.

Setting	Description
0...1.1 In (1)	Setting range **Factory setting**: 0.5 In (1)
(1) In corresponds to the rated drive current indicated in the Installation Manual and on the drive nameplate.	

[Auto DC Inj Time 2] tdC2 ★

Auto DC injection time 2.

NOTICE
OVERHEATING AND DAMAGE TO THE MOTOR Verify that the connected motor is properly rated for the DC injection current to be applied in terms of amount and time in order to avoid overheating and damage to the motor. **Failure to follow these instructions can result in equipment damage.**

Second standstill injection time.

This parameter can be accessed if **[Auto DC Injection]** AdC is set to **[YES]** YES.

AdC	SdC2	Operation
YES	x	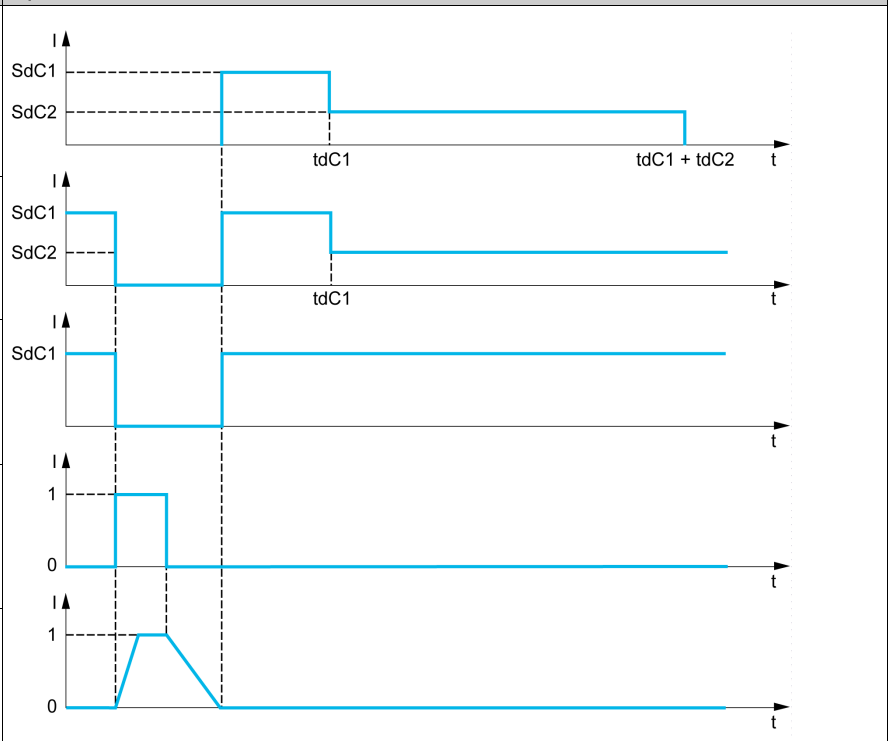
Ct	≠ 0	
Ct	= 0	
Run command		
Speed		

Setting	Description
0.0...30.0 s	Setting range **Factory setting**: 0.0 s

Section 8.38
[Generic functions] - [Ref. operations]

[Ref. operations] oA1- Menu

Access

[Complete settings] ➡ **[Generic functions]** ➡ **[Ref. operations]**

About This Menu

Summing input / subtraction input / multiplier

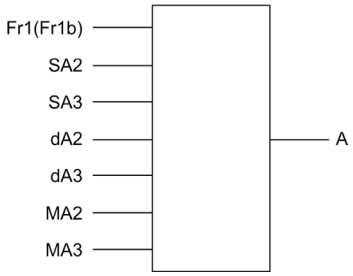

A (Fr1 or Fr1b + SA2 + SA3 - dA2 - dA3) x MA2 x MA3

NOTE:
- If SA2, SA3, dA2, dA3 are not assigned, they are set to 0.
- If MA2, MA3 are not assigned, they are set to 1.
- A is limited by the minimum LSP and maximum HSP parameters.
- For a multiplication, the signal on MA2 or MA3 is interpreted as a %. 100% corresponds to the maximum value of the corresponding input. If MA2 or MA3 is sent via the communication bus or Graphic Display Terminal, an MFr multiplication variable must be sent via the bus or Graphic Display Terminal.
- Reversal of the direction of operation in the event of a negative result can be blocked (see **[Reverse Disable]** rIn).

[Summing Input 2] SA2

Summing input 2.

Selection of a reference to be added to **[Ref Freq 1 Config]** Fr1 or **[Ref.1B channel]** Fr1b.

Setting	Code / Value	Description
[Not Configured]	nO	Not assigned
[AI1]	AI1	Analog input AI1 **Factory Setting**
[AI2]...**[AI3]**	AI2...AI3	Analog input AI2...AI3
[AI4]...**[AI5]**	AI4...AI5	Analog input AI4...AI5 if VW3A3203 I/O extension module has been inserted
[Ref Frequency via DI]	uPdt	Up/Down function is assigned by DIx
[Ref. Freq- Rmt. Term]	LCC	Reference Frequency via remote terminal
[Ref. Freq-Modbus]	Mdb	Reference frequency via Modbus
[Ref. Freq-CANopen]	CAn	Reference frequency via CANopen if a CANopen module has been inserted
[Ref. Freq-Com. Module]	nEt	Reference frequency via fieldbus module if a fieldbus module has been inserted
[Embedded Ethernet]	EtH	Embedded Ethernet
[AI Virtual 1]...**[AI Virtual 3]**	AIV1...AIV3	Virtual analogic input 1...3

Setting	Code / Value	Description
[DI5 PulseInput Assignment]...[DI6 PulseInput Assignment]	P I5...P I6	Digital input DI5...DI6 used as pulse input

[Summing Input 3] SA3

Summing input 3.

Selection of a reference to be added to **[Ref Freq 1 Config]** Fr1 or **[Ref.1B channel]** Fr1b.

Identical to **[Summing Input 2]** SA2

[Subtract Ref Freq 2] dA2

Subtract reference frequency 2.

Selection of a reference to be subtracted from **[Ref Freq 1 Config]** Fr1 or **[Ref.1B channel]** Fr1b.

Identical to **[Summing Input 2]** SA2

[Subtract Ref Freq 3] dA3

Subtract reference frequency 3.

Selection of a reference to be subtracted from **[Ref Freq 1 Config]** Fr1 or **[Ref.1B channel]** Fr1b.

Identical to **[Summing Input 2]** SA2.

[Ref Freq 2 Multiply] MA2

Reference frequency 2 multiply (in % of the source range).

Selection of a multiplier reference **[Ref Freq 1 Config]** Fr1 or **[Ref.1B channel]** Fr1b.

Identical to **[Summing Input 2]** SA2.

[Ref Freq 3 Multiply] MA3

Reference frequency 3 multiply (in % of the source range).

Selection of a multiplier reference **[Ref Freq 1 Config]** Fr1 or **[Ref.1B channel]** Fr1b.

Identical to **[Summing Input 2]** SA2.

Section 8.39
[Generic functions] - [Preset speeds]

[Preset speeds] PSS - Menu

Access

[Complete settings] ➡ **[Generic functions]** ➡ **[Preset speeds]**

About This Menu

NOTE: This function cannot be used with some other functions.

Combination Table for Preset Speed Inputs

2, 4, 8 or 16 speeds can be preset, requiring 1, 2, 3 or 4 digital inputs respectively.

It is necessary to configure:
- 2 and 4 speeds in order to obtain 4 speeds.
- 2, 4 and 8 speeds in order to obtain 8 speeds.
- 2, 4, 8 and 16 speeds in order to obtain 16 speeds.

16 Preset Freq (PS16)	8 Preset Freq (PS8)	4 Preset Freq (PS4)	2 Preset Freq (PS2)	Speed Reference
0	0	0	0	Reference 1 (1)
0	0	0	1	SP2
0	0	1	0	SP3
0	0	1	1	SP4
0	1	0	0	SP5
0	1	0	1	SP6
0	1	1	0	SP7
0	1	1	1	SP8
1	0	0	0	SP9
1	0	0	1	SP10
1	0	1	0	SP11
1	0	1	1	SP12
1	1	0	0	SP13
1	1	0	1	SP14
1	1	1	0	SP15
1	1	1	1	SP16

(1) Reference 1 = SPI, refer to diagram *(see page 238)*

[2 Preset Freq] PS2

2 preset freq assignment.

Setting	Code / Value	Description
[Not Assigned]	nO	Not assigned **Factory setting**
[DI1]...**[DI6]**	LI1...LI6	Digital input DI1...DI6
[DI11]...**[DI16]**	LI11...LI16	Digital input DI11...DI16 if VW3A3203 I/O extension module has been inserted
[CD00]...**[CD10]**	CD00...CD10	Virtual digital input CMD.0...CMD.10 in **[I/O profile]** IO configuration
[CD11]...**[CD15]**	CD11...CD15	Virtual digital input CMD.11...CMD.15 regardless of configuration

Setting	Code / Value	Description
[C101]...**[C110]**	C101...C110	Virtual digital input CMD1.01...CMD1.10 with integrated Modbus Serial in **[I/O profile]** IO configuration
[C111]...**[C115]**	C111...C115	Virtual digital input CMD1.11...CMD1.15 with integrated Modbus Serial regardless of configuration
[C201]...**[C210]**	C201...C210	Virtual digital input CMD2.01...CMD2.10 with CANopen® fieldbus module in **[I/O profile]** IO configuration
[C211]...**[C215]**	C211...C215	Virtual digital input CMD2.11...CMD2.15 with CANopen® fieldbus module regardless of configuration
[C301]...**[C310]**	C301...C310	Virtual digital input CMD3.01...CMD3.10 with a fieldbus module in **[I/O profile]** IO configuration
[C311]...**[C315]**	C311...C315	Virtual digital input CMD3.11...CMD3.15 with a fieldbus module regardless of configuration
[C501]...**[C510]**	C501...C510	Virtual digital input CMD5.01...CMD5.10 with integrated Ethernet in **[I/O profile]** IO configuration
[C511]...**[C515]**	C511...C515	Virtual digital input CMD5.11...CMD5.15 with integrated Ethernet regardless of configuration

[4 Preset Freq] P54

4 preset freq assignment.

Identical to **[2 Preset Freq]** P52

To obtain 4 speeds, you must also configure 2 speeds.

[8 Preset Freq] P58

8 preset freq assignment.

Identical to **[2 Preset Freq]** P52

To obtain 8 speeds, you must also configure 2 and 4 speeds.

[16 Preset Freq] P516

16 preset freq assignment.

Identical to **[2 Preset Freq]** P52

To obtain 16 speeds, you must also configure 2, 4 and 8 speeds.

[Preset speed 2] SP2 ★

Preset speed 2. See the combination table for preset speed inputs *(see page 428)*.

Setting	Description
0.0...500.0 Hz	Setting range **Factory setting**: 10.0 Hz

[Preset speed 3] SP3 ★

Preset speed 3. See the combination table for preset speed inputs *(see page 428)*.

Setting	Description
0.0...500.0 Hz	Setting range **Factory setting**: 15.0 Hz

[Preset speed 4] SP4 ★

Preset speed 4. See the combination table for preset speed inputs *(see page 428)*.

Setting	Description
0.0...500.0 Hz	Setting range **Factory setting**: 20.0 Hz

[Preset speed 5] 5 P 5 ★

Preset speed 5. See the combination table for preset speed inputs *(see page 428)*.

Setting ❮❯	Description
0.0...500.0 Hz	Setting range **Factory setting**: 25.0 Hz

[Preset speed 6] 5 P 6 ★

Preset speed 6. See the combination table for preset speed inputs *(see page 428)*.

Setting ❮❯	Description
0.0...500.0 Hz	Setting range **Factory setting**: 30.0 Hz

[Preset speed 7] 5 P 7 ★

Preset speed 7. See the combination table for preset speed inputs *(see page 428)*.

Setting ❮❯	Description
0.0...500.0 Hz	Setting range **Factory setting**: 35.0 Hz

[Preset speed 8] 5 P 8 ★

Preset speed 8. See the combination table for preset speed inputs *(see page 428)*.

Setting ❮❯	Description
0.0...500.0 Hz	Setting range **Factory setting**: 40.0 Hz

[Preset speed 9] 5 P 9 ★

Preset speed 9. See the combination table for preset speed inputs *(see page 428)*.

Setting ❮❯	Description
0.0...500.0 Hz	Setting range **Factory setting**: 45.0 Hz

[Preset speed 10] 5 P 10 ★

Preset speed 10. See the combination table for preset speed inputs *(see page 428)*.

Setting ❮❯	Description
0.0...500.0 Hz	Setting range **Factory setting**: 50.0 Hz

[Preset speed 11] 5 P 11 ★

Preset speed 11. See the combination table for preset speed inputs *(see page 428)*.

Setting ❮❯	Description
0.0...500.0 Hz	Setting range **Factory setting**: 55.0 Hz

[Preset speed 12] 5P 12 ★

Preset speed 12. See the combination table for preset speed inputs *(see page 428)*.

Setting ❮❯	Description
0.0...500.0 Hz	Setting range **Factory setting**: 60.0 Hz

[Preset speed 13] 5P 13 ★

Preset speed 13. See the combination table for preset speed inputs *(see page 428)*.

Setting ❮❯	Description
0.0...500.0 Hz	Setting range **Factory setting**: 70.0 Hz

[Preset speed 14] 5P 14 ★

Preset speed 14. See the combination table for preset speed inputs *(see page 428)*.

Setting ❮❯	Description
0.0...500.0 Hz	Setting range **Factory setting**: 80.0 Hz

[Preset speed 15] 5P 15 ★

Preset speed 15 See the combination table for preset speed inputs *(see page 428)*.

Setting ❮❯	Description
0.0...500.0 Hz	Setting range **Factory setting**: 90.0 Hz

[Preset speed 16] 5P 16 ★

Preset speed 16. See the combination table for preset speed inputs *(see page 428)*.

Setting ❮❯	Description
0.0...500.0 Hz	Setting range **Factory setting**: 100.0 Hz

Section 8.40
[Generic functions] - [+/- speed]

[+/- speed] uPd - Menu

Access

[Complete settings] ➡ **[Generic functions]** ➡ **[+/- speed]**

About This Menu

This function can be accessed if reference channel **[Ref Freq 2 Config]** Fr2 is set to **[Ref Frequency via DI]** uPdt

NOTE: This function cannot be used with some other functions.

2 types of operations are available:

- **Use of single action keys:** 2 digital inputs are required in addition to the operating directions. The input assigned to the “+ speed” command increases the speed, the input assigned to the “– speed” command decreases the speed.
- **Use of double action keys:** Only one digital input assigned to “+ speed” is required.

+/– speed with double-press buttons:

Description: 1 button pressed twice (2 steps) for each direction of rotation. A contact closes each time the button is pressed.

Setting	Released (– Speed)	First Press (Speed Maintained)	Second Press (Faster)
Forward button	–	a	a and b
Reverse button	–	c	c and d

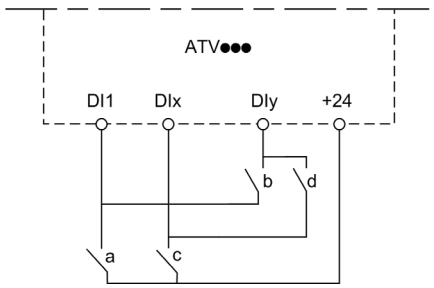

DI1 Forward
DIx Reverse
DIy + speed

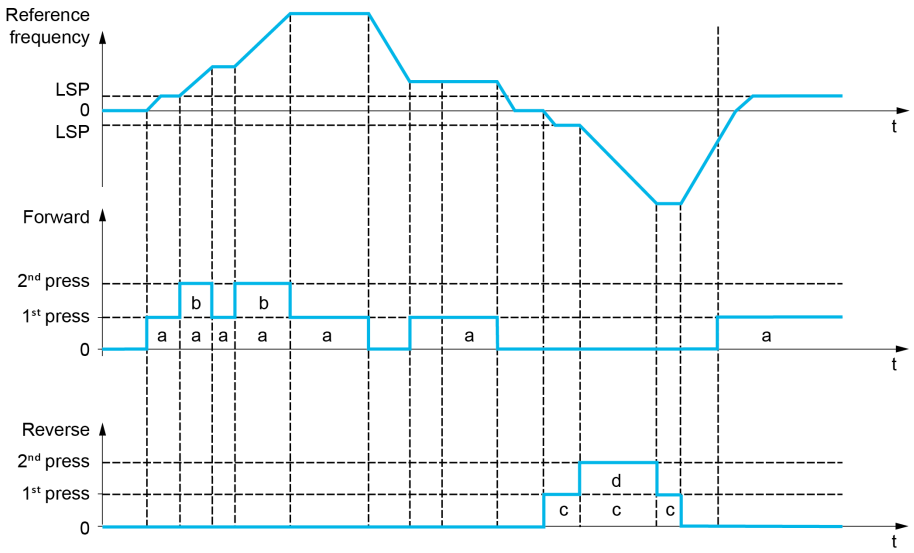

Do not use this +/– speed type with a 3-wire control.

Whichever type of operation is selected, the max. speed is set by **[High speed]** *HSP*.

NOTE: If the reference is switched via **[Freq Switch Assign]** *rFC* from any reference channel to another reference channel with "+/– speed", the value of reference **[Motor Frequency]** *rFr* (after ramp) may be copied at the same time in accordance with the **[Copy Ch1-Ch2]** *CoP* parameter.
This helps to prevent the speed from being incorrectly reset to zero when switching takes place.

[+ Speed Assign] *USP*

Increase speed input assignment.

Function active if the assigned input or bit is at 1.

Setting	Code / Value	Description
[Not Assigned]	*no*	Not assigned **Factory setting**
[DI1]...**[DI6]**	*LI1*...*LI6*	Digital input DI1...DI6
[DI11]...**[DI16]**	*LI11*...*LI16*	Digital input DI11...DI16 if VW3A3203 I/O extension module has been inserted
[CD00]...**[CD10]**	*Cd00*...*Cd10*	Virtual digital input CMD.0...CMD.10 in **[I/O profile]** *IO* configuration
[CD11]...**[CD15]**	*Cd11*...*Cd15*	Virtual digital input CMD.11...CMD.15 regardless of configuration
[C101]...**[C110]**	*C101*...*C110*	Virtual digital input CMD1.01...CMD1.10 with integrated Modbus Serial in **[I/O profile]** *IO* configuration
[C111]...**[C115]**	*C111*...*C115*	Virtual digital input CMD1.11...CMD1.15 with integrated Modbus Serial regardless of configuration
[C201]...**[C210]**	*C201*...*C210*	Virtual digital input CMD2.01...CMD2.10 with CANopen® fieldbus module in **[I/O profile]** *IO* configuration
[C211]...**[C215]**	*C211*...*C215*	Virtual digital input CMD2.11...CMD2.15 with CANopen® fieldbus module regardless of configuration
[C301]...**[C310]**	*C301*...*C310*	Virtual digital input CMD3.01...CMD3.10 with a fieldbus module in **[I/O profile]** *IO* configuration
[C311]...**[C315]**	*C311*...*C315*	Virtual digital input CMD3.11...CMD3.15 with a fieldbus module regardless of configuration
[C501]...**[C510]**	*C501*...*C510*	Virtual digital input CMD5.01...CMD5.10 with integrated Ethernet in **[I/O profile]** *IO* configuration
[C511]...**[C515]**	*C511*...*C515*	Virtual digital input CMD5.11...CMD5.15 with integrated Ethernet regardless of configuration

[- Speed Assign] d S P

Down speed input assignment. See the assignment conditions.

Parameter settings identical to **[+ Speed Assign]** u S P.

Function active if the assigned input or bit is at 1.

[Ref Frequency Save] S t r ★

Reference frequency saves. This parameter can be accessed if **[+ Speed Assign]** u S P is not set to **[Not Assigned]** n o or **[- Speed Assign]** d S P is not set to **[Not Assigned]** n o.

Associated with the "+/– speed" function, this parameter can be used to save the reference:
- When the run commands disappear (saved to RAM).
- When the supply mains or the run commands disappear (saved to EEPROM).

Therefore, next time the drive starts up, the speed reference is the last reference frequency saved.

Setting	Code / Value	Description
[No save]	n o	Not saved **Factory setting**
[Save to RAM]	r A M	+/- speed with saving of the reference frequency in RAM
[Save to EEprom]	E E P	+/- speed with saving of the reference frequency in EEPROM

Section 8.41
[Generic functions] - [Jump frequency]

[Jump frequency] JuF - Menu

Access

[Complete settings] ➡ [Generic functions] ➡ [Jump frequency]

About This Menu

Identical to **[Jump frequency]** JuF - Menu *(see page 406)*.

Section 8.42
[Generic functions] - [PID controller]

[PID Controller] P id - Menu

Access

[Complete settings] ➡ [Generic functions] ➡ [PID Controller]

About This Menu

Identical to **[PID Controller]** P id - Menu *(see page 303)*.

Section 8.43
[Generic functions] - [Feedback mon.]

[Feedback monitoring] *F K П* - Menu

Access

[Complete settings] ➡ **[Generic functions]** ➡ **[Feedback monitoring]**

About This Menu

Identical to **[Feedback monitoring]** *F K П* - Menu *(see page 336)*.

Section 8.44
[Generic functions] - [Threshold reached]

[Threshold reached] tHrE - Menu

Access

[Complete settings] ➡ **[Generic functions]** ➡ **[Threshold reached]**

[Low I Threshold] CtdL

Current low threshold value (for **[Low Current Reached]** CtAL warning).

Setting ❮❯	Description
0...65,535 A	Setting range **Factory setting**: 0 A

[High Current Thd] Ctd

Current high threshold value (for **[Current Thd Reached]** CtA warning).

Setting ❮❯	Description
0...65,535 A	Setting range **Factory setting**: Drive nominal current

[Low Freq. Threshold] FtdL

Motor low frequency threshold (for **[Mot Freq Low Thd]** FtAL warning).

Setting ❮❯	Description
0.0...500.0 Hz	Setting range **Factory setting**: 0.0 Hz

[Motor Freq Thd] Ftd

Motor frequency threshold (for **[Mot Freq High Thd]** FtA warning).

Setting ❮❯	Description
0.0...500.0 Hz	Setting range **Factory setting**: 50.0 Hz

[2 Freq. Threshold] F2dL

Motor low frequency second threshold (for **[Mot Freq Low Thd 2]** F2AL warning).

Setting ❮❯	Description
0.0...500.0 Hz	Setting range **Factory setting**: 0.0 Hz

[Freq. threshold 2] F2d

Motor frequency threshold 2 (for **[Mot Freq High Thd 2]** F2A warning).

Setting ❮❯	Description
0.0...500.0 Hz	Setting range **Factory setting**: 50.0 Hz

[Motor Thermal Thd] tthd

Motor thermal state threshold (for **[Motor Therm Thd reached]** tSA warning).

Setting	Description
0...118%	Setting range **Factory setting**: 100%

[Reference high Thd] rthd

Reference frequency high threshold (for **[Ref Freq High Thd reached]** rtAH warning).

Setting	Description
0.0...500.0 Hz	Setting range **Factory setting**: 0.0 Hz

[Reference low Thd] rtdL

Reference frequency low threshold (for **[Ref Freq Low Thd reached]** rtAL warning).

Setting	Description
0.0...500.0 Hz	Setting range **Factory setting**: 0.0 Hz

[High torque thd.] tthH

High torque threshold (for **[High Torque Warning]** ttHA warning).

Setting	Description
-300...300%	Setting range **Factory setting**: 100%

[Low torque thd.] ttL

Low torque threshold (for **[Low Torque Warning]** ttLA warning).

Setting	Description
-300...300%	Setting range **Factory setting**: 50%

Section 8.45
[Generic functions] - [Mains contactor command]

[Mains contactor command] LLC - Menu

Access

[Complete settings] ➞ **[Generic functions]** ➞ **[Mains contactor command]**

About This Menu

The line contactor closes every time a run command (forward or reverse) is sent and opens after every stop, as soon as the drive is locked. For example, if the stop mode is stop on ramp, the contactor opens when the motor reaches zero speed.

NOTE: The drive control power supply must be provided via an external 24 Vdc source.

NOTICE
DAMAGE TO THE DRIVE Do not use this function at intervals of less than 60 s. **Failure to follow these instructions can result in equipment damage.**

Example circuit (24 Vdc power supply):

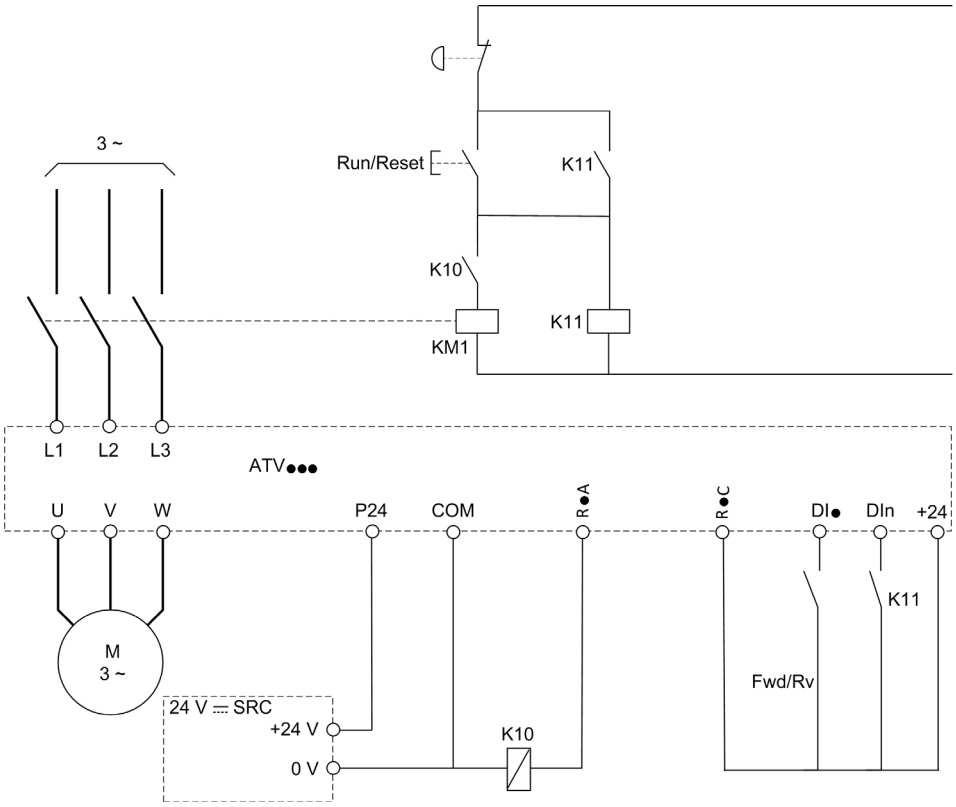

DI• = Run command **[Forward]** FrD or **[Reverse]** rrS

R•A/R•C = **[Mains Contactor]** LLC

DIn = **[Drive Lock]** LES

NOTE: The Run/Reset key must be pressed once the emergency stop key has been released.

[Mains Contactor] LLC

Mains contactor control.

Setting	Code / Value	Description
[No]	nO	Not assigned **Factory setting**
[R2]...**[R3]**	r2...r3	Relay output R2...R3
[R4]...**[R6]**	r4...r6	Relay output R4...R6 if VW3A3204 relay output option module has been inserted
[DQ11 Digital Output]...**[DQ12 Digital Output]**	do11...do12	Digital output DQ11...DQ12 if VW3A3203 I/O extension module has been inserted
[R61]…**[R66]**	r61...r66	Relay R61 …R66 **NOTE:** This selection can be accessed on ATV660 and ATV680 equipped with Cabinet IO

[Drive Lock] LES ★

Drive lock assignment.

This parameter can be accessed if **[Mains Contactor]** LLC is not set to **[No]** nO.

The drive locks when the assigned input or bit changes to 0.

Setting	Code / Value	Description
[Not Assigned]	nO	Not assigned **Factory setting**
[CD00]...**[CD10]**	CD00...CD10	Virtual digital input CMD.0...CMD.10 in **[I/O profile]** IO configuration
[CD11]...**[CD15]**	CD11...CD15	Virtual digital input CMD.11...CMD.15 regardless of configuration
[C101]...**[C110]**	C101...C110	Virtual digital input CMD1.01...CMD1.10 with integrated Modbus Serial in **[I/O profile]** IO configuration
[C111]...**[C115]**	C111...C115	Virtual digital input CMD1.11...CMD1.15 with integrated Modbus Serial regardless of configuration
[C201]...**[C210]**	C201...C210	Virtual digital input CMD2.01...CMD2.10 with CANopen® fieldbus module in **[I/O profile]** IO configuration
[C211]...**[C215]**	C211...C215	Virtual digital input CMD2.11...CMD2.15 with CANopen® fieldbus module regardless of configuration
[C301]...**[C310]**	C301...C310	Virtual digital input CMD3.01...CMD3.10 with a fieldbus module in **[I/O profile]** IO configuration
[C311]...**[C315]**	C311...C315	Virtual digital input CMD3.11...CMD3.15 with a fieldbus module regardless of configuration
[C501]...**[C510]**	C501...C510	Virtual digital input CMD5.01...CMD5.10 with integrated Ethernet Modbus TCP in **[I/O profile]** IO configuration
[C511]...**[C515]**	C511...C515	Virtual digital input CMD5.11...CMD5.15 with integrated Ethernet Modbus TCP regardless of configuration
[DI1 (Low level)]...**[DI6 (Low level)]**	LIL...L6L	Digital input DI1...DI6 used at low level
[DI11 (Low level)]...**[DI16 (Low level)]**	LI1L...LI6L	Digital input DI11...DI16 used at low level if VW3A3203 I/O extension module has been inserted
[DI52 (Low level)]...**[DI59 (Low level)]**	d52L...d59L	Digital input DI52…DI59 (low level) **NOTE:** This selection can be accessed on ATV660 and ATV680 equipped with Cabinet IO.
[DI52 (High level)]… **[DI59 (High level)]**	d52H...d59H	Cabinet high level digital inputs **NOTE:** This selection can be accessed on ATV660 and ATV680 equipped with Cabinet IO.

[Mains V. time out] LCt

Monitoring time for closing of line contactor.

Setting	Description
1...999 s	Setting range **Factory setting**: 5 s

Section 8.46
[Generic functions] - [Output contactor cmd]

[Output contactor cmd] oCC - Menu

Access

[Complete settings] ➡ **[Generic functions]** ➡ **[Output contactor cmd]**

About This Menu

This function allows the drive to control and/or monitor a contactor installed between the drive and the motor.

The control of the output contactor by the drive is activated by assigning **[Out. contactor Assign]** oCC. A request to close the contactor is done when a run command is activated. A request to open the contactor is done when no current is applied to the motor.

The monitoring of the output contactor by the drive is activated by assigning the feedback to **[Output contact. Fdbk]** rCA. In the event of an inconsistency, the drive triggers:

- **[Out Contact Opened Error]** FCF2 error, if the **[Output contact. Fdbk]** rCA is not closed before the end of **[Delay to motor run]** db5 or if the **[Output contact. Fdbk]** rCA opens if the motor is running.
- **[Out Contact Closed Error]** FCF1 error, if **[Output contact. Fdbk]** rCA is not opened before the end of **[Delay to open con.]** dA5 or if the **[Output contact. Fdbk]** rCA closes if the motor is stopped.

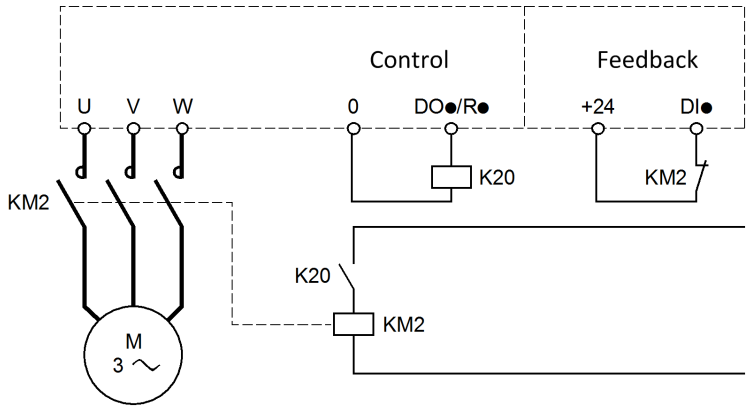

NOTE:

- **[Out Contact Opened Error]** FCF2 error can be cleared by a transition from 1 to 0 of the run command.
- **[Out. contactor Assign]** oCC and **[Output contact. fdbk]** rCA can be used individually.
- If the DC injection braking function is used, the output contactor does not close as long as DC injection braking is active

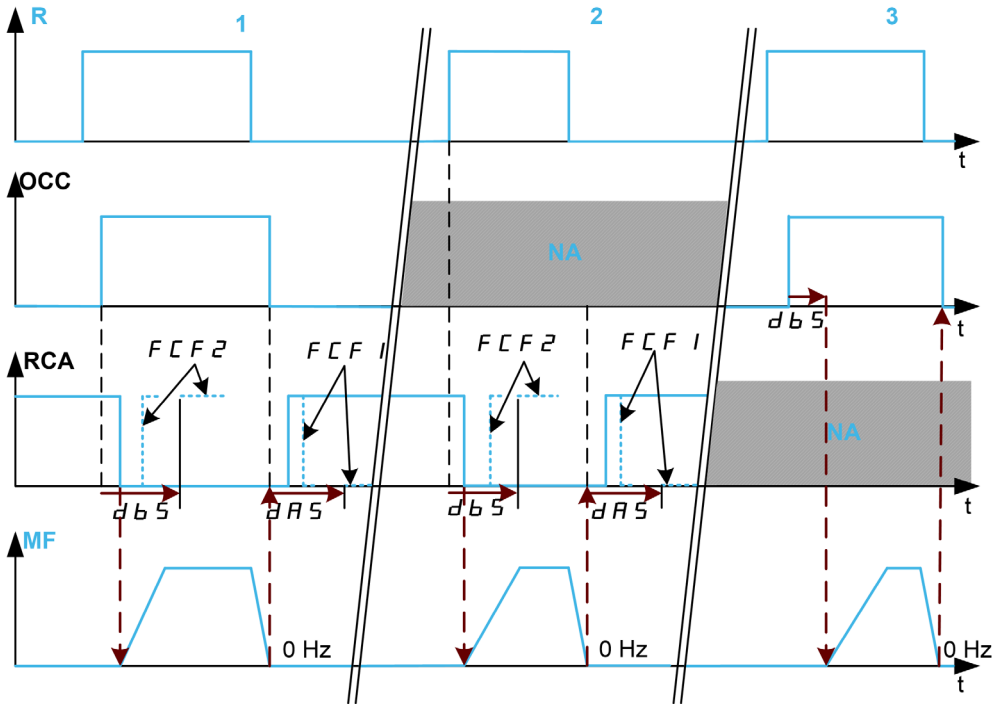

1 OCC and RCA assigned
2 RCA assigned
3 OCC assigned
t Time
R Run command
OCC Output contactor
RCA Output contactor feedback
NA Not Assigned
MF Motor frequency

[Out. Contactor Assign] oCC

Output contactor control.

Setting	Code / Value	Description
[No]	nO	Function not assigned. **Factory setting**
[R2]...**[R3]**	r2...r3	Relay output R2...R3
[R4]...**[R6]**	r4...r6	Relay output R2...R6 if VW3A3204 relay output option module has been inserted.
[DQ1 Digital Output]	dO1	Digital output DQ1.
[DQ1 Digital Output]...**[DQ1 Digital Output]**	dO11...dO22	Digital output DQ11...DQ12 if VW3A3203 I/O extension module has been inserted.
[R61]...**[R66]**	r61...r66	Relay R61 …R66 **NOTE:** This selection can be accessed on ATV960, ATV980 equipped with Cabinet IO.

[Output contact fdbk] rCA

Output contactor fbdk.

The motor starts to run when the assigned digital input or bit switches to 0.

Setting	Code / Value	Description
[Not Assigned]	nO	Not assigned **Factory setting**
[DI1 (Low level)]...**[DI6 (Low level)]**	LIL ...LbL	Digital input DI1...DI6 used at low level
[DI11]...**[DI16]**	L11...L16	Digital input DI11...DI16 if VW3A3203 I/O extension module has been inserted
[C101]...**[C110]**	C101...C110	Virtual digital input CMD1.01...CMD1.10 with integrated Modbus Serial in **[I/O profile]** IO configuration
[C111]...**[C115]**	C111...C115	Virtual digital input CMD1.11...CMD1.15 with integrated Modbus Serial regardless of configuration
[C201]...**[C210]**	C201...C210	Virtual digital input CMD2.01...CMD2.10 with CANopen® fieldbus module in **[I/O profile]** IO configuration
[C211]...**[C215]**	C211...C215	Virtual digital input CMD2.11...CMD2.15 with CANopen® fieldbus module regardless of configuration
[C301]...**[C310]**	C301...C310	Virtual digital input CMD3.01...CMD3.10 with a fieldbus module in **[I/O profile]** IO configuration
[C311]...**[C315]**	C311...C315	Virtual digital input CMD3.11...CMD3.15 with a fieldbus module regardless of configuration
[C501]...**[C510]**	C501...C510	Virtual digital input CMD5.01...CMD5.10 with integrated Ethernet Modbus TCP in **[I/O profile]** IO configuration
[C511]...**[C515]**	C511...C515	Virtual digital input CMD5.11...CMD5.15 with integrated Ethernet Modbus TCP regardless of configuration

[Delay to motor run] db5

Delay to close o/p cont.

This parameter delays:

- Motor control following the sending of a run command when the drive only monitors the output contactor.
- The **[Out Contact Opened Error]** FCF2 error monitoring if the **[Output contact fdbk]** rCA is assigned.

The time delay must be greater than the closing time of the output contactor.

This parameter can be accessed if **[Out. contactor Assign]** oCC or **[Output contact fdbk]** rCA is assigned.

Setting	Description
0.05...60.00 s	Setting range **Factory setting**: 0.15 s

[Delay to open con.] dA5

Delay to open contactor

This delay must be greater than the opening time of the output contactor.

If the value of digital input assigned to the **[Output contact fdbk]** rCA is not 0 at the end of this delay, **[Out Contact Closed Error]** FCF1 error is triggered. If this parameter is set to 0, the **[Out Contact Closed Error]** FCF1 error is not monitored.

This parameter can be accessed if **[Output contact fdbk]** rCA is assigned.

Setting	Description
0.00...5.00 s	Setting range **Factory setting**: 0.10 s

Section 8.47
[Generic functions] - [Reverse disable]

[Reverse disable] rE in - Menu

Access

[Complete settings] ➡ **[Generic functions]** ➡ **[Reverse disable]**

[Reverse Disable] r in

Reverse direction disable.

NOTE: Anti-Jam function takes priority over **[Reverse Disable]** r in function. If an Anti-Jam function is used, reverse direction is applied despite of the **[Reverse disable]** r in configuration.

Reverse direction requests sent by digital inputs are taken into account.

Reverse direction requests sent by the Graphic Display Terminal or sent by the line are not taken into account.

Any reverse speed reference originating from the PID, summing input, and so on, is interpreted as a zero reference (0 Hz).

Setting	Code / Value	Description
[No]	no	No
[Yes]	YES	Yes **Factory setting**

Section 8.48
[Generic functions] - [Torque limitation]

[Torque limitation] tOL - Menu

Access

[Complete settings] → [Generic functions] → [Torque limitation]

About This Menu

The value of the torque limitation is fixed by a parameter.

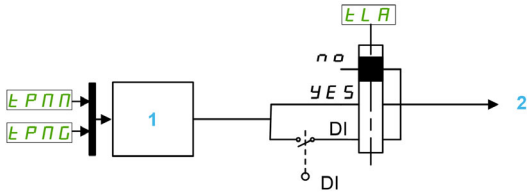

1 Torque limitation via parameter in power
2 Limitation Value

[Torque limit activ.] tLA

Activation of the permanent torque limitation.

If the assigned input or bit is at 0, the function is inactive.

If the assigned input or bit is at 1, the function is active.

Setting	Code / Value	Description
[Not Assigned]	nO	Not assigned **Factory setting**
[Yes]	YES	Yes
[DI1]...**[DI6]**	LI1...LI6	Digital input DI1...DI6
[DI11]...**[DI16]**	LI11...LI16	Digital input DI11...DI16 if VW3A3203 I/O extension module has been inserted
[CD00]...**[CD10]**	CD00...CD10	Virtual digital input CMD.0...CMD.10 in **[I/O profile]** IO configuration
[CD11]...**[CD15]**	CD11...CD15	Virtual digital input CMD.11...CMD.15 regardless of configuration
[C101]...**[C110]**	C101...C110	Virtual digital input CMD1.01...CMD1.10 with integrated Modbus Serial in **[I/O profile]** IO configuration
[C111]...**[C115]**	C111...C115	Virtual digital input CMD1.11...CMD1.15 with integrated Modbus Serial regardless of configuration
[C201]...**[C210]**	C201...C210	Virtual digital input CMD2.01...CMD2.10 with CANopen® fieldbus module in **[I/O profile]** IO configuration
[C211]...**[C215]**	C211...C215	Virtual digital input CMD2.11...CMD2.15 with CANopen® fieldbus module regardless of configuration
[C301]...**[C310]**	C301...C310	Virtual digital input CMD3.01...CMD3.10 with a fieldbus module in **[I/O profile]** IO configuration
[C311]...**[C315]**	C311...C315	Virtual digital input CMD3.11...CMD3.15 with a fieldbus module regardless of configuration
[C501]...**[C510]**	C501...C510	Virtual digital input CMD5.01...CMD5.10 with integrated Ethernet Modbus TCP in **[I/O profile]** IO configuration
[C511]...**[C515]**	C511...C515	Virtual digital input CMD5.11...CMD5.15 with integrated Ethernet Modbus TCP regardless of configuration

[Pmax Motor] tPMM ★

Maximum power in motor mode.

This parameter can be accessed if **[Torque limit activ.]** tLA is not set to **[Not Assigned]** no.

Setting ❮❯	Description
10...300%	Setting range **Factory setting**: 300%

[Pmax Generator] tPMG ★

Maximum acceptable power in generator mode.

This parameter can be accessed if **[Torque limit activ.]** tLA is not set to **[Not Assigned]** no.

Setting ❮❯	Description
10...300%	Setting range **Factory setting**: 300%

Section 8.49
[Generic functions] - [Parameters switching]

What Is in This Section?

This section contains the following topics:

Topic	Page
[Parameters switching] *ΠLP* - Menu	450
[Set 1] *PS1* - Menu	456
[Set 2] *PS2* - Menu	456
[Set 3] *PS3* - Menu	456

[Parameters switching] MLP - Menu

Access

[Complete settings] ➡ **[Generic functions]** ➡ **[Parameters switching]**

About This Menu

A set of 1 to 15 parameters from the **[Parameter Selection]** SPS list *(see page 451)* can be selected and 2 or 3 different values assigned. These 2 or 3 sets of values can then be switched using 1 or 2 digital inputs or control word bits. This switching can be performed during operation (motor running). It can also be controlled based on 1 or 2 frequency thresholds, whereby each threshold acts as a digital input (0 = threshold not reached, 1 = threshold reached).

	Values 1	Values 2	Values 3
Parameter 1 ... Parameter 15	Parameter 1 ... Parameter 15	Parameter 1 ... Parameter 15	Parameter 1 ... Parameter 15
Input DI or bit or frequency threshold 2 values	0	1	0 or 1
Input DI or bit or frequency threshold 3 values	0	0	1

NOTE: Do not modify the parameters in **[Parameter Selection]** SPS *(see page 451)*, because any modifications made in this menu will be lost on the next power-up. The parameters can be adjusted during operation in the **[Parameters switching]** MLP - menu, on the active configuration.

[2 Parameter sets] CHA1

Parameter switching assignment 1.

Switching 2 parameter sets.

Setting	Code / Value	Description
[Not Assigned]	nO	Not assigned **Factory setting**
[Mot Freq High Thd]	FtA	Motor frequency high threshold reached
[2nd Freq Thd Reached]	F2A	Second frequency threshold reached
[DI1]...**[DI6]**	LI1...LI6	Digital input DI1...DI6
[DI11]...**[DI16]**	LI11...LI16	Digital input DI11...DI16 if VW3A3203 I/O extension module has been inserted
[CD00]...**[CD10]**	Cd00...Cd10	Virtual digital input CMD.0...CMD.10 in **[I/O profile]** IO configuration
[CD11]...**[CD15]**	Cd11...Cd15	Virtual digital input CMD.11...CMD.15 regardless of configuration
[C101]...**[C110]**	C101...C110	Virtual digital input CMD1.01...CMD1.10 with integrated Modbus Serial in **[I/O profile]** IO configuration
[C111]...**[C115]**	C111...C115	Virtual digital input CMD1.11...CMD1.15 with integrated Modbus Serial regardless of configuration
[C201]...**[C210]**	C201...C210	Virtual digital input CMD2.01...CMD2.10 with CANopen® fieldbus module in **[I/O profile]** IO configuration
[C211]...**[C215]**	C211...C215	Virtual digital input CMD2.11...CMD2.15 with CANopen® fieldbus module regardless of configuration
[C301]...**[C310]**	C301...C310	Virtual digital input CMD3.01...CMD3.10 with a fieldbus module in **[I/O profile]** IO configuration
[C311]...**[C315]**	C311...C315	Virtual digital input CMD3.11...CMD3.15 with a fieldbus module regardless of configuration
[C501]...**[C510]**	C501...C510	Virtual digital input CMD5.01...CMD5.10 with integrated Ethernet in **[I/O profile]** IO configuration
[C511]...**[C515]**	C511...C515	Virtual digital input CMD5.11...CMD5.15 with integrated Ethernet regardless of configuration

[3 Parameter sets] CHA2

Parameter switching assignment 2.

Identical to **[2 Parameter sets]** CHA 1.

Switching 3 parameter sets.

NOTE: In order to obtain 3 parameter sets, it is necessary to configure first **[2 Parameter sets]** CHA 1.

[Parameter Selection] SPS

This parameter can be accessed if **[2 Parameter sets]** CHA 1 is not set to **[No]** no.

Making an entry in this parameter opens a window containing all the adjustment parameters that can be accessed. Select 1 to 15 parameters using **OK** key. Parameter(s) can also be deselected using **OK** key.

Available parameters for parameters switching function are:

Parameter	Code
[Ramp increment]	inr
[Acceleration]	ACC
[Deceleration]	dEC
[Acceleration 2]	AC2
[Deceleration 2]	dE2
[Begin Acc round]	tA1
[End Acc round]	tA2
[Begin Dec round]	tA3
[End Dec round]	tA4
[Low Speed]	LSP
[High Speed]	HSP
[Motor Th Current]	ItH
[IR compensation]	UFr
[Slip compensation]	SLP
[K speed loop filter]	SFC
[Speed time integral]	S It
[Speed prop. gain]	SPG
[Inertia Factor]	SPGU
[Ramp Divider]	dCF
[DC Inj Level 1]	IdC
[DC Inj Time 1]	tdI
[DC Inj Level 2]	IdC2
[DC Inj Time 2]	tdC
[Auto DC inj Level 1]	SdC1
[Auto DC Inj Time 1]	tdC1
[Auto DC inj Level 2]	SdC2
[Auto DC Inj Time 2]	tdC2
[Switching frequency]	SFr
[Current Limitation]	CLI
[Low Speed Timeout]	tLS
[Sleep Offset Thres.]	SLE
[Preset speed 2]...[Preset speed 16]	SP2... SP16
[Multiplying coeff.]	MFr
[PID Prop.Gain]	rPG
[PID Intgl.Gain]	rIG
[PID derivative gain]	rdG

Parameter	Code
[PID ramp]	PrP
[PID Min Output]	PoL
[PID Max Output]	PoH
[PID Start Ref Freq]	SFS
[PID acceleration time]	ACCP
[Min fbk Warning]	PAL
[Max fbk Warning]	PAH
[PID error Warning]	PEr
[Speed input %]	PSr
[Ref PID Preset 2]	rP2
[Ref PID Preset 3]	rP3
[Ref PID Preset 4]	rP4
[PID Fdbk Range]	PFMr
[PID Fdbk Error Delay]	PFMd
[High Current Thd]	Ctd
[Low I Threshold]	CtdL
[High torque thd.]	ttH
[Low torque thd.]	ttL
[Motor Freq Thd]	Ftd
[Low Freq.Threshold]	FtdL
[Freq. threshold 2]	F2d
[2 Freq. Threshold]	F2dL
[Freewheel stop Thd]	FFt
[Motor Therm Thd]	ttd
[Reference high Thd]	rtd
[Reference low Thd]	rtdL
[Skip Frequency]	JPF
[Skip Frequency 2]	JF2
[3rd Skip Frequency]	JF3
[Skip Freq.Hysteresis]	JFH
[Unld.Thr.Nom.Speed]	Lun
[Unld.Thr.0.Speed]	LuL
[Unld. FreqThr. Det.]	rMud
[Hysteresis Freq]	Srb
[Underload T.B.Rest.]	Ftu
[Ovld Detection Thr.]	LoC
[Overload T.B.Rest.]	Fto
[Fan mode]	FFM
[Pmax Motor]	tPMM
[Pmax Generator]	tPMG
[Stall Max Time]	StP1
[Stall Current]	StP2
[Stall Frequency]	StP3
[AI2 Th Warn Level]	tH2A
[AI5 Th Warn Level]	tH5A
[AI2 Th Error Level]	tH2F
[AI5 Th Error Level]	tH5F

Parameter	Code
[Start Accel Ramp]	ACC5
[Dec. Check Valve]	dECu
[Check Valve Speed 2]	CuH5
[Check Valve Speed 1]	CuL5
[Final Dec. Ramp]	dEC5
[Sleep Flow Level]	SLnL
[Sleep Min Speed]	SL5L
[Sleep Power Level]	SLPr
[Sleep Pressure Level]	SLPL
[Sleep Delay]	SLPd
[SLeep Boost Speed]	SLb5
[Sleep Boost Time]	SLbt
[Wake Up Process level]	WuPF
[Wake Up Process Error]	WuPE
[Wake Up Press level]	WuPL
[Sleep Condition]	ASLC
[Sleep Check Delay]	ASLd
[Check Sleep Ref spd]	ASLr
[Flow Lim Thd Active]	CHt
[FlowLim Thd Disable]	rCHt
[Flow. Limit Dec.]	dFL
[Pipe Fill TiMe]	PFHt
[Pipe Fill SPeed]	PFH5
[Pipe Fill Pressure]	PFHP
[Priming Time]	PP5d
[Primed Inlet Level]	PPiL
[Primed Condition Delay]	PPFd
[Minimum Pressure]	JPrP
[Delay to start]	JPrd
[Maximum Pressure]	JP5P
[Reference Speed]	JPr5
[Wake up Delay]	JPWd
[Alpha]	FLdA
[Comp. at Point 1]	FLH1
[Flow at Point 1]	FL91
[Static Compensation]	FLH0
[OutPres Min Level]	oPPL
[OutPres Max Level]	oPPH
[OutPresError Delay]	oPPd
[HighFlow MaxLevel]	HFPL
[HighFlowError Delay]	HFPd
[PumpCycle MaxStarts]	PCPn
[PumpCycle Timeframe]	PCPt
[InletPres High Thd]	iPPH
[InletPres Low Thd]	iPPL
[InletPres Max Comp]	iPPC

Parameter	Code
[Anti-Jam Trigger Time]	JtCt
[Anti-Jam Torque]	JtCL
[Anti-Jam Start Delay]	JtCd
[Anti-Jam Fwd Dec]	JdEC
[Anti-Jam Rv Dec]	JdEr
[Anti-Jam Fwd Acc]	JACC
[Anti-Jam Rv Acc]	JACr
[Anti-Jam Fwd Time]	JFdt
[Anti-Jam Rv Time]	Jrut
[Anti-Jam Fwd Speed]	JFdS
[Anti-Jam Rv Speed]	JruS
[Anti-Jam Stop Time]	JZSt
[Anti-Jam Cycle Nb]	JnbC
[Anti-Jam Max Seq]	JAMn
[Anti-Jam Interval]	JAMt
[DryRun Error Delay]	drYd
[DryRun Restart Delay]	drYr
[Dry Run Factor]	drYX
[PumpLF Min Level]	PLFL
[PumpLF Power Factor]	PLFX
[PumpLF ActivDelay]	PLFA
[PumpLF Error Delay]	PLFd
[PumpLF Restart Delay]	PLFr
[LevelCtrl Random Factor]	LCrX
[Level 1st Pump Start]	LrL 1
[Level 2nd Pump Start]	LrL2
[Level 3rd Pump Start]	LrL3
[Level 4th Pump Start]	LrL4
[Level 5th Pump Start]	LrL5
[Level 6th Pump Start]	LrL6
[Level 1st Pump Stop]	LPL 1
[Level 2nd Pump Stop]	LPL2
[Level 3rd Pump Stop]	LPL3
[Level 4th Pump Stop]	LPL4
[Level 5th Pump Stop]	LPL5
[Level 6th Pump Stop]	LPL6
[Level 1st Pump at HSP]	LHL 1
[Level 2nd Pump at HSP]	LHL2
[Level 3rd Pump at HSP]	LHL3
[Level 4th Pump at HSP]	LHL4
[Level 5th Pump at HSP]	LHL5
[Level 6th Pump at HSP]	LHL6
[LevelCtrl Low Speed]	LCL5
[Min Delivery Height]	LCdJ
[Max Delivery Height]	LCdK
[LevelCtrl S/D Interval]	LCdt
[Booster Stg Speed]	b55

Parameter	Code
[Booster Dstg Speed]	bdS
[Booster Stg Delay]	bSd
[Booster Stg Bypass Speed]	bSbS
[Booster Stg Ramp Delay]	bSrd
[Booster Stg Bypass Time]	bSbt
[Booster Dstg Delay]	bdd
[Booster Dstg Bypass Spd]	bdbS
[Booster Dstg Ramp Delay]	bdrd
[Booster Dstg Bypass Time]	bdbt
[Booster S/D Interval]	bSdt
[Booster Working Range]	bCWA
[Booster Override Range]	bCoA
[Booster S/D Flow Hyst]	bSdH
[Booster Dstg Flow]	bdF
[FeedFwd Stage Delay]	FFSd
[FeedFwd Destage Delay]	FFdd
[FeedFwd Disturb Gain]	FFG
[FeedFwd Disturb Time]	FFtG
[AFE Generator Mode]	CL iG
[Pump Fixed Freq]	nPFS
[Pump Op Point Filter]	WPXF

[Set 1] P S 1 - Menu

Access

[Complete settings] ➡ [Generic functions] ➡ [Parameters switching] ➡ [Set 1]

About This Menu

Making an entry in this menu opens a settings window containing the selected parameters in the order in which they were selected.

[Set 2] P S 2 - Menu

Access

[Complete settings] ➡ [Generic functions] ➡ [Parameters switching] ➡ [Set 2]

About This Menu

Identical to **[Set 1]** P S 1 - *(see page 456)*.

[Set 3] P S 3 - Menu

Access

[Complete settings] ➡ [Generic functions] ➡ [Parameters switching] ➡ [Set 3]

About This Menu

Identical to **[Set 1]** P S 1 - *(see page 456)*.

Section 8.50
[Generic functions] - [Stop after speed timeout]

[Stop after speed timeout] PrSP - Menu

Access

[Complete settings] → **[Generic functions]** → **[Stop after speed timeout]**

Sleep/Wake-Up in Speed Control Mode

The drive is in Speed control mode, when PID is not active, typically when:
- PID is not configured (the motor speed setpoint is controlled by an external PLC, for example).
- PID is in manual mode (manual application mode, for example).
- PID is not active because Channel 1 is not selected (forced local mode enabled, for example).

When the drive is used in Speed Control (PID not used or not active), a speed condition is used to switch the application to the sleep state. When the drive is in sleep state, the motor is restarted if the sleep condition disappears.

This function avoids prolonged operation at low speeds when neither useful nor compliant with the system constraints. It stops the motor after a period of operation at reduced speed. This time and speed can be adjusted.

In Speed control mode, Sleep/Wake-up is managed according to the following rules:
- The motor is stopped when **[Pre-Ramp Ref Freq]** FrH and **[Output frequency]** rFr become and stay lower than **[Low speed]** LSP + **[Sleep Offset Thres.]** SLE during **[Low Speed Timeout]** tLS.
- The motor is restarted when **[Pre-Ramp Ref Freq]** FrH > **[Low speed]** LSP + **[Sleep Offset Thres.]** SLE.

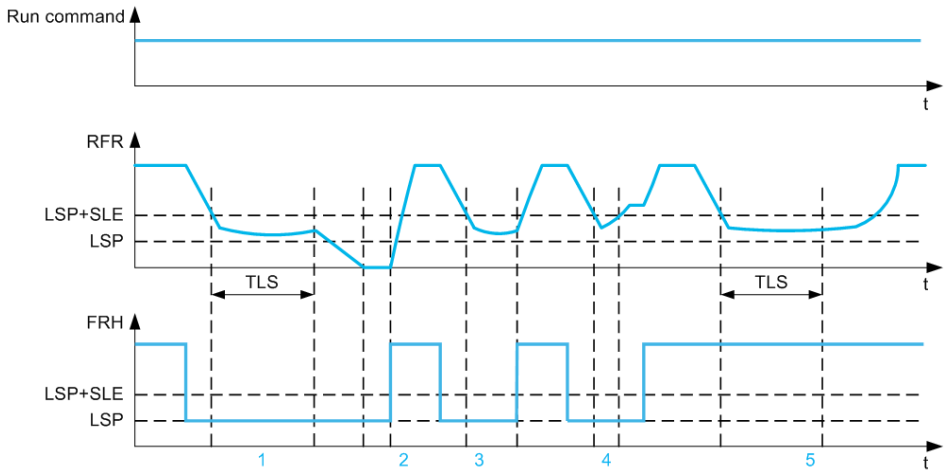

1 Nominal **[Low Speed Timeout]** tLS function action: after **[Low Speed Timeout]** tLS time, the motor is stopped according to the current deceleration ramp

2 **[Pre-Ramp Ref Freq]** FrH becomes greater than **[Low speed]** LSP + **[Sleep Offset Thres.]** SLE and run order still present **[Low Speed Timeout]** tLS function is deactivated

3 **[Low Speed Timeout]** tLS function is not activated because **[Pre-Ramp Ref Freq]** FrH becomes greater than **[Low speed]** LSP + **[Sleep Offset Thres.]** SLE before **[Low Speed Timeout]** tLS has expired

4 **[Low Speed Timeout]** tLS function is not activated because **[Output frequency]** rFr becomes greater than **[Low speed]** LSP + **[Sleep Offset Thres.]** SLE before **[Low Speed Timeout]** tLS has expired

5 **[Low Speed Timeout]** tLS function is not activated because **[Pre-Ramp Ref Freq]** FrH stays greater than **[Low speed]** LSP + **[Sleep Offset Thres.]** SLE

[Low Speed Timeout] tLS

Low speed timeout

Setting	Description
0.0...999.9 s	Setting range **Factory setting**: 0.0 s

[Sleep Offset Thres.] SLE ★

Sleep offset threshold.

This parameter can be accessed if **[Low Speed Timeout]** tLS is not set to 0.

Adjustable restart threshold (offset) following a stop after prolonged operation at **[Low speed]** LSP + **[Sleep Offset Thres.]** SLE, in Hz. The motor restarts if the reference rises above (LSP + SLE) and if a run command is still present.

Setting	Description
1.0...**[Max Frequency]** tFr	Setting range **Factory setting**: 1.0 Hz

Section 8.51
[Generic functions] - [Active Front End]

[Active Front End] AFE - Menu

Access

[Complete settings] ➡ **[Generic functions]** ➡ **[Active Front End]**

About This Menu

This menu is used to set the current limitation for active front end used in generator mode.

If the active front end is running in motor mode, a warning **[AFE Motor Limitation]** CL1M is triggered if the current limitation of 120% is reached, a warning **[AFE Regen Limitation]** CL1G is triggered when the limitation set with parameter **[AFE Generator Mode]** CL1G is reached.

NOTE: This menu can be accessed on ATV680 and ATV6B0.

[AFE Generator Mode] CL1G ★

AFE Generator Mode

This parameter sets the current limitation in generator operation mode. If the parameter is set to **[Low Harmonic]** LHM the drive will operate in Low Harmonic but not regenerate energy to the mains.

Setting	Code / Value	Description
[Low Harmonic]	LHM	Low Harmonic mode (current to the mains less than 10%). **Factory setting**
[Low Harmonic & Regen]	LHrM	Low Harmonic and Regeneration mode (120%).
0.0...120.0 %		Current limitation in generator mode (for specific setting).

Section 8.52
[Generic monitoring]

What Is in This Section?

This section contains the following topics:

Topic	Page
[Process underload] uLd - Menu	461
[Process overload] oLd - Menu	463
[Stall monitoring] StPr - Menu	465
[Thermal monitoring] tPP - Menu	466

[Process underload] uLd - Menu

Access

[Complete settings] ➜ **[Generic monitoring]** ➜ **[Process underload]**

Process Underload Detected Error

A process underload is detected when the next event occurs and remains pending for a minimum time **[Unld T. Del. Detect]** uLt, which is configurable:

- The motor is in steady state and the torque is below the set underload limit (**[Unld.Thr.0.Speed]** LuL, **[Unld.Thr.Nom.Speed]** Lun, **[Unld. FreqThr. Det.]** rMud parameters).
- The motor is in steady state when the offset between the frequency reference and motor frequency falls below the configurable threshold **[Hysteresis Freq]** Srb.

Between zero frequency and the rated frequency, the curve reflects the following equation: torque = LuL + (Lun - LuL) x (frequency)^2 / (rated frequency)^{2}The underload function is not active for frequencies below rMud.

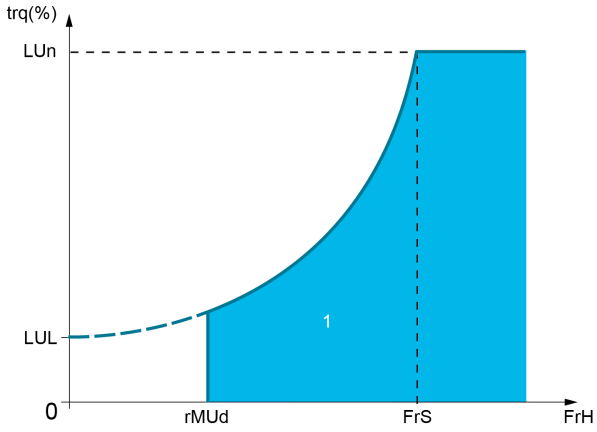

1 Underload zone.

A relay or a digital output can be assigned to the signaling of this detected error in the **[Input/Output]** IO - , **[I/O assignment]** IOAS - menus.

[Unld T. Del. Detect] uLt

Underload detection time delay.

A value of 0 deactivates the function and makes the other parameters inaccessible.

Setting	Description
0...100 s	Setting range **Factory setting**: 0 s

[Unld.Thr.Nom.Speed] Lun ★

Underload threshold at nominal motor speed **[Nominal Motor Freq]** Fr S, as a % of the rated motor torque.

This parameter can be accessed if **[Unld T. Del. Detect]** uLt is not set to 0.

Setting	Description
20...100%	Setting range **Factory setting**: 60%

[Unld.Thr.0.Speed] uL1 ★

Underload threshold at zero frequency as a % of the rated motor torque.

This parameter can be accessed if **[Unld T. Del. Detect]** uLt is not set to 0.

Setting ❮❯	Description
0...**[Unld.Thr.Nom.Speed]** uLn	Setting range **Factory setting**: 0%

[Unld. FreqThr. Det.] rMud ★

Minimum frequency underload detection threshold.

This parameter can be accessed if **[Unld T. Del. Detect]** uLt is not set to 0.

Setting ❮❯	Description
0.0...500.0 Hz	Setting range **Factory setting**: 0.0 Hz

[Hysteresis Freq] Srb ★

Maximum deviation between the frequency reference and the motor frequency, which defines a steady state operation.

This parameter can be accessed if **[Unld T. Del. Detect]** uLt or **[Ovld Time Detect.]** toL is not set to 0.

Setting ❮❯	Description
0.3...500.0 Hz	Setting range **Factory setting**: 0.3 Hz

[Underload Mangmt.] udL ★

Underload management.

Behavior on switching to underload detection.

This parameter can be accessed if **[Unld T. Del. Detect]** uLt is not set to 0.

Setting	Code / Value	Description
[Ignore]	no	Detected error ignored
[Freewheel stop]	YES	Freewheel stop **Factory setting**
[Ramp stop]	rMP	Stop on ramp
[Fast stop]	FSt	Fast stop

[Underload T.B.Rest.] Ftu ★

Minimum time permitted between an underload being detected and any automatic restart.

To allow an automatic restart, the value of **[Fault Reset Time]** tAr must exceed this parameter by at least 1 minute.

This parameter can be accessed if **[Underload Mangmt.]** udL is not set to **[Ignore]** no.

Setting ❮❯	Description
0...6 min	Setting range **Factory setting**: 0 min

[Process overload] oLd - Menu

Access

[Complete settings] ➡ [Generic monitoring] ➡ [Process overload]

About This Menu

A process overload error is detected when the next event occurs and remains pending for a minimum time **[Ovld Time Detect.]** tOL, which is configurable:

- The drive is in **[Current limitation]** CLI mode during acceleration, deceleration, or,
- The motor is in steady state and the **[Motor Current]** LCr is above the set overload threshold **[Ovld Detection Thr.]** LoC.

The motor is in steady state when the offset difference between **[Pre-Ramp Ref Freq]** FrH and **[Motor Frequency]** rFr is less than the configurable threshold **[Hysteresis Freq]** Srb.

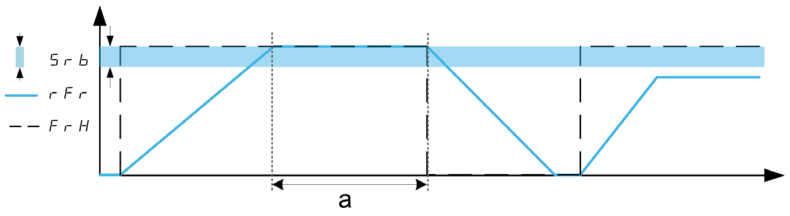

NOTE: Process overload monitoring is always active in **[Current limitation]** CLI state.

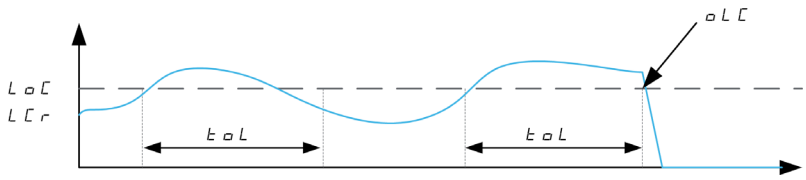

[Ovld Time Detect.] tOL

Overload reaction time.

A value of 0 deactivates the function and makes the other parameters inaccessible.

Setting	Description
0...100 s	Setting range **Factory setting**: 0 s

[Ovld Detection Thr.] LoC ★

Overload threshold.

Overload detection threshold, as a % of the rated motor current **[Nom Motor Current]** nCr. This value must be less than the limit current in order for the function to work.

This parameter can be accessed if **[Ovld Time Detect.]** tOL is not set to 0.

Setting ❮❯	Description
70...150%	Setting range **Factory setting**: 110%

[Hysteresis Freq] SrbStar

Hysteresis for steady state.

Maximum deviation between the frequency reference and the motor frequency, which defines a steady state operation.

This parameter can be accessed if **[Ovld Time Detect.]** tOL or **[Unld T. Del. Detect.]** uLt is not set to 0.

Setting	Description
0.3...500.0 Hz	Setting range **Factory setting**: 0.3 Hz

[Ovld.Proces.Mngmt] odLStar

Behavior on switching to overload detection.

This parameter can be accessed if **[Ovld Time Detect.]** tOL is not set to 0.

Setting	Code / Value	Description
[Ignore]	nO	Detected error ignored
[Freewheel stop]	YES	Freewheel stop **Factory setting**
[Ramp stop]	rMP	Stop on ramp
[Fast stop]	FSt	Fast stop

[Overload T.B.Rest.] FtOStar

Minimum time permitted between an overload being detected and any automatic restart.

In order to allow an automatic restart, the value of **[Fault Reset Time]** tAr must exceed this parameter by at least 1 minute.

This parameter can be accessed if **[Ovld Time Detect.]** tOL or **[Ovld.Process.Mngmt]** odL is not set to 0.

Setting	Description
0...6 min	Setting range **Factory setting**: 0 min

[Stall monitoring] StPr - Menu

Access

[Complete settings] ➞ [Generic monitoring] ➞ [Stall monitoring]

About This Menu

This function helps to prevent a motor overload by monitoring the motor current and the speed rise time.

A stalling condition is when:

- An output frequency is smaller than the stalling frequency **[Stall Frequency]** StP3
- And an output current is higher than the stalling current **[Stall Current]** StP2
- During a time longer than the stalling time **[Stall Max Time]** StP1

When a stalling condition occurs, a **[Motor Stall Error]** StF error is triggered.

[Stall Monitoring] StPC

Stall monitoring activation.

Setting	Code / Value	Description
[No]	no	Function disabled **Factory setting**
[Yes]	YES	Function enabled

[Stall Max Time] StP1 ★

Motor stall maximum time.

This parameter can be accessed if **[Stall Monitoring]** StPC is not set to **[No]** no.

Setting	Description
0.0...200 s	Setting range **Factory setting**: 60.0 s

[Stall Current] StP2 ★

Stall monitoring current level, as a % of the rated motor current **[Nom Motor Current]** nCr.

This parameter can be accessed if **[Stall Monitoring]** StPC is not set to **[No]** no.

The factory setting changes to 150,0 % if **[Dual rating]** drt is set to **[Heavy Duty]** HIGh.

Setting	Description
0.0...150.0%	Setting range **Factory setting**: 150.0%

[Stall Frequency] StP3 ★

Stall monitoring frequency level.

This parameter can be accessed if **[Stall Monitoring]** StPC is not set to **[No]** no.

Setting	Description
0.0...**[Max Frequency]** tFr	Setting range **Factory setting**: 2.0 Hz

[Thermal monitoring] tPP - Menu

Access

[Complete settings] ➡ [Generic monitoring] ➡ [Thermal monitoring]

About This Menu

Identical to **[Thermal monitoring] tPP -** Menu *(see page 188)*.

Section 8.53
[Input/Output] - [I/O assignment]

What Is in This Section?

This section contains the following topics:

Topic	Page
[DI1 assignment] L I1A - Menu	468
[DI2 assignment] L I2A - Menu	468
[DI3 assignment] L I3A - Menu	468
[DI4 assignment] L I4A - Menu	469
[DI5 assignment] L I5A - Menu	469
[DI6 assignment] L I6A - Menu	469
[DI11 assignment] L I11A - Menu	470
[DI12 assignment] L I12A - Menu	470
[DI13 assignment] L I13A - Menu	470
[DI14 assignment] L I14A - Menu	471
[DI15 assignment] L I15A - Menu	471
[DI16 assignment] L I16A - Menu	471
[DI5 Pulse Input Assign] P I5A - Menu	472
[DI6 Pulse Input Assign] P I6A - Menu	472
[AI1 assignment] AI1A - Menu	472
[AI2 assignment] AI2A - Menu	472
[AI3 assignment] AI3A - Menu	473
[AI4 assignment] AI4A - Menu	473
[AI5 assignment] AI5A - Menu	473
[AIV1 assignment] AV1A - Menu	474
[AIV2 assignment] AV2A - Menu	474
[AIV3 assignment] AV3A - Menu	474
[DI50 Assignment] dS0A - Menu	475
[DI51 Assignment] dS1A - Menu	475
[DI52 Assignment] dS2A - Menu	476
[DI53 Assignment] dS3A - Menu	477
[DI54 Assignment] dS4A - Menu	477
[DI55 Assignment] dS5A - Menu	477
[DI56 Assignment] dS6A - Menu	478
[DI57 Assignment] dS7A - Menu	478
[DI58 Assignment] dS8A - Menu	478
[DI59 Assignment] dS9A - Menu	479

[DI1 assignment] L I A - Menu

Access

[Complete settings] ➞ [Input/Output] ➞ [I/O assignment] ➞ [DI1 assignment]

[DI1 Low Assignment] L I L

DI1 low assignment.

Read-only parameter, cannot be configured. It displays all the functions associated with digital input DI1 in order to verify, for example, for compatibility problems.

If no functions have been assigned, **[No]** n o is displayed.

[DI1 High Assignment] L I H

DI1 high assignment.

Read-only parameter, cannot be configured. It displays all the functions associated with digital input DI1 in order to verify, for example, for compatibility problems.

If no functions have been assigned, **[No]** n o is displayed.

[DI2 assignment] L 2 A - Menu

Access

[Complete settings] ➞ [Input/Output] ➞ [I/O assignment] ➞ [DI2 assignment]

About This Menu

Identical to **[DI1 assignment]** L I A - menu *(see page 468)*.

[DI2 Low Assignment] L 2 L

DI2 low assignment.

[DI2 High Assignment] L 2 H

DI2 high assignment.

[DI3 assignment] L 3 A - Menu

Access

[Complete settings] ➞ [Input/Output] ➞ [I/O assignment] ➞ [DI3 assignment]

About This Menu

Identical to **[DI1 assignment]** L I A - menu *(see page 468)*.

[DI3 Low Assignment] L 3 L

DI3 low assignment.

[DI3 High Assignment] L 3 H

DI3 high assignment.

[DI4 assignment] L 4 A - Menu

Access

[Complete settings] ➞ [Input/Output] ➞ [I/O assignment] ➞ [DI4 assignment]

About This Menu

Identical to **[DI1 assignment] L 1 A -** menu *(see page 468)*.

[DI4 Low Assignment] L 4 L

DI4 low assignment.

[DI4 High Assignment] L 4 H

DI4 high assignment.

[DI5 assignment] L 5 A - Menu

Access

[Complete settings] ➞ [Input/Output] ➞ [I/O assignment] ➞ [DI5 assignment]

About This Menu

Identical to **[DI1 assignment] L 1 A -** menu *(see page 468)*.

[DI5 Low Assignment] L 5 L

DI5 low assignment.

[DI5 High Assignment] L 5 H

DI5 high assignment.

[DI6 assignment] L 6 A - Menu

Access

[Complete settings] ➞ [Input/Output] ➞ [I/O assignment] ➞ [DI6 assignment]

About This Menu

Identical to **[DI1 assignment] L 1 A -** menu *(see page 468)*.

[DI6 Low Assignment] L 6 L

DI6 low assignment.

[DI6 High Assignment] L 6 H

DI6 high assignment.

[DI11 assignment] L I1A - Menu

Access

[Complete settings] ➞ [Input/Output] ➞ [I/O assignment] ➞ [DI11 assignment]

About This Menu

Identical to **[DI1 assignment] L I1A -** menu *(see page 468)*.

Following parameters can be accessed if VW3A3203 I/O extension module has been inserted.

[DI11 Low Assignment] L I1L ★

DI11 low assignment.

[DI11 High Assignment] L I1H ★

DI11 high assignment.

[DI12 assignment] L I2A - Menu

Access

[Complete settings] ➞ [Input/Output] ➞ [I/O assignment] ➞ [DI12 assignment]

About This Menu

Identical to **[DI1 assignment] L I1A -** menu *(see page 468)*.

Following parameters can be accessed if VW3A3203 I/O extension module has been inserted.

[DI12 Low Assignment] L I2L ★

DI12 low assignment.

[DI12 High Assignment] L I2H ★

DI12 high assignment.

[DI13 assignment] L I3A - Menu

Access

[Complete settings] ➞ [Input/Output] ➞ [I/O assignment] ➞ [DI13 assignment]

About This Menu

Identical to **[DI1 assignment] L I1A -** menu *(see page 468)*.

Following parameters can be accessed if VW3A3203 I/O extension module has been inserted.

[DI13 Low Assignment] L I3L ★

DI13 low assignment.

[DI13 High Assignment] L I3H ★

DI13 high assignment.

[DI14 assignment] L I4A - Menu

Access

[Complete settings] ➡ [Input/Output] ➡ [I/O assignment] ➡ [DI14 assignment]

About This Menu

Identical to **[DI1 assignment] L I1A -** menu *(see page 468)*.

Following parameters can be accessed if VW3A3203 I/O extension module has been inserted.

[DI14 Low Assignment] L I4L ★

DI14 low assignment.

[DI14 High Assignment] L I4H ★

DI14 high assignment.

[DI15 assignment] L I5A - Menu

Access

[Complete settings] ➡ [Input/Output] ➡ [I/O assignment] ➡ [DI15 assignment]

About This Menu

Identical to **[DI1 assignment] L I1A -** menu *(see page 468)*.

Following parameters can be accessed if VW3A3203 I/O extension module has been inserted.

[DI15 Low Assignment] L I5L ★

DI15 low assignment.

[DI15 High Assignment] L I5H ★

DI15 high assignment.

[DI16 assignment] L I6A - Menu

Access

[Complete settings] ➡ [Input/Output] ➡ [I/O assignment] ➡ [DI16 assignment]

About This Menu

Identical to **[DI1 assignment] L I1A -** menu *(see page 468)*.

Following parameters can be accessed if VW3A3203 I/O extension module has been inserted.

[DI16 Low Assignment] L I6L ★

DI16 low assignment.

[DI16 High Assignment] L I6H ★

DI16 high assignment.

[DI5 Pulse Input Assign] P I5A - Menu

Access

[Complete settings] ➡ **[Input/Output]** ➡ **[I/O assignment]** ➡ **[DI5 Pulse Input Assign]**

About This Menu

Following parameters can be accessed on the Graphic Display Terminal by pressing the OK key on the **[DI5 Frequency Measured]** PFC5 parameter.

[DI5 Pulse Input Assign] P I5A

DI5 pulse input assignment.

It displays all the functions associated with the pulse input in order to verify, for example, for compatibility problems.

If no functions have been assigned, **[No]** no is displayed.

[DI6 Pulse Input Assign] P I6A - Menu

Access

[Complete settings] ➡ **[Input/Output]** ➡ **[I/O assignment]** ➡ **[Pulse Input DI6 Assign]**

About This Menu

Identical to **[DI5 Pulse Input Assign]** P I5A - *(see page 134)*.

Following parameters can be accessed on the Graphic Display Terminal by pressing the OK key on the **[DI6 Frequency Measured]** PFC6 parameter.

[Pulse Input DI6 Assign] P I6A

Pulse Input DI6 Assignment.

[AI1 assignment] AI1A - Menu

Access

[Complete settings] ➡ **[Input/Output]** ➡ **[I/O assignment]** ➡ **[AI1 assignment]**

[AI1 Assignment] AI1A

Analog input AI1 functions assignment.

Read-only parameter, cannot be configured. It displays all the functions associated with input AI1 in order to verify, for example, for compatibility problems.

If no functions have been assigned, **[No]** no is displayed.

[AI2 assignment] AI2A - Menu

Access

[Complete settings] ➡ **[Input/Output]** ➡ **[I/O assignment]** ➡ **[AI2 assignment]**

About This Menu

Identical to **[AI1 assignment]** AI1A - menu *(see page 472)*.

[AI2 Assignment] AI2A

AI2 assignment.

[AI3 assignment] A I 3 A - Menu

Access

[Complete settings] ➡ [Input/Output] ➡ [I/O assignment] ➡ [AI3 assignment]

About This Menu

Identical to **[AI1 assignment] A I 1 A -** menu *(see page 472)*.

[AI3 assignment] A I 3 A

AI3 assignment.

[AI4 assignment] A I 4 A - Menu

Access

[Complete settings] ➡ [Input/Output] ➡ [I/O assignment] ➡ [AI4 assignment]

About This Menu

Identical to **[AI1 assignment] A I 1 A -** menu *(see page 472)*.

[AI4 Assignment] A I 4 A ★

AI4 assignment.

This parameter can be accessed if VW3A3203 I/O extension module has been inserted.

[AI5 assignment] A I 5 A - Menu

Access

[Complete settings] ➡ [Input/Output] ➡ [I/O assignment] ➡ [AI5 assignment]

About This Menu

Identical to **[AI1 assignment] A I 1 A -** menu *(see page 472)*.

[AI5 Assignment] A I 5 A ★

AI5 assignment.

This parameter can be accessed if VW3A3203 I/O extension module has been inserted.

[AIV1 assignment] AV IA - Menu

Access

[Complete settings] ➡ [Input/Output] ➡ [I/O assignment] ➡ [AIV1 assignment]

[AIV1 Assignment] AV IA

Virtual analog input 1 function assignment.

Read-only parameter, cannot be configured. It displays all the functions associated with virtual analog input 1 in order to verify, for example, for compatibility problems. If no functions have been assigned, **[No]** nO is displayed.

[AIV2 assignment] AV 2A - Menu

Access

[Complete settings] ➡ [Input/Output] ➡ [I/O assignment] ➡ [AIV2 assignment]

About This Menu

Identical to **[AIV1 assignment] AV IA -** menu *(see page 474)*

[AIV2 Assignment] AV IA

Virtual analog input 2 function assignment.

[AIV3 assignment] AV 3A - Menu

Access

[Complete settings] ➡ [Input/Output] ➡ [I/O assignment] ➡ [AIV3 assignment]

About This Menu

Identical to **[AIV1 assignment] AV IA -** menu *(see page 474)*

[AIV3 Assignment] AV IA

Virtual analog input 3 function assignment.

[DI50 Assignment] d 5 0 A - Menu

Access

[Complete settings] ➞ [Input/Output] ➞ [I/O assignment] ➞ [DI50 Assignment]

About This Menu

Following parameters can be accessed on ATV660 or ATV680, equipped with cabinet IO, and if **[Access Level]** L A C is set to **[Expert]** E P r.

[DI50 Low Assignment] d 5 0 L

DI50 low assignment.

[DI50 High Assignment] d 5 0 H

DI50 high assignment.

[DI51 Assignment] d 5 1 A - Menu

Access

[Complete settings] ➞ [Input/Output] ➞ [I/O assignment] ➞ [DI51 Assignment]

About This Menu

Following parameters can be accessed on ATV660 or ATV680, equipped with cabinet IO, and if **[Access Level]** L A C is set to **[Expert]** E P r.

[DI51 Low Assignment] d 5 1 L

DI51 low assignment.

[DI51 High Assignment] d 5 1 H

DI51 high assignment.

[DI52 Assignment] d S 2 A - Menu

Access

[Complete settings] ➡ [Input/Output] ➡ [I/O assignment] ➡ [DI52 Assignment]

About This Menu

Following parameters can be accessed on ATV660 or ATV680, equipped with cabinet IO, and if **[Access Level]** L A C is set to **[Expert]** E P r.

[DI52 Low Assignment] d S 2 L

DI52 low assignment.

Settings	Code/Value	Description
[No]	n o	Not assigned
[Freewheel stop]	n S t	Freewheel stop
[Ext Error assign]	E t F	External error assignment
[Drive Lock]	L E S	Drive lock assignment
[Monitor Circuit A]	ı F A A	Monitoring circuit A assignment
[Monitor Circuit B]	ı F A b	Monitoring circuit B assignment
[Monitor Circuit C]	ı F A C	Monitoring circuit C assignment
[Monitor Circuit D]	ı F A d	Monitoring circuit D assignment
[Cabinet Circuit A]	C F A A	Cabinet circuit A assignment
[Cabinet Circuit B]	C F A b	Cabinet circuit B assignment
[Cabinet Circuit C]	C F A C	Cabinet circuit C assignment
[Motor Winding A]	t F A A	Motor winding A assignment
[Motor Winding B]	t F A b	Motor winding B assignment
[Motor Bearing A]	t F A C	Motor bearing A assignment
[Motor Bearing B]	t F A d	Motor bearing B assignment

[DI52 High Assignment] d S 2 H

DI52 high assignment.

Settings	Code/Value	Description
[No]	n o	Not assigned
[Forced local]	F L o	Forced local mode
[Fault reset]	r S F	Fault reset
[Eternal Error]	E t F	External error
[Drive Lock]	L E S	Drive lock assignment
[Product Restart Assign]	r P A	Restart product
[Monitor Circuit A]	ı F A A	Monitoring circuit A assignment
[Monitor Circuit B]	ı F A b	Monitoring circuit B assignment
[Monitor Circuit C]	ı F A C	Monitoring circuit C assignment
[Monitor Circuit D]	ı F A d	Monitoring circuit D assignment
[Cabinet Circuit A]	C F A A	Cabinet circuit A assignment
[Cabinet Circuit B]	C F A b	Cabinet circuit B assignment
[Cabinet Circuit C]	C F A C	Cabinet circuit C assignment
[Motor Winding A]	t F A A	Motor winding A assignment
[Motor Winding B]	t F A b	Motor winding B assignment
[Motor Bearing A]	t F A C	Motor bearing A assignment
[Motor Bearing B]	t F A d	Motor bearing B assignment
[Mains Contactor]	L L C	Mains contactor control

[DI53 Assignment] d S 3 A - Menu

Access

[Complete settings] ➞ **[Input/Output]** ➞ **[I/O assignment]** ➞ **[DI53 Assignment]**

About This Menu

Identical to **[DI52 Assignment]** d S 2 A - Menu. *(see page 476)*

Following parameters can be accessed on ATV660 or ATV680, equipped with cabinet IO, and if **[Access Level]** L A C is set to **[Expert]** E P r .

[DI53 Low Assignment] d S 3 L

DI53 low assignment.

[DI53 High Assignment] d S 3 H

DI53 high assignment.

[DI54 Assignment] d S 4 A - Menu

Access

[Complete settings] ➞ **[Input/Output]** ➞ **[I/O assignment]** ➞ **[DI54 Assignment]**

About This Menu

Identical to **[DI52 Assignment]** d S 2 A - Menu. *(see page 476)*

Following parameters can be accessed on ATV660 or ATV680, equipped with cabinet IO, and if **[Access Level]** L A C is set to **[Expert]** E P r .

[DI54 Low Assignment] d S 4 L

DI54 low assignment.

[DI54 High Assignment] d S 4 H

DI54 high assignment.

[DI55 Assignment] d S 5 A - Menu

Access

[Complete settings] ➞ **[Input/Output]** ➞ **[I/O assignment]** ➞ **[DI55 Assignment]**

About This Menu

Identical to **[DI52 Assignment]** d S 2 A - Menu. *(see page 476)*

Following parameters can be accessed on ATV660 or ATV680, equipped with cabinet IO, and if **[Access Level]** L A C is set to **[Expert]** E P r .

[DI55 Low Assignment] d S 5 L

DI55 low assignment.

[DI55 High Assignment] d S 5 H

DI55 high assignment.

[DI56 Assignment] d S 6 A - Menu

Access

[Complete settings] ➡ **[Input/Output]** ➡ **[I/O assignment]** ➡ **[DI56 Assignment]**

About This Menu

Identical to **[DI52 Assignment]** d S 2 A - Menu. *(see page 476)*

Following parameters can be accessed on ATV660 or ATV680, equipped with cabinet IO, and if **[Access Level]** L A C is set to **[Expert]** E P r .

[DI56 Low Assignment] d S 6 L

DI56 low assignment.

[DI56 High Assignment] d S 6 H

DI56 high assignment.

[DI57 Assignment] d S 7 A - Menu

Access

[Complete settings] ➡ **[Input/Output]** ➡ **[I/O assignment]** ➡ **[DI57 Assignment]**

About This Menu

Identical to **[DI52 Assignment]** d S 2 A - Menu. *(see page 476)*

Following parameters can be accessed on ATV660 or ATV680, equipped with cabinet IO, and if **[Access Level]** L A C is set to **[Expert]** E P r .

[DI57 Low Assignment] d S 7 L

DI57 low assignment.

[DI57 High Assignment] d S 7 H

DI57 high assignment.

[DI58 Assignment] d S 8 A - Menu

Access

[Complete settings] ➡ **[Input/Output]** ➡ **[I/O assignment]** ➡ **[DI58 Assignment]**

About This Menu

Identical to **[DI52 Assignment]** d S 2 A - Menu. *(see page 476)*

Following parameters can be accessed on ATV660 or ATV680, equipped with cabinet IO, and if **[Access Level]** L A C is set to **[Expert]** E P r .

[DI58 Low Assignment] d S 8 L

DI58 low assignment.

[DI58 High Assignment] d S 8 H

DI58 high assignment.

[DI59 Assignment] d S 9 A - Menu

Access

[Complete settings] ➞ **[Input/Output]** ➞ **[I/O assignment]** ➞ **[DI59 Assignment]**

About This Menu

Identical to **[DI52 Assignment]** d S 2 A - Menu. *(see page 476)*

Following parameters can be accessed on ATV660 or ATV680, equipped with cabinet IO, and if **[Access Level]** L A C is set to **[Expert]** E P r .

[DI59 Low Assignment] d S 9 L

DI59 low assignment.

[DI59 High Assignment] d S 9 H

DI59 high assignment.

Section 8.54
[Input/Output] - [DI/DQ]

What Is in This Section?

This section contains the following topics:

Topic	Page
[DI1 Configuration] d i 1 - Menu	481
[DI2 Configuration] d i 2 - Menu	481
[DI3 Configuration] d i 3 - Menu	482
[DI4 Configuration] d i 4 - Menu	482
[DI5 Configuration] d i 5 - Menu	483
[DI6 Configuration] d i 6 - Menu	483
[DI11 Configuration] d i 11 - Menu	483
[DI12 Configuration] d i 12 - Menu	484
[DI13 Configuration] d i 13 - Menu	484
[DI14 Configuration] d i 14 - Menu	484
[DI15 Configuration] d i 15 - Menu	485
[DI16 Configuration] d i 16 - Menu	485
[DI5 Pulse Config] P A i 5 - Menu	486
[DI6 Pulse Config] P A i 6 - Menu	487
[DQ11 Configuration] d o 11 - Menu	488
[DQ12 Configuration] d o 12 - Menu	490
[DI50 Configuration] d i 5 0 - Menu	491
[DI51 Configuration] d i 5 1 - Menu	491
[DI52 Configuration] d i 5 2 - Menu	492
[DI53 Configuration] d i 5 3 - Menu	494
[DI54 Configuration] d i 5 4 - Menu	494
[DI55 Configuration] d i 5 5 - Menu	495
[DI56 Configuration] d i 5 6 - Menu	495
[DI57 Configuration] d i 5 7 - Menu	496
[DI58 Configuration] d i 5 8 - Menu	496
[DI59 Configuration] d i 5 9 - Menu	497

[DI1 Configuration] d I 1 - Menu

Access

[Complete settings] ➡ [Input/Output] ➡ [DI/DQ] ➡ [DI1 Configuration]

[DI1 Low Assignment] L I1L

DI1 low assignment.

Read-only parameter, cannot be configured. It displays all the functions associated with digital input DI1 in order to verify, for example, for compatibility problems.

If no functions have been assigned, **[No]** n o is displayed.

[DI1 High Assignment] L I1H

DI1 high assignment.

Read-only parameter, cannot be configured. It displays all the functions associated with digital input DI1 in order to verify, for example, for compatibility problems.

If no functions have been assigned, **[No]** n o is displayed.

[DI1 Delay] L I1d

DI1 delay.

NOTE: Commands received via this digital input are processed once the delay time set via this parameter has elapsed.

Setting	Description
0...200 ms	Setting range **Factory setting**: 5 ms

[DI2 Configuration] d I2 - Menu

Access

[Complete settings] ➡ [Input/Output] ➡ [DI/DQ] ➡ [DI2 Configuration]

About This Menu

Identical to **[DI1 Configuration]** d I 1 - menu *(see page 481)*.

[DI2 Low Assignment] L 2L

DI2 low assignment.

[DI2 High Assignment] L 2H

DI2 high assignment.

[DI2 Delay] L 2d

DI2 delay.

[DI3 Configuration] d I 3 - Menu

Access

[Complete settings] ➡ [Input/Output] ➡ [DI/DQ] ➡ [DI3 Configuration]

About This Menu

Identical to **[DI1 Configuration] d I 1 -** menu *(see page 481)*.

[DI3 Low Assignment] L 3 L

DI3 low assignment.

[DI3 High Assignment] L 3 H

DI3 high assignment.

[DI3 Delay] L 3 d

DI3 delay.

[DI4 Configuration] d I 4 - Menu

Access

[Complete settings] ➡ [Input/Output] ➡ [DI/DQ] ➡ [DI4 Configuration]

About This Menu

Identical to **[DI1 Configuration] d I 1 -** menu *(see page 481)*.

[DI4 Low Assignment] L 4 L

DI4 low assignment.

[DI4 High Assignment] L 4 H

DI4 high assignment.

[DI4 Delay] L 4 d

DI4 delay.

[DI5 Configuration] d I 5 - Menu

Access

[Complete settings] ➡ [Input/Output] ➡ [DI/DQ] ➡ [DI5 Configuration]

About This Menu

Identical to **[DI1 Configuration] d I 1 -** menu *(see page 481)*.

[DI5 Low Assignment] L 5 L

DI5 low assignment.

[DI5 High Assignment] L 5 H

DI5 high assignment.

[DI5 Delay] L 5 d

DI5 delay.

[DI6 Configuration] d I 6 - Menu

Access

[Complete settings] ➡ [Input/Output] ➡ [DI/DQ] ➡ [DI6 Configuration]

About This Menu

Identical to **[DI1 Configuration] d I 1 -** menu *(see page 481)*.

[DI6 Low Assignment] L 6 L

DI6 low assignment.

[DI6 High Assignment] L 6 H

DI6 high assignment.

[DI6 Delay] L 6 d

DI6 delay.

[DI11 Configuration] d I 1 1 - Menu

Access

[Complete settings] ➡ [Input/Output] ➡ [DI/DQ] ➡ [DI11 Configuration]

About This Menu

Identical to **[DI1 Configuration] d I 1 -** menu *(see page 481)*.

Following parameters can be accessed if VW3A3203 I/O extension module has been inserted.

[DI11 Low Assignment] L 1 1 L ★

DI11 low assignment.

[DI11 High Assignment] L 1 1 H ★

DI11 high assignment.

[DI11 Delay] L 1 1 d ★

DI11 delay.

[DI12 Configuration] d I I 2 - Menu

Access

[Complete settings] ➡ [Input/Output] ➡ [DI/DQ] ➡ [DI12 Configuration]

About This Menu

Identical to **[DI1 Configuration] d I I -** menu *(see page 481)*.

Following parameters can be accessed if VW3A3203 I/O extension module has been inserted.

[DI12 Low Assignment] L I 2 L ★

DI12 low assignment.

[DI12 High Assignment] L I 2 H ★

DI12 high assignment.

[DI12 Delay] L I 2 d ★

DI12 delay.

[DI13 Configuration] d I I 3 - Menu

Access

[Complete settings] ➡ [Input/Output] ➡ [DI/DQ] ➡ [DI13 Configuration]

About This Menu

Identical to **[DI1 Configuration] d I I -** menu *(see page 481)*.

Following parameters can be accessed if VW3A3203 I/O extension module has been inserted.

[DI13 Low Assignment] L I 3 L ★

DI13 low assignment.

[DI13 High Assignment] L I 3 H ★

DI13 high assignment.

[DI13 Delay] L I 3 d ★

DI13 delay.

[DI14 Configuration] d I I 4 - Menu

Access

[Complete settings] ➡ [Input/Output] ➡ [DI/DQ] ➡ [DI14 Configuration]

About This Menu

Identical to **[DI1 Configuration] d I I -** menu *(see page 481)*.

Following parameters can be accessed if VW3A3203 I/O extension module has been inserted.

[DI14 Low Assignment] L I 4 L ★

DI14 low assignment.

[DI14 High Assignment] L I 4 H ★

DI14 high assignment.

[DI14 Delay] L I 4 d ★

DI14 delay.

[DI15 Configuration] d I 15 - Menu

Access

[Complete settings] ➡ [Input/Output] ➡ [DI/DQ] ➡ [DI15 Configuration]

About This Menu

Identical to **[DI1 Configuration] d I 1 -** menu *(see page 481)*.

Following parameters can be accessed if VW3A3203 I/O extension module has been inserted.

[DI15 Low Assignment] L I5L ★

DI15 low assignment.

[DI15 High Assignment] L I5H ★

DI15 high assignment.

[DI15 Delay] L I5d ★

DI15 delay.

[DI16 Configuration] d I 16 - Menu

Access

[Complete settings] ➡ [Input/Output] ➡ [DI/DQ] ➡ [DI16 Configuration]

About This Menu

Identical to **[DI1 Configuration] d I 1 -** menu *(see page 481)*.

Following parameters can be accessed if VW3A3203 I/O extension module has been inserted.

[DI16 Low Assignment] L I6L ★

DI16 low assignment.

[DI16 High Assignment] L I6H ★

DI16 high assignment.

[DI16 Delay] L I6d ★

DI16 delay.

[DI5 Pulse Config] PA i5 - Menu

Access

[Complete settings] ➡ [Input/Output] ➡ [DI/DQ] ➡ [DI5 Pulse Config]

About This Menu

Following parameters can be accessed on the Graphic Display Terminal by pressing the **OK** key on the **[DI5 Frequency Measured]** PFC5 parameter.

[DI5 Pulse Input Assign] Pi5A

Di5 pulse input assignment.

It displays all the functions associated with the pulse input in order to verify, for example, for compatibility problems.

If no functions have been assigned, **[No]** no is displayed.

[DI5 PulseInput Low Freq] Pi L5

DI5 pulse input low frequency.

Pulse input scaling parameter of 0% in Hz x 10 unit.

Setting	Description
0.00...30000.00 Hz	Setting range **Factory setting**: 0.00 Hz

[DI5 PulseInput High Freq] Pi H5

DI5 pulse input high frequency.

Pulse input scaling parameter of 100% in Hz x 10 unit.

Setting	Description
0.00...30.00 kHz	Setting range **Factory setting**: 30.00 kHz

[DI5 Frequency Filter] PFi5

Interference filtering pulse input cut-off time of the low-filter.

Setting	Description
0...1,000 ms	Setting range **Factory setting**: 0 ms

[DI6 Pulse Config] PA i6 - Menu

Access

[Complete settings] ➞ **[Input/Output]** ➞ **[DI/DQ]** ➞ **[DI6 Pulse Config]**

About This Menu

Following parameters can be accessed on the Graphic Display Terminal by pressing the **OK** key on the **[DI6 Frequency Measured]** PFC6 parameter.

[DI6 Pulse Input Assign] Pi6A

Filtered customer pulse input frequency reference.

Identical to **[DI5 Pulse Input Assign]** Pi5A *(see page 134)*.

[DI6 PulseInput Low Freq] Pi L6

DI6 pulse input low frequency.

Identical to **[DI5 PulseInput Low Freq]** Pi L5 *(see page 135)*.

[DI6 PulseInput High Freq] Pi H6

DI6 pulse input high frequency.

Identical to **[DI5 PulseInput High Freq]** Pi H5 *(see page 135)*.

[DI6 Frequency Filter] PFi6

Interference filtering pulse input cut-off time of the low-filter.

Identical to **[DI5 Frequency Filter]** PFi5 *(see page 135)*.

[DQ11 Configuration] d o 1 1 - Menu

Access

[Complete settings] ➡ **[Input/Output]** ➡ **[DI/DQ]** ➡ **[DQ11 Configuration]**

About This Menu

Following parameters can be accessed if VW3A3203 I/O extension module has been inserted.

[DQ11 Assignment] d o 1 1★

Digital output 11 assignment.

Identical to **[R2 Assignment]** r 2 *(see page 520)*

[DQ11 actv delay] d 1 1 d★

DQ11 activation delay time.

The delay cannot be set for the **[Operating State "Fault"]** F L t and **[Mains Contactor]** L L C assignments, and remains at 0.

The state modification only takes effect once the configured time has elapsed when the information becomes true.

Setting	Description
0...60,000 ms	Setting range 0...9,999 ms then 10.00...60.00 s on the Graphic Display Terminal **Factory setting**: 0 ms

[DQ11 status] d 1 1 S★

DQ11 status (output active level).

Setting	Code / Value	Description
[1]	P o S	State 1 when the information is true **Factory Setting**
[0]	n E G	State 0 when the information is true

The configuration **[1]** P o S cannot be modified for the following assignments:

- **[Operating State "Fault"]** F L t,
- **[Mains Contactor]** L L C,
- **[Priming]** P r 1 n,
- **[Jockey]** J o K Y,
- **[Pump 1 Cmd]** n P o 1,
- **[Pump 2 Cmd]** n P o 2,
- **[Pump 3 Cmd]** n P o 3,
- **[Pump 4 Cmd]** n P o 4,
- **[Pump 5 Cmd]** n P o 5,
- **[Pump 6 Cmd]** n P o 6,
- **[M/P Master Activated]** n P n A.

[DQ11 hold delay] d 1 1 H★

DQ11 holding delay time.

The holding time cannot be set for the **[Operating State "Fault"]** F L t, and **[Mains Contactor]** L L C assignments, and remains at 0.

The holding time cannot be set and remains at 0 for the following assignments:

- **[Operating State "Fault"]** F L t,
- **[Mains Contactor]** L L C,
- **[Priming]** P r 1 n,
- **[Jockey]** J o K Y,

- **[Pump 1 Cmd]** *ПPo 1*,
- **[Pump 2 Cmd]** *ПPo2*,
- **[Pump 3 Cmd]** *ПPo3*,
- **[Pump 4 Cmd]** *ПPo4*,
- **[Pump 5 Cmd]** *ПPo5*,
- **[Pump 6 Cmd]** *ПPo6*,
- **[M/P Master Activated]** *ПPПA*.

The state modification only takes effect once the configured time has elapsed when the information becomes false.

Setting	Description
0...9,999 ms	Setting range **Factory setting**: 0 ms

[DQ12 Configuration] dO I2 - Menu

Access

[Complete settings] ➞ [Input/Output] ➞ [DI/DQ] ➞ [DQ12 Configuration]

About This Menu

Identical to **[DQ11 Configuration]** dO I1 - Menu *(see page 488)*.

Following parameters can be accessed if VW3A3203 I/O extension module has been inserted.

[DQ12 Assignment] dO I2 ★

Digital output 12 assignment.

[DQ12 actv delay] d I2d ★

DQ12 activation delay time.

[DQ12 status] d I2S ★

DQ12 status (output active level).

[DQ12 hold delay] d I2H ★

DQ12 holding delay time.

[DI50 Configuration] d I 5 0 - Menu

Access

[Complete settings] ➡ **[Input/Output]** ➡ **[DI/DQ]** ➡ **[DI50 Configuration]**

About This Menu

Following parameters can be accessed on ATV660 or ATV680, equipped with cabinet IO, and if **[Access Level]** L A C is set to **[Expert]** E P r.

NOTE: DI50 up to DI59 Inputs are used inside the Drive Systems enclosure for control and monitoring circuits.

[DI50 Low Assignment] d 5 0 L

DI50 low assignment.

[DI50 High Assignment] d 5 0 H

DI50 high assignment.

[DI50 delay] d 5 0 d

DI50 delay.

NOTE: Commands received via this digital input are processed once the delay time set via this parameter has elapsed.

Setting	Description
0...200 ms	Setting range **Factory setting**: 5 ms

[DI51 Configuration] d I 5 1 - Menu

Access

[Complete settings] ➡ **[Input/Output]** ➡ **[DI/DQ]** ➡ **[DI51 Configuration]**

About This Menu

Following parameters can be accessed on ATV660 or ATV680, equipped with cabinet IO, and if **[Access Level]** L A C is set to **[Expert]** E P r.

NOTE: DI50 up to DI59 Inputs are used inside the Drive Systems enclosure for control and monitoring circuits.

[DI51 Low Assignment] d 5 1 L

DI51 low assignment.

[DI51 High Assignment] d 5 1 H

DI51 high assignment.

[DI51 delay] d 5 1 d

DI51 delay.

NOTE: Commands received via this digital input are processed once the delay time set via this parameter has elapsed.

Setting	Description
0...200 ms	Setting range **Factory setting**: 5 ms

[DI52 Configuration] d I 5 2 - Menu

Access

[Complete settings] ➞ [Input/Output] ➞ [DI/DQ] ➞ [DI52 Configuration]

About This Menu

Following parameters can be accessed on ATV660 or ATV680, equipped with cabinet IO, and if **[Access Level]** L A C is set to **[Expert]** E P r .

NOTE: DI50 up to DI59 Inputs are used inside the Drive Systems enclosure for control and monitoring circuits.

[DI52 Low Assignment] d 5 2 L

DI52 low assignment.

Settings	Code/Value	Description
[No]	n o	Not assigned
[Freewheel stop]	n 5 t	Freewheel stop
[Ext Error assign]	E t F	External error assignment
[Drive Lock]	L E 5	Drive lock assignment
[Monitor Circuit A]	I F A A	Monitoring circuit A assignment
[Monitor Circuit B]	I F A b	Monitoring circuit B assignment
[Monitor Circuit C]	I F A C	Monitoring circuit C assignment
[Monitor Circuit D]	I F A d	Monitoring circuit D assignment
[Cabinet Circuit A]	C F A A	Cabinet circuit A assignment
[Cabinet Circuit B]	C F A b	Cabinet circuit B assignment
[Cabinet Circuit C]	C F A C	Cabinet circuit C assignment
[Motor Winding A]	t F A A	Motor winding A assignment
[Motor Winding B]	t F A b	Motor winding B assignment
[Motor Bearing A]	t F A C	Motor bearing A assignment
[Motor Bearing B]	t F A d	Motor bearing B assignment

[DI52 High Assignment] d 5 2 H

DI52 high assignment.

Settings	Code/Value	Description
[No]	n o	Not assigned
[Forced local]	F L o	Forced local mode
[Fault reset]	r 5 F	Fault reset
[Eternal Error]	E t F	External error
[Drive Lock]	L E 5	Drive lock assignment
[Product Restart Assign]	r P A	Restart product
[Monitor Circuit A]	I F A A	Monitoring circuit A assignment
[Monitor Circuit B]	I F A b	Monitoring circuit B assignment
[Monitor Circuit C]	I F A C	Monitoring circuit C assignment
[Monitor Circuit D]	I F A d	Monitoring circuit D assignment
[Cabinet Circuit A]	C F A A	Cabinet circuit A assignment
[Cabinet Circuit B]	C F A b	Cabinet circuit B assignment
[Cabinet Circuit C]	C F A C	Cabinet circuit C assignment
[Motor Winding A]	t F A A	Motor winding A assignment
[Motor Winding B]	t F A b	Motor winding B assignment
[Motor Bearing A]	t F A C	Motor bearing A assignment
[Motor Bearing B]	t F A d	Motor bearing B assignment

Settings	Code/Value	Description
[Mains Contactor]	LLC	Mains contactor control

[DI52 delay] d52d

DI52 delay.

NOTE: Commands received via this digital input are processed once the delay time set via this parameter has elapsed.

Setting	Description
0...200 ms	Setting range **Factory setting**: 5 ms

[DI53 Configuration] d I 5 3 - Menu

Access

[Complete settings] ➡ **[Input/Output]** ➡ **[DI/DQ]** ➡ **[DI53 Configuration]**

About This Menu

Identical to **[DI52 Configuration]** d I 5 2 Menu. *(see page 492)*

Following parameters can be accessed on ATV660 or ATV680, equipped with cabinet IO, and if **[Access Level]** L A C is set to **[Expert]** E P r .

NOTE: DI50 up to DI59 Inputs are used inside the Drive Systems enclosure for control and monitoring circuits.

[DI53 Low Assignment] d 5 3 L

DI53 low assignment.

[DI53 High Assignment] d 5 3 H

DI53 high assignment.

[DI53 delay] d 5 3 d

DI53 delay.

NOTE: Commands received via this digital input are processed once the delay time set via this parameter has elapsed.

Setting	Description
0...200 ms	Setting range **Factory setting**: 5 ms

[DI54 Configuration] d I 5 4 - Menu

Access

[Complete settings] ➡ **[Input/Output]** ➡ **[DI/DQ]** ➡ **[DI54 Configuration]**

About This Menu

Identical to **[DI52 Configuration]** d I 5 2 - Menu. *(see page 492)*

Following parameters can be accessed on ATV660 or ATV680, equipped with cabinet IO, and if **[Access Level]** L A C is set to **[Expert]** E P r .

NOTE: DI50 up to DI59 Inputs are used inside the Drive Systems enclosure for control and monitoring circuits.

[DI54 Low Assignment] d 5 4 L

DI54 low assignment.

[DI54 High Assignment] d 5 4 H

DI54 high assignment.

[DI54 delay] d 5 4 d

DI54 delay.

NOTE: Commands received via this digital input are processed once the delay time set via this parameter has elapsed.

Setting	Description
0...200 ms	Setting range **Factory setting**: 5 ms

[DI55 Configuration] d I 5 5 - Menu

Access

[Complete settings] ➡ **[Input/Output]** ➡ **[DI/DQ]** ➡ **[DI55 Configuration]**

About This Menu

Identical to **[DI52 Configuration]** d I 5 2 - Menu. *(see page 492)*

Following parameters can be accessed on ATV660 or ATV680, equipped with cabinet IO, and if **[Access Level]** L A C is set to **[Expert]** E P r .

NOTE: DI50 up to DI59 Inputs are used inside the Drive Systems enclosure for control and monitoring circuits.

[DI55 Low Assignment] d 5 5 L

DI55 low assignment.

[DI55 High Assignment] d 5 5 H

DI55 high assignment.

[DI55 delay] d 5 5 d

DI55 delay.

NOTE: Commands received via this digital input are processed once the delay time set via this parameter has elapsed.

Setting	Description
0...200 ms	Setting range **Factory setting**: 5 ms

[DI56 Configuration] d I 5 6 - Menu

Access

[Complete settings] ➡ **[Input/Output]** ➡ **[DI/DQ]** ➡ **[DI56 Configuration]**

About This Menu

Identical to **[DI52 Configuration]** d I 5 2 - Menu. *(see page 492)*

Following parameters can be accessed on ATV660 or ATV680, equipped with cabinet IO, and if **[Access Level]** L A C is set to **[Expert]** E P r .

NOTE: DI50 up to DI59 Inputs are used inside the Drive Systems enclosure for control and monitoring circuits.

[DI56 Low Assignment] d 5 6 L

DI56 low assignment.

[DI56 High Assignment] d 5 6 H

DI56 high assignment.

[DI56 delay] d 5 6 d

DI56 delay.

NOTE: Commands received via this digital input are processed once the delay time set via this parameter has elapsed.

Setting	Description
0...200 ms	Setting range **Factory setting**: 5 ms

[DI57 Configuration] d I 5 7 - Menu

Access

[Complete settings] ➡ **[Input/Output]** ➡ **[DI/DQ]** ➡ **[DI57 Configuration]**

About This Menu

Identical to **[DI52 Configuration]** d I 5 2 - Menu. *(see page 492)*

Following parameters can be accessed on ATV660 or ATV680, equipped with cabinet IO, and if **[Access Level]** L A C is set to **[Expert]** E P r .

NOTE: DI50 up to DI59 Inputs are used inside the Drive Systems enclosure for control and monitoring circuits.

[DI57 Low Assignment] d 5 7 L

DI57 low assignment.

[DI57 High Assignment] d 5 7 H

DI57 high assignment.

[DI57 delay] d 5 7 d

DI57 delay.

NOTE: Commands received via this digital input are processed once the delay time set via this parameter has elapsed.

Setting	Description
0...200 ms	Setting range **Factory setting**: 5 ms

[DI58 Configuration] d I 5 8 - Menu

Access

[Complete settings] ➡ **[Input/Output]** ➡ **[DI/DQ]** ➡ **[DI58 Configuration]**

About This Menu

Identical to **[DI52 Configuration]** d I 5 2 - Menu. *(see page 492)*

Following parameters can be accessed on ATV660 or ATV680, equipped with cabinet IO, and if **[Access Level]** L A C is set to **[Expert]** E P r .

NOTE: DI50 up to DI59 Inputs are used inside the Drive Systems enclosure for control and monitoring circuits.

[DI58 Low Assignment] d 5 8 L

DI58 low assignment.

[DI58 High Assignment] d 5 8 H

DI58 high assignment.

[DI58 delay] d 5 8 d

DI58 delay.

NOTE: Commands received via this digital input are processed once the delay time set via this parameter has elapsed.

Setting	Description
0...200 ms	Setting range **Factory setting**: 5 ms

[DI59 Configuration] d I 5 9 - Menu

Access

[Complete settings] ➡ **[Input/Output]** ➡ **[DI/DQ]** ➡ **[DI59 Configuration]**

About This Menu

Identical to **[DI52 Configuration]** d I 5 2 - Menu. *(see page 492)*

Following parameters can be accessed on ATV660 or ATV680, equipped with cabinet IO, and if **[Access Level]** L A C is set to **[Expert]** E P r .

NOTE: DI50 up to DI59 Inputs are used inside the Drive Systems enclosure for control and monitoring circuits.

[DI59 Low Assignment] d 5 9 L

DI59 low assignment.

[DI59 High Assignment] d 5 9 H

DI59 high assignment.

[DI59 delay] d 5 9 d

DI59 delay.

NOTE: Commands received via this digital input are processed once the delay time set via this parameter has elapsed.

Setting	Description
0...200 ms	Setting range **Factory setting**: 5 ms

Section 8.55
[Input/Output] - [Analog I/O]

What Is in This Section?

This section contains the following topics:

Topic	Page
[AI1 configuration] *AI1* - Menu	499
[AI2 configuration] *AI2* - Menu	502
[AI3 configuration] *AI3* - Menu	504
[AI4 configuration] *AI4* - Menu	505
[AI5 configuration] *AI5* - Menu	507
[AQ1 configuration] *AQ1* - Menu	509
[AQ2 configuration] *AQ2* - Menu	513
[Virtual AI1] *AV1* - Menu	515
[Virtual AI2] *AU2* - Menu	516
[Virtual AI3] *AU3* - Menu	516

[AI1 configuration] A I 1 - Menu

Access

[Complete settings] ➡ **[Input/Output]** ➡ **[AI/AQ]** ➡ **[AI1 configuration]**

About This Menu

The input can be delinearized by configuring an intermediate point on the input/output curve of this input:

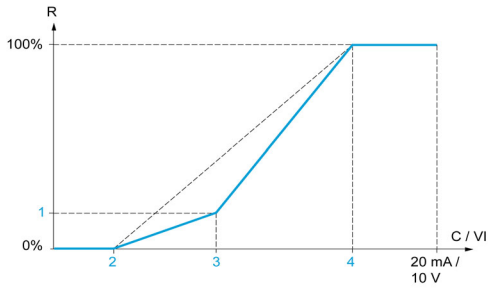

R Reference
C / VI Current or Voltage Input
1 **[Y Interm. point]**
2 **[Min value]** (0%)
3 **[X Interm. point]**
4 **[Max value]** (100%)

NOTE: For **[X Interm. point]**, 0% corresponds to **[Min value]** and 100% to **[Max value]**.

[AI1 Assignment] A I A

Analog input AI1 functions assignment.

Read-only parameter, cannot be configured. It displays all the functions associated with input AI1 in order to verify, for example, for compatibility problems.

If no functions have been assigned, **[No]** n o is displayed.

[AI1 Type] A I t

Configuration of analog input AI1.

Setting	Code / Value	Description
[Voltage]	10U	0-10 Vdc **Factory setting**
[Current]	0A	0-20 mA
[PTC Management]	PtC	1 to 6 PTC (in serial)
[KTY]	Kty	1 KTY84
[PT100]	1Pt2	1 PT100 connected with 2 wires
[PT1000]	1Pt3	1 PT1000 connected with 2 wires

[AI1 Min. value] U I L 1 ★

AI1 voltage scaling parameter of 0%.

This parameter can be accessed if **[AI1 Type]** A I 1t is set to **[Voltage]** 10U.

Setting	Description
0.0...10.0 Vdc	Setting range **Factory setting**: 0.0 Vdc

[AI1 Max. value] uAH1★

AI1 voltage scaling parameter of 100%.

This parameter can be accessed if **[AI1 Type]** AI1t is set to **[Voltage]** 10U.

Setting	Description
0.0...10.0 Vdc	Setting range **Factory setting**: 10.0 Vdc

[AI1 Min. value] CrL1★

AI1 current scaling parameter of 0%.

This parameter can be accessed if **[AI1 Type]** AI1t is set to **[Current]** 0A.

Setting	Description
0.0...20.0 mA	Setting range **Factory setting**: 0.0 mA

[AI1 Max. value] CrH1★

AI1 current scaling parameter of 100%.

This parameter can be accessed if **[AI1 Type]** AI1t is set to **[Current]** 0A.

Setting	Description
0.0...20.0 mA	Setting range **Factory setting**: 20.0 mA

[AI1 filter] AI1F

AI1 cutoff time of the low filter.

Setting	Description
0.00...10.00 s	Setting range **Factory setting**: 0.00 s

[AI1 Interm. point X] AI1E

Input delinearization point coordinate. Percentage of the physical input signal.

0% corresponds to **[AI1 min value]** (uIL1)

100% corresponds to **[AI1 max value]** (uIH1)

Setting	Description
0...100%	Setting range **Factory setting**: 0%

[AI1 Interm. point Y] AI1S

Input delinearization point coordinate (frequency reference).

Percentage of the internal frequency reference corresponding to the **[AI1 Interm. point X]** (AI1E) percentage of physical input signal.

Setting	Description
0...100%	Setting range **Factory setting**: 0%

[AI1 Range] A 1 L

AI1 scaling selection.

This parameter can be accessed if **[AI1 Type]** A 1 1E is set to **[Current]** 0A.

This parameter is forced to **[0-100%]** Pos if:

- **[AI1 Type]** A 1 1E is not set to **[Current]** 0A, or
- **[AI1 min. value]** CrL 1 is lower than 3.0 mA

Setting	Code / Value	Description
[0-100%]	Pos	Unidirectional: AI1 current scaling is 0% up to 100%. **Factory Setting**
[+/-100%]	PosnEG	Bidirectional: AI1 current scaling is -100% up to 100%. **[AI1 min. value]** CrL 1 corresponds to -100%. **[AI1 max. value]** CrH 1 corresponds to 100%.

[AI2 configuration] A I 2 - Menu

Access

[Complete settings] ➡ [Input/Output] ➡ [AI/AQ] ➡ [AI2 configuration]

[AI2 Assignment] A I 2 A

AI2 functions assignment.

Identical to **[AI1 Assignment] A I 1 A** *(see page 499)*.

[AI2 Type] A I 2 t

Configuration of analog input AI2.

Setting	Code / Value	Description
[Voltage]	10U	0-10 Vdc **Factory setting**
[Current]	0A	0-20 mA
[PTC Management]	PtC	1 to 6 PTC (in serial)
[KTY]	KtY	1 KTY84
[PT1000]	1Pt3	1 PT1000 connected with 2 wires
[PT100]	1Pt2	1 PT100 connected with 2 wires
[Water Prob]	LEuEL	Water level
[3PT1000]	3Pt3	3 PT1000 connected with 2 wires
[3PT100]	3Pt2	3 PT100 connected with 2 wires

[AI2 min value] U I L 2 ★

AI2 voltage scaling parameter of 0%.

This parameter can be accessed if **[AI2 Type] A I 2 t** is set to **[Voltage] 10U**.

Identical to **[AI1 min value] U I L 1** *(see page 499)*.

[AI2 Max .value] U I H 2 ★

AI2 voltage scaling parameter of 100%.

This parameter can be accessed if **[AI2 Type] A I 2 t** is set to **[Voltage] 10U**.

Identical to **[AI1 Max. value] U I H 1** *(see page 500)*.

[AI2 Min. value] C r L 2 ★

AI2 current scaling parameter of 0%.

This parameter can be accessed if **[AI2 Type] A I 2 t** is set to **[Current] 0A**.

Identical to **[AI1 Min. value] C r L 1** *(see page 500)*.

[AI2 Max. value] C r H 2 ★

AI2 current scaling parameter of 100%.

This parameter can be accessed if **[AI2 Type] A I 2 t** is set to **[Current] 0A**.

Identical to **[AI1 Max. value] C r H 1** *(see page 500)*.

[AI2 filter] A I 2 F

AI2 filter.

Identical to **[AI1 filter] A I 1 F** *(see page 500)*.

[AI2 Interm. point X] A I2E

AI2 delinearization input level.

Identical to **[AI1 Interm. point X]** A I1E *(see page 500)*.

[AI2 Interm. point Y] A I2S

AI2 delinearization output level.

Identical to **[AI1 Interm. point Y]** A I1S *(see page 500)*.

[AI2 Range] A I2L

AI2 scaling selection.

This parameter can be accessed if **[AI2 Type]** A I2t is set to **[Current]** 0A.

Identical to **[AI1 Type]** A I1t *(see page 503)*

[AI3 configuration] A I 3 - Menu

Access

[Complete settings] ➡ **[Input/Output]** ➡ **[AI/AQ]** ➡ **[AI3 configuration]**

[AI3 Assignment] A I 3 A

AI3 functions assignment.

Identical to **[AI1 Assignment]** A I I A *(see page 499)*.

[AI3 Type] A I 3 t

Configuration of analog input AI3.

Identical to **[AI2 Type]** A I 2 t *(see page 502)* with factory setting: **[Current]** 0 A.

[AI3 Min. value] u I L 3 ★

AI3 voltage scaling parameter of 0%.

Identical to **[AI1 Min. value]** u I L I *(see page 499)*.

This parameter can be accessed if **[AI3 Type]** A I 3 t is set to **[Voltage]** I 0 u.

[AI3 Max. value] u I H 3 ★

AI3 voltage scaling parameter of 100%.

Identical to **[AI1 Max. value]** u I H I *(see page 500)*.

This parameter can be accessed if **[AI3 Type]** A I 3 t is set to **[Voltage]** I 0 u.

[AI3 Min. value] C r L 3 ★

AI3 current scaling parameter of 0%.

Identical to **[AI1 Min. value]** C r L I *(see page 500)*.

This parameter can be accessed if **[AI3 Type]** A I 3 t is set to **[Current]** 0 A.

[AI3 Max. value] C r H 3 ★

AI3 current scaling parameter of 100%.

Identical to **[AI1 Max. value]** C r H I *(see page 500)*.

This parameter can be accessed if **[AI3 Type]** A I 3 t is set to **[Current]** 0 A.

[AI3 filter] A I 3 F

AI3 cutoff time of the low filter.

Identical to **[AI1 filter]** A I I F *(see page 500)*.

[AI3 X Interm. point] A I 3 E

AI3 delinearization input level.

Identical to **[AI1 Interm. point X]** A I I E *(see page 500)*.

[AI3 Y Interm. point] A I 3 S

AI3 delinearization output level.

Identical to **[AI1 Interm. point Y]** A I I S *(see page 500)*.

[AI3 Range] A I 3 L

AI3 scaling selection.

This parameter can be accessed if **[AI3 Type]** A I 3 t is set to **[Current]** 0 A.

Identical to **[AI1 Type]** A I I t *(see page 504)*

[AI4 configuration] AI4 - Menu

Access

[Complete settings] ➡ [Input/Output] ➡ [AI/AQ] ➡ [AI4 configuration]

[AI4 Assignment] AI4A ★

AI4 functions assignment.

This parameter can be accessed if VW3A3203 I/O extension module has been inserted.

Identical to **[AI1 Assignment]** AI1A *(see page 499)*.

[AI4 Type] AI4t ★

Configuration of analog input AI4.

This parameter can be accessed if VW3A3203 I/O extension module has been inserted.

Setting	Code / Value	Description
[Voltage]	10U	0-10 Vdc
[Current]	0A	0-20 mA
[Voltage +/-]	n10U	-10/+10 Vdc **Factory setting**

[AI4 Min value] UIL4 ★

AI4 voltage scaling parameter of 0%.

Identical to **[AI1 Min value]** UIL1 *(see page 499)*.

[AI4 Max. value] UIH4 ★

AI4 voltage scaling parameter of 100%.

Identical to **[AI1 Max. value]** UIH1 *(see page 500)*.

[AI4 Min. value] CrL4 ★

AI4 current scaling parameter of 0%.

Identical to **[AI1 Min. value]** CrL1 *(see page 500)*.

[AI4 Max. value] CrH4 ★

AI4 current scaling parameter of 100%.

Identical to **[AI1 Max. value]** CrH1 *(see page 500)*.

[AI4 filter] AI4F ★

AI4 cutoff time of the low filter.

This parameter can be accessed if VW3A3203 I/O extension module has been inserted.

Identical to **[AI1 filter]** AI1F *(see page 500)*.

[AI4 X Interm. point] AI4E ★

AI4 delinearization input level.

This parameter can be accessed if VW3A3203 I/O extension module has been inserted.

Identical to **[AI1 Interm. point X]** AI1E *(see page 500)*.

[AI4 Y Interm. point] A I 4 5 ★

AI4 delinearization output level.

This parameter can be accessed if VW3A3203 I/O extension module has been inserted.

Identical to **[AI1 Interm. point Y]** A I 1 5 *(see page 500)*.

[AI4 Range] A I 4 L

AI4 scaling selection.

This parameter can be accessed if **[AI4 Type]** A I 4 E is set to **[Current]** 0 A.

Identical to **[AI1 Type]** A I 1 E *(see page 506)*

[AI5 configuration] AI5 - Menu

Access

[Complete settings] ➡ [Input/Output] ➡ [AI/AQ] ➡ [AI5 configuration]

[AI5 Assignment] AI5A ★

AI5 functions assignment.

This parameter can be accessed if VW3A3203 I/O extension module has been inserted.

Identical to **[AI1 Assignment]** AI1A *(see page 499)*.

[AI5 Type] AI5t ★

Configuration of analog input AI5.

This parameter can be accessed if VW3A3203 I/O extension module has been inserted.

Identical to **[AI4 Type]** AI4t. *(see page 505)*

[AI5 Min. value] uiL5 ★

AI5 voltage scaling parameter of 0%.

Identical to **[AI1 Min. value]** uiL1 *(see page 499)*.

[AI5 Max. value] uiH5 ★

AI5 voltage scaling parameter of 100%.

Identical to **[AI1 Max. value]** uiH1 *(see page 500)*.

[AI5 Min. value] CrL5 ★

AI5 current scaling parameter of 0%.

Identical to **[AI1 Min. value]** CrL1 *(see page 500)*.

[AI5 Max. value] CrH5 ★

AI5 current scaling parameter of 100%.

Identical to **[AI1 Max. value]** CrH1 *(see page 500)*.

[AI5 filter] AI5F ★

AI5 cutoff time of the low filter.

This parameter can be accessed if VW3A3203 I/O extension module has been inserted.

Identical to **[AI1 filter]** AI1F *(see page 500)*.

[AI5 X Interm. point] AI5E ★

AI5 delinearization input level.

This parameter can be accessed if VW3A3203 I/O extension module has been inserted.

Identical to **[AI1 Interm. point X]** AI1E *(see page 500)*.

[AI5 Y Interm. point] AI5S ★

AI5 delinearization output level.

This parameter can be accessed if VW3A3203 I/O extension module has been inserted.

Identical to **[AI1 Interm. point Y]** AI1S *(see page 500)*.

[AI5 Range] *A I5L*

AI5 scaling selection.

This parameter can be accessed if **[AI5 Type]** *A I5t* is set to **[Current]** *0A*.

Identical to **[AI1 Type]** *A I1t* *(see page 508)*

[AQ1 configuration] AO1- Menu

Access

[Complete settings] ➡ [Input/Output] ➡ [AI/AQ] ➡ [AQ1 configuration]

Minimum and Maximum Output Values

The minimum output value, in volts, corresponds to the lower limit of the assigned parameter and the maximum value corresponds to its upper limit. The minimum value may be greater than the maximum value.

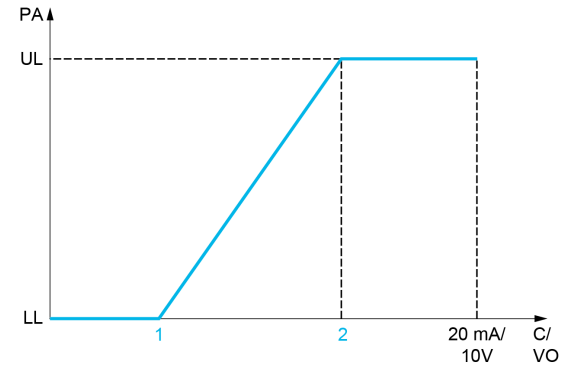

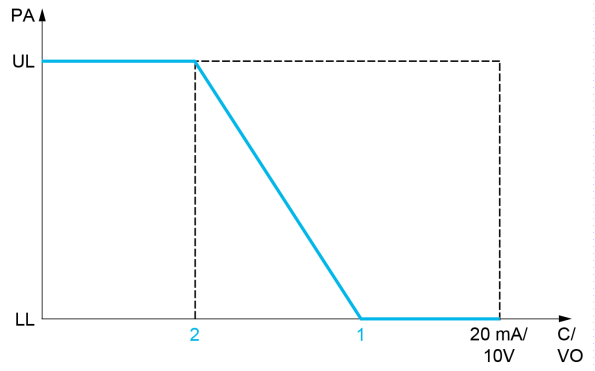

PA Parameter assigned
C / VO Current or voltage output
UL Upper limit
LL Lower limit
1 **[Min Output]** AOLX or UOLX
2 **[Max Output]** AOHX or UOHX

Scaling of the Assigned Parameter

The scale of the assigned parameter can be adapted in accordance with the requirements by modifying the values of the lower and upper limits with two parameters for each analog output.

These parameters are given in %. 100% corresponds to the total variation range of the configured parameter, so: 100% = upper limit - lower limit.

For example, **[Sign. torque]** SIG which varies between –3 and +3 times the rated torque, 100% corresponds to 6 times the rated torque.

- The **[Scaling AQx min]** ASLX parameter modifies the lower limit: new value = lower limit + (range x ASLX). The value 0% (factory setting) does not modify the lower limit.
- The **[Scaling AQx max]** ASHX) parameter modifies the upper limit: new value = lower limit + (range x ASLX). The value 100% (factory setting) does not modify the upper limit.
- **[Scaling AQx min]** ASLX must always be lower than **[Scaling AQx max]** ASHX.

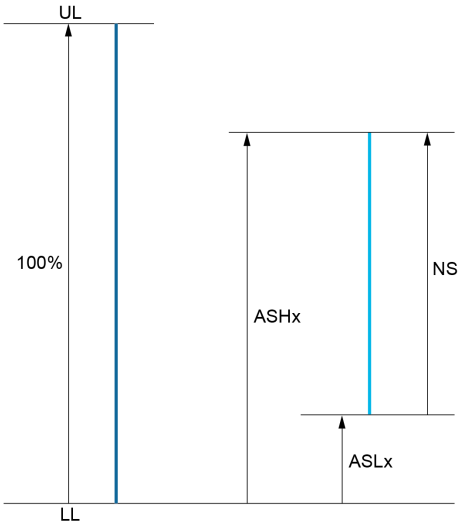

UL Upper limit of the assigned parameter
LL Lower limit of the assigned parameter
NS New scale
1 ASHX
2 ASLX

Application Example

The value of the motor current at the AQ1 output is to be transferred with 0...20 mA, range 2 in motor, In motor being the equivalent of a 0.8 In drive.

- The **[Motor Current]** oCr parameter varies from 0 to 2 times the rated drive current.
- **[Scaling AQ1 min]** ASLI must not modify the lower limit, which therefore remains at its factory setting of 0%.
- **[Scaling AQ1 max]** ASHI must modify the upper limit by 0.5x the rated motor torque, or 100 - 100/5 = 80% (new value = lower limit + (range x **[Scaling AQ1 max]** ASHI).

[AQ1 Assignment] AoI

AQ1 assignment.

Setting	Code / Value	Description
[Not Configured]	nO	Not assigned
[Motor Current]	oCr	Current in the motor, from 0 to 2 In (In = rated drive current indicated in the Installation manual and on the drive nameplate)
[Motor Frequency]	oFr	Output frequency, from 0 to **[Max Frequency]** tFr **Factory Setting**
[Ramp out.]	orP	From 0 to **[Max Frequency]** tFr
[Motor torq.]	trq	Motor torque, from 0 to 3 times the rated motor torque
[Sign. torque]	Stq	Signed motor torque, between –3 and +3 times the rated motor torque. The + sign corresponds to the motor mode and the – sign to the generator mode (braking).
[sign ramp]	orS	Signed ramp output, between –**[Max Frequency]** tFr and +**[Max Frequency]** tFr
[PID ref.]	oPS	PID controller reference between **[Min PID reference]** PIP1 and **[Max PID reference]** PIP2
[PID feedbk]	oPF	PID controller feedback between **[Min PID feedback]** PIF1 and **[Max PID feedback]** PIF2
[PID error]	oPE	PID controller detected error between –5% and +5% of **[Max PID feedback]** PIF2 – **[Min PID feedback]** PIF1
[PID output]	oPI	PID controller output between **[Low speed]** LSP and **[High speed]** HSP
[Motor power]	oPr	Motor power, between 0 and 2.5 times **[Nominal Motor Power]** nPr
[Mot thermal]	tHr	Motor thermal state, from 0 to 200% of the rated thermal state

Setting	Code / Value	Description
[Drv thermal]	tHd	Drive thermal state, from 0 to 200% of the rated thermal state
[Sig. o/p frq.]	oFS	Signed output frequency, between –**[Max Frequency]** tFr and +**[Max Frequency]** tFr
[Motor volt.]	uoP	Voltage applied to the motor, between 0 and **[Nom Motor Voltage]** unS
[Inlet Pressure Value]	PS1u	Inlet pressure value
[Outlet Pressure Value]	PS2u	Outlet pressure value
[Installation Flow]	FS1u	Installation flow value

[AQ1 Type] AoIt

AQ1 type.

Setting	Code / Value	Description
[Voltage]	10u	0-10 Vdc
[Current]	0A	0-20 mA **Factory setting**

[AQ1 min output] AoL 1★

AQ1 current scaling parameter of 0%.

This parameter can be accessed if **[AQ1 Type]** AoIt is set to **[Current]** 0A.

Setting	Description
0.0...20.0 mA	Setting range **Factory setting**: 0.0 mA

[AQ1 max output] AoH 1★

AQ1 current scaling parameter of 100%.

This parameter can be accessed if **[AQ1 Type]** AoIt is set to **[Current]** 0A.

Setting	Description
0.0...20.0 mA	Setting range **Factory setting**: 20.0 mA

[AQ1 min Output] uoL 1★

AQ1 voltage scaling parameter of 0%.

This parameter can be accessed if **[AQ1 Type]** AoIt is set to **[Voltage]** 10u.

Setting	Description
0.0...10.0 Vdc	Setting range **Factory setting**: 0.0 Vdc

[AQ1 max Output] uoH 1★

AQ1 voltage scaling parameter of 100%.

This parameter can be accessed if **[AQ1 Type]** AoIt is set to **[Voltage]** 10u.

Setting	Description
0.0...10.0 Vdc	Setting range **Factory setting**: 10.0 Vdc

[Scaling AQ1 min] *A S L 1*

AQ1 scaling parameter of 0%.

Scaling of the lower limit of the assigned parameter, as a % of the maximum possible variation.

Setting	Description
0.0...100.0%	Setting range **Factory setting**: 0.0%

[Scaling AQ1 max] *A S H 1*

AQ1 scaling parameter of 100%.

Scaling of the upper limit of the assigned parameter, as a % of the maximum possible variation.

Setting	Description
0.0...100.0%	Setting range **Factory setting**: 100.0%

[AQ1 Filter] *A o 1 F*

AQ1 cutoff time of the low-filter.

Setting	Description
0.00...10.00 s	Setting range **Factory setting**: 0.00 s

[AQ2 configuration] AO2 - Menu

Access

[Complete settings] ➡ [Input/Output] ➡ [AI/AQ] ➡ [AQ2 configuration]

[AQ2 assignment] AO2

AQ2 assignment.

Setting	Code / Value	Description
[Not Configured]	nO	Not assigned
[Motor Current]	OCr	Current in the motor, from 0 to 2 In (In = rated drive current indicated in the Installation manual and on the drive nameplate) **Factory Setting**
[Motor Frequency]	OFr	Output frequency, from 0 to [Max Frequency] tFr
[Ramp out.]	orP	From 0 to [Max Frequency] tFr
[Motor torq.]	trq	Motor torque, from 0 to 3 times the rated motor torque
[Sign. torque]	Stq	Signed motor torque, between –3 and +3 times the rated motor torque. The + sign corresponds to the motor mode and the – sign to the generator mode (braking).
[sign ramp]	orS	Signed ramp output, between –[Max Frequency] tFr and +[Max Frequency] tFr
[PID ref.]	OPS	PID controller reference between [Min PID reference] P1P1 and [Max PID reference] P1P2
[PID feedbk]	OPF	PID controller feedback between [Min PID feedback] P1F1 and [Max PID feedback] P1F2
[PID error]	OPE	PID controller detected error between –5% and +5% of [Max PID feedback] P1F2 – [Min PID feedback] P1F1
[PID output]	OP1	PID controller output between [Low speed] LSP and [High speed] HSP
[Motor power]	OPr	Motor power, between 0 and 2.5 times [Nominal Motor Power] nPr
[Mot thermal]	tHr	Motor thermal state, from 0 to 200% of the rated thermal state
[Drv thermal]	tHd	Drive thermal state, from 0 to 200% of the rated thermal state
[Sig. o/p frq.]	OFS	Signed output frequency, between –[Max Frequency] tFr and +[Max Frequency] tFr
[Motor volt.]	UOP	Voltage applied to the motor, between 0 and [Nom Motor Voltage] UnS
[Inlet Pressure Value]	PS1u	Inlet pressure value
[Outlet Pressure Value]	PS2u	Outlet pressure value
[Installation Flow]	FS1u	Installation flow value

[AQ2 Type] AO2t

AQ2 type.

Setting	Code / Value	Description
[Voltage]	10U	0-10 Vdc
[Current]	0A	0-20 mA **Factory setting**

[AQ2 min output] AOL2 ★

AQ2 current scaling parameter of 0%.

This parameter can be accessed if [AQ2 Type] AO2t is set to [Current] 0A.

Identical to [AQ1 min output] AOL1 *(see page 511)*.

[AQ2 max output] AoH2 ★

AQ2 current scaling parameter of 100%.

This parameter can be accessed if **[AQ2 Type]** Ao2t is set to **[Current]** 0A.

Identical to **[AQ1 max output]** AoH1 *(see page 511)*.

[AQ2 min Output] uoL2 ★

AQ2 voltage scaling parameter of 0%.

This parameter can be accessed if **[AQ2 Type]** Ao2t is set to **[Voltage]** 10u.

Identical to **[AQ1 min Output]** uoL1 *(see page 511)*.

[AQ2 max Output] uoH2 ★

AQ2 voltage scaling parameter of 100%.

This parameter can be accessed if **[AQ2 Type]** Ao2t is set to **[Voltage]** 10u.

Identical to **[AQ1 max Output]** uoH1 *(see page 511)*.

[Scaling AQ2 min] AS2L

AQ2 scaling parameter of 0%.

Identical to **[Scaling AQ1 min]** AS1L *(see page 512)*.

[Scaling AQ2 max] AS2H

AQ2 scaling parameter of 100%.

Identical to **[Scaling AQ1 max]** AS1H *(see page 512)*.

[AQ2 Filter] Ao2F

AQ2 cutoff time of the low-filter.

Identical to **[AQ1 Filter]** AoIF *(see page 512)*.

[Virtual AI1] AV1- Menu

Access

[Complete settings] ➞ [Input/Output] ➞ [AI/AQ] ➞ [Virtual AI1]

[AIV1 Assignment] AV1A

Virtual AI1 function assignment.

Setting	Code / Value	Description
[No]	nO	Not assigned
[Ref Frequency 2 Summing]	SA2	Reference frequency 2 summing
[PID Feedback]	PIF	PI controller feedback
[Subtract Ref Freq 2]	dA2	Subtract reference frequency 2
[Ref Frequency 3 Summing]	SA3	Reference frequency 3 summing
[Subtract Ref Freq 3]	dA3	Subtract reference frequency 3
[Ref Frequency 2 multiplier]	MA2	Reference frequency 2 multiplier
[Ref Frequency 3 multiplier]	MA3	Reference frequency 3 multiplier
[InletPres Assign]	PS1A	Select the source of inlet pressure sensor
[OutletPres Assign]	PS2A	Select the source of outlet pressure sensor
[Inst Flow Assign]	FS1A	Select the source of installation flow sensor
[Pump Flow Assign]	FS2A	Select the source of pump flow sensor

[AIV1 Channel Assignment] AIC1

Channel assignment for virtual analog input AIV1.

Setting	Code / Value	Description
[Not Configured]	nO	Not assigned **Factory setting**
[Ref. Freq-Modbus]	Mdb	Reference frequency via Modbus
[Ref. Freq-CANopen]	CAn	Reference frequency via CANopen if a CANopen module has been inserted
[Ref. Freq-Com. Module]	nEt	Reference frequency via fieldbus module if a fieldbus module has been inserted
[Embedded Ethernet]	EtH	Embedded Ethernet

[AIV1 Type] AV1t

Configuration of virtual analog input AIV1.

Setting	Code / Value	Description
[[+/-8192]	InEG	-8192/+8192 **Factory setting**
[+/-100%]]	PnEG	-100.00/+100.00 %

[Virtual AI2] AU2 - Menu

Access

[Complete settings] ➞ [Input/Output] ➞ [AI/AQ] ➞ [Virtual AI2]

About This Menu

Identical to **[Virtual AI1] AU1 -** menu. *(see page 515)*

[AIV2 Assignment] AV2A

Virtual AI2 function assignment.

[AIV2 Channel Assign] AIC2

Channel assignment for virtual analog input AIV2.

[AIV2 Type] AV2T

Configuration of virtual analog input AIV2.

[Virtual AI3] AU3 - Menu

Access

[Complete settings] ➞ [Input/Output] ➞ [AI/AQ] ➞ [Virtual AI3]

About This Menu

Identical to **[Virtual AI1] AU1 -** menu. *(see page 515)*

[AIV3 Assignment] AV3A

Virtual AI3 function assignment.

[AIV3 Channel Assign] AIC3

Channel assignment for virtual analog input AIV3.

[AIV3 Type] AV3T

Configuration of virtual analog input AIV3.

Section 8.56
[Input/Output] - [Relay]

What Is in This Section?

This section contains the following topics:

Topic	Page
[R1 configuration] r 1 - Menu	518
[R2 configuration] r 2 - Menu	520
[R3 configuration] r 3 - Menu	521
[R4 configuration] r 4 - Menu	521
[R5 configuration] r 5 - Menu	522
[R6 configuration] r 6 - Menu	522
[R60 configuration] r 60 - Menu	523
[R61 configuration] r 61 - Menu	523
[R62 configuration] r 62 - Menu	524
[R63 configuration] r 63 - Menu	524
[R64 configuration] r 64 - Menu	525
[R65 configuration] r 65 - Menu	525
[R66 configuration] r 66 - Menu	526
[Input/Output] io - Menu	527

[R1 configuration] r 1 - Menu

Access

[Complete settings] ➡ [Input/Output] ➡ [Relay] ➡ [R1 configuration]

[R1 Assignment] r 1

R1 assignment.

Setting	Code / Value	Description
[No]	nO	Not assigned
[Operating State Fault]	FLt	Operating state fault **Factory setting**
[Drive Running]	run	Drive running
[Mot Freq High Thd]	FtA	Motor frequency threshold (**[Motor Freq Thd]** Ftd) reached
[High Speed Reached]	FLA	High speed reached
[Current Thd Reached]	CtA	Motor current threshold (**[High Current Thd]** Ctd) reached
[Ref Freq Reached]	SrA	Frequency reference reached
[Motor Therm Thd Reached]	tSA	Motor thermal threshold (**[Motor Therm Thd]** ttd) reached
[PID Error Warning]	PEE	PID error warning
[PID Feedback Warning]	PFA	PID feedback warning
[AI2 4-20 Loss Warning]	AP2	AI2 4-20 mA loss warning
[Mot Freq High Thd 2]	F2A	Second frequency threshold (**[Freq. threshold 2]** F2d) reached
[Drv Therm Thd Reached]	tAd	Drive thermal threshold reached
[Ref Freq High Thd Reached]	rtAH	Frequency reference high threshold reached
[Ref Freq Low Thd Reached]	rtAL	Frequency reference low threshold reached
[Mot Freq Low Thd]	FtAL	Frequency low threshold (**[Low Freq.Threshold]** FtdL) reached
[Motor Freq Low Thd 2]	F2AL	Second frequency low threshold (**[2 Freq. Threshold]** F2dL) reached
[Low Current Reached]	CtAL	Current low threshold (**[Low I Threshold]** CtdL) reached
[Process Undld Warning]	uLA	Underload warning
[Process Overload Warning]	oLA	Overload warning
[Forward]	MFrd	Run forward
[Reverse]	MrrS	Run reverse
[HMI Cmd]	bMP	Control via the Graphic Display Terminal is active. (only active with Local/Remote button)
[Neg Torque]	AtS	Actual torque sign
[Cnfg.0 act.]	CnF0	Configuration 0 active
[set 1 active]	CFP1	Parameter set 1 active
[set 2 active]	CFP2	Parameter set 2 active
[set 3 active]	CFP3	Parameter set 3 active
[DC Bus Charged]	dbL	DC bus charged
[In braking]	brS	In braking sequence
[Power removal state]	PrM	Power removal state. Without power supply, the information cannot be delivered. With this setting value, the power supply must be not external.
[I present]	MCP	Motor current present
[Warning Grp 1]	AG1	Warning group 1
[Warning Grp 2]	AG2	Warning group 2
[Warning Grp 3]	AG3	Warning group 3
[Warning Grp 4]	AG4	Warning group 4
[Warning Grp 5]	AG5	Warning group 5
[External Error Warning]	EFA	External error warning

Setting	Code / Value	Description
[Undervoltage Warning]	uSA	Undervoltage warning
[Preventive UnderV Active]	uPA	Undervoltage prevention warning
[Drive Thermal Warning]	tHA	Drive thermal state warning
[IGBT Thermal Warning]	tJA	Thermal junction warning
[DBR Active]	brAS	DBR Active
[AI3 4-20 Loss Warning]	AP3	AI3 4-20 mA loss warning
[Ready]	rdY	Ready to start
[AI1 4-20 Loss Warning]	AP1	AI1 4-20 mA loss warning
[Pump 1 Cmd]	MPo1	Pump 1 command
[Temp Sens AI2 Warn]	tS2A	Temperature sensor AI2 warning (open circuit)
[Temp Sens AI3 Warn]	tS3A	Temperature sensor AI3 warning (open circuit)
[Temp Sens AI4 Warn]	tS4A	Temperature sensor AI4 warning (open circuit)
[Temp Sens AI5 Warn]	tS5A	Temperature sensor AI5 warning (open circuit)

[R1 Delay time] r1d

R1 activation delay time.

The state modification takes effect once the configured time has elapsed when the information becomes true.

The delay cannot be set for the **[Operating State Fault]** FLt assignment; and remains at 0.

Setting	Description
0...60,000 ms	Setting range **Factory setting**: 0 ms

[R1 Active at] r1S

R1 status (output active level).

Setting	Code / Value	Description
1	PoS	State 1 when the information is true **Factory setting**
0	nEG	State 0 when the information is true

Configuration **[1]** PoS cannot be modified for the **[Operating State "Fault"]** FLt assignment.

[R1 Holding time] r1H

R1 holding delay time.

The state modification takes effect once the configured time has elapsed when the information becomes false.

The holding time cannot be set for the **[Operating State "Fault"]** FLt assignment, and remains at 0.

Setting	Description
0...9,999 ms	Setting range **Factory setting**: 0 ms

[R2 configuration] r 2 - Menu

Access

[Complete settings] ➡ [Input/Output] ➡ [Relay] ➡ [R2 configuration]

About This Menu

Identical to **[R1 configuration] r 1 -** Menu *(see page 518)*.

[R2 Assignment] r 2

R2 assignment.

Identical to **[R1 Assignment] r 1** *(see page 518)* in addition to:

Setting	Code / Value	Description
[No]	n o	Not assigned **Factory setting**
[Mains Contactor]	L L C	Mains contactor control
[DC charging]	d C o	DC charging
[M/S Device Warn]	M S d A	M/S device warning
[Jockey]	J o K Y	Jockey
[Priming]	P r i M	Priming
[Pump 1 Cmd]	M P o 1	Pump 1 command
[Pump 2 Cmd]	M P o 2	Pump 2 command
[Pump 3 Cmd]	M P o 3	Pump 3 command
[Pump 4 Cmd]	M P o 4	Pump 4 command
[Pump 5 Cmd]	M P o 5	Pump 5 command
[Pump 6 Cmd]	M P o 6	Pump 6 command
[CB Start Pulse]	C b E P	Circuit Breaker start pulse.
[CB Stop Pulse]	C b d P	Circuit Breaker stop pulse.
[Output cont]	o C C	Output contactor control.

[R2 Delay time] r 2 d

R2 activation delay time.

[R2 Active at] r 2 S

R2 status (output active level).

[R2 Holding time] r 2 H

R2 holding delay time.

[R3 configuration] r 3 - Menu

Access

[Complete settings] ➞ [Input/Output] ➞ [Relay] ➞ [R3 configuration]

About This Menu

Identical to **[R1 configuration]** r 1 - Menu *(see page 518)*.

[R3 Assignment] r 3

R3 assignment.

Identical to **[R2 Assignment]** r 2 *(see page 520)*.

[R3 Delay time] r 3 d

R3 activation delay time.

[R3 Active at] r 3 S

R3 status (output active level).

[R3 Holding time] r 3 H

R3 holding delay time.

[R4 configuration] r 4 - Menu

Access

[Complete settings] ➞ [Input/Output] ➞ [Relay] ➞ [R4 configuration]

About This Menu

Identical to **[R1 configuration]** r 1 - Menu *(see page 518)*.

Following parameters can be accessed if VW3A3204 relay output option module has been inserted.

[R4 Assignment] r 4 ★

R4 assignment.

Identical to **[R2 Assignment]** r 2 *(see page 520)*.

[R4 Delay time] r 4 d ★

R4 activation delay time.

[R4 Active at] r 4 S ★

R4 status (output active level).

[R4 Holding time] r 4 H ★

R4 holding delay time.

[R5 configuration] r 5 - Menu

Access

[Complete settings] ➡ [Input/Output] ➡ [Relay] ➡ [R5 configuration]

About This Menu

Identical to **[R1 configuration] r 1 -** Menu *(see page 518)*.

Following parameters can be accessed if VW3A3204 relay output option module has been inserted.

[R5 Assignment] r 5 ★

R5 assignment.

Identical to **[R2 Assignment] r 2** *(see page 520)*.

[R5 Delay time] r 5 d ★

R5 activation delay time.

[R5 Active at] r 5 5 ★

R5 status (output active level).

[R5 Holding time] r 5 H ★

R5 holding delay time.

[R6 configuration] r 6 - Menu

Access

[Complete settings] ➡ [Input/Output] ➡ [Relay] ➡ [R6 configuration]

About This Menu

Identical to **[R1 configuration] r 1 -** Menu *(see page 518)*.

Following parameters can be accessed if VW3A3204 relay output option module has been inserted.

[R6 Assignment] r 6 ★

R6 assignment.

Identical to **[R2 Assignment] r 2** *(see page 520)*.

[R6 Delay time] r 6 d ★

R6 activation delay time.

[R6 Active at] r 6 5 ★

R6 status (output active level).

[R6 Holding time] r 6 H ★

R6 holding delay time.

[R60 configuration] r 6 0 - Menu

Access

[Complete settings] ➡ **[Input/Output]** ➡ **[Relay]** ➡ **[R60 configuration]**

About This Menu

Identical to **[R2 configuration]** r 2 - Menu *(see page 520)*.

Following parameters can be accessed on ATV660 or ATV680, equipped with cabinet IO, and if **[Access Level]** L A C is set to **[Expert]** E P r .

NOTE: R60 up to R66 Relays are used inside the Drive Systems enclosure for control and monitoring circuits.

[R60 Assignment] r 6 0

R60 assignment.

[R60 Delay time] r 6 0 d

R60 activation delay time.

[R60 Active at] r 6 0 S

R60 status (output active level).

[R60 Holding time] r 6 0 H

R60 holding delay time.

[R61 configuration] r 6 1 - Menu

Access

[Complete settings] ➡ **[Input/Output]** ➡ **[Relay]** ➡ **[R61 configuration]**

About This Menu

Identical to **[R2 configuration]** r 2 - Menu *(see page 520)*.

Following parameters can be accessed on ATV660 or ATV680, equipped with cabinet IO, and if **[Access Level]** L A C is set to **[Expert]** E P r .

NOTE: R60 up to R66 Relays are used inside the Drive Systems enclosure for control and monitoring circuits.

[R61 Assignment] r 6 1

R61 assignment.

[R61 Delay time] r 6 1 d

R61 activation delay time.

[R61 Active at] r 6 1 S

R61 status (output active level).

[R61 Holding time] r 6 1 H

R61 holding delay time.

[R62 configuration] r 6 2 - Menu

Access

[Complete settings] ➡ [Input/Output] ➡ [Relay] ➡ [R62 configuration]

About This Menu

Identical to **[R2 configuration] r 2 -** Menu *(see page 520)*.

Following parameters can be accessed on ATV660 or ATV680, equipped with cabinet IO, and if **[Access Level] L A C** is set to **[Expert] E P r** .

NOTE: R60 up to R66 Relays are used inside the Drive Systems enclosure for control and monitoring circuits.

[R62 Assignment] r 6 2

R62 assignment.

[R62 Delay time] r 6 2 d

R62 activation delay time.

[R62 Active at] r 6 2 S

R62 status (output active level).

[R62 Holding time] r 6 2 H

R62 holding delay time.

[R63 configuration] r 6 3 - Menu

Access

[Complete settings] ➡ [Input/Output] ➡ [Relay] ➡ [R63 configuration]

About This Menu

Identical to **[R2 configuration] r 2 -** Menu *(see page 520)*.

Following parameters can be accessed on ATV660 or ATV680, equipped with cabinet IO, and if **[Access Level] L A C** is set to **[Expert] E P r** .

NOTE: R60 up to R66 Relays are used inside the Drive Systems enclosure for control and monitoring circuits.

[R63 Assignment] r 6 3

R63 assignment.

[R63 Delay time] r 6 3 d

R63 activation delay time.

[R63 Active at] r 6 3 S

R63 status (output active level).

[R63 Holding time] r 6 3 H

R63 holding delay time.

[R64 configuration] r 6 4 - Menu

Access

[Complete settings] ➡ **[Input/Output]** ➡ **[Relay]** ➡ **[R64 configuration]**

About This Menu

Identical to **[R2 configuration]** r 2 - Menu *(see page 520)*.

Following parameters can be accessed on ATV660 or ATV680, equipped with cabinet IO, and if **[Access Level]** L A C is set to **[Expert]** E P r .

NOTE: R60 up to R66 Relays are used inside the Drive Systems enclosure for control and monitoring circuits.

[R64 Assignment] r 6 4

R64 assignment.

[R64 Delay time] r 6 4 d

R64 activation delay time.

[R64 Active at] r 6 4 S

R64 status (output active level).

[R64 Holding time] r 6 4 H

R64 holding delay time.

[R65 configuration] r 6 5 - Menu

Access

[Complete settings] ➡ **[Input/Output]** ➡ **[Relay]** ➡ **[R65 configuration]**

About This Menu

Identical to **[R2 configuration]** r 2 - Menu *(see page 520)*.

Following parameters can be accessed on ATV660 or ATV680, equipped with cabinet IO, and if **[Access Level]** L A C is set to **[Expert]** E P r .

NOTE: R60 up to R66 Relays are used inside the Drive Systems enclosure for control and monitoring circuits.

[R65 Assignment] r 6 5

R65 assignment.

[R65 Delay time] r 6 5 d

R65 activation delay time.

[R65 Active at] r 6 5 S

R65 status (output active level).

[R65 Holding time] r 6 5 H

R65 holding delay time.

[R66 configuration] r 6 6 - Menu

Access

[Complete settings] ➡ **[Input/Output]** ➡ **[Relay]** ➡ **[R66 configuration]**

About This Menu

Identical to **[R2 configuration]** r 2 - Menu *(see page 520)*.

Following parameters can be accessed on ATV660 or ATV680, equipped with cabinet IO, and if **[Access Level]** L A C is set to **[Expert]** E P r .

NOTE: R60 up to R66 Relays are used inside the Drive Systems enclosure for control and monitoring circuits.

[R66 Assignment] r 6 6

R66 assignment.

[R66 Delay time] r 6 6 d

R66 activation delay time.

[R66 Active at] r 6 6 S

R66 status (output active level).

[R66 Holding time] r 6 6 H

R66 holding delay time.

[Input/Output] I O - Menu

Access

[Complete settings] ➡ [Input/Output]

[Ref Freq Template] b S P

Reference frequency template selection.

This parameter defines how the speed reference is taken into account, for analog inputs and pulse input. In the case of the PID controller, this is the PID output reference.

The limits are set by the **[Low speed]** L S P and **[High speed]** H S P parameters

Setting	Code / Value	Description
[Standard]	b S d	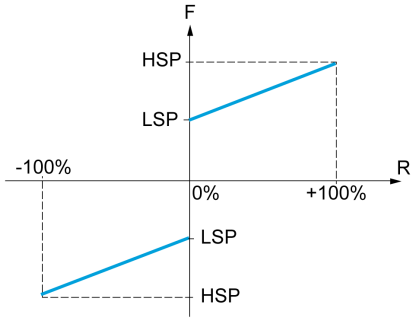 **F** Frequency **R** Reference At reference = 0, the frequency = **[Low speed]** L S P **Factory setting**
[Pedestal]	b L S	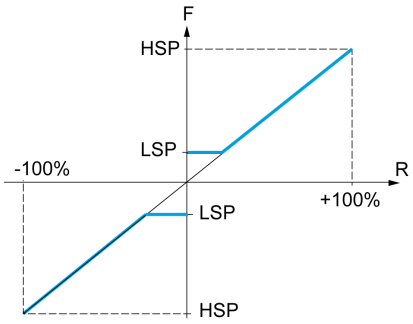 **F** Frequency **R** Reference At reference = 0 to **[Low speed]** L S P, the frequency = **[Low speed]** L S P
[Deadband]	b n S	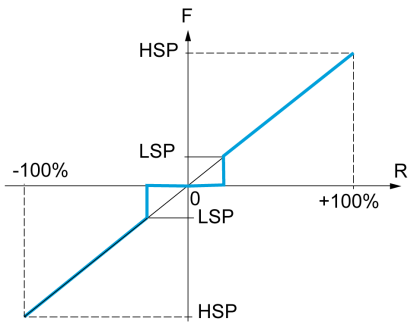 **F** Frequency **R** Reference At reference = 0 to **[Low speed]** L S P the frequency = 0

Setting	Code / Value	Description
[Deadband at 0%]	bn50	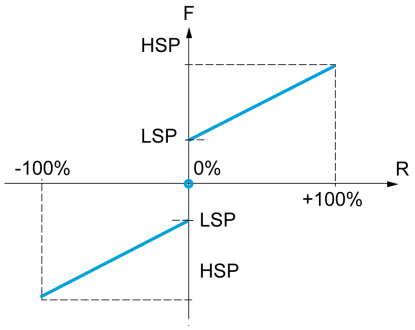 **F** Frequency **R** Reference This operation is the same as **[Standard]** bSd, except that in the following cases at zero reference, the frequency = 0: The signal is less than **[Min nvalue]**, which is greater than 0 (example: 1 Vdc on a 2–10 Vdc input) The signal is greater than **[Min nvalue]**, which is greater than **[Max value]** (example: 11 Vdc on a 10–0 Vdc input). If the input range is configured as “bidirectional”, operation remains identical to **[Standard]** bSd.

Section 8.57
[Error/Warning handling]

What Is in This Section?

This section contains the following topics:

Topic	Page
[Auto fault reset] Atr - Menu	530
[Fault reset] rSt - Menu	531
[Catch on the fly] FLr - Menu	533
[Error detection disable] inH - Menu	535
[External error] EtF - Menu	538
[Output phase loss] oPL - Menu	540
[Input phase loss] iPL - Menu	541
[4-20mA loss] LFL - Menu	542
[Fallback speed] LFF - Menu	544
[Fieldbus monitoring] CLL - Menu	545
[Embedded Modbus TCP] EMtC - Menu	546
[Communication module] CoMo - Menu	547
[Undervoltage handling] uSb - Menu	549
[Ground Fault] GrFL - Menu	551
[Motor thermal monit] tHt - Menu	552
[Drive overload monit] obr - Menu	554
[Warn grp 1 definition] A1C - Menu	555
[Warn grp 2 definition] A2C - Menu	558
[Warn grp 3 definition] A3C - Menu	558
[Warn grp 4 definition] A4C - Menu	558
[Warn grp 5 definition] A5C - Menu	558

[Auto fault reset] Atr - Menu

Access

[Complete settings] ➡ [Error/Warning handling] ➡ [Auto fault reset]

[Auto Fault Reset] Atr

Automatic fault reset.

This function can be used to automatically perform individual or multiple Fault Resets. If the cause of the error that has triggered the transition to the operating state Fault disappears while this function is active, the drive resumes normal operation. While the Fault Reset attempts are performed automatically, the output signal **[Operating state Fault]** is not available. If the attempts to perform the Fault Reset are not successful, the drive remains in the operating state Fault and the output signal **[Operating state Fault]** becomes active.

⚠ WARNING

UNANTICIPATED EQUIPMENT OPERATION

- Verify that activating this function does not result in unsafe conditions.
- Verify that the fact that the output signal "Operating state Fault" is not available while this function is active does not result in unsafe conditions.

Failure to follow these instructions can result in death, serious injury, or equipment damage.

The drive fault relay remains activated if this function is active. The speed reference and the operating direction must be maintained.

It is recommended to use 2-wire control (**[2/3-wire control]** tCC is set to **[2 wire]** 2C and **[2-wire type]** tCt is set to **[Level]** LEL, refer to **[2/3-wire control]** tCC.

If the restart has not taken place once the configurable time **[Fault Reset Time]** tAr has elapsed, the procedure is aborted and the response to external error. remains locked until it is turned off and then on again.

The detected error codes, which permit this function, are listed in the Diagnostics part of the manual.

Setting	Code / Value	Description
[No]	no	Function inactive **Factory setting**
[Yes]	YES	Automatic restart, after locking in error state, if the detected error has disappeared and the other operating conditions permit the restart. The restart is performed by a series of automatic attempts separated by increasingly longer waiting periods: 1 s, 5 s, 10 s, then 1 minute for the following attempts.

[Fault Reset Time] tAr ★

Maximum time for automatic restart function.

This parameter appears if **[Auto Fault Reset]** Atr is set to **[Yes]** YES. It can be used to limit the number of consecutive restarts on a recurrent detected error.

Setting	Code / Value	Description
[5 minutes]	5	5 minutes **Factory setting**
[10 minutes]	10	10 minutes
[30 minutes]	30	30 minutes
[1 hour]	1h	1 hour
[2 hours]	2h	2 hours
[3 hours]	3h	3 hours
[Unlimited]	Ct	Continuous

[Fault reset] r 5 t - Menu

Access

[Complete settings] ➞ [Error/Warning handling] ➞ [Fault reset]

[Fault Reset Assign] r 5 F

Fault reset input assignment.

Detected errors are cleared manually when the assigned input or bit changes to 1 if the cause of the detected error has disappeared.

The **STOP/RESET** key on the Graphic Display Terminal performs the same function.

Setting	Code / Value	Description
[Not Assigned]	n o	Not assigned **Factory setting**
[DI1]...[DI6]	L I 1...L I 6	Digital input DI1...DI6
[DI11]...[DI16]	L I 1 1...L I 1 6	Digital input DI11...DI16 if VW3A3203 I/O extension module has been inserted
[DI52 (High level)]...[DI59 (High level)]	d 5 2 H...d 5 9 H	Cabinet high level digital inputs **NOTE:** This selection can be accessed on ATV960, ATV980 equipped withCabinet IO.
[C201]...[C210]	C 2 0 1...C 2 1 0	Virtual digital input CMD2.01...CMD2.10 with CANopen® fieldbus module in [I/O profile] I o configuration
[C211]...[C215]	C 2 1 1...C 2 1 5	Virtual digital input CMD2.11...CMD2.15 with CANopen® fieldbus module regardless of configuration
[C501]...[C510]	C 5 0 1...C 5 1 0	Virtual digital input CMD5.01...CMD5.10 with integrated Ethernet in [I/O profile] I o configuration
[C511]...[C515]	C 5 1 1...C 5 1 5	Virtual digital input CMD5.11...CMD5.15 with integrated Ethernet regardless of configuration

[Product Restart] r P ★

The Restart function performs a Fault Reset and then restarts the drive. During this Restart procedure, the drive goes through the same steps as if it had been switched off and on again. Depending on the wiring and the configuration of the drive, this may result in immediate and unanticipated operation.

⚠ WARNING

UNANTICIPATED EQUIPMENT OPERATION

The Restart function performs a Fault Reset and restarts the drive

- Verify that activating this function does not result in unsafe conditions.

Failure to follow these instructions can result in death, serious injury, or equipment damage.

Product restart.

This parameter can be accessed if [Access Level] L A C is set to [Expert] E P r mode.

This parameter can be used to reset all detected errors without having to disconnect the drive from the supply mains.

Setting	Code / Value	Description
[No]	n o	Function inactive **Factory setting**
[Yes]	y E 5	Reinitialization. Press and hold down the OK key for 2 s. The parameter changes back to [No] n o automatically as soon as the operation is complete. The drive can only be reinitialized when locked.

[Prod Restart Assign] r P A ★

Product restart assignment.

The Restart function performs a Fault Reset and then restarts the drive. During this Restart procedure, the drive goes through the same steps as if it had been switched off and on again. Depending on the wiring and the configuration of the drive, this may result in immediate and unanticipated operation. The Restart function can be assigned to a digital input

⚠ WARNING

UNANTICIPATED EQUIPMENT OPERATION

The Restart function performs a Fault Reset and restarts the drive

- Verify that activating this function does not result in unsafe conditions.

Failure to follow these instructions can result in death, serious injury, or equipment damage.

This parameter can be accessed if **[Access Level]** *LAC* is set to **[Expert]** *EPr* mode.

Setting	Code / Value	Description
[Not Assigned]	*nO*	Not assigned **Factory setting**
[DI1]...**[DI6]**	*LI1*...*LI6*	Digital input DI1...DI6
[DI11]...**[DI16]**	*LI11*...*LI16*	Digital input DI11...DI16 if VW3A3203 I/O extension module has been inserted
[DI52 (High level)]... **[DI59 (High level)]**	*d52H*...*d59H*	Cabinet high level assignment digital inputs **NOTE:** This selection can be accessed on ATV660 and ATV680 equipped with Cabinet IO.

[Catch on the fly] FLr - Menu

Access

[Complete settings] ➞ [Error/Warning handling] ➞ [Catch on the fly]

[Catch On Fly] FLr

Catch on the fly.

Used to enable a smooth restart if the run command is maintained after the following events:
- Loss of line supply or disconnection.
- Clearing clearance of current detected error or automatic restart.
- Freewheel stop.

The speed given by the drive resumes from the estimated or measured speed of the motor at the time of the restart, then follows the ramp to the reference speed.

This function requires 2-wire level control.

When the function is operational, it activates at each run command, resulting in a slight delay of the current (0.5 s max).

[Catch On Fly] FLr is forced to **[No]** nO if **[Auto DC Injection]** AdC is set to **[Continuous]** Ct.

Setting	Code / Value	Description
[Not Configured]	nO	Function inactive. **Factory setting**
[Yes On Freewheel]	YES	Function active only after freewheel stop.
[Yes Always]	ALL	Function active after all stop type

NOTE: For synchronous reluctant motor, it is recommended to set **[Angle Setting Type]** ASt to **[Rotational Current Injection]** rC I.

[Catch on Fly Sensitivity] VCb ★

Catch on fly sensitivity.

This parameter can only be accessed if **[Access Level]** LAC is set to **[Expert]** EPr.

Setting the value of parameter **[Catch on Fly Sensitivity]** VCb too low may cause a wrong estimation of the speed of the motor.

⚠ WARNING

LOSS OF CONTROL

- Only reduce gradually the value of parameter **[Catch on Fly Sensitivity]** VCb.
- During commissioning, verify that the drive and the system operate as intended by performing tests and simulations in a controlled environment under controlled conditions

Failure to follow these instructions can result in death, serious injury, or equipment damage.

Setting	Description
0.10...100.00 V	Setting range **Factory setting**: 0.20 V

[Catch On Fly Mode] CoFM

Velocity detection method for the Catch on Fly function.

[Catch On Fly Mode] CoFM is forced to **[Measured]** HWCoF for synchronous motors.

Setting	Code / Value	Description
[Measured]	HWCoF	Hardware catch on the fly The motor voltage signal should be greater than **[Catch on Fly Sensitivity]** VCb to be able to estimate the speed. **Factory setting**
[Computed]	SWCoF	Software catch on the fly A signal is injected to estimate the speed and the position of the rotor. **[Computed]** SWcoF method is not effective for a motor velocity range exceeding -HSP or +HSP.

[Error detection disable] inH - Menu

Access

[Complete settings] ➜ **[Error/Warning handling]** ➜ **[Error detection disable]**

[ErrorDetect Disabled] inH ★

Disable error detection.

In rare cases, the monitoring functions of the drive may be unwanted because they impede the purpose of the application. A typical example is a smoke extractor fan operating as a part of a fire protection system. If a fire occurs, the smoke extractor fan should operate as long as possible, even if, for example, the permissible ambient temperature of the drive is exceeded. In such applications, damage to or destruction of the device may be acceptable as collateral damage, for example, to keep other damage from occurring whose hazard potential is assessed to be more severe.

A parameter is provided to disable certain monitoring functions in such applications so that automatic error detection and automatic error responses of the device are no longer active. You must implement alternative monitoring functions for disabled monitoring functions that allow operators and/or master control systems to adequately respond to conditions which correspond to detected errors. For example, if overtemperature monitoring of the drive is disabled, the drive of a smoke extractor fan may itself cause a fire if errors go undetected. An overtemperature condition can be, for example, signaled in a control room without the drive being stopped immediately and automatically by its internal monitoring functions.

⚠ DANGER

MONITORING FUNCTIONS DISABLED, NO ERROR DETECTION

- Only use this parameter after a thorough risk assessment in compliance with all regulations and standards that apply to the device and to the application.
- Implement alternative monitoring functions for disabled monitoring functions that do not trigger automatic error responses of the drive, but allow for adequate, equivalent responses by other means in compliance with all applicable regulations and standards as well as the risk assessment.
- Commission and test the system with the monitoring functions enabled.
- During commissioning, verify that the drive and the system operate as intended by performing tests and simulations in a controlled environment under controlled conditions.

Failure to follow these instructions will result in death or serious injury.

This parameter can be accessed if **[Access Level]** LAC is set to **[Expert]** EPr.

If the assigned input or bit state is:
- 0: error detection is enabled.
- 1: error detection is disabled.

Current errors are cleared on a rising edge from 0 to 1 of the assigned input or bit.

Detection of following errors can be disabled: AnF, bOF, CnF, COF, dLF, EnF, EPF1, EPF2, FCF2, ETHF, InFA, InFB, InFV, LFF1, LFF3, ObF, OHF, OLC, OLF, OPF1, OPF2, OSF, PHF, SLF1, SLF2, SLF3, SOF, SPF, SSF, TFd, TJF, TnF, ULF, USF.

Setting	Code / Value	Description
[Not Assigned]	no	Not assigned **Factory setting**
[DI1]...**[DI6]**	LI1...LI6	Digital input DI1...DI6
[DI11]...**[DI16]**	LI11...LI16	Digital input DI11...DI16 if VW3A3203 I/O extension module has been inserted
[CD00]...**[CD10]**	CD00...CD10	Virtual digital input CMD.0...CMD.10 in **[I/O profile]** IO configuration
[CD11]...**[CD15]**	CD11...CD15	Virtual digital input CMD.11...CMD.15 regardless of configuration
[C101]...**[C110]**	C101...C110	Virtual digital input CMD1.01...CMD1.10 with integrated Modbus Serial in **[I/O profile]** IO configuration
[C111]...**[C115]**	C111...C115	Virtual digital input CMD1.11...CMD1.15 with integrated Modbus Serial regardless of configuration
[C201]...**[C210]**	C201...C210	Virtual digital input CMD2.01...CMD2.10 with CANopen® fieldbus module in **[I/O profile]** IO configuration

Setting	Code / Value	Description
[C211]...[C215]	C211...C215	Virtual digital input CMD2.11...CMD2.15 with CANopen® fieldbus module regardless of configuration
[C301]...[C310]	C301...C310	Virtual digital input CMD3.01...CMD3.10 with a fieldbus module in [I/O profile] IO configuration
[C311]...[C315]	C311...C315	Virtual digital input CMD3.11...CMD3.15 with a fieldbus module regardless of configuration
[C501]...[C510]	C501...C510	Virtual digital input CMD5.01...CMD5.10 with integrated Ethernet in [I/O profile] IO configuration
[C511]...[C515]	C511...C515	Virtual digital input CMD5.11...CMD5.15 with integrated Ethernet regardless of configuration

[Forced Run] InH5 ★

Disable error detection on run order.

In rare cases, the monitoring functions of the drive may be unwanted because they impede the purpose of the application. In addition, the Run command is to be forced via a digital input. A typical example is a smoke extractor fan operating as a part of a fire protection system. If a fire occurs, the smoke extractor fan should operate as long as possible, even if, for example, the permissible ambient temperature of the drive is exceeded or the wiring is destroyed. In such applications, damage to or destruction of the device may be acceptable as collateral damage, for example, to keep other damage from occurring whose hazard potential is assessed to be more severe.

A parameter is provided to disable certain monitoring functions in such applications so that automatic error detection and automatic error responses of the device are no longer active. You must implement alternative monitoring functions for disabled monitoring functions that allow operators and/or master control systems to adequately respond to conditions which correspond to detected errors. For example, if overtemperature monitoring of the drive is disabled, the drive of a smoke extractor fan may itself cause a fire if errors go undetected. An overtemperature condition can be, for example, signaled in a control room without the drive being stopped immediately and automatically by its internal monitoring functions. In addition, it may not be possible to stop the drive.

⚠ DANGER

MONITORING FUNCTIONS DISABLED, NO ERROR DETECTION, UNANTICIPATED EQUIPMENT OPERATION

- Only use this parameter after a thorough risk assessment in compliance with all regulations and standards that apply to the device and to the application.
- Implement alternative monitoring functions for disabled monitoring functions that do not trigger automatic error responses of the drive, but allow for adequate, equivalent responses by other means in compliance with all applicable regulations and standards as well as the risk assessment.
- Verify that permanently forcing the Run command via a digital input does not result in unsafe conditions.
- Commission and test the system with the monitoring functions enabled.
- During commissioning, verify that the drive and the system operate as intended by performing tests and simulations in a controlled environment under controlled conditions.

Failure to follow these instructions will result in death or serious injury.

Setting	Code / Value	Description
[Disabled]	no	Function inactive **Factory setting**
[Forced Run FW]	Frd	Forced forward run.
[Forced Run RV]	rrS	Forced reverse run.

[Forced Run Ref] inHr ★

Forced Run Reference Frequency.

This parameter can be accessed if **[Forced Run]** inHS is not set to **[Disabled]** no.

This parameter causes the reference to be forced to the configured value when the input or bit for error detection disabled is at 1, with priority over all other references. Value 0 = function inactive. The factory setting changes to 60 Hz if **[Motor Standard]** bFr = **[60 Hz NEMA]** 60.

Setting	Description
0...**[Max Frequency]** tFr	**Factory setting:** 50 Hz

[External error] E Ł F - Menu

Access

[Complete settings] ➡ [Error/Warning handling] ➡ [External error]

[Ext Error Assign] E Ł F

External error assignment.

If the assigned bit state is:
- 0: there is no external error.
- 1: there is an external error

Setting	Code / Value	Description
[Not Assigned]	n o	Not assigned **Factory setting**
[DI1]...**[DI6]**	L I 1...L I 6	Digital input DI1...DI6
[DI11]...**[DI16]**	L I 1 1...L I 16	Digital input DI11...DI16 if VW3A3203 I/O extension module has been inserted
[CD00]...**[CD10]**	C d 0 0...C d 1 0	Virtual digital input CMD.0...CMD.10 in **[I/O profile]** I o configuration
[CD11]...**[CD15]**	C d 1 1...C d 1 5	Virtual digital input CMD.11...CMD.15 regardless of configuration
[C101]...**[C110]**	C 1 0 1...C 1 1 0	Virtual digital input CMD1.01...CMD1.10 with integrated Modbus Serial in **[I/O profile]** I o configuration
[C111]...**[C115]**	C 1 1 1...C 1 1 5	Virtual digital input CMD1.11...CMD1.15 with integrated Modbus Serial regardless of configuration
[C201]...**[C210]**	C 2 0 1...C 2 1 0	Virtual digital input CMD2.01...CMD2.10 with CANopen® fieldbus module in **[I/O profile]** I o configuration
[C211]...**[C215]**	C 2 1 1...C 2 1 5	Virtual digital input CMD2.11...CMD2.15 with CANopen® fieldbus module regardless of configuration
[C301]...**[C310]**	C 3 0 1...C 3 1 0	Virtual digital input CMD3.01...CMD3.10 with a fieldbus module in **[I/O profile]** I o configuration
[C311]...**[C315]**	C 3 1 1...C 3 1 5	Virtual digital input CMD3.11...CMD3.15 with a fieldbus module regardless of configuration
[C501]...**[C510]**	C 5 0 1...C 5 1 0	Virtual digital input CMD5.01...CMD5.10 with integrated Ethernet Modbus TCP in **[I/O profile]** I o configuration
[C511]...**[C515]**	C 5 1 1...C 5 1 5	Virtual digital input CMD5.11...CMD5.15 with integrated Ethernet Modbus TCP regardless of configuration
[DI1 (Low level)]...**[DI6 (Low level)]**	L I L...L 6 L	Digital input DI1...DI6 used at low level
[DI52 (High level)]... **[DI59 (High level)]**	d 5 2 H...d 5 9 H	Cabinet high level digital inputs **NOTE:** This selection can be accessed on ATV660 and ATV680 equipped with Cabinet IO.
[DI52 (Low level)]... **[DI59 (Low level)]**	d 5 2 L...d 5 9 L	Cabinet low level digital inputs **NOTE:** This selection can be accessed on ATV660 and ATV680 equipped with Cabinet IO.

[Ext Error Resp] *E P L*

Drive response to external error.

Type of stop in the event of an external detected error.

Setting	Code / Value	Description
[Ignore]	*n o*	External detected error ignored
[Freewheel Stop]	*y E S*	Freewheel stop **Factory setting**
[Per STT]	*S t t*	Stop according to configuration of **[Type of stop]** *S t t* *(see page 418)*, without tripping. In this case, the detected error relay does not open and the drive is ready to restart as soon as the detected error disappears, according to the restart conditions of the active command channel (for example, according to **[2/3-wire control]** *t C C* and **[2-wire type]** *t C t* *(see page 249)*if control is via the terminals). Configuring a warning for this detected error is recommended (assigned to a digital output, for example) in order to indicate the cause of the stop.
[Fallback speed]	*L F F*	Change to fallback speed, maintained as long as the detected error persists and the run command has not been removed(1)
[Speed maintained]	*r L S*	The drive maintains the speed being applied when the detected error occurred, as long as the detected error is active and the run command has not been removed(1)
[Ramp stop]	*r M P*	Stop on ramp
[Fast stop]	*F S t*	Fast stop
[DC Injection]	*d C ı*	DC injection stop. This type of stop cannot be used with some other functions.
(1) Because, in this case, the detected error does not trigger a stop, it is advisable to assign a relay or digital output to its indication.		

[Output phase loss] oPL - Menu

Access

[Complete settings] ➡ [Error/Warning handling] ➡ [Output phase loss]

[OutPhaseLoss Assign] oPL

Output phase loss assignment.

⚠⚠ DANGER

HAZARD OF ELECTRIC SHOCK, EXPLOSION OR ARC FLASH

If output phase monitoring is disabled, phase loss and, by implication, accidental disconnection of cables, are not detected.

- Verify that the setting of this parameter does not result in unsafe conditions.

Failure to follow these instructions will result in death or serious injury.

NOTE: [OutPhaseLoss Assign] oPL is forced to **[Function Inactive]** nO when **[Motor control type]** Ctt is set to **[SYN_U VC]** SYnU or **[Rel. Mot.]** SrVC.

Setting	Code / Value	Description
[Function Inactive]	nO	Function inactive
[OPF Error Triggered]	YES	Tripping on **[OutPhaseLoss Assign]** oPL with freewheel stop **Factory setting**
[No Error Triggered]	oAC	No detected error triggered, but management of the output voltage in order to avoid an overcurrent when the link with the motor is re-established and catch on the fly performed (even if this function has not been configured).The drive switches to **[Output cut]** SoC state after **[OutPhL Time]** odt time. Catch on fly is possible as soon as the drive is in stand by output cut **[Output cut]** SoC state.

[OutPhaseLoss Delay] odt

Output (motor) phase loss detection time.

Time delay for taking the **[OutPhaseLoss Assign]** oPL detected error into account.

Setting ❮❯	Description
0.5...10 s	Setting range **Factory setting**: 0.5 s

[Input phase loss] iPL - Menu

Access

[Complete settings] ➡ [Error/Warning handling] ➡ [Input phase loss]

[InPhaseLoss Assign] iPL

Loss of input phase error response.

If one supply mains phase is missing and if this leads to performance decrease, an **[Input phase loss]** PHF error is triggered.

If 2 or 3 supply mains phases are missing, the drive operate until an **[Supply Mains UnderV]** USF error is triggered.

Setting	Code / Value	Description
[Ignore]	nO	The input phase loss monitoring function is disabled to be used when the drive is supplied via a single-phase supply or by the DC bus
[Freewheel]	YES	The drive stops in freewheel in case of a supply mains phase loss has been detected

[4-20mA loss] L F L - Menu

Access

[Complete settings] ➡ [Error/Warning handling] ➡ [4-20mA loss]

[AI1 4-20mA Loss] L F L 1

Response to 4-20mA loss on AI1.

Drive behavior on AI1 4-20 event.

Setting	Code / Value	Description
[Ignore]	n o	Detected error ignored. This is the only possible configuration if **[AI1 min. value]** C r L 1 is not greater than 3 mA **Factory setting**
[Freewheel]	y E S	Freewheel stop
[Per STT]	S t t	Stop according to configuration of **[Type of stop]** S t t, without tripping. In this case, the error relay does not open and the drive is ready to restart as soon as the detected error disappears, according to the restart conditions of the active command channel (for example, according to **[2/3-wire control]** t C C and **[2-wire type]** t C t if control is via the terminals). Configuring a warning for this detected error is recommended (assigned to a digital output, for example) in order to indicate the cause of the stop
[fallback spd]	L F F	Change to fallback speed, maintained as long as the detected error persists and the run command has not been removed (1)
[Spd maint.]	r L S	The drive maintains the speed being applied when the detected error occurred, as long as the detected error is active and the run command has not been removed (1)
[Ramp stop]	r M P	Stop on ramp
[Fast stop]	F S t	Fast stop
[DC injection]	d C 1	DC injection stop. This type of stop cannot be used with some other functions
(1) Because, in this case, the detected error does not trigger a stop, it is advisable to assign a relay or digital output to its indication.		

[AI2 4-20mA loss] L F L 2

Response to 4-20mA loss on AI2.

Drive behavior on AI2 4-20 event.

Identical to **[AI1 4-20mA Loss]** L F L 1

[AI3 4-20mA loss] L F L 3

Response to 4-20mA loss on AI3.

Drive behavior on AI3 4-20 event.

Identical to **[AI1 4-20mA Loss]** L F L 1

[AI4 4-20mA loss] L F L 4 ★

Response to 4-20mA loss on AI4.

Drive behavior on AI4 4-20 event.

Identical to **[AI1 4-20mA Loss]** L F L 1

This parameter can be accessed if VW3A3203 I/O extension module has been inserted.

[AI5 4-20mA loss] L F L 5 ★

Response to 4-20mA loss on AI5.

Drive behavior on AI5 4-20 event.

Identical to **[AI1 4-20mA Loss]** L F L 1

This parameter can be accessed if VW3A3203 I/O extension module has been inserted.

[Fallback Speed] *L F F* ★

Fall back speed.

Setting	Description
0.0...500.0 Hz	Setting range **Factory setting**: 0.0 Hz

[Fallback speed] *L F F* - Menu

Access

[Complete settings] ➡ [Error/Warning handling] ➡ [Fallback speed]

[Fallback Speed] *L F F*

Fall back speed.

Setting	Description
0.0...500.0 Hz	Setting range **Factory setting**: 0.0 Hz

[Fieldbus monitoring] CLL - Menu

Access

[Complete settings] ➞ [Error/Warning handling] ➞ [Fieldbus monitoring]

[Modbus Error Resp] SLL

Response to Modbus interruption.

⚠ WARNING

LOSS OF CONTROL

If this parameter is set to nO, Modbus communication monitoring is disabled.

- Only use this setting after a thorough risk assessment in compliance with all regulations and standards that apply to the device and to the application.
- Only use this setting for tests during commissioning.
- Verify that communication monitoring has been re-enabled before completing the commissioning procedure and performing the final commissioning test.

Failure to follow these instructions can result in death, serious injury, or equipment damage.

Behavior of the drive in the event of a communication interruption with integrated Modbus.

Setting	Code / Value	Description
[Ignore]	nO	Detected error ignored
[Freewheel]	YES	Freewheel stop **Factory setting**
[Per STT]	STT	Stop according to configuration of **[Type of stop]** STT, without tripping. In this case, the error relay does not open and the drive is ready to restart as soon as the detected error disappears, according to the restart conditions of the active command channel (for example, according to **[2/3-wire control]** tCC and **[2-wire type]** tCt if control is via the terminals)(1)
[fallback spd]	LFF	Change to fallback speed, maintained as long as the detected error persists and the run command has not been removed(1)
[Spd maint.]	rLS	The drive maintains the speed being applied when the detected error occurred, as long as the detected error is active and the run command has not been removed(1)
[Ramp stop]	rMP	Stop on ramp
[Fast stop]	FST	Fast stop
[DC injection]	dCI	DC injection stop. This type of stop cannot be used with some other functions
(1) Because, in this case, the detected error does not trigger a stop, it is advisable to assign a relay or digital output to its indication.		

[Fallback Speed] LFF

Fall back speed.

Setting	Description
0.0...500.0 Hz	Setting range **Factory setting**: 0.0 Hz

[Embedded Modbus TCP] E M b C - Menu

Access

[Complete settings] ➞ [Error/Warning handling] ➞ [Embedded Modbus TCP]

[Eth Error Response] E b H L

Ethernet error response.

⚠ WARNING

LOSS OF CONTROL

If this parameter is set to n o, communication monitoring is disabled.

- Only use this setting after a thorough risk assessment in compliance with all regulations and standards that apply to the device and to the application.
- Only use this setting for tests during commissioning.
- Verify that communication monitoring has been re-enabled before completing the commissioning procedure and performing the final commissioning test.

Failure to follow these instructions can result in death, serious injury, or equipment damage.

The error response to a communication interruption is effective if the communication channel is involved in the active command channel.

Setting	Code / Value	Description
[Ignore]	n o	Detected error ignored
[Freewheel]	y E S	Freewheel stop **Factory setting**
[Per STT]	S t t	Stop according to configuration of [Type of stop] S t t, without tripping. In this case, the error relay does not open and the drive is ready to restart as soon as the detected error disappears, according to the restart conditions of the active command channel (for example, according to [2/3-wire control] t C C and [2-wire type] t C t if control is via the terminals)(1)
[fallback spd]	L F F	Change to fallback speed, maintained as long as the detected error persists and the run command has not been removed(1)
[Spd maint.]	r L S	The drive maintains the speed being applied when the detected error occurred, as long as the detected error is active and the run command has not been removed(1)
[Ramp stop]	r M P	Stop on ramp
[Fast stop]	F S t	Fast stop
[DC injection]	d C I	DC injection stop. This type of stop cannot be used with some other functions
(1) Because, in this case, the detected error does not trigger a stop, it is advisable to assign a relay or digital output to its indication.		

[Fallback Speed] L F F ★

Fall back speed.

Setting	Description
0.0...500.0 Hz	Setting range **Factory setting**: 0.0 Hz

[Communication module] C o M o - Menu

Access

[Complete settings] ➞ [Error/Warning handling] ➞ [Communication module]

[Fieldbus Interrupt Resp] C L L

⚠ WARNING

LOSS OF CONTROL

If this parameter is set to n o, fieldbus communication monitoring is disabled.

- Only use this setting after a thorough risk assessment in compliance with all regulations and standards that apply to the device and to the application.
- Only use this setting for tests during commissioning.
- Verify that communication monitoring has been re-enabled before completing the commissioning procedure and performing the final commissioning test.

Failure to follow these instructions can result in death, serious injury, or equipment damage.

Response to fieldbus module communication interruption.

Setting	Code / Value	Description
[Ignore]	n o	Detected error ignored
[Freewheel]	Y E S	Freewheel stop **Factory setting**
[Per STT]	S t t	Stop according to configuration of [Type of stop] S t t, without tripping. In this case, the error relay does not open and the drive is ready to restart as soon as the detected error disappears, according to the restart conditions of the active command channel (for example, according to [2/3-wire control] t C C and [2-wire type] t C t if control is via the terminals)(1)
[fallback spd]	L F F	Change to fallback speed, maintained as long as the detected error persists and the run command has not been removed(1)
[Spd maint.]	r L S	The drive maintains the speed being applied when the detected error occurred, as long as the detected error is active and the run command has not been removed(1)
[Ramp stop]	r M P	Stop on ramp
[Fast stop]	F S t	Fast stop
[DC injection]	d C I	DC injection stop. This type of stop cannot be used with some other functions

(1) Because, in this case, the detected error does not trigger a stop, it is advisable to assign a relay or digital output to its indication.

[CANopen Error Resp] C o L

⚠ WARNING

LOSS OF CONTROL

If this parameter is set to n o, CANopen communication monitoring is disabled.

- Only use this setting after a thorough risk assessment in compliance with all regulations and standards that apply to the device and to the application.
- Only use this setting for tests during commissioning.
- Verify that communication monitoring has been re-enabled before completing the commissioning procedure and performing the final commissioning test.

Failure to follow these instructions can result in death, serious injury, or equipment damage.

Response to CANopen error.

Behavior of the drive in the event of a communication interruption with CANopen®.

Setting	Code / Value	Description
[Ignore]	nO	Detected error ignored
[Freewheel]	YES	Freewheel stop **Factory setting**
[Per STT]	StT	Stop according to configuration of **[Type of stop]** StT, without tripping. In this case, the error relay does not open and the drive is ready to restart as soon as the detected error disappears, according to the restart conditions of the active command channel (for example, according to **[2/3-wire control]** tCC and **[2-wire type]** tCt if control is via the terminals)(1)
[fallback spd]	LFF	Change to fallback speed, maintained as long as the detected error persists and the run command has not been removed(1)
[Spd maint.]	rLS	The drive maintains the speed being applied when the detected error occurred, as long as the detected error is active and the run command has not been removed(1)
[Ramp stop]	rMP	Stop on ramp
[Fast stop]	FSt	Fast stop
[DC injection]	dCI	DC injection stop. This type of stop cannot be used with some other functions
(1) Because, in this case, the detected error does not trigger a stop, it is advisable to assign a relay or digital output to its indication.		

[Fallback Speed] LFF ★

Fall back speed.

Setting	Description
0.0...500.0 Hz	Setting range **Factory setting**: 0.0 Hz

[Undervoltage handling] uSb - Menu

Access

[Complete settings] ➞ [Error/Warning handling] ➞ [Undervoltage handling]

[Undervoltage Resp] uSb

Response to undervoltage.

Setting	Code / Value	Description
[Error Triggered]	0	The drive triggers an error (the detected error relay assigned to **[Operating State Fault]** FLt will be opened) **Factory setting**
[Error Triggered w/o Relay]	1	The drive triggers an error (the detected error relay assigned to **[Operating State Fault]** FLt remains closed)
[Warning Triggered]	2	The warning and detected error relay remain closed. The warning can be assigned to a digital output or a relay

[Mains Voltage] urES

Rated voltage of the mains supply in Vac.

The factory setting value of this parameter depends of drive rating.

Settings	Code / Value	Description
[200 Vac]	200	200 Vac
[220 Vac]	220	220 Vac
[230 Vac]	230	230 Vac
[240 Vac]	240	240 Vac
[380 Vac]	380	380 Vac
[400 Vac]	400	400 Vac
[415 Vac]	415	415 Vac
[440 Vac]	440	440 Vac
[460 Vac]	460	460 Vac
[480 Vac]	480	480 Vac
[525 Vac]	525	525 Vac
[575 Vac]	575	575 Vac
[600 Vac]	600	600 Vac
[690 Vac]	690	690 Vac

[Undervoltage Level] uSL

Undervoltage level.

The factory setting is determined by the drive voltage rating.

Setting	Description
100...354 Vac	Setting range, according to drive rating **Factory setting**: According to drive rating

[UnderVolt Timeout] uSt

Undervoltage timeout.

Setting	Description
0.2...999.9 s	Setting range **Factory setting**: 0.2 s

[Stop Type PLoss] $5tP$

Controlled stop on power loss.

Behavior in the event of the undervoltage prevention level being reached.

Setting	Code / Value	Description
[No]	nO	No action **Factory setting**
[DC Maintain]	$dC5$	This stop mode uses the inertia of the application to maintain the control block powered, and thus to keep operational I/O state and fieldbus link as long as possible.
[Ramp stop]	rMP	Stop following an adjustable deceleration ramp **[Max stop time]** $5tM$ in order to help to prevent from uncontrolled stop of the application.
[Freewheel Stop]	LnF	Lock (freewheel stop) without triggering an error

[UnderV. Restart Tm] tSM ★

Undervoltage restart time.

This parameter can be accessed if **[CtrlStopPLoss]** $5tP$ is set to **[Ramp stop]** rMP.

The time delay before authorizing the restart after a complete stop for **[CtrlStopPLoss]** $5tP$ is set to **[Ramp stop]** rMP if the voltage has returned to normal.

Setting ❮❯	Description
1.0...999.9 s	Setting range **Factory setting**: 1.0 s

[Prevention Level] uPL ★

Undervoltage prevention level.

This parameter can be accessed if **[CtrlStopPLoss]** $5tP$ is set to **[No]** nO.

The adjustment range and factory setting are determined by the drive voltage rating and the **[Mains Voltage]** $urES$ value.

Setting	Description
141...414 V	Setting range **Factory setting**: According to drive rating

[Max Stop Time] $5tM$ ★

Maximum stop time.

This parameter can be accessed if **[CtrlStopPLoss]** $5tP$ is set to **[Ramp stop]** rMP.

This parameter defines the deceleration ramp time in case of mains loss. During this controlled stop, the drive is powered thanks to the inertia of the application, the motor is in generator mode. It is recommended to verify that the deceleration set is compatible with the application inertia.

Setting ❮❯	Description
0.01...60.00 s	Setting range **Factory setting**: 1.00 s

[DC Bus Maintain Time] tbS ★

DC bus maintain time.

This parameter can be accessed if **[CtrlStopPLoss]** $5tP$ is set to **[DC Maintain]** $dC5$.

Setting ❮❯	Description
1...9999 s	Setting range **Factory setting**: 9999 s

[Ground Fault] GrFL - Menu

Access

[Complete settings] ➡ **[Error/Warning handling]** ➡ **[Ground Fault]**

About This Menu

This menu can be accessed if **[Access Level]** is set to **[Expert]** EPr

If the internal ground fault detection **[Ground Fault]** GrFL causes unwanted results in your application, it is possible to substitute the internal ground fault detection by an approriate external ground fault monitoring system. Setting the parameter **[Ground Fault]** GrFL to **[ErrorDetect Disable]** inH or to a percentage value of the nominal current of the drive disables the internal ground fault detection of the drive or reduces its effectiveness. Therefore, you must install an external ground fault detection system that is able to reliably detect ground faults.

⚠ DANGER

GROUND FAULT MONITORING DISABLED

- Only set the parameter **[Ground Fault]** GrFL to **[ErrorDetect Disable]** inH or to a percentage value of the nominal current of the drive after a thorough risk assessment in compliance with all regulations and standards that apply to the device and to the application.
- Implement an alternative, external ground fault monitoring function that allows for an adequate, equivalent response to a ground fault of the drive in compliance with all applicable regulations and standards as well as the risk assessment.
- Commission and test the system with all monitoring functions enabled.
- During commissioning, verify that the alternative, external ground fault detection system properly detects any type of ground faults by performing tests and simulations in a controlled environment under controlled conditions.

Failure to follow these instructions will result in death or serious injury.

[Ground Fault Activation] GrFL

Ground fault error response.

NOTE: The setting of this parameter is taken into account after a product restart.

Setting	Code / Value	Description
[ErrorDetect Disable]	inH	Disables error detection
[Yes]	YES	Use product internal value. Around 25% of the drive nominal current. **Factory setting**
0.0...100.0%	_	Setting range, in % of the drive nominal current

[Motor thermal monit] ΕΗΕ - Menu

Access

[Complete settings] ➡ [Error/Warning handling] ➡ [Motor thermal monit]

About this Menu

Motor thermal protection by calculating the I^2t.

NOTE: The motor thermal state is memorized when the drive is switched off. The power-off time is used to calculate the motor thermal state at the next startup.

- Self-cooled motors: The trigger curves depend on the motor frequency.
- Forced-cooled motors: Only the 50 Hz trigger curves needs to be considered, regardless of the motor frequency.

Below a curve for 50Hz motor.

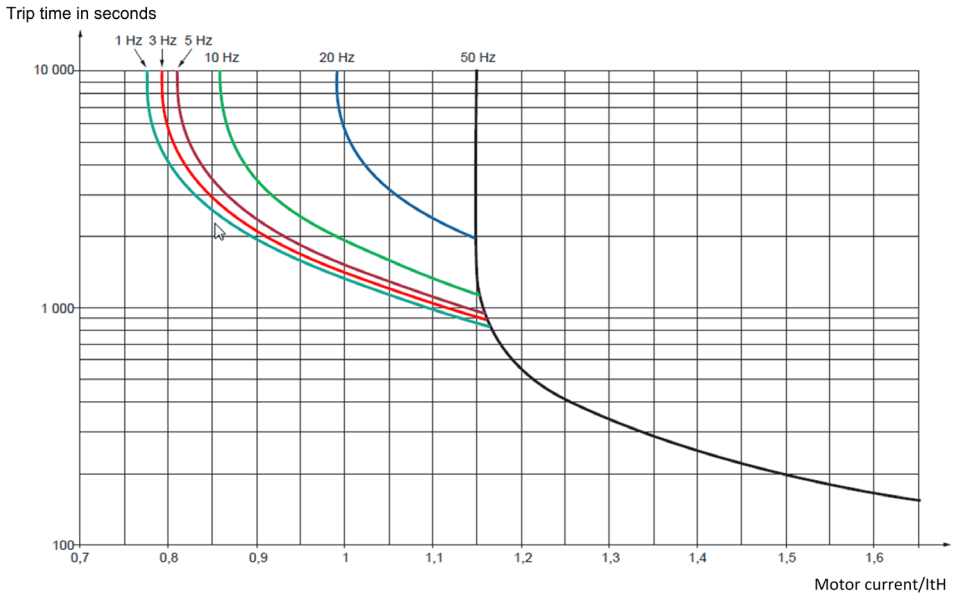

Below a curve for 60Hz motor.

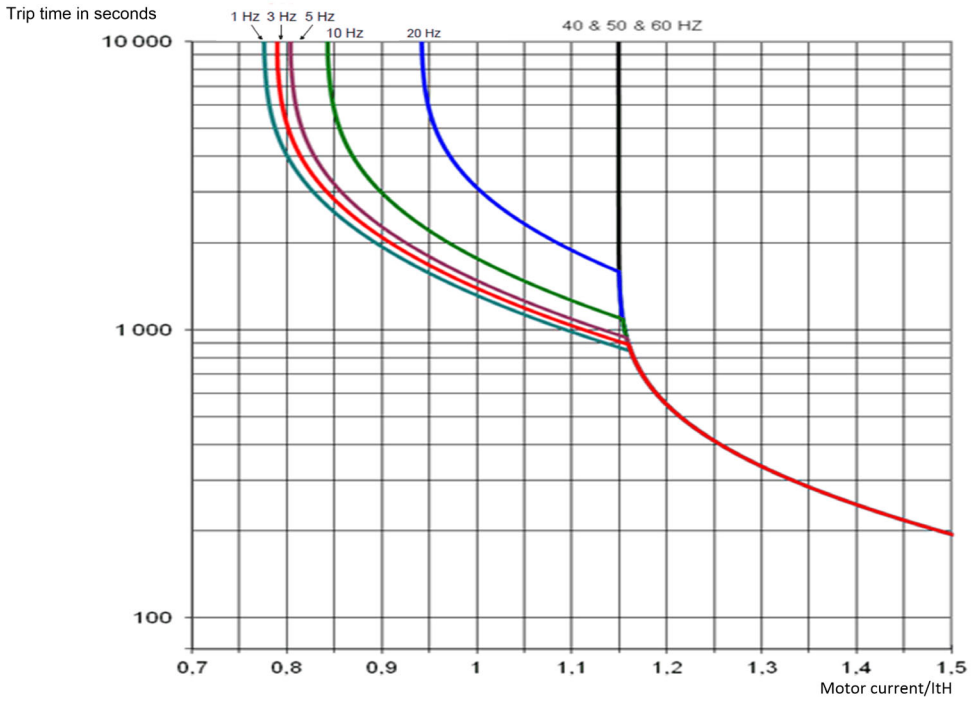

[Motor Th Current] ıtH

Motor thermal monitoring current to be set to the rated current indicated on the nameplate.

Setting	Description
0.12...1.1_In(1)	Setting range **Factory setting**: According to drive rating
(1) Corresponding to the rated drive current indicated in the installation manual and on the drive nameplate.	

[Motor Thermal Mode] tHt

Motor thermal monitoring mode.

NOTE: An error is detected when the thermal state reaches 118% of the rated state and reactivation occurs when the state falls back below 100%.

Setting	Code / Value	Description
[No]	nO	No thermal monitoring
[Self cooled]	ACL	Self ventilated motor **Factory setting**
[Force-cool]	FCL	Fan-cooled motor

[Drive overload monit] obr - Menu

Access

[Complete settings] ➡ [Error/Warning handling] ➡ [Drive overload monit]

[DriveTemp ErrorResp] oHL

Drive overtemperature error response.

Setting	Code / Value	Description
[Ignore]	nO	Detected error ignored
[Freewheel]	YES	Freewheel stop **Factory setting**
[Per STT]	STT	Stop according to configuration of **[Type of stop]** STT, without tripping. In this case, the error relay does not open and the drive is ready to restart as soon as the detected error disappears, according to the restart conditions of the active command channel (for example, according to **[2/3-wire control]** tCC and **[2-wire type]** tCt if control is via the terminals)(1)
[fallback spd]	LFF	Change to fallback speed, maintained as long as the detected error persists and the run command has not been removed(1)
[Spd maint.]	rLS	The drive maintains the speed being applied when the detected error occurred, as long as the detected error is active and the run command has not been removed(1)
[Ramp stop]	rMP	Stop on ramp
[Fast stop]	FST	Fast stop
[DC injection]	dCI	DC injection stop. This type of stop cannot be used with some other functions
(1) Because, in this case, the detected error does not trigger a stop, it is advisable to assign a relay or digital output to its indication.		

[Drv Thermal Warning] tHA

Drive thermal state warning (for **[Drv Therm Thd reached]** tHd warning).

Setting	Description
0...118%	Setting range **Factory setting**: 100%

[Warn grp 1 definition] A 1C - Menu

Access

[Complete settings] ➞ [Error/Warning handling] ➞ [Warning groups config] ➞ [Warn grp 1 definition]

About This Menu

The following submenus group the warnings into 1 to 5 groups, each of which can be assigned to a relay or a digital output for remote signaling.

When one or a number of warnings selected in a group occur, this warning group is activated.

List of Warnings

Setting	Code	Description
[No Warning stored]	noA	No warning stored
[Fallback Frequency]	FrF	Reaction on event: Fallback frequency
[Speed Maintained]	rLS	Reaction on event: Speed maintained
[Type of stop]	StE	Reaction on event: Stop following **[Type of stop]** StE without triggering an error
[Ref Frequency Warning]	SrA	Frequency reference reached
[Life Cycle Warn 1]	LCA1	Life cycle warning 1 *(see page 561)*
[Life Cycle Warn 2]	LCA2	Life cycle warning 2 *(see page 561)*
[Dry Run Warning]	drYA	Dry run warning *(see page 381)*
[High Flow Warning]	HFPA	High flow warning *(see page 400)*
[InPress Warning]	iPPA	Inlet pressure monitoring warning *(see page 391)*
[Low OutPres Warn]	oPLA	Low outlet pressure warning *(see page 396)*
[High OutPres Warn]	oPHA	High outlet pressure warning *(see page 396)*
[PumpCycle warning]	PCPA	Pumpcycle monitoring warning *(see page 373)*
[Anti-Jam Warning]	JAMA	Anti-jam warning *(see page 375)*
[Pump Low Flow]	PLFA	Pump low flow warning *(see page 384)*
[LowPres Warning]	LPA	Low pressure warning
[Flow Limit activated]	FSA	Flow limitation function is active *(see page 370)*
[PID error Warning]	PEE	PID error warning *(see page 321)*
[PID Feedback Warn]	PFA	PID feedback warning *(see page 314)*
[PID High Fdbck Warn]	PFAH	PID feedback high threshold reached *(see page 314)*
[PID Low Fdbck Warn]	PFAL	PID feedback low threshold reached *(see page 314)*
[Regulation Warning]	PiSH	PID feedback monitoring warning *(see page 336)*
[AI2 Th Warning]	tP2A	AI2 Thermal warning *(see page 188)*
[AI3 Th Warning]	tP3A	AI3 Thermal warning *(see page 188)*
[AI4 Th Warning]	tP4A	AI4 Thermal warning *(see page 188)*
[AI5 Th Warning]	tP5A	AI5 Thermal warning *(see page 188)*
[AI1 4-20 Loss Warning]	AP1	AI1 4-20 mA loss warning *(see page 542)*
[AI2 4-20 Loss Warning]	AP2	AI2 4-20 mA loss warning *(see page 542)*
[AI3 4-20 Loss Warning]	AP3	AI3 4-20 mA loss warning *(see page 542)*
[AI4 4-20 Loss Warning]	AP4	AI4 4-20 mA loss warning *(see page 542)*
[AI5 4-20 Loss Warning]	AP5	AI5 4-20 mA loss warning *(see page 542)*
[Drive Thermal Warning]	tHA	Drive overhearting warning
[IGBT Thermal Warning]	tJA	IGBT thermal state warning
[Fan Counter Warning]	FCtA	Fan counter speed warning *(see page 566)*
[Fan Feedback Warning]	FFdA	Fan feedback warning *(see page 566)*
[Ext. Error Warning]	EFA	External error warning *(see page 538)*
[Undervoltage Warning]	uSA	Undervoltage warning *(see page 549)*
[Preventive UnderV Active]	uPA	Controlled stop threshold is reached *(see page 549)*

Setting	Code	Description
[2nd Freq Thd Reached]	F2A	Motor frequency high threshold 2 reached *(see page 438)*
[Current Thd Reached]	CtA	Motor current high treshold reached *(see page 438)*
[Low Current Reached]	CtAL	Motor current low threshold reached *(see page 438)*
[High Torque Warning]	ttHA	High torque threshold reached *(see page 439)*
[Low Torque Warning]	ttLA	Low torque threshold reached *(see page 439)*
[Process Undld Warning]	uLA	Underload warning *(see page 461)*
[Process Overload Warning]	oLA	Overload warning *(see page 463)*
[Drv Therm Thd reached]	tAd	Drive thermal threshold reached *(see page 554)*
[Motor Therm Thd reached]	tSA	Motor thermal threshold reached *(see page 439)*
[Mot Freq High Thd]	FtA	Motor frequency high threshold 1 reached *(see page 438)*
[Mot Freq Low Thd]	FtAL	Motor frequency low threshold 1 reached *(see page 438)*
[Mot Freq Low Thd 2]	F2AL	Motor frequency low threshold 2 reached *(see page 438)*
[High Speed Reached]	FLA	High speed reached warning
[Ref Freq High Thd reached]	rtAH	Reference frequency high threshold reached *(see page 439)*
[Ref Freq Low Thd reached]	rtAL	Reference frequency low threshold reached *(see page 439)*
[Cust Warning 5]	CA55	Customer warning 5 active *(see page 564)*
[AFE Mains Undervoltage]	urA	AFE mains undervoltage
[Power Cons Warning]	PoWd	Power consumption warning
[Switch OutPres Warn]	oPSA	Outlet pressure high switch warning *(see page 397)*
[MP Capacity Warn]	nPCA	Multipump available capacity warning *(see page 262)*
[Lead Pump Warn]	nPLA	Lead pump not available warning *(see page 262)*
[High Level Warning]	LCHA	High level warning *(see page 290)*
[Low Level Warning]	LCLA	Low level warning *(see page 290)*
[Level Switch Warning]	LCWA	Level switch warning *(see page 290)*
[MonitorCircuit A Warn]	iWA	Monitoring circuit A warning *(see page 569)*
[MonitorCircuit B Warn]	iWb	Monitoring circuit B warning *(see page 571)*
[MonitorCircuit C Warn]	iWC	Monitoring circuit C warning *(see page 571)*
[MonitorCircuit D Warn]	iWd	Monitoring circuit D warning *(see page 572)*
[CabinetCircuit A Warn]	CWA	Cabinet circuit A warning *(see page 573)*
[CabinetCircuit B Warn]	CWb	Cabinet circuit B warning *(see page 573)*
[CabinetCircuit C Warn]	CWC	Cabinet circuit C warning *(see page 574)*
[MotorWinding A Warn]	tWA	Motor winding A warning *(see page 575)*
[MotorWinding B Warn]	tWb	Motor winding B warning *(see page 575)*
[MotorBearing A Warn]	tWC	Motor bearing A warning *(see page 576)*
[MotorBearing B Warn]	tWd	Motor bearing B warning *(see page 576)*
[Circuit Breaker Warn]	CbW	Circuit breaker warning *(see page 577)*
[Cab I/O 24V Warn]	P24C	Cabinet I/O 24V missing warning
[AFE Motor Limitation]	CLiM	AFE motor limitation *(see page 459)*
[AFE Generator Limitation]	CLiG	AFE regen limitation *(see page 459)*
[AFE Sensor thermal state]	tHSA	AFE thermal state warning
[AFE IGBT thermal state]	tHJA	AFE IGBT thermal warning
[Cabinet Fan Fdbck Warn]	FFCA	Cabinet fan feedback warning *(see page 566)*
[Cabinet Fan Counter Warn]	FCCA	Cabinet fan counter warning *(see page 566)*
[Cabinet Overheat Warn]	CHA	Cabinet overheat warning
[CMI Jumper Warn]	CMiJ	CMI jumper warning
[AFE Fan Counter Warn]	FCbA	AFE fan counter warning *(see page 566)*

Setting	Code	Description
[AFE Fan Fdbck Warn]	FFbA	AFE fan feedback warning *(see page 566)*
[M/P Device Warn]	MPdA	Multipump device warning *(see page 262)*
[Temp Sens AI2 Warn]	tS2A	Temperature sensor AI2 warning (open circuit)
[Temp Sens AI3 Warn]	tS3A	Temperature sensor AI3 warning (open circuit)
[Temp Sens AI4 Warn]	tS4A	Temperature sensor AI4 warning (open circuit)
[Temp Sens AI5 Warn]	tS5A	Temperature sensor AI5 warning (open circuit)
[Bypass Poc Warning 1]	byW1	Bypass Power Cell warning 1
[Bypass Poc Warning 2]	byW2	Bypass Power Cell warning 2

[Warn grp 2 definition] A 2 C - Menu

Access

[Complete settings] ➞ [Error/Warning handling] ➞ [Warning groups config] ➞ [Warn grp 2 definition]

About This Menu

Identical to **[Warn grp 1 definition]** A 1 C *(see page 555)*

[Warn grp 3 definition] A 3 C - Menu

Access

[Complete settings] ➞ [Error/Warning handling] ➞ [Warning groups config] ➞ [Warn grp 3 definition]

About This Menu

Identical to **[Warn grp 1 definition]** A 1 C *(see page 555)*

[Warn grp 4 definition] A 4 C - Menu

Access

[Complete settings] ➞ [Error/Warning handling] ➞ [Warning groups config] ➞ [Warn grp 4 definition]

About This Menu

Identical to **[Warn grp 1 definition]** A 1 C *(see page 555)*

[Warn grp 5 definition] A 5 C - Menu

Access

[Complete settings] ➞ [Error/Warning handling] ➞ [Warning groups config] ➞ [Warn grp 5 definition]

About This Menu

Identical to **[Warn grp 1 definition]** A 1 C *(see page 555)*

Section 8.58
[Maintenance]

What Is in This Section?

This section contains the following topics:

Topic	Page
[Diagnostics] dRu - Menu	560
[Drive warranty mgnt] dWnR - Menu	561
[Customer event 1] CE 1 - Menu	562
[Customer event 2] CE2 - Menu	563
[Customer event 3] CE3 - Menu	563
[Customer event 4] CE4 - Menu	564
[Customer event 5] CE5 - Menu	564
[Customer events] CuEV - Menu	565
[Fan management] FAnA - Menu	566
[Maintenance] CSnA - Menu	567

[Diagnostics] dRu - Menu

Access

[Complete settings] ➡ [Maintenance] ➡ [Diagnostics]

About This Menu

This menu allows you to make simple test sequences for diagnostics.

[FAN Diagnostics] Fnt

Diagnostics of internal fan(s).

This starts a test sequence.

NOTE:
Fan diagnostics of internal fan(s) will be not-successful if the DC bus is not fully charged. This will be the case:

- on separate control (e.g. the control block is only supplied on 24V), or
- if the drive is in **[Energy saving]** idLE mode (e.g. Stop and go function is active).

[LED Diagnostics] HLt

Diagnostics of product LED(s).

This starts a test sequence.

[IGBT Diag w motor] iWt

Diagnostics of internal fan(s).

This starts a test sequence with the motor (open circuit/short-circuit).

[IGBT Diag w/o motor] iWot

Diagnostics of product IGBT(s).

This starts a test sequence without the motor (short-circuit).

[Drive warranty mgnt] dWnA - Menu

Access

[Complete settings] ➞ [Maintenance] ➞ [Drive warranty mgnt]

About This Menu

The product life cycle date is initialized during product manufacturing.

A **[Life Cycle Warn 1]** LCA1 is triggered 2 months before the end of the warranty period. At the end of the warranty period a **[Life Cycle Warn 2]** LCA2 is triggered. This function requires date and time data coming from Graphic Display Terminal or a time server configured trough Ethernet.

[LifeCycle Warning] LCAC

Life cycle warning configuration.

Setting	Code / Value	Description
[No]	no	No
[YES]	YES	Yes **Factory setting**

[Warranty Expired] LCAd

Life cycle date.

End of warranty date (YYYY/MM/DD).

Setting	Description
YYYY/MM/DD	Setting range **Factory setting**: _

[Customer event 1] CE1 - Menu

Access

[Complete settings] ➞ [Maintenance] ➞ [Customer events] ➞ [Customer event 1]

About This Menu

This menu allows you to define customized customer events based on the time.

[Config Warning 1] CCA1

Configuration of customer warning 1.

Setting	Code / Value	Description
[Not Configured]	no	Not configured **Factory setting**
[Counter]	CPt	Counter
[Date And Time]	dt	Date and time

[Counter Limit 1] CCL1

Configuration counter limit 1.

Setting	Description
0...4294967295 s	Setting range **Factory setting**: 0 s

[Counter Source 1] CCS1

Configuration counter source 1.

Setting	Code / Value	Description
[Mains/Control ON]	0	Mains or control supply on
[Mains Supply ON]	1	Mains supply on
[Drv In Run State]	2	Drive in running state **Factory setting**

[Current Counter 1] CC1

Current counter 1.

Setting	Description
0...4294967295 s	Setting range **Factory setting**: 0 s

[Date Time Warn 1] Cdt1★

Date time warning 1.

This parameter can be accessed with the Graphic Display Terminal only.

Setting ❮❯	Description
hh:mm DD/MM/YYYY	Setting range **Factory setting**: 00:00 01/01/2000

[Customer event 2] CE2- Menu

Access

[Complete settings] ➞ [Maintenance] ➞ [Customer events] ➞ [Customer event 2]

About This Menu

Identical to **[Customer event 1] CE1-** menu *(see page 562)*.

[Config Warning 2] CCA2

Configuration of customer warning 2.

[Counter Limit 2] CCL2

Configuration counter limit 2.

[Counter Source 2] CCS2

Configuration counter source 2.

[Current Counter 2] CC2

Current counter 2.

[Date Time Warn 2] CdE2 ★

Date time warning 2.

This parameter can be accessed with the Graphic Display Terminal only.

[Customer event 3] CE3- Menu

Access

[Complete settings] ➞ [Maintenance] ➞ [Customer events] ➞ [Customer event 3]

About This Menu

Identical to **[Customer event 1] CE1-** menu *(see page 562)*.

[Config Warning 3] CCA3

Configuration of customer warning 3.

[Counter Limit 3] CCL3

Configuration counter limit 3.

[Counter Source 3] CCS3

Configuration counter source 3.

[Current Counter 3] CC3

Current counter 3.

[Date Time Warn 3] CdE3 ★

Date time warning 3.

This parameter can be accessed with the Graphic Display TerminalGraphic display terminal only.

[Customer event 4] C E 4 - Menu

Access

[Complete settings] ➡ [Maintenance] ➡ [Customer events] ➡ [Customer event 4]

About This Menu

Identical to **[Customer event 1] C E 1 -** menu *(see page 562)*.

[Config Warning 4] C C A 4

Configuration of customer warning 4.

[Counter Limit 4] C C L 4

Configuration counter limit 4.

[Counter Source 4] C C S 4

Configuration counter source 4.

[Current Counter 4] C C 4

Current counter 4.

[Date Time Warn 4] C d t 4 ★

Date time warning 4.

This parameter can be accessed with the Graphic Display TerminalGraphic display terminal only.

[Customer event 5] C E 5 - Menu

Access

[Complete settings] ➡ [Maintenance] ➡ [Customer events] ➡ [Customer event 5]

About This Menu

Identical to **[Customer event 1] C E 1 -** menu *(see page 562)*.

[Config Warning 5] C C A 5

Configuration of customer warning 5.

[Counter Limit 5] C C L 5

Configuration counter limit 5.

[Counter Source 5] C C S 5

Configuration counter source 5.

[Current Counter 5] C C 5

Current counter 5.

[Date Time Warn 5] C d t 5 ★

Date time warning 5.

This parameter can be accessed with the Graphic Display Terminal only.

[Customer events] CuEV - Menu

Access

[Complete settings] ➞ [Maintenance] ➞ [Customer events]

[Warning Clearing] CArr

Customer warning clearing.

Setting	Code / Value	Description
[No Warning Clearing]	nO	No warning clearing **Factory setting**
[Clear Event 1 Warning]	rA1	Clear event 1 warning
[Clear Event 2 Warning]	rA2	Clear event 2 warning
[Clear Event 3 Warning]	rA3	Clear event 3 warning
[Clear Event 4 Warning]	rA4	Clear event 4 warning
[Clear Event 5 Warning]	rA5	Clear event 5 warning

[Fan management] FAnA - Menu

Access

[Complete settings] ➡ **[Maintenance]** ➡ **[Fan management]**

About This Menu

Fan speed and **[Fan Operation Time]** FPbt are monitored values.

An abnormal low speed or the fan trigger a warning **[Fan Feedback Warning]** FFdA. As soon as **[Fan Operation Time]** FPbt reach the predefined value of 45,000 hours, a warning **[Fan Counter Warning]** FCtA is triggered.

[Fan Operation Time] FPbt counter can be set to 0 by using the **[Counter Reset]** rPr parameter.

Additional fan management on ATV660 and ATV680:

- If any of the cabinet fan is running at an abnormal low speed a warning **[Cabinet Fan Fdbck Warn]** FFCA is trigged.
- If **[Cabinet Fan Oper Time]** FCt has reached the predefined value of 30,000 hours, a warning **[Cabinet Fan Counter Warn]** FCCA is triggered.

Additional fan management on ATV680 and ATV6B0 only:

- If any of the AFE fan bricks is running at an abnormal low speed the **[AFE Fan Fdbck Warn]** FFbA is trigged.
- If **[AFE Fan Operation Time]** FbAt has reached the predefined value of 45,000 hours, a warning **[AFE Fan Counter Warn]** FCbA is triggered.

[Fan Mode] FFM

Fan activation mode.

NOTE: For ATV660 and ATV6A0 and ATV680 and ATV6B0, this parameter is forced to **[Standard]** Std.

Setting ❮❯	Code / Value	Description
[Standard]	Std	The operation of the fan is enabled when the motor is running. According to the drive rating, this could be the only available setting **Factory setting**
[Always]	run	The fan is always activated
[Economy]	Eco	The fan is activated only if necessary, according to the internal thermal state of the drive

[Maintenance] C S M A - Menu

Access

[Complete settings] ➞ [Maintenance]

[Time Counter Reset] r P r

Time counter reset.

NOTE: The list of possible values depends on the product size.

Setting	Code / Value	Description
[No]	n o	No **Factory setting**
[Run Time Reset]	r t H	Run time reset
[Power ON Time Reset]	P t H	Power ON time reset
[Reset Fan Counter]	F t H	Reset fan counter
[Clear NSM]	n S M	Clear number of motor starts
[Efficiency MAX]	E F Y K	Efficiency max
[Efficiency MIN]	E F Y J	Efficiency min
[Flow Rate MAX]	F S I K	Flow rate max
[Flow Rate MIN]	F S I J	Flow rate min
[Reset Total Quantity]	F S I C	Reset total quantity
[AFE Fan Operation Time]	F b A t	Fan operation time (1)
[Clear Cabinet Fan]	F C t	Clear cabinet fan operation time **NOTE:** This selection can be accessed on ATV660 and ATV680.
[Clear AFE Power ON Time]	b P t h	Clear AFE power ON time (1)
[Clear BRTH]	b r t h	Clear AFE run time (1)
[Clear AFE Nb. start]	b n S A	Clear AFE brick number of start (1)
1 This selection can be accessed on ATV680.		

Section 8.59
[Cabinet I/O Function] CAbF -

What Is in This Section?

This section contains the following topics:

Topic	Page
[Monitoring circuit A] CMCA - Menu	569
[Monitoring circuit B] CMCb - Menu	571
[Monitoring circuit C] CMCC - Menu	571
[Monitoring circuit D] CMCd - Menu	572
[Cabinet circuit A] CCMA - Menu	573
[Cabinet circuit B] CCMb - Menu	573
[Cabinet circuit C] CCMC - Menu	574
[Motor winding A] CtiA - Menu	575
[Motor winding B] Ctib - Menu	575
[Motor bearing A] CtiC - Menu	576
[Motor bearing B] Ctid - Menu	576
[Circuit breaker] CCb - Menu	577
[Cabinet I/O functions] CAbF - menu	578

[Monitoring circuit A] CMCA - Menu

Access

[Complete settings] ➞ [Cabinet I/O functions] ➞ [Monitoring circuit A]

About This Menu

The use of this function is part of the wiring for monitoring and control functions inside the enclosure.

The Monitoring Circuits give the possibility to manage 2 levels of monitoring:

- A Warning level: the drive triggers an event without stopping the application. If **[MonitorCircuit ErrorResp]** iFrX is set to **[Ignore]** nO the **[MonitorCircuit Warn]** iWX will be triggered.
- An Error level: the drive triggers an event and stops the application. If **[MonitorCircuit ErrorResp]** iFrX is set to a different value **[MonitorCircuit Error]** iFX will be triggered.

This menu is used to assign a value on a cabinet digital input active at a High Level d52H…d59H or a low level d52L …d59L, and to control its behavior.

These parameters can be accessed on ATV660 or ATV680, equipped with cabinet IO, and if **[Access Level]** LAC is set to **[Expert]** EPr.

[MonitorCircuit A Assign] iFAA

Monitoring circuit A assignment

Setting	Code / Value	Description
[Not Assigned]	nO	Not assigned **Factory setting**
[DI52 High Level]...**[DI59 High Level]**	d52H...d59H	Cabinet high assignment digital inputs
[DI52 Low Level]...**[DI59 Low Level]**	d52L ...d59L	Cabinet low assignment digital inputs

[MonitorCircuit A Monitor] iFMA ★

Monitoring circuit A error monitoring type

This parameter can be accessed if **[MonitorCircuit A Assign]** iFAA is not set to **[No]** nO

Setting	Code / Value	Description
[Always Active]	ALL	Always active **Factory setting**
[Ready & Run State]	rrY	Ready and Run state
[Run State]	run	Run state

[MonitorCircuit A Delay] iFdA ★

Monitoring circuit A delay after Run

This parameter can be accessed if **[MonitorCircuit A Assign]** iFAA is not set to **[No]** nO

Setting	Description
0...300 s	Setting range **Factory setting**: 0 s

[MonitorCircuit A ErrorResp] ,FrA ★

Response to monitoring circuit A error

This parameter can be accessed if **[MonitorCircuit A Assign]** ,FAA is not set to **[No]** no

Setting	Code / Value	Description
[Ignore]	no	Detected error ignored
[Freewheel Stop]	YES	Freewheel stop **Factory setting**
[Per STT]	StT	Stop according to **[Type of stop]** StT parameter but without an error triggered after stop
[Fallback Speed]	LFF	Change to fallback speed, maintained as long as the detected error persists and the run command has not been removed (1)
[Spd maintained]	rLS	Speed maintained as long as the detected error persists and the run command has not been removed (1)
[Ramp stop]	rMP	Stop on ramp
[Fast stop]	FSt	Fast stop
[DC injection]	dC ,	DC injection
1 Because, in this case, the detected error does not trigger a stop, it is recommended to assign a relay or logic output to its indication.		

[Monitoring circuit B] CMCb - Menu

Access

[Complete settings] ➡ [Cabinet I/O functions] ➡ [Monitoring circuit B]

About This Menu

Identical to **[Monitoring circuit A] CMCA -** menu *(see page 569)*

[MonitorCircuit B Assign] iFAb

Monitoring circuit B assignment

[MonitorCircuit B Monitor] iFMb ★

Monitoring circuit B error monitoring type

[MonitorCircuit B Delay] iFdb ★

Monitoring circuit B delay after Run

[MonitorCircuit B ErrorResp] iFrb ★

Response to monitoring circuit B error

[Monitoring circuit C] CMCC - Menu

Access

[Complete settings] ➡ [Cabinet I/O functions] ➡ [Monitoring circuit C]

About This Menu

Identical to **[Monitoring circuit A] CMCA -** menu *(see page 569)*

[MonitorCircuit C Assign] iFAC

Monitoring circuit C assignment

[MonitorCircuit C Monitor] iFMC ★

Monitoring circuit C error monitoring type

[MonitorCircuit C Delay] iFdC ★

Monitoring circuit C delay after Run

[MonitorCircuit C ErrorResp] iFrC ★

Response to monitoring circuit C error

[Monitoring circuit D] C M C d - Menu

Access

[Complete settings] ➡ [Cabinet I/O functions] ➡ [Monitoring circuit D]

About This Menu

Identical to **[Monitoring circuit A]** C M C A - menu *(see page 569)*

[MonitorCircuit D Assign] i F A d

Monitoring circuit D assignment

[MonitorCircuit D Monitor] i F M d ★

Monitoring circuit D error monitoring type

[MonitorCircuit D Delay] i F d d ★

Monitoring circuit D delay after Run

[MonitorCircuit D ErrorResp] i F r d ★

Response to monitoring circuit D error

[Cabinet circuit A] CCnA - Menu

Access

[Complete settings] ➡ **[Cabinet I/O functions]** ➡ **[Cabinet circuit A]**

About This Menu

These functions can be used to manage warnings or detected errors inside the cabinet enclosure.

The cabinet circuits give the possibility to manage 2 levels of monitoring:

- A Warning level: the drive triggers an event without stopping the application.
  If **[CabinetCircuit ErrorResp]** CFrX is set to **[Ignore]** no the **[CabinetCircuit Warn]** CWX will be triggered.
- An Error level: the drive triggers an event and stops the application.
  If **[CabinetCircuit ErrorResp]** CFrX is set to a different value **[CabinetCircuit Error]** CFX will be triggered.

Identical to **[Monitoring circuit A]** CnCA - menu *(see page 569)*

[CabinetCircuit A Assign] CFAA

Cabinet circuit A assignment

[CabinetCircuit A Monitor] CFnA ★

Cabinet circuit A error monitoring type

[CabinetCircuit A Delay] CFdA ★

Cabinet circuit A delay after Run

[CabinetCircuit A ErrorResp] CFrA ★

Response to Cabinet circuit A error

[Cabinet circuit B] CCnb - Menu

Access

[Complete settings] ➡ **[Cabinet I/O functions]** ➡ **[Cabinet circuit B]**

About This Menu

Identical to **[Cabinet circuit A]** CCnA - menu *(see page 569)*

[CabinetCircuit B Assign] CFAb

Cabinet circuit B assignment

[CabinetCircuit B Monitor] CFnb ★

Cabinet circuit B error monitoring type

[CabinetCircuit B Delay] CFdb ★

Cabinet circuit B delay after Run

[CabinetCircuit B ErrorResp] CFrb ★

Response to Cabinet circuit B error

[Cabinet circuit C] C C Π C - Menu

Access

[Complete settings] ➡ [Cabinet I/O functions] ➡ [Cabinet circuit C]

About This Menu

Identical to **[Cabinet circuit A] C C Π A -** menu *(see page 569)*

[CabinetCircuit C Assign] C F A C

Cabinet circuit C assignment

[CabinetCircuit C Monitor] C F Π C ★

Cabinet circuit C error monitoring type

[CabinetCircuit C Delay] C F d C ★

Cabinet circuit C delay after Run

[CabinetCircuit C ErrorResp] C F r C ★

Response to Cabinet circuit C error

[Motor winding A] CtiA- Menu

Access

[Complete settings] ➡ [Cabinet I/O functions] ➡ [Motor winding A]

About This Menu

These functions will be mainly used with additional thermal relays to monitor the motor winding temperature.

These functions give the possibility to manage 2 levels of monitoring:

- A Warning level: the drive triggers an event without stopping the application.
  If **[MotorWinding/Bearing ErrorResp]** tFrX is set to **[Ignore]** no the **[MotorWinding/Bearing Warn]** CWX will be triggered.
- An Error level: the drive triggers an event and stops the application.
  If **[MotorWinding/Bearing ErrorResp]** tFrX is set to a different value **[MotorWinding/Bearing Error]** tFX will be triggered.

Identical to **[Monitoring circuit A]** CMCA- menu *(see page 569)*

[MotorWinding A Assign] tFAA

Motor winding A assignment

[MotorWinding A Monitor] tFMA★

Motor winding A monitoring

[MotorWinding A Delay] tFdA★

Motor winding A delay after Run

[MotorWinding A ErrorResp] tFrA★

Response to Motor winding A error

[Motor winding B] CtiB- Menu

Access

[Complete settings] ➡ [Cabinet I/O functions] ➡ [Motor winding B]

About This Menu

Identical to **[Motor winding A]** CtiA- menu *(see page 575)*

[MotorWinding B Assign] tFAb

Motor winding B assignment

[MotorWinding B Monitor] tFMb★

Motor winding B monitoring

[MotorWinding B Delay] tFdb★

Motor winding B delay after Run

[MotorWinding B ErrorResp] tFrb★

Response to Motor winding B error

[Motor bearing A] CbA- Menu

Access

[Complete settings] ➞ [Cabinet I/O functions] ➞ [Motor bearing A]

About This Menu

Identical to **[Motor winding A]** CbA- menu *(see page 575)*

[MotorBearing A Assign] bFAC

Motor bearing A assignment

[MotorBearing A Monitor] bFnC ★

Motor winding A monitoring

[MotorBearing A Delay] bFdC ★

Motor bearing A delay after Run

[MotorBearing A ErrorResp] bFrC ★

Response to Motor bearing A error

[Motor bearing B] CbB- Menu

Access

[Complete settings] ➞ [Cabinet I/O functions] ➞ [Motor bearing B]

About This Menu

Identical to **[Motor winding A]** CbA- menu *(see page 575)*

[MotorBearing B Assign] bFAd

Motor bearing B assignment

[MotorBearing B Monitor] bFnd ★

Motor winding B monitoring

[MotorBearing B Delay] bFdd ★

Motor bearing B delay after Run

[MotorBearing B ErrorResp] bFrd ★

Response to Motor bearing B error

[Circuit breaker] CCb - Menu

Access

[Complete settings] ➞ **[Cabinet I/O functions]** ➞ **[Circuit breaker]**

About This Menu

This menu is used to control the circuit breaker behavior

This menu can be accessed on ATV660 or ATV680, equipped with Cabinet IO, and if **[Access Level]** LAC is set to **[Expert]** EPr .

[CB start pulse activated] CbEP

Circuit breaker start pulse assignment

Setting	Code / Value	Description
[R61 Assignment]...**[R66 Assignment]**	r61...r66	Cabinet I/O relays outputs

[CB stop pulse activated] CbdP

Circuit breakers stop pulse assignment

Setting	Code / Value	Description
[R61 Assignment]...**[R66 Assignment]**	r61...r66	Cabinet I/O relays outputs

[CB status] Cbs

Circuit breaker status

If **[CB start pulse activated]** CbEP and **[CB stop pulse activated]** CbdP are not configured the **[CB Invalid Config]** CbC1 status is displayed. Both values must be set in order to configure the circuit breaker.

The **[CB stop disable]** Cbsd status is displayed until **[CB Disable stop delay]** Cbt5 is reached.

Setting	Code / Value	Description
[CB Not Configured]	no	Circuit breaker not configured
[CB Invalid Config]	CbC1	Circuit breaker invalid configuration
[CB In Start Pulse]	Cbst	Circuit breaker in start pulse
[CB Not Closed]	CbnC	Circuit breaker not closed
[CB Open]	Cbos	Circuit breaker in open
[CB In Stop Pulse]	CbsP	Circuit breaker in stop pulse
[CB Not Open]	Cbno	Circuit breaker not open
[CB Closed]	CbCs	Circuit breaker closed
[CB stop disable]	Cbsd	Circuit breaker stop is disable

[CB start pulse time] Cbt1

Circuit Breaker start pulse time.

Setting	Description
0.1...60.0 s	Setting range **Factory setting**: 0.5 s

[CB stop pulse time] CbE2

Circuit Breaker stop pulse time.

Identical to **[CB start pulse time]** CbE1

[CB Switch-on delay] CbE3

Circuit Breaker Switch-on delay.

This parameter is used to set a minimal delay between a star pulse and a stop pulse.

Identical to **[CB start pulse time]** CbE1

[CB Switch-off delay] CbE4

Circuit Breaker Switch-off delay.

This parameter is used to set a minimal delay between a stop pulse and a start pulse.

Identical to **[CB start pulse time]** CbE1

[CB Disable stop delay] CbE5

Circuit Breaker Disable stop delay.

Setting	Description
0.0...360.0 s	Setting range **Factory setting**: 60.0 s

[CB Error Resp] CbSr

The Circuit breaker gives the possibility to manage 2 levels of monitoring:

- A Warning level: the drive triggers an event without stopping the application.
- An Error level: the drive triggers an event and stops the application.
  If after a start command, no voltage is detected after the **[Mains V. time out]** LCt, the **[CB Error Resp]** CbSr is triggered and the **[CB Not Closed]** CbnC status is displayed.
  If after a stop command, the voltage is still detected after **[Mains V. time out]** LCt, the **[CB Error Resp]** CbSr is triggered and the **[CB Not Open]** Cbno status is displayed.

Setting	Code / Value	Description
[Error]	FLt	The drive stops the application **Factory setting**
[Warning]	WAr	A warning is triggered and the drive remains in operation enable.

[Cabinet I/O functions] CAbF - menu

Access

[Complete Settings] ➜ **[Cabinet I/O functions]**

[Cabinet I/O 24V Timeout] P24d

Cabinet I/O 24V missing warning

Settings	Description
[No]	Warning disabled.
1...3000 s	Delay before triggering a **[Cab I/O 24V Warn]** P24d warning **Factory setting**: 3 s

Chapter 9
[Communication] COM -

Introduction

[Communication] COM - menu presents the fieldbus submenus.

What Is in This Chapter?

This chapter contains the following topics:

Topic	Page
[Modbus Fieldbus] Md1 - Menu	580
[Com. scanner input] iCS - Menu	582
[Com. scanner output] oCS - Menu	583
[Modbus HMI] Md2 - Menu	584
[Embd Eth Config] EtE - Menu	585
[Fast Device Replacement] Fdr - Menu	586
[Eth Module Config] Eto - Menu	588
[CANopen] Cno - Menu	588
[DeviceNet] dnC - Menu	588
[BACnet MS/TP] bACM - Menu	588
[Profibus] PbC - Menu	588
[Profinet] PnC - Menu	588
[Powerlink] EPL - Menu	589

[Modbus Fieldbus] Md1 - Menu

Access

[Communication] ➡ [Comm parameters] ➡ [Modbus SL] ➡ [Modbus Fieldbus]

About This Menu

This menu is related to the Modbus serial communication port on the bottom of the control block.

Refer to the Modbus serial manual.

[Modbus Address] Add

Drive Modbus address.

Setting	Description
[OFF] oFF ...247	Setting range **Factory setting**: [OFF] oFF

[Modbus add Com.C.] AMoC

Modbus adress of COM option board

This parameter can be accessed if an Ethernet-IP fieldbus module has been inserted

Setting	Description
[OFF] oFF ...247	Setting range **Factory setting**: [OFF] oFF

[Bd.RateModbus] tbr

Baud rate Modbus.

Setting	Code / Value	Description
[4800 bps]	4K8	4,800 Bauds
[9600 bps]	9K6	9,600 Bauds
[19200 bps]	19K2	19,200 Bauds **Factory setting**
[38.4 Kbps]	38K4	38,400 Bauds

[Term Word Order] tWo ★

Terminal Modbus: word order.

This parameter can be accessed if **[Access Level]** LAC is set to **[Expert]** EPr.

Setting	Code / Value	Description
[OFF]	oFF	Low word first
[ON]	on	High word first **Factory setting**

[Modbus Format] tFo

Modbus communication format.

Setting	Code / Value	Description
[8-O-1]	8o1	8 bits odd parity 1 stop bit
[8-E-1]	8E1	8 bits even parity 1 stop bit **Factory setting**
[8-N-1]	8n1	8 bits no parity 1 stop bit
[8-N-2]	8n2	8 bits no parity 2 stop bits

[Modbus Timeout] ttO

Modbus timeout.

Setting	Description
0.1 ...30.0 s	Setting range **Factory setting**: 10.s

[Mdb Com Stat] COM1

Modbus communication status.

Setting	Code / Value	Description
[r0t0]	r0t0	Modbus no reception, no transmission
[r0t1]	r0t1	Modbus no reception, transmission
[r1t0]	r1t0	Modbus reception, no transmission
[r1t1]	r1t1	Modbus reception and transmission

[Com. scanner input] iCS - Menu

Access

[Communication] ➞ [Comm parameters] ➞ [Modbus SL] ➞ [Modbus Fieldbus] ➞ [Com. scanner input]

[Scan. IN1 address] nMA1

Address of the first input word.

Setting	Description
0...65535	Setting range **Factory setting**: 3201 (EtA)

[Scan. IN2 address] nMA2

Address of the second input word.

Setting	Description
0...65535	Setting range **Factory setting**: 8604 (rFrd)

[Scan. IN3 address] nMA3

Address of the third input word.

Setting	Description
0...65535	Setting range **Factory setting**: 0

[Scan. IN4 address] nMA4

Address of the fourth input word.

Identical to **[Scan. IN3 address]** nMA3.

[Scan. IN5 address] nMA5

Address of the fifth input word.

Identical to **[Scan. IN3 address]** nMA3.

[Scan. IN6 address] nMA6

Address of the sixth input word.

Identical to **[Scan. IN3 address]** nMA3.

[Scan. IN7 address] nMA7

Address of the seventh input word.

Identical to **[Scan. IN3 address]** nMA3.

[Scan. IN8 address] nMA8

Address of the eighth input word.

Identical to **[Scan. IN3 address]** nMA3.

[Com. scanner output] oCS - Menu

Access

[Communication] → [Comm parameters] → [Modbus SL] → [Modbus Fieldbus] → [Com. scanner output]

[Scan.Out1 address] nCA1

Address of the first output word.

Setting	Description
0...65535	Setting range **Factory setting**: 8501(CMd)

[Scan.Out2 address] nCA2

Address of the second output word.

Setting	Description
0...65535	Setting range **Factory setting**: 8602(LFrd)

[Scan.Out3 address] nCA3

Address of the third output word.

Setting	Description
0...65535	Setting range **Factory setting**: 0

[Scan.Out4 address] nCA4

Address of the fourth output word.

Identical to **[Scan.Out3 address]** nCA3.

[Scan.Out5 address] nCA5

Address of the fifth output word.

Identical to **[Scan.Out3 address]** nCA3.

[Scan.Out6 address] nCA6

Address of the sixth output word.

Identical to **[Scan.Out3 address]** nCA3.

[Scan.Out7 address] nCA7

Address of the seventh output word.

Identical to **[Scan.Out3 address]** nCA3.

[Scan.Out8 address] nCA8

Address of the eighth output word.

Identical to **[Scan.Out3 address]** nCA3.

[Modbus HMI] Md2 - Menu

Access

[Communication] ➡ **[Comm parameters]** ➡ **[Modbus SL]** ➡ **[Modbus HMI]**

About This Menu

This menu is related to the Modbus serial communication port on the front of the control block. It is used by default for the Graphic Display Terminal. The Graphic Display Terminal is only compliant with the following settings: **[HMI Baud Rate]** tbr2 equal to **[19200 bps]** 19K2, **[Term 2 word order]** tWo2 equal to **[HIGH]** on and **[HMI Format]** tFo2 equal to **[8-E-1]** 8E1.

[HMI Baud Rate] tbr2

Baud rate Modbus.

Setting	Code / Value	Description
[4800 bps]	4K8	4,800 Bauds
[9600 bps]	9K6	9,600 Bauds
[19200 bps]	19K2	19,200 Bauds **Factory setting**
[38.4 Kbps]	38K4	38,400 Bauds

[Term 2 word order] tWo2 ★

Terminal Modbus 2: Word order.

This parameter can be accessed if **[Access Level]** LAC is set to **[Expert]** EPr.

Setting	Code / Value	Description
[LOW]	oFF	Low word first
[HIGH]	on	High word first **Factory setting**

[HMI Format] tFo2

HMI format.

Setting	Code / Value	Description
[8-O-1]	8o1	8.o.1.
[8-E-1]	8E1	8.E.1. **Factory setting**
[8-N-1]	8n1	8.n.1.
[8-N-2]	8n2	8.n.2.

[Mdb com start] Com2

Modbus communication status.

Setting	Code / Value	Description
[r0t0]	r0t0	Modbus no reception, no transmission
[r0t1]	r0t1	Modbus no reception, transmission
[r1t0]	r1t0	Modbus reception, no transmission
[r1t1]	r1t1	Modbus reception and transmission

[Embd Eth Config] EtE - Menu

Access

[Communication] ➡ [Comm parameters] ➡ [Embd Eth Config]

About This Menu

Refer to the Ethernet embedded manual.

[Device Name] PAn

The FDR (Fast Device Replacement) service is based on identification of the device by a “Device Name”. In the case of the Altivar drive, this is represented by the **[Device Name]** *PAn* parameter. Check that all the network devices have different “Device Names”.

[IP Mode Ether. Embd] inDd

IP mode Ethernet embedded.

Setting	Code / Value	Description
[Fixed]	*MAnu*	Fixed address
[BOOTP]	*bootP*	BOOTP
[DHCP]	*dHCP*	DHCP **Factory setting**

[IP address] iCd

IP Address (*iCd1*, *iCd2*, *iCd3*, *iCd4*).

Setting	Description
0...255	Setting range **Factory setting**: 0.0.0.0

[Mask] iMd

Subnet mask (*iMd1*, *iMd2*, *iMd3*, *iMd4*).

Setting	Description
0...255	Setting range **Factory setting**: 0.0.0.0

[Gateway] iGd

Gateway address (*iGd1*, *iGd2*, *iGd3*, *iGd4*).

Setting	Description
0...255	Setting range **Factory setting**: 0.0.0.0

[Fast Device Replacement] F d r - Menu

Access

[Communication] ➞ [Comm parameters] ➞ [Embd Eth Config] ➞ [Fast Device Replacement]

About This Menu

This menu can be accessed if **[IP mode Ether. Embd]** i n O O is set to **[DHCP]** d H C P.

[Enable FDR] F d V O

Enable FDR function.

Setting	Code / Value	Description
[No]	n o	FDR service disabled **Factory setting**
[Yes]	Y E S	FDR service enabled

[FDR Action] F d A O

FDR action.

Setting	Code / Value	Description
[Not active]	i d L E	No FDR action **Factory setting**
[Save]	S A V E	FDR save command
[Rest]	r E S t	FDR restore command

[FDR Operating State] F d S O

FDR operating state.

Setting	Code / Value	Description
[Initialization]	i n i t	Initialization
[Not active]	i d L E	Function not active **Factory setting**
[Operational]	o P E	Operational
[Ready]	r E A d Y	Ready
[IP Configuration]	i P C	IP configuration
[Not Configured]	u n C F	Function not configured
[Reading Configuration]	G E t	Download the current configuration
[Writing Configuration]	S E t	Save the current configuration
[Applying Configuration]	A P P	Applying the configuration to the drive

[FDR Error Status] F d r O

FDR error status.

Setting	Code / Value	Description
[No Error]	n o	No error **Factory setting**
[Server Timeout]	t o u t	Server timeout
[Server No File]	S n F	No file on server
[Server Corrupt File]	C r P t	Invalid file on server
[Server Empty File]	E P t Y	Empty file on server

Setting	Code / Value	Description
[Drive Invalid File]	HinV	Invalid file on drive
[CRC Error]	CrC	CRC error
[Version Incompatibility]	VrM	Version incompatibility between drive and file
[Drive No File]	HnF	No file on
[Server Reading Size]	SizE	File size reading error on server
[Drive Opening File]	oPEn	drive can not open the file
[Drive Reading File]	rEAd	drive can not read the file
[Incompatibility]	SCnt	File incompatibility
[Drive Invalid Name]	ninV	drive name is invalid
[Server Incorrect File Size]	FSiZ	Incorrect file size on server
[Drive Writing File]	HWF	drive can not write the file
[Server Writing File]	SWF	Server can not write the file

[Eth Module Config] E t o - Menu

Access

[Communication] ➞ [Comm parameters] ➞ [Eth Module Config]

About This Menu

Refer to the Ethernet-IP Modbus TCP fieldbus module manual.

[CANopen] C n o - Menu

Access

[Communication] ➞ [Comm parameters] ➞ [CANopen]

About This Menu

Refer to the CANopen fieldbus module manual.

[DeviceNet] d n C - Menu

Access

[Communication] ➞ [Comm parameters] ➞ [DeviceNet]

About This Menu

Refer to the DeviceNet fieldbus module manual.

[BACnet MS/TP] b A C n - Menu

Access

[Communication] ➞ [Comm parameters] ➞ [BACnet MS/TP]

About This Menu

Refer to the BACnet MS/TP fieldbus module manual.

[Profibus] P b C - Menu

Access

[Communication] ➞ [Comm parameters] ➞ [Profibus]

About This Menu

Refer to the Profibus DP fieldbus module manual.

[Profinet] P n C - Menu

Access

[Communication] ➞ [Comm parameters] ➞ [Profinet]

About This Menu

Refer to the PROFINET fieldbus module manual.

[Powerlink] *E P L* - Menu

Access

[Communication] ➡ [Comm parameters] ➡ [Powerlink]

About This Menu

Following parameters can be access if Powerlink module (VW3A3619) has been inserted.Refer to the Powerlink communication manual.

Chapter 10
[File management] F Π E -

Introduction

[File management] F Π E - menu presents the management of drive configuration files.

What Is in This Chapter?

This chapter contains the following topics:

Topic	Page
[Transfer config file] t C F - Menu	592
[Factory settings] F C S - Menu	592
[Parameter group list] F r Y - Menu	593
[Factory settings] F C S - Menu	594
[Pre-settings] P r E S - Menu	595
[Firmware update diag] F W u d - Menu	596
[Identification] o i d - Menu	598
[Package version] P F V - Menu	598
[Firmware update] F W u P - Menu	599

[Transfer config file] tCF - Menu

Access

[File management] ➡ [Transfer config file]

[Copy to the drive] oPF

This allows to select a previously saved drive configuration from the Graphic Display Terminal memory and transfer it to the drive.

The drive needs to be restarted after a configuration file transfer.

[Copy from the drive] SAF

This allows to save the actual drive configuration into the Graphic Display Terminal memory.

NOTE: The Graphic Display Terminal can store up to 16 configuration files.

[Factory settings] FCS - Menu

Access

[File management] ➡ [Factory settings]

About This Menu

This parameter allows to select the configuration to restore in case of factory setting operation.

[Config. Source] FCS ★

Setting	Code / Value	Description
[Macro-Conf]	InI	Factory setting parameter set **Factory setting**
[Config 1]	CFG1	Customer parameter set 1
[Config 2]	CFG2	Customer parameter set 2
[Config 3]	CFG3	Customer parameter set 3

[Parameter group list] FrY - Menu

Access

[File management] ➡ **[Factory settings]** ➡ **[Parameter group list]**

About This Menu

Selection of menus to be loaded.

NOTE: In factory configuration and after a return to "factory settings", **[Parameter group list]** FrY will be empty.

[All] ALL

All parameters in all menus.

[Drive Configuration] drM

Load **[Complete settings]** CSt - menu.

[Motor Param] Mot

Load **[Motor parameters]** MPA - menu.

[Comm. Menu] CoM ★

Load **[Communication]** CoM - menu.

This parameter can be accessed if **[Config. Source]** FCS1 is set to **[Macro-Conf]** In1.

[Display Config.] di5 ★

Load **[Display screen type]** MSC - menu.

This parameter can be accessed if **[Config. Source]** FCS1 is set to **[Macro-Conf]** In1.

[Factory settings] FCS - Menu

Access

[File management] ➡ [Factory settings]

[Go to Factory settings] GFS

⚠ WARNING
UNANTICIPATED EQUIPMENT OPERATION
Verify that restoring the factory settings is compatible with the type of wiring used.
Failure to follow these instructions can result in death, serious injury, or equipment damage.

It is only possible to revert to the factory settings if at least one group of parameters has previously been selected.

[Save Configuration] SCS ★

Save configuration.

The active configuration to be saved does not appear for selection. For example, if it is **[Config 0]** SCF0, only **[Config 1]** SCF1, **[Config 2]** SCF2 and **[Config 3]** SCF3 appear. The parameter changes back to**[No]** nO as soon as the operation is complete.

Setting	Code / Value	Description
[No]	nO	No **Factory setting**
[Config 0]	SCF0	Store customer parameter set 0
[Config 1]	SCF1	Store customer parameter set 1
[Config 2]	SCF2	Store customer parameter set 2
[Config 3]	SCF3	Store customer parameter set 3

[Pre-settings] PrE5 - Menu

Access

[File management] ➞ [Factory settings] ➞ [Pre-settings]

About This Menu

ATV660 and ATV680 give possibility to defined pre-settings for drive parameters.

It allows pre configuration and protection from modifications of:
- Drive functions
- Cabinet I/O functions

This pre-setting is done during the manufacturing of the drive system.

[Pre-settings Status] P5S

Drive Systems pre-settings status.

Setting	Code / Value	Description
[Not locked]	nACt	Pre-setting configuration is not locked. Parameters defined in the pre-setting list can be modified
[Locked]	Act	Pre-setting configuration is locked. Parameters defined in the pre-setting list cannot be modified

[Pre-settings Unlock] P5rt

Drive Systems pre-settings unlock.

This parameter can be used, by a Schneider Electric representative, to unlock the pre-setting configuration.

Setting	Description
0...65535	Setting range **Factory setting**: 0

[Firmware update diag] FWud - Menu

Access

[File management] ➡ [Firmware update] ➡ [Firmware update diag]

About This Menu

This menu can be accessed in expert mode.

[Firmware Update Status] FWSt

Setting	Code / Value	Description
[Inactive]	CHECK	Firmware update inactive
[PwrUpd in progress]	PoWEr	Power update in progress
[PwrUpd Pending]	PEnd	Power update pending
[Ready]	rdy	Firmware update ready
[Inactive]	no	Firmware update inactive
[Succeeded]	SuCCd	Firmware update succeeded
[Update Error]	FAiLEd	Update error
[In Progress]	PrOG	Firmware update in progress
[Requested]	r9Std	Firmware update requested
[Transfer In Progress]	trLd	Transfer in progress
[Transfer Done]	troK	Transfer done
[Package cleared]	CLEAr	Package cleared
[Warning]	SuCWr	Firmware update succeeded with warnings
[Drive State Error]	FLStA	Drive state error
[Package Error]	FLPKG	Package error
[Saving conf]	SAVE	Firmware update is saving the current configuration
[Post Script]	PoSt	Firmware update is doing the post FWUPD

[Firmware Update Error] FWEr

Setting	Code / Value	Description
[No Error]	no	No error
[Lock Error]	LoCK	Lock error
[Package Error]	MdS	Package error
[Package compatibility error]	CoMP	Package compatibility error
[Ask error]	ASK	Ask error
[Reset Drive Error]	rESEt	Reset drive error
[Conf Saving Warning]	SAVE	Configuration saving warning
[Conf Loading Warning]	LoAd	Configuration loading warning
[Post Script Warning]	SCP	Post script warning
[Package Description Error]	dES	Package description error
[Package not found]	PKG	Package not found
[Power Supply error]	SPWr	Power supply error
[Boot M3 error]	btM3	Boot M3 error

Setting	Code / Value	Description
[Boot C28 error]	bEC28	Boot C28 error
[M3 Error]	M3	M3 error
[C28 error]	C28	C28 error
[CPLD error]	CPLd	CPLD error
[Boot Power Error]	PWr	Boot power error
[Emb. Eth Boot Error]	EMbE	Embedded ethernet boot error
[Emb. Eth Error]	EM iL	Embedded ethernet error
[Emb. Eth Web Error]	EMWb	Embedded ethernet WebServer error
[Module Eth Boot Error]	oPEbE	Module ethernet boot error
[Module Eth Error]	oPE iL	Module ethernet error
[Module Eth Web Error]	oPEWb	Module ethernet WebServer error
[Password enabled]	PSWd	Password enabled
[Flash Error]	MEM	Flash error
[Package error]	iFo	Package information error

[Identification] o id - Menu

Access

[File management] ➞ [Firmware update] ➞ [Identification]

About This Menu

This is a read-only menu that cannot be configured. It enables the following information to be displayed:

- Drive reference, power rating, and voltage
- Drive software version
- Drive serial number
- Type of option modules present, with their software version
- Graphic Display Terminal type and version

[Package version] PFV - Menu

Access

[File management] ➞ [Firmware update] ➞ [Package version]

About This Menu

This menu can be accessed in expert mode

[Package Type] PKtP

Firmware Update Package Type

Setting	Code / Value	Description
[Product]	Prd	Firware update product package
[Module]	oPt	Firware update option package
[Spare part]	SPr	Firware update spare parts package
[Customized]	Cus	Firware update customized package
[Indus]	ind	Firware update industrialization package

[Package Version] PKVS

Firmware Update Package Version

Setting	Description
0...65,535	Setting range **Factory setting**: _

[Firmware update] FWuP - Menu

Access

[File management] ➡ [Firmware update]

About This Menu

This menu can be accessed in expert mode.

[Update Firmware] FWAP

Firmware Update Application.

Setting	Code / Value	Description
[No]	nO	No **Factory setting**
[Yes]	YES	Yes

[Abort Firmware Update] FWCL

Firmware Update Clear.

Setting	Code / Value	Description
[No]	nO	No **Factory setting**
[Yes]	YES	Yes

Chapter 11
[My preferences] *П У Р -*

Introduction

[My preferences] *П У Р -* menu presents the possible settings for the user-defined HMI and parameter access.

What Is in This Chapter?

This chapter contains the following sections:

Section	Topic	Page
11.1	**[Language]**	602
11.2	**[Password]**	603
11.3	**[Parameter access]**	605
11.4	**[Customization]**	608
11.5	**[Date & Time settings]**	611
11.6	**[Access level]**	612
11.7	**[Webserver]**	613
11.8	**[Functions key mgnt]**	614
11.9	**[LCD settings]**	615
11.10	**[Stop and go]**	616
11.11	**[QR code]**	618
11.12	**[QR code]** - **[My link 1]**	619
11.13	**[QR code]** - **[My link 2]**	620
11.14	**[QR code]** - **[My link 3]**	621
11.15	**[QR code]** - **[My link 4]**	622
11.16	**[Pairing password]**	623

Section 11.1
[Language]

[Language] L n G - Menu

Access

[My preferences] ➡ [Language]

About This Menu

This menu allows to select the Graphic Display Terminal language.

Section 11.2
[Password]

[Password] C o d - Menu

Access

[My preferences] ➡ **[Password]**

About This Menu

Enables the configuration to be protected with an access code or a password to be entered in order to access a protected configuration:

- The drive is unlocked when the password is set to **[No password defined]** n o or when the correct password has been entered. All menus can be accessed.
- Before protecting the configuration with a password, you must:
  - Define the **[Upload rights]** u L r and **[Download rights]** d L r.
  - Make a careful note of the password and keep it in a place where you are able to find it.

Locking the drive modifies the menu access. If the password is locked:

- **[My Menu]** M Y M n - menu (in **[Simply Start]** S Y S - menu) remains visible if not empty,
- **[Dashboard]** d S H -, **[Diagnostics]** d I A - and **[Display]** M o n - menus remain visible with the read-only parameters. Sub-menus with settable parameters are not visible.
- **[Complete Settings]** C S t - and **[Communication]** C o M - menus are not visible,
- **[Transfer config file]** t C F - menu (in **[File Management]** F M t - menu) remains visible.
- in the **[My preferences]** M Y P - menu, remains visible:
  - **[Language]** L n G,
  - **[Password]** C o d - menu,
  - **[Display screen Type]** M S C - menu (in **[Customization]** C u S - menu),
  - **[Date & Time settings]** r t C,
  - **[Access Level]** L A C, and
  - **[LCD settings]** C n L - menu.

[Password status] P S S t

Password status.

Read only parameter.

Setting	Code / Value	Description
[No password defined]	n o	No password defined **Factory setting**
[Password is unlocked]	u L	Password is unlocked
[Password is locked]	L o C	Password is locked

[Password] P W d

6-characters password.To lock the drive, define and enter your password. **[Password status]** P S S t value switches to **[Password is locked]** L o C.

To unlock the drive, the password must be entered. Once the correct code has been entered, the drive is unlocked and [**[Password status]** P S S t value switches to **[Password is unlocked]** u L. Access will be locked again the next time the drive is switched on.

To modify the password, unlock the drive then enter the new password. Entering a new password locks the drive.

To remove the password, the drive must be unlocked and the password 000000 must be entered. [**[Password status]** P S S t value switches to **[No password defined]** n o. At next switch-on, the drive remains unlocked.

[Upload rights] uLr

Upload rights.

Setting	Code / Value	Description
[Permitted]	uLr 0	Commissioning tools or the Graphic Display Terminal can save the whole configuration (password, monitoring, configuration) **Factory setting**
[Not allowed]	uLr 1	Commissioning tools or the Graphic Display Terminal cannot save the configuration if the drive is not protected by a password or if the in-correct password has been entered

[Download rights] dLr

Download rights.

Setting	Code / Value	Description
[Locked drv]	dLr 0	Lock drive: the configuration can be downloaded to the drive only if the drive is protected by a password, which is the same as the password of the configuration to be downloaded
[Unlock. drv]	dLr 1	Unlock drive: the configuration can be downloaded to the drive or a configuration can be modified if the drive is unlocked or is not protected by a password **Factory setting**
[Not allowed]	dLr 2	The configuration cannot be downloaded
[Lock/unlock]	dLr 3	Combination of **[Locked drv]** dLr 0 and **[Unlock. drv]** dLr 1

Section 11.3
[Parameter access]

What Is in This Section?

This section contains the following topics:

Topic	Page
[Restricted channels] PCd - Menu	606
[Restricted param] PPA - Menu	606
[Visibility] V ,S - Menu	607

[Restricted channels] PCd - Menu

Access

[My preferences] ➞ [Parameter access] ➞ [Restricted access] ➞ [Restricted channels]

About This Menu

Following channels can be selected to disable the accessibility to the related parameters.

[HMI] Con

Graphic Display Terminal.

[PC Tool] PWS

DTM-based commissioning software.

[Modbus] Mdb

Embedded Modbus serial.

[CANopen] CAn

CANopen fieldbus module.

[Com. Module] nEt

Fieldbus option module.

[Restricted param] PPA - Menu

Access

[My preferences] ➞ [Parameter access] ➞ [Restricted access] ➞ [Restricted param]

About This Menu

In these screens, all parameters in the **[Complete settings]** CSt - menu can be protected and are displayed for selection, except for the Expert parameters.

Press the **All** key to select all the parameters. Press the **None** key again to deselect all the parameters.

Content of the **[Complete settings]** CSt - menu. No selections can be made in this screen if there are no parameters.

[Visibility] V I S - Menu

Access

[My preferences] ➞ [Parameter access] ➞ [Visibility]

About This Menu

Selection to display all parameters or only the active parameters.

[Parameters] P V I S

Parameters.

Setting	Code / Value	Description
[Active]	A C t	Only active parameters can be accessed **Factory setting**
[All]	A L L	All parameters can be accessed

Section 11.4
[Customization]

What Is in This Section?

This section contains the following topics:

Topic	Page
[My menu config.] *MYC* - Menu	609
[Display screen type] *MSC* - Menu	609
[Param. Bar Select] *PbS* - Menu	609
[Customer parameters] *CYP* - Menu	610
[Service message] *SEr* - Menu	610

[My menu config.] Π Y C - Menu

Access

[My preferences] ➞ **[Customization]** ➞ **[My menu config.]**

About This Menu

This menu allows to customize the **[My Menu]** Π Y Π n - menu *(see page 55)*.

[Parameter Selection] u Π P

Content of the **[Complete settings]** C S t - menu.

No selection can be made in this screen if there are no parameters.

[Selected List] u Π L

This menu allows to sort the selected parameters.

[My Menu] Π Y Π n

Used to define the name of the customized menu.

[Display screen type] Π S C - Menu

Access

[My preferences] ➞ **[Customization]** ➞ **[Display screen type]**

About This Menu

This parameter allows to select the type of display for the default screen.

[Display value type] Π d t

Type of screen display.

Setting ❮❯	Code / Value	Description
[Digital]	d E C	Digital values **Factory setting**
[Bar graph]	b A r	Bar graph
[List]	L i S t	List of values
[Vu Meter]	V u Π E t	Vu meter

[Parameter Selection] Π P C

Customized selection.

This view allows to select the parameters to display on the default screen.

[Param. Bar Select] P b S - Menu

Access

[My preferences] ➞ **[Customization]** ➞ **[Param. Bar Select]**

About This Menu

This view allows to select the parameters to display on the top line of the Graphic Display Terminal screen.

[Customer parameters] CYP - Menu

Access

[My preferences] ➡ [Customization] ➡ [Customer parameters]

About This Menu

This menu allows to rename up to 15 parameters.

[Parameter Selection] SCP

Parameter selection.

This view allows to select up to 15 parameters.

[Custom Selection] CPN

Customized selection.

This view allows to set for each selected parameter:

- The name
- The unit if relevant (a custom unit is available)
- A multiplier (1...1000) if relevant
- A divisor (1...1000) if relevant
- An offset (-99.00...99.00) if relevant

[Service message] SEr - Menu

Access

[My preferences] ➡ [Customization] ➡ [Service message]

About This Menu

This menu allows to define a user-defined service message (5 lines, 23 digits per line).

This message can be displayed in **[theDiagnostics]** diA -, **[Diag. data]** ddt - menu and **[Service message]** SEr - submenus.

[LINE 1] SNL01

Line 1.

[LINE 2] SNL02

Line 2.

[LINE 3] SNL03

Line 3.

[LINE 4] SNL04

Line 4.

[LINE 5] SNL05

Line 5.

Section 11.5
[Date & Time settings]

[Date/time settings] r t C - Menu

Access

[My preferences] ➡ [Date/time settings]

About This Menu

This view allows to set date and time. This information is used for the time stamping of all logged data.

If a time server is connected over Ethernet and configured in the webserver, date and time data are updated automatically according to the configuration.

Date and time information shall be available (time server available and configured, or Graphic Display Terminal plugged) at drive power up to enable the time stamping of the logged data.

Modifying these settings will modify previously logged data value in case of average data based on time.

Section 11.6
[Access level]

[Access level] L A C - Menu

Access

[My preferences] ➞ **[Access level]**

[Access Level] L A C

Level of access control.

Setting ❮❯	Code / Value	Description
[Basic]	b A S	Access to the **[Simply start]** S Y S -, **[Dashboard]** d S H -, **[Diagnostics]** d I A -, **[File management]** F M t - and **[My preferences]** M Y P - menus only.
[Standard]	S t d	Access to all menus. **Factory setting**
[Expert]	E P r	Access to all menus and to additional parameters.

Section 11.7
[Webserver]

[Webserver] Wb5 - Menu

Access

[My preferences] ➞ [Webserver]

About This Menu

This menu allows to manage Web services.

[EnableWebserver] EWEE

Enable Web services for the embedded Ethernet adapter.

Setting	Code / Value	Description
[No]	no	Webserver disabled
[Yes]	YES	Webserver enabled **Factory setting**

[EnableWebserver] EWE ★

Enable Web services for the Ethernet based modules.

This parameter can be accessed if Ethernet-IP or PROFINET fieldbus module has been inserted.

Setting	Code / Value	Description
[No]	no	Webserver disabled
[Yes]	YES	Webserver enabled **Factory setting**

[Reset EmbWeb] rWPE

Reset the embedded Ethernet webserver to its default configuration.

Setting ❮❯	Code / Value	Description
[No]	no	No **Factory setting**
[Yes]	YES	Yes

[Reset OptWeb Passwd] rWPo ★

Reset the password of the Ethernet-IP Modbus TCP fieldbus module webserver.

This parameter can be accessed if Ethernet-IP Modbus TCP fieldbus module has been inserted.

Setting ❮❯	Code / Value	Description
[No]	no	No **Factory setting**
[Yes]	YES	Yes

[Webserver default password] WdP

8-digits password. A unique password is provided and must be entered at the first connection of the webserver in order to have access to the administrator accout (username = `ADMIN`).

Section 11.8
[Functions key mgnt]

[Functions key mgnt] FKG - Menu

Access

[My preferences] ➞ **[Functions key mgnt]**

About This Menu

This menu allows to assign functions to the Graphic Display Terminal function keys.

[F1 key assignment] Fn1

Function key 1. Following possible assignments cannot be accessed in **[I/O profile]** IO configuration.

Setting	Code / Value	Description
[Not assigned]	nO	Not assigned **Factory setting**
[Preset Speed 1]	FPS1	Function key preset speed 1 assignment
[Preset Speed 2]	FPS2	Function key preset speed 2 assignment
[PID Ref Frequency 1]	FPr1	Function key preset PID 1 assignment
[PID Ref Frequency 2]	FPr2	Function key preset PID 2 assignment
[+Speed]	FUSP	Function key faster assignment
[-Speed]	FdSP	Function key slower assignment

[F2 key assignment] Fn2

Function key 2.

Identical to **[F1 key assignment]** Fn1.

[F3 key assignment] Fn3

Function key 3.

Identical to **[F1 key assignment]** Fn1.

[F4 key assignment] Fn4

Function key 4.

Identical to **[F1 key assignment]** Fn1.

Section 11.9
[LCD settings]

[LCD settings] LCnL - Menu

Access

[My preferences] ➞ [LCD settings]

About This Menu

This menu allows to set the Graphic Display Terminal related parameters.

[Screen Contrast] LCSt

Screen contrast setting.

Setting	Description
0...100%	Setting range **Factory setting**: 50%

[Standby] SbY

Stand-by delay.

NOTE: Disabling the automatic standby function of the display terminal backlight will reduce the backlight service time.

Setting	Description
no...10 min	Automatic backlight OFF time **Factory setting**: 10 min

[Display Terminal locked] KLCK

Graphic Display Terminal key locked. Press **ESC** and **Home** keys to Lock manually & unlock the Graphic Display Terminal keys. The **Stop** key remains active when the Graphic Display Terminal is locked.

Setting	Description
no...10 min	Setting range **Factory setting**: 5 min

[Red Backlight] bCKL ★

Graphic Display Terminal red backlight function disabeled in case or an error triggered.

Setting	Code / Value	Description
[No]	no	Red backlight disabled
[Yes]	YES	Red backlight enabled **Factory setting**

Section 11.10
[Stop and go]

[Stop and go] StG - Menu

Access

[My preferences] ➞ **[Stop and go]**

About This Menu

This function is available for drives from frame size 4 to 7. When the function is active, the DC bus voltage is no longer maintained at operational level in order to save energy. When the drive is in energy saving state, the next run command shall be delayed up to 1 second during the DC bus charge.

[Energy Saving Delay] IdLn

Wait time before going to **[Energy Saving]** IdLE mode after motor is stopped.

At power-on, if **[Energy Saving Delay]** IdLn is not set to **[No]** no, the drive goes directly to **[Energy Saving]** IdLE

The value **[No]** no deactivate the function.

Setting	Description
[No] no...32,400 s	Setting range **Factory setting**: no

[Energy Saving Assign] IdLS

Energy saving mode digital input assignment.

At active state rising edge, the drive switches to energy saving state if the motor is stopped without a run command active. A falling edge switch the drive to normal operation.

Setting	Code / Value	Description
[Not Assigned]	no	Not assigned **Factory setting**
[DI1]...**[DI6]**	LI1...LI6	Digital input DI1...DI6
[DI11]...**[DI16]**	LI11...LI16	Digital input DI11...DI16 if VW3A3203 I/O extension module has been inserted
[CD00]...**[CD10]**	Cd00...Cd10	Virtual digital input CMD.0...CMD.10 in **[I/O profile]** Io configuration
[CD11]...**[CD15]**	Cd11...Cd15	Virtual digital input CMD.11...CMD.15 regardless of configuration
[C101]...**[C110]**	C101...C110	Virtual digital input CMD1.01...CMD1.10 with integrated Modbus Serial in **[I/O profile]** Io configuration
[C111]...**[C115]**	C111...C115	Virtual digital input CMD1.11...CMD1.15 with integrated Modbus Serial regardless of configuration
[C201]...**[C210]**	C201...C210	Virtual digital input CMD2.01...CMD2.10 with CANopen® fieldbus module in **[I/O profile]** Io configuration
[C211]...**[C215]**	C211...C215	Virtual digital input CMD2.11...CMD2.15 with CANopen® fieldbus module regardless of configuration
[C301]...**[C310]**	C301...C310	Virtual digital input CMD3.01...CMD3.10 with a fieldbus module in **[I/O profile]** Io configuration
[C311]...**[C315]**	C311...C315	Virtual digital input CMD3.11...CMD3.15 with a fieldbus module regardless of configuration
[C501]...**[C510]**	C501...C510	Virtual digital input CMD5.01...CMD5.10 with integrated Ethernet in **[I/O profile]** Io configuration
[C511]...**[C515]**	C511...C515	Virtual digital input CMD5.11...CMD5.15 with integrated Ethernet regardless of configuration

[Egy Saving Timeout] ıdLt

Energy Saving Timeout.

If the value of the parameter [Egy Saving Timeout] ıdLt is increased, the run command can be delayed for the amount of time set by the parameter **[Egy Saving Timeout]** ıdLt as long as the condition to leave **[Energy Saving]** ıdLE state is not fulfilled (for example, but not limited to, undervoltage or overvoltage of the supply mains).

⚠ WARNING

UNANTICIPATED EQUIPMENT

Verify that the modification of the setting of this parameter does not result in unsafe conditions.

Failure to follow these instructions can result in death, serious injury, or equipment damage.

After **[Egy Saving Timeout]** ıdLt time, if the drive is still in **[Energy Saving]** ıdLE mode, the error **[Egy Saving Exit Error]** ıdLF is triggered

NOTE: The factory setting value is changed to 8 s for ATV680 and ATV6B0.

Setting	Description
1...999 s	Setting range **Factory setting**: 5 s

Section 11.11
[QR code]

[QR code] qr C - Menu

Access

[My preferences] ➞ [QR code]

About This Menu

This menu gives access to a QR Codes on the Graphic Display Terminal.

[QR Code] qCC

Scan of this QR code brings to a landing page on Internet with the information on:
- Technical product datasheet,
- Link for Schneider Electric App available for services.

Section 11.12
[QR code] - [My link 1]

[My link 1] Π Y L 1 - Menu

Access

[My preferences] ➡ [QR code] ➡ [My link 1]

About This Menu

This menu gives access to a QR Code customized with the commissioning software.

[MyLink 1] 9 L 1

Section 11.13
[QR code] - [My link 2]

[My link 2] MYL2 - Menu

Access

[My preferences] ➡ [QR code] ➡ [My link 2]

About This Menu

This menu gives access to a QR Code customized with the commissioning software.

[MyLink 2] YL2

Section 11.14
[QR code] - [My link 3]

[My link 3] MYL 3 - Menu

Access

[My preferences] ➡ [QR code] ➡ [My link 3]

About This Menu

This menu gives access to a QR Code customized with the commissioning software.

[MyLink 3] 9L 3

Section 11.15
[QR code] - [My link 4]

[My link 4] MYL4 - Menu

Access

[My preferences] ➡ [QR code] ➡ [My link 4]

About This Menu

This menu gives access to a QR Code customized with the commissioning software.

[MyLink 4] QL4

Section 11.16
[Pairing password]

[Pairing password] PPI

Access

[My preferences] ➞ **[Pairing password]**

About This Menu

This function can only be accessed in Expert mode.This function is used to detect whenever an option module has been replaced or the software has been modified in any way. When a pairing password is entered, the parameters of the option modules currently inserted are stored. On every subsequent power-up, these parameters are verified and, in the event of a discrepancy, the drive locks in **[Boards Compatibility]** HCF. Before the drive can be restarted, it is necessary to revert to the original situation or reenter the pairing password.

The following parameters are verified:
- The type of option modules.
- The software version of the drive and the option modules.
- The serial number for the control block boards.

[Pairing password] PPI

Operation as a pair password.

Setting	Description
[OFF] oFF...9,999	Setting range **Factory setting**: oFF

The **[OFF]** oFF value signifies that the pairing password function is inactive.

The **[ON]** on value signifies that the pairing password function is active and that a password is required to start the drive in the event of a **[Boards Compatibility]** HCF detected error.

As soon as the password has been entered, the drive is unlocked and the code changes to **[ON]** on.

Part III
Maintenance and diagnostics

What Is in This Part?

This part contains the following chapters:

Chapter	Chapter Name	Page
12	Maintenance	627
13	Diagnostics and Troubleshooting	629

Chapter 12
Maintenance

Maintenance

Limitation of Warranty

The warranty does not apply if the product has been opened, except by Schneider Electric services.

Servicing

⚠⚠ DANGER

HAZARD OF ELECTRIC SHOCK, EXPLOSION OR ARC FLASH

Read and understand the instructions in **Safety Information** chapter before performing any procedure in this chapter.

Failure to follow these instructions will result in death or serious injury.

The temperature of the products described in this manual may exceed 80 °C (176 °F) during operation.

⚠ WARNING

HOT SURFACES

- Ensure that any contact with hot surfaces is avoided.
- Do not allow flammable or heat-sensitive parts in the immediate vicinity of hot surfaces.
- Verify that the product has sufficiently cooled down before handling it.
- Verify that the heat dissipation is sufficient by performing a test run under maximum load conditions.

Failure to follow these instructions can result in death, serious injury, or equipment damage.

⚠ WARNING

INSUFFICIENT MAINTENANCE

Verify that the maintenance activities described below are performed at the specified intervals.

Failure to follow these instructions can result in death, serious injury, or equipment damage.

Adherence to the environmental conditions must be ensured during operation of the drive. In addition, during maintenance, verify and, if appropriate, correct all factors that may have an impact on the environmental conditions.

	Part concerned	Activity	Interval (1)
Overall condition	All parts such as housing, HMI, control block, connections, etc.	Perform a visual inspection	At least every year
Corrosion	Terminals, connectors, screws, EMC plate	Inspect and clean if required	
Dust	Terminals, fans, enclosures air inlets and air outlets, air filters of cabinet	Inspect and clean if required	
	Floor standing drives filter mats	Inspect	At least every year
		Change	At least every 4 years

(1) Maximum maintenance intervals from the date of commissioning. Reduce the intervals between maintenance to adapt maintenance to the environmental conditions, the operating conditions of the drive, and to any other factor that may influence the operation and/ or maintenance requirements of the drive.

	Part concerned	Activity	Interval (1)
Cooling	Wall mounting drives fan	Verify the fan operation	At least every year
		Replace the fan, see catalog and the instructions sheets on www.schneider-electric.com.	After 3 to 5 years, depending on the operating conditions
	Floor standing drives fan for power part and eclosure door fan	Replace the fans, see catalog and the instructions sheets on www.schneider-electric.com.	Every 35000 operating hours or every 6 years
Fastening	All screws for electrical and mechanical connections	Verify tightening torques	At least every year
(1) Maximum maintenance intervals from the date of commissioning. Reduce the intervals between maintenance to adapt maintenance to the environmental conditions, the operating conditions of the drive, and to any other factor that may influence the operation and/ or maintenance requirements of the drive.			

Spares and Repairs

Serviceable product. Please contact your Customer Care Center on:

www.schneider-electric.com/CCC.

Long Time Storage

If the drive was not connected to mains for an extended period of time, the capacitors must be restored to their full performance before the motor is started.

NOTICE

REDUCED CAPACITOR PERFORMANCE

- Apply mains voltage to the drive for one hour before starting the motor if the drive has not been connected to mains for the following periods of time:
  - 12 months at a maximum storage temperature of +50°C (+122°F)
  - 24 months at a maximum storage temperature of +45°C (+113°F)
  - 36 months at a maximum storage temperature of +40°C (+104°F)
- Verify that no Run command can be applied before the period of one hour has elapsed.
- Verify the date of manufacture if the drive is commissioned for the first time and run the specified procedure if the date of manufacture is more than 12 months in the past.

Failure to follow these instructions can result in equipment damage.

If the specified procedure cannot be performed without a Run command because of internal mains contactor control, perform this procedure with the power stage enabled, but the motor being at standstill so that there is no appreciable mains current in the capacitors.

Fan Replacement

It is possible to order a new fan for the drive maintenance, see the catalog numbers on www.schneider-electric.com.

Customer Care Center

For additional support, you can contact our Customer Care Center on:

www.schneider-electric.com/CCC.

Chapter 13
Diagnostics and Troubleshooting

Overview

This chapter describes the various types of diagnostics and provides troubleshooting assistance.

⚠ ⚠ DANGER

HAZARD OF ELECTRIC SHOCK, EXPLOSION OR ARC FLASH

Read and understand the instructions in **Safety Information** chapter before performing any procedure in this chapter.

Failure to follow these instructions will result in death or serious injury.

What Is in This Chapter?

This chapter contains the following sections:

Section	Topic	Page
13.1	Warning Codes	630
13.2	Error Codes	633
13.3	FAQ	700

Section 13.1
Warning Codes

Warning Codes

List of Available Warnings Messages

Setting	Code	Description
[No Warning stored]	nOA	No warning stored
[Fallback Frequency]	FrF	Reaction on event: Fallback frequency
[Speed Maintained]	rLS	Reaction on event: Speed maintained
[Type of stop]	Stt	Reaction on event: Stop following **[Type of stop]** Stt without triggering an error
[Ref Frequency Warning]	SrA	Frequency reference reached
[Life Cycle Warn 1]	LCA1	Life cycle warning 1 *(see page 561)*
[Life Cycle Warn 2]	LCA2	Life cycle warning 2 *(see page 561)*
[Dry Run Warning]	drYA	Dry run warning *(see page 381)*
[High Flow Warning]	HFPA	High flow warning *(see page 400)*
[InPress Warning]	iPPA	Inlet pressure monitoring warning *(see page 391)*
[Low OutPres Warn]	oPLA	Low outlet pressure warning *(see page 396)*
[High OutPres Warn]	oPHA	High outlet pressure warning *(see page 396)*
[PumpCycle warning]	PCPA	Pumpcycle monitoring warning *(see page 373)*
[Anti-Jam Warning]	JAMA	Anti-jam warning *(see page 375)*
[Pump Low Flow]	PLFA	Pump low flow warning *(see page 384)*
[LowPres Warning]	LPA	Low pressure warning
[Flow Limit activated]	FSA	Flow limitation function is active *(see page 370)*
[PID error Warning]	PEE	PID error warning *(see page 321)*
[PID Feedback Warn]	PFA	PID feedback warning *(see page 314)*
[PID High Fdbck Warn]	PFAH	PID feedback high threshold reached *(see page 314)*
[PID Low Fdbck Warn]	PFAL	PID feedback low threshold reached *(see page 314)*
[Regulation Warning]	PiSH	PID feedback monitoring warning *(see page 336)*
[AI2 Th Warning]	tP2A	AI2 Thermal warning *(see page 188)*
[AI3 Th Warning]	tP3A	AI3 Thermal warning *(see page 188)*
[AI4 Th Warning]	tP4A	AI4 Thermal warning *(see page 188)*
[AI5 Th Warning]	tP5A	AI5 Thermal warning *(see page 188)*
[AI1 4-20 Loss Warning]	AP1	AI1 4-20 mA loss warning *(see page 542)*
[AI2 4-20 Loss Warning]	AP2	AI2 4-20 mA loss warning *(see page 542)*
[AI3 4-20 Loss Warning]	AP3	AI3 4-20 mA loss warning *(see page 542)*
[AI4 4-20 Loss Warning]	AP4	AI4 4-20 mA loss warning *(see page 542)*
[AI5 4-20 Loss Warning]	AP5	AI5 4-20 mA loss warning *(see page 542)*
[Drive Thermal Warning]	tHA	Drive overhearting warning
[IGBT Thermal Warning]	tJA	IGBT thermal state warning
[Fan Counter Warning]	FCtA	Fan counter speed warning *(see page 566)*
[Fan Feedback Warning]	FFdA	Fan feedback warning *(see page 566)*
[Ext. Error Warning]	EFA	External error warning *(see page 538)*
[Undervoltage Warning]	uSA	Undervoltage warning *(see page 549)*
[Preventive UnderV Active]	uPA	Controlled stop threshold is reached *(see page 549)*
[Mot Freq High Thd]	FtA	Motor frequency high threshold 1 reached *(see page 438)*

Setting	Code	Description
[Mot Freq Low Thd]	FtAL	Motor frequency low threshold 1 reached *(see page 438)*
[Mot Freq Low Thd 2]	F2AL	Motor frequency low threshold 2 reached *(see page 438)*
[High Speed Reached]	FLA	High speed reached warning
[Ref Freq High Thd reached]	rtAH	Reference frequency high threshold reached *(see page 439)*
[Ref Freq Low Thd reached]	rtAL	Reference frequency low threshold reached *(see page 439)*
[2nd Freq Thd Reached]	F2A	Motor frequency high threshold 2 reached *(see page 438)*
[Current Thd Reached]	CtA	Motor current high treshold reached *(see page 438)*
[Low Current Reached]	CtAL	Motor current low threshold reached *(see page 438)*
[High Torque Warning]	ttHA	High torque threshold reached *(see page 439)*
[Low Torque Warning]	ttLA	Low torque threshold reached *(see page 439)*
[Process Undld Warning]	uLA	Underload warning *(see page 461)*
[Process Overload Warning]	oLA	Overload warning *(see page 463)*
[Drv Therm Thd reached]	tAd	Drive thermal threshold reached *(see page 554)*
[Motor Therm Thd reached]	tSA	Motor thermal threshold reached *(see page 439)*
[Power High Threshold]	PtHA	Power high threshold reached *(see page 91)*
[Power Low Threshold]	PtHL	Power low threshold reached *(see page 91)*
[Cust Warning 1]	CAS1	Customer warning 1 active *(see page 562)*
[Cust Warning 2]	CAS2	Customer warning 2 active *(see page 563)*
[Cust Warning 3]	CAS3	Customer warning 3 active *(see page 563)*
[Cust Warning 4]	CAS4	Customer warning 4 active *(see page 564)*
[Cust Warning 5]	CAS5	Customer warning 5 active *(see page 564)*
[AFE Mains Undervoltage]	urA	AFE mains undervoltage
[Power Cons Warning]	PoWd	Power consumption warning
[Switch OutPres Warn]	oPSA	Outlet pressure high switch warning *(see page 397)*
[MP Capacity Warn]	nPCA	Multipump available capacity warning *(see page 262)*
[Lead Pump Warn]	nPLA	Lead pump not available warning *(see page 262)*
[High Level Warning]	LCHA	High level warning *(see page 290)*
[Low Level Warning]	LCLA	Low level warning *(see page 290)*
[Level Switch Warning]	LCWA	Level switch warning *(see page 290)*
[MonitorCircuit A Warn]	iWA	Monitoring circuit A warning *(see page 569)*
[MonitorCircuit B Warn]	iWb	Monitoring circuit B warning *(see page 571)*
[MonitorCircuit C Warn]	iWC	Monitoring circuit C warning *(see page 571)*
[MonitorCircuit D Warn]	iWd	Monitoring circuit D warning *(see page 572)*
[CabinetCircuit A Warn]	CWA	Cabinet circuit A warning *(see page 573)*
[CabinetCircuit B Warn]	CWb	Cabinet circuit B warning *(see page 573)*
[CabinetCircuit C Warn]	CWC	Cabinet circuit C warning *(see page 574)*
[MotorWinding A Warn]	tWA	Motor winding A warning *(see page 575)*
[MotorWinding B Warn]	tWb	Motor winding B warning *(see page 575)*
[MotorBearing A Warn]	tWC	Motor bearing A warning *(see page 576)*
[MotorBearing B Warn]	tWd	Motor bearing B warning *(see page 576)*
[Circuit Breaker Warn]	CbW	Circuit breaker warning *(see page 577)*
[Cab I/O 24V Warn]	P24C	Cabinet I/O 24V missing warning
[AFE Motor Limitation]	CLiM	AFE motor limitation *(see page 459)*
[AFE Generator Limitation]	CLiG	AFE regen limitation *(see page 459)*
[AFE Sensor thermal state]	tHSA	AFE thermal state warning
[AFE IGBT thermal state]	tHJA	AFE IGBT thermal warning

Setting	Code	Description
[Cabinet Fan Fdbck Warn]	FFCA	Cabinet fan feedback warning *(see page 566)*
[Cabinet Fan Counter Warn]	FCCA	Cabinet fan counter warning *(see page 566)*
[Cabinet Overheat Warn]	CHA	Cabinet overheat warning
[CMI Jumper Warn]	CMiJ	CMI jumper warning
[AFE Fan Counter Warn]	FCbA	AFE fan counter warning *(see page 566)*
[AFE Fan Fdbck Warn]	FFbA	AFE fan feedback warning *(see page 566)*
[M/P Device Warn]	MPdA	Multipump device warning *(see page 262)*
[Temp Sens AI2 Warn]	tS2A	Temperature sensor AI2 warning (open circuit)
[Temp Sens AI3 Warn]	tS3A	Temperature sensor AI3 warning (open circuit)
[Temp Sens AI4 Warn]	tS4A	Temperature sensor AI4 warning (open circuit)
[Temp Sens AI5 Warn]	tS5A	Temperature sensor AI5 warning (open circuit)
[Bypass Poc Warning 1]	byW1	Bypass Power Cell warning 1
[Bypass Poc Warning 2]	byW2	Bypass Power Cell warning 2

Section 13.2
Error Codes

What Is in This Section?

This section contains the following topics:

Topic	Page
Overview	636
[AFE Modulation Rate Error] ACF 1	637
[AFE Current Control Error] ACF 2	637
[Angle error] A5F	638
[Circuit Breaker Error] CbF	638
[CabinetCircuit A Error] CFA	639
[CabinetCircuit B Error] CFb	639
[CabinetCircuit C Error] CFC	640
[Incorrect Configuration] CFF	640
[Invalid Configuration] CF ı	641
[Conf Transfer Error] CF ı2	641
[Pre-settings Transfer Error] CF ı3	642
[Cabinet Overheat Error] CHF	642
[Fieldbus Com Interrupt] CnF	643
[CANopen Com Interrupt] CoF	643
[Precharge Capacitor] CrF	644
[AFE contactor fdbk error] CrF3	644
[Channel Switch Error] C5F	645
[Dry Run Error] drYF	645
[EEPROM Control] EEF 1	646
[EEPROM Power] EEF2	646
[External Error] EPF 1	647
[Fieldbus Error] EPF2	647
[Embd Eth Com Interrupt] EtHF	648
[Out Contact Closed Error] FCF 1	648
[Out Contact Opened Error] FCF2	649
[FDR 1 Error] Fdr 1	649
[FDR 2 Error] Fdr2	650
[Firmware Update Error] FWEr	650
[Boards Compatibility] HCF	651
[High Flow Error] HFPF	651
[Egy Saving Exit Error] ıdLF	652
[MonitorCircuit A Error] ıFA	652
[MonitorCircuit B Error] ıFb	653
[MonitorCircuit C Error] ıFC	653
[MonitorCircuit D Error] ıFd	654
[Input Overheating] ıHF	654
[Internal Link Error] ıLF	655
[Internal Error 0] ınF0	655
[Internal Error 1] ınF 1	656

Topic	Page
[Internal Error 2] inF2	656
[Internal Error 3] inF3	657
[Internal Error 4] inF4	657
[Internal Error 6] inF6	658
[Internal Error 7] inF7	658
[Internal Error 8] inF8	659
[Internal Error 9] inF9	659
[Internal Error 10] inFA	660
[Internal Error 11] inFb	660
[Internal Error 12] inFC	661
[Internal Error 13] inFd	661
[Internal Error 14] inFE	662
[Internal Error 15] inFF	662
[Internal Error 16] inFG	663
[Internal Error 17] inFH	663
[Internal Error 18] inF I	664
[Internal Error 20] inFK	664
[Internal Error 21] inFL	665
[Internal Error 22] inFn	665
[Internal Error 23] inFn	666
[Internal Error 25] inFP	666
[Internal Error 27] inFr	667
[Internal Error 28] inFS	667
[Internal Error 29] inFt	668
[Internal Error 30] inFu	668
[Internal Error 31] inFV	669
[Inlet Pressure Error] iPPF	669
[Anti Jam Error] JAnF	670
[Input Contactor] LCF	670
[High Level Error] LCHF	671
[Low Level Error] LCLF	671
[AI1 4-20mA loss] LFF1	672
[AI2 4-20mA loss] LFF2	672
[AI3 4-20mA loss] LFF3	673
[AI4 4-20mA loss] LFF4	673
[AI5 4-20mA loss] LFF5	674
[MultiDrive Link Error] ndLF	674
[Mains Freq Out Of Range] nFF	675
[M/P Device Error] nPdF	675
[Lead Pump Error] nPLF	676
[DC Bus Overvoltage] obF	676
[AFE Bus unbalancing] obF2	677
[Overcurrent] oCF	677
[Drive Overheating] oHF	678
[Process Overload] oLC	678
[Motor Overload] oLF	679

Topic	Page
[Single Output Phase Loss] oPF 1	679
[Output Phase Loss] oPF2	680
[Out Pressure High] oPHF	680
[Out Pressure Low] oPLF	681
[Supply Mains Overvoltage] oSF	681
[Cab I/O 24V Error] P24C	682
[PumpCycle Start Error] PCPF	682
[PID Feedback Error] PFnF	683
[Program Loading Error] PGLF	683
[Program Running Error] PGrF	684
[Input phase loss] PHF	684
[Pump Low Flow Error] PLFF	685
[Safety Function Error] SAFF	685
[Motor short circuit] SCF 1	686
[Ground Short Circuit] SCF3	686
[IGBT Short Circuit] SCF4	687
[Motor Short Circuit] SCF5	687
[AFE ShortCircuit error] SCF6	688
[Modbus Com Interruption] SLF 1	688
[PC Com Interruption] SLF2	689
[HMI Com Interruption] SLF3	689
[Motor Overspeed] SoF	690
[Motor Stall Error] StF	690
[AI2 Thermal Sensor Error] tAnF	691
[AI3 Thermal Sensor Error] tbnF	691
[AI4 Thermal Sensor Error] tCnF	692
[AI5 Thermal Sensor Error] tdnF	692
[MotorWinding A Error] tFA	693
[MotorWinding B Error] tFb	693
[MotorBearing A Error] tFC	694
[MotorBearing B Error] tFd	694
[AI2 Th Level Error] tAHF	695
[AI3 Th Level Error] tbHF	695
[AI4 Th Level Error] tCHF	696
[AI5 Th Level Error] tdHF	696
[IGBT Overheating] tJF	697
[AFE IGBT over-heat error] tJF2	697
[Autotuning Error] tnF	698
[Process Underload] uLF	698
[AFE Mains Undervoltage] urF	699
[Supply Mains UnderV] uSF	699

Overview

Clearing the Detected Error

This table presents the steps to follow if intervention on the drive system is required:

Step	Action
1	Disconnect all power, including external control power that may be present.
2	Lock all power disconnects in the open position.
3	Wait 15 minutes to allow the DC bus capacitors to discharge (the drive LEDs are not indicators of the absence of DC bus voltage).
4	Measure the voltage of the DC bus between the PA/+ and PC/- terminals to ensure that the voltage is less than 42 Vdc.
5	If the DC bus capacitors do not discharge completely, contact your local Schneider Electric representative. Do not repair or operate the drive.
6	Find and correct the cause of the detected error.
7	Restore power to the drive to confirm that the detected error has been rectified.

After the cause has been removed, the detected error can be cleared by:

- Switching off the drive.
- Using the **[Product Restart]** rP parameter.
- Using the **[Auto Fault Reset]** AtrS function.
- A digital input or control bit set to the **[Fault reset]** rSt function.
- Pressing the **STOP/RESET** key on the Graphic Display Terminal if the active command channel is set to **[Ref. Freq-Rmt.Term]** LCC.

[AFE Modulation Rate Error] ACF 1

Probable Cause

Mains voltage is on a low limit, the modulation rate of the AFE increases to help protect the DC link capacitors the **[AFE Modulation Rate Error]** ACF 1 is triggered.

Remedy

- Verify mains voltage.
- Verify parameter setting for mains voltage.

Clearing the Error Code

This detected error can be cleared with the **[Auto Fault Reset]** AtR or manually with the **[Fault Reset Assign]** rSF parameter after the cause has been removed.

[AFE Current Control Error] ACF2

Probable Cause

Mains voltage interruption.

Remedy

- Verify mains voltage.
- Reduce number of voltage drop-downs.

Clearing the Error Code

This detected error requires a power reset.

[Angle error] AnF

Probable Cause

For synchronous motors, incorrect setting of the speed loop when the reference goes through 0.

Remedy

- Verify the speed loop parameters.
- Verify the motor phases and the maximum current allowed by the drive.

Clearing the Error Code

This detected error can be cleared manually with the **[Fault Reset Assign]** rSF parameter after the cause has disappeared.

[Circuit Breaker Error] CbF

Probable Cause

The DC bus voltage level is not correct compared to the circuit breaker logic control (start or stop pulse) after the configured timeout **[Mains V. time out]** LCt.

Remedy

- Verify the circuit breaker logic control (pulse time for start and stop).
- Verify the mechanical state of the circuit breaker.

Clearing the Error Code

This detected error requires a power reset.

[CabinetCircuit A Error] CFA

Probable Cause

The monitoring function has detected an error. The digital input assigned to **[CabinetCircuit A Assign]** CFAA is active when the detected error duration is longer than **[CabinetCircuit A Delay]** FdA.

Remedy

- Identify the cause of detection.
- Verify the connected device (door switch, thermal switch,…) and its wiring.
- Verify the **[CabinetCircuit A Assign]** CFAA parameter assignment.

Clearing the Error Code

This detected error can be cleared with the **[Auto Fault Reset]** AtR or manually with the **[Fault Reset Assign]** rSF parameter after the cause has been removed.

[CabinetCircuit B Error] CFb

Probable Cause

The monitoring function has detected an error. The digital input assigned to **[CabinetCircuit B Assign]** CFAb is active when the detected error duration is longer than **[CabinetCircuit B Delay]** Fdb.

Remedy

- Identify the cause of detection.
- Verify the connected device (door switch, thermal switch,…) and its wiring.
- Verify the **[CabinetCircuit B Assign]** CFAb parameter assignment.

Clearing the Error Code

This detected error can be cleared with the **[Auto Fault Reset]** AtR or manually with the **[Fault Reset Assign]** rSF parameter after the cause has been removed.

[CabinetCircuit C Error] CFC

Probable Cause

The monitoring function has detected an error. The digital input assigned to **[CabinetCircuit C Assign]** CFAC is active when the detected error duration is longer than **[CabinetCircuit C Delay]** FdC.

Remedy

- Identify the cause of detection.
- Verify the connected device (door switch, thermal switch,…) and its wiring.
- Verify the **[CabinetCircuit C Assign]** CFAC parameter assignment.

Clearing the Error Code

This detected error can be cleared with the **[Auto Fault Reset]** AtR or manually with the **[Fault Reset Assign]** rSF parameter after the cause has been removed.

[Incorrect Configuration] CFF

Probable Cause

- Option module changed or removed.
- Control block replaced by a control block configured on a drive with a different rating.
- The current configuration is inconsistent.

Remedy

- Verify that there is no detected error on the option module.
- In the event of the control block being changed deliberately, see the remarks below.
- Return to factory settings or retrieve the backup configuration if it is valid.

Clearing the Error Code

This detected error is cleared as soon as its cause has been removed.

[Invalid Configuration] CF 1

Probable Cause

Invalid configuration. The configuration loaded in the drive via the commissioning tool or fieldbus is inconsistent.

Remedy

- Verify the previously loaded configuration.
- Load a compatible configuration.

Clearing the Error Code

This detected error is cleared as soon as its cause has been removed.

[Conf Transfer Error] CF 12

Probable Cause

- The configuration has not been transferred properly.
- The configuration loaded is not compatible with the drive.

Remedy

- Verify the configuration loaded previously.
- Load a compatible configuration.
- Use PC software commissioning tool to transfer a compatible configuration
- Perform a factory setting

Clearing the Error Code

This detected error is cleared as soon as its cause has been removed.

[Pre-settings Transfer Error] CF 13

Probable Cause

The preset configuration has not been transferred properly.

Remedy

Contact your local Schneider Electric representative.

Clearing the Error Code

This detected error is cleared as soon as its cause has been removed.

[Cabinet Overheat Error] CHF

Probable Cause

The cabinet thermal switch is at active state, the cabinet fan(s) has been switched on but there is no fan feedback.

The digital inputs DI50 and DI51 of drives equipped with Cabinet IO are configured as cabinet temperature monitoring. If the enclose thermo switch opens in case of over temperature, the **[Cabinet Overheat Error]** CHF is triggered.

This error can be triggered only in RUN state. On other state, the **[Cabinet Overheat Warn]** CHA is active.

Remedy

- Verify cabinet fan(s) and its wiring.
- Verify the temperature in the enclosure is not too high.
- Verify the setting of the thermoswitch (must be 60°C (140°F))

Clearing the Error Code

This detected error is cleared as soon as its cause has been removed.

[Fieldbus Com Interrupt] CnF

Probable Cause

Communication interruption on fieldbus module.

This error is triggered when the communication between the fieldbus module and the master (PLC) is interrupted.

Remedy

- Verify the environment (electromagnetic compatibility).
- Verify the wiring.
- Verify the timeout.
- Replace the option module.
- Contact your local Schneider Electric representative

Clearing the Error Code

This detected error can be cleared with the **[Auto Fault Reset]** AtrorManually with the **[Fault Reset Assign]** rSF parameter after the cause has been removed.

[CANopen Com Interrupt] CoF

Probable Cause

Communication interruption on the CANopen® fieldbus

Remedy

- Verify the communication fieldbus.
- Verify the timeout.
- Refer to the CANopen® user manual.

Clearing the Error Code

This detected error can be cleared with the **[Auto Fault Reset]** AtrorManually with the **[Fault Reset Assign]** rSF parameter after the cause has been removed.

[Precharge Capacitor] CrF

Probable Cause

- Charging circuit control detected error or charging resistor damaged.

Remedy

- Turn off the drive and then turn on again.
- Verify the internal connections.
- Contact your local Schneider Electric representative

Clearing the Error Code

This detected error requires a power reset.

[AFE contactor fdbk error] CrF3

Probable Cause

- The mains contactor feedback is inactive during DC Bus charging phase.
- The mains contactor feedback becomes inactive without mains phase loss detection while the drive is in operation (Ready or Run state).

Remedy

- Verify the feedback circuit.
- Verify the mechanical state of the mains contactor.

Clearing the Error Code

This detected error requires a power reset.

[Channel Switch Error] C S F

Probable Cause

Switch to a not valid channel.

Remedy

Verify the function parameters.

Clearing the Error Code

This detected error is cleared as soon as its cause has been removed.

[Dry Run Error] d r Y F

Probable Cause

The dry run monitoring function has detected an error.

NOTE: After the error has been triggered, even if the detected error has been cleared, it is not possible to restart the pump before the end of the **[DryRun Restart Delay]** d r Y r .

Remedy

- Verify that the pump is well primed.
- Verify that there is no air leak in the suction line.
- Verify the settings of the monitoring function.

Clearing the Error Code

This detected error can be cleared with the **[Auto Fault Reset]** A t r or manually with the **[Fault Reset Assign]** r S F parameter after the cause has been removed.

[EEPROM Control] *E E F 1*

Probable Cause

An error of the internal memory of the control block has been detected.

Remedy

- Verify the environment (electromagnetic compatibility).
- Switch off the product.
- Return to factory settings.
- Contact your local Schneider Electric representative.

Clearing the Error Code

This detected error requires a power reset.

[EEPROM Power] *E E F 2*

Probable Cause

An error of the internal memory of the power board has been detected.

Remedy

- Verify the environment (electromagnetic compatibility).
- Switch off the product.
- Return to factory settings.
- Contact your local Schneider Electric representative.

Clearing the Error Code

This detected error requires a power reset.

[External Error] EPF 1

Probable Cause

- Event triggered by an external device, depending on user.
- An external error has been triggered via Embedded Ethernet.

Remedy

Remove the cause of the external error.

Clearing the Error Code

This detected error can be cleared with the **[Auto Fault Reset]** AtR or manually with the **[Fault Reset Assign]** rSF parameter after the cause has been removed.

[Fieldbus Error] EPF2

Probable Cause

An external error has been triggered via fieldbus.

Remedy

Remove the cause of the external error.

Clearing the Error Code

This detected error can be cleared with the **[Auto Fault Reset]** AtR or manually with the **[Fault Reset Assign]** rSF parameter after the cause has been removed.

[Embd Eth Com Interrupt] *E E H F*

Probable Cause

Communication interruption on the Ethernet IP ModbusTCP bus.

Remedy

- Verify the communication bus.
- Refer to the Ethernet user manual.

Clearing the Error Code

This detected error can be cleared with the **[Auto Fault Reset]** *A E r* or manually with the **[Fault Reset Assign]** *r S F* parameter after the cause has been removed.

[Out Contact Closed Error] *F C F I*

Probable Cause

The output contactor remains closed although the opening conditions have been met.

Remedy

- Verify the output contactor and its wiring.
- Verify the contactor feedback wiring.

Clearing the Error Code

This detected error requires a power reset.

[Out Contact Opened Error] F C F 2

Probable Cause

The output contactor remains opened although the closing conditions have been met.

Remedy

Verify the output contactor and its wiring. Verify the contactor feedback wiring.

Clearing the Error Code

This detected error can be cleared with the **[Auto Fault Reset]** A t r or manually with the **[Fault Reset Assign]** r S F parameter after the cause has been removed.

[FDR 1 Error] F d r 1

Probable Cause

- Communication interruption between the drive and the PLC
- Configuration file incompatible, empty or invalid.
- Drive rating not consistent with the configuration file

Remedy

- Verify the drive and PLC connection
- Verify the communication workload
- Restart the transfer of configuration file from drive to PLC

Clearing the Error Code

This detected error requires a power reset.

[FDR 2 Error] F d r 2

Probable Cause

- Communication interruption between the drive and the PLC
- Configuration file incompatible, empty or corrupted.
- Drive rating not consistent with the configuration file

Remedy

- Verify the drive and PLC connection
- Verify the communication workload
- Restart the transfer of configuration file from drive to PLC

Clearing the Error Code

This detected error requires a power reset.

[Firmware Update Error] F W E r

Probable Cause

Firmware update function has detected an error.

Remedy

Contact your local Schneider Electric representative.

Clearing the Error Code

This detected error is cleared as soon as its cause has been removed.

[Boards Compatibility] *H C F*

Probable Cause

The **[Pairing password]** *P P ,* parameter has been enabled and an option module has been changed.

Remedy

- Refit the original option module.
- Confirm the configuration by entering the **[Pairing password]** *P P ,* if the module was changed deliberately.

Clearing the Error Code

This detected error is cleared as soon as its cause has been removed.

[High Flow Error] *H F P F*

Probable Cause

The high flow monitoring function has detected an error.

Remedy

- Verify that the system works in its flow capabilities.
- Verify that there is no pipe burst at the outlet of the system.
- Verify the settings of the monitoring function.

Clearing the Error Code

This detected error can be cleared with the **[Auto Fault Reset]** *A t r* or manually with the **[Fault Reset Assign]** *r 5 F* parameter after the cause has been removed.

[Egy Saving Exit Error] ıdLF

Probable Cause

The drive is not turned on even though **[Egy Saving Timeout]** ıdLt has elapsed.

Remedy

- Verify the Supply Mains/contactor/drive wiring.
- Verify the timeout.

Clearing the Error Code

This detected error can be cleared with the **[Auto Fault Reset]** Atr or manually with the **[Fault Reset Assign]** rSF parameter after the cause has been removed.

[MonitorCircuit A Error] ıFA

Probable Cause

The digital input assigned to **[MonitorCircuit A Assign]** ıFAA is active for longer than **[MonitorCircuit A Delay]** ıFdA.

Remedy

- Verify the connected device and its wiring.
- Verify the **[MonitorCircuit A Assign]** ıFAA parameter assignment.

Clearing the Error Code

This detected error can be cleared with the **[Auto Fault Reset]** Atr or manually with the **[Fault Reset Assign]** rSF parameter after the cause has been removed.

[MonitorCircuit B Error] ıFb

Probable Cause

The digital input assigned to **[MonitorCircuit B Assign]** ıFAb is active for longer than **[MonitorCircuit B Delay]** ıFdb.

Remedy

- Verify the connected device and its wiring.
- Verify the **[MonitorCircuit B Assign]** ıFAb parameter assignment.

Clearing the Error Code

This detected error can be cleared with the **[Auto Fault Reset]** AtrP or manually with the **[Fault Reset Assign]** rSF parameter after the cause has been removed.

[MonitorCircuit C Error] ıFC

Probable Cause

The digital input assigned to **[MonitorCircuit C Assign]** ıFAC is active for longer than **[MonitorCircuit C Delay]** ıFdC.

Remedy

- Verify the connected device and its wiring.
- Verify the **[MonitorCircuit C Assign]** ıFAC parameter assignment.

Clearing the Error Code

This detected error can be cleared with the **[Auto Fault Reset]** AtrP or manually with the **[Fault Reset Assign]** rSF parameter after the cause has been removed.

[MonitorCircuit D Error] ıFd

Probable Cause

The digital input assigned to **[MonitorCircuit D Assign]** ıFAd is active for longer than **[MonitorCircuit D Delay]** ıFdd.

Remedy

- Verify the connected device and its wiring.
- Verify the **[MonitorCircuit D Assign]** ıFAd parameter assignment.

Clearing the Error Code

This detected error can be cleared with the **[Auto Fault Reset]** AtR or manually with the **[Fault Reset Assign]** rSF parameter after the cause has been removed.

[Input Overheating] ıHF

Probable Cause

The AFE brick temperature is too high.

Remedy

Verify the drive ventilation and the ambient temperature. Wait for the drive to cool down before restarting.

Clearing the Error Code

This detected error can be cleared with the **[Auto Fault Reset]** AtR or manually with the **[Fault Reset Assign]** rSF parameter after the cause has been removed.

[Internal Link Error] iLF

Probable Cause

Communication interruption between option module and the drive.

Remedy

- Verify the environment (electromagnetic compatibility).
- Verify the connections.
- Replace the option module.
- Contact your local Schneider Electric representative.

Clearing the Error Code

This detected error requires a power reset.

[Internal Error 0] inF0

Probable Cause

Communication interruption between microprocessors of the control board.

Remedy

Contact your local Schneider Electric representative.

Clearing the Error Code

This detected error requires a power reset.

[Internal Error 1] inF 1

Probable Cause

The power board rating is not valid.

Remedy

Contact your local Schneider Electric representative.

Clearing the Error Code

This detected error requires a power reset.

[Internal Error 2] inF 2

Probable Cause

The power board is incompatible with the control block software.

Remedy

Contact your local Schneider Electric representative.

Clearing the Error Code

This detected error requires a power reset.

[Internal Error 3] inF3

Probable Cause

Internal communication detected error.

Remedy

- Verify the wiring on drive control terminals (internal 10V supply for analog inputs overloaded).
- Contact your local Schneider Electric representative.

Clearing the Error Code

This detected error requires a power reset.

[Internal Error 4] inF4

Probable Cause

Internal data inconsistent.

Remedy

Contact your local Schneider Electric representative.

Clearing the Error Code

This detected error requires a power reset.

[Internal Error 6] inF6

Probable Cause

- The option module installed in the drive is not recognized.
- The removable control terminal modules (if existing) are not present or not recognized.
- The embedded Ethernet adapter is not recognized.

Remedy

- Verify the catalog number and compatibility of the option module.
- Plug the removable control terminal modules after the drive has been switched off.
- Contact your local Schneider Electric representative.

Clearing the Error Code

This detected error requires a power reset.

[Internal Error 7] inF7

Probable Cause

Communication interruption with CPLD component of Control board.

Remedy

Contact your local Schneider Electric representative.

Clearing the Error Code

This detected error requires a power reset.

[Internal Error 8] inF8

Probable Cause

The internal power switching supply is not correct.

Remedy

Contact your local Schneider Electric representative.

Clearing the Error Code

This detected error requires a power reset.

[Internal Error 9] inF9

Probable Cause

An error on the current circuit measurement has been detected.

Remedy

Contact your local Schneider Electric representative.

Clearing the Error Code

This detected error requires a power reset.

[Internal Error 10] inFA

Probable Cause

The input stage is not operating correctly.

Remedy

Contact your local Schneider Electric representative.

Clearing the Error Code

This detected error requires a power reset.

[Internal Error 11] inFb

Probable Cause

The internal drive thermal sensor is not operating correctly.

Remedy

Contact your local Schneider Electric representative.

Clearing the Error Code

This detected error can be cleared with the **[Auto Fault Reset]** AtrS or manually with the **[Fault Reset Assign]** rSF parameter after the cause has been removed.

[Internal Error 12] inFC

Probable Cause

Internal current supply error.

Remedy

Contact your local Schneider Electric representative.

Clearing the Error Code

This detected error requires a power reset.

[Internal Error 13] inFd

Probable Cause

Differential current deviation.

Remedy

Verify connection of DigiLink cable (GG45).

Contact your local Schneider Electric representative.

Clearing the Error Code

This detected error requires a power reset.

[Internal Error 14] ınFE

Probable Cause

Internal microprocessor detected error.

Remedy

- Verify that the error code can be cleared.
- Contact your local Schneider Electric representative.

Clearing the Error Code

This detected error requires a power reset.

[Internal Error 15] ınFF

Probable Cause

Serial memory flash format error.

Remedy

Contact your local Schneider Electric representative.

Clearing the Error Code

This detected error requires a power reset.

[Internal Error 16] inFG

Probable Cause

Communication interruption with the Extension module of output relays module or internal error of the Extension module of output relays

Remedy

- Verify that the option module is correctly connected to the slot
- Replace the option module.
- Contact your local Schneider Electric representative.

Clearing the Error Code

This detected error requires a power reset.

[Internal Error 17] inFH

Probable Cause

Communication interruption with the Extension module of digital & analog I/O or internal error of the Extension module of digital & analog I/O.

Remedy

- Verify that the option module is correctly connected to the slot
- Replace the option module.
- Contact your local Schneider Electric representative.

Clearing the Error Code

This detected error requires a power reset.

[Internal Error 18] inF1

Probable Cause

Communication interruption with Safety function module or internal error of the Safety function module.

Remedy

- Verify that the option module is correctly connected to the slot
- Replace the option module.
- Contact your local Schneider Electric representative.

Clearing the Error Code

This detected error requires a power reset.

[Internal Error 20] inFK

Probable Cause

Option module interface board error.

Remedy

Contact your local Schneider Electric representative.

Clearing the Error Code

This detected error requires a power reset.

[Internal Error 21] inFL

Probable Cause

Internal Real Time Clock error. It could be a communication error between the keypad and the drive or a clock oscillator start error.

Remedy

Contact your local Schneider Electric representative.

Clearing the Error Code

This detected error requires a power reset.

[Internal Error 22] inFП

Probable Cause

An error on the embedded Ethernet adapter has been detected.

Unstability of external 24 Vdc supply.

Remedy

Verify the connection to the Ethernet port.

Contact your local Schneider Electric representative.

Verify the 24 Vdc stability.

Clearing the Error Code

This detected error requires a power reset.

[Internal Error 23] ınFn

Probable Cause

A communication interruption between the control block and AFE or BU bricks has been detected.

Remedy

Contact your local Schneider Electric representative.

Clearing the Error Code

This detected error requires a power reset.

[Internal Error 25] ınFP

Probable Cause

Incompatibility between Control Board hardware version and firmware version.

Remedy

- Update the firmware package.
- Contact your local Schneider Electric representative.

Clearing the Error Code

This detected error requires a power reset.

[Internal Error 27] inFr

Probable Cause

Diagnostics in CPLD have detected an error.

Remedy

Contact your local Schneider Electric representative.

Clearing the Error Code

This detected error requires a power reset.

[Internal Error 28] inF5

Probable Cause

An error on the AFE brick has been detected.

Remedy

Contact your local Schneider Electric representative.

Clearing the Error Code

This detected error requires a power reset.

[Internal Error 29] ınFE

Probable Cause

An error on the power unit / inverter brick has been detected.

Remedy

Contact your local Schneider Electric representative.

Clearing the Error Code

This detected error requires a power reset.

[Internal Error 30] ınFu

Probable Cause

An error on the rectifier brick has been detected or an **[Input phase loss]** PHF error has been triggered when the DC bus is charged.

Remedy

Turn off the drive and then turn on again.

If **[Input phase loss]** PHF error code replaces **[Internal Error 30]** ınFu, refer to the instructions of **[Input phase loss]** PHF error *(see page 684)* otherwise contact your local Schneider Electric representative.

Clearing the Error Code

This detected error requires a power reset.

[Internal Error 31] inFV

Probable Cause

An error on the brick architecture has been detected (brick unavailable).

Remedy

Contact your local Schneider Electric representative.

Clearing the Error Code

This detected error requires a power reset.

[Inlet Pressure Error] iPPF

Probable Cause

The inlet pressure monitoring function has detected an error.

Remedy

- Search for a possible cause of low pressure at the inlet of system.
- Verify the settings of the monitoring function.

Clearing the Error Code

This detected error can be cleared with the **[Auto Fault Reset]** AtrS or manually with the **[Fault Reset Assign]** rSF parameter after the cause has been removed.

[Anti Jam Error] JAMF

Probable Cause

The Anti-Jam monitoring function has exceeded the maximum number of sequences allowed in the time window.

Remedy

- Search for a clogging substance in the impeller.
- Verify the settings of the monitoring function.

Clearing the Error Code

This detected error can be cleared with the **[Auto Fault Reset]** AtrY or manually with the **[Fault Reset Assign]** rSF parameter after the cause has been removed.

[Input Contactor] LCF

Probable Cause

The drive is not switched on even though **[Mains V. time out]** LCt timeout has elapsed.

Remedy

- Verify the input contactor and its wiring.
- Verify the **[Mains V. time out]** LCt timeout.
- Verify the supply mains/contactor/drive wiring.

Clearing the Error Code

This detected error can be cleared with the **[Auto Fault Reset]** AtrY or manually with the **[Fault Reset Assign]** rSF parameter after the cause has been removed.

[High Level Error] LCHF

Probable Cause

The maximum level switch is active during filling process.

Remedy

- Verify the parameter **[Max Level Switch Assign]** LCWL.
- Verify the state of the corresponding drive digital input and its wiring.

Clearing the Error Code

This detected error can be cleared with the **[Auto Fault Reset]** AtR or manually with the **[Fault Reset Assign]** rSF parameter after the cause has been removed.

[Low Level Error] LCLF

Probable Cause

The minimum level switch is active during emptying process.

Remedy

- Verify the parameter **[Min Level Switch Assign]** LCWH.
- Verify the state of the corresponding drive digital input and its wiring.

Clearing the Error Code

This detected error can be cleared with the **[Auto Fault Reset]** AtR or manually with the **[Fault Reset Assign]** rSF parameter after the cause has been removed.

[AI1 4-20mA loss] LFF1

Probable Cause

Loss of the 4-20 mA on analog input AI1.

This error is triggered when the measured current is below 2 mA.

Remedy

- Verify the connection on the analog inputs.
- Verify the setting of **[AI1 4-20mA loss]** LFL1 parameter.

Clearing the Error Code

This detected error can be cleared with the **[Auto Fault Reset]** AtR or manually with the **[Fault Reset Assign]** rSF parameter after the cause has been removed.

[AI2 4-20mA loss] LFF2

Probable Cause

Loss of the 4-20 mA on analog input AI2.

This error is triggered when the measured current is below 2 mA.

Remedy

- Verify the connection on the analog inputs.
- Verify the setting of **[AI2 4-20mA loss]** LFL2 parameter.

Clearing the Error Code

This detected error can be cleared with the **[Auto Fault Reset]** AtR or manually with the **[Fault Reset Assign]** rSF parameter after the cause has been removed.

[AI3 4-20mA loss] LFF3

Probable Cause

Loss of the 4-20 mA on analog input AI3.

This error is triggered when the measured current is below 2 mA.

Remedy

- Verify the connection on the analog inputs.
- Verify the setting of **[AI3 4-20mA loss]** LFL3 parameter.

Clearing the Error Code

This detected error can be cleared with the **[Auto Fault Reset]** AtR or manually with the **[Fault Reset Assign]** rSF parameter after the cause has been removed.

[AI4 4-20mA loss] LFF4

Probable Cause

Loss of the 4-20 mA on analog input AI4.

This error is triggered when the measured current is below 2mA.

Remedy

- Verify the connection on the analog inputs.
- Verify the setting of **[AI4 4-20mA loss]** LFL4 parameter.

Clearing the Error Code

This detected error can be cleared with the **[Auto Fault Reset]** AtR or manually with the **[Fault Reset Assign]** rSF parameter after the cause has been removed.

[AI5 4-20mA loss] LFF5

Probable Cause

Loss of the 4-20 mA on analog input AI5.

This error is triggered when the measured current is below 2 mA.

Remedy

- Verify the connection on the analog inputs.
- Verify the setting of **[AI5 4-20mA loss]** LFL5 parameter.

Clearing the Error Code

This detected error can be cleared with the **[Auto Fault Reset]** AtrE or manually with the **[Fault Reset Assign]** rSF parameter after the cause has been removed.

[MultiDrive Link Error] MdLF

Probable Cause

- The communication has been interrupted while running.
- The function has detected an inconsistency in the system configuration.

Remedy

- Check the communication network.
- Check the configuration of the multi-drive link function.

Clearing the Error Code

This detected error can be cleared with the **[Auto Fault Reset]** AtrE or manually with the **[Fault Reset Assign]** rSF parameter after the cause has been removed.

[Mains Freq Out Of Range] nFF

Probable Cause

[Mains Frequency] FAC on the AFE brick is out of range.

Remedy

- Verify the mains frequency.

Clearing the Error Code

This detected error can be cleared manually with the **[Fault Reset Assign]** rSF parameter after the cause has disappeared.

[M/P Device Error] nPdF

Probable Cause

A device on the MultiDrive Link architecture is missing.

Remedy

Check the communication network.

Clearing the Error Code

This detected error can be cleared with the **[Auto Fault Reset]** Atr or manually with the **[Fault Reset Assign]** rSF parameter after the cause has been removed.

[Lead Pump Error] ΠPLF

Probable Cause

The selected lead pump is not available while in run.

Remedy

Verify the state of the corresponding drive digital input for the pump availability information (for example **[Pump 1 Ready Assign]** ΠP1I for the pump 1).

Clearing the Error Code

This detected error can be cleared with the **[Auto Fault Reset]** AtrF or manually with the **[Fault Reset Assign]** rSF parameter after the cause has been removed.

[DC Bus Overvoltage] obF

Probable Cause

- Deceleration time too short or driving load.
- Supply mains voltage too high.

Remedy

- Increase the deceleration time.
- Configure the **[Dec ramp adapt.]** brA function if it is compatible with the application.
- Verify the supply mains voltage.

Clearing the Error Code

This detected error can be cleared with the **[Auto Fault Reset]** AtrF or manually with the **[Fault Reset Assign]** rSF parameter after the cause has been removed.

[AFE Bus unbalancing] oBF2

Probable Cause

- AFE DC bus unbalancing.
- Supply mains voltage too high.
- Total generative power too high

Remedy

- Verify the supply mains voltage.
- Contact your local Schneider Electric representative

Clearing the Error Code

This detected error can be cleared with the **[Auto Fault Reset]** AtrP or manually with the **[Fault Reset Assign]** rSF parameter after the cause has been removed.

[Overcurrent] oCF

Probable Cause

- Parameters in the **[Motor data]** MoA- menu are not correct.
- Inertia or load too high.
- Mechanical locking.

Remedy

- Verify the motor parameters.
- Verify the size of the drive/load.
- Verify the state of the mechanism.
- Decrease **[Current limitation]** CLI.
- Increase the switching frequency.

Clearing the Error Code

This detected error requires a power reset.

[Drive Overheating] oHF

Probable Cause

Drive temperature too high.

Remedy

Verify the motor load, the drive ventilation, and the ambient temperature. Wait for the drive to cool down before restarting.

Clearing the Error Code

This detected error can be cleared with the **[Auto Fault Reset]** Atr or manually with the **[Fault Reset Assign]** rSF parameter after the cause has been removed.

[Process Overload] oLC

Probable Cause

Process overload.

Remedy

- Verify and remove the cause of the overload.
- Verify the parameters of the **[Process overload]** oLd- function.

Clearing the Error Code

This detected error can be cleared with the **[Auto Fault Reset]** Atr or manually with the **[Fault Reset Assign]** rSF parameter after the cause has been removed.

[Motor Overload] oLF

Probable Cause

Triggered by excessive motor current.

Remedy

- Verify the setting of the motor thermal monitoring
- Verify the motor load. Wait for the motor to cool down before restarting
- Verify the setting of the following parameters:
  - **[Motor Th Current]** ItH
  - **[Motor Thermal Mode]** tHt
  - **[Motor Therm Thd]** ttd
  - **[MotorTemp ErrorResp]** oLL

Clearing the Error Code

This detected error can be cleared with the **[Auto Fault Reset]** Atr or manually with the **[Fault Reset Assign]** rSF parameter after the cause has been removed.

[Single Output Phase Loss] oPF I

Probable Cause

Loss of one phase at drive output.

Remedy

Verify the wiring from the drive to the motor.

Clearing the Error Code

This detected error can be cleared with the **[Auto Fault Reset]** Atr or manually with the **[Fault Reset Assign]** rSF parameter after the cause has been removed.

[Output Phase Loss] oPF2

Probable Cause

- Motor not connected or motor power too low.
- Output contactor opened.
- Instantaneous instability in the motor current.

Remedy

- Verify the wiring from the drive to the motor.
- If an output contactor is being used, set **[OutPhaseLoss Assign]** oPL to **[No Error Triggered]** oAC.
- If the drive is connected to a low-power motor or not connected to a motor: In factory settings mode, motor phase loss detection is active **[Output Phase Loss]** oPL = **[OPF Error Triggered]** YES. Deactivate motor phase loss detection **[Output Phase Loss]** oPL = **[Function Inactive]** nO.
- Verify and optimize the following parameters: **[IR compensation]** UFr, **[Nom Motor Voltage]** UnS and **[Rated mot. current]** nCr and perform **[Autotuning]** tUn.

Clearing the Error Code

This detected error can be cleared with the **[Auto Fault Reset]** AtR or manually with the **[Fault Reset Assign]** rSF parameter after the cause has been removed.

[Out Pressure High] oPHF

Probable Cause

The outlet pressure monitoring function has detected a high-pressure error.

Remedy

- Search for a possible cause of high pressure at the outlet of system.
- Verify the settings of the monitoring function.

Clearing the Error Code

This detected error can be cleared with the **[Auto Fault Reset]** AtR or manually with the **[Fault Reset Assign]** rSF parameter after the cause has been removed.

[Out Pressure Low] oPLF

Probable Cause

The outlet pressure monitoring function has detected a low-pressure error.

Remedy

- Verify that there is no pipe broken at the outlet of the system.
- Search for a possible cause of low pressure at the outlet of system.
- Verify the settings of the monitoring function.

Clearing the Error Code

This detected error can be cleared with the **[Auto Fault Reset]** AtrE or manually with the **[Fault Reset Assign]** rSF parameter after the cause has been removed.

[Supply Mains Overvoltage] oSF

Probable Cause

- Supply mains voltage too high.
- Disturbed supply mains.

Remedy

Verify the supply mains voltage.

Clearing the Error Code

This detected error can be cleared with the **[Auto Fault Reset]** AtrE or manually with the **[Fault Reset Assign]** rSF parameter after the cause has been removed.

[Cab I/O 24V Error] P 2 4 C

Probable Cause

The input DI58 is used to monitor the 24V on input terminal. If it breaks down, all inputs are suppressed to avoid unintended error messages (from software version V1.6).

- DI58 cabinet I/O input is not wired to the internal terminal X231.
- DI58 is used by another cabinet I/O function.

Remedy

- Verify if the terminal X231 is wired to the cabinet I/O input DI58.
- If the DI58 is used by another cabinet function, it is needed to change the function to another free cabinet I/O input on the X220 terminals. Additionally, it is needed to adapt the parameter setting of the new selected input.

Clearing the Error Code

This detected error requires a power reset.

[PumpCycle Start Error] P C P F

Probable Cause

The Pumpcycle monitoring function has exceeded the maximum number of start sequences allowed in the time window.

Remedy

- Search for a possible cause of repetitive start of system.
- Verify the settings of the monitoring function.

Clearing the Error Code

This detected error can be cleared with the **[Auto Fault Reset]** A t r or manually with the **[Fault Reset Assign]** r 5 F parameter after the cause has been removed.

[PID Feedback Error] PFΠF

Probable Cause

The PID feedback error was out of the allowed range around the set point during the time window.

Remedy

- Check for mechanical breakdown of pipes.
- Check for water leakage.
- Check for open discharge valve.
- Check for fire hydrant opened.
- Verify the settings of the monitoring function.

Clearing the Error Code

This detected error can be cleared with the **[Auto Fault Reset]** *AtrY* or manually with the **[Fault Reset Assign]** *rSF* parameter after the cause has been removed.

[Program Loading Error] PGLF

Probable Cause

Verify that the error code can be cleared.

Remedy

Contact your local Schneider Electric representative.

Clearing the Error Code

This detected error is cleared as soon as its cause has been removed.

[Program Running Error] PGrF

Probable Cause

Verify that the error code can be cleared.

Remedy

Contact your local Schneider Electric representative.

Clearing the Error Code

This detected error requires a power reset.

[Input phase loss] PHF

Probable Cause

- Drive incorrectly supplied or a tripped fused.
- One phase is unavailable.
- 3-phase Drive used on a single-phase supply mains.
- Unbalanced load.

Remedy

- Verify the power connection and the fuses.
- Use a 3-phase supply mains.
- Disable the detected error by **[Input phase loss]** iPL = **[No]** no if single phase supply mains or DC bus supply is used.

Clearing the Error Code

This detected error is cleared as soon as its cause has been removed.

[Pump Low Flow Error] PLFF

Probable Cause

The pump low flow monitoring function has detected an error.

Remedy

- Verify valve is closed on discharge.
- Pipes are damaged on the discharge.
- Search for a possible cause of low flow at the outlet of system.
- Verify the settings of the monitoring function.

Clearing the Error Code

This detected error can be cleared with the **[Auto Fault Reset]** *AtrY* or manually with the **[Fault Reset Assign]** *rSF* parameter after the cause has been removed.

[Safety Function Error] SAFF

Probable Cause

- Debounce time exceeded.
- Internal hardware error.
- STOA and STOB have a different status (high/low) for more than 1 second.

Remedy

- Verify the wiring of the digital inputs STOA and STOB.
- Contact your local Schneider Electric representative.

Clearing the Error Code

This detected error requires a power reset.

[Motor short circuit] 5CF 1

Probable Cause

Short-circuit or grounding at the drive output.

Remedy

- Verify the cables connecting the drive to the motor, and the motor insulation.
- Adjust the switching frequency.
- Connect chokes in series with the motor.

Clearing the Error Code

This detected error requires a power reset.

[Ground Short Circuit] 5CF 3

Probable Cause

Significant ground leakage current at the drive output if several motors are connected in parallel.

Remedy

- Verify the cables connecting the drive to the motor, and the motor insulation.
- Adjust the switching frequency.
- Connect chokes in series with the motor.

Clearing the Error Code

This detected error requires a power reset.

[IGBT Short Circuit] SCF4

Probable Cause

Power component detected error.

At product power-on, the IGBTs are tested for short circuit. Thereby an error (short circuit or interruption) has been detected on at least one IGBT. The time to check each transistor is between 1 and 10 µs.

Remedy

Verify the setting of **[Output Short Circuit Test]** SEr E parameter.

Contact your local Schneider Electric representative.

Clearing the Error Code

This detected error can be cleared with the **[Auto Fault Reset]** AEr or manually with the **[Fault Reset Assign]** r SF parameter after the cause has been removed.

[Motor Short Circuit] SCF5

Probable Cause

Short-circuit at drive output.

Remedy

- Verify the cables connecting the drive to the motor, and the motor's insulation.
- Contact your local Schneider Electric representative.

Clearing the Error Code

This detected error can be cleared with the **[Auto Fault Reset]** AEr or manually with the **[Fault Reset Assign]** r SF parameter after the cause has been removed.

[AFE ShortCircuit error] 5CFG

Probable Cause

AFE rectifier IGBT short-circuit.

AFE over current due to power factor correction systems in the grid. Each switch of the capacitor produces over voltage in the mains which can lead an over current in the AFE.

Remedy

- Verify the mains voltage when the power factor correction system is changing the capacitive load. Install only power factor correction systems with integrated reactors
- Verify the cables connecting the AFE brick to the mains.
- Contact your local Schneider Electric representative.

Clearing the Error Code

This detected error requires a power reset.

[Modbus Com Interruption] SLFI

Probable Cause

Communication interruption on the Modbus port.

Remedy

- Verify the communication bus.
- Verify the timeout.
- Refer to the Modbus user manual.

Clearing the Error Code

This detected error can be cleared with the **[Auto Fault Reset]** AtrS or manually with the **[Fault Reset Assign]** rSF parameter after the cause has been removed.

[PC Com Interruption] SLF2

Probable Cause

Communication interruption with the commissioning software.

Remedy

- Verify the commissioning software connecting cable.
- Verify the timeout.

Clearing the Error Code

This detected error can be cleared with the **[Auto Fault Reset]** AtrE or manually with the **[Fault Reset Assign]** rSF parameter after the cause has been removed.

[HMI Com Interruption] SLF3

Probable Cause

Communication interruption with the Graphic display terminal.

This error is triggered when the command or reference value are given using the Graphic Display Terminal and if the communication is interrupted during more than 2 seconds.

Remedy

- Verify the Graphic display terminal connection.
- Verify the timeout.

Clearing the Error Code

This detected error can be cleared with the **[Auto Fault Reset]** AtrE or manually with the **[Fault Reset Assign]** rSF parameter after the cause has been removed.

[Motor Overspeed] SoF

Probable Cause

- Instability or driving load too high.
- If a downstream contactor is used, the contacts between the motor and the drive have not been closed before applying a Run command.

Remedy

- Verify the motor parameter settings.
- Verify the size of the motor/drive/load.
- Verify and close the contacts between the motor and the drive before applying a Run command.

Clearing the Error Code

This detected error requires a power reset.

[Motor Stall Error] SLF

Probable Cause

The stall monitoring function has detected an error.

The **[Motor Stall Error]** SLF is triggered on the following conditions:

- The output frequency is smaller than the stalling frequency **[Stall Frequency]** SLP3
- The output current is higher than the stalling current **[Stall Current]** SLP2
- For a duration longer than the stalling time S**[tall Max Time]** SLP1.

Remedy

- Search for a mechanical blocking of the motor.
- Search for a possible cause of motor overload.
- Verify the settings of the monitoring function.

Clearing the Error Code

This detected error can be cleared with the **[Auto Fault Reset]** AtrP or manually with the **[Fault Reset Assign]** rSF parameter after the cause has been removed.

[AI2 Thermal Sensor Error] tE2CF

Probable Cause

The thermal sensor monitoring function has detected a thermal sensor error on analog input AI2:

- Open circuit, or
- Short circuit.

Remedy

- Verify the sensor and its wiring.
- Replace the sensor.
- Verify the setting of **[AI2 Type]** AI2t parameter.

Clearing the Error Code

This detected error can be cleared with the **[Auto Fault Reset]** AtrP or manually with the **[Fault Reset Assign]** rSF parameter after the cause has been removed.

[AI3 Thermal Sensor Error] tE3CF

Probable Cause

The thermal sensor monitoring function has detected a thermal sensor error on analog input AI3:

- Open circuit, or
- Short circuit.

Remedy

- Verify the sensor and its wiring.
- Replace the sensor.
- Verify the setting of**[AI3 Type]** AI3t parameter.

Clearing the Error Code

This detected error can be cleared with the **[Auto Fault Reset]** AtrP or manually with the **[Fault Reset Assign]** rSF parameter after the cause has been removed.

[AI4 Thermal Sensor Error] E 4 C F

Probable Cause

The thermal sensor monitoring function has detected a thermal sensor error on analog input AI4:

- Open circuit, or
- Short circuit.

Remedy

- Verify the sensor and its wiring.
- Replace the sensor.
- Verify the setting of **[AI4 Type]** A I 4 E parameter

Clearing the Error Code

This detected error can be cleared with the **[Auto Fault Reset]** A E r or manually with the **[Fault Reset Assign]** r S F parameter after the cause has been removed.

[AI5 Thermal Sensor Error] E 5 C F

Probable Cause

The thermal sensor monitoring function has detected a thermal sensor error on analog input AI5:

- Open circuit, or
- Short circuit.

Remedy

- Verify the sensor and its wiring.
- Replace the sensor.
- Verify the setting of **[AI5 Type]** A I 5 E parameter.

Clearing the Error Code

This detected error can be cleared with the **[Auto Fault Reset]** A E r or manually with the **[Fault Reset Assign]** r S F parameter after the cause has been removed.

[MotorWinding A Error] tFA

Probable Cause

The digital input assigned to **[MotorWinding A Assign]** tFAA is active for longer than **[MotorWinding A Delay]** tFdA.

Remedy

- Verify the connected device (motor winding thermal switch) and its wiring.
- Verify the motor load and the ambient temperature. Wait for the motor to cool down before restarting.

Clearing the Error Code

This detected error can be cleared with the **[Auto Fault Reset]** Atr or manually with the **[Fault Reset Assign]** rSF parameter after the cause has been removed.

[MotorWinding B Error] tFb

Probable Cause

The digital input assigned to **[MotorWinding B Assign]** tFAb is active for longer than **[MotorWinding B Delay]** tFdb.

Remedy

- Verify the connected device (motor winding thermal switch) and its wiring.
- Verify the motor load and the ambient temperature. Wait for the motor to cool down before restarting.

Clearing the Error Code

This detected error can be cleared with the **[Auto Fault Reset]** Atr or manually with the **[Fault Reset Assign]** rSF parameter after the cause has been removed.

[MotorBearing A Error] EFC

Probable Cause

The digital input assigned to **[MotorBearing A Assign]** EFAC is active for longer than **[MotorBearing A Delay]** EFdC.

Remedy

- Verify the connected device (motor winding thermal switch) and its wiring.
- Verify the motor load and the ambient temperature. Wait for the motor to cool down before restarting.

Clearing the Error Code

This detected error can be cleared with the **[Auto Fault Reset]** AEr or manually with the **[Fault Reset Assign]** rSF parameter after the cause has been removed.

[MotorBearing B Error] EFd

Probable Cause

The digital input assigned to **[MotorBearing B Assign]** EFAd is active for longer than **[MotorBearing B Delay]** EFdd.

Remedy

- Verify the connected device (motor winding thermal switch) and its wiring.
- Verify the motor load and the ambient temperature. Wait for the motor to cool down before restarting.

Clearing the Error Code

This detected error can be cleared with the **[Auto Fault Reset]** AEr or manually with the **[Fault Reset Assign]** rSF parameter after the cause has been removed.

[AI2 Th Level Error] tH2F

Probable Cause

The thermal sensor monitoring function has detected a high temperature error on analog input AI2.

Remedy

- Search for a possible cause of overheating.
- Verify the settings of the monitoring function.

Clearing the Error Code

This detected error can be cleared with the **[Auto Fault Reset]** AtrS or manually with the **[Fault Reset Assign]** rSF parameter after the cause has been removed.

[AI3 Th Level Error] tH3F

Probable Cause

The thermal sensor monitoring function has detected a high temperature error on analog input AI3.

Remedy

- Search for a possible cause of overheating.
- Verify the settings of the monitoring function.

Clearing the Error Code

This detected error can be cleared with the **[Auto Fault Reset]** AtrS or manually with the **[Fault Reset Assign]** rSF parameter after the cause has been removed.

[AI4 Th Level Error] E H 4 F

Probable Cause

The thermal sensor monitoring function has detected a high temperature error on analog input AI4.

Remedy

- Search for a possible cause of overheating.
- Verify the settings of the monitoring function.

Clearing the Error Code

This detected error can be cleared with the **[Auto Fault Reset]** A t r or manually with the **[Fault Reset Assign]** r S F parameter after the cause has been removed.

[AI5 Th Level Error] E H 5 F

Probable Cause

The thermal sensor monitoring function has detected a high temperature error on analog input AI5.

Remedy

- Search for a possible cause of overheating.
- Verify the settings of the monitoring function.

Clearing the Error Code

This detected error can be cleared with the **[Auto Fault Reset]** A t r or manually with the **[Fault Reset Assign]** r S F parameter after the cause has been removed.

[IGBT Overheating] ΕJF

Probable Cause

Drive power stage overheating.

On AFE drives: the thermal model of the AFE IGBT thermal monitoring has detected an overheat. This function protects the IGBT's.

Remedy

- Verify the size of the load/motor/drive according to environment conditions.
- Reduce the switching frequency.

Clearing the Error Code

This detected error can be cleared with the **[Auto Fault Reset]** AtrS or manually with the **[Fault Reset Assign]** rSF parameter after the cause has been removed.

[AFE IGBT over-heat error] ΕJF2

Probable Cause

Rectifier IGBT power stage overheating.

Remedy

- Verify the size of the load/motor/drive according to environment conditions.
- Verify and clean, if necessary, the cooling channel.
- Clean or replace the filter mats on IP54 products.

Clearing the Error Code

This detected error requires a power reset.

[Autotuning Error] tnF

Probable Cause

- Special motor or motor whose power is not suitable for the drive.
- Motor not connected to the drive.
- Motor not stopped.

Remedy

- Verify that the motor/drive are compatible.
- Verify that the motor is connected to the drive during autotuning.
- If an output contactor is being used, verify that it is closed during autotuning.
- Verify that the motor is present and stopped during autotuning.
- In case of reluctant motor, reduce **[PSI Align Curr Max]** MCr.

Clearing the Error Code

This detected error can be cleared manually with the **[Fault Reset Assign]** rSF parameter after the cause has disappeared.

[Process Underload] uLF

Probable Cause

Process underload.

Remedy

- Verify and remove the cause of the underload.
- Verify the parameters of the **[Process underload]** uLd- function

Clearing the Error Code

This detected error can be cleared with the **[Auto Fault Reset]** Atr or manually with the **[Fault Reset Assign]** rSF parameter after the cause has been removed.

[AFE Mains Undervoltage] ⊔ r F

Probable Cause

- Too low DC-Bus voltage due to mains undervoltage.
- AFE overload.

Remedy

- Verify mains voltage.
- Verify the size of the load/motor/drive according to environment conditions.

Clearing the Error Code

This detected error is cleared as soon as its cause has been removed.

[Supply Mains UnderV] ⊔ S F

Probable Cause

- Supply mains too low.
- Transient voltage dips.

Remedy

Verify the voltage and the parameters of **[Undervoltage handling]** ⊔ S b.

Clearing the Error Code

This detected error is cleared as soon as its cause has been removed.

Section 13.3
FAQ

FAQ

Introduction

If the display does not light up, verify the supply mains to the drive.

The assignment of the fast stop or freewheel functions help to prevent the drive starting if the corresponding digital inputs are not switched on. The drive then displays **[Freewheel]** nSt in freewheel stop and **[Fast stop]** FSt in fast stop. This is a normal behavior since these functions are active at zero so that the drive is stopped if there is a wire break.

Verify that the run command input is activated in accordance with the selected control mode (**[2/3-wire control]** tCC and **[2-wire type]** tCt parameters).

If the reference channel or command channel is assigned to a fieldbus, when the supply mains is connected, the drive displays **[Freewheel]** nSt. It remains in stop mode until the fieldbus gives a command.

Drive lock in blocking state

The drive is locked in a blocking state and displays **[Freewheel Stop]** nSt, if a Run command such as Run forward, Run reverse, DC injection is still active during:

- A product reset to the factory settings,
- A manual "Fault Reset" using **[Fault Reset Assign]** rSF,
- A manual "Fault reset" by applying a product switched off and on again,
- A stop command given by a channel that is not the active channel command (such as Stop key of the display terminal in 2/3 wires control),

It will be necessary to deactivate all active Run commands prior to authorizing a new Run command.

Option Module Changed or Removed

When an option module is removed or replaced by another, the drive locks in **[Incorrect configuration]** CFF error mode at power-on. If the option module has been deliberately changed or removed, the detected error can be cleared by pressing the **OK** key twice, which causes the factory settings to be restored for the parameter groups affected by the option module.

Control Block Changed

When a control block is replaced by a control block configured on a drive with a different rating, the drive locks in **[Incorrect configuration]** CFF error mode at power-on. If the control block has been deliberately changed, the detected error can be cleared by pressing the **OK** key twice, which **causes all the factory settings to be restored.**

Glossary

D

Display terminal

The display terminal menus are shown in square brackets.

For example: **[Communication]**

The codes are shown in round brackets.

For example: CoM-

Parameter names are displayed on the display terminal in square brackets.

For example: **[Fallback Speed]**

Parameter codes are displayed in round brackets.

For example: LFF

E

Error

Discrepancy between a detected (computed, measured, or signaled) value or condition and the specified or theoretically correct value or condition.

F

Factory setting

Factory settings when the product is shipped

Fault

Fault is an operating state. If the monitoring functions detect an error, a transition to this operating state is triggered, depending on the error class. A "Fault reset" is required to exit this operating state after the cause of the detected error has been removed. Further information can be found in the pertinent standards such as IEC 61800-7, ODVA Common Industrial Protocol (CIP).

Fault Reset

A function used to restore the drive to an operational state after a detected error is cleared by removing the cause of the error so that the error is no longer active.

M

Monitoring function

Monitoring functions acquire a value continuously or cyclically (for example, by measuring) in order to check whether it is within permissible limits. Monitoring functions are used for error detection.

P

Parameter

Device data and values that can be read and set (to a certain extent) by the user.

PELV

Protective Extra Low Voltage, low voltage with isolation. For more information: IEC 60364-4-41

PLC

Programmable logic controller

Power stage

The power stage controls the motor. The power stage generates current for controlling the motor.

W

Warning

If the term is used outside the context of safety instructions, a warning alerts to a potential error that was detected by a monitoring function. A warning does not cause a transition of the operating state.

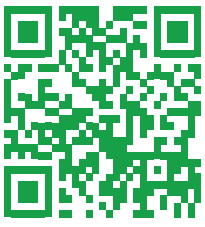

ATV600_Programming_Manual_EN_EAV64318_07

www.schneider-electric.com/contact

Backflow Preventer, 1/2", 007M1QT

RP/IS-007

Installation, Maintenance, & Repair Series 007 and LF007

Double Check Valve Assemblies

Sizes: ½" – 3" (15 - 80mm)

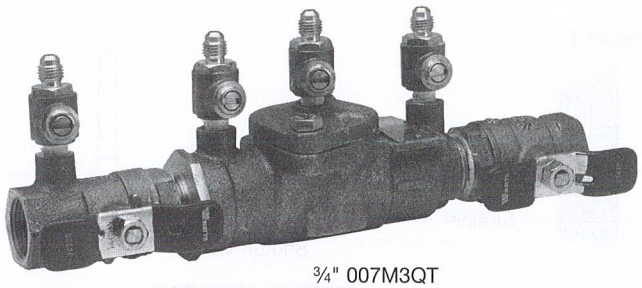

¾" 007M3QT

⚠ WARNING

Read this Manual BEFORE using this equipment.

Failure to read and follow all safety and use information can result in death, serious personal injury, property damage, or damage to the equipment.

Keep this Manual for future reference.

⚠ WARNING

Local building or plumbing codes may require modifications to the information provided. You are required to consult the local building and plumbing codes prior to installation. If the information provided here is not consistent with local building or plumbing codes, the local codes should be followed. This product must be installed by a licensed contractor in accordance with local codes and ordinances.

⚠ WARNING

Need for Periodic Inspection/Maintenance: This product must be tested periodically in compliance with local codes, but at least once per year or more as service conditions warrant. All products must be retested once maintenance has been performed. Corrosive water conditions and/or unauthorized adjustments or repair could render the product ineffective for the service intended. Regular checking and cleaning of the product's internal and external components helps assure maximum life and proper product function.

NOTICE

For Australia and New Zealand, line strainers should be installed between the upstream shutoff valve and the inlet of the backflow preventer.

Watts product specifications in U.S. customary units and metric are approximate and are provided for reference only. For precise measurements, please contact Watts Technical Service. Watts reserves the right to change or modify product design, construction, specifications, or materials without prior notice and without incurring any obligation to make such changes and modifications on Watts products previously or subsequently sold.

Testing

For field testing procedure, refer to Watts installation sheets IS-TK-DP/DL, IS-TK-9A, IS-TK-99E and IS-TK-99D found on **Watts.com.**

For other repair kits and service parts, refer to our Backflow Prevention Products Repair Kits & Service Parts price list PL-RP-BPD found on **Watts.com.**

For technical assistance, contact your local Watts representative.

Installation Instructions

Series 007 and LF007

½" - 2" (15 - 50mm)

Indoors - Figure 1

Check local codes for installation requirements. Pipe lines should be thoroughly flushed to remove foreign material before installing the unit. A strainer should be installed as shown, ahead of backflow preventer to prevent disc from unnecessary fouling. Install valve inline with arrow on valve body pointing in the direction of flow.

For indoor installations, it is important that the valve be easily accessible to facilitate testing and servicing. Do not install in a concealed location.

⚠ CAUTION

Do not install with strainer when backflow preventer is used on seldom-used water lines which are called upon during emergencies, such as fire sprinkler lines, etc.

It is important that Series 007 and LF007 be tested periodically in compliance with local codes, but at least once a year or more often depending upon system conditions. Regular inspection, testing and cleaning assures maximum life and proper product function.

NOTICE

Fire Protection System Installations

The National Fire Protection Agency (NFPA) Guidelines require a confirming flow test to be conducted whenever a "main line" valve such as the shutoff valves or a backflow assembly have been operated. Certified testers of backflow assemblies must conduct this test. The trim valves of the detector meter bypass line, on assemblies so equipped, should be shutoff during the confirming flow test. When the test is completed, the trim valves must be returned to a fully open position.

Meter Box Installation

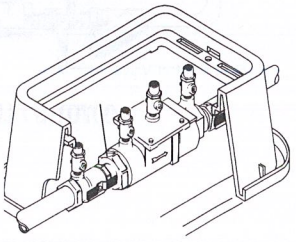

WATTS®

E-1207

Installation Instructions

Series 007 and LF007

½" - 2" (15 - 50mm)

Figure 1

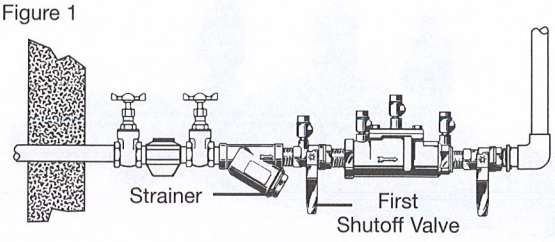

007QT-S / LF007QT-S

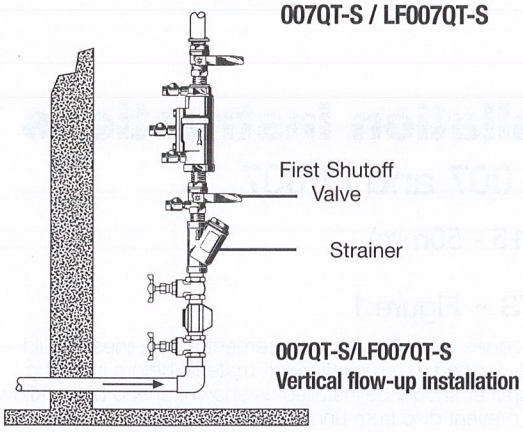

007QT-S/LF007QT-S
Vertical flow-up installation

Figure 2

WattsBox Insulated Enclosure
Available in Aluminum or Fiberglass.
For more information, send for ES-WB.

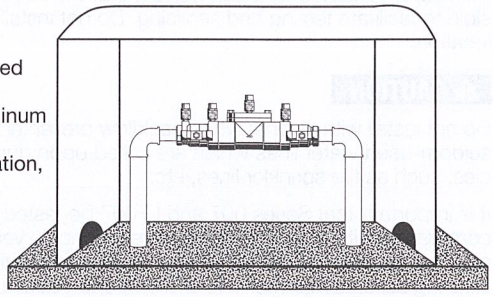

Figure 3

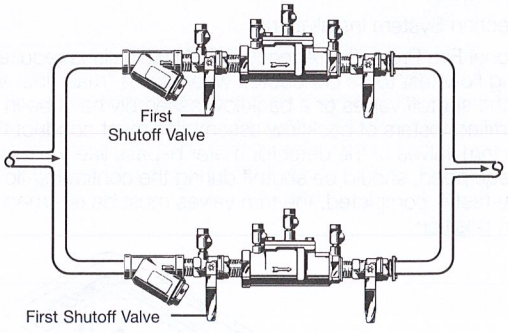

007QT-S / LF007QT-S

For repair kits and parts, refer to our Backflow Prevention Products Repair Kits & Service Parts price list PL-RP-BPD found on **www.watts.com.**

Parallel - Figure 3

Two or more Series 007 and LF007 smaller size valves may be piped in parallel (where approved) to serve a larger supply pipe main. This type of installation is employed whenever it is vital to maintain a continuous supply of water/where interruptions for testing and servicing would be unacceptable. It also has the advantage of providing increased capacity where needed beyond that provided by a single valve and permits testing or servicing of an individual valve without shutting down the complete line.

For two valve installations the total capacity of the devices should equal or exceed that required by the system.

The quantity of valves used in parallel should be determined by the engineers judgement based on the operating conditions of a specific installation.

Service and Maintenance

Servicing the First and Second Check Valves

NOTICE

Before servicing, ensure supply water is turned off or shutoff valves are in the closed position.

1. Remove the cover, then remove the retainer from the body valve. The check valve modules can now be removed from the valve by hand or with a screwdriver.

NOTICE

For Series 007 and LF007 sizes ½" - 2" (15-50mm), the seats and springs of the first and second check modules are not interchangeable. The heavier spring and smaller diameter seat belong with the first check module. Series 007M1 sizes ¾" - 1" (20-25mm) and Series 007M2 ¾" (20mm) have interchangeable seats and springs.

2. The check seats are attached to the cage with a bayonet type locking arrangement. Holding the cage in one hand, push the seat inward and rotate clockwise against the cage. For ¾" (20mm) Series 007M2/LF007M2 and LF007 pull apart seat and cage. The seat, cage, spring and disc assembly are now individual components.
3. The disc assembly may now be cleaned and reassembled or, depending on its condition, it may be discarded and replace with a new assembly from the repair kit. O-rings should be cleaned or replaced as necessary.
4. Reassemble the check valve module in the reverse order. Check modules are installed in the valve body with the seats facing the valve inlet. The modules must be securely in place before the retainer can be replaced. On the ¾" - 1" (20-25mm)size, this retainer may have to be tilted slightly into place. Replace cover.

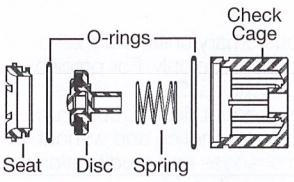

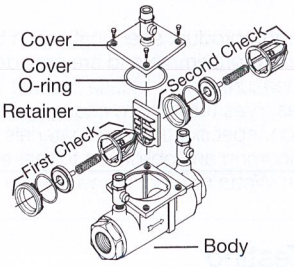

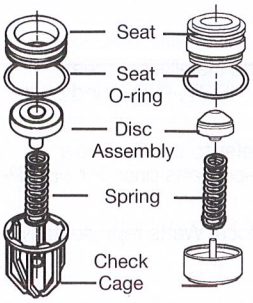

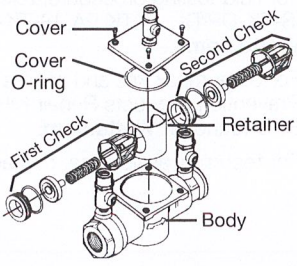

Installation Instructions

Series 007 and LF007

2½" and 3"

Indoors - Figure 4

Series 007 may be installed in either a vertical or horizontal position. Pipe lines should be thoroughly flushed to remove foreign material before installing the unit. A strainer should be installed as shown, ahead of backflow preventer to prevent disc from unnecessary fouling. Install valve inline with arrow on valve body pointing in the direction of flow.
For indoor installations, it is important that the valve be easily accessible to facilitate testing and servicing. Do not install in a concealed location.

⚠ CAUTION

Do not install with strainer when backflow preventer is used on seldom-used water lines which are called upon during emergencies, such as fire sprinkler lines, etc.
It is important that Series 007 and LF007 be tested periodically in compliance with local codes, but at least once a year or more often depending upon system conditions.

NOTICE

Fire Protection System Installations
The National Fire Protection Agency (NFPA) Guidelines require a confirming flow test to be conducted whenever a "main line" valve such as the shutoff valves or a backflow assembly have been operated. Certified testers of backflow assemblies must conduct this test. The trim valves of the detector meter bypass line, on assemblies so equipped, should be shutoff during the confirming flow test. When the test is completed, the trim valves must be returned to a fully open position.

Figure 4

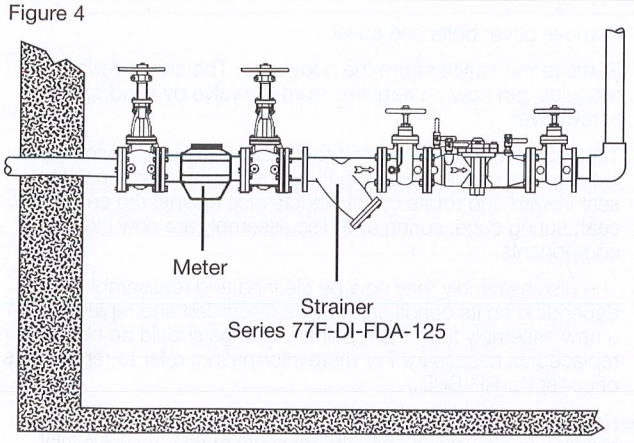

2½", 3" 007 / LF007

Outside Building Above Ground -

Figure 5

In an area where freezing conditions do not occur, Series 007 and LF007 can be installed outside of a building. The most satisfactory installation is above ground and should be installed in this manner whenever possible. In an area where freezing conditions can occur, Series 007 and LF007 should be installed above ground in an insulated enclosure.

Annual inspection of all water system safety and control valves is required and necessary. Regular inspection, testing and cleaning assures maximum life and proper product function.

Figure 5

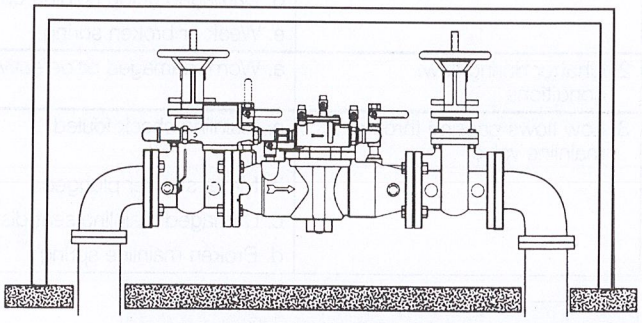

WattsBox Insulated Enclosures
Available in Aluminum or Fiberglass.
For more information, send for ES-WB.

Parallel - Figure 6

Consult Local codes for Approval

Two or more Series 007 and LF007 smaller size valves may be piped in parallel (where approved) to serve a larger supply pipe main. This type of installation is employed whenever it is vital to maintain a continuous supply of water/where interruptions for testing and servicing would be unacceptable. It also has the advantage of providing increase capacity where needed beyond that provided by a single valve and permits testing or servicing of an individual valve without shutting down the complete line. For two valve installations the total capacity should equal or exceed that required by the system.
The quantity of valves used in parallel should be determined by the engineer's judgement based on the operating conditions of a specific installation. (See F-FC regarding flow curves)

NOTICE

The flange gasket bolts for the gate valves should be retightened during installation as the bolts may have loosened due to storage and shipping.

Figure 6

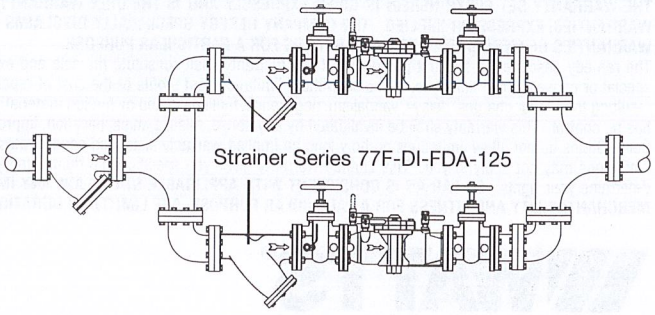

2½", 3" 007 / LF007

Servicing First and Second Check Valves

Series 007 and LF007

2½" and 3"

1. Remove cover bolts and cover.
2. Remove the retainer from the body bore. The check valve modules can now be removed from the valve by hand or with a screwdriver.
3. The check seats are attached to the cage with a bayonet type locking arrangement. Holding the cage in one hand, push the seat inward and rotate counterclock-wise against the cage. The seat, spring cage, spring and disc assembly are now individual components.
4. The disc assembly may now be cleaned and reassembled or depending on its condition, may be discarded and replaced with a new assembly from the repair kit. O-rings should be cleaned or replaced as necessary. For more information, refer to repair parts price list PL-RP-BPD.
5. Reassemble the Check valve modules. Check modules are installed in the valve body with the seats facing the valve inlet. The modules must be securely in place before the retainer can be replaced.

No special tools required to service Series 007 and LF007.

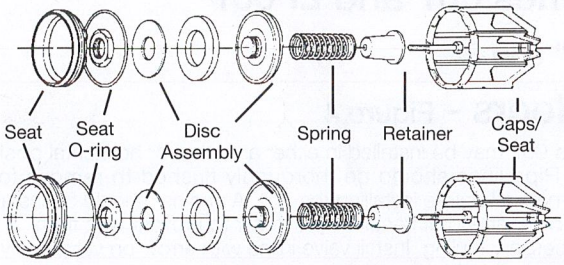

Check Assemblies

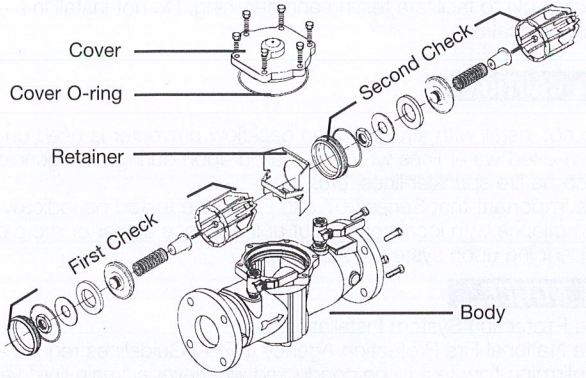

Troubleshooting Guide — Series 007 and LF007

Symptom	Cause	Solution
1. Check valve fails to hold 1.0 PSID minimum	a. Debris on check disc sealing surface	Disassemble and clean
	b. Leaking gate valve	Disassemble and clean or repair
	c. Damaged seat disc or seat o-ring	Disassemble and replace
	d. Damaged guide holding check open	Disassemble and clean or replace
	e. Weak or broken spring	Disassemble and replace spring
2. Chatter during flow conditions	a. Worn, damaged or defective guide	Disassemble and repair or replace guide
3. Low flows passing through mainline valve	a. Mainline check fouled	Disassemble and clean
	b. Meter strainer plugged	Disassemble and clean
	c. Damaged mainline seat disc or seat	Disassemble and replace
	d. Broken mainline spring	Disassemble and replace

For repair kits and parts, refer to our Backflow Prevention Products Repair Kits & Service Parts price list PL-RP-BPD found on **www.watts.com.**

WARNING: This product contains chemicals known to the State of California to cause cancer and birth defects or other reproductive harm.
For more information: www.watts.com/prop65

Limited Warranty: Watts Regulator Co. (the "Company") warrants each product to be free from defects in material and workmanship under normal usage for a period of one year from the date of original shipment. In the event of such defects within the warranty period, the Company will, at its option, replace or recondition the product without charge.
THE WARRANTY SET FORTH HEREIN IS GIVEN EXPRESSLY AND IS THE ONLY WARRANTY GIVEN BY THE COMPANY WITH RESPECT TO THE PRODUCT. THE COMPANY MAKES NO OTHER WARRANTIES, EXPRESS OR IMPLIED. THE COMPANY HEREBY SPECIFICALLY DISCLAIMS ALL OTHER WARRANTIES, EXPRESS OR IMPLIED, INCLUDING BUT NOT LIMITED TO THE IMPLIED WARRANTIES OF MERCHANTABILITY AND FITNESS FOR A PARTICULAR PURPOSE.
The remedy described in the first paragraph of this warranty shall constitute the sole and exclusive remedy for breach of warranty, and the Company shall not be responsible for any incidental, special or consequential damages, including without limitation, lost profits or the cost of repairing or replacing other property which is damaged if this product does not work properly, other costs resulting from labor charges, delays, vandalism, negligence, fouling caused by foreign material, damage from adverse water conditions, chemical, or any other circumstances over which the Company has no control. This warranty shall be invalidated by any abuse, misuse, misapplication, improper installation or improper maintenance or alteration of the product.
Some States do not allow limitations on how long an implied warranty lasts, and some States do not allow the exclusion or limitation of incidental or consequential damages. Therefore the above limitations may not apply to you. This Limited Warranty gives you specific legal rights, and you may have other rights that vary from State to State. You should consult applicable state laws to determine your rights. **SO FAR AS IS CONSISTENT WITH APPLICABLE STATE LAW, ANY IMPLIED WARRANTIES THAT MAY NOT BE DISCLAIMED, INCLUDING THE IMPLIED WARRANTIES OF MERCHANTABILITY AND FITNESS FOR A PARTICULAR PURPOSE, ARE LIMITED IN DURATION TO ONE YEAR FROM THE DATE OF ORIGINAL SHIPMENT.**

WATTS®

A Watts Water Technologies Company

USA: Tel: (978) 689-6066 • Fax: (978) 975-8350 • Watts.com
Canada: Tel: (905) 332-4090 • Fax: (905) 332-7068 • Watts.ca
Latin America: Tel: (52) 81-1001-8600 • Fax: (52) 81-8000-7091 • Watts.com

© 2015 Watts

CC-0901 - Calibration column, 1000mL 0-16gph

KOFLO CORPORATION

Calibration Column Installation and Operating Instructions

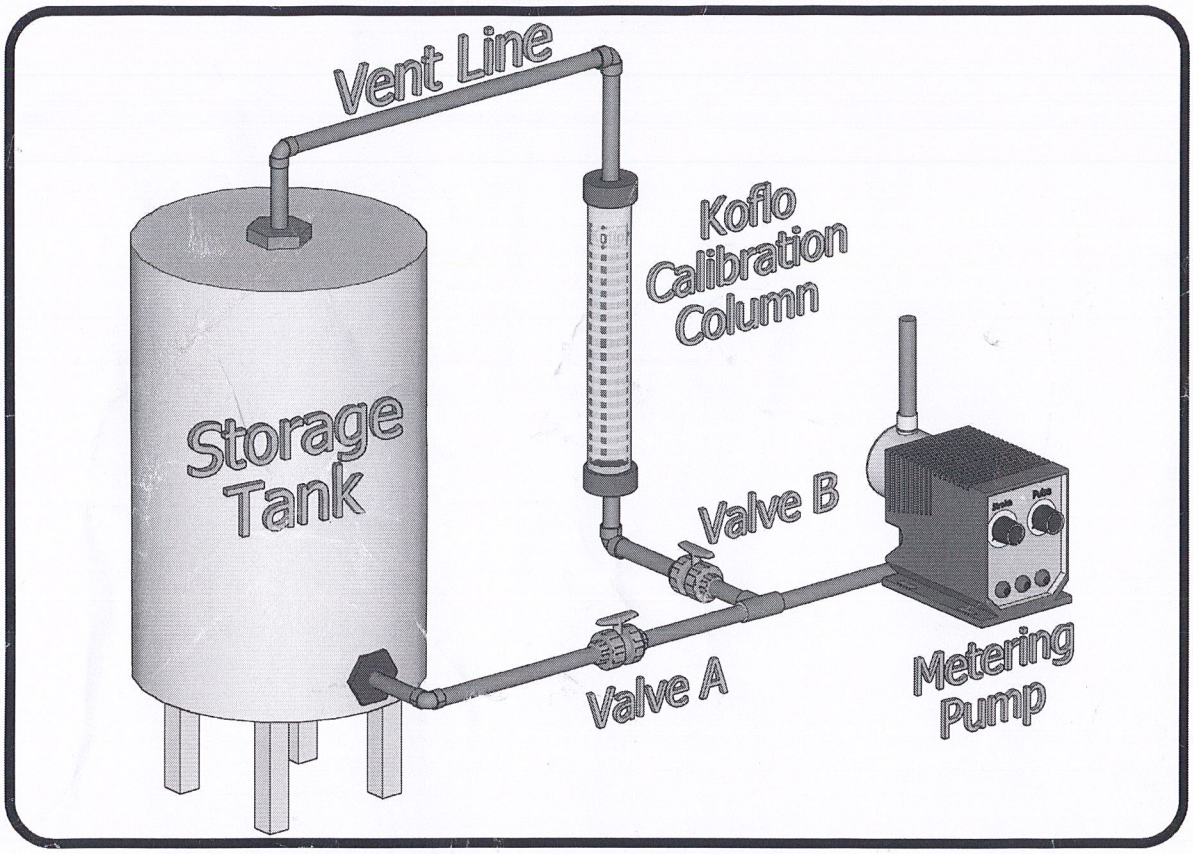

Operating Instructions

1. Install calibration column on the suction side of pump as shown above.
2. With valve A open and the pump operating, open valve B slowly until fluid level reaches the 0 mark.
3. Close valve A and begin timing with a stopwatch or wristwatch second hand.
4. At the one minute mark, observe fluid level. The observed level indicates the actual pump flowrate in mL/min and GPH.
5. When not in use, the calibration column should be drained, valve B closed, and valve A opened.

www.koflo.com

Koflo Corporation
309 Cary Point Drive
Cary, IL 60013

Tel: (847) 516-3700
Fax: (847) 516-3724
Toll Free: 1-800-STATICS

LSH-P903 - Switch, Level, Mech Float, Narrow Angle, N.O., Blue
LSHH-0901/0903 - Switch, Level, Mech Float, Narrow Angle, N.C., YEL
LSL/LSLL-0902 - Switch, Level, Mech Float, Narrow Angle, N.O., Blue

Form 237
Sheet P/N 7801165
Rev. D

Gems Sensors

Series M Mechanical Tilt Float Switch

Installation and Operation Bulletin

Specifications

Cord	16 gauge, 2 or 3 conductor SJOW, Oil Resistant CPE
Contact Rating	13 amp @ 120/240 VAC, 1/2hp
Contact Design	SPST, Normally Open or Normally Closed, Common with N.O. & N.C. (Form C)
Temperature Rating	32°F (0°C) to 194°F (90°C) Dry and 140°F (60°C) Water Resistant
Overall Weight	1.0 lbs. (not including weight)
Tether Method	Tie-wrap nylon, weight: 2.5 lbs.
Approvals	U.L. Recognized, CSA Certified

Installation

Tether Tie-Wrap (Fig 1)

Attach cord, using a tie-wrap, to a stationary structure. This is known as the tether point, it will determine the pumping range. The farther the float is placed from the tether point, the greater the pumping range. The minimum distance that the float should be placed from the tether point is 3 inches.

Tether-Weight (Fig 2)

Place tension-brand over the cord before installation. Place the weight at the desired position and secure with the tension-band. This position will determine the pumping range. The farther the float is placed from the tether point, the greater the pumping range. The minimum distance that the float should be placed from the tether point is 3 inches.

Determine tether point using charts below as a reference

Notes:

1. To Prevent Motor Burnout - In a pumpdown application make sure the turn-off level is at least 2 inches above the intake of the submersible pump.

2. Securing Tether Points - Make sure levels are correct and that floats are free from any obstructions before securing tether points.

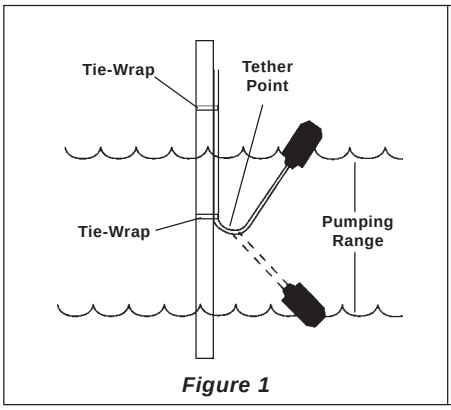

Figure 1

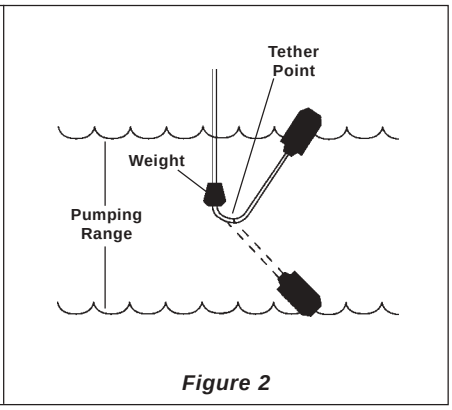

Figure 2

Tether Data For Wide Angle Float

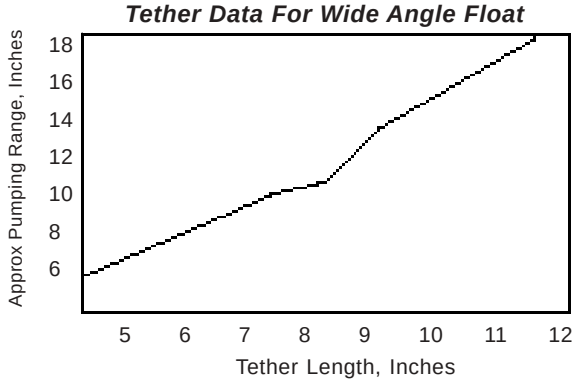

Tether Data For Narrow Angle Float

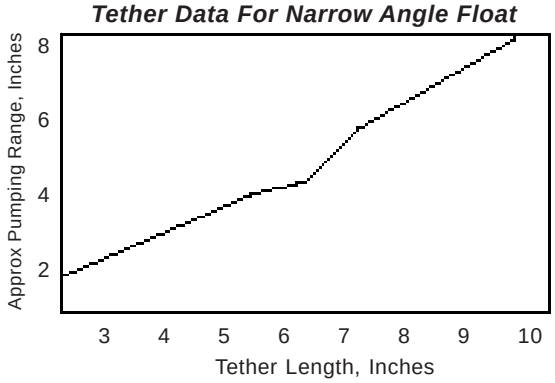

Notes:

1. Narrow angle pumping range is approximately 2 In. to 8 In.
2. Wide angle pumping range is approximately 5 In. to 18 In.

Dimensions

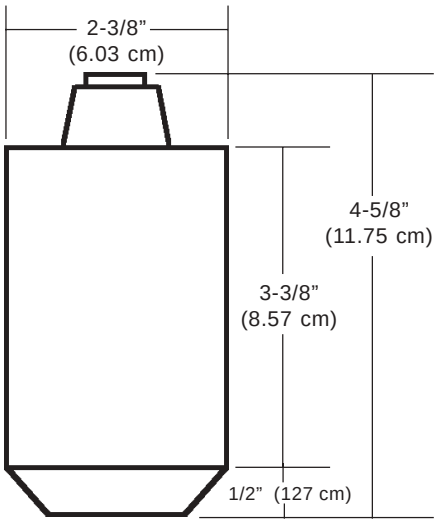

Contact Configurations

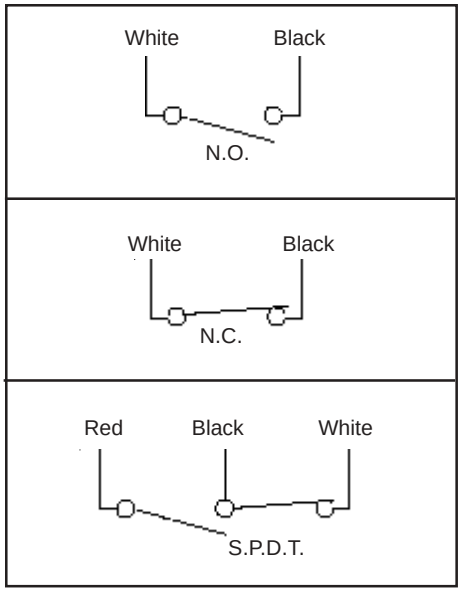

Important Points:

- Gems products must be maintained and installed in strict accordance with the National Electrical Code and the applicable Gems Product Instruction Bulletin that covers installation, operation and proper maintenance. Failure to observe this information may result in serious injury or damages.
- For hazardous area applications involving such things as, but not limited to, ignitable mixtures, combustible dust and flammable materials, use an appropriate explosionproof enclosure or intrinsically safe interface device.
- Please adhere to the pressure and temperature limitations shown throughout this catalog for our level and flow sensors. These limitations must not be exceeded. These pressures and temperatures take into consideration possible system surge pressures/temperatures and their frequencies.
- Selection of materials for compatibility with the media is critical to the life and operation of Gems products. Take care in the proper selection of materials of construction, testing is required.
- NSF-approved sensors are made of materials approved for potable water applica tions according to Standard 61.
- Stainless steel is generally regarded as safe by NSF and FDA.
- Life expectancy of switch contacts varies with application. Contact Gems if life cycle testing is required.
- Ambient temperature changes do affect switch set points, since the gravity of a liquid can vary with temperature.
- Our sensors have been designed to resist shock and vibration. However, shock and vibration should be minimized.
- Filter liquid media containing particulate and/or debris to ensure the proper operation of our products.
- Electrical entries and mounting points in an enclosed tank may require liquid/vapor sealing.
- Our sensors must not be field-repaired.
- Physical damage sustained by product may render it unserviceable.

Return Policy

Returns are accepted on stock items up to 30 days from date of order. You must contact our Returns Department for a Return Authorization (RA) number. Return the goods - freight prepaid - in the original container and include original packing slip. C. O. D. returns are not accepted. Gems reserves the right to apply restocking charges.

Tel: 860-793-4357
Fax: 860-793-4563

Gems Sensors Inc.
One Cowles Road
Plainville, CT 06062-1198
Tel: 860-793-4579
Fax: 860-793-4580

SPARE PARTS LIST
DELTA MIXERS

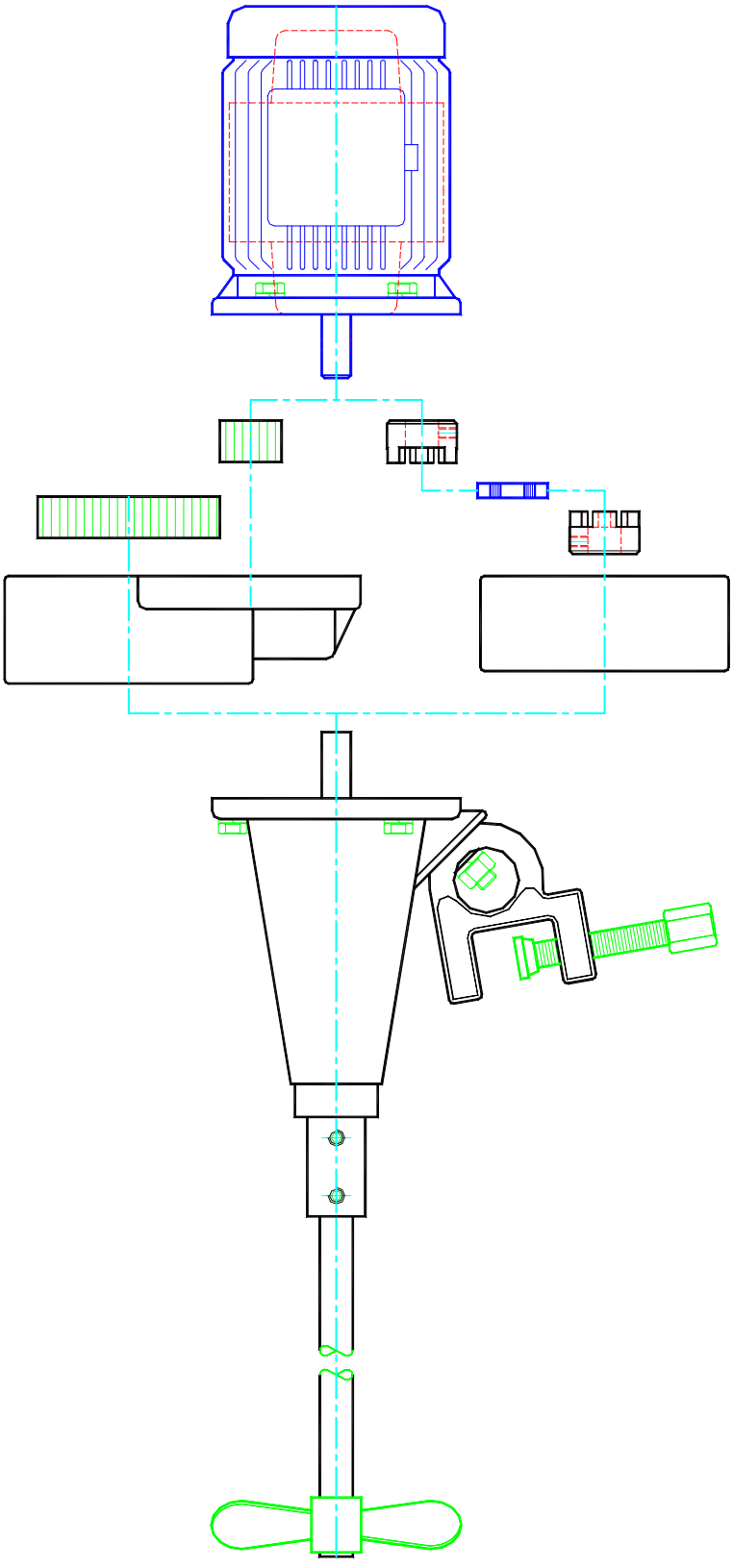

INTRODUCTION

The Delta mixer is a carefully designed piece of precision equipment which will give you years of satisfactory service under normal operating conditions.

A. INSPECTION

All Delta mixers are shipped in a specially designed carton to insure against damage in shipment. Each shaft is shipped in an individual box. Upon receipt, examine the mixer for damage; report any damage to Delta and the delivering carrier at once.

B. LUBRICATION

The outboard ball bearing [9] and upper ball bearing [8] are sealed and pre-greased for bearing life. The gear box is lubricated at the factory. To change grease, remove motor. Clean gear box and gears with solvent. Repack with recommenced grease. If lubrication of the motor is required, it will be indicated on the motor name plate.

C. MOUNTING THE MIXER

Remove the mixer from the carton and attach clamp. Rotate the clamp to an initial position such that the motor will be upright when the unit is clamped to the tank.

Place the clamp on the desired location on the tank, being certain that both the horizontal and vertical surfaces of the clamp are in contact with the top and side of the tank. Rotate the nut clockwise to tighten; counter clockwise to loosen.

D. MOUNTING MIXER SHAFT

Delta supplies standard square pitch propellers which may be put on the mixer shaft either face up or face down. Place the propellers on the end of the shaft WITHOUT THE GROOVES. If two propellers are used, they should be spaced at least two propeller diameters apart. Be certain to securely tighten the propeller set screws. Place the end of shaft with the grooves into the shaft collar until it bottoms. Tighten set screws 13 or 14.

E. ELECTRICAL CONNECTIONS

Your Delta mixer is designed to rotate clockwise when looking down on the end of the motor. This is so indicated by arrows on the mixer housing and Motor Casing.

Follow the wiring directions as indicated on the motor to obtain proper rotation.

MIXER POSITIONING

To utilize energy supplied by the mixer, a top to bottom turnover of the liquid should be created. The mixer shaft should be angled 5deg.to 15deg.off vertical wall of tank and pointed 20deg. to 30deg.right of the center line.

Moving the shaft to the left of the position described will increase swirl of vortex. This helps to submerge light powders or to aerate the mix but decreases mixing efficiency.

G. MIXER OPERATION

Delta mixers are designed for continuous operation under most normal conditions. It is not good practice to operate continuously when extreme vortexing occurs.

After mixer has been turned on and the mixing pattern developed, adjust mixer position if necessary.

After ten days of operation, check the Motor Casing screws, the clamp screw, and shaft collar screws for tightness. At the end of a mixing period, it is a good practice to turn off the mixer before the tank is drained. Turn mixer off when liquid level is one propeller diameter above lower propeller.

Parts List
Direct Drive Model PD 0-4

Description	Specification	Material	QTY
1 Motor Adaptor		AL/CI/SS	1
2 Brg. Housing		AL/CI/SS	1
3 Clamp		AL/SS	1
4 Coupling	NM-50	Steel	1
5 Key	5x5		1
6 Spindle		Steel	1
7 Clamp Stud		Steel	1
8 Top Bearing	6204-2RU		1
9 Bottom Bearing	6205-2RU		1
10 Clamp Washer		FCD-45	1
11 Clamp Screw	M12x50	316 SS	1
12 Cap Screw	M8	316 SS	4
13 Allen Screw	M8	316 SS	2
14 Shaft	3/4”	316 SS	1
15 Propeller		316 SS	1
16 Oil Seal	TC25x40x7		1
17 Oil Seal	TC35x52x7		1

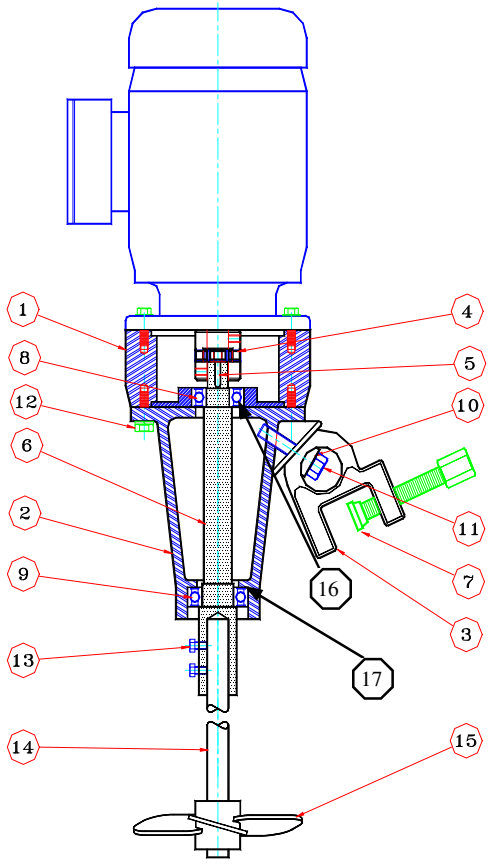

Parts List
Gear Drive Model PG 0-4

Description	Specification	Material	QTY
1 Casing		Al/CI/SS	1
2 Housing		AL/CI/SS	1
3 Clamp		AL/SS	1
4 Gear		S45C	1
5 Gear		S45C	1
6 Shaft Adapter		Steel	1
7 Clamp Stud		Steel	1
8 Bearing	6204-2RU		1
9 Bearing	6205-2RU		1
10 Washer		FCD-45	1
11 Clamp Screw	M12x50	316 SS	1
12 Cap Screw	M8	316 SS	1
13 Oil Seal	TC25x40x7	316 SS	4
14 Allen Screw	M8	316SS	2
15 Key	5x5	Steel	1
16 Shaft	3/4”	316 SS	1
17 Propeller		316 SS	
18 Oil Seal	TC35x52x7		

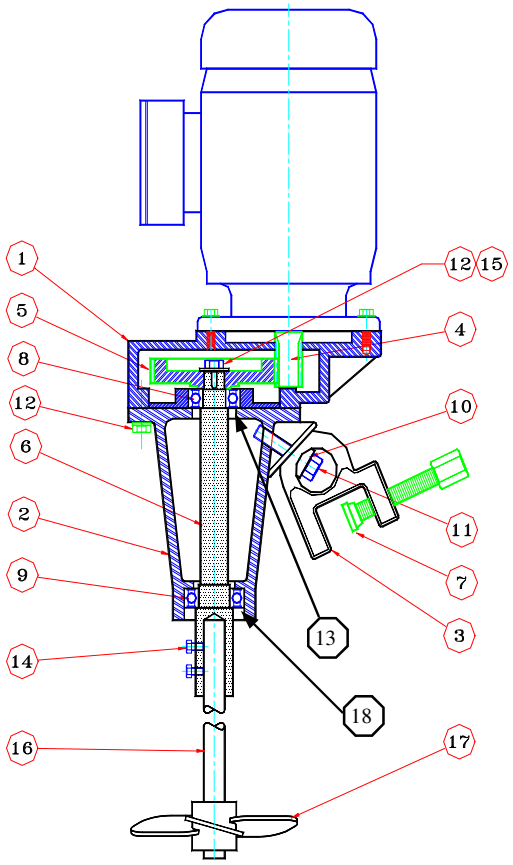

Parts List
Direct Drive Model PD 5-8

Description	Specification	Material	QTY
1 Motor Adaptor		AL/CI	1
2 Brg. Housing		AL/CI	1
3 Clamp		AL/SS	1
4 Coupling	NM-50	Steel	1
5 Key	8x7		1
6 Spindle		Steel	1
7 Clamp Stud		Steel	1
8 Top Bearing	6205-2RU		1
9 Bottom Bearing	6206-2RU		1
10 Clamp Washer		FCD-45	1
11 Clamp Screw	M12x50	316 SS	1
12 Cap Screw	M10	316 SS	4
13 Allen Screw	M10	316 SS	2
14 Shaft	1”-11/4”	316 SS	1
15 Propeller		316 SS	1
16 Oil Seal	TC30x45x7		1
17 Oil Seal	TC44x62x7		1

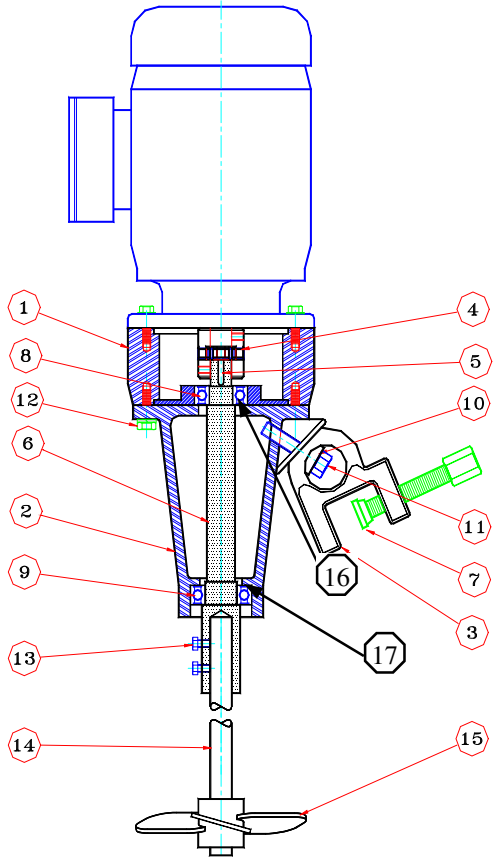

Parts List
Gear Drive Model PG 5-8

Description	Specification	Material	QTY
1 Casing		Al/CI	1
2 Housing		AL/CI	1
3 Clamp		AL/SS	1
4 Gear		S45C	1
5 Gear		S45C	1
6 Shaft Adapter		Steel	1
7 Clamp Stud	M8	Steel	1
8 Bearing	6205-2RU		1
9 Bearing	6206-2RU		1
10 Washer		FCD-45	1
11 Clamp Screw	M12x50	316 SS	1
12 Cap Screw	M10	316 SS	1
13 Oil Seal	TC30x45x7	316 SS	4
14 Allen Screw	M10	316SS	2
15 Key	8x7	Steel	1
16 Shaft	1”-11/4”	316 SS	1
17 Propeller		316 SS	
18 Oil Seal	TC44x62x7		

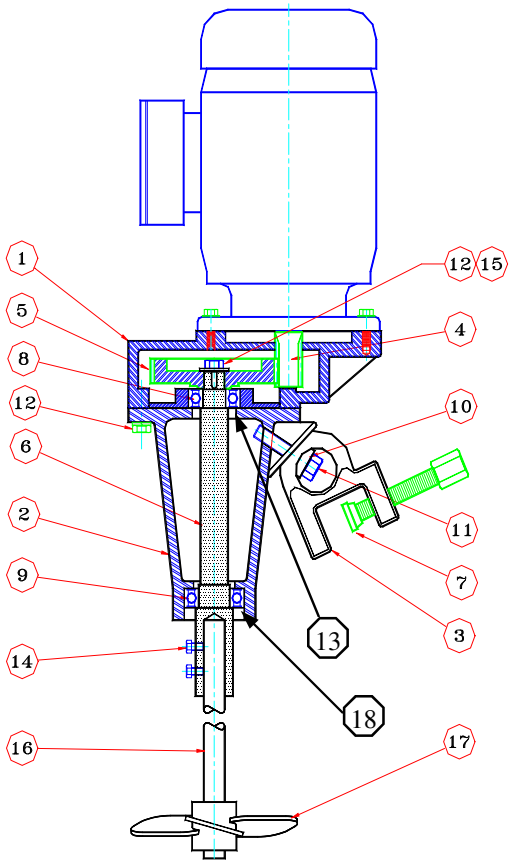

Parts List
Direct Drive Model PDF 0-4

Description	Specification	Material	QTY
1 Motor Adaptor		FC-25	1
2 Brg. Housing		FC-25	1
3 Shaft		316 SS	1
4 Top Bearing	6204-2RU		1
5 Bottom Bearing	6205-2RU		1
6 Coupling	NM-50	FC-25	1
7 Coupling	5x5	Steel	1
8 Frame Screw	M8	316 SS	4
9 Allen Screw	M8	316 SS	2
10 Spindle		FDC 45	1
11 Propeller		316 SS	1
12 Oil Seal	TC25X40X7		
13 Oil Seal	TC35X52X7		

Parts List
Gear Drive Model PGF 0-4

Description	Specification	Material	QTY
1 Motor Adaptor		FC-25	1
2 Brg. Housing		FC-25	1
3 Shaft		316SS	1
4 Top Bearing	6204-2RU		1
5 Bottom Bearing	6205-2RU		1
6 Spindle		FCD-45	1
6-7 Screw&Wash.	M8	Steel	1
8 Small Gear		S45C	1
9 Large Gear		S45C	1
10 Allen Screw	M8	316 SS	2
11 Frame Screw	M8	316 SS	4
12 Propeller		316SS	1
13 Oil Seal	TC25x40x7		
14 Oil Seal	TC35x52x7		

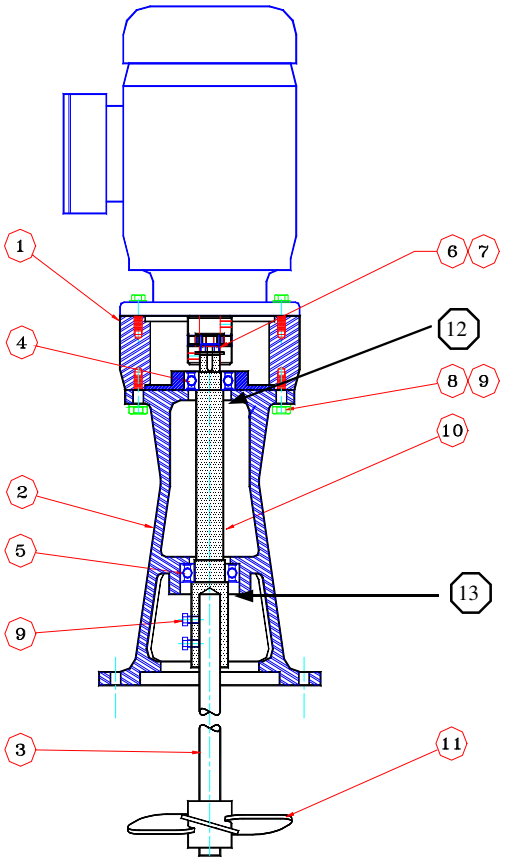

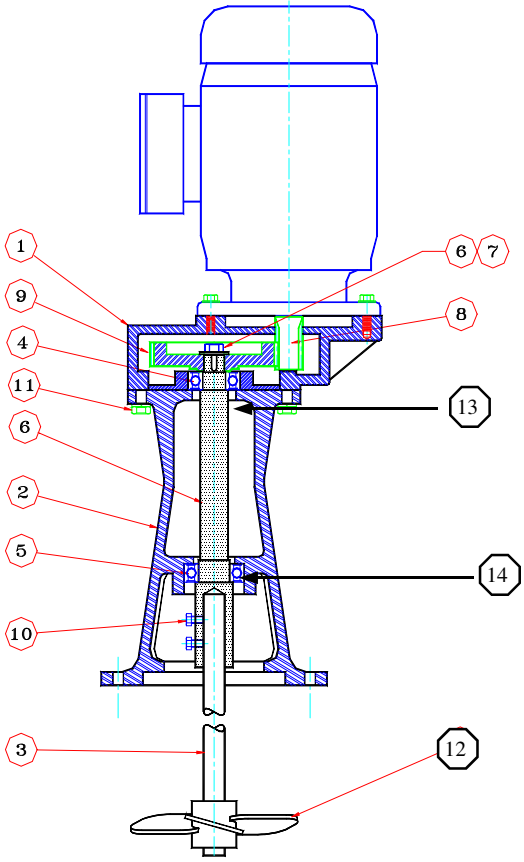

Parts List
Direct Drive Model PDF 5-8

Description	Specification	Material	QTY
1 Motor Adaptor		FC-25	1
2 Brg. Housing		FC-25	1
3 Shaft		316 SS	1
4 Top Bearing	6205-2RU		1
5 Bottom Bearing	6206-2RU		1
6 Coupling	NM-50	FC-25	1
7 Coupling	NM-50	Steel	1
8 Frame Screw	M8	316 SS	4
9 Allen Screw	M10	316 SS	2
10 Spindle		FDC 45	1
11 Propeller		316 SS	1
12 Oil Seal	TC30X45X7		
13 Oil Seal	TC44X62X7		

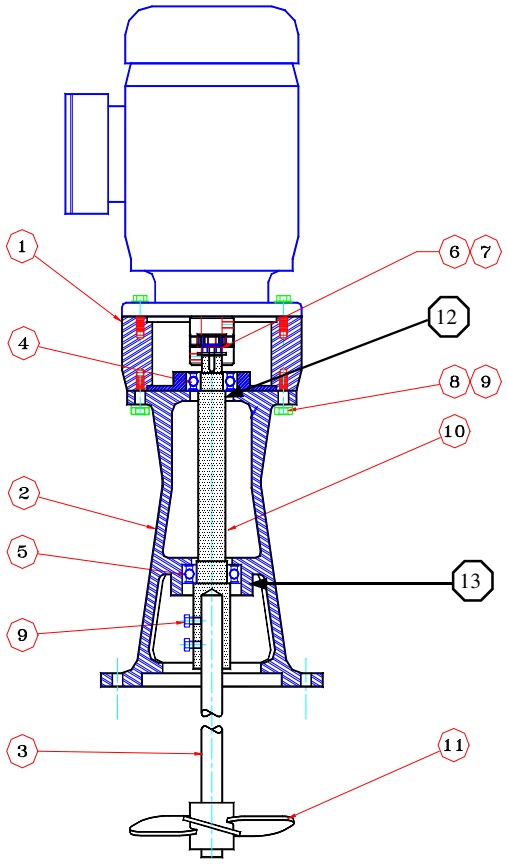

Parts List
Gear Drive Model PGF 5-8

Description	Specification	Material	QTY
1 Motor Adaptor		FC-25	1
2 Brg. Housing		FC-25	1
3 Shaft		316SS	1
4 Top Bearing	6205-2RU		1
5 Bottom Bearing	6206-2RU		1
6 Screw Washer			1
7 Screw	M8	Steel	1
8 Small Gear		S45C	1
9 Large Gear		S45C	1
10 Allen Screw	M10	316 SS	2
11 Frame Screw	M8	316 SS	4
12 Propeller		316SS	1
13 Spindle		Steel	1
14 Oil Seal	TC30x45x7		
15 Oil Seal	TC44x62x7		

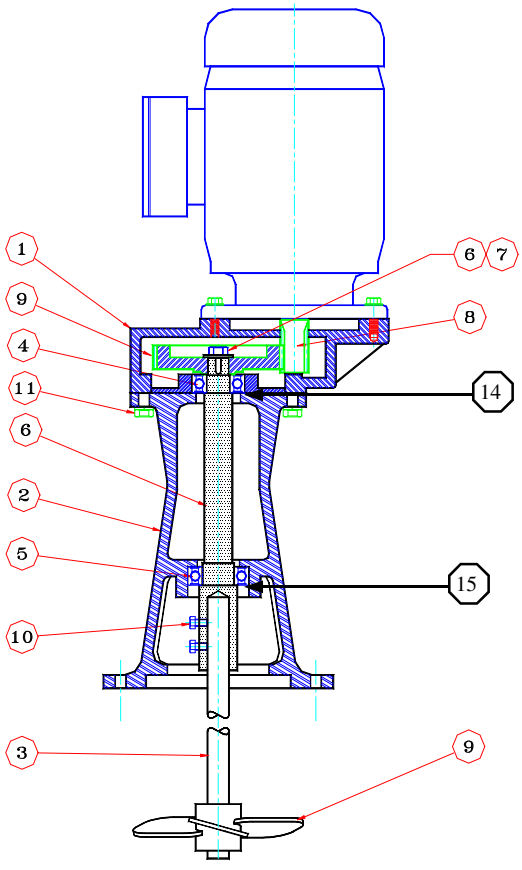

Notes

Proper Mixer Positioning

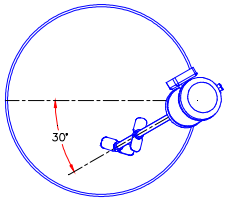

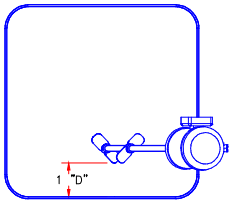

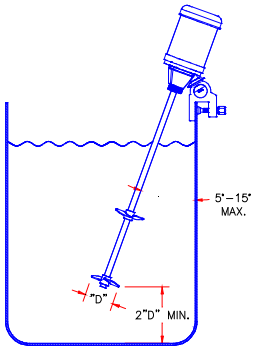

"T" = TANK DIAMETER

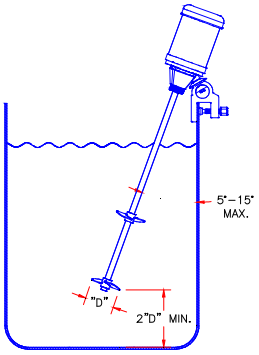

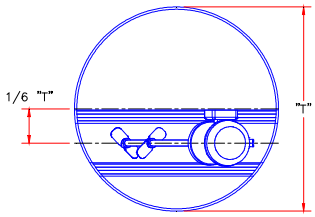

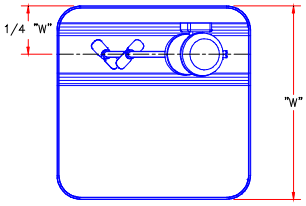

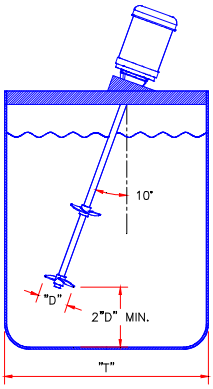

"D" = IMPELLER DIAMETER

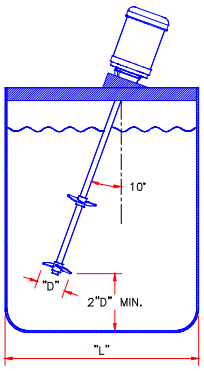

DELTA EQUIPMENT
A DIVISION OF PBH INDUSTRIES LTD.

2400-4 Wyecroft Rd. Oakville, ON L6L 6M8
Ph. 905.827.9312 Fax. 905.827.9318
website www.deltamixers.com **e-mail more@deltamixers.com**

MOYNO
Always the Right Solution™

SERVICE MANUAL
MOYNO® 500 PUMPS
300 SERIES MOTORIZED
331, 332, 333, AND 344 MODELS

DESIGN FEATURES

Housing:	Cast iron/316 SS
Pump Rotor:	Chrome plated AISI 416 stainless steel/Chrome plated 316 stainless steel
Pump Stator:	NBR (Nitrile)
Seal:	Mechanical (carbon/ceramic)
Motor Shaft:	AISI 416 stainless steel/ANSI 316 stainless steel
Motor:	1/2 HP, 60 Hertz, 1725 rpm, totally enclosed, fan cooled (TEFC) C-Faced, 1 phase 115/230V or 3 phase 230/460V (other motor options available; consult sales representative)

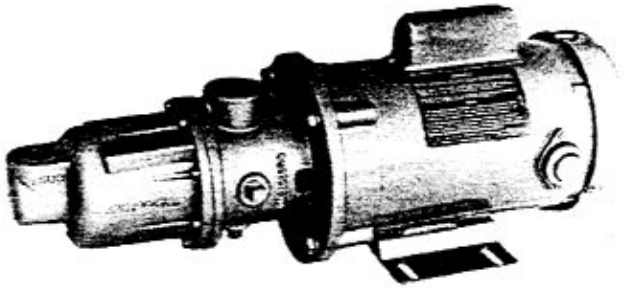

Note: Alternate elastomers available. Refer to Repair/Conversion kit numbers pages 3 and 4.

INSTALLATION

Mounting Position. Pump may be mounted in any position. When mounting vertically, it is necessary to keep bearings above seals to prevent possible seal leakage into bearings.

Pre-Wetting. Prior to connecting pump, wet pump elements and mechanical seal by adding fluid to be pumped into suction and discharge ports. Turn pump over several times in a clockwise direction to work fluid into pump elements.

Piping. Piping to pump should be self-supporting to avoid excessive strain on pump housings. See Table 1 for suction and discharge port sizes of each pump model. Use pipe "dope" or tape to facilitate disassembly and to provide seal on pipe connections.

Electrical. Follow the wiring diagram on the motor nameplate or inside the terminal box for the proper connections. The wiring should be direct and conform to local electrical codes. Check power connections for proper voltage. Voltage variations must not exceed ±10% of nameplate voltage. Motor is provided with internal automatic overload protection.

To prevent damage to pump, pump rotation must be clockwise when facing pump from motor end.

OPERATION

Self-Priming. With wetted pumping elements, the pump is capable of 25 feet of suction lift with pipe size equal to port size. Be sure suction lines are air tight or pump will not self prime. Self-priming capabilities will vary due to fluid viscosity.

DO NOT RUN DRY. Unit depends on liquid pumped for lubrication. For proper lubrication, flow rate should be at least 10% of rated capacity.

Pressure and Temperature Limits. See Table 1 for maximum discharge pressure of each model. Unit is suitable for service at temperatures shown in Table 2.

Storage. Always drain pump for extended storage periods by removing bottom drain plug in pump body.

Caution: Suction pressure should never be greater than discharge pressure.

Table 1. Pump Data

Pump Model	Suction Port (NPT)	Discharge Port (NPT)	Voltage Rating (VAC)	Discharge Pressure (psig)
331	3/4	3/4	See Motor Name Plate For Voltage Ratings	150
332	3/4	3/4	See Motor Name Plate For Voltage Ratings	100
333	3/4	3/4	See Motor Name Plate For Voltage Ratings	50
344	3/4	3/4	See Motor Name Plate For Voltage Ratings	†30

†With *3/4* HP motor, pressure is 40 psig.

Table 2. Temperature Limits

Elastomer	Temperature Limits
*NBR	10°-160°F
*EPDM	10°-210°F
*FPM	10°-240°F

*NBR = Nitrile
EPDM = Ethylene-Propylene-Diene Terpolymer
FPM = Fluoroelastomer

TROUBLESHOOTING

WARNING: Before making adjustments, disconnect power source and thoroughly bleed pressure from system prior to disassembly. Failure to do so could lead to electric shock or serious bodily harm.

Failure To Pump.

1. Motor will not start: Check power supply. Voltage must be ± 10% of nameplate rating when motor is in locked rotor condition. Check for faulty capacitor on 1 phase Models.
2. Motor runs and thermally kicks out: Check for excessive discharge pressure. Check for defective centrifugal switch on 1 phase Models. Increase ventilation to motor. Do not use less than #14 wire size.
3. Stator torn; possible excessive pressure: Replace stator, check pressure at discharge port.
4. Flexible joint broken; possible excessive pressure:

   Replace joint, check pressure at discharge port.
5. Wrong rotation (3 phase only): Rotation must be clockwise when facing pump from motor end. Reverse the connections of any two line leads to the motor.
6. Excessive suction lift or vacuum.

Pump Overloads.

1. Excessive discharge pressure: Check pressure at discharge port for maximum ratings given in Table 1.
2. Fluid viscosity too high: Limit fluid viscosity to 100 CP or 500 SSU.

Noisy Operation.

1. Excessive suction lift or vacuum: Maximum suction lift is 25 feet for water.
2. Suction line too small: Check pipe size. Be sure lines are free from obstructions.
3. Pump Cavitates: Pump speed is 1725 rpm. Viscosity of fluid should not exceed 100 CP or 500 SSU.
4. Flexible joint worn: Replace joint. Check pressure at discharge port.
5. Insufficient mounting: Mount to be secure to a firm base. Vibration induced noise can be reduced by using mount pads and short sections of hose on suction and discharge ports.

Seal Leakage.

1. Leakage at startup: If leakage is slight, allow pump to run several hours to let faces run in.
2. Persistent seal leakage: Faces may be cracked from freezing or thermal shock. Replace seal.

Pump Will Not Prime.

1. Air leak on suction side: Check pipe connections.

PUMP DISASSEMBLY

WARNING: Before disassembling pump, disconnect power source and thoroughly bleed pressure from system. Failure to do so could result in electric shock or serious bodily harm.

1. Remove suction and discharge piping. Drain pump body by removing drain plug (261B).
2. Remove screws (112) holding suction housing (2) to discharge housing (1). Remove suction housing (2) and stator (21).
3. Remove rotor (22) from flexible joint (24) by turning counterclockwise (RH thread). On pinned, 3 phase models, remove rotor pin (45) with suitable punch.
4. Flexible joint (24) can be removed from motor shaft by using a 3/16 allen wrench in end of joint and turning counterclockwise. On 3 phase motors, remove motor pin (46) with suitable punch, then remove joint:
5. Slide mechanical seal (69) off motor shaft.
6. Remove discharge housing (1) from adaptor flange (12) by removing screws (1 12B).
7. Carefully pry seal seat out of discharge housing (1). If any parts of mechanical seal are worn or broken, the complete seal assembly should be replaced. Seal components are matched parts and are not interchangeable.
8. Remove adapter flange (12) from motor (70) by removing screws (112A).
9. Remove slinger ring (77).

PUMP ASSEMBLY

1. Install slinger ring (77).
2. Attach adaptor flange (12) to motor housing using screws (112A).
3. Attach discharge housing (1) to adaptor flange (12) using screws (1128). Be sure to center seal bore on shaft.
4. Install mechanical seal (69) in discharge housing (1) using the following procedure:
   a. Clean and oil sealing faces using clean oil (not grease).

Caution: Do not use oil on EPDM parts. Substitute glycerin or soap and water.

   b. Oil outer surfaces of the seal seat, and push assembly over the motor shaft and into the discharge housing (1) seating it firmly and squarely.
   c. After cleaning and oiling the shaft, slide the seal body along the motor shaft until it meets the seal seat.
   d. Install seal spring and spring retainer on shaft.
5. Thread flexible joint (24) into motor shaft in a clockwise direction (RH thread). Tighten with 3/16 allen wrench. On 3 phase models, install motor pin (46).
6. Thread rotor (22) onto flexible joint (24) in a clockwise direction (RH thread). On 3 phase models, install rotor pin (45).
7. Slide stator (21) on rotor (22). On 331 & 332 models, insert rounded end of stator ring (135) into end of stator prior to installing stator on rotor.
8. Secure stator (21) and suction housing (2) to discharge housing (1) using screws (112).
9. Lubricate rotor and stator by filling Suction housing and discharge housing with fluid to be pumped.
10. Connect Suction and discharge piping and power source.

PARTS LIST

To determine part numbers for all parts except standard motors, enter table with item number from pump illustration. Then locate part number under applicable model number (first three digits). Parts listed down the center are applicable to all pump models. To determine part numbers for standard motor (item 70), enter table at item 70 with the last two digits of model number: motor description and part number are on that line.

Item No.	Description	Pump Model Numbers			
		331	332	333	344
1	Discharge Housing	Cast Iron 350-1016-000/Stainless Steel 350-1016-007			
2	Suction Housing	Cast Iron 330-1064-002/Stainless Steel 330-1911-002			
*21	Stator	340-3501-120	340-3502-120	340-3503-120	340-3504-120
*22	Rotor (Threaded) 416 S5	320-2729-000	330-0906-000	320-1394-000	320-1841-000
*22	Rotor (Pinned) 416 SS	320-2729-004	320-4559-004	320-1584-002	320-1569-002
24	Flexible Joint (Threaded)	Carbon Steel 320-1511-000/Stainless Steel 320-3759-000			
240	Flexible Joint (Pinned)	Carbon Steel 320-1612-000/Stainless Steel 320-4415-000			
*45	Shaft Pin (2 req.)	320-4069-002			
*69	Mechanical Seal	320-2424-000			
70	Standard Motor				
	-59 1PH TEFC 1750 RPM	330-4529-000			
	-60 3PH TEFC 1750 RPM, Pin	330-4528-100			
	-52 1PH TEFC 1750 RPM	330-4529-1 00			
	-50 3PH TEFC 1750 RPM	330-4528-003			
77	Slinger Ring	320-6382-000			
112	Screw, Cap (8 req.)	Carbon Steel 619-1430-103 (10-24 x 5/8)/Stainless Steel 619-1432-120 (10-24 x 3/4)			
112A	Screw, Hex Hd (4 req.)	Carbon Steel 619-1530-161 (3/8-16 x 1)/Stainless Steel 320-6715-005 (3/8-16 x 1)			
135	Stator Ring	Carbon Steel 320-7812-000 /Stainless Steel 362-1774-000			
215	Lock Washer (8 req.)	320-6464-000			
215A	Lock Washer (4 req.)	Carbon Steel 623-0010-411/Stainless Steel 320-6717-002			
261	Pipe Plug, 1/4 NPT	Carbon Steel 610-0120-021/Stainless Steel 610-0420-020			
	Rotor (Threaded) 316 SS	320-2933-000	320-2942-000	320-2936-000	320-2934-000
	Rotor (Pinned) 316 SS	320-2933-002			

*Recommended spare parts.
Used on 3 phase models.

REPAIR/CONVERSION KIT NUMBERS

Item No.	Description	All 331 Models (Threaded Only)			All 332 Models (Threaded Only)		
		NBR	EPDM	FPM	NBR	EPDM	FPM
—	Kit No.	311-9026-000	311-9025-000	311-9054-000	311-9027-000	311-9038-000	311-9055-000
21	• Stator	340-3501-120	340-3501-320	340-3501-520	340-3502-120	340-3502-320	340-3502-520
24	• Joint	*320-1511-000	320-6367-000	320-4670-000	*320-1511-000	320-6367-000	320-4670-000
69	• Seal	320-2424-000	320-6379-000	320-6501-000	320-2424-000	320-6379-000	320-6501-000
		All 333 Models (Threaded Only)			All 344 Models (Threaded Only)		
Item No.	Description	NBR	EPDM	FPM	NBR	EPDM	FPM
—	Kit No.	311-9029-000	311-9028-000	311-9056-000	311-9031-000	311-9030-000	311-9057-000
21	• Stator	340-3503-120	340-3503-320	340-3503-520	340-3504-120	340-3504-320	340-3504-520
24	• Joint	*320-1511-000	320-6367-000	320-4670-000	*320-1511-000	320-6367-000	320-4670-000
69	• Seal	320-2424-000	320-6379-000	320-6501-000	320-2424-000	320-6379-000	320-6501-000

NBR = Nitrile
EPDM = Ethylene-Propylene-Diene Terpolymer
FPM = Fluoroelastomer
*Carbon steel joint, for 316 SS joint use 320-3759-000.

REPAIR/CONVERSION KIT NUMBERS (CONT.)

		All 331 Models (Pinned Only)			All 332 Models (Pinned Only)		
Item No.	**Description**	**NBR**	**EPDM**	**FPM**	**NBR**	**EPDM**	**FPM**
–	Kit No.	311-9104-000	311-9108-000	311-9112-000	311-9105-000	311-9109-000	311-9113-000
21	• Stator	340-3501-120	340-3501-320	340-3501-520	340-3502-120	340-3502-320	340-3502-520
24	• Joint	*320-1612-000	320-6973-000	320-6984-000	*320-1612-000	320-6973-000	320-6984-000
69	• Seal	320-2424.000	320-6379-000	320-6501-000	320-2424-000	320-6379-000	320-6501-000
45	• Pin (2 req.)	320-4069-002			320-4069-002		
		All 333 Models (Pinned Only)			**All 344 Models (Pinned Only)**		
Item No.	**Description**	**NBR**	**EPDM**	**FPM**	**NBR**	**EPDM**	**FPM**
–	• Kit No.	311-9106-000	311-9110-000	311-9114-000	311-9107-000	311-9111~000	311-9115-000
21	• Stator	340-3503-120	340-3503-320	340-3503-520	340-3504-120	340-3504-320	340-3504-520
24	• Joint	*320-1612-000	320-6973-000	320-6984-000	*320-1612-000	320-6973-000	320-6984-000
69	• Seal	320-2424-000	320-6379-000	320-6501-000	320-2424-000	320-6379-000	320-6501-000
45	Pin (2 req.)	320-4069-002			320-4069-002		

ABRASION RESISTANT SEALS

Elastomer	All 331 – 334 Models
NBR	320-6460-000
EPDM	320-6502-000
FPM	320-6503-000

NBR = Nitrile
EPDM = Ethylene-Propylene-Diene Terpolymer
FPM = Fluoroelastomer
*Carbon steel joint, for 316 SS joint use 320-4415-000.

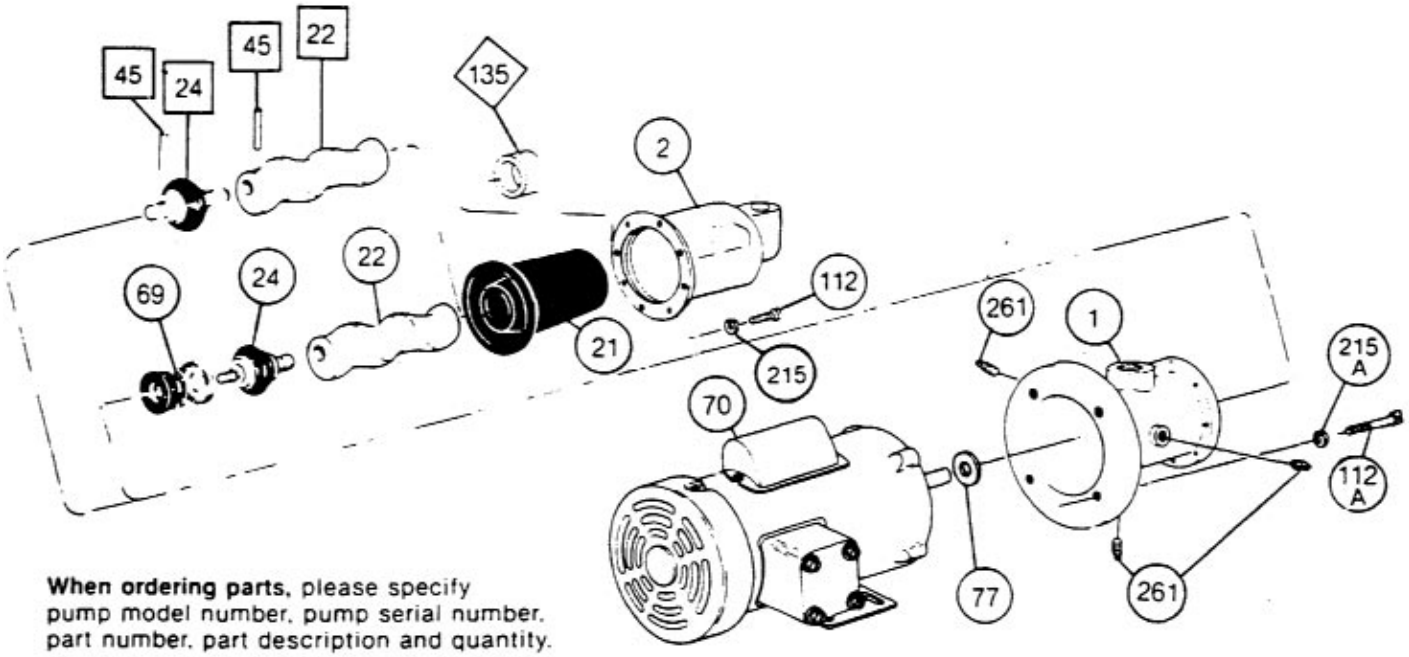

When ordering parts, please specify pump model number, pump serial number, part number, part description and quantity.

◇ Used only on 331 & 332 Models.

□ Used on 3 Phase Models

© 1999 by Moyno, Inc.
® Moyno is a registered trademark of Moyno, Inc.

Printed in U.S.A.

TECO Westinghouse

OPERATION & MAINTENANCE MANUAL FOR THREE PHASE INDUCTION MOTORS

TECO-Westinghouse Motor Company
5100 North IH-35
Round Rock, Tx. 78681

INDEX PAGE

1. INTRODUCTION…… 1
2. ACCEPTING, INSPECTION, STORAGE, TRANSPORTATION…… 2
3. INSTALLATION…… 4
   3.1 Site and environment for motor installation…… 4
   3.2 Foundation…… 4
   3.3 Installation of shaft coupling…… 6
   3.4 Installation of belt drive…… 9
   3.5 Conveyance with chain or gear…… 10
   3.6 Electrical connections…… 11
4. OPERATION…… 12
   4.1 Examination before starting…… 12
   4.2 Starting operation…… 15
5. MAINTENANCE…… 17
   5.1 Major points in regular inspection and maintenance…… 17
   5.2 Motor windings…… 18
   5.3 Cleaning of the interior of the motor…… 18
   5.4 Cleaning of the exterior of the motor…… 19
   5.5 Maintenance of anti-friction bearings…… 19
      5.5.1 Frequency of re-lubrication…… 19
      5.5.2 Kinds of grease…… 20
      5.5.3 Grease quantity…… 20
      5.5.4 Re-greasing…… 20
      5.5.5 Oil re-lubrication…… 22
      5.5.6 Cleaning and installation of bearings…… 23
   5.6 Maintenance of sleeve bearings…… 24
      5.6.1 Daily inspection…… 24
      5.6.2 Regular examination…… 24
      5.6.3 Disassembly…… 25
      5.6.4 Re-assembly…… 26
   5.7 Maintenance of slip rings (for Wound Rotor only)…… 27
   5.8 Maintenance of non-reverse ratchet mechanism (Vertical Motors only) 29
6. FAULT FINDING AND RECOGNITION…… 31

1. INTRODUCTION

This and the following instruction address the more common situations encountered in motor installation, operation and maintenance. For the TWMC motor warranty to be and to remain in effect, the motor must be installed and operated in strict accordance with the outline drawing, motor nameplates and these instructions and must not be altered or modified in any unauthorized manner.

During the installation and operation of motors in heavy industrial applications there is a danger of live electrical parts and rotating parts. Therefore to prevent injury and/or damage the basic planning work for installation, transportation, assembly, operation, etc... needs to be done and checked by authorized and competent personnel only.

Since these instructions cannot cover every eventuality of installation, operation and maintenance, the following points should be considered and checked.

- The technical data and information on permissible use such as assembly, connection, ambient and operating conditions given in the related catalogue, operating instructions, nameplates and other production documentation.
- The general erection and safety regulations.
- The local and plant-specific specifications and requirements.
- The proper use of transport, lifting devices and tools.
- The use of personal protective equipment.

Following indications should be observed when reading these instructions.

Safety instructions are marked as follows:

Warning of electric hazards for personnel.

Warning of dangers for personnel.

ATTENTION!
Warning of damage for the motor or installation.

2. ACCEPTING, INSPECTION, STORAGE, TRANSPORTATION

Inspection upon receipt
Check to following points upon receipt:

- Are the nameplate ratings identical with what you ordered?
- Are dimensions and color in compliance with your specifications?
- Are the nameplate ratings for space heater, thermal protector, temperature detector, etc. identical with what you ordered?
- Is there any damage?
- Are all accessories and accompanying instruction manuals in good order?
- Please ensure that the arrow head indicator really indicates direction of rotation.
- If there are any specific requirements, please ensure they are in conformity with your specifications.

2.1 Storage
When motors are not in operation, the following precautionary measures should be undertaken to assure best performance.

2.2 Place
(a) High and dry, well ventilated without direct sun, dust or corrosive gas.
(b) Not located near to a boiler or freezer.
(c) Entirely free form vibration and easy for movements.
(d) Motors should be put on pallets to prevent moisture.

2.3 Moisture prevention
Since moisture can be very detrimental to electrical components, the motor temperature should be maintained about 3ºC above the dew point temperature by providing either external or internal heat. If the motor is equipped with space heaters, they should be energized at the voltage shown by the space heater nameplate attached to the motor. Incandescent light bulbs can be placed within the motor to provide heat. However, if used, they must not be allowed to come in contact with any parts of the motor because of the concentrated hot spot that could result.

2.4
Even during storage, the insulation resistance should be kept above the specified values.
(a) For measurement of insulation resistance and acceptable standard values, please refer to measures stated in 3.1.2 “Measurement of insulation resistance”.
(b) Insulation resistance test should be performed once every three months.

2.5

If the motor is not in operation for a long period (one week and above) after installation or has been in operation but stopped for a period of time, the following precautions must be taken.

(a) Protect the motor as measures stated in 2.2.3.
(b) Insulation resistance test should be performed as stated in 2.2.4.

2.6 Bearing protection

(a) If the motor has been provided with a shaft shipping brace to prevent shaft movement during transit, it must be removed before operating the motor. It is very important that this brace be re-installed exactly as it was originally, before the motor is moved form storage or any time when the motor is being transported. This prevents axial rotor movement that might damage the bearings.
(b) Motors equipped with sleeve bearings are shipped from the factory with the bearing oil reservoirs drained. In storage, the oil reservoirs should be properly filled to the center of the oil level gauge with a good grade of rust inhibiting oil. To keep the bearing journals well oiled and to prevent rusting, the motor shaft should be rotated several revolutions about every month ensuring the shaft does not come to rest in its original position. While the shaft is rotating, it should be pushed to both extremes of the endplay.
(c) Motors with anti-friction bearings are properly lubricated with the correct grade of grease at the factory and no further greasing is required in storage. The shaft should be rotated several revolutions about every month to maintain proper distribution of the grease within the bearings.
(d) Tilt-pad bearings are a type of sleeve bearing used in special design applications. Due to the nature of this bearing, a loose oil ring for delivering lubricant cannot be provided. Therefore, during the storage internal, oil must be periodically manually introduced into the pads and housing to prevent the occurrence of oxidation of the precision machined components.
    (1) Remove the pipe plug from the bearing cap located above the tilt-bearing shell.
    (2) Pour in approximately one cup of oil every month and rotate the shaft a few revolutions about every two (2) weeks.
    (3) For long periods of storage, the oil that accumulates in the housing should be removed.

ATTENTION!
Care should be taken to keep parts such as fitting surfaces, key, shaft extension and axial central hole from any collision with foreign matter. Grease should also be generously applied to prevent rusting.

2.7 Transportation

To keep the rotating parts of motors from moving, thus preventing damage and scratching during transportation, they should be held securely with a locking device. Remove all transit clamps before operating the motor. It is very important that this device be reinstalled exactly as it was originally, before the motor is moved from storage or any time when the motor is being transported. The vertical mounting type motors should be transported in the vertical position.

Do not use the hoisting hook/eyebolts to lift more that the motor itself. They are designed to support the motor only. Make sure the hoisting hook is correctly attached to the eyebolt(s)/lug(s) are fully screwed in before hoisting. Also note such parts as fan cover, ventilation box, bracket, slip-ring, etc. may have their own hoisting lugs which can only carry their own weight. Nothing extra should be attached while hoisting.
Do not twist the steel wires and make sure the eyebolts have been firmly screwed and the sling angle is correct.

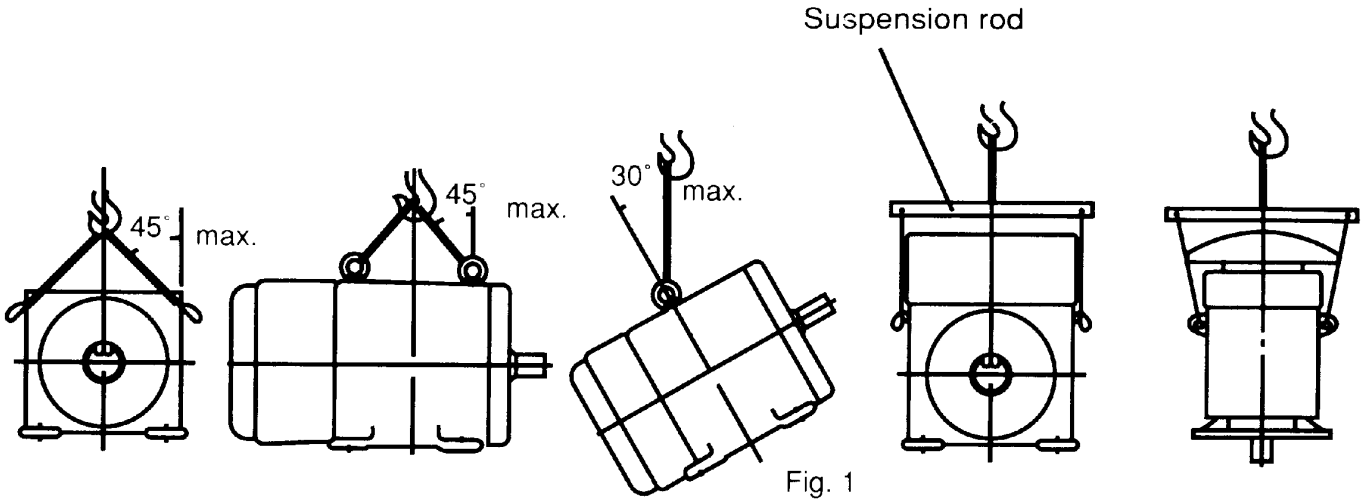

Fig. 1

3 INSTALLATION

Site and environment for motor installation

3.1.1

Standard environment and site conditions for the installation of motors are usually set as follows:

(a) Ambient temperature: -10~40ºC
(b) Humidity: Relative humidity below 90%RH for totally enclosed types, and below 80%RH for semi-enclosed types.
(c) Elevation: below 1000 meters or 3300 feet.
(d) Harmful gases, liquids, dusts, high moisture should be absent.
(e) Foundations should be strong and free of vibration.

If there are any special environmental conditions, please inform TWMC prior o ordering.

3.1.2 Ventilation and space

(a) Installation area should be well ventilated.
(b) The installation space should be large enough to facilitate heat dissipation and maintenance.

3.2 Foundation

3.2.1

Use rigid and solid sole plate or common bed as foundation.
For best motor performance, it is advisable to use a sole plate or common bed, particularly when using a shaft coupling.

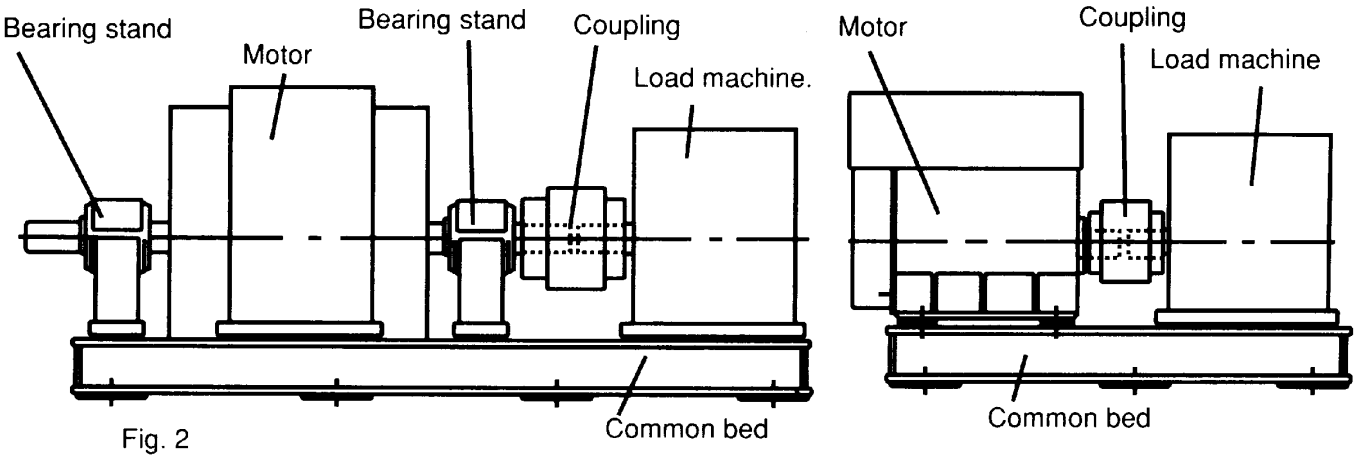

Fig. 2

3.2.2 Installation

(a) Select an appropriate foundation surface for the sole plate or common bed, which will be, considered the ultimate level.
(b) Align the position of the common bed with reference to that level.
(c) Align the level accuracy at least at four points such as bearing mounting, shaft extension etc. The accuracy should be within 0.04mm or .0015 inches
(d) Sole plate or common bed should be embedded in concrete foundation as illustrated in Fig. 3. Stiff pads should also be installed beneath the wedges, which are welded together at various spots about 400-500mm (15.75-19.70 inches) apart etc., to enable the foundation to carry evenly the weight of the whole motor.
(e) The base should be sturdy and rigid to keep it flat and level.
(f) Make sure the mortar and concrete are completely dry, and the precision of the level is acceptable, and then set the motor on the mounting foundation.
(g) Accurately install shaft couplings, belt sheaves etc., then weld the wedges solid to prevent untoward change in position.

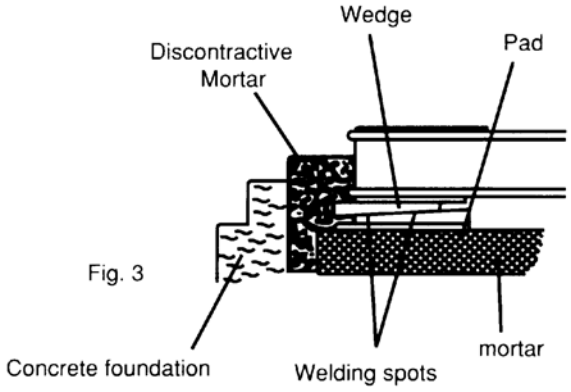

Fig. 3

3.2.3 The foundation of vertical induction motors: (Also the foundation of pump)

(a) Foundation of motor/pump must be rigid and secure to provide adequate support. There must be no vibration, twisting, misalignment etc. due to inadequate foundations.
(b) A massive concrete foundation is preferred in order to minimize vibration. Rigidity and stability are enhanced by prop plate and foundation bolt. As shown in Fig. 4.

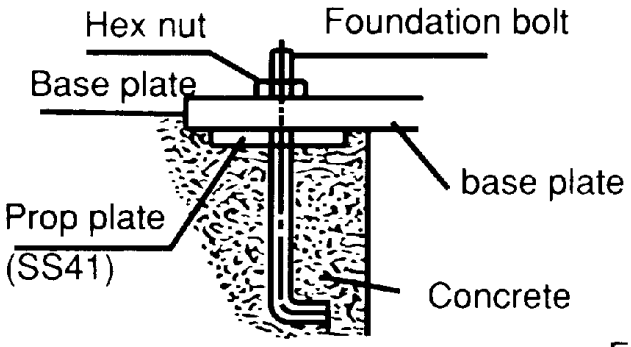

Fig. 4

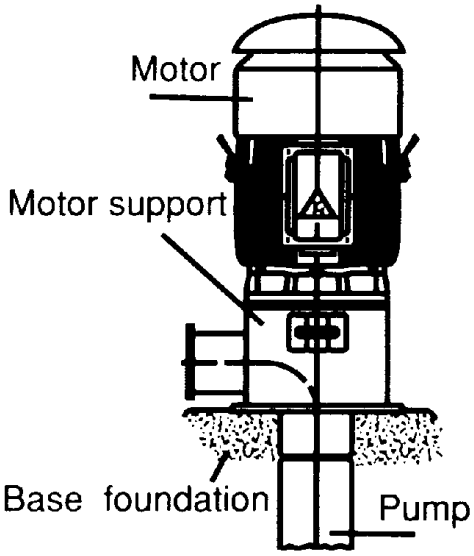

Fig. 5

3.2.4 Installation of vertical motors:

(a) All mounting surfaces must be clean and level.
(b) Foundation must be leveled at least at 4 points and guaranteed to be below 0.04mm (.0015 in.) flat and level.
(c) Make sure the mortar and concrete are completely dry, and the precision of the level is acceptable, and then set the motor on the mounting foundation.
(d) Accurately install shaft couplings.

3.3 Installation of shaft coupling

ATTENTION!
Motors must always be accurately aligned, and this applies especially where they are directly coupled.
Incorrect alignment can lead to bearing failure, vibration and even shaft fracture. As soon as bearing failure or vibration is detected, the alignment should be checked.

3.3.1

Field application of a coupling to the motor shaft should follow the procedures recommended by the coupling manufacturer. The motor shaft extension must not be subjected to either extreme heat or cold during coupling installation.

ATTENTION!
Basically, the coupling should be heated and pushed onto the shaft extension with slight axial force. Do not hammer coupling to prevent bearing damage.

3.3.2

Although the sleeve bearings are equipped with thrust faces, these are intended only to provide momentary axial restraint of rotor movement either during start-up or when operating the motor disconnected from the driven equipment. They must not be operated under a constant thrust load unless they were originally designed for this condition.

Motors with either sleeve or anti-friction bearings are suitable for connection to the driven load through a flexible coupling. Coupling solidly to the load is not acceptable. With sleeve bearings, the flexible coupling should be of the limited end float type to prevent the possibility of any end thrust from load being transmitted to the motor bearings, which could cause bearing damage. The recommended limits of end float are as follows:

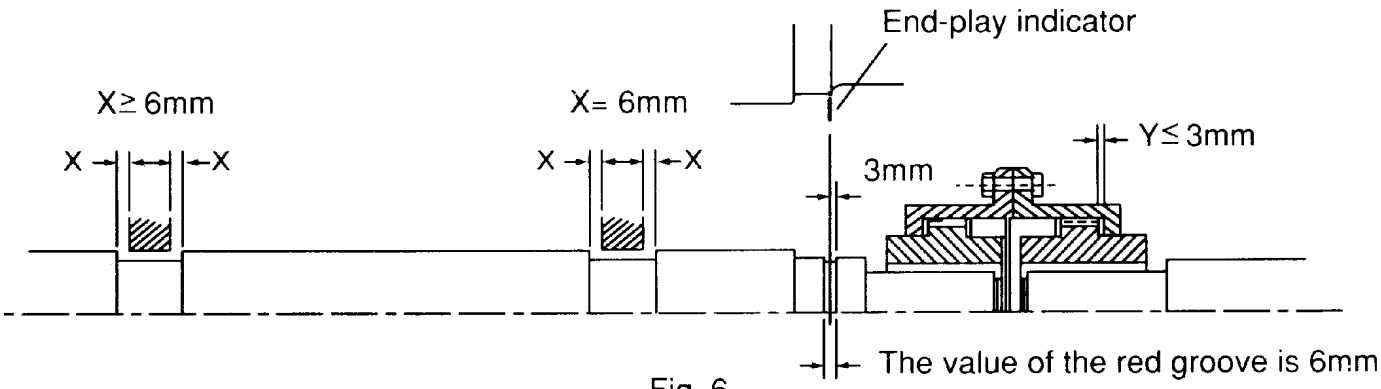

Fig. 6

(a) When the motor is in operation after installation, be sure that the end-play indicator is within the 6mm (.236 in.) of the groove on the shaft or aligned to the shaft shoulder immediately outboard of the drive-end bearing to assure there is low friction between shaft and bearing.

(b) Unless otherwise specified, the designed end-play value X of the groove for TWMC motors in general is within 6mm (.236 in.) as illustrated in Fig. 6. In essence, the endplay indicator is adjusted to point at the center of the groove or the drive-end shaft shoulder; thus X equals to 6±1mm or so, and the endplay value (Y) of the couplings should equal or be smaller than 3mm (.118 in.).

(c) If the desired value Y is grater than 3mmm (.118 in.) caused for instance by a thrust load and/or load machine with large end-play, please inform TWMC prior to entering an order.

3.3.3

In aligning the motor (and rotor) axially with the driven equipment, consideration should be given not only to the endplay indicator position but also to axial shaft expansion and increase in shaft centerline height due to thermal effects. In general, the axial shaft growth for motors can be disregarded since neither bearing is fixed and any shaft growth due to temperature increase will produce an elongation away from the coupling.

Shaft height growth (change in shaft centerline elevation) for TEFC machines can be calculated as follows:

$$\Delta=(0.0005”) \times (\text{motor foot to shaft £ dimension})$$

For non-TEFC machines, divide the number by 2.

3.3.4

It is desirable, in normal operation that the motor operates on its magnetic center, so that no axial force is exerted on the coupling.

The motor shaft and the driven shaft should be aligned within the following tolerances in both angular and parallel alignment:

Unit: mm

TIR	Range of rotating speed	Solid coupling	Flexible coupling
C	2500 rpm and above	0.03	0.03
	Below 2500 rpm	0.04	0.05
A	2500 rpm and above	0.03	0.03
	Below 2500 rpm	0.03	0.04

Angular misalignment is the amount by which the centerlines of driver and driven shafts are skewed. It can be measured using a dial indicator set up as shown in Fig. 7. The couplings are rotated together through 360 degrees so that the indicator does not measure runout of the coupling hub face. The shafts should be forced against either the in or out extreme of their end float while being rotated.

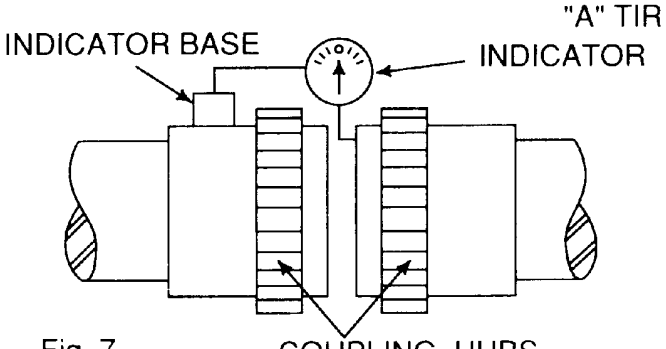

Fig. 7

TIR=Total indicator reading (by dial indicator)

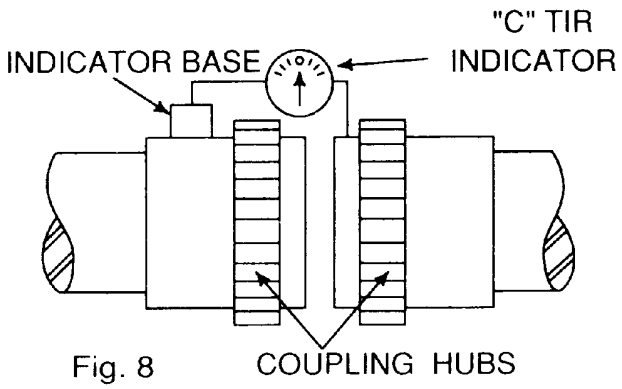

Fig. 8

Parallel misalignment is the amount by which the centerlines of the driver and driven shafts are out of parallel. It can be measured using a dial indicator set up as shown in Fig. 8. Again, the couplings are rotated together through 360 degrees so that the indicator does not measure runout of the coupling hub outside diameter.

3.3.5

After the motor has been properly aligned with the driven equipment and the hold-down bolts have been installed and tightened, for motors with fabricated frames, at least two dowel pins should be installed in two diagonally opposite motor feet.

3.3.6 Installation of shaft coupling: (Vertical hollow shaft motor only)

Bolted Coupling as shown in Fig. 9

(a) Bearings are provided to absorb some upward shaft thrust when the coupling is fitted.
(b) The coupling is fastened with bolts.
(c) This coupling type is not auto-release type.

Note: Standard high thrust motors can absorb momentary up-thrust load up to 30% of the standard down thrust load. If the up-thrust is long in duration (over 10 Seconds) and/or exceeds 30% of the standard high thrust rating, special design arrangements are required and standard motor is not suitable.

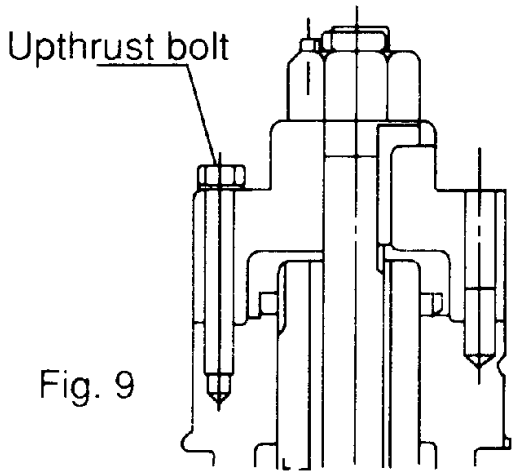

Fig. 9

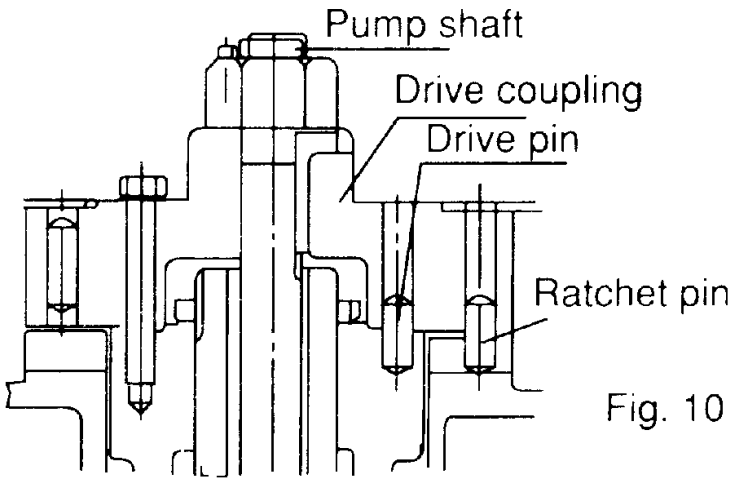

Fig. 10

3.3.7 Non-reverse ratchet/coupling, as Fig. 10 (If necessary)

The non-reverse coupling is also a bolted type and,

(a) It prevents the pump and motor from rotating in the reverse direction.
(b) It also prevents damage form over speeding and damage to pump shaft and bearings.
(c) The ratchet pins are lifted by the ratchet teeth and are held clear by centrifugal force and friction as the motor comes up to speed.
(d) When power is removed, speed decreases, and the pins fall. At the instant of reversal, a pin will catch in a ratchet tooth and prevent backward rotation.
(e) When installing the non-reverse coupling, do not use lubricant. Lubricant will interfere with proper operation. The top half of the coupling should seat solidly on the lower half and the pins should touch the bottom of the pockets between the teeth in the plate.
(f) As with the bolted coupling, the up-thrust capabilities are 30% of the standard high thrust rating for down thrust.

ATTENTION!
Do not apply non-reverse ratchets on applications in which the pump reversal time from shutdown (the instant the stop button is pressed) to zero speed is less than one second.

3.4 Installation for belt drive

In general, power transmission though direct flexible coupling is appropriate for large motors. Such motors are not suitable for belt, chain or gear connection unless specially designed for such service. However, for small and medium motors of which outputs within the ranges shown on table below, it is acceptable to use belt transmission as indicated. Beyond these ranges, do not apply belt sheaves unless specially designed.

3.4.1

The diameter ratio between conveyance sheaves should not be greater than 5 to 1 for flat belts, and 8 to 1 for V-belts. It is also advisable to limit the belt velocity to under 35m/sec (115 ft/sec) to limit belt abrasion and vibration. The smaller the outer diameter of the V-belt sheave, the greater the shaft bending stress will be. If the bending stress is in excess of the shaft fatigue stress, the shaft may break. Therefore, please inform TWMC when you have decided the size of the sheaves and the length of the belts upon ordering.

ATTENTION!
Place the sheave and belt as close as possible to the motor body (it is advisable to make x as shown in Fig. 11 equal to 0) to reduce the bending moment and improve shaft life.

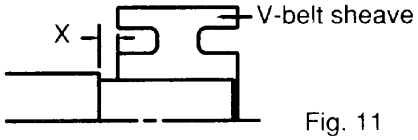

Fig. 11

3.4.2 Table of belt-sheave application for general electric motors

Output (KW/HP)			V-Belt Sheave							
			Conventional V-Belts				Narrow V-Belts			
4P	6P	8P	V-Belt Type	Number Of Belts	Min. PCD (mm)	Max Width (mm)	V-Belt Type	Number Of Belts	Min. PCD (mm)	Max Width (mm)
11/15	-	-	B	4	160	82	3V	4	125	48
-	11/15	-	B	5	170	101	3V	5	140	59
-	-	11/15	B	5	190	101	3V	6	160	69
15/20	-	-	B	5	170	101	3V	6	125	69
-	15/20	-	B	5	224	101	3V	6	160	69
-	-	15/20	C	4	224	111	5V	3	180	60
18.5/25	-	-	B	5	200	101	3V	6	140	69
-	18.5/25	-	C	4	224	111	5V	3	180	60
-	-	18.5/25	C	5	224	136	5V	4	180	78
22/30	-	-	B	5	224	101	5V	6	160	69
-	22/30	-	C	5	224	136	3V	4	180	78
-	-	22/30	C	5	250	136	5V	4	200	78
30/40	-	-	C	5	224	136	5V	4	180	78
-	30/40	-	C	5	265	136	5V	4	224	78
-	-	30/40	C	6	265	162	5V	5	224	95
37/50	-	-	C	6	224	162	5V	4	200	78
-	37/50	-	C	6	265	162	5V	4	224	78
-	-	37/50	C	7	280	187	5V	5	250	95
45/60	-	-	C	6	265	162	5V	4	224	78
-	45/60	-	C	7	280	187	5V	5	224	95
-	-	45/60	C	7	315	187	5V	6	250	113
55/75	-	-	C	7	265	187	5V	5	224	95
-	55/75	-	C	8	300	213	5V	6	250	113
-	-	55/75	D	5	355	196	5V	6	280	113
75/100	-	-	C	8	315	213	5V	6	250	113
-	75/100	-	D	6	355	233	5V	6	315	113
-	-	75/100	D	6	400	233	5V	6	355	113
-	90/120	-	D	6	400	233	5V	6	355	113
-	-	90/120	D	6	425	233	8V	4	355	124
-	110/150	-	D	7	400	270	8V	4	355	124
-	132/175	110/150	D	7	450	270	8V	4	400	124
-	160/200	132/175	D	9	450	344	8V	4	450	124

3.5 Conveyance with chain or gear

3.5.1

Make sure the loading capacity of shaft and bearings is appropriate for the size and installation position (overhung) of chain and gear. If necessary, please contact us to ensure the shaft and bearings will meet your requirements.

3.5.2
Pay close attention to ensure the parallelism of shafts.

3.5.3
The teeth of couplings should be correctly and precisely matched; the force conveyance centers should lie on the same line.

3.5.4
There should be no skip, jumping, vibration or unusual noises.

ATTENTION!
Do not hammer the conveyance devices such as couplings, belt sheaves, chain wheels, gears etc. onto the shaft. Those shaft fitments should be fitted and removed only by means of suitable devices. Heat shrinking may be a better alternative to avoid damaging bearings and components.

The exposed rotating parts should be covered to prevent accidents.

3.6 Electrical connections

All interconnecting wiring for controls and grounding should be in strict accordance with local requirements such as the USA National Electrical Code and UK IEE wiring regulations. Wiring of motor and control, overload protection and grounding should follow the instructions of connection diagrams attached to the motor.

3.6.1 Power

The rated conditions of operation for the motor are as shown on the nameplate. Within the limits, given below, of voltage and frequency variation from the nameplate values, the motor will continue to operate but with performance characteristics that may differ from those at rated conditions:

±10% of rated voltage
±5% of rated frequency
±10% combined voltage and frequency variation so long as frequency variation is no more than ±5% of rated.

Operating the motor at voltages and frequencies outside of the above limits can result in both unsatisfactory motor performance and damage to or failure of the motor.

3.6.2
The main lead box furnished with the motor has been sized to provide adequate space for the make-up of the connections between the motor lead cables and the incoming power cables.

The bolted joints between the motor lead and the power cables must be made and insulated in a workman-like manner following the best trade practices.

3.6.3
Either fabricated motors or fan cooled cast frame, motors are all provided with grounding pads or bolts.

The motor must be grounded by proper connection to the electrical system ground.

3.6.4

The rotation direction of the motor will be as shown by either a nameplate on the motor or the outline drawing. The required phase rotation of the incoming power for this motor rotation may also be stated. If either is unknown, the correct sequence can be determined in the following manner: While the motor is uncoupled from the load, start the motor and observe the direction of rotation. Allow the motor to achieve full speed before disconnecting it from the power source. Refer to the operation section of these instructions for information concerning initial start-up. If resulting rotation is incorrect, it can be reversed by interchanging any two (2) incoming cables.

3.6.5 Auxiliary devices

Auxiliary devices such as resistance temperature detectors, thermocouples, thermoguards, etc., will generally terminate on terminal blocks located in the auxiliary terminal box on the motor. Other devices may terminate in their own enclosures elsewhere on the motor. Such information can be obtained by referring to the outline drawing. Information regarding terminal designation and the connection of auxiliary devices can be obtained from auxiliary drawings or attached nameplates.

If the motor is provided with internal space heaters, the incoming voltage supplied to them must be exactly as shown by either a nameplate on the motor or the outline drawing for proper heater operation.

Caution must be exercised anytime contact is made with the incoming space heater circuit as space heater voltage is often automatically applied when the motor is shutdown.

4. OPERATION

4.1 Examination before start

4.1.1

When motors are installed in good manner, ensure the wiring is according to the diagram. Also, the following points should be noted:

(a) Make sure all wiring is correct.
(b) Ensure the sizes of cable wires are appropriate and all connections are well made for the currents they will carry.
(c) Ensure all connections are properly insulated for the voltage and temperature they will experience.
(d) Ensure the capacity of fuses, switches, magnetic switches and thermo relays etc. are appropriate and the contactors are in good condition.
(e) Make sure the frame and terminal box are grounded.
(f) Make sure that the starting method is correct.
(g) Make sure switches and starters are set at their right positions.
(h) Motor heaters must be switched off when the motor is running.

4.1.2 Measurement of insulation resistance

During and immediately after measuring, the terminals must not be touched as they may carry residual dangerous voltages. Furthermore, if power cables are connected, make sure that the power supplies are clearly disconnected and there are no moving parts.

(a) For rated voltage below 1000V, measured with a 500VDC megger.
(b) For rated voltage above 1000V, measured with a 1000VDC megger.
(c) In accordance with IEEE 43, clause 9.3, the following formula should be applied:

$$R \geq \left(\frac{\text{Rated voltage (v)}}{1000} + 1 \right) \times 10(M\Omega)$$

(d) On a new winding, where the contaminant causing low insulation resistance is generally moisture, drying the winding through the proper application of heat will normally increase the insulation resistance to an acceptable level. The following are several accepted methods for applying heat to the winding:
   (1) If the motor is equipped with space heaters, they can be energized to heat the winding.
   (2) Direct current (as from a welder) can be passed through the winding. The total current should not exceed approximately 50% of rated full load current. If the motor has only three leads, two must be connected together to form one circuit through the winding. In this case, one phase will carry the fully applied current and each of the others, one-half each. If the motor has six leads (3 mains and 3 neutrals), the three phases should be connected into one series circuit.

Ensure there is adequate guarding so live parts cannot be touched.

   (3) Heated air can either blown directly into the motor or into a temporary enclosure surrounding the motor. The source of heated air should preferably be electrical as opposed to fueled (such as kerosene) where a malfunction of the fuel burner could result in carbon entering the motor.

ATTENTION!
Caution must be exercised, when heating the motor with any source of heat other than self contained space heaters, to raise the winding temperature at a gradual rate to allow any entrapped moisture to vaporize and escape without rupturing the insulation. The entire heating cycle should extend over 15-20 hours.

Insulation resistance measurements can be made while the winding is being heated. However, they must be corrected to 40ºC for evaluation since the actual insulation resistance will decrease with increasing temperature. As an approximation for a new winding, the insulation resistance will approximately halve for each 10ºC increase in insulation temperature above the dew point temperature.

(e) Should the resistance fail to attain the specified value even after drying, careful examination should be undertaken to eliminate all other possible causes, if any.

4.1.3 Power Source

(a) Ensure the capacity of the power source is sufficient.
(b) Ensure the supply voltage and frequency ratings are identical to those on the nameplate.
(c) Voltage variation should be confined to within ±10% of the rated value and the phase to phase voltages should be balanced.

4.1.4 Bearing lubrication

(a) For sleeve bearing motors, the oil reservoir must be filled with oil to the correct level. On self-lubricated bearings, the standstill oil level will be at the center of the oil gauge. The proper oil is a rust and oxidation inhibited, turbine grade oil. Refer to the lubrication nameplate for the recommended viscosity.

(b) Motors, which are supplied with provision for flood lubrication, have an inlet orifice to meter the oil flow to the bearing. Refer to the outline drawing for these values. If the supply pressure does not match that stated on the outline, the orifice size must be adjusted to produce the specified flow rate. The drain adapter (also provided) has a weir plate fixed to the inside of the pipe to permit the establishment of the proper oil level. This weir plate must be located at the bottom of the pipe and must be parallel to the plane of the motor feet. To ensure optimum flow, the drain line should be vented to the atmosphere.

Oil inlet temperature:	Normal below 50ºC
	Alarm 60ºC
	Trip 65ºC

(c) If the motor is in storage for over three (3) months, refilling of some new oil should be undertaken before operation to prevent bearing damage due to dry friction. The oil level should be kept at the center of the oil gauge. If necessary, drain some oil after refilling.

(d) Motors that have been designed with anti-friction bearings for use with an oil mist lubrication system have been packed at the factory with a small amount of grease for short test runs. Continuous running should not be considered unless the oil mist system is installed and operating.

(e) Grease lubricant type

(1) The bearings have been well greased at the factory before delivery. However, regreasing is required if a significant period has elapsed between manufacture and use or in storage

(2) All motors with ZZ bearings will have SHELL Alvania R3 (*Lithium base grease*). All motors with open bearings will have Polyrex EM (polyurea base grease).

4.1.5 Cooling water for the cooler on water-cooled motors

Make sure the quality, volume and inlet temperature of cooling water for the motors are normal before the machine is in operation.

Water: General tower water or industrial water.	
Volume: Please see outline drawing	
Inlet temperature:	Normal below 30ºC
	Alarm 35ºC
	Trip 40ºC

ATTENTION!
Make sure all locks, which fasten the movable parts of the motors during transportation, are dismantled and the shaft can rotate freely.

ATTENTION!
Ensure there is no foreign matter or tools inside the motors before starting motors.

4.1.6
Make sure the transmission system, including belts, screws, bolts, nuts and set pins are in good condition.

The keys fitted to the shaft extensions are held by plastic tape only to prevent them from falling out during transportation or handling. The shaft key shall be removed to avoid flying out, when the motor is operated prior to the couplings etc. being fitted to the shaft extension.

4.1.7
Make sure the items above are examined. Test the motor running with or without load. Record and check according to "Maintenance" at 15-minute intervals during the first three hours of operation. Then regular examinations should take place at longer intervals. If all goes well the motor can be classified as "in good order".

4.2 Starting operation

4.2.1 Starting load
Initially run the motor unloaded prior to coupling to other machines. Unless otherwise specified, a motor usually starts with light load, which is then gradually increased, proportional to the square of the speed and at last reaches 100% load at full load speed.

4.2.2 Starting
Too frequent starts can be harmful to the motors. The following restrictions should be observed:

(a) Motor can be restarted should the initial start fail. Two starts are generally permissible when the motor is cold.
(b) Motor can be started only once when it is at normal running temperature.
(c) Should additional starts be necessary beyond the conditions stated above, the following restrictions should be noted:
    (1) Let the motor cool down for 60 minutes before restarting, fully loaded.
    (2) Let the motor cool down for 30 minutes before restarting, unloaded.
    (3) Two inching starts can be regarded as one normal start.

ATTENTION!
If the motor rotor fails to start turning within one or two seconds, shut off the power supply immediately.
Investigate thoroughly and take corrective action before attempting a restart.

Possible reasons for not starting are:
(1) Too low a voltage at the motor terminals.
(2) The load is too much for the rotor to accelerate.
(3) The load is frozen up mechanically.
(4) All electrical connections have not been made.
(5) Single-phase power has been applied.
(6) Any combination of the above.

4.2.3 Rotating direction

(a) Most TWMC motors are bi-directional. However, when some special types, such as high speed 2-Pole, certain large capacity motors, those with a non-reversing ratchet etc., should rotate in one direction, please ensure the rotation is in conformity with the directional arrow-mark shown on the attached nameplate.

(b) To reverse a bi-directional motor, cut the power and wait until the motor stops. Then interchange any two of the three phases.

4.2.4 Power source, Voltage, Current

(a) Ensure the voltage and frequency of the power source are identical to the ratings shown on the nameplate.

(b) Voltage variation should be confined to within ±10% of the rating and the three phase voltages should be in full balance

(c) Ensure the motor phase currents, when without load, are within ±5% of the average values.

4.2.5

Frequency variation should be confined to within ±5% of the rating. The aggregate variation of voltage and frequency should be confined to within ±10% of the absolute value of the ratings.

Starting time and unusual noises

ATTENTION!
Starting time is longer for the motors with large inertia. However, if starting time is longer than usual or if there is difficulty in starting, or there is abnormal noise, do not run the motor and refer to TWMC Service representative.

4.2.6 Sleeve bearing oil rings (sleeve bearing types only)

As the oil ring is used to carry lubricant to sleeve bearings, frequently check to ensure the oil ring is in motion.

4.2.7 Bearing temperature rise

Following the initial start-up, the bearing temperatures should be closely monitored. The rate of rise in bearing temperature is more indicative of impending trouble than is the actual temperature.

ATTENTION!
If the rate of rise in temperature is excessive or if the motor exhibits excessive vibration or noise, it should be shut down immediately and a thorough investigation made as to the cause before it is operated again.

If the bearing temperature rise and motor operation appear to be normal, operation should continue until the bearing temperature stabilizes.

Recommended limits on bearing temperature are as follows:

Sleeve Bearings	**Total measured temperature**
● By permanently installed detector	90ºC
● By temporary detector on top of the bearing sleeve near the oil ring	85ºC

Anti-Friction Bearings	**Total measured temperature**
● By permanently installed detector	100ºC
● By temporary detector measuring the outside of the bearing housing	95ºC

ATTENTION! (For sleeve bearing)

(1) It must be noted that when operating flood lubricated sleeve bearings without outside lubrication supplied, the bearing temperature must not be allowed to exceed 85ºC total temperature

(2) Under normal condition, for the self-lube bearing, the rate of temperature rise should be from 11 to 14ºC for the first ten (10) minutes after starting up and approximately 22ºC at thirty (30) minutes. The rate of bearing temperature rise is a function of the natural ventilation and operating conditions.

(3) When the rate of bearing temperature rise is less than 1ºC per half-hour, the bearing temperature is considered to be stabilized.

(4) If the total bearing temperature exceeds 95ºC, the motor should be shut down immediately.

Noise and Vibration

ATTENTION!
Any abnormal noise or vibration should be immediately investigated and corrected. Increased vibration can be indicative of a change in balance due to mechanical failure of a rotor part, a stator winding problem or a change in motor alignment.

5. MAINTENANCE

5.1 Major points in regular inspections and maintenance.

For safety, maintenance and repairs must only be carried out by properly trained personnel.

Some testing, such as insulation resistance, usually requires the motor to be stopped and isolated from power supplie(s).

Routine inspection and maintenance are usually performed by looking, listening, smelling and simple meters.

High temperature may arise under operating conditions on the motor surfaces, so that touching should be prevented or avoided. Keep away from moving and live parts. Unless deemed necessary, do not remove guards whilst assessing the motor.

Timely replacement of worn parts can assure longevity and prevent breakdown.

Routine inspection and regular inspection and maintenance are important in preventing breakdown and lengthening service life.

Owing to the varied time and circumstances, motors are used, it is difficult to set the items and periods for regular inspection and maintenance. However, as a guide it is recommended to be performed periodically according to factory maintenance program. Generally, the inspection scope determined by the following factors:

(a) Ambient temperature.
(b) Starting and stopping frequency.
(c) Troublesome parts usually affecting motor functions.
(d) Easily abraded parts.
(e) The important position of motor in the operational system of a factory should be duly recognized. Therefore, its health and wellbeing should be fully protected especially when it is operating in severe conditions.

5.2 Motor windings:

(a) Measurement of insulation resistance and standards to determine quality of insulation resistance, please refer to measures stated in 3.1.2 “Measurement of insulation resistance”.
(b) Inspection of coil-ends:
    (1) Grease and dust accumulated on coils may cause insulation deterioration and poor cooling effect.
    (2) Moisture must not accumulate. Keep coils warm when motor is not in use if moisture can be seen.
    (3) Discoloring. This is mainly caused by overheating.
(c) Ensure no untoward change of wedges from original position.
(d) Ensure the binding at the coil end is in its normal position.

5.3 Clean the interior of the motor:

(a) After a motor is in operation for some time, accumulation of dust, carbon powder and grease etc., on the inside is unavoidable, and may cause damage. Regular cleaning and examination is necessary to assure top performance.
(b) Points to note during cleaning:
    (1) If using compressed air or blower:
        (a) Compressed air should be free of moisture.
        (b) Maintain air pressure at 4 kg/cm², since high pressure can cause damage to coils.
    (2) Vacuum
        Vacuum cleaning can be used, both before and after other methods of cleaning, to remove loose dirt and debris. It is a very effective way to remove loose surface contamination from the winding without scattering. Vacuum cleaning tools should be non-metallic to avoid any damage to thee winding insulation
    (3) Wiping
        Surface contamination on the winding can be removed by wiping using a soft, lint-free wiping material. If the contamination is oily, the wiping material can be moistened (not dripping wet) with a safety type petroleum solvent. In hazardous locations, a solvent such as inhibited methyl chloroform may be used, but must be used sparingly and immediately removed. While this solvent is non-flammable under ordinary conditions, it is toxic and proper health and safety precautions should be followed while using it.

ATTENTION!
Solvents of nay type should never be used on windings provided with abrasion protection. Abrasion protection is a gray, rubber-like coating applied to the winding end-turns.

Adequate ventilation must always be provided in any area where solvents are being used to avoid the danger of fire, explosion or health hazards. In confined areas (such as pits) each operator should be provided with an airline respirator, a hose mask or a self-contained breathing apparatus. Operators should wear goggles, aprons and suitable gloves. Solvents and their vapors should never be exposed to open flames or sparks and should always be stored in approved safety containers.

(4) Keep core ducts completely clean. The difference in temperature rise could be around 10°C before and after cleaning

5.4 Clean the exterior of the motor:

(a) On open ventilated motors, screens and louvers over the inlet air openings should not be allowed to accumulate any build-up of dirt, lint, etc. that could restrict free air movement.

ATTENTION!
Screens and louvers should never be cleaned or disturbed while the motor is in operation because any dislodged dirt or debris can be drawn directly into the motor.

(b) If the motor is equipped with air filters, they should be replaced (disposable type) or cleaned and reconditioned (permanent type) at a frequency that is dictated by conditions. It is better to replace or recondition filters too often than not often enough.

(c) Totally enclosed air to air cooled and totally enclosed fan cooled motors require special cleaning considerations. The external fan must be cleaned thoroughly since any dirt build-up not removed can lead to unbalance and vibration. All of the tubes of the air-to-air heat exchanger should be cleaned using a suitable tube brush having synthetic fiber bristles (not wire of any type).

5.5 Maintenance of anti-friction bearings

5.5.1 Frequency of re-lubrication:

The life of grease varies greatly as a result of types of model, revolution speed, temperature, operational conditions etc. It is, therefore, impossible to be precise about replenishment intervals. However, for normal direct coupling transmission, the periods shown as Table 1 may be used as a guide.

Remarks:

(a) The periods shown in Table 1 should be halved where bearings are used for belt drive and/or in dirty or high ambient temperature or high humidity environments.

(b) Please refer to the lubrication nameplate, if attached to the motor.

(c) For bearing numbers outside the range of Table 1, please contact TWMC

(d) If the periods referred to in Table 1 for drive-end bearing and opposite drive-end are different, for the convenience of maintenance operation, please take the shorter one the required grease replenishment period of these bearings.

5.5.1 Kinds of grease:

All motors with ZZ bearings will have SHELL Alvania R3 (lithium base grease). All motors with open bearings will have Polyrex EM (polyurea base grease).
Certain T-frame models will utilize special grease and will be noted on the lubrication nameplate. Please us identical grease or its equivalents when maintaining lubrication schedule.

ATTENTION!
Do not mix different kinds of grease.
Mixing grease with different type of thickeners may destroy its composition and physical properties. Even if the thickeners are of the same type, possible differences in the additive may cause detrimental effects.

5.5.2 Grease quantity

The amount of grease per replenishment depends on the type, size and construction of the bearings. The maximum amount of one replenishment for each bearing is shown in Table 2.

5.5.3 Re-greasing

If re-lubrication is to be performed when the motor is running, stay clear of rotating parts.

It is advisable to re-grease when the motor is running to allow the new grease to be evenly distributed inside the bearing.
Before re-greasing, the inlet fitting should be thoroughly cleaned to prevent any accumulated dirt from being carried into the bearing with the new grease. The outlet of grease drainage should be opened to allow the proper venting of old grease.

Use a grease gun to pump grease through grease nipple into the bearings. After re-greasing, operate the motor for 10-30 minutes to allow any excess grease to vent out.

TABLE 1.

Bearing Number		600 RPM	720 RPM	750 RPM	900 RPM	1000 RPM	1200 RPM	1500 RPM	1800 RPM	3000 RPM	3600 RPM
62XX 63XX 72XX 73XX	6210										
	12									2000 Hrs.	
	13										
	14									1000 Hrs.	
	15										
	16									720 Hrs.	
	17							2000 Hrs.			
	18			3000 Hrs.							
	20										
	22										
	24							1500 Hrs.			
	26										
	28					2000 Hrs.		1000 Hrs.			
	30										
	32							500 Hrs.			
	34					1500 Hrs.					
	36										
	38			2000 Hrs.		1000 Hrs.					

Bearing Number		600 RPM	720 RPM	750 RPM	900 RPM	1000 RPM	1200 RPM	1500 RPM	1800 RPM
NU2XX NU3XX	NU214								
	15							2000 Hrs.	
	16								
	17								
	18			3000 Hrs.				1500 Hrs.	
	20								
	22							1000 Hrs.	
	24								
	26					2000 Hrs.			
	28							500 Hrs.	
	30								
	32								
	34			2000 Hrs.		1000 Hrs.			
	36								
	38	2000 Hrs.							
	40								
	44			1000 Hrs.					
	48	1000 Hrs.							

Bearing Number		600 RPM	720 RPM	750 RPM	900 RPM	1000 RPM	1200 RPM	1500 RPM	1800 RPM
222XX 223XX	22220							300 Hrs.	
	22								
	24			1000 Hrs.		500 Hrs.			
	26								
	28								
	30					300 Hrs.			
	32			500 Hrs.					
	34								
	36								
	38	500 Hrs.							
	40			300 Hrs.					
	44								
	48	300 Hrs.							

TABLE 2.

Bearing No.		Amount of replenishment
62XX 72XX NU2XX 2222XX	6210	30 g
	6212	40
	6213	50
	6214	50
	6215	60
	6216	60
	6217	80
	6218	80
	6220	100
	6222	120
	6224	120
	6226	140
	6228	160
	6230	180
	6232	200
	6234	250
	6236	300
	6238	350
	6240	400
	6244	450
	6248	500

Bearing No.		Amount of replenishment
63XX 73XX NU223XX 223XX	6310	40 g
	6312	60
	6313	80
	6314	80
	6315	100
	6316	100
	6317	120
	6318	120
	6320	160
	6322	220
	6324	270
	6326	300
	6328	400
	6330	450
	6332	500
	6334	600
	6336	700
	6338	800
	6340	900
	6344	900
	6348	900

*Fill new grease until it overflows and the old grease is entirely replaced.

5.5.4 Oil re-lubrication (For oil lubrication types only)

Maintain proper lubrication by checking the oil level periodically and adding oil when necessary. Because of the initial clearing action of the bearing and the expansion of the oil as it comes up to operating temperature, the oil level will be higher after the motor has been in operation for a while than it is with the motor at standstill.

Overfilling should be avoided not only because of the possibility that expansion may force the oil over the oil sleeve and on to the rotor, but also because too high an operating oil level prevents the bearing form clearing itself of excess oil. The resultant churning can cause extra loss, high temperatures, and oxidized oil. If, during operation, the oil level goes above the maximum shown on the sight gauge, drain enough oil to bring the level back within the recommended operating range. **Do not permit the operating level to fall below the minimum shown on the gauge.**

ATTENTION!
Should it ever become necessary to add excessive amount of make-up oil, investigate immediately for oil leaks.

Change the oil at regular intervals. The time between oil changes depends upon the severity of operating conditions and, hence, must be determined by the motor user. Two or three changes a year is typical, but special conditions, such as high ambient temperature, may require more frequent changes. Avoid operating the motor with oxidized oil.

Use only good grade, oxidation-corrosion-inhibited turbine oils produced by reputable oil companies.

The viscosity of the oil to be used depends upon the type and size of the bearings, its load and speed, the ambient temperature, and the amount and temperature of the cooling water (if used)). The lubrication nameplate or instructions with each motor specifies the viscosity range of oil suitable for average conditions. The usual oil viscosity range of oil suitable for average conditions. The usual oil viscosity recommendations are summarized in Table 3. Operation in ambient temperatures that are near or below freezing may require preheating the oil or the use of special oil. Whenever the motor is disassembled for general cleaning and reconditioning, the bearing housing may be washed out with a suitable cleaning solvent. Be sure that the oil-metering hole is clear, and then dry the housing thoroughly before re-assembly, and ensure all traces of cleaning solvent have been removed.

TABLE 3 Oil Viscosity**

Bearing function and location	Bearing Type	Oil Viscosity - SSU	
		@ 100°F	@ 200°F
Thrust Bearing	72XX, 73XX Angular contact ball And/or (62XX, 63XX)	150	45
	Spherical roller	300	53
	Plate (Kingsbury Type)	300	53

**Remark: When a lubrication nameplate attached to the motor, use lubrication oil it stipulates.

5.5.5 Cleaning and installation of bearings

(a) Apply the proper amount of grease to the disassembled parts of the bearing after they have been thoroughly cleaned with high quality cleaning oil. Then protect them from contamination before and during assembly.

(b) Bearing installation

ATTENTION!
Before installing the bearings, make sure that the shaft mounted parts inside the bearings are in place before installation.

Since the bearing is a high precision component, it is important to avoid ingression of dust and foreign matter, and hammering during cleaning and installation. Use extreme care and insure clean conditions during installation and assembly.

ATTENTION!
The best way for bearing installation is heat shrinking. Knocking and hammering during installation should be avoided absolutely.

The bearing should be heated in a bath of clean oil at a temperature of approximately 80°C. After warming, slide the bearings in place quickly and nimbly so that it has not shrunk before being fully in position.
Grease the bearing after the temperature returns to normal, and then reassemble the motor.

5.6 Maintenance of sleeve bearings

5.6.1 Daily inspections

(a) Ensure the volume and quality of lubrication oil are in compliance with specifications.

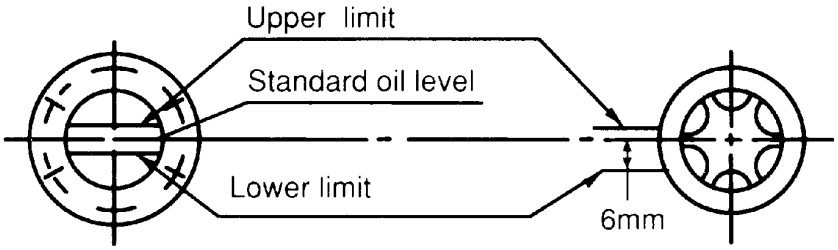

Fig. 12

(b) Ensure there is motion of the oil ring and it is not clamped.

(c) The indicator of the shaft endplay should be restricted within the specified range of the red groove of the shaft or the ±3mm (.118 in.) range of the drive-end shaft shoulder, or the bearing may be damaged.

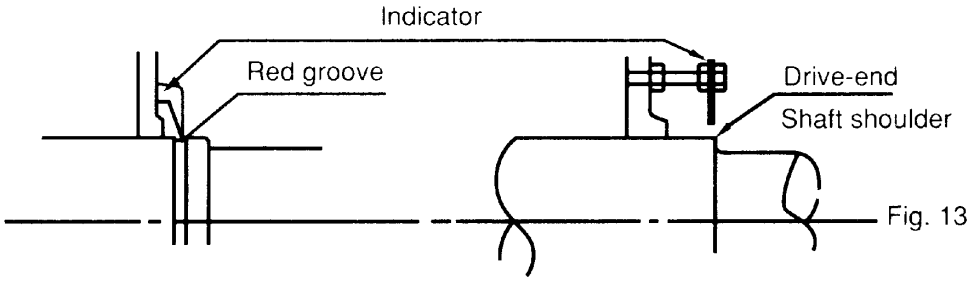

Fig. 13

5.6.2 Regular examination

(a) Periodical change of oil

The oil reservoirs of self (not flood) lubricated bearings should be drained and refilled about every six (6) months. More frequent changes may be needed on high speed (3600 rpm) motors or if severe oil discoloration or contamination occurs. In conditions where contamination does occur, it may be advisable to flush the reservoir with kerosene to remove any sediment before new oil is added. Proper care must be taken to thoroughly drain the reservoir of the flushing material before refilling with the new oil.

Refill the reservoir to the center of oil sight glass with a rust and oxidation inhibited turbine grade oil. Refer to the outline and lubrication nameplate for the correct viscosity.

(b) Quantity of lubrication oil

Please refer to the lubrication nameplate for oil quantity.

(c) Oil viscosity

(d)

ISO	Equivalents	Viscosity (SUS/100°F)
VG32	Esso Teresso 32	150
VG46	Esso Teresso 46	200
VG68	Esso Teresso 68	300

5.6.3 Disassembly

Prior to disassembling, ensure the power supplies are disconnected and there are no moving parts.

The bearing sleeve is of the spherically seated, self-aligning type. The opposite drive end bearing is normally insulated for larger motors (or when specified). On some motors, the insulation is bonded to the spherical seat of the bearing housing.

ATTENTION!
Extreme care must be exercised in removing the bearing sleeve from the insulated support to avoid damaging this insulation.

The following is the recommended procedure for removing the bearing sleeve:

(a) Remove the oil drain plug in the housing bottom and drain the oil sump.

(b) Remove all instrumentation sensors that are in contact with the bearing sleeve. These would include resistance temperature detectors, thermocouples, thermometers, etc..

(c) Remove the socket head bolts holding the bearing cap and the inner air seal. The end cover plate must also be removed if the non-drive end bearing is being disassembled. Remove the bearing cap and top half of the inner air seal. Place them on a clean, dry surface to avoid damage to the parting surfaces.

(d) Remove the top half of the bearing sleeve using suitable eyebolts in the tapped holes provided. Lift the bearing top straight up and avoid any contact with the shoulders of the shaft journals that might damage the thrust faces of the bearing. Place on a clean, dry surface taking care to prevent damage to either the parting surfaces or the locating pins that are captive n the top bearing half.

(e) Remove the screws at the partings in the oil ring and dismantle the ring by gently tapping the dowel pin ends with a soft face mallet. Remove the ring halves and immediately reassemble them to avoid any mix up l parts or damage to the surfaces at the partings.

(f) Pull up on the garter spring surrounding the floating labyrinth seal and carefully slip out the top half. Rotate the garter spring until the lock is visible. Twist counter-clockwise to disengage the lock, remove the garter spring then rotate the lower half of the seal out of the groove in the bearing housing. Note the condition of these floating labyrinth seals. If they are cracked or chipped, they must be replaced. Do not attempt to reuse a damaged seal.

(g) To remove the bottom bearing half, the shaft must be raised a slight amount to relieve pressure on the bearing. On the drive end, this can be done by jacking or lifting on the shaft extension. Protect the shaft. On the non-drive, jacing or lifting can be done using bolts threaded into the tapped holes provided in the shaft end.

(h) Roll the bottom bearing half to the top of the shaft journal and then lift it using suitable eyebolts threaded into the holes provided. Again avoid any contact with the shaft shoulders that could damage the bearing thrust faces. Place the lower bearing half on a clean, dry surface to protect the parting surfaces.

Use extreme care when rolling out the lower bearing half. Keep the hands and fingers well clear of any position where they might be caught by the bearing half if it were accidentally released and rotated back to its bottom position. Serious personal injury could result.

(i) Protect the shaft journal by wrapping it with clean, heavy paper or cardboard.

5.6.4 Re-assembly

Bearing re-assembly is basically a reverse of the disassembly procedures outlined above, with the following suggestions:

(a) The interior of the bearing housing should be cleaned and then flushed with clean oil or kerosene.

(b) The bearing halves and the shaft journal should be wiped clean using lint-free cloth soaked with clean oil.

(c) All parts should be carefully inspected for nicks, scratches, etc., in any contract surfaces. Such imperfections should be removed by an appropriate method such as stoning, scraping, filling, etc., followed by thorough cleaning.

(d) Before installing the floating labyrinth seal halves, observe their condition. Do not attempt to use a cracked or chipped seal. The bottom half seal has a set of drilled holes in its side face. These must be place at the bottom toward the inside of the bearing so that accumulating oil may drain back into the housing.

(e) Put a bead of Curil-T around the seal half O.D.'s on both sides adjacent to the garter spring groove. This will prevent oil by-passing the seal around its outside.

(f) Place the bottom seal half on top of the shaft and roll it into position. Install the top half and insert the garter spring pulling up on both ends to permit engaging the lock. Run a bead of Curil-T around the O.D's on both sides adjacent to the garter spring groove on this half also.

(g) Carefully reassemble the two oil ring halves. Inspect the dowel pins for burrs and straightness and make any corrections required. Do not force the ring halves together. Excessive force may alter the roundness or flatness of the oil ring which can change its oil delivery performance.

(h) Some of the pipe plugs in the housing are metric thread type. These are identified as those, which have a copper, lead, or similar material washer. If these plugs are removed,

be careful not to lose the washers. Before re-assembly, inspect the washers and replace them as required.

(i) Before installing the bearing cap, observe the position of the floating labyrinth seal. The "tab" must be on top to engage the pocket. Failure to position the seal properly will result in damage when the cap is assembled.

ATTENTION!
(1) Curil-T is the only approved compound for use in the assembly of the bearings on this motor. Other products may harden and impede the operation.
(2) During the re-assembly of the bearing parts, a thin layer of Curil-T should be applied to all gaskets and machined interface surfaces. This suggestion does not apply to the machined surfaces of the bearing liner halves.
(3) When seating the bearing shell, apply a thin layer of lube oil at the spherical surface of the liner. Slowly roll the lower bearing liner into the bearing housing making sure that the splinted surface of the liner and the housing are flush. Gradually lower the shaft onto the bearing. The weight of he shaft will help rotate the bearing liner so that the babbitt surface of the liner will match the slope of the journal. Sometimes it is required to use a rubber mallet to tap lightly on the bearing housing while slowly rolling the shaft to help this seating operation.

5.7 Maintenance of slip ring (For Wound Rotor Motors only)

Ensure motor is disconnected from power supplies and there are no accessible moving parts before maintenance operation.

5.7.1 Adjustment of carbon brush

(a) Brush pressure for normal operation:
- Electro-graphite brush…..0.2~0.25 kg/cm²

When frequent vibrations are evident or the brush is small (area below 0.5 cm²), the pressure should be greater than as shown.

(b) Adjustment of brush pressure:
The brush pressure should be adjusted to keep normal operation as it wears.
- The brush pressure may be reduced after use, so it is necessary to re-adjust. For adjustment, please turn adjusting screw, pressure adjusting pin or pressure adjusting plate as shown in Fig. 14 to obtain the correct tension (=0.23 x brush cross sectional area in cm²) ±10% kg.

(c) Brush pressure need not be adjusted if constant force spring is used as shown in Fig. 15 and Fig. 16.

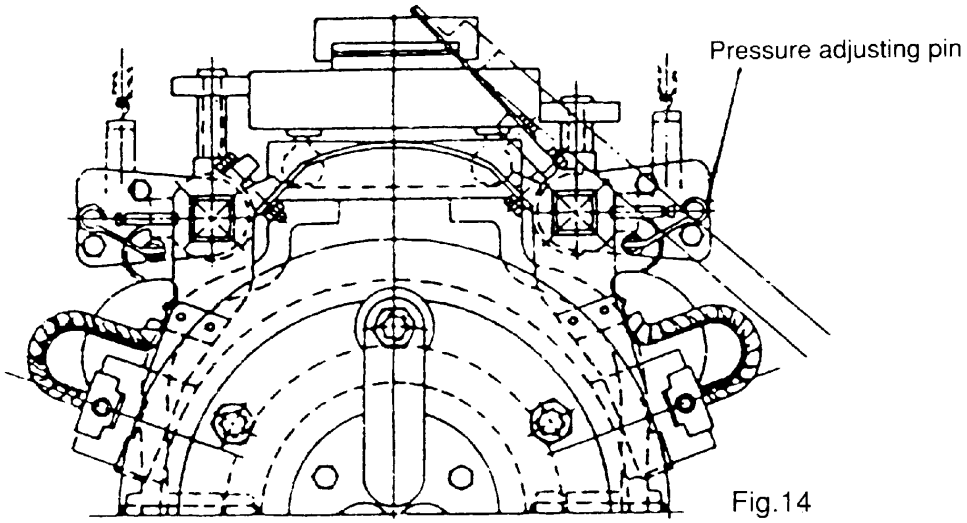

Fig.14

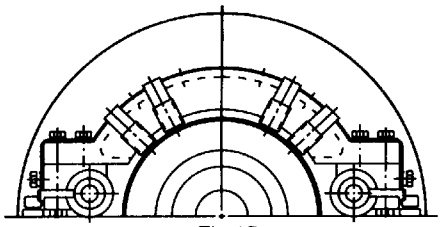
Fig.15

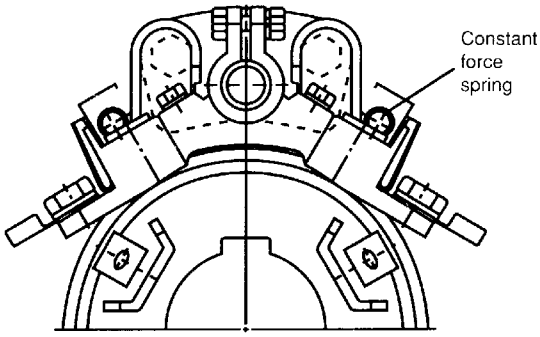

Fig.16

5.7.2 Brush replacement

The carbon brush is a part of the equipment which is easily worn away, replace it after it is worn to ½ ~ ¾ of original size.

(a) Brush material

The brush material is important to the performance of the motor. Only the most appropriate materials are chosen by TWMC, and are listed on the nameplate of the motor. It is important to know this when you replace the brush, so a recommended type is used.

(b) Dimensions

Brush, holder and gap between them, please refer to CNS 2322 C4051 or JIS C2802.

ATTENTION!
The gap between a brush and it holder is important for good performance and safety of the motor.

(c) Adjustment of new brushes (Shown in Fig. 17)

(1) Polish the new brush with a file until is assumes the appropriate contour of the slip ring which it touches.

(2) Place sand-paper (JIS R6252 No. 40…50) on the slip ring with the abrasive face of the paper against the brush to induce a closer contact by rubbing against each other.
(3) Repeat item 2 with fine sand –paper (JIS R6252 No. 100 to 200) until the contact surface between brush and slip ring exceeds 80%.
(4) Finally, clean the contaminated slip ring and brush with clean cloth or compressed air.

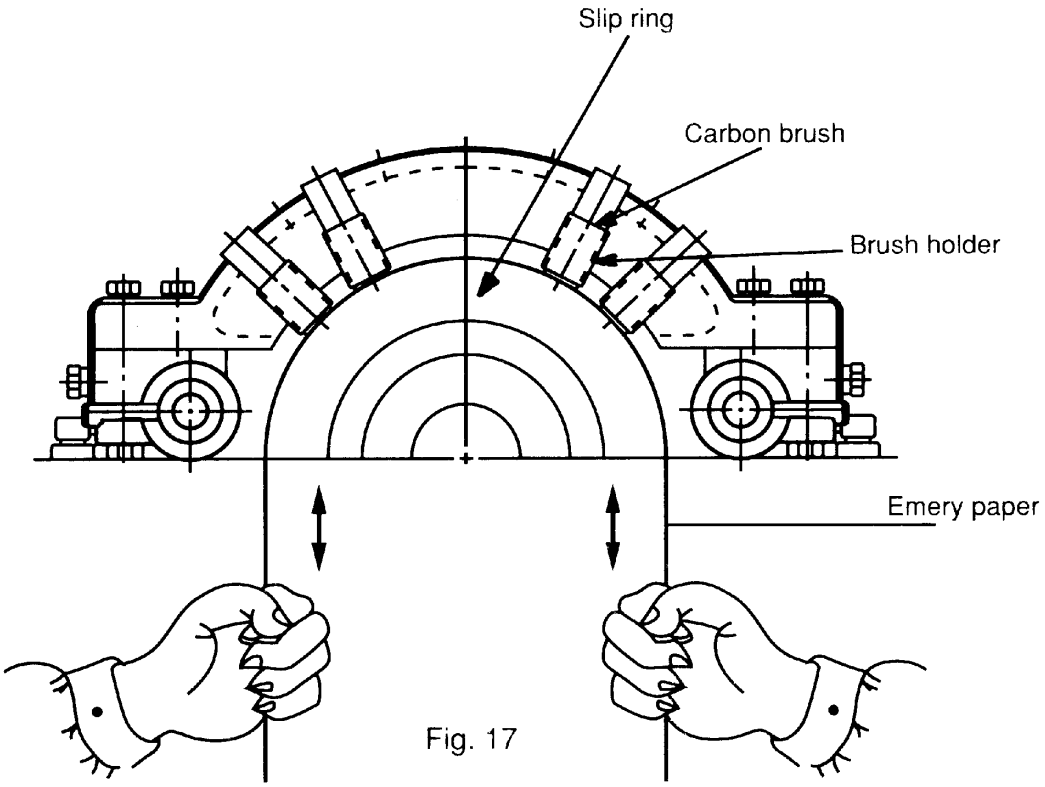

Fig. 17

5.8 Maintenance of non-reverse ratchet mechanism (For Vertical high Thrust Motor only)

5.8.1

In the pump piping system, a check valve and a stop valve should be installed in the discharge line. The check valve, placed between the pump and the stop valve, is to protect the pump from reverse flow and excessive backpressure. The stop valve is used in priming, starting and when shutting down the pump. It is advisable to close the stop valve before stopping the pump. This is especially important when the pump is operated against a high static head.

TWMC vertical high thrust motors are equipped with non-reverse ratchet (N.R.R.) mechanism only when requested by the pump manufacturer. Typical construction of the N.R.R. mechanism is shown as Fig 18 below.

The N.R.R. mechanism keeps the pump and motor from rotating in the reverse direction. Thus prevents damage from over-speeding and damage to water-lubricated pump shaft bearings

when, on shutdown, the falling water column tends to drive the pump in the reverse direction. In normal operation, the ratchet pins are lifted by the ratchet teeth and are held clear by centrifugal force and friction as the motor comes up to speed. When power is removed, the speed decreases and the pins fall. At the instant of reversal, a pin will catch in a ratchet tooth and prevent backward rotation.

5.8.2

The service life of ratchet pins depends not only on the reverse shock load between the pin and ratchet tooth when pump stopped but also the frequency of pump starting and stopping while in service. Provided that the pins are deformed due to this reverse shock load, then the up and down motion of the ratchet pins could be sluggish or jammed and that unusual noises shall arise.

The recommended replacement period for these ratchet pins is every three (3) years. If the reverse shock load is greater than 30% of motor rated torque or the starting frequency is more than twice per day, then the replacement period should be halved.

ATTENTION!
The check valve and stop valve in the discharge line should be regularly inspected and maintained to assure the normal function of these valves. This is important to protect the pump and motor from damage and increase the service life of the N.R.R. mechanism.

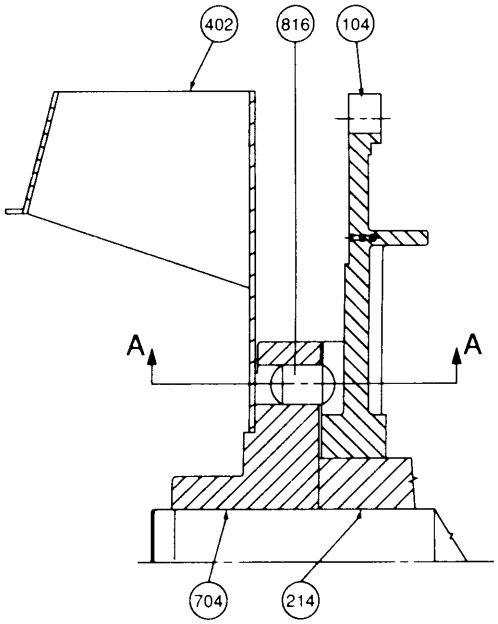

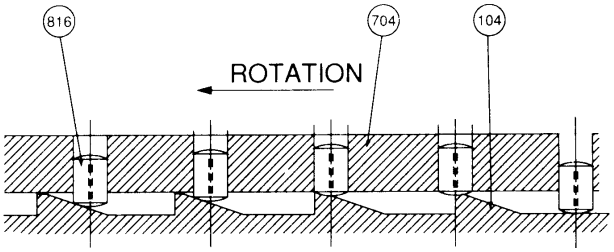

SECTION A-A

ITEM	NAME
104	RATCHET
214	BEARING SEAT
402	EXTERNAL FAN
704	RATCHET PIN CARRIER
816	RATCHET PIN

Fig. 18

6. FAULT FINDING AND RECOGNITION

Kinds of Breakdown	Symptoms	Possible Causes	Remedies
Fail to start without load	Motionless and soundless	Power-off	Consult power company
		Switch-off	Switch-on
		No fuse	Install fuse
		Broken wiring	Check wiring and repair
		Broken lead	Check wiring and repair
		Broken windings	Check windings and repair
	Fuse blowing. (Automatic switch trips off, slow start with electromagnetic noise)	Short circuit of circuit switches	Check circuit switches and replace
		Incorrect wiring	Check wiring according to nameplate
		Poor contact at terminal	Lock tightly
		Windings grounded	Factory repair
		Broken windings	Factory repair
		Poor contact of circuit switches	Check and repair
		Broken wiring	Check and repair
		Poor contact of starting switches	Check and repair
		Short circuit of starting switches	Check and repair
		Incorrect connections of starting switches	Connect according to nameplate
Loading after start	Fuse blowing. Fail to restart due to trip-off of automatic switch	Insufficient capacity of fuse	Replace fuse if wiring permits
		Overload	Lighten load
		High load at low voltage	Check circuit capacity and reduce load
	Overheating motor	Overload or intermittent overload	Lighten load
		Under-voltage	Check circuit capacity and power source
		Over-voltage	Check power source
		Ventilation duct clogged	Remove the foreign matter in the duct
		Ambient temperature exceeds 40°C	Correct insulation class to B or F, or lower ambient temperature
		Friction between rotor and stator	Factory repair
		Fuse blown (Single-phase rotating)	Install the specified fuse
		Poor contact of circuit switches	Check and repair
		Poor contact of circuit starting switches	Check and repair
		Unbalance three-phase voltage	Check circuit or consult power company

Kinds of Breakdown	Symptoms	Possible Causes	Remedies
Loading after start	Speed falls sharply	Voltage drop	Check circuit and powers source
		Sudden overload	Check machine
		Single-phase rotating	Check circuit and repair
	Switch overheat	Insufficient capacity of switch	Replace switch
		High load	Lighten load
	Bearing over-heating	High belt tension	Adjust belt tension
		Slack belt tension	Adjust belt tension
		Misalignment between motor and machine shafts	Re-align
		Over speed of bearing outer-ring	Adjust bracket
		High bearing noise	Replace the damaged bearing
Noise	Electromagnetic noise induced by electricity	Occurrence from its first operation	May be normal
		Sudden sharp noise and smoking	Short circuit of windings should be repaired at the factory
	Bearing noise	Noise of low shishi or Thru-Thru	May be normal
		Kala-Kala as a result of poor lubrication	Grease
		Kulo-Kulo as a result of poor lubrication	Clean bearing and grease
		Sa-Sa or larger noise	Replace the damaged bearing
	Mechanical noise caused by machinery	Loose belt sheave	Adjust key and lock the screw
		Loose coupling or skip	Adjust the position of couplings, lock key and screw
		Loose screw on fan cover	Lock fan cover screw tightly
		Fan rubbing	Adjust fan position
		Rubbing as a result of ingression of foreign matter	Clean motor interior and ventilation ducts
		Wind noise	Noise induced by air flowing through ventilation ducts
		Induced by conveyance machine	Repair machine
Vibration	Electromagnetic vibration	Short circuit of winding	Factory repair
		Open circuit of rotor	Factory repair
	Mechanical vibration	Unbalanced rotor	Factory repair
		Unbalanced fan	Factory repair
		Broken fan blade	Replace fan
		Unsymmetric centers between belt sheaves	Align central points
		Central points of couplings do not lie on the same level	Adjust the central points of couplings to the same level
		Improper mounting installation	Lock the mounting screws
		Motor mounting bed is not strong enough	Reinforce mounting bed

Remarks:

(1) Circuit switches: These include knife switches, electromagnetic switches, fuse and other connection switches etc.

(2) Starting switches: These include Delta-Star starters, compensate starters, reactance starters, resistor starters, starting controller's etc.

SMART Digital XL - DDA

From 60 to 200 l/h

Installation and operating instructions

Further languages

http://net.grundfos.com/qr/i/98767821

be
think
innovate

GRUNDFOS

Original installation and operating instructions

CONTENTS

		Page
1.	**General information**	**3**
1.1	Symbols used in this document	3
1.2	Qualification and training	3
1.3	Safety instructions for the operator/user	3
1.4	Safety of the system in the event of a failure in the dosing pump	4
1.5	Dosing chemicals	4
1.6	Diaphragm leakage	4
1.6.1	Diaphragm leakage detection (optional)	5
2.	**Storage and handling**	**5**
2.1	Storage	5
2.2	Unpacking	5
2.3	Transport	5
3.	**Product introduction**	**6**
3.1	Applications	6
3.2	Improper operating methods	6
3.3	Symbols on the pump	7
3.4	Nameplate	7
3.5	Type key	8
3.6	Product overview	9
4.	**Technical data / Dimensions**	**10**
4.1	Technical data	10
4.2	Technical data for CIP (Clean-In-Place) applications	12
4.2.1	Dimensions	12
5.	**Assembly and installation**	**13**
5.1	Pump assembly	13
5.1.1	Requirements	13
5.1.2	Aligning and installing the mounting plate	13
5.1.3	Installing the pump on the mounting plate	13
5.1.4	Adjusting the control cube position	14
5.2	Hydraulic connection	14
5.3	Electrical connection	16
6.	**Startup**	**18**
6.1	Preparing the pump for startup	18
6.2	Starting up the pump	18
6.3	Setting the menu language	19
6.4	Deaerating the pump	20
6.5	Calibrating the pump	20
6.5.1	Calibration process - example for DDA 60-10	21
7.	**Operation**	**22**
7.1	Control elements	22
7.2	Display and symbols	22
7.2.1	Navigation	22
7.2.2	Operating states	22
7.2.3	Sleep mode (energy-saving mode)	22
7.2.4	Overview of display symbols	23
7.3	Main menus	24
7.3.1	Operation	24
7.3.2	Info	24
7.3.3	Alarm	24
7.3.4	Setup	25
7.4	Operation modes	25
7.4.1	Manual	25
7.4.2	Pulse	26
7.4.3	Analog 0/4-20 mA	26
7.4.4	Batch (pulse-based)	27
7.4.5	Dosing timer cycle	28
7.4.6	Dosing timer week	29
7.5	Analog output	30
7.6	SlowMode	30
7.7	Stop after power failure	31
7.8	FlowControl	32
7.9	Pressure monitoring	33
7.9.1	Pressure setting ranges	33
7.9.2	Calibration of pressure sensor	33
7.10	Flow measurement	34
7.11	AutoFlowAdapt	34
7.12	Auto deaeration	34
7.13	Diaphragm leak. detect.	34
7.14	Key lock	35
7.14.1	Temporary deactivation	35
7.14.2	Deactivation	35
7.15	Display setup	35
7.15.1	Units	35
7.15.2	Additional display	35
7.16	Time+date	36
7.17	Bus communication	36
7.17.1	GENIbus communication	36
7.17.2	Possible industrial bus types	36
7.17.3	Activate communication	36
7.17.4	Setting the bus address	37
7.17.5	Characteristics of bus communication	37
7.17.6	Deactivate communication	37
7.17.7	Communication faults	37
7.18	Inputs/Outputs	38
7.18.1	Relay outputs	38
7.18.2	External stop	39
7.18.3	Empty and Low level signals	39
7.19	Basic settings	39
8.	**Service**	**40**
8.1	Regular maintenance	40
8.2	Cleaning	40
8.3	Service system	40
8.4	Perform service	41
8.4.1	Service overview	42
8.4.2	Dismantling the dosing head, diaphragm and valves	43
8.4.3	Reassembling the dosing head, diaphragm and valves	43
8.4.4	Replacing the deaeration valve	44
8.4.5	Replacing the DLD sensor	44
8.4.6	Replacing the mains cable	44

8.5	Resetting the service system	44
8.6	Diaphragm leakage	45
8.6.1	Dismantling the dosing head, diaphragm and valves in case of diaphragm leakage	45
8.6.2	Dosing liquid in the pump housing	45
8.7	Repairs	46
9.	**Faults**	**46**
9.1	List of faults	47
9.1.1	Faults with error message	47
9.1.2	General faults	50
10.	**Disposal**	**50**

Read this document before installing the product. Installation and operation must comply with local regulations and accepted codes of good practice.

1. General information

These installation and operating instructions contain general instructions that must be observed during installation, operation and maintenance of the pump. It must therefore be read by the installation engineer and the relevant qualified operator prior to installation and startup, and must be available at the installation location at all times.

1.1 Symbols used in this document

WARNING

Indicates a hazardous situation which, if not avoided, could result in death or serious personal injury.

CAUTION

Indicates a hazardous situation which, if not avoided, could result in minor or moderate personal injury.

The text accompanying the hazard symbols is structured in the following way:

SIGNAL WORD

Description of hazard
Consequence of ignoring the warning.
- Action to avoid the hazard.

A blue or grey circle with a white graphical symbol indicates that an action must be taken.

If these instructions are not observed, it may result in malfunction or damage to the equipment.

Tips and advice that make the work easier.

1.2 Qualification and training

The persons responsible for the installation, operation and service must be appropriately qualified for these tasks. Areas of responsibility, levels of authority and the supervision of the persons must be precisely defined by the operator. If necessary, the persons must be trained appropriately.

Risks of not observing the safety instructions

Non-observance of the safety instructions may have dangerous consequences for persons, the environment and the pump and may result in the loss of any claims for damages.

It may lead to the following hazards:

- Personal injury from exposure to electrical, mechanical and chemical influences.
- Damage to humans, animals and the environment from leakage of harmful substances.

1.3 Safety instructions for the operator/user

The safety instructions described in these instructions, existing national regulations on health protection, environmental protection and for accident prevention and any internal working, operating and safety regulations of the operator must be observed.

Information attached to the pump must be observed.

Leakages of dangerous substances must be disposed of in a way that is not harmful to humans, animals and the environment.

Damage caused by electrical energy must be prevented, see the regulations of the local electricity supply company.

WARNING

Electric shock
Death or serious personal injury
- Keep liquids away from the power supply and electrical components.

Before starting work on the pump, the pump must be in the "Stop" operating state or be disconnected from the power supply. The system must be pressureless.

The mains plug is the separator separating the pump from the mains.

Only original accessories and original spare parts should be used.

1.4 Safety of the system in the event of a failure in the dosing pump

The dosing pump was designed according to the latest technologies and is carefully manufactured and tested.

If it fails regardless of this, the safety of the overall system must be ensured. Use the relevant monitoring and control functions for this.

Make sure that any chemicals that are released from the pump or any damaged lines do not cause damage to system parts and buildings.

The installation of leak monitoring solutions and drip trays is recommended.

1.5 Dosing chemicals

Before switching the supply voltage back on, the dosing lines must be connected in such a way that any chemicals in the dosing head cannot spray out and put people at risk.

The dosing medium is pressurised and can be harmful to health and the environment.

When working with chemicals, the accident prevention regulations applicable at the installation site should be applied (e.g. wearing protective clothing and safety goggles).

Observe the chemical manufacturer's safety data sheets and safety instructions when handling chemicals!

A deaeration hose, which is routed into a container, e.g. a drip tray, must be connected to the deaeration valve.

1.6 Diaphragm leakage

If the diaphragm leaks or is broken, dosing liquid escapes from the drain opening on the dosing head. See fig. 4, pos. 16. Observe section *8.6 Diaphragm leakage*.

WARNING

Danger of explosion, if dosing liquid has entered the pump housing!

Death or serious personal injury

Operation with damaged diaphragms can lead to dosing liquid entering the pump housing.

- In case of diaphragm leakage, immediately separate the pump from the power supply!
- Make sure the pump cannot be put back into operation by accident!
- Dismantle the dosing head without connecting the pump to the power supply and make sure no dosing liquid has entered the pump housing. Proceed as described in section *8.6.1 Dismantling the dosing head, diaphragm and valves in case of diaphragm leakage*.

To avoid any danger resulting from diaphragm leakage, observe the following:

- Perform regular maintenance. See section *8.1 Regular maintenance*.
- Never operate the pump with blocked or soiled drain opening.
  - If the drain opening is blocked or soiled, proceed as described in section *8.6.1 Dismantling the dosing head, diaphragm and valves in case of diaphragm leakage*.
- Take suitable precautions to prevent harm to health and damage to property from escaping dosing liquid.
- Never operate the pump with damaged or loose dosing head screws.

1.6.1 Diaphragm leakage detection (optional)

Applies to DDA-AR control variant.

Pumps with diaphragm leakage detection (DLD) have a special dosing head with a special diaphragm and a pressure switch. The pressure switch is fitted and connected to the pump on delivery.

For pumps with diaphragm leakage detection the pressure differential between inlet and outlet side must be at least 2 bar / 29 psi.

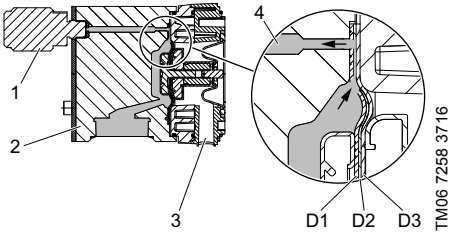

Fig. 1 Diaphragm leakage detection

Pos.	Components
1	Pressure switch
2	Dosing head
3	Drain opening
4	Dosing medium
D1	Working diaphragm
D2	Signal diaphragm (intermediate layer)
D3	Protective diaphragm

In case of a leak in the working diaphragm:

- Dosing medium (4) penetrates between working diaphragm (D1) and protective diaphragm (D3) and is transferred to the pressure switch (1) through the signal diaphragm (D2).
- On the next discharge stroke the increasing pressure activates the pressure switch (1).
- The pump indicates an alarm and stops.

The pump provides two relay outputs, which can be used to trigger an external alarm, for example.

Replace the diaphragm as soon as possible after a diaphragm leakage was detected.

Replace the pressure switch, if the diaphragm of the pressure switch is damaged.

If both the working diaphragm (D1) and the protective diaphragm (D3) are damaged, dosing liquid escapes from the drain opening (3) on the dosing head.

Immediately separate the pump from the power supply. Observe section *1.6 Diaphragm leakage*.

2. Storage and handling

2.1 Storage

- Observe the permissible ambient conditions. See section *4. Technical data / Dimensions*.
- The storage location must be protected from rain, humidity, condensation, direct sunlight and dust.
- The product must be drained completely.
- The product must be cleaned.

2.2 Unpacking

- Mount as soon as possible after unpacking.
- Observe the permissible ambient conditions. See section *4. Technical data / Dimensions*.

2.3 Transport

- The product must only be transported by trained persons.
- Wear personal protective equipment.
- Observe the permissible ambient conditions. See section *4. Technical data / Dimensions*.
- The product must be drained completely.
- The product must be cleaned.
- Use the original packaging or equivalent to protect the product during transport.
- Use appropriate lifting and transporting devices.
- Secure the product during transport to prevent it from tilting and moving.
- Avoid strong impact loads.
- If the pump is installed in a system during transport, make sure it is secured on the mounting plate with the 6 vertical safety screws. See section *5.1.3 Installing the pump on the mounting plate*.

3. Product introduction

The DDA dosing pump is a self-priming diaphragm pump. It consists of a housing with PMS (Permanent Magnet Synchronous) motor and electronics, a dosing head with double PTFE diaphragm and valves, and the control cube.

Excellent dosing features of the pump:

- Optimal intake even with degassing media, as the pump always works at full suction stroke volume.
- Continuous dosing, as the medium is sucked up with a short suction stroke, regardless of the current dosing flow, and dosed with the longest possible dosing stroke.

3.1 Applications

The pump is suitable for liquid, non-abrasive, non-flammable and non-combustible media. Observe the technical data of the product. See section *4.1 Technical data*.

Observe the freezing and boiling points of the dosing medium.

Make sure that parts in contact with the dosing medium are resistant to the dosing medium under operating conditions. See data booklet:

- http://net.grundfos.com/qr/i/99021865.

Should you have any questions regarding the material resistance and suitability of the pump for specific dosing media, please contact Grundfos.

A sunscreen is required for outdoor installation.

Areas of application

- Drinking water treatment
- Wastewater treatment
- Boiler water treatment
- Cooling water treatment
- Process water treatment
- CIP (Clean-In-Place). Observe section *4.2 Technical data for CIP (Clean-In-Place) applications*.
- Swimming pool water treatment
- Chemical industry
- Ultrafiltration process and reverse osmosis
- Food and beverage industry
- Paper and pulp industry
- Irrigation

3.2 Improper operating methods

The operational safety of the pump is only guaranteed if it is used in accordance with section *3.1 Applications*.

Other applications or the operation of pumps in ambient and operating conditions, which are not approved, are considered improper and are not permitted. Grundfos cannot be held liable for any damage resulting from incorrect use.

The pump is NOT approved for operation in potentially explosive areas, automotive applications or marine applications.

Frequent disengagement from the mains voltage, e.g. via a relay, can result in damage to the pump electronics and in the breakdown of the pump. The dosing accuracy is also reduced as a result of internal start procedures.

Do not control the pump via the mains voltage for dosing purposes!

Only use the "External stop" function to start and stop the pump!

Only use the deaeration valve for deaerating the pump. Make sure the deaeration valve is closed during normal operation.

3.3 Symbols on the pump

Symbol	Description
	Indication of universally dangerous spot.
	In case of emergency and prior to all maintenance work and repairs, take the mains plug out of the power supply!
	The device complies with electrical safety class I.

3.4 Nameplate

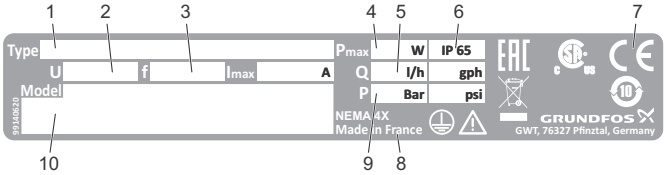

TM06 7046 3418

Fig. 2 Nameplate

Pos.	Description	Pos.	Description
1	Type designation	6	Enclosure class
2	Voltage	7	Marks of approval
3	Frequency	8	Country of origin
4	Power consumption	9	Max. operating pressure
5	Max. dosing flow	10	Model

3.5 Type key

The type key is used to identify the precise pump and is not used for configuration purposes.

Example: **DDA 60-10 FCM-PVC/V/C-F-31U3U3FG**

Type	
DDA 60-10 FCM-PVC/V/C-F-31U3U3FG	

Max. flow [l/h]	
DDA **60**-10 FCM-PVC/V/C-F-31U3U3FG	

Max. pressure [bar]	
DDA 60-**10** FCM-PVC/V/C-F-31U3U3FG	

Control variant	
DDA 60-10 **FCM**-PVC/V/C-F-31U3U3FG	
AR	Alarm relay
FCM	AR + FlowControl function

Dosing head variant	
DDA 60-10 FCM-**PVC**/V/C-F-31U3U3FG	
PVC	Polyvinyl chloride
PV	PVDF
SS	Stainless steel 1.4401
PVC-L	PVC + integrated diaphragm leakage detection
PV-L	PV + integrated diaphragm leakage detection
SS-L	SS + integrated diaphragm leakage detection

Gasket material	
DDA 60-10 FCM-PVC/**V**/C-F-31U3U3FG	
E	EPDM
V	FKM
T	PTFE

Valve ball material	
DDA 60-10 FCM-PVC/V/**C**-F-31U3U3FG	
C	Ceramics
SS	Stainless steel 1.4401

Control cube	
DDA 60-10 FCM-PVC/V/C-**F**-31U3U3FG	
F	Front mounted (change to left or right is possible)

Supply voltage	
DDA 60-10 FCM-PVC/V/C-F-**3**1U3U3FG	
3	100-240 V 50/60 Hz single phase

Valve type	
DDA 60-10 FCM-PVC/V/C-F-3**1**U3U3FG	
1	Standard
2	Spring-loaded

Connection, inlet / outlet	
DDA 60-10 FCM-PVC/V/C-F-31**U3U3**FG	
U3U3	2x Union nut G5/4
	2x Hose connector 19/20 mm
	2x Hose clamp
	2x Pipe connector 25 mm
A7A7	2x Union nut G5/4
	2x Inlay external thread 3/4 NPT
A1A1	2x Union nut G5/4 (SS)
	2x Inlay internal thread Rp3/4 (SS)
A3A3	2x Union nut G5/4 (SS)
	2x Inlay internal thread 3/4 NPT (SS)

Mains plug	
DDA 60-10 FCM-PVC/V/C-F-31U3U3**F**G	
F	EU (Schuko)
B	USA, Canada
G	UK
I	Australia, New Zealand, Taiwan
E	Switzerland
J	Japan
L	Argentina

Design	
DDA 60-10 FCM-PVC/V/C-F-31U3U3F**G**	
G	Grundfos red
A	Grundfos green
B	Grundfos black
X	Neutral / black

Special variant	
DDA 60-10 FCM-PVC/V/C-F-31U3U3FG**C3**	
	Standard
C3	Inspection certificate 3.1 (EN 10204)

3.6 Product overview

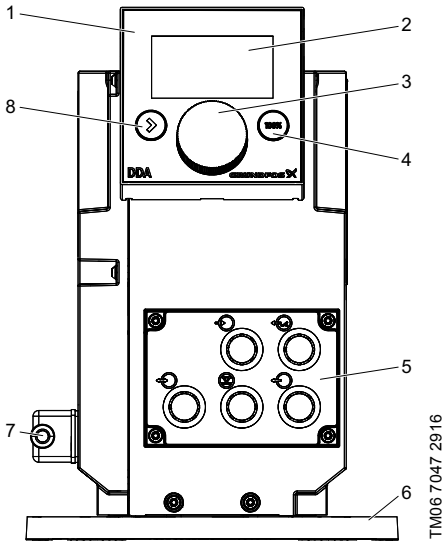

Fig. 3 Front view of the pump

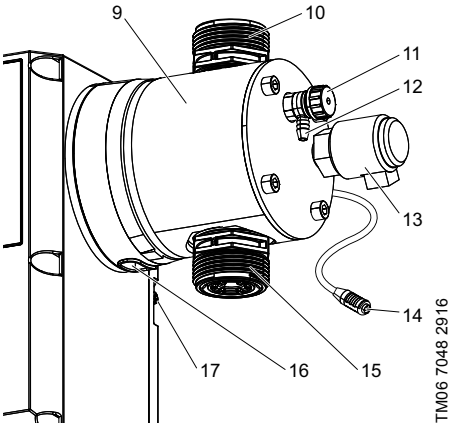

Fig. 4 Dosing head

Pos.	Description	See section
1	Control cube	
2	Graphic LC display	*7.2.2*
3	Click wheel	*7.1*
4	[100%] key	*7.1*
5	Signal inputs/outputs	*5.3*
6	Mounting plate	
7	Mains connection	
8	[Start/stop] key	*7.1*
9	Dosing head	
10	Valve, outlet side	
11	Deaeration valve	
12	Connection, deaeration hose	
13	Pressure switch of diaphragm leakage detection (optional for DDA-AR)	
14	FlowControl sensor plug (only DDA-FCM)	
15	Valve, inlet side	
16	Drain opening in case of diaphragm leakage	
17	Signal connection (FlowControl or diaphragm leakage detection)	

4. Technical data / Dimensions

4.1 Technical data

Data			60-10	120-7	200-4
Mechanical data	Turn-down ratio (setting range)	[1:X]	800	800	800
	Max. dosing capacity	[l/h]	60	120	200
		[gph]	15.8	32	52.8
	Max. dosing capacity with SlowMode 50 %	[l/h]	30	60	100
		[gph]	7.9	16	26.4
	Max. dosing capacity with SlowMode 25 %	[l/h]	15	30	50
		[gph]	3.95	8	13.2
	Min. dosing capacity	[l/h]	0.075	0.15	0.25
		[gph]	0.0197	0.04	0.066
	Max. operating pressure (backpressure)	[bar]	10	7	4
		[psi]	145	101	58
	Max. stroke frequency[1)]	[strokes/ min]	196	188	188
	Stroke volume	[ml]	5.56	11.58	19.3
	Accuracy of repeatability[5)]	[%]	1.5 SP + 0.1 FS[5)]		
	Max. suction lift during operation[2)]	[m]	3		
	Max. suction lift when priming with wet valves[2)]	[m]	1.5		
	Min. pressure difference between inlet and outlet side	[bar]	1[6)]		
		[psi]	14.5[6)]		
	Max. inlet pressure, inlet side	[bar]	2		
		[psi]	29		
	Max. viscosity in SlowMode 25 % with spring-loaded valves[3)]	[mPas] (= cP)	3000	3000	2000
	Max. viscosity in SlowMode 50 % with spring-loaded valves[3)]	[mPas] (= cP)	2000	1500	1000
	Max. viscosity without SlowMode with spring-loaded valves[3)]	[mPas] (= cP)	1000	1000	500
	Max. viscosity without spring-loaded valves[3)]	[mPas] (= cP)	100		
	Min. internal hose/pipe diameter inlet/outlet side[2), 4)]	[mm]	19		
	Min. internal hose/pipe diameter inlet/outlet side (high viscosity)[4)]	[mm]	19		
	Min. / Max. liquid temperature (PVDF, SS)	[°C]	0 / 50		
	Min. / Max. liquid temperature (PVC)	[°C]	0 / 40		
	Min. / Max. ambient temperature	[°C]	0 / 45		
	Min. / Max. storage temperature (PVDF, SS)	[°C]	-20 / 70		
	Min. / Max. storage temperature (PVC)	[°C]	-20 / 45		
	Max. relative humidity (non-condensing)	[%]	90		
	Max. altitude above sea level	[m]	2000		

Data			60-10	120-7	200-4
Electrical data	Voltage	[V]	100-240 V ± 10 %, 50/60 Hz		
	Length of mains cable	[m]	1.5		
	Max. inrush current for 2 ms (100 V)	[A]	35		
	Max. inrush current for 2 ms (240 V)	[A]	70		
	Max. power consumption P_1	[W]	62		
	Enclosure class		IP65, Nema 4X		
	Electrical safety class		I		
	Pollution degree		2		
Signal input	Max. load for level input		12 V, 5 mA		
	Max. load for pulse input		12 V, 5 mA		
	Max. load for External stop input		12 V, 5 mA		
	Min. pulse length	[ms]	5		
	Max. pulse frequency	[Hz]	100		
	Impedance at 0/4-20 mA analog input	[Ω]	15		
	Accuracy of analog input (full-scale value)	[%]	± 0.5		
	Min. resolution of analog input	[mA]	0.02		
	Max. loop resistance in external circuit	[Ω]	150		
Signal output	Max. resistive load on relay output	[A]	0.5		
	Max. voltage on relay/analog output	[V]	30 VDC / 30 VAC		
	Max. loop resistance in external circuit of the 0/4-20 mA analog output	[Ω]	500		
	Accuracy of analog output (full-scale value)	[%]	± 0.5		
	Min. resolution of analog output	[mA]	0.02		
Weight/size	Weight (PVC, PVDF)	[kg]	6.7	7.9	8.9
	Weight (stainless steel)	[kg]	7.2	8.3	9.1
	Diaphragm diameter	[mm]	74	97	117
Sound pressure	Max. sound pressure level	[dB(A)]	80		
Approvals			CE, CSA-US, NSF61, EAC, ACS, RCM		

1) The maximum stroke frequency varies depending on calibration

2) Data is based on measurements with water

3) Maximum suction lift: 1 m, dosing capacity reduced (approx. 30 %)

4) Length of inlet line: 1.5 m, length of outlet line: 10 m (at max. viscosity)

5) FS = Full-scale (maximum actual dosing flow), SP = Setpoint

6) For FCM control variant and for pumps with diaphragm leakage detection the pressure difference must be at least 2 bar / 29 psi.

4.2 Technical data for CIP (Clean-In-Place) applications

Short-term temperature limits for max. 40 minutes at max. 2 bar operating pressure:

Max. liquid temperature for dosing head material PVDF	[°C]	85
Max. liquid temperature for dosing head material stainless steel	[°C]	120

The dosing head material Polyvinyl chloride (PVC) must not be used in CIP applications.

4.2.1 Dimensions

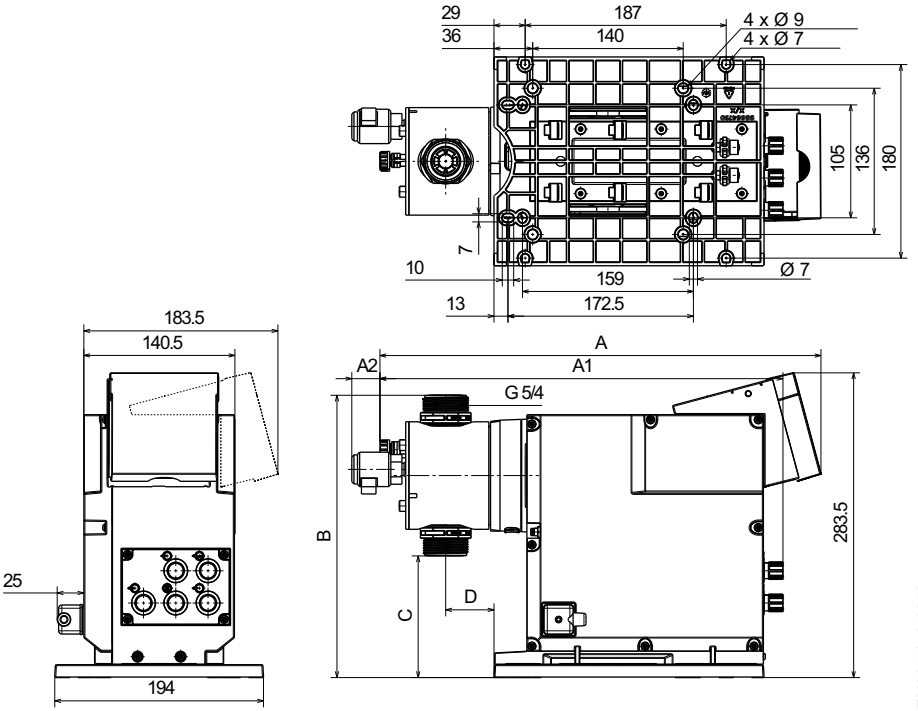

Fig. 5 Dimensional sketch

Pump type	Dosing head material	A [mm]	A1 [mm]	A2 [mm]	B [mm]	C [mm]	D [mm]
DDA 60-10	PVC/PV	410	374	26	263	112	45
DDA 60-10	SS	405	364	-	263	112	45
DDA 120-7	PVC/PV	410	374	26	276.5	97	45
DDA 120-7	SS	405	364	-	276.5	97	45
DDA 200-4	PVC/PV	410	374	26	287.5	88	45
DDA 200-4	SS	405	364	-	287.5	88	45

5. Assembly and installation

5.1 Pump assembly

Install the pump in such a way that the plug can easily be reached by the operator during operation. This will enable the operator to separate the pump from the power supply quickly in case of emergency.

5.1.1 Requirements

- The installation location must be protected from rain, humidity, condensation, direct sunlight and dust.
- The installation location must have sufficient lighting to ensure safe operation.
- Observe the permissible ambient conditions. See section *4.1 Technical data*.
- The mounting surface must be stable.
- The mounting plate must be mounted horizontally e.g. on a tank.
- Dosing must flow upwards vertically.

5.1.2 Aligning and installing the mounting plate

The mounting plate can be used as a drill template, please see fig. 5 for drill hole distances.

1. Indicate drill holes.
2. Drill holes.
3. Secure mounting plate using four screws on a bracket or a tank.

5.1.3 Installing the pump on the mounting plate

1. Remove the locking screws from their transport position on the mounting plate.
2. Place the pump on the mounting plate support clamps and slide it in as far as possible.
   – The mounting plate moves into the final position when you tighten the locking screws.
3. Carefully screw in and tighten the 2 horizontal locking screws using a torque wrench.
   – Wrench size: TORX PLUS 15 IP
   – Torque [Nm]: 1.7 (+/- 0.2)

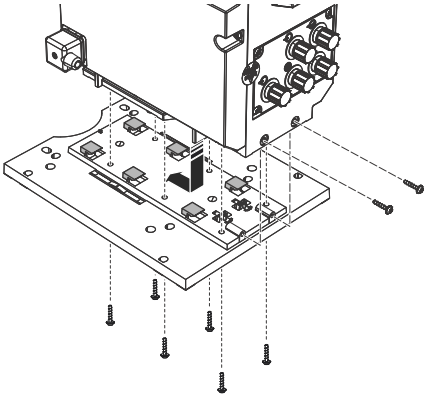

Fig. 6 Installing the pump on the mounting plate

4. For applications where the mounting surface vibrates, or if the pump is installed in a system during transport, secure the pump on the mounting plate with the 6 vertical safety screws using a torque wrench.
   – Wrench size: TORX PLUS 15 IP
   – Torque [Nm]: 1.7 (+/- 0.2)

5.1.4 Adjusting the control cube position

The control cube is fitted to the front of the pump on delivery. It can be turned by 90 ° so that the user can select to operate the pump from the right or left side.

Install the control cube correctly to ensure the enclosure class (IP65 / Nema 4X) and shock protection.

1. Switch off the power supply.
2. Carefully remove both protective caps on the control cube using a thin screwdriver.
3. Remove the screws.
   – Wrench size: TORX PLUS 15 IP
4. Carefully lift off the control cube only so far from the pump housing that no tensile stress is produced on the flat band cable.
   – Make sure no liquid enters the housing.
5. Turn the control cube by 90 ° and re-attach.
   – Make sure the O-ring is placed correctly.
6. Push down the cube and tighten the screws using a torque wrench.
   – Torque [Nm]: 1.7 (± 0.2)
7. Attach the protective caps observing the correct orientation.

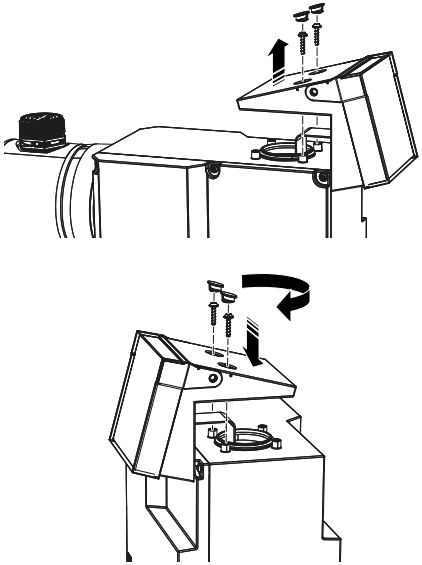

TM06 7051 2916

Fig. 7 Adjusting control cube

5.2 Hydraulic connection

WARNING

Chemical hazard

Death or serious personal injury

- Observe the material safety data sheet of the dosing medium.
- Wear protective clothing (gloves and goggles) when working on the dosing head, connections or lines.

The dosing head may contain water from the factory check. When dosing media which should not come into contact with water, another medium must be dosed beforehand.

Faultless function can only be guaranteed in conjunction with lines supplied by Grundfos.

The lines used must comply with the pressure limits as per section *4.1 Technical data*.

Important information on installation

- Observe suction lift and line diameter, see section *4.1 Technical data*.
- Shorten hoses and pipes at right angles.
- Ensure that there are no loops or kinks in the hoses.
- Keep inlet line as short as possible.
- Route inlet line up towards the inlet valve.
- Installing a strainer in the inlet line protects the entire installation against dirt and reduces the risk of leakage.
- Install a pressure-relief valve in the outlet line to provide protection against impermissibly high pressure.
- We recommend the installation of a pulsation damper downstream the pump:
  – for pipe installations.
  – for hose installations where the pump is operated with ≥ 75 % of its dosing capacity.
- Only control variant DDA-FCM and DDA with DLD:
  For discharge quantities < 1 l/h we recommend the use of an additional spring-loaded valve (approx. 2 bar) on the outlet side for the safe generation of the necessary differential pressure.

Pressure differential between inlet and outlet side must be at least 1 bar / 14.5 psi.

For control variant FCM and for pumps with diaphragm leakage detection the pressure differential between inlet and outlet side must be at least 2 bar / 29 psi.

Hose connection, type U3U3

For details on connection types, see section *3.5 Type key*.

1. Make sure the system is pressureless.
2. Push union nut (2) and hose clamp (3) across hose (4).
3. Push hose (4) completely onto hose connector (1) and tighten hose clamp (3).
4. Install hose connector (1) with union nut (2) at inlet and outlet valve.
   – Make sure the gasket at the valve is placed correctly.
   – Tighten union nuts manually. Do not use tools.
   – If using PTFE gaskets, retighten union nuts after 2-5 operating hours.
5. Attach a deaeration hose to the corresponding connection (see fig. 4, pos. 12) and run it into a suitable container or collecting tray.

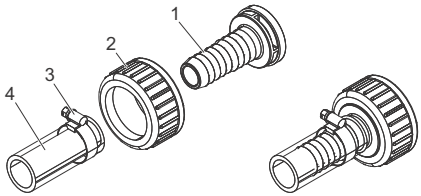

Fig. 8 Hydraulic connection

Pipe connection, type U3U3

For details on connection types, see section *3.5 Type key*.

1. Make sure the system is pressureless.
2. Push union nut (2) across pipe (3).
3. For PVC pipe:
   Glue inlay (1) to end of pipe (3) according to pipe manufacturer's specification.
4. For PVDF pipe:
   Weld inlay (1) to end of pipe (3) according to pipe manufacturer's specification.
5. Install pipe with union nut (2) at inlet and outlet valve.
   – Make sure the gasket at the valve is placed correctly.
   – Tighten union nuts manually. Do not use tools.
   – If using PTFE gaskets, retighten union nuts after 2-5 operating hours.
6. Attach a deaeration hose to the corresponding connection (see fig. 4, pos. 12) and run it into a suitable container or collecting tray.

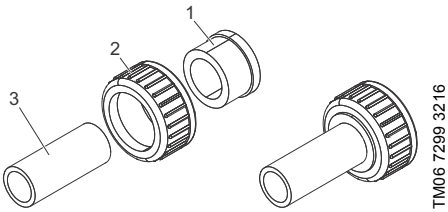

Fig. 9 Hydraulic connection

Pipe connection, types A1A1, A3A3, A7A7

For details on connection types, see section *3.5 Type key*.

1. Make sure the system is pressureless.
2. Push union nut (2) across pipe (3).
3. Apply appropriate sealing material to thread of inlay (1).
4. Screw inlay (1) to end of pipe (3).
5. Install pipe with union nut (2) at inlet and outlet valve.
   - Make sure the gasket at the valve is placed correctly.
   - Tighten union nuts manually. Do not use tools.
   - If using PTFE gaskets, retighten union nuts after 2-5 operating hours.
6. Attach a deaeration hose to the corresponding connection (see fig. 4, pos. 12) and run it into a suitable container or collecting tray.

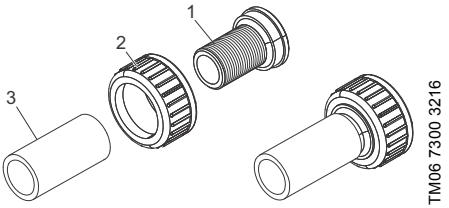

Fig. 10 Hydraulic connection, type A7A7

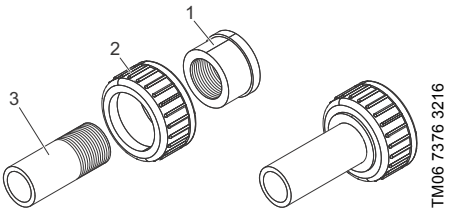

Fig. 11 Hydraulic connection, type A1A1, A3A3

5.3 Electrical connection

The mains plug is the separator separating the pump from the mains.

All electrical connections must be carried out by a qualified electrician in accordance with local regulations.

The pump can start automatically when the power supply is switched on.

CAUTION

Automatic startup

Minor or moderate personal injury

- Make sure the pump has been correctly installed and is ready to be started before you switch on the power supply.

The enclosure class (IP65 / Nema 4X) is only guaranteed if plugs or protective caps are correctly installed.

Do not manipulate mains plug or cable.

The rated voltage of the pump must conform to local conditions. See section *3.4 Nameplate*.

Signal connections

WARNING

Electric shock

Death or serious personal injury

- Electric circuits of external devices connected to the pump inputs must be separated from dangerous voltage by means of double or reinforced insulation!

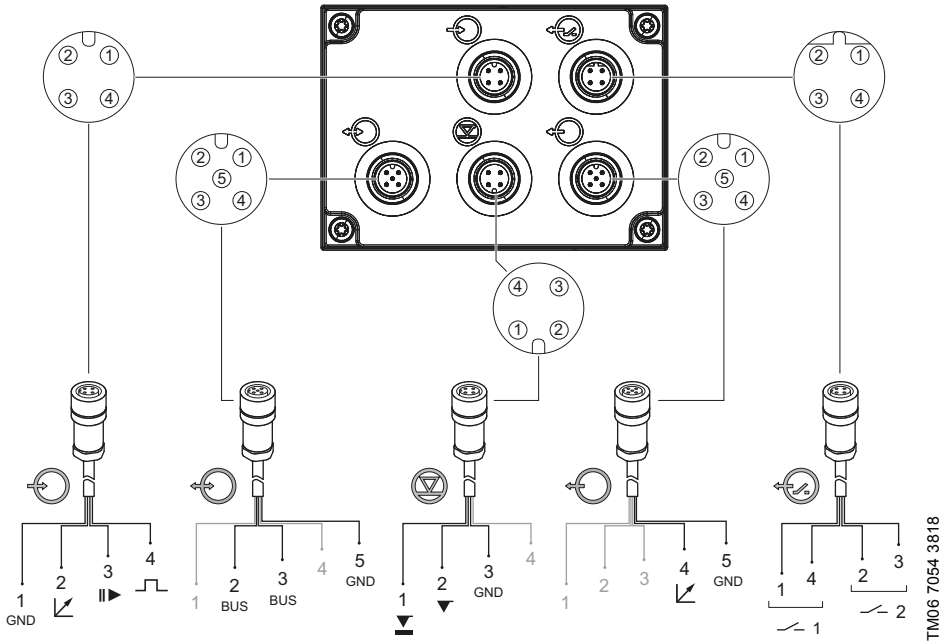

Fig. 12 Wiring diagram of the electrical connections

Symbol	Function	Pin assignment				
		1/brown	2/white	3/blue	4/black	
	Analog	GND/(-) mA	(+) mA			
	External stop	GND		X		
	Pulse	GND			X	
		1	2	3	4	
	Low-level signal	X		GND		
	Empty signal		X	GND		
		1/brown	2/white	3/blue	4/black	5/yellow/green
	Analog output				(+) mA	GND/(-) mA
		1	2/brown	3/blue	4	5/black
	GENIbus		RS-485 A	RS-485 B		GND
		1/brown	2/white	3/blue	4/black	
	Relay 1	X			X	
	Relay 2		X	X		

FlowControl signal connection (DDA-FCM)

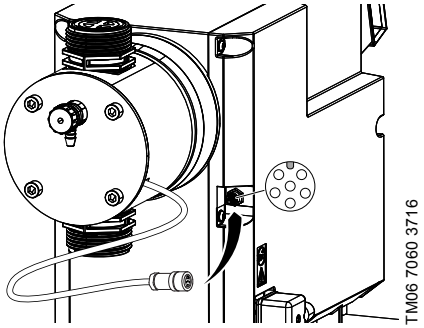

Fig. 13 FlowControl signal connection

DLD signal connection (optional for DDA-AR)

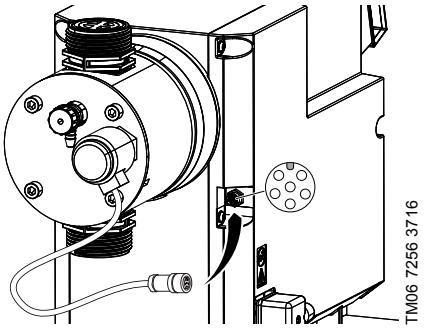

Fig. 14 DLD signal connection

6. Startup

6.1 Preparing the pump for startup

CAUTION

Chemical hazard

Minor or moderate personal injury

- Observe the material safety data sheet of the dosing medium.
- Wear protective clothing (gloves and goggles) when working on the dosing head, connections or lines.
- Collect and dispose of all chemicals in a way that is not harmful to humans, animals and the environment.

The pump can start automatically when the power supply is switched on.

CAUTION

Automatic startup

Minor or moderate personal injury

- Make sure the pump has been correctly installed and is ready to be started before you switch on the power supply.

Tighten the dosing head screws with a torque wrench before startup and every time the dosing head has been opened. After 48 operating hours, retighten the dosing head screws using a torque wrench. Torque [Nm]: 6 (+ 1).

- Make sure the pump has been connected electrically by a qualified person.
- Make sure the power supply specified on the nameplate matches the local conditions.
- Check that all pipe or hose connections have been tightened properly and tighten them, if necessary. See section *5.2 Hydraulic connection*.

6.2 Starting up the pump

1. Read section *6.1 Preparing the pump for startup*.
2. Switch on the power supply.
3. Proceed according to sections:
   – *6.3 Setting the menu language*
   – *6.4 Deaerating the pump*
   – *6.5 Calibrating the pump*.

6.3 Setting the menu language

For description of control elements, see section 7.

1. Turn click wheel to highlight the cog symbol.

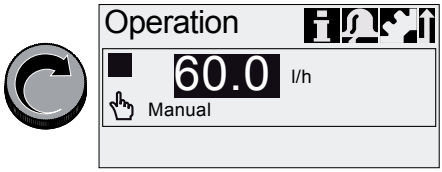

2. Press the click wheel to open the "Setup" menu.

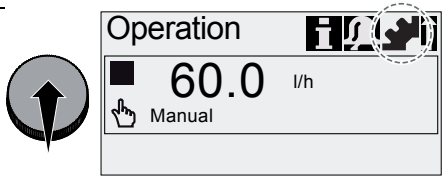

3. Turn the click wheel to highlight the "Language" menu.

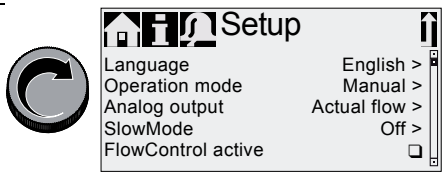

4. Press the click wheel to open the "Language" menu.

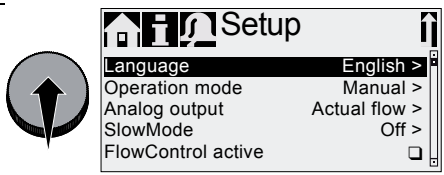

5. Turn the click wheel to highlight the desired language.

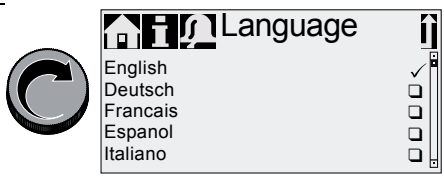

6. Press the click wheel to select the highlighted language.

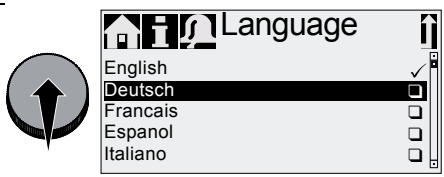

7. Press the click wheel again to confirm the "Confirm settings?" prompt and apply the setting.

TM06 7061 2916

Fig. 15 Set menu language

6.4 Deaerating the pump

1. Read section *6.1 Preparing the pump for startup*.
2. Open the deaeration valve by approximately half a turn.

WARNING

Pressurised dosing medium

Death or serious personal injury

- Do not open the deaeration valve by more than one full turn.

3. Press the [100%] key and hold it down until liquid flows out of the deaeration hose continuously and without any bubbles.
4. Close the deaeration valve.

Press the [100%] key and simultaneously turn the click wheel clockwise to increase the duration of the process to up to 300 seconds. After setting the seconds, do not press the key any longer.

6.5 Calibrating the pump

The pump is calibrated in the factory for media with a viscosity similar to water at maximum pump backpressure. See section *4.1 Technical data*.

If the pump is operated with a backpressure that deviates or if dosing a medium whose viscosity deviates, the pump must be calibrated.

For pumps with FCM control variant, it is not necessary to calibrate the pump if there is deviating or fluctuating backpressure as long as the "AutoFlowAdapt" function has been enabled. See section *7.11 AutoFlowAdapt*.

During calibration the pump performs 100 strokes/minute as a standard. If the SlowMode function is activated, the number of strokes/minute is 60 at 50 % and 30 at 25 %.

Requirements

- The hydraulics and electrics of the pump are connected. See section *5. Assembly and installation*.
- The pump is integrated into the dosing process under operating conditions.
- The dosing head and inlet line are filled with dosing medium.
- The pump has been deaerated.

6.5.1 Calibration process - example for DDA 60-10

1. Fill a measuring beaker with dosing medium. Recommended filling volumes V_1:
   – DDA 60-10: 2.5 l
   – DDA 120-7: 5 l
   – DDA 200-4: 8 l

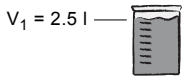

2. Read off and note down the fill volume V_1 (e.g. 2.5 l).
3. Place the inlet line in the measuring beaker.

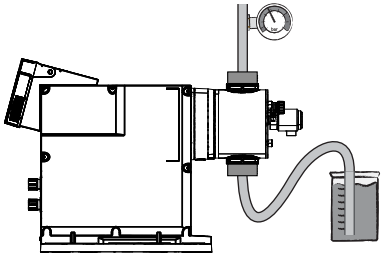

4. Start the calibration process in the "Setup > Calibration" menu.

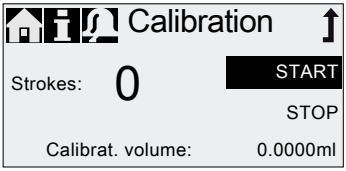

5. The pump executes 200 dosing strokes and displays the factory calibration value (e.g. 1.05 l).

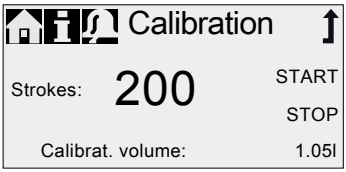

6. Remove the inlet line from the measuring beaker and check the remaining volume V_2 (e.g. 1.39 l).

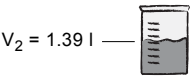

7. From V_1 and V_2, calculate the actual dosed volume $V_d = V_1 - V_2$ (e.g. 2.5 l - 1.39 l = 1.11 l).

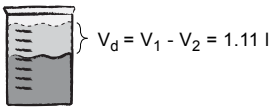

8. Set and apply V_d in the calibration menu.

• The pump is calibrated.

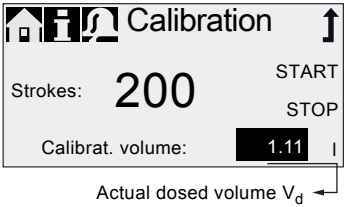

TM06 7062 2916

7. Operation

7.1 Control elements

The pump control panel includes a display and the following control elements.

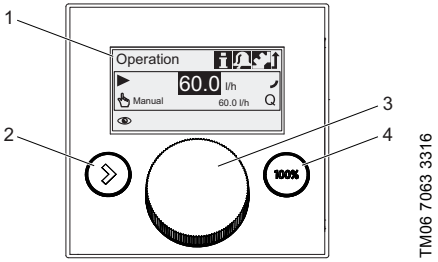

Fig. 16 Control panel

Pos.	Description
1	Graphical LC display
2	[Start/stop] key: Starting and stopping the pump.
3	Click wheel: The click wheel is used to navigate through the menus, select settings and confirm them. Turning the click wheel clockwise moves the cursor clockwise in increments in the display. Turning the click wheel counter-clockwise moves the cursor counter-clockwise.
4	[100%] key: The pump doses at maximum flow regardless of the operation mode.

7.2 Display and symbols

7.2.1 Navigation

In the "Info", "Alarm" and "Setup" main menus, the options and submenus are displayed in the rows below. Use the "Back" symbol to return to the higher menu level. The scroll bar at the right edge of the display indicates that there are further menu items which are not shown.

The active symbol (current cursor position) flashes. Press the click wheel to confirm your selection and open the next menu level. The active main menu is displayed as text, the other main menus are displayed as symbols. The position of the cursor is highlighted in black in the submenus.

When you position the cursor on a value and press the click wheel, a value is selected. Turning the click wheel clockwise increases the value, turning the click wheel counter-clockwise reduces the value. When you now press the click wheel, the cursor will be released again.

7.2.2 Operating states

The operating state of the pump is indicated by a symbol and display colour.

Display	Fault	Operating state		
White	-	Stop ■	Standby ❚❚	
Green	-			Running ▶
Yellow	Warning	Stop ■	Standby ❚❚	Running ▶
Red	Alarm*	Stop ■	Standby ❚❚	

* For some alarms the pump tries to restart periodically. Observe section *9. Faults*.

7.2.3 Sleep mode (energy-saving mode)

If in the "Operation" main menu the pump is not operated for 30 seconds, the header disappears. After two minutes, the display brightness is reduced.

If in any other menu the pump is not operated for two minutes, the display switches back to the "Operation" main menu and the display brightness is reduced. This state will be cancelled when the pump is operated or a fault occurs.

7.2.4 Overview of display symbols

The following display symbols may appear in the menus.

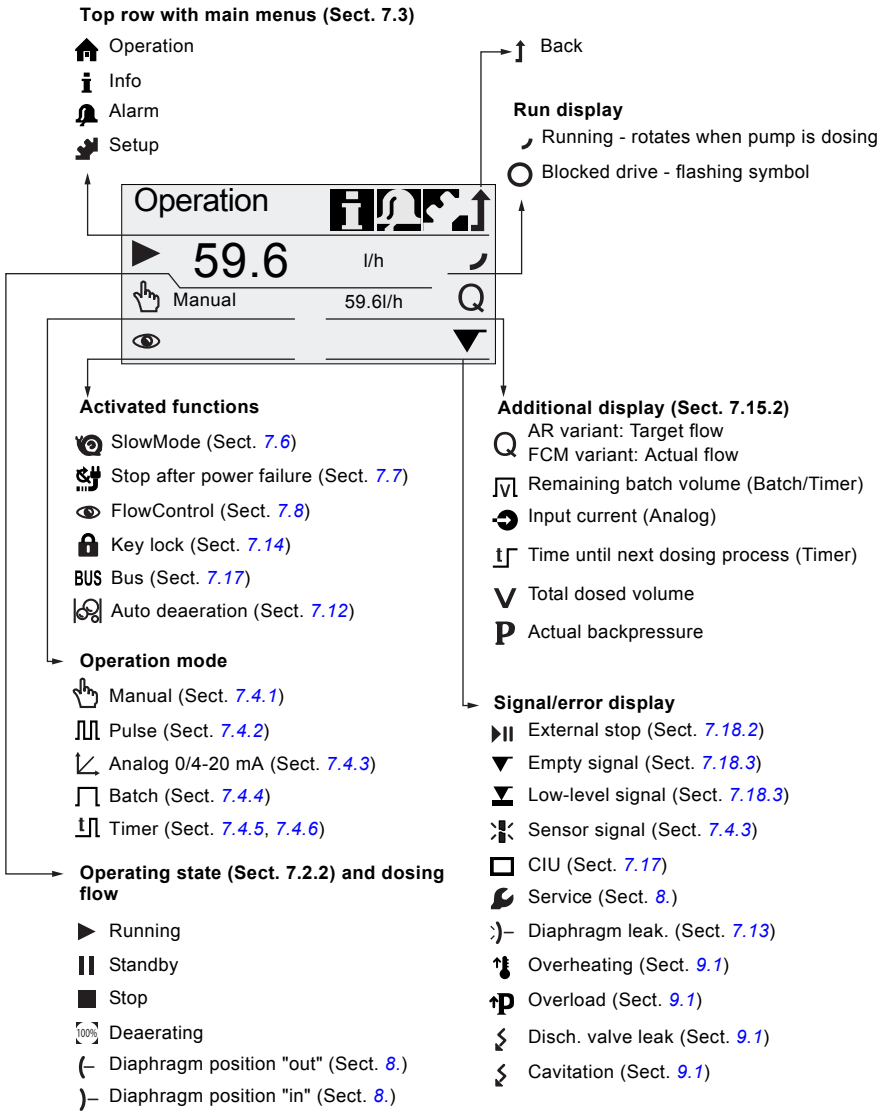

Fig. 17 Overview of display symbols

TM06 7067 3818

7.3 Main menus

The main menus are displayed as symbols at the top of the display. The currently active main menu is displayed as text.

7.3.1 Operation

Status information such as the dosing flow, selected operation mode and operating state is displayed in the "Operation" main menu.

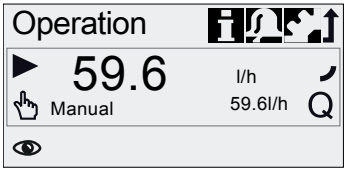

TM06 7069 2916

7.3.2 Info

You can find the date, time and information about the active dosing process, various counters, product data and the service system status in the "Info" main menu. The information can be accessed during operation.

The service system can also be reset from here.

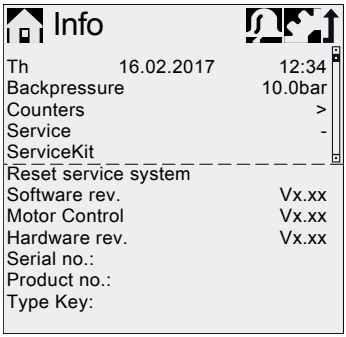

TM06 7071 2916

Counters

The "Info > Counters" menu contains the following counters:

Counters	Resettable
Volume Total dosed volume [l] or US gallons	Yes
Operating hours Accumulated operating hours (pump switched on) [h]	No
Motor runtime Accumulated motor runtime [h]	No
Strokes Accumulated number of dosing strokes	No
Power on/off Accumulated frequency of switching mains voltage on	No

7.3.3 Alarm

You can view alarms and warnings in the "Alarm" main menu.

Some alarms are automatically acknowledged by opening the "Alarm" main menu, which can cause the pump to start.

CAUTION

Automatic startup

Minor or moderate personal injury

- Before entering the "Alarm" main menu, make sure the pump is in operating state "Stop".

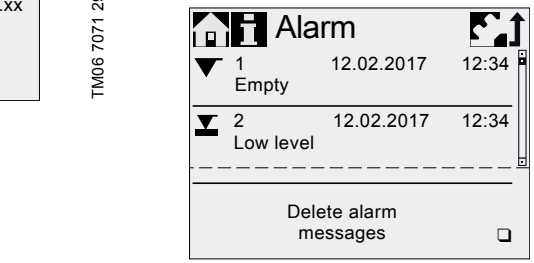

TM06 7072 2916

Up to 10 warnings and alarms, together with their date, time and cause, are listed in chronological order. If the list is full, the oldest entry will be overwritten, see section *9. Faults*.

7.3.4 Setup

The "Setup" main menu contains menus for pump configuration. These menus are described in the following sections.

Check all pump settings after any change in the "Setup" menu.

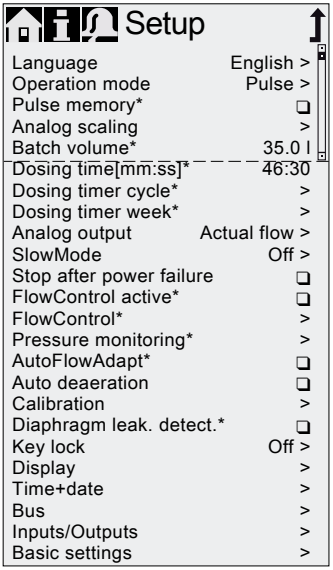

TM06 7075 3418

* These submenus are only displayed for specific default settings and control variants. The contents of the "Setup" menu also vary depending on the operation mode.

7.4 Operation modes

Six different operation modes can be set in the "Setup > Operation mode" menu.

- Manual, see section *7.4.1*
- Pulse, see section *7.4.2*
- Analog 0-20mA, see section *7.4.3*
  Analog 4-20mA, see section *7.4.3*
- Batch (pulse-based), see section *7.4.4*
- Dosing timer cycle, see section *7.4.5*
- Dosing timer week, see section *7.4.6*

7.4.1 Manual

In this operation mode, the pump constantly doses the dosing flow set with the click wheel. The dosing flow is set in l/h or ml/h in the "Operation" menu. The pump automatically switches between the units. Alternatively, the display can be reset to US units (gph). See section *7.15 Display setup*.

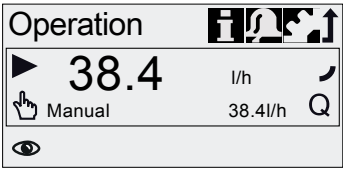

TM06 7077 2916

Fig. 18 Manual mode

The setting range depends on the pump type:

Type	Setting range*	
	[l/h]	[gph]
DDA 60-10	0.075 - 60	0.0197 - 15.8
DDA 120-7	0.15 - 120	0.04 - 32
DDA 200-4	0.25 - 200	0.066 - 52.8

* When the "SlowMode" function is active, the maximum dosing flow is reduced, see section *4.1 Technical data*.

7.4.2 Pulse

In this operation mode, the pump doses the set dosing volume for each incoming (potential-free) pulse, e.g. from a water meter. The pump automatically calculates the optimum stroke frequency for dosing the set volume per pulse.

The calculation is based on:

- the frequency of external pulses
- the set dosing volume/pulse.

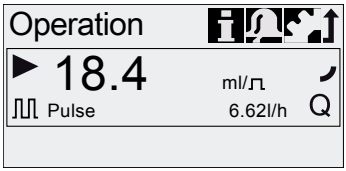

TM06 7078 2916

Fig. 19 Pulse mode

The dosing volume per pulse is set in ml/pulse in the "Operation" menu using the click wheel. The setting range for the dosing volume depends on the pump type:

Type	Setting range [ml/pulse]
DDA 60-10	0.0111 - 111
DDA 120-7	0.0232 - 232
DDA 200-4	0.0386 - 386

The frequency of incoming pulses is multiplied by the set dosing volume. If the pump receives more pulses than it can process at the maximum dosing flow, it runs at the maximum stroke frequency in continuous operation. Excess pulses will be ignored if the memory function is not enabled.

Memory function

When the "Setup > Pulse memory" function is enabled, up to 65,000 unprocessed pulses can be saved for subsequent processing.

Subsequent processing of saved pulses can cause local increase in concentration!

The contents of the memory will be deleted by:

- Switching off the power supply
- Changing the operation mode
- Interruption (e.g. alarm, External stop).

7.4.3 Analog 0/4-20 mA

In this operation mode, the pump doses according to the external analog signal. The dosing volume is proportional to the signal input value in mA.

Operation mode	Input value [mA]	Dosing flow [%]
4-20 mA	≤ 4.1	0
	≥ 19.8	100
0-20 mA	≤ 0.1	0
	≥ 19.8	100

If the input value exceeds 22 mA, an alarm is displayed and the pump stops dosing. If the input value in operation mode 4-20 mA falls below 2 mA, an alarm is displayed and the pump stops dosing. The "Sensor signal" alarm symbol is displayed in the "Signal and error display" area of the display.

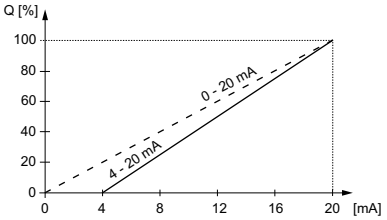

TM06 7079 2916

Fig. 20 Analog scaling

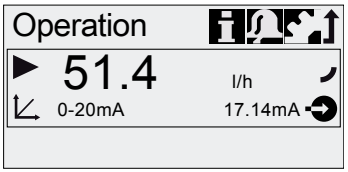

TM06 7080 2916

Fig. 21 Analog operation mode

Set analog scaling

Analog scaling refers to the assignment of the current input value to the dosing flow.

Changes of analog scaling affect also the analog output signal. See section *7.5 Analog output*.

Analog scaling passes through the two reference points (I_1/Q_1) and (I_2/Q_2), which are set in the "Setup > Analog scaling" menu. The dosing flow is controlled according to this setting.

Example 1 (DDA 60-10)

Analog scaling with positive gradient:

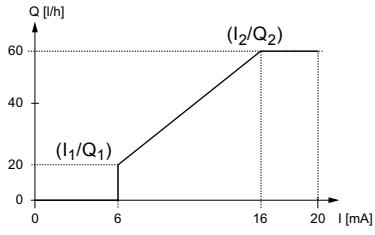

Fig. 22 Analog scaling with pos. gradient

In example 1, the reference points I_1 = 6 mA, Q_1 = 20 l/h and I_2 = 16 mA, Q_2 = 60 l/h have been set.

From 0 to 6 mA analog scaling is described by a line that passes through Q = 0 l/h, between 6 mA and 16 mA it rises proportionally from 20 l/h to 60 l/h and from 16 mA onwards it passes through Q = 60 l/h.

Example 2 (DDA 60-10)

Analog scaling with negative gradient (Operation mode 0-20 mA):

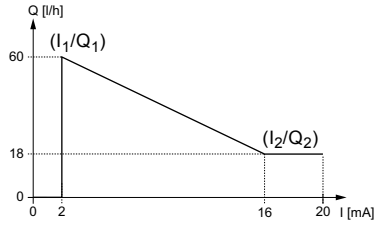

Fig. 23 Analog scaling with neg. gradient

In example 2, the reference points I_1 = 2 mA, Q_1 = 60 l/h and I_2 = 16 mA, Q_2 = 18 l/h have been set.

From 0 to 2 mA analog scaling is described by a line that passes through Q = 0 l/h, between 2 mA and 16 mA it drops proportionally from 60 l/h to 18 l/h and from 16 mA onwards it passes through Q_2 = 18 l/h.

Set analog scaling in the "Operation" menu

Analog scaling can also be modified after a security prompt directly in the "Operation" menu. This is how the dosing flow is directly modified for the current flow input value. Please observe that changes also have a direct effect on point I_2/Q_2 (see fig. 24).

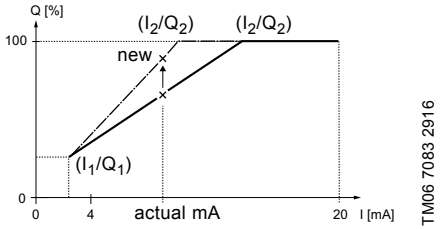

Fig. 24 Set analog scaling ("Operation" menu)

7.4.4 Batch (pulse-based)

In this operation mode, the pump doses the set batch volume in the set dosing time (t_1). A batch is dosed with each incoming pulse.

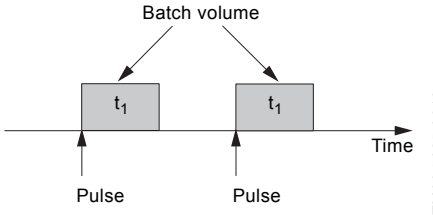

Fig. 25 Batch (pulse-based)

The setting range depends on the pump type:

Type	Setting range per batch		
	from [ml]	to [l]	Resolution* [ml]
DDA 60-10	5.56	999	0.694
DDA 120-7	11.6	999	1.45
DDA 200-4	19.3	999	2.41

* Thanks to the digital motor control, dosing quantities with a resolution of up to 1/8 of the dosing stroke volume can be dosed.

The batch volume (e.g. 75.0 l) is set in the "Setup > Batch volume" menu. The minimum dosing time required for this (e.g. 1 hour, 16 minutes) is displayed and can be increased.

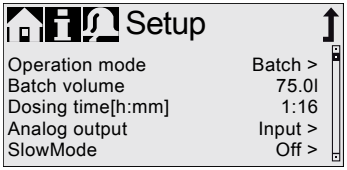

Fig. 26 Batch mode

Signals received during a batch process or an interruption (e.g. alarm, External stop) will be ignored. If the pump is restarted following an interruption, the next batch volume is dosed on the next incoming pulse.

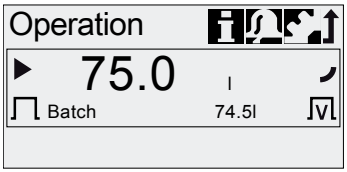

Fig. 27 Batch mode

In the "Operation" menu, the total batch volume (e.g. 75.0 l) and the remaining batch volume still to be dosed (e.g. 74.5 l) are shown in the display.

7.4.5 Dosing timer cycle

In this operation mode, the pump doses the set batch volume in regular cycles. Dosing starts when the pump is started after a singular start delay. The setting range for the batch volume corresponds to the values in section *7.4.4 Batch (pulse-based)*.

When time or date is changed in "Time+date" menu, timer dosing and timer relay output functions (Relay 2) are stopped!

Timer dosing and timer relay output functions must be restarted manually!

Changing time or date can cause increase or decrease in concentration!

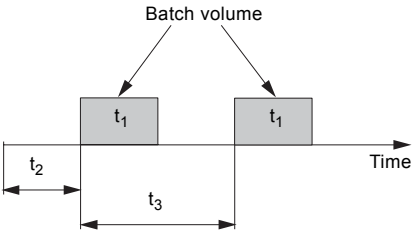

Fig. 28 Dosing timer cycle diagram

t_1	Dosing time
t_2	Start delay
t_3	Cycle time

In the event of an interruption (e.g. interruption of the mains voltage, External stop), the dosing will be stopped while the time continues running. After suspending the interruption, the pump will continue to dose according to the actual timeline position.

The following settings are required in the "Setup > Dosing timer cycle" menu:

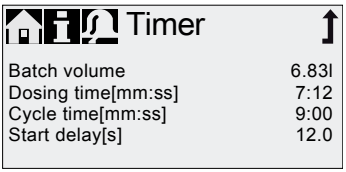

Fig. 29 Dosing timer cycle

The batch volume to be dosed (e.g. 6.83 l) is set in the "Setup > Dosing timer cycle" menu. The dosing time required for this (e.g. 7:12) is displayed and can be changed.

The total batch volume (e.g. 6.83 l) and the remaining batch volume still to be dosed are displayed in the "Operation" menu. During breaks in dosing, the time until the next dosing process (e.g. 11 seconds) is displayed.

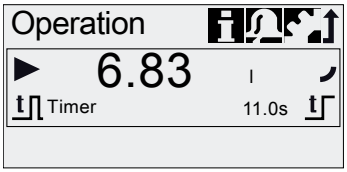

Fig. 30 Dosing timer cycle

7.4.6 Dosing timer week

In this operation mode, up to 16 dosing procedures are defined for a week. These dosing procedures may take place regularly on one or several week days. The setting range for the batch volume corresponds to the values in section *7.4.4 Batch (pulse-based)*.

When time or date is changed in "Time+date" menu, timer dosing and timer relay output functions (Relay 2) are stopped!

Timer dosing and timer relay output functions must be restarted manually!

Changing time or date can cause increase or decrease in concentration!

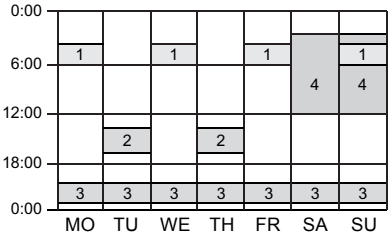

Fig. 31 Example for Dosing timer week function

If several procedures overlap, the process with the higher dosing flow has priority.

In the event of an interruption (e.g. disconnection of the mains voltage, External stop), the dosing is stopped while the time continues running. After suspending the interruption, the pump continues to dose according to the actual timeline position.

The following settings are required in the "Setup > Dosing timer week" menu for each dosing procedure:

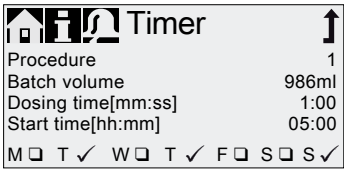

Fig. 32 Setting the timer

The batch volume (e.g. 986 ml) is set in the "Setup > Dosing timer week" menu. The dosing time required for this (e.g. 1 minute, 0 seconds) is displayed and can be changed.

In the "Operation" menu, the total batch volume (e.g. 986 ml) and the remaining batch volume to be dosed is displayed. During breaks in dosing, the time (e.g. 1 day, 2 hours) until the next dosing is displayed.

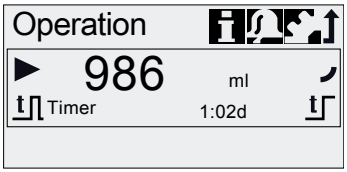

Fig. 33 Weekly timer dosing (break in dosing)

7.5 Analog output

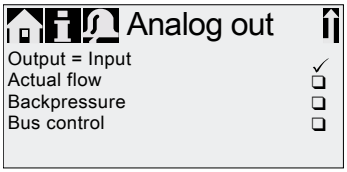

TM06 7094 2916

Fig. 34 Configure analog output

The analog output of the pump is parametrised in the "Setup > Analog output" menu. The following settings are possible:

Setting	Description of output signal	Variant FCM	Variant AR
Output = Input	Analog feedback signal (not for master-slave application). The analog input signal is mapped 1:1 to the analog output.	X	X
Actual flow**	Current actual flow • 0/4 mA = 0 % • 20 mA = 100 % see section *7.10 Flow measurement*	X	X*
Backpressure	Backpressure, measured in the dosing head • 0/4 mA = 0 bar • 20 mA = Max. operating pressure see section *7.9 Pressure monitoring*	X	
Bus control	Enabled by command in Bus control, see section *7.17 Bus communication*	X	X

* Output signal is based on motor speed and pump status (target flow).

** Signal has same analog scaling as the current analog input signal. See *7.4.3 Analog 0/4-20 mA*.

Wiring diagram see section *5.3 Electrical connection*.

In all operation modes, the analog output has a range of 4-20 mA. Exception: Operation mode 0-20 mA. Here, the analog output range is 0-20 mA.

7.6 SlowMode

When the "SlowMode" function is enabled, the pump slows down the suction stroke. The function is enabled in the "Setup > SlowMode" menu and is used to prevent cavitation in the following cases:

- for dosing media with a high viscosity
- for degassing dosing media
- for long inlet lines
- for large suction lift.

In the "Setup > SlowMode" menu, the speed of the suction stroke can be reduced to 50 % or 25 %.

Enabling the 'SlowMode' function reduces the maximum dosing flow of the pump to the set percentage value!

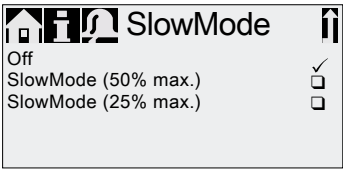

TM06 7094 2916

Fig. 35 SlowMode menu

7.7 Stop after power failure

This function is only available in pumps with software version V2.00 or higher.

The "Stop after power failure" function is used to prevent the pump from performing a reference movement and start dosing when the power supply is switched on or reestablished after a power failure.

A reference movement is performed every time the power supply is switched on. With the reference movement the pump identifies the exact diaphragm position to ensure accurate dosing. Depending on the initial diaphragm position, the reference movement can dose a small amount of dosing medium into the process. To avoid this, you can enable the "Stop after power failure" function.

The function is disabled by default.

When this function is enabled:

- The pump stops and displays an alarm when the power supply is switched on. The pump will perform the reference movement after the alarm was acknowledged by the user.
- Functions which require the reference movement are deactivated until the reference movement was performed. These functions are:
  - Auto deaeration
  - FlowControl
  - Moving the diaphragm into service position
  - Volume counter

To avoid dosing during the reference movement, perform the following steps after the power supply was switched on:

1. The pump is in operating state "Standby" and displays an alarm. Push the [Start/stop] key to set the pump to operating state "Stop".
2. Make sure a deaeration hose, which is routed into a container, e.g. a drip tray, is connected to the deaeration valve.
3. Open the deaeration valve by approximately half a turn.
4. Acknowledge the alarm on the display.
   - The pump performs the reference movement. The dosing medium flows through the deaeration hose and not into the process.
5. Close the deaeration valve.
6. Push the [Start/stop] key to start the pump.

7.8 FlowControl

Applies to DDA-FCM control variant.

This function is used to monitor the dosing process. Although the pump is running, various influences e.g. air bubbles, can cause a reduced flow or even stop the dosing process. In order to guarantee optimum process safety, the enabled "FlowControl" function directly detects and indicates the following errors and deviations:

- Overpressure
- Damaged outlet line
- Air in the dosing chamber
- Cavitation
- Inlet valve leakage > 70 %
- Outlet valve leakage > 70 %.

The occurrence of a fault is indicated by the "eye" symbol flashing. The faults are displayed in the "Alarm" menu. See section *9. Faults*.

FlowControl works with a maintenance-free sensor in the dosing head. During the dosing process, the sensor measures the current pressure and continuously sends the measured value to the microprocessor in the pump. An internal indicator diagram is created from the current measured values and the current diaphragm position (stroke length). Causes for deviations can be identified immediately by aligning the current indicator diagram with a calculated optimum indicator diagram. Air bubbles in the dosing head reduce e.g. the discharge phase and consequently the stroke volume (see fig. 36).

Requirements for a correct indicator diagram are:

- FlowControl function is active
- Pressure difference between inlet and outlet side is > 2 bar
- No interruption/pause in discharge stroke
- Pressure sensor and cable are functioning properly
- No leakage > 50 % in inlet or outlet valve

If one of these requirements is not met, the indicator diagram cannot be evaluated.

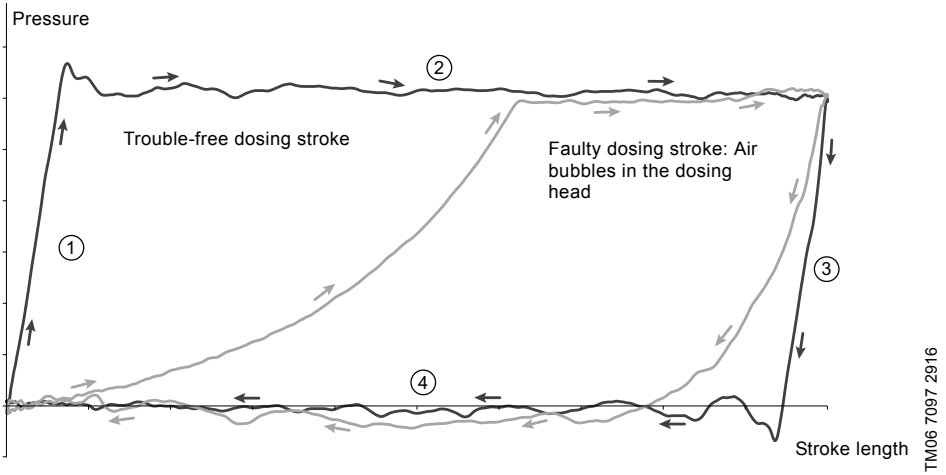

Fig. 36 Indicator diagram

1	Compression phase
2	Discharge phase
3	Expansion phase
4	Suction phase

Setting FlowControl

The "FlowControl" function is set using the two parameters "Sensitivity" and "Delay" in the "Setup > FlowControl" menu.

Sensitivity

In "Sensitivity" the deviation in stroke volume, which will result in an error message, is set in percent.

Sensitivity	Deviation
low	approx. 70 %
medium	approx. 50 %
high	approx. 30 %

Delay

The "Delay" parameter is used to define the time period until an error message is generated: "short", "medium" or "long". The delay depends on the set dosing flow and therefore cannot be measured in strokes or time.

Air bubbles

The "FlowControl" function identifies air bubbles > 60 % of the stroke volume. The pump adapts the stroke frequency to approximately 30-40 % of max. stroke frequency, and starts a special motor drive strategy. The adaptation of the stroke frequency allows the air bubbles to rise from inlet to outlet valve. Due to the special motor drive strategy the air bubbles are displaced from the dosing head into the outlet line.

If the air bubbles have not been eliminated after a maximum of 60 strokes, the pump returns to the normal motor drive strategy and displays the "Air bubble" warning.

7.9 Pressure monitoring

Applies to DDA-FCM control variant.

A pressure sensor monitors the pressure in the dosing head. If the pressure during the discharge phase falls below 2 bar, a warning is generated (pump continues running). If in the "Setup > Pressure monitoring" menu the function "Min. pressure alarm" is activated, an alarm is generated and the pump is stopped.

If the pressure exceeds the "Max. pressure" set in the "Setup > Pressure monitoring" menu, the pump stops dosing, switches to operating state "Standby" and indicates an alarm.

The pump restarts automatically once the backpressure falls below the set "Max. pressure"!

7.9.1 Pressure setting ranges

Type	Fixed min. pressure		Adjustable max. pressure	
	[bar]	[psi]	[bar]	[psi]
DDA 60-10	2	29	3-11	44-165
DDA 120-7	2	29	3-8	44-115
DDA 200-4	2	29	3-5	44-73

The pressure measured in the dosing head is slightly higher than the actual system pressure.

Therefore the "Max. pressure" should be set at least 1 bar higher than the system pressure.

7.9.2 Calibration of pressure sensor

The pressure sensor is calibrated in the factory. As a rule, it does not need to be re-calibrated. If specific circumstances (e.g. pressure sensor exchange, extreme air pressure values at the location of the pump) necessitate a calibration, the sensor can be calibrated as follows:

1. Set pump to "Stop" operating state.
2. Make system pressureless and flush.
3. Dismantle inlet line and inlet valve.

Calibrating when the inlet valve is installed produces incorrect calibration and can cause personal injuries and damage to property!

Only carry out a calibration if this is technically required!

4. Proceed as described below to calibrate:

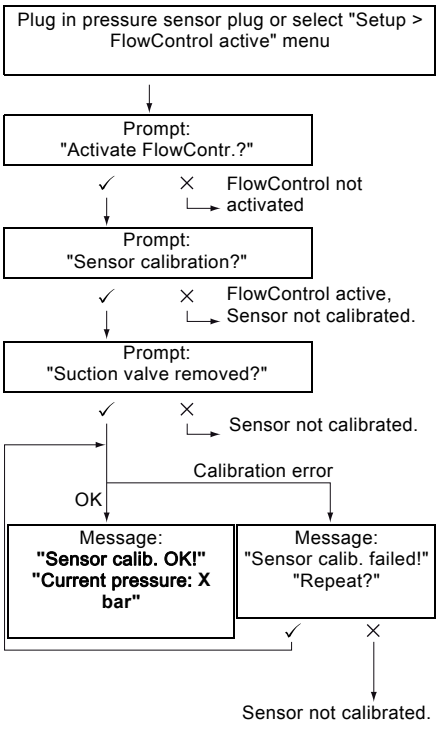

If a calibration is not successfully possible, check plug connections, cable and sensor and replace defective parts where necessary.

7.10 Flow measurement

Applies to DDA-FCM control variant.

The pump accurately measures the actual flow and displays it. Via the 0/4-20 mA analog output, the actual flow signal can easily be integrated into an external process control without additional measuring equipment. See section *7.5 Analog output*.

The flow measurement is based on the indicator diagram as described in section *7.8 FlowControl*. The accumulated length of the discharge phase multiplied by the stroke frequency produces the displayed actual flow. Faults e.g. air bubbles or backpressure that is too low result in a smaller or larger actual flow. When the "AutoFlowAdapt" function is activated (see section *7.11 AutoFlowAdapt*), the pump compensates for these influences by correction of the stroke frequency.

Strokes which cannot be analysed (partial strokes, pressure differential which is too low) are provisionally calculated based on the setpoint value and displayed.

7.11 AutoFlowAdapt

Applies to DDA-FCM control variant.

The "AutoFlowAdapt" function can be activated via the "Setup" menu. It detects changes in various parameters and responds accordingly in order to keep the set target flow constant.

Dosing accuracy is increased when "AutoFlowAdapt" is activated.

This function processes information from the pressure sensor in the dosing head. The pump responds immediately regardless of the operation mode by adjusting the stroke frequency.

If the target flow cannot be achieved by the adjustments, a warning is issued.

"AutoFlowAdapt" operates on the basis of the following functions:

- FlowControl: malfunctions are identified. See section *7.8 FlowControl*.
- Pressure monitoring: pressure fluctuations are identified. See section *7.9 Pressure monitoring*.
- Flow measurement: deviations from the target flow are identified. See section *7.10 Flow measurement*.

Example of "AutoFlowAdapt"

Pressure fluctuations

The dosing volume decreases as backpressure increases and conversely the dosing volume increases as the backpressure decreases.

The "AutoFlowAdapt" function compensates pressure fluctuations by adjusting the stroke frequency. The actual flow is thus maintained at a constant level.

7.12 Auto deaeration

Dosing degassing media can result in air pockets in the dosing head during breaks in dosing. This can result in no medium being dosed when restarting the pump. The "Setup > Auto deaeration" function performs pump deaeration automatically at regular intervals.
Software-controlled diaphragm movements encourage any bubbles to rise and gather at the outlet valve so that they can be removed on the next dosing stroke.

The function works:

- when the pump is not in the "Stop" operating state and no alarm is active
- during breaks in dosing (e.g. External stop, no incoming pulses, etc.).

The diaphragm movements can displace small volumes into the outlet line. When dosing strongly degassing media, this is however virtually impossible.

7.13 Diaphragm leak. detect.

Applies to DDA-AR control variant.

This function is only available if the pump is equipped with a special dosing head for leakage detection. See section *3.5 Type key*.

The "Diaphragm leak. detect." function can be activated via the "Setup" menu. It detects diaphragm leakages. When a leakage is detected, the pump stops and an alarm is displayed.

See also sections:

- *1.6.1 Diaphragm leakage detection (optional)*
- *7.2.4 Overview of display symbols*
- *9.1 List of faults*

7.14 Key lock

The key lock is set in the "Setup > Key lock" menu by entering a four-digit code. It protects the pump by preventing changes to settings. Two levels of key lock can be selected:

Level	Description
Settings	All settings can only be changed by entering the lock code. The [Start/stop] key and the [100%] key are not locked.
Settings + keys	The [Start/stop] key and the [100%] key and all settings are locked.

It is still possible to navigate in the "Alarm" and "Info" main menu and reset alarms.

7.14.1 Temporary deactivation

If the "Key lock" function is activated but settings need to be modified, the keys can be unlocked temporarily by entering the deactivation code. If the code is not entered within 10 seconds, the display automatically switches to the "Operation" main menu. The key lock remains active.

7.14.2 Deactivation

The key lock can be deactivated in the "Setup > Key lock" menu via the "Off" menu point. The key lock is deactivated after the general code "2583" or a pre-defined custom code has been entered.

7.15 Display setup

Use the following settings in the "Setup > Display" menu to adjust the display properties:

- Units (metric/US)
- Display contrast
- Additional display.

7.15.1 Units

Metric units (litres/millilitres/bar) or US units (US gallons/PSI) can be selected. According to the operation mode and menu, the following units of measurement are displayed:

Operation mode / function	Metric units	US units
Manual control	ml/h or l/h	gph
Pulse control	ml/⊓	ml/⊓
0/4-20 mA Analog control	ml/h or l/h	gph
Batch (pulse- or timer-controlled)	ml or l	gal
Calibration	ml	ml
Volume counter	l	gal
Pressure monitoring	bar	psi

7.15.2 Additional display

The additional display provides additional information about the current pump status. The value is shown in the display with the corresponding symbol.

In "Manual" mode the "Actual flow" information can be displayed with Q = 31.9 l/h (see fig. 37).

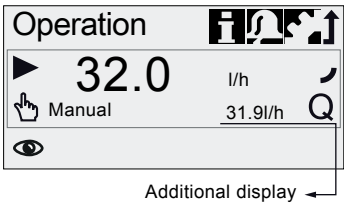

TM06 7103 2916

Fig. 37 Display with additional display

The additional display can be set as follows:

Setting	Description
Default display	Depending on the operation mode:
	Q Actual flow (Manual/Pulse)[1), 2)]
	Q Target flow (Pulse)
	Input current (analog)
	Remaining batch volume (Batch, Timer)
	t Period until next dosing (Timer)
Dosed volume	V Dosed vol. since last reset (see *Counters* on page 24)
Actual flow	Q Current actual flow[1), 2)]
Backpressure	P Current backpressure in the dosing head[1)]

1) only control variant DDA-FCM

2) only if indicator diagram can be evaluated (see *7.8 FlowControl*)

7.16 Time+date

The time and date can be set in the "Setup > Time+date" menu.

The conversion between summer and winter time does not take place automatically.

When time or date is changed in "Time+date" menu, timer dosing and timer relay output functions (Relay 2) are stopped!

Timer dosing and timer relay output functions must be restarted manually!

Changing time or date can cause increase or decrease in concentration!

7.17 Bus communication

BUS

The bus communication enables remote monitoring and setting of the pump via a fieldbus system.

Further manuals, functional profiles and support files (e.g. GSD-files) are available on the CD delivered with the interface hardware and on www.grundfos.com.

7.17.1 GENIbus communication

The pump is supplied with an integrated module for GENIbus communication. The pump identifies the bus control after connecting to the corresponding signal input. The "Activate communication?" prompt is displayed. After confirmation, the corresponding symbol appears in the "Activated functions" area in the "Operation" menu.

In the "Setup > Bus" menu the GENIbus address can be set from 32 to 231 and bus control can be deactivated.

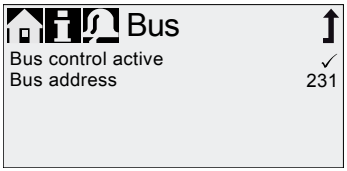

TM06 7111 2916

Fig. 38 Bus menu

The maximum cable length for GENIbus connection is 3 m and must not be exceeded.

7.17.2 Possible industrial bus types

The pump can be connected to a Grundfos CIU unit (CIU = Communication Interface Unit) equipped with one of the following CIM modules (CIM = Communication Interface Module):

- CIM150 Profibus
- CIM200 Modbus
- CIM260 3G/4G/SMS
- CIM280 3G/4G/GRM/GIC
- CIM500 Ethernet

For internal communication between the CIU and the dosing pump, GENIbus is used.

The maximum cable length for GENIbus connection is 3 m and must not be exceeded.

Prior to installation and startup, read the documentation delivered with the CIU unit.

7.17.3 Activate communication

1. Set the pump to operating state "Stop" with the [Start/stop] key.
2. Switch off the power supply of the pump.
3. Install and connect the CIU as described in the respective separate installation and operating instructions.
4. Switch on the power supply of the pump.

The "Activate communication?" prompt is displayed.

After confirmation, the "Bus" symbol appears in the "Activated functions" area of the "Operation" menu, no matter if the prompt was accepted or refused.

If the prompt has been accepted, the bus control function is activated. If the prompt has been refused, bus control function can be activated in "Setup > Bus" menu.

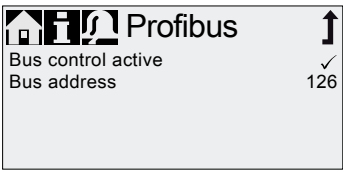

TM06 7111 2916

Fig. 39 Example of submenu for Profibus®

7.17.4 Setting the bus address

1. Enter "Setup > Bus" menu and set desired bus address:

Bus type	Address range
Profibus® DP	0-126
Modbus RTU	1-247

2. The pump needs to be restarted to initialise the new bus address. Switch off the power supply of the pump and wait for approximately 20 seconds.
3. Switch on the power supply of the pump.

The pump is initialised with the new bus address.

7.17.5 Characteristics of bus communication

To start and stop the pump via bus, it needs to be in operating state "Running". When the pump is remotely stopped from bus, the "External stop" symbol is displayed and the pump switches to operating state "Standby".

While bus control function is activated, the "Setup" menu only shows the "Bus" and "Key lock" submenus. The other main menus, the "External stop" function and the keys are still available.

All operation modes (see section *7.4 Operation modes*) can still be used when bus control is activated. This allows to use the bus control only for monitoring and setting the pump. In this case the respective "BusWatchDog" (see functional profile on CIM/CIU product CD) should be deactivated in bus control, because otherwise faults in communication can stop the pump.

To change any settings manually, the bus control function must be deactivated temporarily.

7.17.6 Deactivate communication

After deactivating the bus control function, the pump can start automatically.

CAUTION

Automatic startup

Minor or moderate personal injury

- Before deactivating the bus control function, set the pump to operating state "Stop".

Bus control function can be deactivated in the "Setup > Bus" menu. After deactivation all submenus in "Setup" menu are available.

The "Bus" symbol in the display disappears at next restart of the pump, after the CIU plug was disconnected.

After disconnecting any plug, always refit protective cap.

7.17.7 Communication faults

Faults are only detected, if the respective "BusWatchDog" (see functional profile on CIM/CIU product CD) is activated.

After a communication fault is repaired, the pump can start automatically, depending on current bus control and pump settings.

CAUTION

Automatic startup

Minor or moderate personal injury

- Before repairing any fault, set the pump to operating state "Stop".

In case of bus communication faults (e.g. communication cable break), the pump stops dosing and switches to operating state "Standby" approximately 10 seconds after the fault was detected. An alarm is triggered, detailing the cause of the fault. See section *9. Faults*.

7.18 Inputs/Outputs

In the "Setup > Inputs/Outputs" menu, you can configure the two outputs "Relay 1+Relay 2" and the signal inputs "External stop", "Empty signal" and "Low-level signal".

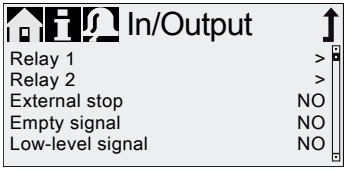

TM06 7112 2916

Fig. 40 Inputs/Outputs menu

When time or date is changed in "Time+date" menu, timer dosing and timer relay output functions (Relay 2) are stopped!

Timer dosing and timer relay output functions must be restarted manually!

Changing time or date can cause increase or decrease in concentration!

7.18.1 Relay outputs

The pump can switch two external signals using installed relays. The relay outputs are potential-free. The connection diagram of the relays is shown in section *5.3 Electrical connection*. Both relays can be allocated with the following signals:

Relay 1 signal	Relay 2 signal	Description
Alarm*	Alarm	Display red, pump stopped (e.g. empty signal, etc.)
Warning*	Warning	Display yellow, pump is running (e.g. low-level signal, etc.)
Stroke signal	Stroke signal	Each full stroke
Pump dosing	Pump dosing*	Pump running and dosing
Pulse input**	Pulse input**	Each incoming pulse from pulse input
Bus control	Bus control	Activated by a command in the bus communication
	Timer Cycle	See following sections
	Timer Week	See following sections
Contact type		
NO*	NO*	Normally open contact
NC	NC	Normally closed contact

* Factory setting

** The correct transmission of incoming pulses can only be guaranteed up to a pulse frequency of 5 Hz.

Continuous operation of the relays on a high frequency reduces the relay lifetime significantly.

Timer Cycle (Relay 2)

For the "Relay 2 > Timer Cycle" function, set the following parameters:

- On (t_1)
- Start delay (t_2)
- Cycle time (t_3).

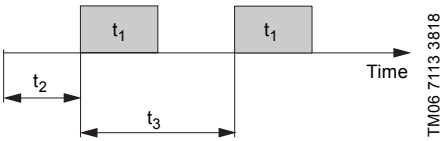

Fig. 41 Diagram

Timer Week (Relay 2)

This function saves up to 16 relay on-times for a week. The following settings can be made for each relay switching operation in the "Relay 2 > Timer Week" menu:

- Procedure (No.)
- On time (duration)
- Start time
- Weekdays.

7.18.2 External stop

The pump can be stopped via an external contact, e.g. from a control room. When activating the external stop signal, the pump switches to operating state "Standby". The corresponding symbol appears in the "Signal/error display" area of the display.

Frequent disengagement from the mains voltage, e.g. via a relay, can result in damage to the pump electronics and in the breakdown of the pump. The dosing accuracy is also reduced as a result of internal start procedures.

Do not control the pump via the mains voltage for dosing purposes!

Only use the "External stop" function to start and stop the pump!

The contact type is factory-set to normally open contact (NO). In the "Setup > Inputs/Outputs > External stop" menu, the setting can be changed to normally closed contact (NC).

7.18.3 Empty and Low level signals

In order to monitor the filling level in the tank, a dual-level sensor can be connected to the pump. The pump responds to the signals as follows:

Sensor signal	Pump status
Low level	• Display is yellow • ▼ Flashes • Pump continues running
Empty	• Display is red • ▼ Flashes • Pump stops dosing

CAUTION

Automatic startup

Minor or moderate personal injury

- When the tank is filled up again, the pump restarts automatically.

Both signal inputs are allocated to the normally open contact (NO) in the factory. They can be re-allocated in the "Setup > Inputs/Outputs" menu to normally closed contact (NC).

7.19 Basic settings

All settings can be reset to the settings default upon delivery in the "Setup > Basic settings" menu.

Selecting "Save customer settings" saves the current configuration to the memory. This can then be activated using "Load customer settings".

The memory always contains the previously saved configuration. Older memory data is overwritten.

8. Service

In order to ensure a long service life and dosing accuracy, wearing parts such as diaphragms and valves must be regularly checked for signs of wear. Where necessary, replace worn parts with original spare parts made from suitable materials.

Should you have any questions, please contact your Grundfos service partner.

Maintenance work must only be carried out by qualified persons.

The pump housing must only be opened by persons authorised by Grundfos. Observe section *8.7 Repairs*.

8.1 Regular maintenance

Interval	Task
Daily	Check, if liquid leaks from the drain opening on the dosing head and if the drain opening is blocked or soiled. See fig. 44-45, pos. 8. If so, follow the instructions given in section *8.6 Diaphragm leakage*.
	Check, if liquid leaks from the dosing head or valves. If necessary, tighten dosing head screws with a torque wrench. Torque [Nm]: 6 (+ 1). If necessary, tighten valves and cap nuts, or perform service. See section *8.4 Perform service*.
	Check, if a service requirement is present at the pump display. If so, follow the instructions given in section *8.3 Service system*.
Weekly	Clean all pump surfaces with a dry and clean cloth.
Every 3 months	Check dosing head screws. If necessary, tighten dosing head screws with a torque wrench. Torque [Nm]: 6 (+ 1). Replace damaged screws immediately.

8.2 Cleaning

If necessary, clean all pump surfaces with a dry and clean cloth.

8.3 Service system

According to the motor runtime or after a defined period of operation, service requirements will appear. Service requirements appear regardless of the current operating state of the pump and do not affect the dosing process.

Service requirement	Motor runtime [h]*	Time interval [months]*
Service soon!	7500	23
Service now!	8000	24

* Since the last service system reset

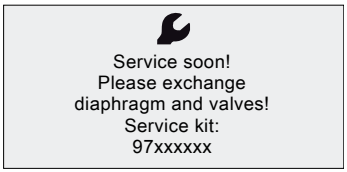

TM06 7117 2916

Fig. 42 Service soon!

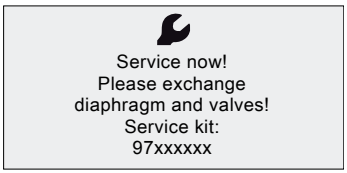

TM06 7117 2916

Fig. 43 Service now!

For media which result in increased wear, the service interval must be shortened.

The service requirement signals when the replacement of wearing parts is due and displays the order number of the service kit. Press the click wheel to temporarily hide the service prompt.

The displayed service kit contains the standard service parts.

For the full range of service kits and spare parts see the service kit catalogue:

- http://net.grundfos.com/qr/i/96488862_23

or the Grundfos Product Center:

- https://product-selection.grundfos.com

When the "Service now!" message appears (displayed daily), the pump must be serviced immediately. The symbol appears in the "Operation" menu.

The order number of the service kit required is also displayed in the "Info" menu.

8.4 Perform service

Only spare parts and accessories from Grundfos should be used for maintenance. The usage of non-original spare parts and accessories renders any liability for resulting damages null and void.

CAUTION

Chemical hazard

Minor or moderate personal injury

- Observe the material safety data sheet of the dosing medium.
- Wear protective clothing (gloves and goggles) when working on the dosing head, connections or lines.
- Collect and dispose of all chemicals in a way that is not harmful to humans, animals and the environment.

Before starting work on the pump, the pump must be in the "Stop" operating state or be disconnected from the power supply. The system must be pressureless.

8.4.1 Service overview

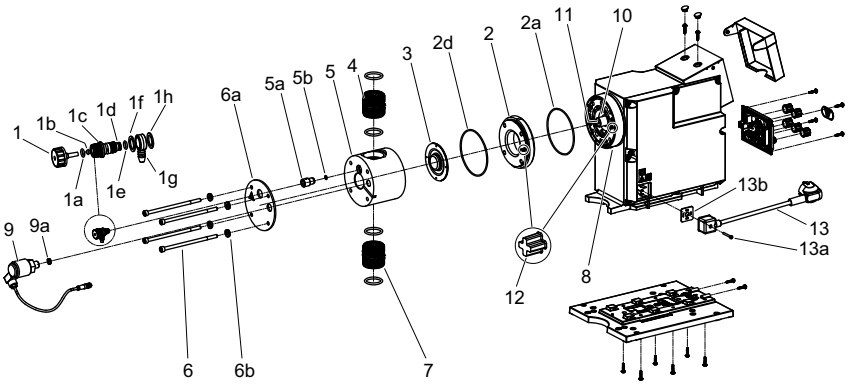

Fig. 44 DDA 60-10

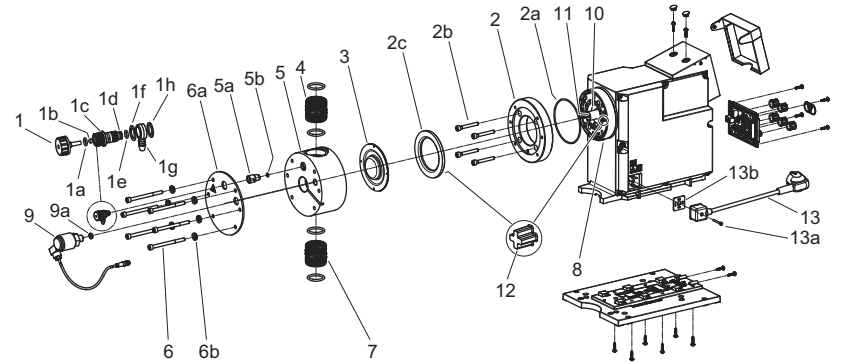

Fig. 45 DDA 120-7 / DDA 200-4

Pos.	Components
1	Deaeration screw
1a, 1e	O-ring
1b	Valve ball
1c	Valve housing
1d	Groove for O-ring
1f, 1h	Flat gasket
1g	Hose nipple
2	Flange
2a, 2d	O-ring
2b	Screws
2c	Intermediate ring
3	Diaphragm
4	Valve on outlet side
5	Dosing head
5a	Double nipple
5b	O-ring
6	Screws

Pos.	Components
6a	Cover plate (plastic dosing heads only)
6b	Washers (stainless steel dosing heads only)
7	Valve on inlet side
8	Drain opening
9	DLD sensor
9a	Gasket
10	Safety diaphragm
11	Extension piece
12	Alignment pin
13	Mains cable
13a	Safety screw
13b	Gasket

8.4.2 Dismantling the dosing head, diaphragm and valves

If the diaphragm is possibly damaged, don't connect the pump to the power supply! Proceed as described in section *8.6 Diaphragm leakage*.

This section refers to fig. 44-45.

1. Put on the stipulated personal protective equipment.
2. Set pump to "Stop" ■ operating state using the [Start/stop] key.
3. Make system pressureless.
4. Take suitable steps to ensure that the returning liquid is safely collected.
5. Empty dosing head and flush it if necessary.
6. Press the [Start/stop] and [100%] keys at the same time to put the diaphragm into "out" position.
   – Symbol (– must be displayed (see fig. 17).
   – If the "Stop after power failure" alarm is active, acknowledge the alarm by opening the "Alarm" main menu. Otherwise the diaphragm cannot be moved.
7. Dismantle inlet, outlet and deaeration lines.
8. Unscrew valves on inlet and outlet side (4, 7).
9. Disconnect FlowControl or DLD signal connection, if present. See fig. 13-14.
10. For plastic dosing head:
    – Remove screws (6).
    – Remove dosing head (5) together with cover plate (6a).
11. For stainless steel dosing head:
    – Remove screws (6) together with washers (6b).
    – Remove dosing head (5).
12. Unscrew diaphragm (3) counter-clockwise and remove it.
13. DDA 60-10:
    – Remove flange (2) together with O-rings (2a, 2d).
14. DDA 120-7 / DDA 200-4:
    – Remove intermediate ring (2c).
    – Remove screws (2b) together with flange (2) and O-ring (2a).
15. Make sure the drain opening (8) is not blocked or soiled. Clean if necessary.
16. Check the safety diaphragm (10) for wear and damage. If the safety diaphragm is damaged, send the pump to Grundfos for repair. See section *8.7 Repairs*.

If nothing indicates that dosing liquid has entered the pump housing, go on as described in section *8.4.3 Reassembling the dosing head, diaphragm and valves*. Otherwise proceed as described in section *8.6.2 Dosing liquid in the pump housing*.

8.4.3 Reassembling the dosing head, diaphragm and valves

The pump must only be reassembled, if nothing indicates that dosing liquid has entered the pump housing. Otherwise proceed as described in section *8.6.2 Dosing liquid in the pump housing*.

This section refers to fig. 44-45.

1. DDA 60-10:
   – Place new O-rings (2a, 2d) in the grooves at flange (2) and make sure they are seated correctly.
   – Attach flange (2) observing alignment pin (12).
2. DDA 120-7 / DDA 200-4:
   – Install flange (2) and new O-ring (2a) with screws (2b) observing alignment pin (12). Make sure the O-ring is seated correctly.
   – Cross-tighten screws (2b) with a torque wrench. Torque [Nm]: 6 (+ 1).
   – Attach intermediate ring (2c) to flange (2) observing alignment pin (12).
3. Screw on the new diaphragm (3) clockwise.
   – Make sure the diaphragm is screwed on completely and fully resting on extension piece (11).
4. Press the [Start/stop] and [100%] keys at the same time to put the diaphragm into "in" position.
   – Symbol)– must be displayed (see fig. 17).
5. Attach dosing head (5).
   – DDA 60-10: Observe alignment pin (12).
6. For plastic dosing head:
   – Install screws (6) through cover plate (6a).
7. For stainless steel dosing head:
   – Install screws (6) with washers (6b).
8. Cross-tighten screws (6) with a torque wrench.
   – Torque [Nm]: 6 (+ 1).
9. Connect FlowControl or DLD signal connection, if present. See fig. 13-14.
10. Install new valves (4, 7).
    – Pay attention to the flow direction arrow.
    – Make sure the O-rings are seated correctly.
11. Perform hydraulic connection. See section *5.2 Hydraulic connection*.
12. Press the [Start/stop] key to leave the service mode.

Tighten the dosing head screws with a torque wrench before startup and every time the dosing head has been opened. After 48 operating hours, retighten the dosing head screws using a torque wrench. Torque [Nm]: 6 (+ 1).

13. Deaerate the dosing pump. See section *6.4 Deaerating the pump*.
14. Observe the notes on commissioning in section *6. Startup*.
15. If you installed a new dosing head with pressure sensor, perform sensor calibration. See section *7.9.2 Calibration of pressure sensor*.

8.4.4 Replacing the deaeration valve

This procedure requires a special tool kit. See service kit catalogue:

- http://net.grundfos.com/qr/i/96488862_23

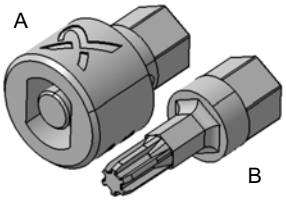

TM07 2852 4218

Fig. 46 Special tool kit

Pos.	Description
A	Special tool for valve housing
B	Special tool for double nipple

This section refers to fig. 44-46.

1. Put on the stipulated personal protective equipment.
2. Switch off the power supply.
3. Make system pressureless.
4. Take suitable steps to ensure that the returning liquid is safely collected.
5. Empty dosing head and flush it if necessary.
6. Dismantle deaeration line.
7. Manually unscrew deaeration screw (1).
   – Do not use any tools, otherwise deaeration valve parts can break.
   – O-ring (1a) normally remains on the deaeration screw.
   – Valve ball (1b) normally remains in valve housing (1c).
8. Use special tool (A) to unscrew valve housing (1c) from double nipple (5a).
9. Remove hose nipple (1g) and flat gaskets (1f, 1h).
10. Use special tool (B) to unscrew double nipple (5a).

Reassemble the deaeration valve with new parts as follows:

11. Put in O-ring (5b).
12. Use special tool (B) to screw in the new double nipple (5a) carefully with a torque wrench.
    – Torque [Nm]: 3 (+/- 0.2).
13. Make sure that O-ring (1e) is seated correctly in groove (1d).
14. Put flat gasket (1f) followed by hose nipple (1g) and flat gasket (1h) onto valve housing (1c).
15. Use special tool (A) to screw in valve housing (1c) into double nipple (5a) carefully with a torque wrench.
    – Torque [Nm]: 2 (+/- 0.2).
16. Make sure that O-ring (1a) is placed correctly on deaeration screw (1).
17. Check that valve ball (1b) is correctly pre-assembled in valve housing (1c).
18. Manually screw in deaeration screw (1).
19. Deaerate the dosing pump. See section *6.4 Deaerating the pump*.
20. Observe the notes on commissioning in section *6. Startup*.

8.4.5 Replacing the DLD sensor

This section refers to fig. 44-45.

1. Put on the stipulated personal protective equipment.
2. Switch off the power supply.
3. Make system pressureless.
4. Take suitable steps to ensure that the returning liquid is safely collected.
5. Empty dosing head and flush it if necessary.
6. Disconnect DLD signal connection. See fig. 14.
7. Carefully unscrew DLD sensor (9) with an open-end spanner that fits accurately.
8. Replace gasket (9a).
9. Carefully screw in the new sensor into the dosing head with an open-end spanner that fits accurately.
   – Torque [Nm]: 2 (+ 0.5).
10. Connect DLD signal connection.
11. Deaerate the dosing pump. See section *6.4 Deaerating the pump*.
12. Observe the notes on commissioning in section *6. Startup*.

8.4.6 Replacing the mains cable

All electrical connections must be carried out by a qualified electrician in accordance with local regulations.

1. Disconnect the pump from the power supply.
2. Unscrew safety screw (13a).
3. Replace mains cable (13) and gasket (13b).
4. Carefully screw in safety screw (13a) with a torque wrench.
   – Torque [Nm]: 0.4 (+/- 0.1)

The pump can start automatically when the power supply is switched on.

CAUTION

Automatic startup

Minor or moderate personal injury

- Make sure the pump has been correctly installed and is ready to be started before you switch on the power supply.

The enclosure class (IP65 / Nema 4X) is only guaranteed if plugs or protective caps are correctly installed.

Do not manipulate mains plug or cable.

8.5 Resetting the service system

After performing the service, the service system must be reset using the "Info > Reset service system" function.

8.6 Diaphragm leakage

If the diaphragm leaks or is broken, dosing liquid escapes from the drain opening on the dosing head. See fig. 4, pos. 16.

In case of diaphragm leakage, the safety diaphragm (fig. 44-45, pos. 10) protects the pump housing against ingress of dosing liquid.

When dosing crystallising liquids the drain opening can be blocked by crystallisation. If the pump is not taken out of operation immediately, a pressure can build up between the diaphragm (fig. 44-45, pos. 3) and the safety diaphragm. The pressure can press dosing liquid through the safety diaphragm into the pump housing.

Most dosing liquids don't cause any danger when entering the pump housing. However a few liquids can cause a chemical reaction with inner parts of the pump. In the worst case, this reaction can produce explosive gases in the pump housing.

WARNING

Danger of explosion, if dosing liquid has entered the pump housing!

Death or serious personal injury

Operation with damaged diaphragm can lead to dosing liquid entering the pump housing.

- In case of diaphragm leakage, immediately separate the pump from the power supply!
- Make sure the pump cannot be put back into operation by accident!
- Dismantle the dosing head without connecting the pump to the power supply and make sure no dosing liquid has entered the pump housing. Proceed as described in section *8.6.1 Dismantling the dosing head, diaphragm and valves in case of diaphragm leakage*.

To avoid any danger resulting from diaphragm leakage, observe the following:

- Perform regular maintenance. See section *8.1 Regular maintenance*.
- Never operate the pump with blocked or soiled drain opening.
  – If the drain opening is blocked or soiled, proceed as described in section *8.6.1 Dismantling the dosing head, diaphragm and valves in case of diaphragm leakage*.
- Take suitable precautions to prevent harm to health and damage to property from escaping dosing liquid.
- Never operate the pump with damaged or loose dosing head screws.

8.6.1 Dismantling the dosing head, diaphragm and valves in case of diaphragm leakage

Do not connect the pump to the power supply!

This section refers to fig. 44-45.

1. Put on the stipulated personal protective equipment.
2. Make system pressureless.
3. Take suitable steps to ensure that the returning liquid is safely collected.
4. Empty dosing head and flush it if necessary.
5. Dismantle inlet, outlet and deaeration lines.
6. Unscrew valves on inlet and outlet side (4, 7).
7. Disconnect FlowControl or DLD signal connection, if present. See fig. 13-14.
8. For plastic dosing head:
   – Remove screws (6).
   – Remove dosing head (5) together with cover plate (6a).
9. For stainless steel dosing head:
   – Remove screws (6) together with washers (6b).
   – Remove dosing head (5).
10. Unscrew diaphragm (3) counter-clockwise and remove it.
11. DDA 60-10:
    – Remove flange (2) together with O-rings (2a, 2d).
12. DDA 120-7 / DDA 200-4:
    – Remove intermediate ring (2c).
    – Remove screws (2b) together with flange (2) and O-ring (2a).
13. Make sure the drain opening (8) is not blocked or soiled. Clean if necessary.
14. Check the safety diaphragm (10) for wear and damage. If the safety diaphragm is damaged, send the pump to Grundfos for repair. See section *8.7 Repairs*.

If nothing indicates that dosing liquid has entered the pump housing, go on as described in section *8.4.3 Reassembling the dosing head, diaphragm and valves*. Otherwise proceed as described in section *8.6.2 Dosing liquid in the pump housing*.

8.6.2 Dosing liquid in the pump housing

Immediately separate the pump from the power supply!

Make sure the pump cannot be put back into operation by accident!

If dosing liquid has entered the pump housing:

- Send the pump to Grundfos for repair, following the instructions given in section *8.7 Repairs*.
- If a repair isn't economically reasonable, dispose of the pump observing the information in section *10. Disposal*.

8.7 Repairs

The pump housing must only be opened by persons authorised by Grundfos.

Repairs must only be carried out by authorised and qualified persons.

For pump repair contact your local Grundfos supplier. If your local Grundfos supplier asks you to send the pump to Grundfos for repair, fill in the safety declaration in English and attach it to the pump for shipping. The safety declaration can be found at the end of these instructions.

The pump must be cleaned prior to dispatch!

If dosing liquid has possibly entered the pump housing, state that explicitly in the safety declaration! Observe section *8.6 Diaphragm leakage*.

If the above requirements are not met, Grundfos may refuse to accept delivery of the pump. The shipping costs will be charged to the sender.

Observe section *2.3 Transport*.

9. Faults

In the event of faults, a warning or an alarm is triggered. The corresponding fault symbol flashes in the "Operation" menu, see section *9.1 List of faults*. The cursor jumps to the "Alarm" main menu symbol.

Some alarms are automatically acknowledged by opening the "Alarm" main menu, which can cause the pump to start.

CAUTION

Automatic startup

Minor or moderate personal injury

- Before entering the "Alarm" main menu, make sure the pump is in operating state "Stop".

Press the click wheel to open the "Alarm" main menu.

A yellow display indicates a warning and the pump continues running.

A red display indicates an alarm and the pump stops dosing. For some alarms the pump tries to restart periodically. When the cause of the alarm has been remedied, the pump starts automatically and switches back to normal operation.

CAUTION

Automatic startup

Minor or moderate personal injury

- Before remedying the cause of the fault, make sure the pump is ready to be started.

Before starting work on the pump, the pump must be in the "Stop" operating state or be disconnected from the power supply. The system must be pressureless.

The last 10 faults are stored in the "Alarm" main menu. When a new fault occurs, the oldest fault is deleted.

The two most recent faults are shown in the display, you can scroll through all the other faults. The time and cause of the fault are displayed.

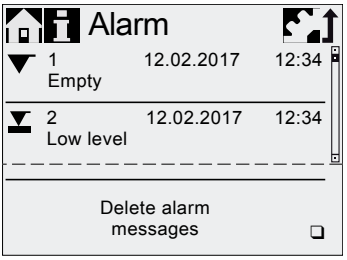

TM06 7072 2916

The list of faults can be deleted at the end of the list.

If there is a service requirement, this appears when the "Alarm" menu is opened. Press the click wheel to temporarily close the service prompt. See section *8.3 Service system*.

9.1 List of faults

9.1.1 Faults with error message

Display in the "Alarm" menu	Possible cause	Possible remedy
Empty (Alarm)	• Dosing medium tank empty	• Fill tank. • Check plug connection. • Check contact setting (NO/NC).
Low level (Warning)	• Dosing medium tank almost empty	
Overpressure (Alarm)	• Outlet valve blocked	• Replace valve if necessary. See section *8.4 Perform service*.
	• Isolating valve in outlet line closed	• Check flow direction of valves (arrow) and correct if necessary. • Open the isolating valve (on the outlet side).
	• Backpressure exceeds max. operating pressure	• Reduce backpressure. Observe section *4.1 Technical data*.
	• Pressure peaks due to high viscosity	• Enlarge diameter of outlet line.
	• Max. pressure is set too low. See section *7.9 Pressure monitoring*.	• Change pressure setting. See section *7.9 Pressure monitoring*.
Low backpressure (Warning/alarm*)	• Faulty diaphragm	• Change the diaphragm. See section *8.4 Perform service*.
	• Broken outlet line	• Check outlet line and repair if necessary.
	• Pressure differential between inlet and outlet side too low • Leakage in the pressure loading valve at Q < 1 l/h	• Install additional spring-loaded valve (approx. 2 bar) on the outlet side to increase the pressure differential.
	• Deaeration valve open	• Close the deaeration valve.
Air bubble (Warning)	• Broken/leaky inlet line	• Check inlet line and repair if necessary. • Provide positive inlet pressure (place dosing medium tank above the pump).
	• Strongly degassing medium	• Enable "SlowMode". See section *7.6 SlowMode*.
	• Tank dosing medium empty	• Fill tank.
Cavitation (Warning)	• Blocked / constricted / squeezed inlet line • Blocked/constricted inlet valve • Suction lift too high • Viscosity too high	• Enable "SlowMode". See section *7.6 SlowMode*. • Reduce suction lift. • Increase inlet line diameter. • Check inlet line and open isolating valve if necessary.
Suct. valve leak (Warning)	• Leaky/dirty inlet valve. Dosing medium flows back from the dosing head into the inlet line which reduces the target flow. • Leakage in pressure valve or pressure loading valve	• Check valve and tighten it up. • Flush system. • Replace valve if necessary. See section *8.4 Perform service*. • Check O-ring position. • Install strainer in inlet line.
	• Deaeration valve open	• Close the deaeration valve.
Flow deviation (Warning)	• Considerable deviation between target and actual flow	• Check installation.
	• Pump not or incorrectly calibrated	• Calibrate the pump. See section *6.5 Calibrating the pump*.

Display in the "Alarm" menu	Possible cause	Possible remedy
Disch. valve leak (Warning)	• Leaky/dirty outlet valve. Dosing medium flows back from the outlet line into the dosing head which reduces the target flow.	• Check valve and tighten it up. Replace valve if necessary. See section *8.4 Perform service*. • Flush system. • Check O-ring position. • Install strainer in inlet line. • Install spring-loaded valve on the outlet side.
Overload (Alarm)	• Backpressure exceeds max. operating pressure	• Reduce backpressure. Observe section *4.1 Technical data*.
	• Outlet valve blocked • Isolating valve in outlet line closed	• Replace valve if necessary. See section *8.4 Perform service*. • Check flow direction of valves (arrow) and correct if necessary. • Open the isolating valve (on the outlet side).
	• Pressure peaks	• Enlarge diameter of outlet line. • Install a pulsation damper in the outlet line close to the outlet valve.
	• Ambient temperature below specified minimum value. See section *4.1 Technical data*.	• Adjust ambient temperature to specified value.
Pressure sensor (Warning)	• Broken "FlowControl" cable or sensor (see fig. 13)	• Check plug connection. • Replace dosing head with sensor if necessary. • If the "Flow control" connection at the pump is damaged, send the pump for repair. See section *8.7 Repairs*.
Motor blocked (Alarm)	• Backpressure greater than nominal pressure	• Reduce backpressure.
	• Incorrectly installed diaphragm	• Install the diaphragm correctly.
	• Damage to gears • Hall sensor failure • Motor failure	• Contact your Grundfos service partner.
Bus error (Alarm)	• Fieldbus communication error	• Check cables for correct specification and damage; replace if necessary. • Check cable routing and shielding; correct if necessary.
CIU (Alarm)	• CIU connection error	• Check plug connection.
	• Faulty CIU	• Replace CIU if necessary.
Sensor signal (Alarm)	• Sensor signal out of range 0/4-20 mA	• Check cable/plug connections and replace, if necessary. • Check signal transmitter.
Stop after power failure (Alarm)	• Function "Stop after power failure" is enabled and power supply was switched on or reestablished after power failure.	• Check power supply and mains cable. • Read section *7.7 Stop after power failure*.
Diaphragm leak. (Alarm)	• Diaphragm leakage	• Read section *8.6 Diaphragm leakage* • Change the diaphragm. See section *8.4 Perform service*.

Display in the "Alarm" menu	Possible cause	Possible remedy
Disch. valve leak (Alarm)	• Leaky/dirty outlet valve. Dosing medium flows back from the outlet line into the dosing head and moves the motor. • Inlet pressure too high. Dosing medium flows from the inlet line into the dosing head and moves the motor.	• Replace valve if necessary. See section *8.4 Perform service*. • Install screen in inlet line. • Reduce inlet pressure. Observe section *4.1 Technical data*.
Cavitation (Alarm)	• Blocked / constricted / squeezed inlet line • Blocked/constricted inlet valve • Suction lift too high • Viscosity too high • Cavitation moves the motor	• Enable "SlowMode". See section *7.6 SlowMode*. • Reduce suction lift. • Increase inlet line diameter. • Check inlet line and open isolating valve if necessary.
Overheating (Alarm)	• Motor is overheated	• Reduce ambient temperature. • Stop pump until motor cools down.
Service now (Warning)	• Time interval for service expired	• Perform service. See section *8.4 Perform service*.

* Depending on setting

9.1.2 General faults

Fault	Possible cause	Possible remedy
Dosing flow too high	Inlet pressure greater than backpressure	Install additional spring-loaded valve (approx. 2 bar) on the outlet side. Check settings.
		Increase pressure differential.
	Incorrect calibration	Calibrate the pump. See section *6.5 Calibrating the pump*.
No dosing flow or dosing flow too low	Air in dosing head	Deaerate the pump.
	Faulty diaphragm	Change the diaphragm. See section *8.4 Perform service*.
	Leakage/fracture in lines	Check and repair lines.
	Valves leaking or blocked	Check and clean valves.
	Valves installed incorrectly	Check that the arrow on the valve housing is pointing in the direction of flow. Check whether all O-rings are installed correctly.
	Blocked inlet line	Clean inlet line/install strainer.
	Suction lift too high	Reduce suction lift.
		Install priming aid.
		Enable "SlowMode". See section *7.6 SlowMode*.
	Viscosity too high	Enable "SlowMode". See section *7.6 SlowMode*.
		Use lines with larger diameter.
		Install spring-loaded inlet and outlet valve.
	Faulty calibration	Calibrate the pump. See section *6.5 Calibrating the pump*.
	Deaeration valve open	Close the deaeration valve.
Irregular dosing	Valves leaking or blocked	Tighten up valves, replace valves if necessary. See section *8.4 Perform service*.
	Backpressure fluctuations	Keep backpressure constant.
		Activate "AutoFlowAdapt" (only DDA-FCM).
Liquid escaping from the drain opening on the dosing head	Faulty diaphragm	Immediately separate the pump from the power supply! Observe section *8. Service* and especially section *8.6 Diaphragm leakage*.
Liquid escaping	Dosing head screws not tightened	Tighten up screws. See section *5.2 Hydraulic connection*.
	Valves not tightened	Tighten up valves/union nuts. See section *5.2 Hydraulic connection*.
Pump not sucking in	Suction lift too high	Reduce suction lift; if necessary, provide positive inlet pressure.
	Backpressure too high	Open the deaeration valve.
	Soiled valves	Flush system, replace valves if necessary. See section *8.4 Perform service*.

10. Disposal

This product or parts of it must be disposed of in an environmentally sound way. Use appropriate waste collection services. If this is not possible, contact the nearest Grundfos company or service workshop.

See also end-of-life information at www.grundfos.com/product-recycling.

Safety declaration

Please copy, fill in and sign this sheet and attach it to the pump returned for service.

Fill in this document using English or German language.

Product type (nameplate) _____

Model number (nameplate) _____

Dosing medium _____

Fault description

Please make a circle around the damaged parts.
In the case of an electrical or functional fault, please mark the cabinet.

DDA

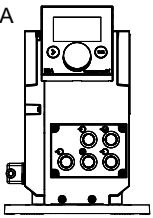

DDE

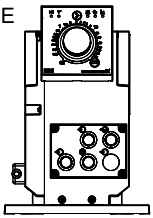

DDA / DDE

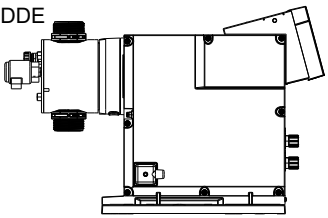

TM06 7265 3918

Please describe the error/cause of the error in brief.

_____

☐ Dosing liquid has possibly entered the pump housing.
The pump must not be connected to the power supply! Danger of explosion!

_____

We hereby declare that the pump has been cleaned and is completely free from chemical, biological and radioactive substances.

_____
Date and signature

_____
Company stamp

Argentina
Bombas GRUNDFOS de Argentina S.A.
Ruta Panamericana km. 37.500 Centro Industrial Garin
1619 - Garin Pcia. de B.A.
Phone: +54-3327 414 444
Telefax: +54-3327 45 3190

Australia
GRUNDFOS Pumps Pty. Ltd.
P.O. Box 2040
Regency Park
South Australia 5942
Phone: +61-8-8461-4611
Telefax: +61-8-8340 0155

Austria
GRUNDFOS Pumpen Vertrieb Ges.m.b.H.
Grundfosstraße 2
A-5082 Grödig/Salzburg
Tel.: +43-6246-883-0
Telefax: +43-6246-883-30

Belgium
N.V. GRUNDFOS Bellux S.A.
Boomsesteenweg 81-83
B-2630 Aartselaar
Tél.: +32-3-870 7300
Télécopie: +32-3-870 7301

Belarus
Представительство ГРУНДФОС в Минске
220125, Минск
ул. Шафарнянская, 11, оф. 56, БЦ «Порт»
Тел.: +7 (375 17) 286 39 72/73
Факс: +7 (375 17) 286 39 71
E-mail: minsk@grundfos.com

Bosnia and Herzegovina
GRUNDFOS Sarajevo
Zmaja od Bosne 7-7A,
BH-71000 Sarajevo
Phone: +387 33 592 480
Telefax: +387 33 590 465
www.ba.grundfos.com
e-mail: grundfos@bih.net.ba

Brazil
BOMBAS GRUNDFOS DO BRASIL
Av. Humberto de Alencar Castelo Branco, 630
CEP 09850 - 300
São Bernardo do Campo - SP
Phone: +55-11 4393 5533
Telefax: +55-11 4343 5015

Bulgaria
Grundfos Bulgaria EOOD
Slatina District
Iztochna Tangenta street no. 100
BG - 1592 Sofia
Tel. +359 2 49 22 200
Fax. +359 2 49 22 201
email: bulgaria@grundfos.bg

Canada
GRUNDFOS Canada Inc.
2941 Brighton Road
Oakville, Ontario
L6H 6C9
Phone: +1-905 829 9533
Telefax: +1-905 829 9512

China
Grundfos Alldos Dosing & Disinfection
ALLDOS (Shanghai) Water Technology Co. Ltd.
West Unit, 1 Floor, No. 2 Building (T 4-2)
278 Jinhu Road, Jin Qiao Export Processing Zone
Pudong New Area
Shanghai, 201206
Phone: +86 21 5055 1012
Telefax: +86 21 5032 0596
E-mail:
grundfosalldos-CN@grundfos.com

China
GRUNDFOS Pumps (Shanghai) Co. Ltd.
10F The Hub, No. 33 Suhong Road
Minhang District
Shanghai 201106
PRC
Phone: +86-21 6122 5222
Telefax: +86-21 6122 5333

COLOMBIA
GRUNDFOS Colombia S.A.S.
Km 1.5 vía Siberia-Cota Conj. Potrero Chico,
Parque Empresarial Arcos de Cota Bod. 1A.
Cota, Cundinamarca
Phone: +57(1)-2913444
Telefax: +57(1)-8764586

Croatia
GRUNDFOS CROATIA d.o.o.
Buzinski prilaz 38, Buzin
HR-10010 Zagreb
Phone: +385 1 6595 400
Telefax: +385 1 6595 499
www.hr.grundfos.com

GRUNDFOS Sales Czechia and Slovakia s.r.o.
Čapkovského 21
779 00 Olomouc
Phone: +420-585-716 111

Denmark
GRUNDFOS DK A/S
Martin Bachs Vej 3
DK-8850 Bjerringbro
Tlf.: +45-87 50 50 50
Telefax: +45-87 50 51 51
E-mail: info_GDK@grundfos.com
www.grundfos.com/DK

Estonia
GRUNDFOS Pumps Eesti OÜ
Peterburi tee 92G
11415 Tallinn
Tel: + 372 606 1690
Fax: + 372 606 1691

Finland
OY GRUNDFOS Pumput AB
Trukkikuja 1
FI-01360 Vantaa
Phone: +358-(0)207 889 500

France
Pompes GRUNDFOS Distribution S.A.
Parc d'Activités de Chesnes
57, rue de Malacombe
F-38290 St. Quentin Fallavier (Lyon)
Tél.: +33-4 74 82 15 15
Télécopie: +33-4 74 94 10 51

Germany
GRUNDFOS Water Treatment GmbH
Reetzstraße 85
D-76327 Pfinztal (Söllingen)
Tel.: +49 7240 61-0
Telefax: +49 7240 61-177
E-mail: gwt@grundfos.com

Germany
GRUNDFOS GMBH
Schlüterstr. 33
40699 Erkrath
Tel.: +49-(0) 211 929 69-0
Telefax: +49-(0) 211 929 69-3799
E-mail: infoservice@grundfos.de
Service in Deutschland:
E-mail: kundendienst@grundfos.de

Greece
GRUNDFOS Hellas A.E.B.E.
20th km. Athinon-Markopoulou Av.
P.O. Box 71
GR-19002 Peania
Phone: +0030-210-66 83 400
Telefax: +0030-210-66 46 273

Hong Kong
GRUNDFOS Pumps (Hong Kong) Ltd.
Unit 1, Ground floor
Siu Wai Industrial Centre
29-33 Wing Hong Street &
68 King Lam Street, Cheung Sha Wan
Kowloon
Phone: +852-27861706 / 27861741
Telefax: +852-27858664

Hungary
GRUNDFOS Hungária Kft.
Tópark u. 8
H-2045 Törökbálint,
Phone: +36-23 511 110
Telefax: +36-23 511 111

India
GRUNDFOS Pumps India Private Limited
118 Old Mahabalipuram Road
Thoraipakkam
Chennai 600 097
Phone: +91-44 4596 6800

Indonesia
PT. GRUNDFOS POMPA
Graha Intirub Lt. 2 & 3
Jln. Cililitan Besar No.454. Makasar, Jakarta Timur
ID-Jakarta 13650
Phone: +62 21-469-51900
Telefax: +62 21-460 6910 / 460 6901

Ireland
GRUNDFOS (Ireland) Ltd.
Unit A, Merrywell Business Park
Ballymount Road Lower
Dublin 12
Phone: +353-1-4089 800
Telefax: +353-1-4089 830

Italy
GRUNDFOS Pompe Italia S.r.l.
Via Gran Sasso 4
I-20060 Truccazzano (Milano)
Tel.: +39-02-95838112
Telefax: +39-02-95309290 / 95838461

Japan
GRUNDFOS Pumps K.K.
1-2-3, Shin-Miyakoda, Kita-ku
Hamamatsu
431-2103 Japan
Phone: +81 53 428 4760
Telefax: +81 53 428 5005

Korea
GRUNDFOS Pumps Korea Ltd.
6th Floor, Aju Building 679-5
Yeoksam-dong, Kangnam-ku, 135-916
Seoul, Korea
Phone: +82-2-5317 600
Telefax: +82-2-5633 725

Latvia
SIA GRUNDFOS Pumps Latvia
Deglava biznesa centrs
Augusta Deglava ielā 60, LV-1035, Rīga,
Tālr.: + 371 714 9640, 7 149 641
Fakss: + 371 914 9646

Lithuania
GRUNDFOS Pumps UAB
Smolensko g. 6
LT-03201 Vilnius
Tel: + 370 52 395 430
Fax: + 370 52 395 431

Malaysia
GRUNDFOS Pumps Sdn. Bhd.
7 Jalan Peguam U1/25
Glenmarie Industrial Park
40150 Shah Alam
Selangor
Phone: +60-3-5569 2922
Telefax: +60-3-5569 2866

Mexico
Bombas GRUNDFOS de México S.A. de C.V.
Boulevard TLC No. 15
Parque Industrial Stiva Aeropuerto
Apodaca, N.L. 66600
Phone: +52-81-8144 4000
Telefax: +52-81-8144 4010

Netherlands
GRUNDFOS Netherlands
Veluwezoom 35
1326 AE Almere
Postbus 22015
1302 CA ALMERE
Tel.: +31-88-478 6336
Telefax: +31-88-478 6332
E-mail: info_gnl@grundfos.com

New Zealand
GRUNDFOS Pumps NZ Ltd.
17 Beatrice Tinsley Crescent
North Harbour Industrial Estate
Albany, Auckland
Phone: +64-9-415 3240
Telefax: +64-9-415 3250

Norway
GRUNDFOS Pumper A/S
Strømsveien 344
Postboks 235, Leirdal
N-1011 Oslo
Tlf.: +47-22 90 47 00
Telefax: +47-22 32 21 50

Poland
GRUNDFOS Pompy Sp. z o.o.
ul. Klonowa 23
Baranowo k. Poznania
PL-62-081 Przeźmierowo
Tel: (+48-61) 650 13 00
Fax: (+48-61) 650 13 50

Portugal
Bombas GRUNDFOS Portugal, S.A.
Rua Calvet de Magalhães, 241
Apartado 1079
P-2770-153 Paço de Arcos
Tel.: +351-21-440 76 00
Telefax: +351-21-440 76 90

Romania
GRUNDFOS Pompe România SRL
Bd. Biruintei, nr 103
Pantelimon county Ilfov
Phone: +40 21 200 4100
Telefax: +40 21 200 4101
E-mail: romania@grundfos.ro

Russia
ООО Грундфос Россия
ул. Школьная, 39-41
Москва, RU-109544, Russia
Тел. (+7) 495 564-88-00 (495)
737-30-00
Факс (+7) 495 564 8811
E-mail grundfos.moscow@grundfos.com

Serbia
Grundfos Srbija d.o.o.
Omladinskih brigada 90b
11070 Novi Beograd
Phone: +381 11 2258 740
Telefax: +381 11 2281 769
www.rs.grundfos.com

Singapore
GRUNDFOS (Singapore) Pte. Ltd.
25 Jalan Tukang
Singapore 619264
Phone: +65-6681 9688
Telefax: +65-6681 9689

Slovakia
GRUNDFOS s.r.o.
Prievozská 4D
821 09 BRATISLAVA
Phona: +421 2 5020 1426
sk.grundfos.com

Slovenia
GRUNDFOS LJUBLJANA, d.o.o.
Leskoškova 9e, 1122 Ljubljana
Phone: +386 (0) 1 568 06 10
Telefax: +386 (0)1 568 0619
E-mail: tehnika-si@grundfos.com

South Africa
Grundfos (PTY) Ltd.
16 Lascelles Drive, Meadowbrook Estate
1609 Germiston, Johannesburg
Tel.: (+27) 10 248 6000
Fax: (+27) 10 248 6002
E-mail: lgradidge@grundfos.com

Spain
Bombas GRUNDFOS España S.A.
Camino de la Fuentecilla, s/n
E-28110 Algete (Madrid)
Tel.: +34-91-848 8800
Telefax: +34-91-628 0465

Sweden
GRUNDFOS AB
Box 333 (Lunnagårdsgatan 6)
431 24 Mölndal
Tel.: +46 31 332 23 000
Telefax: +46 31 331 94 60

Switzerland
GRUNDFOS Pumpen AG
Bruggacherstrasse 10
CH-8117 Fällanden/ZH
Tel.: +41-44-806 8111
Telefax: +41-44-806 8115

Taiwan
GRUNDFOS Pumps (Taiwan) Ltd.
7 Floor, 219 Min-Chuan Road
Taichung, Taiwan, R.O.C.
Phone: +886-4-2305 0868
Telefax: +886-4-2305 0878

Thailand
GRUNDFOS (Thailand) Ltd.
92 Chaloem Phrakiat Rama 9 Road,
Dokmai, Pravej, Bangkok 10250
Phone: +66-2-725 8999
Telefax: +66-2-725 8998

Turkey
GRUNDFOS POMPA San. ve Tic. Ltd. Sti.
Gebze Organize Sanayi Bölgesi
Ihsan dede Caddesi,
2. yol 200. Sokak No. 204
41490 Gebze/ Kocaeli
Phone: +90 - 262-679 7979
Telefax: +90 - 262-679 7905
E-mail: satis@grundfos.com

Ukraine
Бізнес Центр Європа
Столичне шосе, 103
м. Київ, 03131, Україна
Телефон: (+38 044) 237 04 00
Факс.: (+38 044) 237 04 01
E-mail: ukraine@grundfos.com

United Arab Emirates
GRUNDFOS Gulf Distribution
P.O. Box 16768
Jebel Ali Free Zone
Dubai
Phone: +971-4- 8815 166
Telefax: +971-4-8815 136

United Kingdom
GRUNDFOS Pumps Ltd.
Grovebury Road
Leighton Buzzard/Beds. LU7 4TL
Phone: +44-1525-850000
Telefax: +44-1525-850011

U.S.A.
GRUNDFOS Pumps Corporation
9300 Loiret Blvd.
Lenexa, Kansas 66219
Phone: +1-913-227-3400
Telefax: +1-913-227-3500

Uzbekistan
Grundfos Tashkent, Uzbekistan The Representative Office of Grundfos Kazakhstan in Uzbekistan
38a, Oybek street, Tashkent
Телефон: (+998) 71 150 3290 / 71 150 3291
Факс: (+998) 71 150 3292

Addresses revised 15.01.2019

Trademarks displayed in this material, including but not limited to Grundfos, the Grundfos logo and "be think innovate" are registered trademarks owned by The Grundfos Group. All rights reserved.

© 2019 Grundfos Holding A/S, all rights reserved.

98767821 0219

ECM: 1246835

P-0903 - Pump, Sump, Zoeller M53 Automatic Operation

Notice to installing contractor: Instructions must remain with installation.

"Quality Pumps Since 1939"

SECTION: 6.10.001
FM0447
Rev. A
1009
Supersedes
0809

Product information presented here reflects conditions at time of publication. Consult factory regarding discrepancies or inconsistencies.

MAIL TO: P.O. BOX 16347 • Louisville, KY 40256-0347
SHIP TO: 3649 Cane Run Road • Louisville, KY 40211-1961
(502) 778-2731 • 1 (800) 928-PUMP • FAX (502) 774-3624

visit our web site:
www.zoeller.com

NOTICE: VENT HOLE FOR CHECK VALVE SEE #3 IN CAUTION SECTION BELOW AND #4 ON PAGE 3

INSTALLATION INSTRUCTIONS
RECOMMENDED MODELS

DATE INSTALLED:
MODEL NUMBER:

EFFLUENT*/SUMP/DEWATERING	SEWAGE
49, 50 Series, 70 Series, 98 Series	211 Series, 264 Series
130 Series, 140/4140, 145/4145 Series, 150 Series, 160/4160 Series	260 Series, 270/4270 Series
180/4180 Series, 191, 371, 372, 373	280/4280 Series, 290/4290 Series

P/N 006355

*Effluent systems should specify that pumps should not handle solids exceeding three fourths inch (¾") in order to prevent large solids from entering leeching fields, mound systems etc. (Model 49 and 70 Series have 3/8" solids capability, 50, 90, 140, 145/4145, 151, 371 and 372 Series have ½", 130 Series has 5/8", 152,153, and 160/4160/180/4180, 373 Series have ¾".) Where codes permit, sewage pumps can be used for effluent systems. Nonautomatic pump(s) with external level control recommended for septic tank effluent applications.

PREINSTALLATION CHECKLIST - ALL INSTALLATIONS

1. Inspect your pump. Occasionally, products are damaged during shipment. If the unit is damaged, contact your dealer before using. DO NOT remove the test plugs in the cover nor the motor housing.
2. Carefully read the literature provided to familiarize yourself with specific details regarding installation and use. These materials should be retained for future reference.

⚠ WARNING — SEE BELOW FOR LIST OF WARNINGS

1. Make certain that the receptacle is within the reach of the pump's power supply cord. DO NOT USE AN EXTENSION CORD. Extension cords that are too long or too light do not deliver sufficient voltage to the pump motor. But, more important, they could present a safety hazard if the insulation were to become damaged or the connection end were to fall into the sump.
2. Make sure the pump electrical supply circuit is equipped with fuses or circuit breakers of proper capacity. A separate branch circuit is recommended, sized according to the "National Electrical Code" for the current shown on the pump nameplate.
3. Testing for ground. As a safety measure, each electrical outlet should be checked for ground using an Underwriters Laboratory Listed circuit analyzer which will indicate if the power, neutral and ground wires are correctly connected to your outlet. If they are not, call a qualified licensed electrician.
4. For Added Safety. Pumping and other equipment with a 3-prong grounded plug must be connected to a 3-prong grounded receptacle. For added safety the receptacle may be protected with a ground-fault circuit interrupter. When a pump needs to be connected in a watertight junction box, the plug can be removed and spliced to the supply cable with proper grounding. For added safety this circuit may be protected by a ground-fault circuit interrupter. The complete installation must comply with the National Electrical Code and all applicable local codes and ordinances.
5. FOR YOUR PROTECTION, ALWAYS DISCONNECT PUMP FROM ITS POWER SOURCE BEFORE HANDLING. Single phase pumps are supplied with a 3-prong grounded plug to help protect you against the possibility of electrical shock. DO NOT UNDER ANY CIRCUMSTANCES REMOVE THE GROUND PIN. The 3-prong plug must be inserted into a mating 3-prong grounded receptacle. If the installation does not have such a receptacle, it must be changed to the proper type, wired and grounded in accordance with the National Electrical Code and all applicable local codes and ordinances. Three phase pumps require motor starting devices with motor overload protection. See FM0486 for duplex installations.
6. The tank is to be vented in accordance with local plumbing code. Pumps must be installed in accordance with the National Electrical Code and all applicable local codes and ordinances. Pumps are not to be installed in locations classified as hazardous in accordance with National Electrical Code, ANSI/NFPA 70.
7. "Risk of electrical shock" Do not remove power supply cord and strain relief or connect conduit directly to the pump.
8. Installation and servicing of electrical circuits and hardware should be performed by a qualified licensed electrician.
9. Pump installation and servicing should be performed by a qualified person.
10. Risk of electric shock - These pumps have not been investigated for use in swimming pool and marine areas.
11. According to the state of California (Prop 65), this product contains chemicals known to the state of California to cause cancer and birth defects or other reproductive harm.

⚠ CAUTION — SEE BELOW FOR LIST OF CAUTIONS

1. Check to be sure your power source is capable of handling the voltage requirements of the motor, as indicated on the pump name plate.
2. The installation of automatic pumps with variable level float switches or nonautomatic pumps using auxiliary variable level float switches is the responsibility of the installing party and care should be taken that the tethered float switch will not hang up on the pump apparatus or pit peculiarities and is secured so that the pump will shut off. It is recommended to use rigid piping and fittings and the pit be 18" or larger in diameter.
3. Information - vent hole purpose. It is necessary that all submersible sump, effluent, and sewage pumps capable of handling various sizes of solid waste be of the bottom intake design to reduce clogging and seal failures. If a check valve is incorporated in the installation, a vent hole (approx. 3/16") must be drilled in the discharge pipe below the check valve and pit cover to purge the unit of trapped air. Trapped air is caused by agitation and/or a dry basin. Vent hole should be checked periodically for clogging. The 50 or 90 Series pumps have a vent located in the pump housing opposite the float, adjacent to a housing lug, but an additional vent hole is recommended. The vent hole on a High Head application may cause too much turbulence. You may not want to drill one. If you choose not to drill a vent hole, be sure the pump case and impeller is covered with liquid before connecting the pipe to the check valve and no inlet carries air to the pump intake. NOTE: THE HOLE MUST ALSO BE BELOW THE BASIN COVER AND CLEANED PERIODICALLY. Water stream will be visible from this hole during pump run periods.
4. Pump should be checked frequently for debris and/or build up which may interfere with the float "on" or "off" position. Repair and service should be performed by Zoeller Pump Company Authorized Service Station only.
5. Dewatering and effluent sump pumps are not designed for use in pits handling raw sewage.
6. Maximum operating temperature for standard model pumps must not exceed 130°F (54°C). Model 49 max. temperature must not exceed 104ºF (40ºC). The 70 and 211 Series max. temperature must not exceed 110ºF (43ºC).
7. Pump models 188/4188, 189/4189, and 295/4295 nonautomatic pump must run totally submerged and CSA certified pumps must be operated submerged with "off - on" level controls.
8. Pump models 266, 267, 268, 137 and 139 must be operated in an upright position. Do not attempt to start pump when tilted or laying on its side.
9. Do not operate a pump in an application where the Total Dynamic Head is less than the minimum Total Dynamic Head listed on the Pump Performance Curves.
10. Model 49 is for indoor use only.

NOTE: Pumps with the "UL" mark and pumps with the "US" mark are tested to UL Standard UL778. CSA Certified pumps are certified to CSA Standard C22.2 No. 108.

REFER TO WARRANTY ON PAGE 2.

© Copyright 2009 Zoeller Co. All rights reserved.

Limited Warranty

Manufacturer warrants, to the purchaser and subsequent owner during the warranty period, every new product to be free from defects in material and workmanship under normal use and service, when properly used and maintained, for a period of one year from date of purchase by the end user, or 18 months from date of original manufacture of the product, whichever comes first. Parts that fail within the warranty period, one year from date of purchase by the end user, or 18 months from the date of original manufacture of the product, whichever comes first, that inspections determine to be defective in material or workmanship, will be repaired, replaced or remanufactured at Manufacturer's option, provided however, that by so doing we will not be obligated to replace an entire assembly, the entire mechanism or the complete unit. No allowance will be made for shipping charges, damages, labor or other charges that may occur due to product failure, repair or replacement.

This warranty does not apply to and there shall be no warranty for any material or product that has been disassembled without prior approval of Manufacturer, subjected to misuse, misapplication, neglect, alteration, accident or act of God; that has not been installed, operated or maintained in accordance with Manufacturer's installation instructions; that has been exposed to outside substances including but not limited to the following: sand, gravel, cement, mud, tar, hydrocarbons, hydrocarbon derivatives (oil, gasoline, solvents, etc.), or other abrasive or corrosive substances, wash towels or feminine sanitary products, etc. in all pumping applications. The warranty set out in the paragraph above is in lieu of all other warranties expressed or implied; and we do not authorize any representative or other person to assume for us any other liability in connection with our products.

Contact Manufacturer at, 3649 Cane Run Road, Louisville, Kentucky 40211, Attention: Customer Service Department to obtain any needed repair or replacement of part(s) or additional information pertaining to our warranty.

MANUFACTURER EXPRESSLY DISCLAIMS LIABILITY FOR SPECIAL, CONSEQUENTIAL OR INCIDENTAL DAMAGES OR BREACH OF EXPRESSED OR IMPLIED WARRANTY; AND ANY IMPLIED WARRANTY OF FITNESS FOR A PARTICULAR PURPOSE AND OF MERCHANTABILITY SHALL BE LIMITED TO THE DURATION OF THE EXPRESSED WARRANTY.

Some states do not allow limitations on the duration of an implied warranty, so the above limitation may not apply to you. Some states do not allow the exclusion or limitation of incidental or consequential damages, so the above limitation or exclusion may not apply to you.

This warranty gives you specific legal rights and you may also have other rights which vary from state to state.

In those instances where damages are incurred as a result of an alleged pump failure, the Homeowner must retain possession of the pump for investigation purposes.

EASY DO'S & DON'T'S FOR INSTALLING A SUMP PUMP

1. DO read thoroughly all installation material provided with the pump.
2. DO inspect pump for any visible damage caused by shipping. Contact dealer if pump appears to be damaged.
3. DO clean all debris from the sump. Be sure that the pump will have a hard, flat surface beneath it. DO NOT install on sand, gravel or dirt.
4. DO be sure that the sump is large enough to allow proper clearance for the level control switch(es) to operate properly.
5. DO Always Disconnect Pump From Power Source Before Handling.
   DO always connect to a separately protected and properly grounded circuit.
   DO NOT ever cut, splice, or damage power cord (Only splice in a watertight junction box).
   DO NOT carry or lift pump by its power cord.
   DO NOT use an extension cord with a sump pump.
6. DO install a check valve and a union in the discharge line.
   DO NOT use a discharge pipe smaller than the pump discharge.
7. DO NOT use a sump pump as a trench or excavation pump, or for pumping sewage, gasoline, or other hazardous liquids.
8. DO test pump immediately after installation to be sure that the system is working properly.
9. DO cover sump with an adequate sump cover.
10. DO review all applicable local and national codes and verify that the installation conforms to each of them.
11. DO consult manufacturer for clarifications or questions.
12. DO consider a two pump system with an alarm where an installation may become overloaded or primary pump failure would result in property damages.
13. DO consider a D.C. Backup System where a sump or dewatering pump is necessary for the prevention of property damages from flooding due to A.C. power disruptions, mechanical or electrical problems or system overloading.
14. DO inspect and test system for proper operations at least every three months.

SERVICE CHECKLIST

⚠ WARNING ELECTRICAL PRECAUTIONS- Before servicing a pump, always shut off the main power breaker and then unplug the pump - making sure you are wearing insulated protective sole shoes and not standing in water. Under flooded conditions, contact your local electric company or a qualified licensed electrician for disconnecting electrical service prior to pump removal.

⚠ WARNING Submersible pumps contain oils which becomes pressurized and hot under operating conditions - allow 2½ hours after disconnecting before attempting service.

CONDITION	COMMON CAUSES
A. Pump will not start or run.	Check fuse, low voltage, overload open, open or incorrect wiring, open switch, impeller or seal bound mechanically, defective capacitor or relay when used, motor or wiring shorted. Float assembly held down. Switch defective, damaged, or out of adjustment.
B. Motor overheats and trips overload or blows fuse.	Incorrect voltage, negative head (discharge open lower than normal) impeller or seal bound mechanically, defective capacitor or relay, motor shorted.
C. Pump starts and stops too often.	Float tight on rod, check valve stuck or none installed in long distance line, overload open, level switch(s) defective, sump pit too small.
D. Pump will not shut off.	Debris under float assembly, float or float rod bound by pit sides or other, switch defective, damaged or out of adjustment.
E. Pump operates but delivers little or no water.	Check strainer housing, discharge pipe, or if check valve is used vent hole must be clear. Discharge head exceeds pump capacity. Low or incorrect voltage. Incorrect motor rotation. Capacitor defective. Incoming water containing air or causing air to enter pumping chamber.
F. Drop in head and/or capacity after a period of use.	Increased pipe friction, clogged line or check valve. Abrasive material and adverse chemicals could possibly deteriorate impeller and pump housing. Check line. Remove base and inspect.

If the above checklist does not uncover the problem, consult the factory - Do not attempt to service or otherwise disassemble pump. Service must be performed by Zoeller Authorized Service Stations. Go to www.zoeller.com/zcopump/TechSupport/authsslisting.htm to find the Authorized Service Station in your area.

© Copyright 2009 Zoeller Co. All rights reserved.

RECOMMENDED INSTALLATION FOR ALL APPLICATIONS

(1) Electrical wiring and protection must be in accordance with National Electrical Code and any other applicable state and local electrical requirements.
(2) Install proper Zoeller unicheck (combination union and check valve), preferably just above the basin to allow easy removal of the pump for cleaning or repair. On sewage, effluent or dewatering, if high head or below cover installation is required use 30-0164 on 1½" pipe, 30-0152 on 2" pipe and 30-0160 on 3" pipe. See (4) below.
(3) All installations require a basin cover to prevent debris from falling into the basin and to prevent accidental injury.
(4) When a Unicheck is installed, drill a 3/16" dia. hole in the discharge pipe even with the top of the pump. *NOTE: THE HOLE MUST ALSO BE BELOW THE BASIN COVER AND CLEANED PERIODICALLY.* (High Head unit see #3 under "Caution" on front page). Water stream will be visible from this hole during pump run periods.
(5) Securely tape or clamp power cord to discharge pipe, clear of the float mechanism(s).
(6) Use full-size discharge pipe.
(7) Basin must be in accordance with applicable codes and specifications.
(8) Pump must be level and float mechanism(s) clear of sides of basin before starting pump.
(9) Basin must be clean and free of debris after installation.
(10) Gate Valve or Ball Valve to be supplied by installer and installed according to any and all codes.
(11) Locate float switches as shown in sketches. The best place for the "off" point is above the motor housing and positioned 180° from the inlet. Never put "off" point below discharge on pump (Sewage & Effluent only). *NOTE: FOR AUTOMATIC PUMPS, USE DEWATERING INSTALLATION SKETCH.*
(12) Gas tight seals required to contain gases and odors.
(13) Vent gases and odors to the atmosphere through vent pipe (Sewage & Dewatering only).
(14) Install Zoeller Pump Stand (Model 10-2421) under pump to provide a settling basin. (Effluent & Dewatering only.)

For Effluent Only:

(15) Wire pump to power through a Zoeller watertight junction box or watertight splice. *NOTE: Watertight enclosure is a must in damp areas. See No. 8 on front page of FM0732.*
(16) Refer to SSPMA Effluent Sizing Manual for determining "on" - "off" switches.
(17) Septic tank risers must be used for easy pump and filter access.

NOTE: Double seal pumps offer extra protection from damage caused by seal failure.

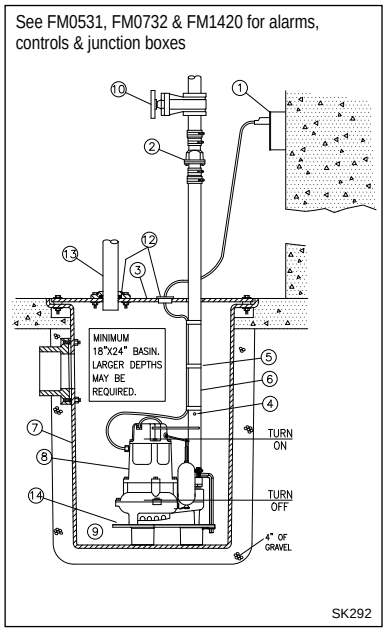

TYPICAL DEWATERING INSTALLATION

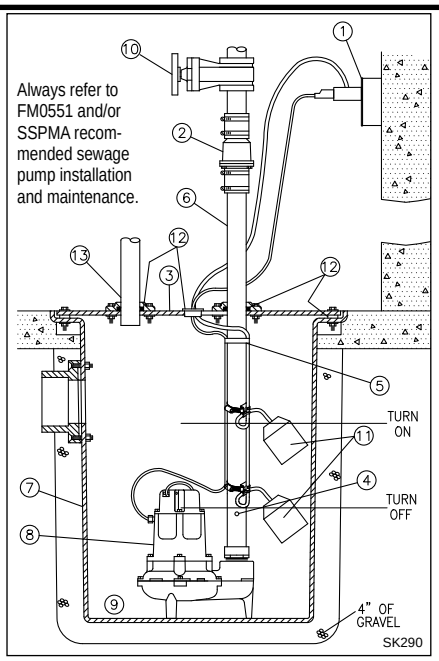

TYPICAL SEWAGE INSTALLATION

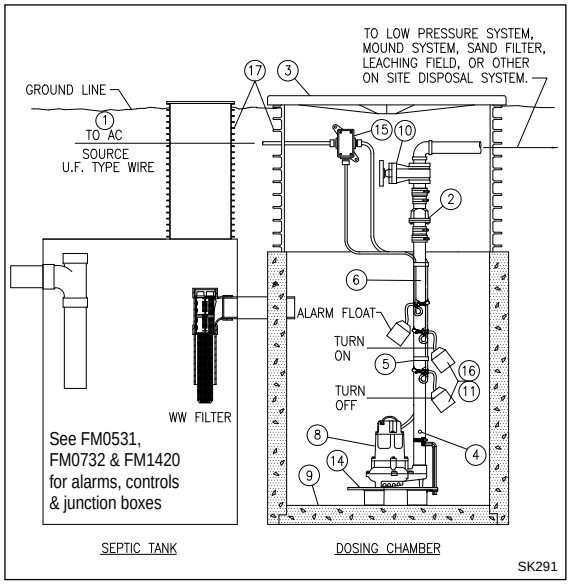

TYPICAL EFFLUENT INSTALLATION

All installations must comply with all applicable electrical and plumbing codes, including, but not limited to, National Electrical Code, local, regional, and/or state plumbing codes, etc. Not intended for use in hazardous locations.

SUGGESTED METHODS OF FLOAT INSTALLATION

On some installations it may be desirable to install an independent hanger for the level control switches to avoid possible hang ups on the pumps, piping, valves, etc. Float hangers are available from Zoeller Company on Catalog Sheet FM0526 or can be fabricated from standard pipe and fittings.

TYPICAL FLOAT HANGER ON STEEL COVER PITS

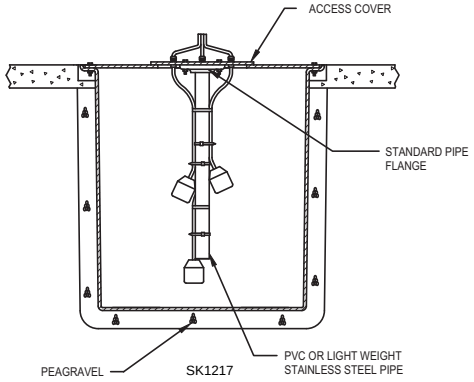

TYPICAL FLOAT HANGER ON CONCRETE PITS OR SEPTIC TANK RISERS

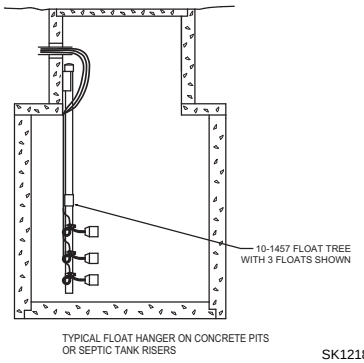

© Copyright 2009 Zoeller Co. All rights reserved.

WD & WH MODEL INSTALLATION

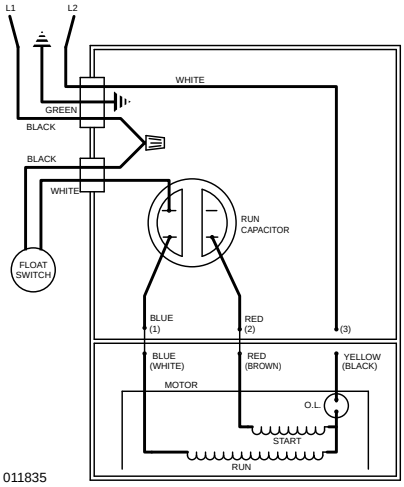

011835

WIRING DIAGRAM FOR MODELS
WD - 230V, 1 Ph, 60 Hz.
WH - 200/208V, 1 Ph, 60 Hz.

Determining Pumping Range in Inches (1 inch - 2.5 cm)

Tether Length	5 min.	10	15	20	22 max.
Pumping Range	9	13.5	18	22	24

Use only as a guide. Due to weight of cable, pumping range above horizontal is not equal to pumping range below horizontal. Ranges are based on testing in nonturbulent conditions. Range may vary due to water temperature and cord shape. As tether length increases, so does the variance of the pumping range.

Models WD & WH are fully automatic. A float switch is included and factory wired in the pump circuit to provide automatic operation once the float switch is secured properly to the outlet pipe. Use the diagram above to secure the float switch properly and obtain the proper tether to customize the on-off cycle to each application.

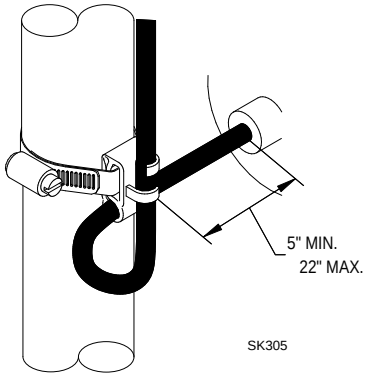

20 AMP SWITCH (WD & WH MODELS)

Note: Failure to keep within proper tether limits may prevent reliable switch operation.

Note: Cable must be mounted in horizontal position.

SINGLE PHASE WIRING INSTRUCTIONS

⚠ WARNING FOR YOUR PROTECTION, ALWAYS DISCONNECT PUMP FROM ITS POWER SOURCE BEFORE HANDLING. Single phase pumps are supplied with a 3-prong grounded plug to help protect you against the possibility of electrical shock. DO NOT UNDER ANY CIRCUMSTANCES REMOVE THE GROUND PIN. The 3-prong plug must be inserted into a mating 3-prong grounded receptacle. If the installation does not have such a receptacle, it must be changed to the proper type, wired and grounded in accordance with the National Electrical Code and all applicable local codes and ordinances.

⚠ WARNING "Risk of electrical shock" Do not remove power supply cord and strain relief or connect conduit directly to the pump.

⚠ WARNING Installation and checking of electrical circuits and hardware should be performed by a qualified licensed electrician.

⚠ WARNING Units supplied without a plug (single and three phase) and single phase nonautomatic units with a 20 amp plug must have a motor control and liquid level control provided at time of installation. The control device should have suitable voltage, ampere, frequency, grounding and horsepower rating for the pump to which it is connected.

THREE PHASE WIRING INSTRUCTIONS

⚠ WARNING FOR YOUR PROTECTION, ALWAYS DISCONNECT PUMP FROM ITS POWER SOURCE BEFORE HANDLING.

To automatically operate a nonautomatic three phase pump, a control panel is required. Follow the instructions provided with the panel to wire the system. For automatic three phase pumps see automatic 3 phase wiring diagram located to the far right.

Before installing a pump, check the pump rotation to ensure that wiring has been connected properly to power source, and that the green lead of power cord (See wiring diagram), is connected to a valid ground. Momentarily energize the pump, observing the directions of kick back due to starting torque. Rotation is correct if kick back is in the opposite direction of rotation arrow on the pump casing. If rotation is not correct, switching of any two power leads other than ground, should provide the proper rotation.

All three phase pumps require motor starting devices with motor overload protection. See FM0486 for duplex installations. Pumps must be installed in accordance with the National Electrical Code and all applicable local codes and ordinances. Pumps are not to be installed in locations classified as hazardous in accordance with National Electrical Code, ANSI/NFPA 70.

NONAUTOMATIC 3 PHASE

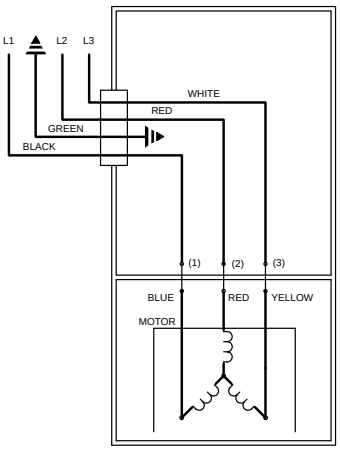

006848

AUTOMATIC 3 PHASE

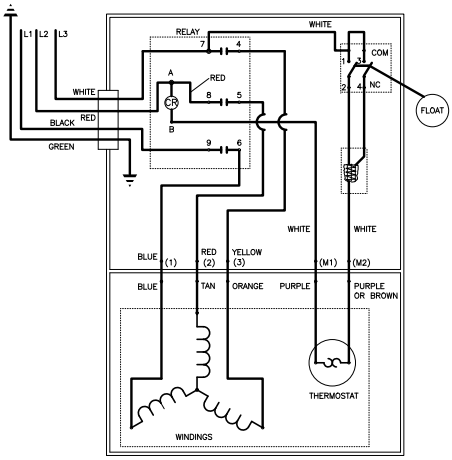

013071

IMPORTANT NOTICE: Some insurance policies, both commercial and residential, extend coverage for damages incurred by product failure. You will need to have possession of the product to support your claim in most cases. Zoeller Pump Co. will exchange the unit or refund the original purchase price once the claim is settled with the insurer in the case where you need to retain possession of the product to support a damage claim you submit to your insurance company.

© Copyright 2009 Zoeller Co. All rights reserved.

"Quality Pumps Since 1939"

Product information presented here reflects conditions at time of publication. Consult factory regarding discrepancies or inconsistencies.

ZOELLER® PUMP CO.

MAIL TO: *P.O. BOX 16347 • Louisville, KY 40256-0347*
SHIP TO: *3649 Cane Run Road • Louisville, KY 40211-1961*
(502) 778-2731 • 1 (800) 928-PUMP • FAX (502) 774-3624

visit our web site:
www.zoeller.com

SECTION: 6.10.160
FM0472
0406
Supersedes
0801

REPLACEMENT PARTS LIST FOR MODELS:

M53 AUTOMATIC 115V
D53 AUTOMATIC 230V
N53 AUTOMATIC 115V
E53 NONAUTOMATIC 230V

Consult factory for all other models

TO ORDER REPLACEMENT PARTS:

PLEASE FURNISH THE FOLLOWING INFORMATION:

- Model Number.
- Part Number of Pump.
  (If manufactured prior to June 1988, give 2 letter data code following Model No.)
- Part Number and Description of part.

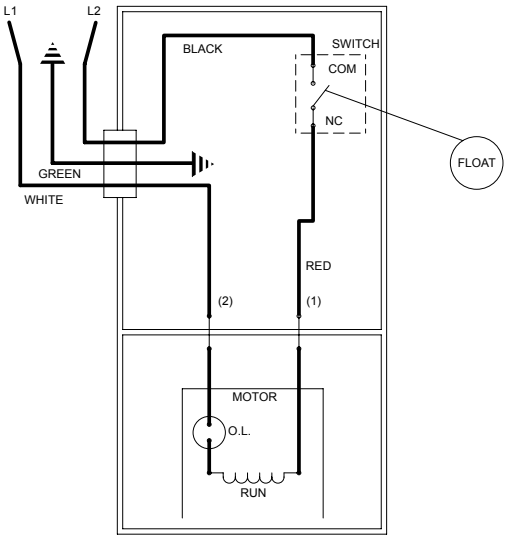

002385

WIRING DIAGRAM FOR MODELS
"M53-A" and "D53-A"
9/81 (VM) thru 8/86 (US)

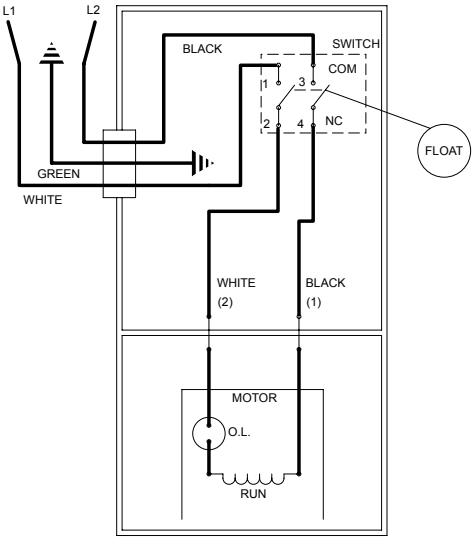

004619

WIRING DIAGRAM FOR MODELS
"M53-B", "M53-C" and "M53-D"
"D53-B", "D53-C", and "D53-D"
9/86 (VS) thru Current

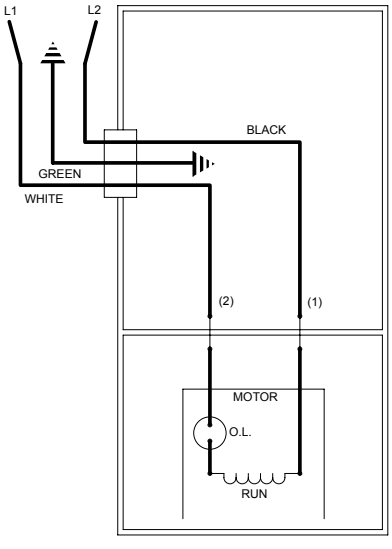

002392A

WIRING DIAGRAM FOR MODELS
"N53-A", "N53-B" and "N53-C"
"E53-A", "E53-B", and "E53-C"
9/81 (VM) thru Current

© Copyright 2006 Zoeller Co. All rights reserved.

REPLACEMENT PARTS LIST FOR MODELS “M53” and “D53”.

See back page for illustration.

				MODELS:	M53-A	M53-B	M53-C	M53-D		D53-A	D53-B	D53-C	D53-D
REF NO.	DESCRIPTION	QTY	NOTES		9/81 VM thru 8/86 US	9/86 VS thru 8/87 UT	9/87 VT thru 6/92	7/92 thru Current		9/81 VM thru 8/86 US	9/86 VS thru 8/87 UT	9/87 VT thru 6/92	7/92 thru Current
1	• Gasket,Case/Cover	1			034046	034046	034046	034046		034046	034046	034046	034046
2	• Clamp,Strain Relief-Red	1			001770	001770	001770	001770		001770	001770	001770	001770
3	• Seal,Cord-Asm “60”	1			002326	004322	004322	004322		002326	004322	004322	004322
4	Cord Term & Seal 115V/A	1	1,3		002321	004700	004700	004700		002320	004707	004707	004707
5	Stator 115V/1Ph GE	1	2		054040	054040	054040	007951		054050	054050	054050	007952
	Stator 115V/1Ph Emerson				002473	002473	002473	007953		005530	005530	005530	007954
6	• Screw,#8-32 X 2.563 RHPl-Stlbo	2			001914	001914	001914	001914		001914	001914	001914	001914
7	Rotor Asm 115V/1Ph GE	1	2		054032	054032	054032	054032		054032	054032	054032	054032
	Rotor Asm 115/230V/1Ph Emerson				003735	003735	003735	003735		003735	003735	003735	003735
8	• Seal,Mtr Hsg	1			034007	034007	034007	034007		034007	034007	034007	034007
9	• Washer,Trst-Nyl.875X.504X.050”	1			002140	002140	002140	002140		002140	002140	002140	002140
10	• Oil,Dielectric-(15.5 Oz Can)	1			057022	057022	057022	057022		057022	057022	057022	057022
11	Housing,Pump-Mach	1			057018	057018	057018	057018		057018	057018	057018	057018
12	• Seal Asm,Shaft-Blister Pak	1			267027	267027	267027	267027		267027	267027	267027	267027
13	Impeller-Plas 53	1			003644	003644	003644	003644		003644	003644	003644	003644
14	Base Asm	1			002690	002690	002690	002690		002690	002690	002690	002690
15	Plate,Strainer-Plastic	1			001082	001082	NA	NA		001082	001082	NA	NA
16	Case Handle & Arm Asm “50”	1	3,6		054092	004703	004703	004703		054093	004703	004703	004703
17	• Plug,Test-White	2			034090	034090	034090	034090		034090	034090	034090	034090
18	• Arm & Seal Asm “50”	1	3		054080	004704	004704	004704		054080	004704	004704	004704
19	Case & Switch “50”	1	3,6,7		054051	004702	004702	004702		054053	004702	004702	004702
20	Guard “50/1050”	1	3		034016	004617	004617	004617		034016	004617	004617	004617
21	• Seal,Thru Wall Term	2			003402	003402	003402	003402		003402	003402	003402	003402
22	Housing,Mtr-& Term Asm “50”	1			003177	004712	004712	004712		003177	004712	004712	004712
23	Float-Polypropylene	1			034019	034019	034019	034019		034019	034019	034019	034019
24	Rod Asm,Flt (use 054062)	1			034087	034087	034087	034087		034087	034087	034087	034087
25	Guide Asm,Flt Rod	1			034086	034086	034086	034086		034086	034086	034086	034086
26	Switch Asm “50”	1	3		034061	004705	004705	004705		034061	004705	004705	004705
¤	Wire Asm-F-P(1)Wire Rs2.25”Lg	1			002231	NA	NA	NA		002231	NA	NA	NA
27	• Screw,#10-24 X.75 RHM-Sl SS	16			001885	001885	001885	001885		001885	001885	001885	001885
28	• Screw,#6-32x.438Rhsltp”1”Stlzi	2			001877	004644	004644	004644		001877	004644	004644	004644
29	• Screw,#6-32x.25RHM Sl Tc Stlgr	1			001877	001877	001877	001877		001877	001877	001877	001877
30	• Sem,10-12x.5HH-SlShmt Scr Tp A	3			003229	003229	NA	NA		003229	003229	NA	NA
¤	Rebuild Kit “53/1053/55”	1			003181	004706	004706	004706		003181	004706	004706	004706

• Items included in Rebuild Kit. ¤ Not Shown in Illustration. § Not sold separately.

NOTES:

1) Strain Relief (Item 2) can be purchased separately, but is included with Cord, Terminal & Seal Assembly (Item 4) and with Seal, Cord Assembly (Item 3).
2) Specify GE or Emerson Motor. GE motor can be identified by white valox insulation on stator. Emerson can be identified by green epoxy insulation on stator.
3) To insure proper replacement, customer must identify if switch is a General Electric switch.
4) See FM0160 Parts Price Sheet for listing of parts prices.
5) “NA” indicates, not applicable.
6) If an “X” follows Model No., or Date Mfg. on brass ID tag, consult factory for ordering any parts.
7) For pumps with date code prior to 9/86 the replacement case and switch will have a new style switch.

DATE CODE OF MANUFACTURE FROM 12/70 to 12/88

1st LETTER MONTH		2nd LETTER YEAR		
M — JAN.	T — JULY	A — 1971	G — 1977	O — 1983
N — FEB.	U — AUG.	B — 1972	H — 1978	P — 1984
O — MARCH	V — SEPT.	C — 1973	I — 1979	R — 1985
P — APRIL	W — OCT.	D — 1974	J — 1980	S — 1986
R — MAY	X — NOV.	E — 1975	M — 1981	T — 1987
S — JUNE	Y — DEC.	F — 1976	N — 1982	U — 1988

NOTE: Four digit (MMYY) date of mfg. used after June, 1988.
IE: MMYY = 0192 = Jan. 1992

© Copyright 2006 Zoeller Co. All rights reserved.

REPLACEMENT PARTS LIST FOR MODELS “N53” and “E53”.

See back page for illustration.

				MODELS:	N53	N53-A	N53-C	N53-C		E53	E53-A	E53-B	E53-C
REF NO.	DESCRIPTION	QTY	NOTES		9/81 VM thru 8/86 US	9/86 VS thru 8/87 UT	9/87 VT thru 6/92	7/92 thru Current		9/81 VM thru 8/86 US	9/86 VS thru 8/87 UT	9/87 VT thru 6/92	7/92 thru Current
1	• Gasket,Case/Cover	1			034046	034046	034046	034046		034046	034046	034046	034046
2	• Clamp,Strain Relief-Red	1	1		001770	001770	001770	001770		001770	001770	001770	001770
3	• Seal,Cord-Asm “60”	1	1,3		002326	004322	004322	004322		002326	004322	004322	004322
4	Cord Term & Seal 115V/Na	1	1		002319	004708	004708	004708		002318	004709	004709	004709
5	Stator 115V/1Ph GE	1	2		054040	054040	054040	007951		054050	054050	054050	007952
	Stator 115V/1Ph Emerson	1	2		002473	002473	002473	007953		005530	005530	005530	007954
6	• Screw,#8-32 X 2.563 RHPl-Stlbo	2			001914	001914	001914	001914		001914	001914	001914	001914
7	Rotor Asm 115V/1Ph GE	1	2		054032	054032	054032	054032		054032	054032	054032	054032
	Rotor Asm 115/230V/1Ph Emerson	1	2		003735	003735	003735	003735		003735	003735	003735	003735
8	• Seal,Mtr Hsg	1			034007	034007	034007	034007		034007	034007	034007	034007
9	• Washer,Trst-Nyl.875X.504X.050”	1			002140	002140	002140	002140		002140	002140	002140	002140
10	• Oil,Dielectric-(15.5 Oz Can)	1			057022	057022	057022	057022		057022	057022	057022	057022
11	Housing,Pump-Mach	1			057018	057018	057018	057018		057018	057018	057018	057018
12	• Seal Asm,Shaft-Blister Pak	1			267027	267027	267027	267027		267027	267027	267027	267027
13	Impeller-Plas 53	1			003644	003644	003644	003644		003644	003644	003644	003644
14	Base Asm	1			002690	002690	002690	002690		002690	002690	002690	002690
15	Plate,Strainer-Plastic	1			001082	001082	NA	NA		001082	001082	NA	NA
16	Cover & Handle “50”	1			034067	034067	034067	034067		034097	034097	034097	034097
17	• Plug,Test-White	2			034090	034090	034090	034090		034090	034090	034090	034090
18	• Seal,Thru Wall Term	2			003402	003402	003402	003402		003402	003402	003402	003402
19	Housing,Mtr-& Term Asm “50”	1			003177	004712	004712	004712		003177	004712	004712	004712
20	• Screw,#10-24 X.75 RHM-Sl SS	16			001885	001885	001885	001885		001885	001885	001885	001885
21	• Sem,10-12x.5HH-SlShmt Scr Tp A	3			003229	003229	NA	NA		003229	003229	NA	NA
22	• Screw,#6-32x.25RHM Sl Tc Stlgr	1			001877	001877	001877	001877		001877	001877	001877	001877
¤	Rebuild Kit “53/1053/55”	1			003181	004706	004706	004706		003181	004706	004706	004706

• Items included in Rebuild Kit. ¤ Not Shown in Illustration. § Not sold separately.

NOTES:

1) Strain Relief (Item 2) can be purchased separately, but is included with Cord, Terminal & Seal Assembly (Item 4) and with Seal, Cord Assembly (Item 3).
2) Specify GE or Emerson Motor. GE motor can be identified by white valox insulation on stator. Emerson can be identified by green epoxy insulation on stator.
3) When ordering these parts, customer must identify if switch is a General Electric switch.
4) See FM0160 Parts Price Sheet for listing of parts prices.
5) “NA” indicates, not applicable.
6) If an “X” follows Model No., or Date Mfg. on brass ID tag, consult factory for ordering any parts.

www.zoeller.com

ZOELLER PUMP CO.

MAIL TO: P.O. BOX 16347
Louisville, KY 40256-0347
SHIP TO: 3649 Cane Run Road
Louisville, KY 40211-1961
(502) 778-2731 • 1 (800) 928-PUMP
FAX (502) 774-3624

Manufacturers of..

“Quality Pumps Since 1939”

© Copyright 2006 Zoeller Co. All rights reserved.

REPLACEMENT PARTS ILLUSTRATION FOR MODELS “M53” AND “D53”

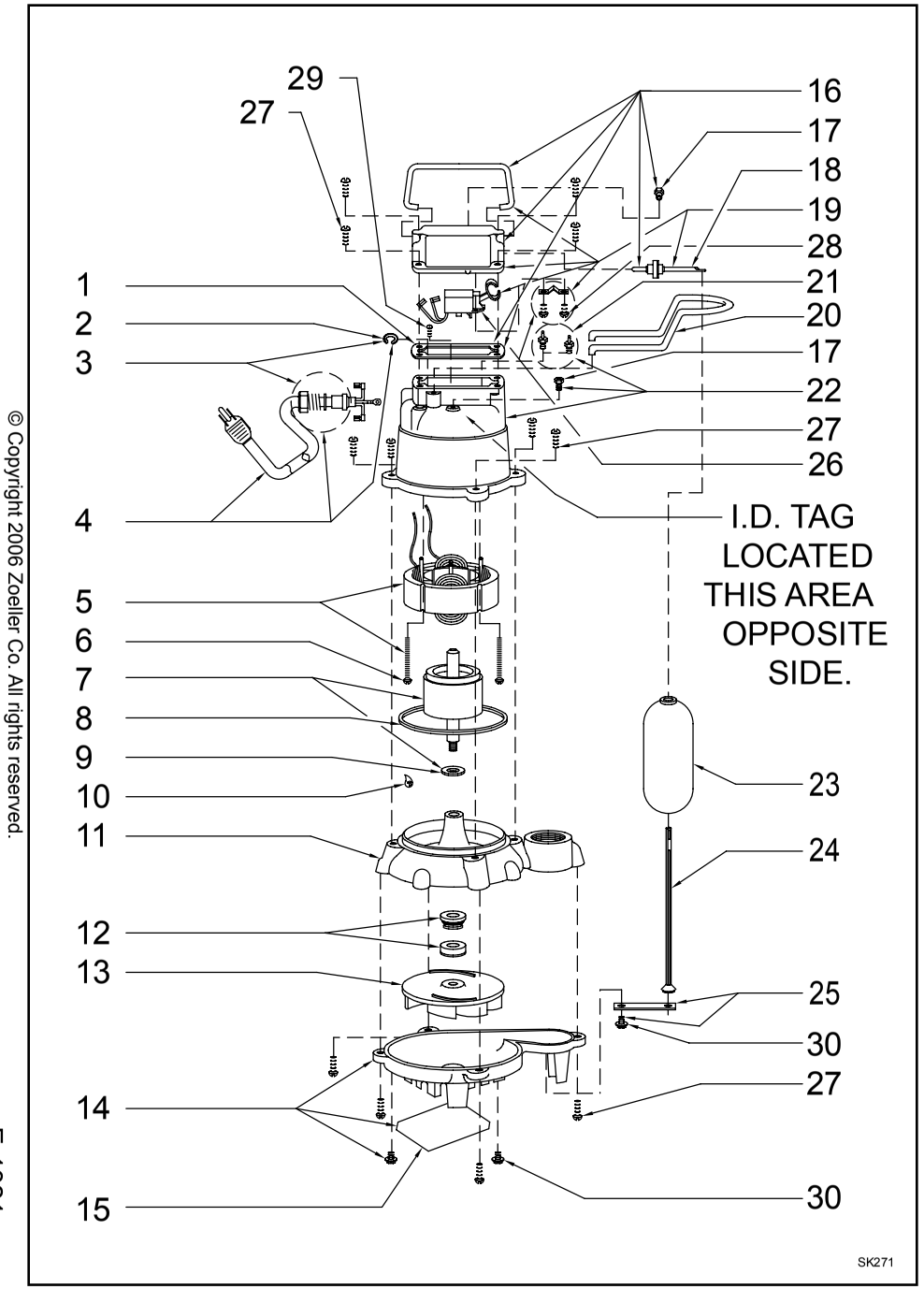

REPLACEMENT PARTS ILLUSTRATION FOR MODELS “N53” AND “E53”

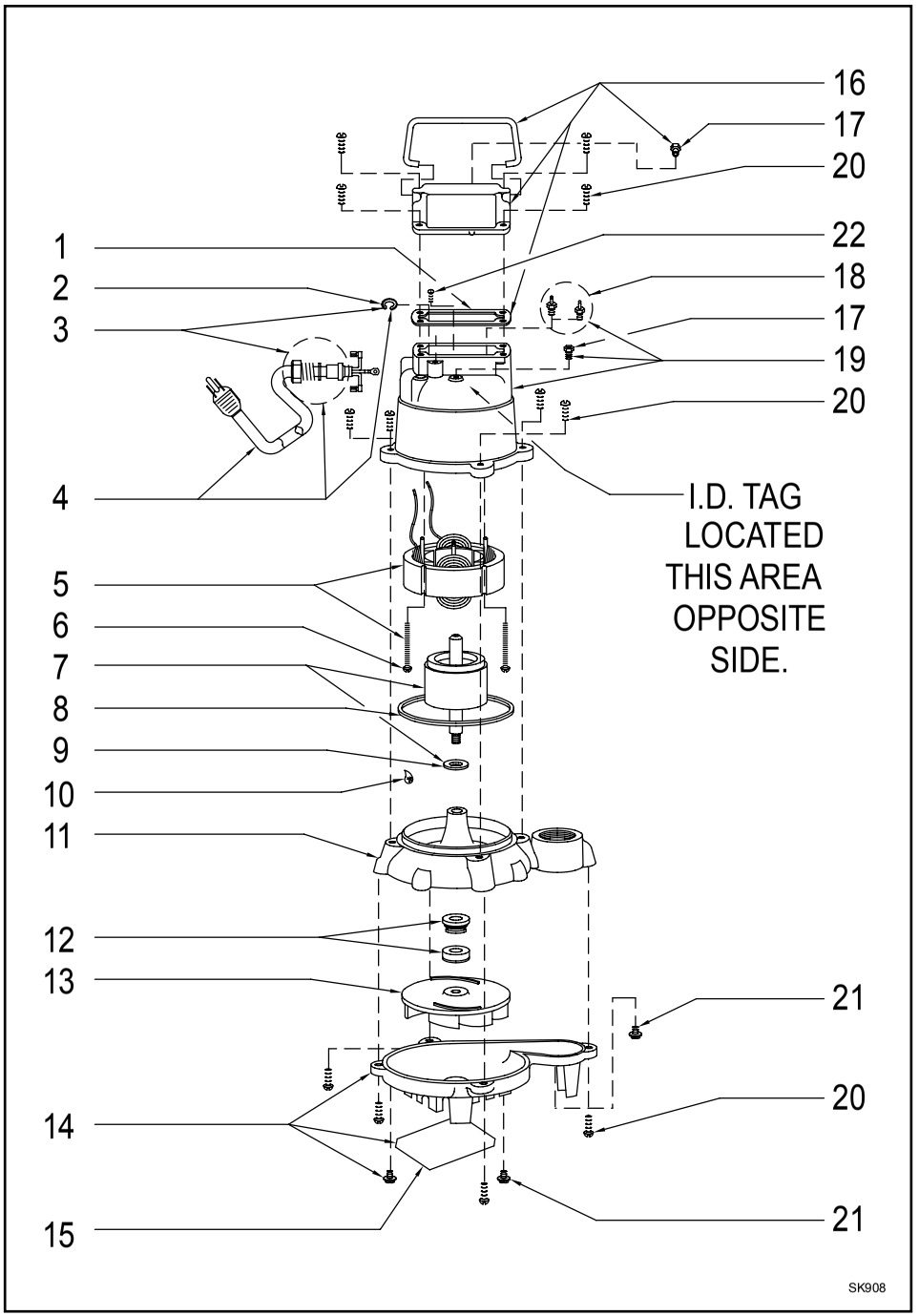

© Copyright 2006 Zoeller Co. All rights reserved.

PRV-0901 - Valve, Relief, Back Pressure, Kunkle, 1", Liquid Service

KUNKLE

Technical Reference for Safety and Relief Products

tyco Flow Control

Kunkle is either a trademark or registered trademark of Tyco International Services AG or its affiliates in the United States and/or other countries. All other brand names, product names, or trademarks belong to their respective holders.

Copyright © 2011 Tyco Flow Control. All rights reserved.

Contents

Definitions and Commonly Used Terms 3
ASME Codes 4
ASME Code Requirements 5
General Safety and Relief Valve Information 6
Safety and Relief Valve Pointers 7
Safety and Relief Valve Principles of Operation 8-9
Ordering Information 9
Valve Selection 10
Valve Selection Guide 11-13
Valve Sizing Overview and Coefficient Method 14
Sizing Formulas 15
Sizing Coefficient Method 16
Sizing Table A 17
Sizing Table B 18-19
Sizing Table C and D 20
Physical Properties 21-25
Conversion Factors 26-27
Installation 28-29
Maintenance 30
Guarantee 30
Terms and Conditions of Sale 31-32

Copyright © 2011 Tyco Flow Control. All rights reserved.

Definitions and Commonly Used Terms

A.S.M.E.
American Society of Mechanical Engineers.

A.P.I.
American Petroleum Institute

PRV
Relief Valve, Safety Valve, Safety Relief Valve.

Back Pressure
The pressure that exists at the outlet of a pressure relief device as a result of the pressure in the discharge system. It is the sum of the superimposed and built-up back pressures.

Built-up Back Pressure
The increase in pressure in the discharge header that develops as a result of flow after the pressure relief device opens.

Blowdown
The difference in pressure between the opening pressure and reclose pressure. May be expressed in percent of set pressure or "psig."

Body/Nozzle/Seat
The stationary seating surface, the inlet.

Cap
The pressure screw cover and/or lever housing. May be screwed, bolted, packed, or plain lever.

Chatter
Abnormal, rapid reciprocating movement of the disc on the seat of a pressure relief valve.

Coefficient of Discharge
The ratio of the measured relieving capacity to the theoretical relieving capacity.

Disc
The moveable seating surface.

Gag
A device attached to a safety or safety relief valve that prevents it from opening at the set pressure.

Guide
That portion of the valve used to guide the disc.

Lift
The distance between the seat and disc seating surfaces when the valve is in the full open position.

MAWP
Maximum allowable working pressure. This data is found on the pressure vessel nameplate and is the maximum pressure at which the lowest set safety valve must be set (stamped).

N.B.
National Board of Boiler and Pressure Vessel Inspectors.

Operating Pressure
The gauge pressure at which a pressure vessel is maintained in normal operation. The operating pressure should not be in excess of 90 percent of the PRV set pressure.

Accumulation
The permitted increase in pressure developed after the valve has opened. Usually expressed in percentage, maximum allowable accumulations are established by applicable codes for operating and fire contingencies.

Pre-open/Warn
An audible or visual discharge at a pressure slightly lower than the set pressure. Warns the operator that the valve is about to operate.

Pressure Relief Device
A device actuated by inlet static pressure and designed to open during an emergency or abnormal condition to prevent a rise of internal fluid pressure in excess of a specified value. The device may also be designed to prevent excessive internal vacuum. The device may be a pressure relief valve, a non-reclosing pressure relief device, or a vacuum relief valve.

psia
Pounds per square inch absolute or absolute pressure. Absolute pressure is equal to gauge pressure plus atmospheric pressure (14.7 psi [1.01 barg] at sea level).

psig
Pounds per square inch gauge or gauge pressure. Differential pressure across the valve, equal to absolute pressure inside the pressure vessel minus atmospheric pressure (14.7 psi [1.01 barg] at sea level).

Relief Valve
A spring-loaded pressure relief valve actuated by the static pressure upstream of the valve. The valve opens normally in proportion to the pressure increase over the opening pressure. A relief valve is used primarily with incompressible fluids (liquids).

Safety Relief Valve
A spring-loaded pressure relief valve that may be used as either a safety or relief valve depending on the application.

Safety Valve
A spring-loaded pressure relief valve actuated by the static pressure upstream of the valve and characterized by rapid opening or pop action. A safety valve is normally used with compressible fluids.

Set Pressure
The gauge pressure at which a safety valve visibly and audibly opens or at which a relief valve discharges a 1" long unbroken stream of liquid.

Spindle/Stem
The rod connecting to the disc.

Stamped Capacity
The rated relieving capacity that appears on the device nameplate. The stamped capacity is based on the set pressure or burst pressure plus the allowable overpressure for compressible fluids and the differential pressure for incompressible fluids.

Superimposed Back Pressure
The static pressure that exists at the outlet of a pressure relief device at the time the device is required to operate. It is the result of pressure in the discharge system coming from other sources and may be constant or variable.

Warn Ring or Regulator Ring
The control ring which surrounds the seat, used to control preopen and blowdown.

Yoke/Bonnet
The portion of a safety/relief valve that surrounds the spring; the spring housing.

Copyright © 2011 Tyco Flow Control. All rights reserved.

ASME Codes

The ASME (American Society of Mechanical Engineers) boiler and pressure vessels code requirements for overpressure protection as they relate to Kunkle products is as follows:

ASME Section I

This code applies to boilers where steam or other vapor is generated at a pressure of 15 psig [1.03 barg] or greater and high temperature water boilers intended for operation at pressures exceeding 160 psig [11.03 barg] and/or temperatures exceeding 250°F [121°C].

Boiler Pressure Accumulation

No more than 6 percent above the highest pressure at which any valve is set, or no more than 6 percent above MAWP.

Set Pressure

The set pressure of a one valve installation cannot be higher than the MAWP. The set pressure of the second or other valves in a multiple valve installation can be up to 3 percent above the MAWP. The complete range of valve settings for multiple valve installations cannot be greater than 10 percent of the highest set pressure. For high temperature water boilers, this 10 percent range may be exceeded.

ASME Section IV

This code applies to steam boilers operating at pressures not greater than 15 psig [1.03 barg] and hot water heating boilers operating at pressures not greater than 160 psig [11.03 barg] and/or temperatures not exceeding 250°F [121°C].

Steam Boilers

Valve capacity must be selected to prevent the boiler pressure from rising more than 5 psig [0.35 barg] above the MAWP.

Hot Water Boilers

Safety valve must be set to relieve at a pressure not greater than the MAWP of the boiler. If more than one safety valve is used, the secondary valve(s) may be set up to 6 psig [0.41 barg] above the MAWP for boilers with MAWPs up to and including 60 psig [4.13 barg], and 5 percent for boilers with MAWPs greater than 60 psig [4.13 barg]. Capacity must be selected to prevent the pressure from rising more than 10 percent above the set pressure of the highest set valve if more than one valve is used.

Tanks/Heat Exchangers High Temperature Water-to-Water Heat Exchangers

Valve(s) must be set at a pressure not greater than the MAWP and with sufficient capacity to prevent the pressure from increasing more than 10 percent above the MAWP.

Steam to Hot Water Supply

Valve(s) must be a least 1" [25 mm] diameter with set pressure not greater than MAWP of the tank.

High Temperature Water to Steam Heat Exchanger

Valve(s) must be set at a pressure not greater than 15 psig [1.03 barg] and with sufficient capacity to prevent the pressure from rising more than 5 psig [0.35 barg] above the MAWP.

ASME Section VIII

This code applies to unfired pressure vessels with an inside diameter larger than 6" [130 mm] and designed for use at or above 15 psig [1.03 barg]. Valve(s) must prevent the pressure from rising more than 10 percent or 3 psig [0.21 barg], whichever is greater, above the MAWP. For a single valve installation, the set pressure may not be greater than the MAWP. For multiple valve installations, the first valve cannot be set higher than the MAWP, but the other valves can be set up to 5 percent above the MAWP. The pressure rise for multiple valve installations can be 16 percent or 4 psig [0.27 barg], whichever is greater. When the vessel is exposed to an external heat source, such as fire, the pressure rise can be 21 percent above the MAWP.

Notes

1. MAWP - Maximum allowable working pressure.
2. Information stated above is based on latest code at time of publication.

Copyright © 2011 Tyco Flow Control. All rights reserved.

ASME Codes – Requirements

National Board

Kunkle valves are manufactured at facilities that meet the manufacturing requirements of the ASME Sections I, IV, and VIII codes for pressure relief valves. Valves that have the relief capacity certified by the National Board of Boiler and Pressure Vessel Inspectors bear the following code symbol stamp on the nameplate and the letters NB. Most Kunkle Valves have NB certified capacities.

Code Stamps

"V" - applies to all ASME Section I valves

"HV" - applies to all ASME Section IV valves

"UV" - applies to all ASME Section VIII valves

Notes

1. Information stated above is based on latest code at time of publication.
2. Non-code liquid valves are capacity rated at 25 percent overpressure.
3. Non-code air/gas/vapor and steam valves are capacity rated at 10 percent overpressure.

Power Boiler - Section I - Code "V"

Set Pressure psig	[barg]	Set Pressure Tolerance	Blowdown
15 – 66	[1.03 – 4.55]		2 – 4 psig [0.14 – 0.28 barg]
67 – 100	[4.62 – 6.90]		2 psi [0.14 barg] - 6%
101 - 250	[6.96 - 17.24]		2% - 6%
251 – 374	[17.31 – 25.79]		2% - 15 psig [1.03 barg]
375 – 1000	[25.86 – 68.96]		2% - 4%
15 – 69	[1.03 – 4.75]	±2 psig [±0.14 barg]	
70 – 300	[4.83 – 20.69]	±3%	
301 – 1000	[20.95 – 68.96]	±10% psig [±0.69 barg]	
1001 and up	[69.03 and up]	±1%	

1. Overpressure would be 2 psig [0.14 barg] for pressures between 15 psig [1.03 barg] and 70 psig [4.83 barg]. Pressures above 70 psig [4.83 barg] would have an overpressure of 3%.
2. Maximum blowdown for "Special Use" Section I is 10%.

Heating Boiler - Section IV - Code "HV"

	Set Pressure psig	[barg]	Set Pressure Tolerance	Blowdown	Overpressure
15 psig Steam	15	[1.03]	±2 psig [±0.14 barg]	2 – 4 psig [0.14 – 0.28 barg]	5 psig [0.34 barg]
Hot Water	15 – 60	[1.03 – 4.14]	±3 psig [±0.21 barg]	N/A	10%
Hot Water	61 – 160	[4.20 – 11.0]	±5%	N/A	10%

Unfired Pressure Vessel - Section VIII - Code "UV"

Set Pressure psig	[barg]	Set Pressure Tolerance	Blowdown	Overpressure
15 – 30	[1.03 – 2.07 barg]	±2 psig [±0.14 barg]	N/A	3 psig [0.21 barg]
31 – 70	[2.14 – 4.83 barg]	±2 psig [±0.14 barg]	N/A	10%
71 and up	[4.90 barg and up]	±3%	N/A	10%

Non-code Set Pressure Tolerance

Set Pressure, psig [barg]	Set Pressure Tolerance, psig [barg]
Below 15 psig [1.03 barg] to 10 psig [0.69 barg]	+/- 2.0 psig [±0.14 barg]
Below 10 psig [0.69 barg] to 5.0 psig [0.34 barg]	+/- 1.0 psig [±0.07 barg]
Below 5.0 psig [0.34 barg] to 0.0 psig [0.0 barg]	+/- 0.5 psig [±0.003 barg]
Below 0.0-inch Hg [0.0 mb] to 10-inch Hg [337 mb]	+/- 1.0-inch Hg [±33.7 mb]
Below 10-inch Hg [337 mb] to 20-inch Hg [674 mb]	+/- 2.0-inch Hg [±67.4 mb]
Below 20-inch Hg [674 mb]	+/- 4.0-inch Hg [±134.8 mb]

Copyright © 2011 Tyco Flow Control. All rights reserved.

General Safety and Relief Valve Information

Kunkle Factory Standard Seat Tightness

Code Section	Service	Performance Standard
I and VIII	Steam	No visible leakage for 15 seconds at 20% below nameplate set pressure or at 5 psig [0.35 barg] below nameplate set pressure, whichever is greater.
VIII	Air/Gas	No audible leakage for 15 seconds at 20% below nameplate set pressure or at 5 psig [0.35 barg] below nameplate set pressure, whichever is greater.
IV and VIII	Liquid	No visible leakage for 30 seconds at 20% below nameplate set pressure or at 5 psig [0.35 barg] below nameplate set pressure, whichever is greater.
IV	Steam	No visible leakage for 30 seconds at 12 psig [0.83 barg].

API - 527 Seat Tightness

Model	Code Section	Service	Performance Standard
300/600 6000 900	I and VIII	Steam	API 527 - No visible leakage for 1 minute at 10% below nameplate set pressure or 5 psig [0.35 barg] below nameplate set pressure, whichever is greater.
6010 (O-ring seat) 916/917 (soft seat) 918/919 (soft seat)	VIII	Air/Gas	API 527 - Bubble-tight for 1 minute at 10% below nameplate set pressure or 5 psig [0.35 barg] below nameplate set pressure, whichever is greater.
910/912 911/913	VIII	Air/Gas	API 527 - D and E orifice: 40 bubbles/min, F thru J orifice: 20 bubbles/min at 10% below nameplate set pressure or 5 psig [0.35 barg] below nameplate set pressure, whichever is greater.
916/917 (soft seat) 918/919 (soft seat)	VIII	Liquid	API 527 - No leakage for 1 minute at 10% below nameplate set pressure, or 5 psig [0.35 barg] below nameplate set pressure, whichever is greater.
910/912 911/913	VIII	Liquid	API 527 - 10 cc/h for inlet sizes less than 1" or 10 cc/h/in of inlet valve size for inlet sizes 1" and larger at 10% below nameplate set pressure or 5 psig [0.35 barg] below nameplate set pressure, whichever is greater.

Note

API 527 is not available on air service for:

a. Plain lever "J" orifice Models 900 and 6000.
b. Plain lever Model 900 above 444 psig [30.6 barg] set pressure.

The terms "safety valve" and "relief valve" are frequently used interchangeably. This is satisfactory to the extent that both safety and relief valves of the spring-loaded type are similar in external appearance and both serve the broad general purpose of limiting media (liquid or gaseous) pressures by discharging some of the pressurized liquid or gas. Some authorities restrict "safety valves" to those installed on boilers, superheaters, and fired vessels - all others being classified as relief valves. We prefer, however, to define them briefly as follows:

Safety valves are used on gaseous service (which include air and steam). Their design always includes a huddling chamber which utilizes the expansion forces of these gases to effect quick opening (popping) and closing actions. The difference between the opening and closing pressures is termed "blowdown," and for Section I and IV steam safety valves blowdown limitations are carefully stated in the ASME Power Boiler Code. Relief valves are normally used for liquid service, although safety valves may be so used. Ordinarily, relief valves do not have an accentuated huddling chamber nor a regulator ring for varying or adjusting blowdown. They therefore operate with a semi-modulating action in proportion to the system pressure. Such relieving action is desirable to protect piping systems from water hammer.

Copyright © 2011 Tyco Flow Control. All rights reserved.

Safety and Relief Valve Pointers

1. ASME Codes require that steam and air safety valves have test levers, although levers may be omitted on valves used in hazardous or toxic gas service.
2. Steam safety valves may be used for air service but not vice versa. Liquid valves should be used on liquid only.
3. Safety/relief valves should be installed vertically with the drain holes open or piped to a convenient location.
4. The inlet to and outlet from a safety/relief valve must be at least as large as the valve connections.
5. Every safety/relief valve is individually tested and set by Kunkle.
6. In the event you have safety/relief valve problems, first check the accuracy and cleanliness of pressure gauges and then refer to "Recommended Installation" for help in determining the cause of your problem. Feel free to consult your sales representative.
7. When ordering, we need to know size, type of connections, model number, pressure setting, required relieving capacity, and service media, or advise your complete requirements so that we can make a selection for you.
8. Following are procedures on the operation and testing of safety/relief valves:
   A. Avoid excessive operation of the safety/relief valve as even one opening can provide a means for leakage. Safety/relief valves should be operated only often enough to assure that they are in good working order.
   B. Test the valve by raising the operating pressure to the set pressure of the safety/relief valve, allowing it to open and reset as it would in normal service.
   C. Do not hand operate the valve with less than 75 percent of the stamped set pressure exerted on the underside of the disc. When hand operating, be sure to hold the valve in an open position long enough to purge accumulated foreign material from the seat area and then allow the valve to snap shut.

Copyright © 2011 Tyco Flow Control. All rights reserved.

Safety and Relief Valve Principles of Operation

Kunkle direct spring operated pressure relief valves consist of a nozzle threaded into a cast body housing which is flanged to a pressurized system. A disc is held against the nozzle by a spring, which is contained in a bonnet. The spring is adjusted by a compression screw to permit the calibration of opening or set pressure.

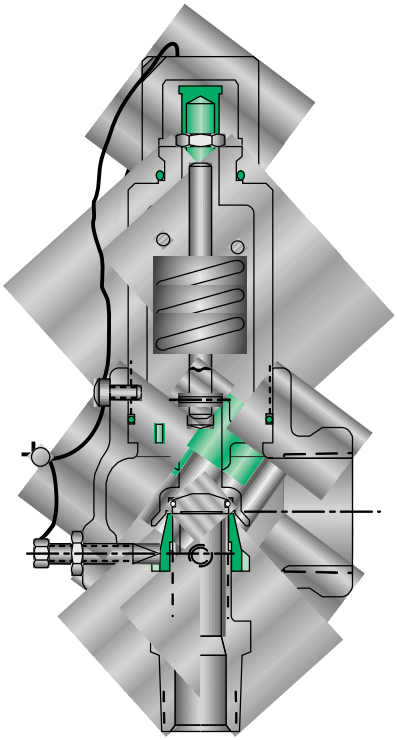

An adjustable nozzle ring, threaded onto the nozzle, controls the geometry of the fluid exit control chamber (huddling chamber). The huddling chamber geometry is very important in controlling valve opening and closing pressures, and stability of operation. The nozzle ring is locked into position by a ring pin assembly. A cap attached to the top of the bonnet seals the internal calibration adjustments. Refer to the illustration above for the location of these important components.

Under normal system operation the valve remains in the closed position because the spring force (Fs) is greater than the system pressure acting on the internal nozzle seating area (PA). If system pressure increases to a point when these forces are equal, the valve begins to simmer. The disc lifts and fluid flows through the valve. When pressure in the system returns to a safe level, the valve closes.

Just prior to reaching set point, the pressure relief valve leaks system fluid into the huddling chamber. The fluid now acts on a larger area of the disc inside the huddling chamber (PAh), causing the valve to experience an instantaneous increase in the opening force. Refer to the Figure on page 7 to see relationship between Nozzle Area (A) and the Huddling Chamber Area (Ah). System pressure acting on the larger area will suddenly open the pressure relief valve at a rapid rate.

Although the opening is rapid and dramatic, the valve does not open fully at set point. The system pressure must increase above the set point to open the valve to its full lift and full capacity position. Maximum lift and certified flow rates will be achieved within the allowable limits (overpressure) established by various codes and standards. All pressure relief valves are allowed an overpressure allowance to reach full rated flow.

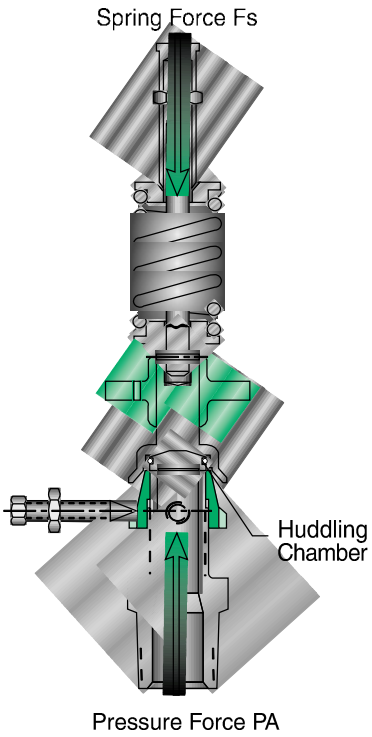

Copyright © 2011 Tyco Flow Control. All rights reserved.

Safety and Relief Valve Principles of Operation

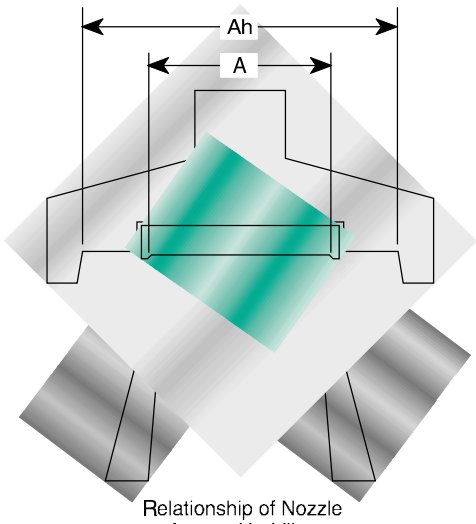

Relationship of Nozzle Area to Huddling Chamber Area

Once the valve has controlled the pressure excursion, system pressure will start to reduce. Since the huddling chamber area is now controlling the exit fluid flow, system pressure must reduce below the set point before the spring force is able to close the valve. The difference between the set pressure and the closing pressure is called blowdown, and is usually expressed as a percentage of set pressure. Refer to code for appropriate blowdown.

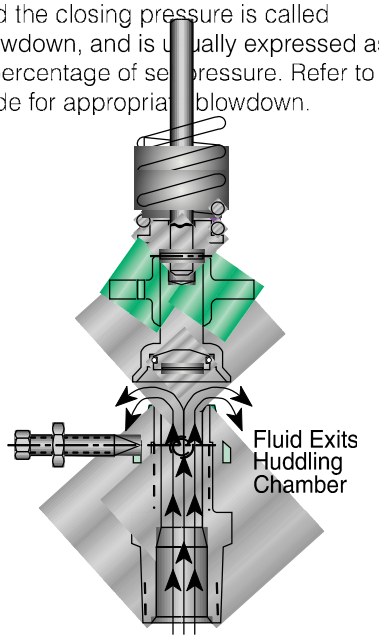

Valve Opens, Force P_{Ah} Acting on Disc

The nozzle ring adjustment changes the shape and volume of the huddling chamber, and its position will affect both the opening and closing characteristics of the valve. When the nozzle ring is adjusted to its top position, the huddling chamber is restricted to its maximum. This ring position will usually make the valve pop very distinctly with a minimum simmer (leakage before opening), but the blowdown will increase. When the nozzle ring is lowered to its lowest position, minimal restriction to the huddling chamber occurs. At this position, simmer increases and the blowdown decreases. The final ring position is somewhere between these two extremes to provide acceptable performance.

Liquid Service Operation

On liquid service, a different dynamic situation exists. Liquids do not expand when flowing across orifices, and a small amount of fluid flow across the nozzle will produce a large local pressure drop at the nozzle orifice. This local pressure drop causes the spring to reclose the valve if the fluid flow is minimal. Liquids leaking into the huddling chamber can quickly drain out by gravity and prevent fluid pressure from building up on the secondary area of the huddling chamber. Liquid relief valves are thus susceptible to a phenomenon called chatter, especially at low fluid flow rates. Chatter is the rapid opening and closing of the pressure relief valve and is often destructive in nature.

Since no visible or audible pop is heard at set point, liquid set pressure is defined as the pressure when the first heavy flow occurs (first steady vertical flow).

Ordering Information

Purchase orders must show the Size, Model Number, Set Pressure, and Service. (Include flange rating with size when applicable.)

1. To make a proper catalog selection, the following information will be needed:
   - A. Connection sizes (in and out), and types (male, female, flanged; 125#, 150#, 250#, 300#, etc.)
   - B. Material of construction
     - a. Bronze
     - b. Iron
     - c. Steel
     - d. Stainless Steel or other
   - C. Pressure setting
   - D. Service (steam, air, gas, etc., including any applicable codes or standards)
   - E. Capacity required, if available
   - F. Unusual conditions (temperature, location, etc.)

     Be sure to use the capacity correction factors for superheated steam, liquid overpressure (10 percent), air-gas temperature and density correction.
   - G. If valve is to be "equal to" another brand, provide nameplate information or specification data from brand being replaced.
2. Ordering data for replacement valves may be obtained from the valve nameplate or stamping.

Copyright © 2011 Tyco Flow Control. All rights reserved.

Valve Selection

The most critical consideration when selecting a pressure relief valve is that the valve will be capable of passing the maximum expected flow capacity. To properly select a relief valve the user must first determine the following:

1. The set pressure at which the valve is to operate. This pressure is based on the pressure limits of the system and the applicable codes. The set pressure of the primary pressure relief valve must not exceed the maximum allowable pressure of the system, but should be at least 10 percent above the maximum operating pressure.
2. The physical properties of the fluid media to be relieved. Capacity values are given in the Kunkle catalogs based on air, saturated steam, and water. Kunkle valves will relieve many other fluids, but information such as molecular weight, specific gravity, viscosity, ratio of specific heats, compressibility factor, and process temperature may be necessary to insure accurate valve selection.
3. The required relieving capacity. The ASME Boiler and Pressure Vessel Code, American Petroleum Institute Recommended Practices, and other applicable standards have many rules for obtaining the required relieving capacity and should be referenced when making this determination. The user must consider all sources of pressure generation in the system that will be protected by the pressure relief valve. Examples of pressure generation sources are pumps, heat input that may cause the system fluid to boil or expand, etc. The pressure relief valve(s) selected must exceed the worst case source of flow generation to prevent the system pressure from exceeding acceptable limits.

Once the previous information has been collected, the pressure relief valve may be sized by using the capacity charts (included in each model's catalog sheet) or by performing sizing calculations (see Valve Sizing, pages 14-25). The user will also want to consider other important factors such as:

- Connection size and type. This information is given in the Valve Selection Guide and in each of the Model Catalog sheets. Please note that the inlet to and outlet from a pressure relief valve must be at least as large as the valve connections to prevent valve malfunction.
- Pipe Size. Connection pipe sizes should not be determined by equipment connections, but rather by the relieving capacity of the PRV.
- Applicable code compliance. The ASME Code Summary section gives important information about pressure relief valves from the code. Pressure relief valve users are strongly encouraged to reference the full version of the code for important rules that may not be included in this manual.
- Maximum allowable seat leakage. The General Safety and Relief Valve Information (page 6) section of this manual shows the leakage acceptance criteria applied to each Kunkle valve. Pressure relief valve users should keep in mind that if "zero leakage" is a requirement, a soft seated valve must be selected.
- Environmental conditions. Environmental conditions play a significant role in how pressure relief valves operate. Extremely high ambient temperatures may affect the set pressure of the valve, extremely low temperatures combined with moisture can cause valves to "freeze up" and prevent proper operation, and vibration may severely shorten the service life of the valve. The Valve Selection Guide (pages 11-13) in this manual has general information on the pressure and temperature limits for each valve series. For specific model limitations refer to the individual model catalog. For vibration service, please contact your local Kunkle representative for assistance.
- Valve options. Each Kunkle model is offered with useful options such as pressure tight caps, lift lever options, or vibration dampening preparation. When selecting valve options, keep in mind that there are code requirements that may dictate what options may be used. For instance the ASME code dictates that all air, steam and hot water (140°F+[60°C+]) pressure relief valves must be equipped with a lift lever. Refer to the individual model catalogs for listings of available options.
- Installation space. The individual model catalogs show envelope dimensions for each configuration and size.

For assistance on valve sizing and selection, please contact your local sales representative.

Copyright © 2011 Tyco Flow Control. All rights reserved.

Valve Selection Guide

(For specific minimum/maximum temperature/pressure ranges refer to individual product sections.)

Steam (ASME Section I - Power Boilers)

Model(s)	Material		Connections		Inlet Size Range		Min/Max[1] Press.		Min/Max Temp.	
	Body	Trim	NPT	FLGD	in	[mm]	psig	[barg]	°F	[°C]
300, 600	CS	SS		X	1¼ - 6"	[31.75 - 152.4]	15/1000	[1.0/69]	-20/800	[-29/427]
920, 921, 927 (special use – 10% blowdown)	CS	SS	X		½ - 2"	[12.7 - 50.8]	15/1400	[1.0/96.5]	-20/800	[-29/427]
6010, 6021, 6121, 6182 6186, 6221, 6283	Bronze	Brass	X		½ - 2½"	[12.7 - 63.5]	3/250	[0.69/17.2]	-60/406	[-51/208]
6030, 6130, 6230	Bronze	SS	X		½ - 2½"	[12.7 - 63.5]	3/300	[0.69/20.7]	-60/425	[-51/219]
6252	Iron	SS	X	X	1½ - 6"	[38.1 - 152.4]	10/250	[0.69/17.2]	-20/406	[-29/208]

Steam (ASME Section VIII - Unfired Steam Equipment)

1 and 2	Bronze	Brass	X		½ - 1"	[12.7 - 25.4]	5/250	[0.34/17.2]	-60/406	[-51/208]
264, 265	CS	SS	X		½ - 1"	[12.7 - 25.4]	4/3300	[0.28/227.6]	-20/750	[-29/399]
266, 267	SS	SS	X		½ - 1"	[12.7 - 25.4]	4/3300	[0.28/227.6]	-20/750	[-29/399]
300, 600	CS	SS		X	1¼ - 6"	[31.75 - 152.4]	15/1000	[1.0/69]	-20/750	[-29/399]
910	CS	SS	X	O	½ - 2"	[12.7 - 50.8]	3/1400	[0.21/96.5]	-20/800	[-29/427]
911	SS	SS	X	O	½ - 2"	[12.7 - 50.8]	3/1400	[0.21/96.5]	-320/800	[-195/427]
912	Bronze	Brass	X		½ - 2"	[12.7 - 50.8]	3/250	[0.21/17.2]	-320/406	[-195/208]
913	Bronze	SS	X		½ - 2"	[12.7 - 50.8]	3/300	[0.21/20.7]	-320/425	[-195/219]
6010, 6021, 6121, 6182, 6186, 6221, 6283	Bronze	Brass	X		½ - 2½"	[12.7 - 63.5]	3/250	[0.21/17.2]	-60/406	[-51/208]
6030, 6130, 6230	Bronze	SS	X		½ - 2½"	[12.7 - 63.5]	3/300	[0.21/20.7]	-60/425	[-51/219]
6252	Iron	SS	X	X	1½ - 6"	[38.1 - 152.4]	10/250	[0.69/17.2]	-20/406	[-29/208]

Steam (ASME Section IV - Low Pressure Steam Heating Boilers)

930	Iron	Bronze	X		2 - 3"	[50.8 - 76.2]	15 only	[1.0]	250 only	[122]
6933, 6934	Bronze	Brass	X		½ - 2"	[12.7 - 50.8]	15 only	[1.0]	250 only	[122]
6935	Bronze	SS	X		½ - 2"	[12.7 - 50.8]	15 only	[1.0]	250 only	[122]
6254	Iron	SS	X	X	1½ - 6"	[38.1 - 152.4]	15 only	[1.0]	250 only	[122]

Steam (Non-code)[2]

40R, 40RL	SS	SS	X		½ - ¾"	[12.7 - 19.05]	1/400	[0.07/27.6]	-60/850	[-51/454]

X = Standard O = Optional

Notes

1. Set pressures less than 15 psig [1.0 barg] are non-code only.
2. See also ASME Section VIII steam valves for non-code steam applications.

Copyright © 2011 Tyco Flow Control. All rights reserved.

Valve Selection Guide

(For specific minimum/maximum temperature/pressure ranges refer to individual product sections.)

Air/Gas (ASME Section VIII)

Model(s)	Material		Connections		Inlet Size Range		Min/Max[3] Press.		Min/Max[4] Temp.	
	Body	Trim	NPT	FLGD	in	[mm]	psig	[barg]	°F	[°C]
1 and 2	Brass	Brass	X		1/2 - 1"	[12.7 - 25.4]	5/250	[0.34/17.2]	-60/406	[-51/208]
30	Brass	Brass	X		1/4"	[6.35]	60/4000	[4.1/275.8]	20/300	[-6.6/150]
189	Bronze	SS	X		1/2 - 3/4"	[12.7 - 19.05]	1000/2500	[69/344.8]	-320/350	[-195/177]
264, 265	CS	SS	X		1/2 - 1"	[12.7 - 25.4]	4/3300	[0.28/227.6]	-20/750	[-29/399]
266, 267	SS	SS	X		1/2 - 1"	[12.7 - 25.4]	4/3300	[0.28/227.6]	-20/750	[-29/399]
300, 600	CS	SS		X	1 1/4 - 6"	[31.75 - 152.4]	15/1000	[1.0/69]	-20/800	[-195/427]
330[5]	Aluminum	SS	X		1/4"	[6.35]	1000/5500	[69/379.3]	-20/185	[-29/85]
330S, 333S[5]	Aluminum	SS			1/4"	[6.35]	2000/6500	[138/448.3]	-20/185	[-29/85]
337	Iron	Bronze	X		2 - 3"	[50.8 - 76.2]	1/60	[0.07/4.14]	-20/406	[-29/208]
338	Aluminum	Brass	X		2"	[50.8]	5/30	[0.3/2.07]	-30/400	[-34/204]
363	Bronze	SS	X		1/2 - 3/4"	[12.7 - 19.05]	50/1000	[3.4/69]	-320/350	[-195/177]
389	SS	SS	X		1/2 - 3/4"	[12.7 - 19.05]	50/2500	[3.4/172.4]	-320/350	[-195/177]
541 (Buna disc), 542 (Viton® disc), 548 (SS disc)	Brass	Brass	X		1/4 - 1/2"	[6.35 - 12.7]	3/400	[0.21/27.6]	-20/400	[-29/204]
910, 916 (soft seat)[4]	CS	SS	X	O	1/2 - 2"	[12.7 - 50.8]	3/1400	[0.21/96.5]	-20/800	[-29/427]
911, 917 (soft seat)[4]	SS	SS	X	O	1/2 - 2"	[12.7 - 50.8]	3/1400	[0.21/96.5]	-320/800	[-195/427]
912, 918 (soft seat)[4]	Bronze	Brass	X		1/2 - 2"	[12.7 - 50.8]	3/300	[0.21/20.7]	-320/406	[-195/208]
913, 919 (soft seat)[4]	Bronze	SS	X		1/2 - 2"	[12.7 - 50.8]	3/1400	[0.21/96.5]	-320/425	[-195/219]
6010, 6121, 6182 6186, 6221, 6283[1]	Bronze	Brass	X		1/2 - 2 1/2"	[12.7 - 63.5]	3/250	[0.21/17.2]	-60/406	[-51/208]
6030, 6130, 6320	Bronze	SS	X		1/2 - 2 1/2"	[12.7 - 63.5]	3/300	[0.21/20.7]	-60/425	[-51/219]
6252	Iron	SS	X	X	1 1/2 - 6"	[38.1 - 152.4]	10/250	[0.69/17.2]	-20/406	[-29/208]

Air/Gas[2] (Non-code)

230 (Kynar® seat)	Aluminum	SS	X		1/4"	[6.35]	300/1500	[20.7/103.4]	-20/185	[-29/85]
803 (Kynar® seat)	Aluminum	SS	X		1/4"	[6.35]	1000/6000	[69/413.8]	-20/185	[-29/85]
818 (Teflon® seat)	CS	SS/Brass	X		2"	[50.8]	120/150	[8.3/10.3]	-20/300	[-29/150]

Air/Gas (Vacuum) in Hg [mm Hg]

215V	Iron	Bronze	X		2 - 3"	[50.8 - 76.2]	2/29	[50/736]	-20/406	[-29/208]
910, 916 (soft seat)[4]	CS	SS	X	O	1/2 - 2"	[12.7 - 50.8]	6/29	[152/736]	-20/800	[-29/427]
911, 917 (soft seat)[4]	SS	SS	X	O	1/2 - 2"	[12.7 - 50.8]	6/29	[152/736]	-320/800	[-195/427]
912, 918 (soft seat)[4]	Bronze	Brass	X		1/2 - 2"	[12.7 - 50.8]	6/29	[152/736]	-320/406	[-195/208]
913, 919 (soft seat)[4]	Bronze	SS	X		1/2 - 2"	[12.7 - 50.8]	6/29	[152/736]	-320/425	[-195/219]

X = Standard O = Optional

Notes

1. Soft seat available on some models.
2. See also Section VIII air valves for non-code air/gas applications.
3. Set pressures less than 15 psig [1.0 barg] are non-code only.
4. Temperature limits of soft seats determine operating limits of valve.
5. Kynar® or Urethane Seat.

Copyright © 2011 Tyco Flow Control. All rights reserved.

Valve Selection Guide

(For specific minimum/maximum temperature/pressure ranges refer to individual product sections.)

Liquid (ASME Section IV - Hot Water Boilers)

Model(s)	Material Body	Material Trim	Connections NPT	Connections FLGD	Inlet Size Range in	Inlet Size Range [mm]	Min/Max[1] Press. psig	Min/Max[1] Press. [barg]	Min/Max[2] Temp. °F	Min/Max[2] Temp. [°C]
537 (soft seat)	Iron/Bronze		Brass	X	3/4 - 2"	[19.05 - 50.8]	15/160	[1.0/11]	-20/250	[-29/121]

Liquid (ASME Section VIII)

910, 916 (soft seat)[2]	CS	SS	X	O	1/2 - 2"	[12.7 - 50.8]	3/1400	[0.21/96.5]	-20/800	[-29/427]
911, 917 (soft seat)[2]	SS	SS	X	O	1/2 - 2"	[12.7 - 50.8]	3/1400	[0.21/96.5]	-320/800	[-195/427]
912, 918 (soft seat)[2]	Bronze	Brass	X		1/2 - 2"	[12.7 - 50.8]	3/300	[0.21/20.7]	-320/406	[-195/208]
913, 919 (soft seat)[2]	Bronze	SS	X		1/2 - 2"	[12.7 - 50.8]	3/1400	[0.21/96.5]	-320/425	[-195/219]

Liquid (Non-code)

19, 20	Bronze	Bronze	X	O	1/2 - 3"	[12.7 - 76.2]	1/300	[0.07/20.7]	-60/406	[-51/208]
19M, 20M	Bronze	SS	X	O	2 1/2 - 3"	[63.5 - 76.2]	1/500	[0.07/34.5]	-60/406	[-51/208]
71S	Iron	SS	X		1/2 - 2"	[12.7 - 50.8]	1/250	[0.07/17.2]	-20/406	[-29/208]
171, 171P	CS	SS	X		1/2 - 2"	[12.7 - 50.8]	1/400	[0.07/27.6]	-20/550	[-29/288]
171S	SS	SS	X		1/2 - 2"	[12.7 - 50.8]	1/400	[0.07/27.6]	-20/550	[-29/288]
91	Iron	Bronze	X	X	1 1/2 - 6"	[38.1 - 152.4]	5/400	[0.34/27.6]	-20/406	[-29/208]
218,228	Iron	Bronze	X		3, 4, and 6"	[76.2 - 152.4]	60/200	[4.1/13.8]	-20/406	[-29/208]
140	SS	SS	X		3/8 - 1/2"	[9.5 - 12.7]	10/300	[0.69/20.7]	-60/406	[-51/208]
264, 265	CS	SS	X		1/2 - 1"	[12.7 - 25.4]	4/3300	[0.28/227.6]	-20/750	[-29/399]
266, 267	SS	SS	X		1/2 - 1"	[12.7 - 25.4]	4/3300	[0.28/227.6]	-20/750	[-29/399]
910, 916 (soft seat)[2]	CS	SS	X	O	1/2 - 2"	[12.7 - 50.8]	3/1400	[0.21/96.5]	-20/800	[-29/427]
911, 917 (soft seat)[2]	SS	SS	X	O	1/2 - 2"	[12.7 - 50.8]	3/1400	[0.21/96.5]	-320/800	[-195/427]
912, 918 (soft seat)[2]	Bronze	Brass	X		1/2 - 2"	[12.7 - 50.8]	3/300	[0.21/20.7]	-320/406	[-195/208]
913, 919 (soft seat)[2]	Bronze	SS	X		1/2 - 2"	[12.7 - 50.8]	3/1400	[0.21/96.5]	-320/425	[-195/219]

Liquid - Underwriters Laboratories (UL) For Oil Services

200A	Bronze	Brass	X		3/4 - 1 1/2"	[19.05 - 38.1]	1/200	[0.07/13.8]	-60/406	[-51/208]
200H	Bronze	SS	X	O	3/4 - 2"	[19.05 - 50.8]	1/200	[0.07/13.8]	-60/406	[-51/208]

Liquid - Underwriters Laboratories (UL) and Factory Mutual Research (FM) For Fire Pump Water Relief

218, 228	Iron	Bronze	X	X	3, 4 and 6"	[76.2 - 152.4]	60/200	[4.1/13.8]	-20/406	[-29/208]
918 (soft seat)[2, 3]	Bronze	Brass	X		3/4 - 1"	[19.05 - 25.4]	60/250	[4.1/17.2]	-20/406	[-29/208]

Other - Drip Pan Elbow

299	Iron	N/A	X	X	2 - 8"	[50.80 - 203.2]	N/A	N/A	-20/406	[-29/208]

X = Standard O = Optional

Notes

1. Set pressures below 15 psig [1.0 barg] are non-code only.
2. Temperature limits of soft seats determine operating limits of valve.
3. FM Approved only.

Copyright © 2011 Tyco Flow Control. All rights reserved.

Valve Sizing

After the required relieving capacity has been determined, the pressure relief valve may be sized by using the capacity charts that are included in each model's catalog sheet. The capacities given in those charts may be adjusted for special conditions such as fluid density and temperature by using the correction factors given in Tables B through D (pages 18-20). Valves may also be sized by performing sizing calculations per the formulas (pages 15 and 16) in this section.

Most Kunkle valves may be sized by using the "Coefficient Method" (listed below). These valves typically are high lift valves where the nozzle bore is the flow controlling orifice. This calculation method involves selecting the valve model and corresponding flow coefficient and orifice area from Table A (page 16) and then using the capacity formula (page 14) for the service in which the valve will function.

Kunkle Models 30, 541, 542, and 548 use the "Slope Method" for sizing calculations. These valves are typically low lift valves, where the annular orifice between the disc and the nozzle seat is the flow controlling orifice. These models are characterized by having a linear increase in capacity with respect to inlet pressure. The "slope" defines this direct relationship of inlet pressure to capacity. Consult your sales representative for sizing assistance.

Kunkle Models 1, 2, 19, 20, 200, 71S, 171, 171S, 91, 218, 228, and 140 use the "KA Method" for sizing calculations. This method is similar to the slope method, in that it is used for low lift valves and is empirically derived. The major difference is that the relationship between inlet pressure and capacity is not linear. These valves are characterized by having low lift that varies with inlet pressure, which makes the flow controlling orifice area indeterminate. Consult your sales representative for sizing assistance.

IV-A Coefficient Method

Follow these steps for calculating what orifice size is necessary to flow the required capacity:

1. Select the Model Family that you are interested in from the Valve Selection Guide (pages 10-13).
2. From Table A (page 17), record the Flow Coefficient (K_d) corresponding to the service in which the valve will operate.
3. Select the proper formula(s) for the service in which the valve will operate. Calculate the minimum required orifice area.
4. Select the Orifice/Size Designation from Table A (page 17) that has a Flow Area closest to, but not less than the minimum required orifice area calculated in step 3.

Copyright © 2011 Tyco Flow Control. All rights reserved.

Valve Sizing

U.S. Units **Metric Units**

Steam - Sections I, IV and VIII (15 psig and above)

$$A = \frac{W}{51.5\ K_d\ P_1\ K_{sh}}$$

$$A = \frac{W}{52.5\ K_d\ P_1\ K_{sh}}$$

Steam - Non Code (less than 15 psig)

$$A = \frac{W}{735\ F_2\ K_d}\ \sqrt{\frac{TZ}{M\ P_1\ (P_1 - P_2)}}$$

$$A = \frac{W}{558\ F_2\ K_d}\ \sqrt{\frac{TZ}{M\ P_1\ (P_1 - P_2)}}$$

Air - Section VIII (15 psig and above)

$$A = \frac{V\sqrt{MTZ}}{6.32\ C\ K_d\ P_1}$$

Volumetric Flow

$$A = \frac{V\sqrt{MTZ}}{17.02\ C\ K_d\ P_1}$$

Volumetric Flow

$$A = \frac{W}{C\ K_d\ P_1}\ \sqrt{\frac{TZ}{M}}$$

Mass Flow

$$A = \frac{1.316W}{C\ K_d\ P_1}\ \sqrt{\frac{TZ}{M}}$$

Mass Flow

Air - Non-Code (less than 15 psig)

$$A = \frac{V}{4645.2\ F_2\ K_d}\ \sqrt{\frac{MTZ}{P_1\ (P_1 - P_2)}}$$

$$A = \frac{V}{12503\ F_2\ K_d}\ \sqrt{\frac{MTZ}{P_1\ (P_1 - P_2)}}$$

Liquid - Section VIII (15 psig and above)

$$A = \frac{Q}{38\ K_d}\ \sqrt{\frac{G}{(1.1\ p_1 - p_2)}}$$

$$A = \frac{Q}{5.094\ K_d}\ \sqrt{\frac{G}{(1.1\ p_1 - p_2)}}$$

Liquid - Non-Code

$$A = \frac{Q}{38\ K_d}\ \sqrt{\frac{G}{(1.25\ p_1 - p_2)}}$$

$$A = \frac{Q}{5.094\ K_d}\ \sqrt{\frac{G}{(1.25\ p_1 - p_2)}}$$

F_2 - Coefficient of Subcritical Flow

$$F_2 = \sqrt{\left(\frac{k}{k-1}\right)\left(r\right)^{2/k}\left[\frac{1 - r^{(k-1)/k}}{1 - r}\right]}$$

Note

1. Consult your sales representative for sizing assistance for product groups: Fig. 1 and 2; Fig. 19, 20, 200; Fig. 30; Fig. 71S, 171, 171S; Fig. 91, 218, 228; Fig. 140; and Fig. 541, 542 and 548.

Copyright © 2011 Tyco Flow Control. All rights reserved.

Valve Sizing

Sizing Coefficient Method

A = Required effective discharge area of the valve, in^2 [cm^2]

W = Mass Flow Rate, lb/hr [kg/hr]

V = Volumetric Flow Rate (gases, vapors) in SCFM [Nm^3/hr] at standard atmospheric conditions of 14.7 psia and 60°F [1.013 bara/0°C]

Q = Volumetric Flow Rate (liquids) in GPM [m^3/hr] at standard atmospheric conditions of 14.7 psia and 70°F [1.013 bara/21°C]

K_d = ASME Flow Coefficient of Discharge

P_1 = See chart below

P_2 = Atmospheric Pressure = 14.7 psia

p_1 = Set Pressure (psig)

p_2 = Back Pressure (psig)

F_2 = Coefficient of Subcritical Flow

k = Ratio of Specific Heat - 1.31 for Steam, 1.4 for Air

r = Ratio of Back Pressure to Upstream Relieving Pressure = P_2/P_1

M = Molecular Weight of Process Medium

T = Relieving Temperature, °R = °F + 460 [°K = °C + 273]

Z = Compressibility Factor (assume Z = 1 if unknown)

C = Gas Constant based on k (if unknown, use C = 315)

G = Specific Gravity of process fluid at 70°F [21°C]

K_{sh} = Superheat Steam Correction Factor

Allowable Overpressure

Designation	Section	Definition
P_1	Section I Steam (15 psig and above)	Set pressure + 3% or 2 psi overpressure (whichever is greater) + 14.7 psia
P_1	Section IV Steam (15 psig and above)	Set pressure + 5 psi overpressure + 14.7 psia for Low Pressure Steam Boilers
P_1	Section IV Hot Water (15 psig and above)	Set pressure + 10% overpressure + 14.7 psia for Hot Water Boilers
P_1	Non-Code Steam (below 15 psig)	Set pressure + 10% overpressure + 14.7 psia
P_1	Section VIII Steam (15 psig and above)	Set pressure + 10% or 3 psi overpressure (whichever is greater) + 14.7 psia
P_1	Non-Code Air (below 15 psig)	Set pressure + 10% overpressure + 14.7 psia
P_1	Section VIII Air (15 psig and above)	Set pressure + 10% or 3 psi overpressure (whichever is greater) + 14.7 psia
P_1	Non-Code Liquid (below 15 psig)	Set pressure (psig)
P_1	Section VIII Liquid (15 psig and above)	Set pressure (psig)

Copyright © 2011 Tyco Flow Control. All rights reserved.

Valve Sizing

Table A

Model Family	Orifice/Size Designation	Flow Area in²	Flow Area [cm²]	Flow Coefficient (K_d) Non-Code and ASME Section VIII Air/Gas and Steam	Flow Coefficient (K_d) ASME Section I Steam	Flow Coefficient (K_d) ASME Section IV Steam	Flow Coefficient (K_d) Non-Code and ASME Section VIII Liquid
189	C	0.034	[0.219]	0.874			
	D	0.034	[0.219]	0.874			
264	C	0.110	[0.710]	0.766			0.408
	D	0.110	[0.710]	0.766			0.408
	E	0.110	[0.710]	0.766			0.408
337	H	1.838	[11.858]	0.860			
	J	2.786	[17.974]	0.860			
	K	4.037	[26.045]	0.860			
537	D	0.533	[3.439]			0.806	
	E	0.833	[5.374]			0.806	
	G	1.767	[11.400]			0.806	
	H	3.142	[20.271]			0.806	
910	D	0.121	[0.781]	0.878	0.878		0.710
	E	0.216	[1.394]	0.878	0.878		0.710
	F	0.337	[2.174]	0.878	0.878		0.710
	G	0.553	[3.568]	0.878	0.878		0.710
	H	0.864	[5.574]	0.878	0.878		0.710
	J	1.415	[9.129]	0.878	0.878		0.710
930	H	5.080	[32.774]			0.818	
	J	6.350	[40.968]			0.818	
	K	7.620	[49.161]			0.818	
6010	D	0.121	[0.781]	0.878	0.878	0.878	
	E	0.216	[1.394]	0.878	0.878	0.878	
	F	0.337	[2.174]	0.878	0.878	0.878	
	G	0.553	[3.568]	0.878	0.878	0.878	
	H	0.864	[5.574]	0.878	0.878	0.878	
	J	1.415	[9.129]	0.878	0.878	0.878	
6252	J	1.414	[9.123]	0.878	0.878	0.878	
	K	2.022	[13.045]	0.878	0.878	0.878	
	L	3.138	[20.245]	0.878	0.878	0.878	
	M	3.960	[25.548]	0.878	0.878	0.878	
	N	4.774	[30.800]	0.878	0.878	0.878	
	P	7.018	[45.277]	0.878	0.878	0.878	
	Q	12.155	[78.419]	0.878	0.878	0.878	
	R	17.600	[113.548]	0.878	0.878	0.878	

Copyright © 2011 Tyco Flow Control. All rights reserved.

Valve Sizing

Table B - Steam Super Heat Correction Factor, K_{sh}

Set Pressure psig	[barg]	Saturated Steam Temp. °F	[°C]	Total Steam Temperature °F [°C] 280 [138]	300 [149]	320 [160]	340 [171]	360 [182]	380 [193]	400 [205]	420 [216]	440 [227]	460 [238]	480 [249]	500 [260]	520 [271]	540 [282]	560 [293]
15	[1.03]	250	[121]	1.00	1.00	1.00	.99	.99	.98	.98	.97	.96	.95	.94	.93	.92	.91	.90
20	[1.38]	259	[126]	1.00	1.00	1.00	.99	.99	.98	.98	.97	.96	.95	.94	.93	.92	.91	.90
40	[2.76]	287	[142]		1.00	1.00	1.00	.99	.99	.98	.97	.96	.95	.94	.93	.92	.91	.90
60	[4.14]	308	[153]			1.00	1.00	.99	.99	.98	.97	.96	.95	.94	.93	.92	.91	.90
80	[5.52]	324	[162]				1.00	1.00	.99	.99	.98	.97	.96	.94	.93	.92	.91	.90
100	[6.90]	338	[170]					1.00	1.00	.99	.98	.97	.96	.95	.94	.93	.92	.91
120	[8.27]	350	[177]					1.00	1.00	.99	.98	.97	.96	.95	.94	.93	.92	.91
140	[9.65]	361	[183]						1.00	1.00	.99	.98	.96	.95	.94	.93	.92	.91
160	[11.0]	371	[188]						1.00	1.00	.99	.98	.97	.95	.94	.93	.92	.91
180	[12.4]	380	[193]							1.00	.99	.98	.97	.96	.95	.93	.92	.91
200	[13.8]	388	[198]							1.00	.99	.99	.97	.96	.95	.93	.92	.91
220	[15.2]	395	[202]							1.00	1.00	.9	.98	.96	.95	.94	.93	.92
240	[16.6]	403	[206]								1.00	.99	.98	.97	.95	.94	.93	.92
260	[17.9]	409	[210]								1.00	.99	.98	.97	.96	.94	.93	.92
280	[19.3]	416	[213]								1.00	1.00	.98	.97	.96	.95	.93	.92
300	[20.7]	422	[217]									1.00	.99	.98	.96	.95	.93	.92
350	[24.1]	436	[225]									1.00	1.00	.99	.96	.96	.94	.93
400	[27.6]	448	[231]										1.00	.99	.96	.96	.95	.93
450	[31.0]	460	[238]											1.00	.96	.96	.96	.94
500	[34.5]	470	[243]											1.00	.96	.96	.96	.94
550	[37.9]	480	[249]												.97	.97	.97	.95
600	[41.4]	489	[254]												.97	.97	.97	.97
650	[44.8]	497	[258]													1.00	.99	.97
700	[48.3]	506	[263]													1.00	.99	.97
750	[51.7]	513	[267]													1.00	1.00	.98
800	[55.2]	520	[271]														1.00	.99
850	[58.6]	527	[275]														1.00	.99
900	[62.1]	533	[278]														1.00	1.00
950	[65.5]	540	[282]															1.00
1000	[69.0]	546	[286]															1.00
1050	[72.4]	552	[289]															1.00
1100	[75.9]	558	[292]															
1150	[79.3]	563	[295]															
1200	[82.7]	569	[298]															

Note

Revised capacity for “Super Heat Steam:” multiply capacity of Valve x Factor noted above.

Copyright © 2011 Tyco Flow Control. All rights reserved.

Valve Sizing

Table B - Steam Super Heat Correction Factor, K_{sh}

Set Pressure psig	[barg]	Saturated Steam Temp. °F	[°C]	Total Steam Temperature °F [°C] 580 [305]	600 [316]	620 [326]	640 [338]	660 [349]	680 [360]	700 [371]	720 [382]	740 [393]	760 [405]	780 [416]	800 [427]	900 [482]	1000 [537]	1100 [593]
15	[1.03]	250	[121]	.89	.88	.87	.86	.86	.85	.84	.83	.83	.82	.81	.81	.78	.75	.72
20	[1.38]	259	[126]	.89	.88	.87	.86	.86	.85	.84	.83	.83	.82	.81	.81	.78	.75	.72
40	[2.40]	287	[142]	.89	.88	.87	.87	.86	.85	.84	.84	.83	.82	.82	.81	.78	.75	.72
60	[4.14]	308	[153]	.89	.88	.87	.87	.86	.85	.84	.84	.83	.82	.82	.81	.78	.75	.72
80	[5.52]	324	[162]	.89	.89	.88	.87	.86	.85	.84	.84	.83	.82	.82	.81	.78	.75	.72
100	[6.90]	338	[170]	.90	.89	.88	.87	.86	.85	.85	.84	.83	.82	.82	.81	.78	.75	.72
120	[8.27]	350	[177]	.90	.89	.88	.87	.86	.85	.85	.84	.83	.82	.82	.81	.78	.75	.72
140	[9.65]	361	[183]	.90	.89	.88	.87	.86	.85	.85	.84	.83	.82	.82	.81	.78	.75	.72
160	[11.0]	371	[188]	.90	.89	.88	.87	.86	.86	.85	.84	.83	.82	.82	.81	.78	.75	.72
180	[12.4]	380	[193]	.90	.89	.88	.87	.86	.86	.85	.84	.83	.82	.82	.81	.78	.75	.72
200	[13.8]	388	[198]	.90	.89	.88	.87	.86	.86	.85	.84	.83	.83	.82	.81	.78	.75	.72
220	[15.2]	395	[201]	.91	.90	.89	.88	.87	.86	.85	.84	.8	.83	.82	.81	.78	.75	.72
240	[16.6]	403	[206]	.91	.90	.89	.88	.87	.86	.85	.84	.84	.83	.82	.81	.78	.75	.72
260	[17.9]	409	[209]	.91	.90	.89	.88	.87	.86	.85	.85	.84	.83	.82	.81	.78	.75	.72
280	[19.3]	416	[213]	.91	.90	.91	.88	.87	.86	.85	.85	.84	.83	.82	.82	.78	.75	.72
300	[20.7]	422	[217]	.91	.90	.89	.88	.87	.86	.86	.85	.84	.83	.82	.82	.78	.75	.72
350	[24.1]	436	[224]	.92	.91	.90	.89	.88	.87	.86	.85	.84	.83	.83	.82	.78	.76	.72
400	[27.6]	448	[231]	.92	.91	.90	.89	.88	.87	.86	.85	.84	.84	.83	.82	.79	.76	.72
450	[31.0]	460	[238]	.93	.92	.91	.89	.88	.87	.86	.86	.85	.84	.83	.82	.79	.76	.72
500	[34.5]	470	[243]	.93	.92	.91	.90	.89	.88	.87	.86	.85	.84	.83	.82	.79	.76	.73
550	[37.9]	480	[249]	.94	.92	.91	.90	.89	.88	.87	.86	.85	.84	.83	.82	.79	.76	.73
600	[41.4]	489	[254]	.94	.93	.92	.90	.89	.88	.87	.86	.85	.84	.84	.83	.79	.76	.73
650	[44.8]	497	[258]	.95	.94	.92	.91	.90	.89	.87	.86	.86	.85	.84	.83	.79	.76	.73
700	[48.3]	506	[263]	.96	.94	.93	.91	.90	.89	.88	.87	.86	.85	.84	.83	.79	.76	.73
750	[51.7]	513	[267]	.96	.95	.93	.92	.90	.89	.88	.87	.86	.85	.84	.83	.79	.76	.73
800	[55.2]	520	[271]	.97	.95	.94	.92	.91	.90	.88	.87	.86	.85	.84	.84	.80	.76	.73
850	[58.6]	527	[275]	.98	.96	.94	.93	.92	.90	.89	.88	.87	.86	.85	.84	.80	.76	.73
900	[62.1]	533	[278]	.99	.97	.95	.93	.92	.90	.89	.88	.87	.86	.85	.84	.80	.77	.73
950	[65.5]	540	[282]	.99	.97	.95	.94	.92	.91	.89	.88	.87	.86	.85	.84	.80	.77	.73
1000	[69.0]	546	[286]	.99	.98	.96	.94	.93	.91	.90	.89	.87	.86	.85	.84	.80	.77	.73
1050	[72.4]	552	[289]	1.00	.99	.97	.95	.93	.92	.90	.89	.88	.87	.86	.85	.80	.77	.73
1100	[75.9]	558	[292]	1.00	.99	.98	.95	.94	.92	.91	.89	.88	.87	.86	.85	.81	.77	.73
1150	[79.3]	563	[295]	1.00	.99	.98	.96	.94	.92	.91	.90	.88	.87	.86	.85	.81	.77	.73
1200	[82.7]	569	[298]	1.00	.99	.98	.97	.95	.93	.91	.90	.89	.87	.86	.85	.81	.77	.73

Note

Revised capacity for “Super Heat Steam:” multiply capacity of Valve x Factor noted above.

Copyright © 2011 Tyco Flow Control. All rights reserved.

Valve Sizing

Table C - Air and Gas Temperature Correction Factors

Temperature °F	Tc	Temperature °F	Tc	Temperature °F	Tc	Temperature °F	Tc
0	1.062	90	0.972	260	0.849	440	0.760
10	1.051	100	0.964	280	0.838	460	0.752
20	1.041	120	0.947	300	0.828	480	0.744
30	1.030	140	0.931	320	0.817	500	0.737
40	1.020	160	0.916	340	0.806	550	0.718
50	1.009	180	0.902	360	0.796	600	0.701
60	1.000	200	0.888	380	0.787	650	0.685
70	0.991	220	0.874	400	0.778	700	0.669
80	0.981	240	0.862	420	0.769	750	0.656

For temperatures other than 60°F at valve inlet, multiply standard SCFM by Tc.

Table D - Gas and Liquid Relative Density Correction Factors

Specific Gravity	Dc	Specific Gravity	Dc	Specific Gravity	Dc	Specific Gravity	Dc
0.07	3.770	0.60	1.290	1.05	0.975	1.70	0.768
0.08	3.530	0.65	1.240	1.10	0.955	1.80	0.745
0.09	3.333	0.70	1.195	1.15	0.933	1.90	0.725
0.10	3.160	0.75	1.155	1.20	0.913	2.00	0.707
0.20	2.240	0.80	1.117	1.25	0.895	2.50	0.633
0.30	1.825	0.85	1.085	1.30	0.877	3.00	0.577
0.40	1.580	0.90	1.055	1.40	0.845	3.50	0.535
0.50	1.414	0.95	1.025	1.50	0.817	4.00	0.500
0.55	1.350	1.00	1.000	1.60	0.791	4.50	0.471

For a specific gravity other than air or water (=1.0), multiply CFM or GPM by Dc.

Copyright © 2011 Tyco Flow Control. All rights reserved.

Valve Sizing

Physical Properties

Gas or Vapor	M Molecular Weight	k Specific Heat Ratio	C Gas Constant
Acetone	58.08	1.12	329
Acetylene (Ethyne)	26.04	1.26	343
Air	28.97	1.40	356
Ammonia, Anhydrous	17.03	1.31	348
Argon	39.95	1.67	378
Benzene (Benzol or Benzole)	78.11	1.12	329
Boron Trifluoride	67.82	1.20	337
Butadiene-1,3 (Divinyl)	54.09	1.12	329
Butane-n (Normal Butane)	58.12	1.09	326
Butylene (1-Butene)	56.11	1.11	328
Carbon Dioxide	44.01	1.29	346
Carbon Disulfide (C. Bisulfide)	76.13	1.21	33
Carbon Monoxide	28.01	1.40	356
Carbon Tetrachloride	153.82	1.11	328
Chlorine	70.91	1.36	353
Chloromethane (Methyl Chloride)	50.49	1.28	345
Cyclohexane	84.16	1.09	326
Cyclopropane (Trimethylene)	42.08	1.11	328
Decane-n	142.29	1.04	320
Diethylene Glycol (DEG)	106.17	1.07	323
Dimethyl Ether (Methyl Ether)	46.07	1.11	328
Dowtherm A	165.00	1.05	321
Dowtherm E	147.00	1.00	315
Ethane	30.07	1.19	336
Ethyl Alcohol (Ethanol)	46.07	1.13	330
Ethylene (Ethene)	28.05	1.24	341
Ethylene Glycol	62.07	1.09	326
Ethylene Oxide	44.05	1.21	338
Fluorocarbons:			
12, Dichlorodifluoromethane	120.93	1.14	331
13, Chlorotrifluoromethane	104.47	1.17	334
13B1, Bromotrifluoromethane	148.93	1.14	331
22, Chlorodifluoromethane	86.48	1.18	335
115, Chloropentafluoroethane	154.48	1.08	324
Glycerine (Glycerin or Glycerol)	92.10	1.06	322
Helium	4.00	1.67	378
Heptane	100.21	1.05	321

Copyright © 2011 Tyco Flow Control. All rights reserved.

Valve Sizing

Physical Properties

Gas or Vapor	M Molecular Weight	k Specific Heat Ratio	C Gas Constant
Hexane	86.18	1.06	322
Hydrogen	2.02	1.41	357
Hydrogen Chloride, Anhydrous	36.46	1.41	357
Hydrogen Sulfide	34.08	1.32	349
Isobutane (2-Methylpropane)	58.12	1.10	327
Isoprene (2-Methyl-1, 3 Butadiene)	68.12	1.09	326
Isopropyl Alcohol (Isopropanol)	60.10	1.09	326
Krypton	83.80	1.71	380
Methane	16.04	1.31	348
Methyl Alcohol (Methanol)	32.04	1.20	337
Methylamines, Anhydrous			
Monomethylamine (Methylamine)	31.06	1.02	317
Dimethylamine	45.08	1.15	332
Trimethylamine	59.11	1.18	335
Methyl Mercapton (Methanethiol)	48.11	1.20	337
Naphthalene (Napthaline)	128.17	1.07	323
Natural Gas (specific gravity = 0.60)	17.40	1.27	344
Neon	20.18	1.64	375
Nitrogen	28.01	1.40	356
Nitrous Oxide	44.01	1.30	347
Octane	114.23	1.05	321
Oxygen	32.00	1.40	356
Pentane	72.15	1.07	323
Propadiene (Allene)	40.07	1.69	379
Propane	44.10	1.13	330
Propylene (Propene)	42.08	1.15	332
Propylene Oxide	58.08	1.13	330
Styrene	104.15	1.07	323
Sulfur Dioxide	64.06	1.28	345
Sulfur Hexafluoride	146.05	1.09	326
Steam	18.02	1.31	348
Toluene (Toluol or Methylbenzene)	92.14	1.09	326
Triethylene Glycol (TEG)	150.18	1.04	320
Vinyl Chloride Monomer (VCM)	62.50	1.19	336
Xenon	131.30	1.65	376
Xylene (p-Xylene)	106.17	1.07	323

Copyright © 2011 Tyco Flow Control. All rights reserved.

Valve Sizing

Physical Properties

Liquid	G Specific Gravity Water = 1	°F	°C
Acetaldehyde	0.779	68	20
Acetic Acid	1.051	68	20
Acetone	0.792	68	20
Ammonia, Anhydrous	0.666	68	20
Automotive Crankcase and Gear Oils:			
SAE-5W Through SAE 150	0.88-0.94	60	15.6
Beer	1.01	60	15.6
Benzene (Benzol)	0.880	68	20
Boron Trifluoride	1.57	-148	-100
Butadiene - 1, 3	0.622	68	20
Butane-n (Normal Butane)	0.579	68	20
Butylene (1-Butene)	0.600	68	20
Carbon Dioxide	1.03	-4	-20
Carbon Disulfide (C. Bisulfide)	1.27	68	20
Carbon Tetrachloride	1.60	68	20
Chlorine	1.42	68	20
Chloromethane (Methyl Chloride)	0.921	68	20
Crude Oils:			
32.6 Deg API	0.862	60	15.6
35.6 Deg API	0.847	60	15.6
40 Deg API	0.825	60	15.6
48 Deg API	0.79	60	15.6
Cyclohexane	0.780	68	20
Cyclopropane (Trimethylene)	0.621	68	20
Decane-n	0.731	68	20
Diesel Fuel Oils	0.82-0.95	60	15.6
Diethylene Glycol (DEG)	1.12	68	20
Dimethyl Ether (Methyl Ether)	0.663	68	20
Dowtherm A	0.998	68	20
Dowtherm E	1.087	68	20
Ethane	0.336	68	20
Ethyl Alcohol (Ethanol)	0.79	68	20
Ethylene (Ethene)	0.569	-155	-104
Ethylene Glycol	1.115	68	20
Ethylene Oxide	0.901	68	20

Copyright © 2011 Tyco Flow Control. All rights reserved.

Valve Sizing

Physical Properties

Liquid	G Specific Gravity Water = 1	°F	°C
Fluorocarbons:			
R12, Dichlorodifluoromethane	1.34	68	20
R13, Chlorotrifluoromethane	0.916	68	20
R13B1, Bromotrifluoromethane	1.58	68	20
R22, Chlorodifluoromethane	1.21	68	20
R115, Chloropentafluoromethane	1.31	68	20
Fuel Oils, Nos. 1, 2, 3, 5 and 6	0.82-0.95	60	15.6
Gasolines	0.68-0.74	60	15.6
Glycerine (Glycerin or Glycerol)	1.26	68	20
Heptane	0.685	68	20
Hexane	0.660	68	20
Hydrochloric Acid	1.64	60	15.6
Hydrogen Sulfide	0.78	68	20
Isobutane (2-Methylpropane)	0.558	68	20
Isoprene (2-Methyl - 1, 3-Butadiene)	0.682	68	20
Isopropyl Alcohol (Isopropanol)	0.786	68	20
Jet Fuel (average)	0.82	60	15.6
Kerosene	0.78-0.82	60	15.6
Methyl Alcohol (Methanol)	0.792	68	20
Methylamines, Anhydrous:			
Monomethylamine (Methylamine)	0.663	68	20
Dimethylamine	0.656	68	20
Trimethylamine	0.634	68	20
Methyl Mercapton (Methanethiol)	0.870	68	20
Nitric Acid	1.50	60	15.6
Nitrous Oxide	1.23	-127	-88.5
Octane	0.703	68	20
Pentane	0.627	68	20
Propadiene (Allene)	0.659	-30	-34.4
Propane	0.501	68	20
Propylene (Propene)	0.514	68	20
Propylene Oxide	0.830	68	20
Styrene	0.908	68	20
Sulfur Dioxide	1.43	68	20

Copyright © 2011 Tyco Flow Control. All rights reserved.

Valve Sizing

Physical Properties

Liquid	G Specific Gravity Water = 1	°F	°C
Sulfur Hexafluoride	1.37	68	20
Sulfuric Acid:			
95–100%	1.839	68	20
60%	1.50	68	20
20%	1.14	68	20
Toluene (Toluol or Methylbenzene)	0.868	68	20
Triethylene Glycol (TEG)	1.126	68	20
Vinyl Chloride Monomer (VCM)	0.985	-4	-20
Water, fresh	1.00	68	20
Water, sea	1.03	68	20
Xylene (p-Xylene)	0.862	68	20

Sizing - Determining K_v and K_w

U.S. Units

$$R = \frac{V_L\,(2{,}800\ G)}{\mu\sqrt{A}}$$

or

$$R = \frac{12{,}700\ V_L}{U\sqrt{A}}$$

Metric Units

$$R = \frac{31{,}313\ V_L\ G}{\mu\sqrt{A}}$$

Determining K_v

V_L = Flow rate at the flowing temperature, in U.S. gpm [m³/hr]

V_L = Flow rate at the flowing temperature, in U.S. gpm [m³/hr]

G = Specific gravity of liquid at flowing temperature referred to water = 1.00 at 70°F [21°C]

μ = Absolute viscosity at the flowing temperature, in centipoises

A = Effective discharge area, in square inches [cm²] (from manufacturer's standard orifice areas)

U = Viscosity at the flowing temperature, in Saybolt Universal seconds

After the value of R is determined, the factor K_V is obtained from the graph. Factor K_V is applied to correct the "preliminary required discharge area." If the corrected area exceeds the "chosen standard orifice area," the calculations should be repeated using the next larger standard orifice size.

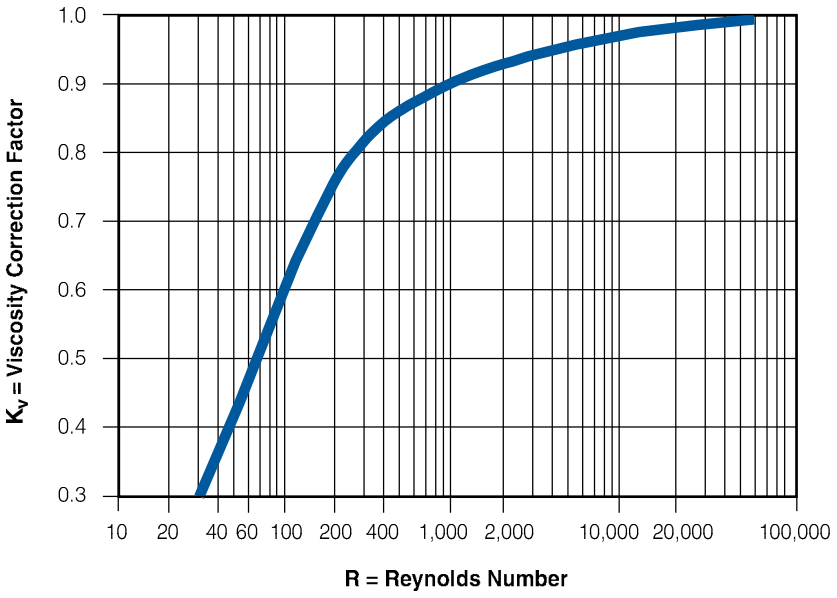

Copyright © 2011 Tyco Flow Control. All rights reserved.

Conversion Factors

Absolute Viscosity

Given	To find desired value, multiply "Given" value by factor below			
	poise	Centipoise	$\frac{gm}{cm-sec}$	$\frac{lb}{ft-sec}$
poise	—	100	1	0.0672
centipoise	0.01	—	0.01	0.000672
$\frac{gm}{cm-sec}$	1	100	—	0.0672
$\frac{lb}{ft-sec}$	14.88	1488	14.88	—

Notes

1. Kinematic viscosity x specific gravity = absolute viscosity.
2. Centistokes x specific gravity = centipoise.
3. Saybolt Second Universal (SSU) x 0.216 x specific gravity = centipoise.

Kinematic Viscosity

Given	To find desired value, multiply "Given" value by factor below			
	stoke	Centistoke	$\frac{cm^2}{sec}$	$\frac{ft^2}{sec}$
stoke	—	100	1	0.001076
centistoke	0.01	—	0.01	1.076 x 10-5
$\frac{cm2}{sec}$	1	100	—	0.001076
$\frac{ft2}{sec}$	929.0	92900	929.0	—

Liquid Flow Conversions

Given	To find desired value, multiply "Given" value by factor below				
	l/hr	gpm - US	gpm - Imp	barrels/day	m^3/hr
l/hr (litres/hour)	—	0.00440	0.003666	0.1510	0.0010
gpm (US gallons per minute)	227.1	—	0.8327	34.29	0.2271
gpm (Imperial gallons per minute)	272.8	1.201	—	41.18	0.2728
barrels/day (petroleum - 42 US gallons)	6.624	0.02917	0.02429	—	0.006624
m^33/hr (cubic meters per hour)	1000	4.403	3.666	151.0	—
m^3/s (cubic meters per second)	3.6×10^6	0.02917	0.02429	—	0.006624
kg/hr (kilograms per hour)	$\frac{1}{G}$	$\frac{1}{227.1G}$	$\frac{1}{272.8G}$	$\frac{0.151}{G}$	$\frac{1}{1000G}$
lb/hr (pounds per hour)	$\frac{1}{2.205G}$	$\frac{1}{500.8G}$	$\frac{1}{601.5G}$	$\frac{1}{14.61G}$	$\frac{1}{2205G}$

Note

1. G = Specific gravity of liquid at its relieving temperature compared to that of water at 68°F [20°C], where $G_{water} = 1.00$.

Copyright © 2011 Tyco Flow Control. All rights reserved.

Conversion Factors

Notes

1. M = Molecular weight of vapor or gas.
2. Volumetric flow (per time unit of hour or minute as shown) in standard cubic feet per minute at 14.7 psia [1.013 bara], 60°F [16°C].
3. Weight flow in pounds per hour.
4. Weight flow in kilograms per hour.
5. Volumetric flow (per time unit of hour or minute as shown) at 1.013 bara 32°F [0°C]. This represents the commercial standard, known as the Normal Temperature and Pressure (NTP).

   Conversions from one volumetric flow rate to another or to weight flow (and vice versa) may only be done when the volumetric flow is expressed in the standard conditions shown above. If flows are expressed at temperature or pressure bases that differ from those listed above, they must first be converted to the standard base.

Gas Flow Conversions

Given	To find desired value, multiply "Given" value by factor below					
	SCFM	SCFH	lb/hr	[kg/hr]	[Nm³/hr]	[Nm³/min]
scfm[2]	—	60	$\frac{M}{6.32}$	$\frac{M}{13.93}$	1.608	0.0268
scfh[2]	0.01677	—	$\frac{M}{379.2}$	$\frac{M}{836.1}$	0.0268	0.000447
lb/hr[3] or #/hr[3]	$\frac{6.32}{M}$	$\frac{379.2}{M}$	—	0.4536	$\frac{10.17}{M}$	$\frac{0.1695}{M}$
kg/hr[4]	$\frac{13.93}{M}$	$\frac{836.1}{M}$	2.205	—	$\frac{22.40}{M}$	$\frac{0.3733}{M}$
Nm³/hr[5]	0.6216	37.30	$\frac{M}{10.17}$	$\frac{M}{22.40}$	—	0.01667
Nm³/min[5]	37.30	2238	5.901 M	2.676 M	60	—

If flow is expressed in actual volume, such as cfm (cubic feet per minute) or acfm (actual cfm) as is often done for compressors, where the flow is described as displacement or swept volume, the flow may be converted to scfm as follows (or from flow expressed in m³/hr to Nm³/hr).

Inch-Pound Units

$$SCFM = \left(\begin{matrix}cfm \\ or \\ acfm\end{matrix}\right) x \frac{14.7 + p}{14.7} \times \frac{520}{460 + t}$$

Where:

p = gauge pressure of gas or vapor in psig

t = temperature of gas or vapor in °F

Metric Units

$$Nm^3/hr = m^3hr = x \frac{1.013 + p}{1.013} \times \frac{273}{273 + t}$$

Where:

p = gauge pressure of gas or vapor in barg

t = temperature of gas or vapor in °C

Notes

1. Also expressed as kp/cm² and kgf/cm².
2. Normal Temperature and Pressure (NTP) Conditions are, at sea level, equal to 1.013 bara or 1.033 kg/cm² (kilograms force per square centimeter absolute) at a base temperature of 32°F [0°C]. This differs slightly from Metric Standard Conditions (MSC), which uses 1.013 bara 60°F [15°C] for the base temperature.
3. Inch-Pound Standard Conditions are, at sea level, equal to 14.7 psia (pounds force per square inch absolute), rounded up from 14.696 psia, and at a base temperature of 60°F [16°C].

Pressure Conversion

Given	To find desired value, multiply "Given" value by factor below			
	kPa	psig	kg/cm²	barg
kPa (kilopascal)	—	0.1450	0.0102	0.0100
psig (pounds/in²)[3]	6.895	—	0.0703	0.06895
kg/cm²[1](kilograms/cm²)	98.07	14.22	—	0.9807
barg	100.00	14.50	1.020	—

Area Conversion

Given	To find desired value, multiply "Given" value by factor below			
	in²	ft²	mm²	cm²
in²	—	0.006944	645.16	6.4516
cm²	0.155	1.076×10^{-3}	100	—
ft²	144	—	92900	929
mm²	0.00155	1.076×10^{-5}	—	0.01

Temperature Conversion

Degrees Celsius (°C)	Degrees Fahrenheit (°F)
C + 273.15 = K (Kelvin)	F + 459.67 = R (Rankine)
(C x 1.8) + 32 = F (Fahrenheit)	(F - 32) x 0.556 = C (Celsius)

Copyright © 2011 Tyco Flow Control. All rights reserved.

Installation

1. Before installing a new safety/relief valve, we recommend that a pipe tap be used to assure clean-cut and uniform threads in the vessel opening and to allow for normal hand engagement followed by a half to one turn by wrench.
2. Install the valve in a vertical position so that discharge piping and code required drains can be properly piped to prevent build-up of back pressure and accumulation of foreign material around the valve seat area.
3. Avoid over-tightening as this can distort safety/relief valve seats. One need only remember that as the vessel and valve are heated, the expansion involved will grasp the valve more firmly.
4. When installing flange connected valves, use new gaskets and draw the mounting bolts down evenly.
5. Do not use the valve outlet or cap as a lever for installation. Use only flat jawed wrenches on the flats provided.
6. Avoid excessive "popping" of the safety/relief valve as even one opening can provide a means for leakage. Safety/relief valves should be operated only often enough to assure that they are in good working order.
7. Avoid wire, cable, or chain pulls for attachment to levers that do not allow a vertical pull. The weight of these devices should not be directed to the safety/relief valve.
8. Avoid having the operating pressure too near the safety/relief valve set pressure. A very minimum differential of 5 psig or 10 percent (whichever is greater) is recommended. An even greater differential is desirable, when possible, to assure better seat tightness and valve longevity. Safety/relief valves in high-temperature hot water and organic fluid service are more susceptible to damage and leakage than safety valves for steam. It is recommended that the maximum allowable working pressure of the boiler and the safety/relief valve setting be selected substantially higher than the operating pressure. A differential of 30-40 percent is recommended.
9. Avoid discharge piping where its weight is carried by the safety/relief valve. Even though supported separately, changes in temperature alone can cause piping strain. We recommend that drip pan elbows or flexible connections be used wherever possible (see Type A, B, C Installation, page 29).
10. Apply a moderate amount of pipe compound to male threads only, leaving the first thread clean. Compound applied to female threads or used to excess can find its way into the valve, causing leakage.

Copyright © 2011 Tyco Flow Control. All rights reserved.

Installation

Recommended Discharge Installation

Type "A" Installation

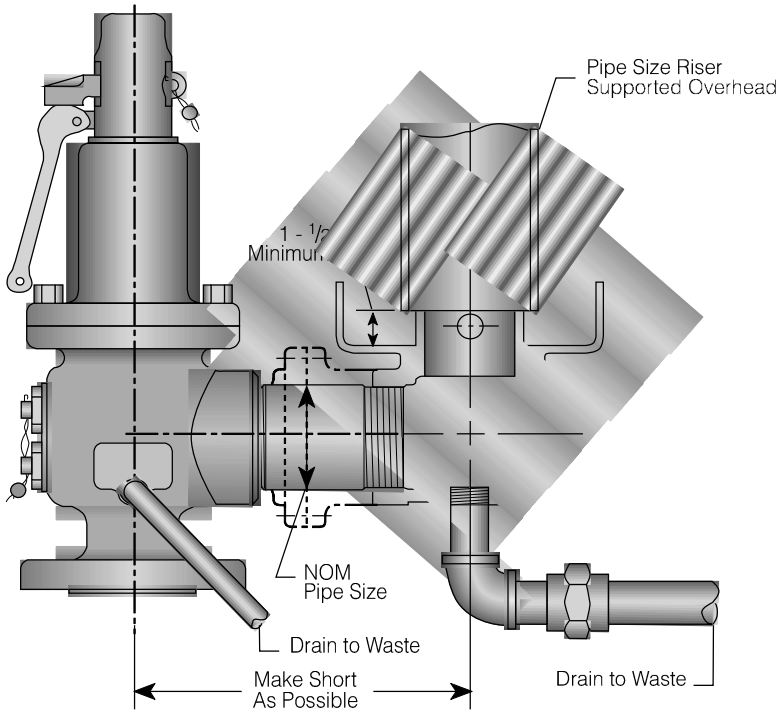

Type "B" Installation

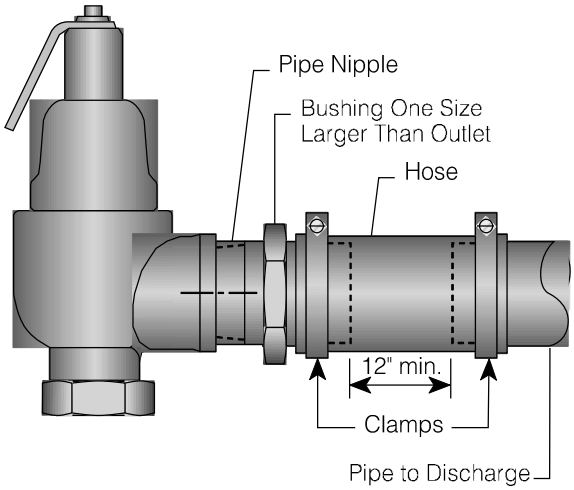

Type "C" Installation

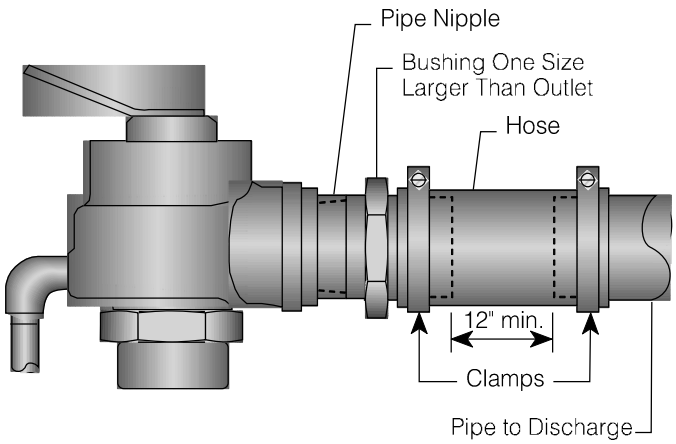

Copyright © 2011 Tyco Flow Control. All rights reserved.

Maintenance

1. Develop a regular program of visual inspection, looking for clogged drains and discharge pipe, dirt build-up in and around the valve seat and broken or missing parts.
2. Test the valve every two to six months (depending on valves' age and condition) preferably by raising the system pressure to the valves set pressure or operating the hand lever (see #3 in Operation).
3. Do not paint, oil, or otherwise cover any interior or working parts of any safety valve. They do not require any lubrication or protective coating to work properly.

When safety/relief valves require repair, service adjustments, or set pressure changes, work shall be accomplished by the manufacturer, or holders of "V," "UV," and/or "VR" stamps.

Guarantee

Tyco Valves & Controls LP, Black Mountain (Kunkle) warrants only that the goods delivered hereunder when paid for and properly installed, operated, and maintained shall be free from defects in material and workmanship under normal use and service for a period of twelve (12) months from the date of installation by the first user of such goods or eighteen (18) months from date of shipment from the factory, whichever period shall be first completed. The warranty hereunder granted does not apply to products or components (such as electric or pneumatic mechanisms) manufactured by other companies or to any goods manufactured by Tyco Valves & Controls LP, Black Mountain (Kunkle) that have been subjected to misuse, improper installation, improper storage or protection prior to installation or use, negligence by buyer or user, accident, corrosion, chemical attack, or misapplication, or that have been modified or repaired by unauthorized persons. Tyco Valves & Controls LP, Black Mountain's (Kunkle) obligation and buyer's remedy under this warranty are limited to: (a) correction, repair, or replacement, at Tyco Valves & Controls LP, Black Mountain's (Kunkle) option, of any defective unit of goods or (b) refund to buyer of the purchase price allocable to the defective unit of goods if Tyco Valves & Controls LP, Black Mountain (Kunkle) is unable to repair, replace or correct such defect in a reasonable time. Tyco Valves & Controls LP, Black Mountain's (Kunkle) liability under this warranty is conditioned upon buyer giving Tyco Valves & Controls LP, Black Mountain (Kunkle) immediate (but in any event within five (5) working days) written notice of any such defect. Any goods repaired or replaced hereunder shall continue to be warranted for the remainder of the unexpired warranty period, if any. Any repair or replacement of defective goods or parts shall, at Tyco Valves & Controls LP, Black Mountain's (Kunkle) option, occur at its plant in Black Mountain, North Carolina and Tyco Valves & Controls LP, Black Mountain (Kunkle) shall reimburse buyer all reasonable freight costs incurred in transporting defective goods or parts to and from Tyco Valves & Controls LP, Black Mountain's (Kunkle) plant in the event of a valid warranty claim. In the event Tyco Valves & Controls LP, Black Mountain (Kunkle) elects to provide replacement goods or parts to buyer to repair defective goods, buyer agrees to install sold replacement parts or goods at its cost and, further, Tyco Valves & Controls LP, Black Mountain (Kunkle) shall in no event be liable for any labor or material costs of buyer with respect to de-installing or repairing defective goods or installing replacement parts or goods. Tyco Valves & Controls LP, Black Mountain (Kunkle) shall have the option of requiring the return of the defective goods or parts thereof, transportation prepaid, to establish the claim. Tyco Valves & Controls LP, Black Mountain (Kunkle) shall not be held liable for damages caused by delays in repair or replacement of any defective items. Certification by a separate writing as to compliance with specifications, blueprints, part numbers, quality tests or otherwise will not create any warranty by or obligation of Tyco Valves & Controls LP, Black Mountain (Kunkle) The provisions in Tyco Valves & Controls LP, Black Mountain's (Kunkle) literature and specifications are descriptive only, unless expressly stated as warranties. Except for the limited express warranty set forth in this section, Tyco Valves & Controls LP, Black Mountain (Kunkle) expressly disclaims all warranties, express and implied, oral and written, including, without limitation, any warranties regarding services rendered ancillary hereto, and the implied warranties of merchantability and fitness for a particular purpose, whether arising from statute, common law, civil code, custom or otherwise. Tyco Valves & Controls LP, Black Mountain's (Kunkle) warranty obligations and buyer's remedies for breach of warranty, except as to title, are solely and exclusively as stated in this section. No modification or addition to this document with respect to the foregoing warranty by Tyco Valves & Controls LP, Black Mountain (Kunkle), either before or after execution of this document, shall be made except in writing by the President, Vice President, or Director, Sales and Marketing of Tyco Valves & Controls LP, Black Mountain (Kunkle).

Copyright © 2011 Tyco Flow Control. All rights reserved.

Terms and Conditions of Sales

1. Offer or Acceptance. If this document constitutes an offer to sell by Seller (sometimes referred to as 'Tyco Valves & Controls LP, Black Mountain (Kunkle)'), Seller's offer is expressly subject to Buyer's acceptance of all the terms and conditions contained herein and no other, unless otherwise mutually agreed to by both Seller and Buyer in a writing signed by both parties, and any response by Buyer which constitutes additional or different terms shall not operate as an acceptance if such acceptance would vary, delete or add to the terms and conditions contained herein. If this document constitutes an acceptance by Seller of Buyer's offer to buy the goods or services specified on the face hereof, such acceptance is expressly subject to all the terms and conditions contained herein and no others, unless otherwise mutually agreed to by both Seller and Buyer in a writing signed by both parties. Any of Buyer's proposed terms and conditions which are in addition to or different from those contained herein are hereby objected to and shall be of no effect. Buyer will in any event be deemed to have assented to all terms and conditions contained herein if any part of the goods sold hereunder are accepted.
2. Shipping Dates. The shipping dates, if any, set forth herein are approximate and are not guaranteed. Seller shall not be liable for any loss or damage for delay, non-delivery or other impairment of performance due to the actions or inactions of government, military authority, or Buyer, or by any reason of "force major," which shall be deemed to mean all other causes whatsoever not reasonably within the control of Seller, including, but not limited to, acts of God, war, riot, sabotage, fires, floods, strikes, lockouts or other industrial disturbances, delays of carriers, and inability to secure materials, fuel labor, transportation or manufacturing facilities at Seller's expected prices. Any delay resulting from any such cause shall extend shipping dates correspondingly. Seller shall in no event be liable for any special, incidental or consequential damages arising from delay irrespective of the reason thereof, and receipt by Buyer shall constitute acceptance of delivery and waiver of any claims due to delay. Should delivery be delayed due to Buyer's actions or inactions, or should delivery be delayed at the request of Buyer, the selling price of the goods shall automatically escalate at the rate of two percent [2%] per month for the duration of the delay or in an amount equal to Seller's increased cost, whichever is greater.
3. Drawings. If drawings are submitted herewith they are submitted only to show the general style, arrangement and approximate dimensions of the goods offered. No work is to be based on drawings unless the drawings are certified. Dimensional drawings certified by Seller will be furnished if agreed. In no event will manufacturing or proprietary drawings be supplied.
4. Risk of Loss. Buyer bears the risk of loss for damage to or destruction of the goods from and after the time same said goods are delivered either to the carrier for shipment to Buyer or to the Buyer, whichever occurs first, and regardless of whether or not Buyer may have the right to reject or revoke acceptance of said goods.
5. Shipment. If delivery specified is F.O.B. Seller's plant with freight allowed, Buyer shall pay to Seller, in addition to the purchase price, any and all transportation charges (including insurance).
6. Taxes. In addition to any prices specified herein, Buyer shall pay the gross amount of any present or future sales, use, excise, value-added, or other tax (whether federal, state, local or foreign) applicable to the price, sale, possession, or delivery of any goods or services furnished hereunder or to the use thereof by Buyer, or Buyer shall furnish Seller with a tax-exemption certificate acceptable to the levying taxing authority.
7. Payments. Buyer shall make payment in full for all goods ordered hereunder prior to shipment to Buyer, unless Buyer has entered into and agreed to Seller's Standard Credit Application and Agreement, in which event such Agreement is incorporated herein by reference and made a part hereof, unless and until such Agreement is terminated. The prices specified are in USA currency.
8. Warranties; Remedies. Tyco Valves & Controls LP, Black Mountain (Kunkle) warrants only that the goods delivered hereunder when paid for and properly installed, operated, and maintained shall be free from defects in material and workmanship under normal use and service for a period of twelve (12) months from the date of installation by the first user of such goods or eighteen (18) months from date of shipment from the factory, whichever period shall be first completed. The warranty hereunder granted does not apply to products or components (such as electric or pneumatic mechanisms) manufactured by other companies or to any goods manufactured by Tyco Valves & Controls LP, Black Mountain (Kunkle) that have been subjected to misuse, improper installation, improper storage or protection prior to installation or use, negligence by Buyer or user, accident, corrosion, chemical attack or misapplication, or that have been modified or repaired by unauthorized persons. Tyco Valves & Controls LP, Black Mountain's (Kunkle) obligation and Buyer's remedy under this warranty are limited to: (a) correction, repair, or replacement, at Tyco Valves & Controls LP, Black Mountain's (Kunkle) option, of any defective unit of goods or (b) refund to Buyer of the purchase price allocable to the defective unit of goods if Tyco Valves & Controls LP, Black Mountain (Kunkle) is unable to repair, replace or correct such defect in a reasonable time. Tyco Valves & Controls LP, Black Mountain's (Kunkle) liability under this warranty is conditioned upon Buyer giving Tyco Valves & Controls LP, Black Mountain (Kunkle), immediate (but in any event within five (5) working days) written notice of any such defect. Any goods repaired or replaced of defective goods or parts shall, at Tyco Valves & Controls LP, Black Mountain's (Kunkle) option, occur at its plant in Houston, Texas and Tyco Valves & Controls LP, Black Mountain (Kunkle) shall reimburse Buyer all reasonable freight costs incurred in transporting defective goods or parts to and from Tyco Valves & Controls LP, Black Mountain's (Kunkle) plant in the event of a valid warranty claim. In the event Tyco Valves & Controls LP, Black Mountain (Kunkle) elects to provide replacement good or parts to buyer to repair defective goods, Buyer agrees to install said replacement parts or goods at its cost and, further, Tyco Valves & Controls LP, Black Mountain (Kunkle), shall in no event be liable for any labor or material costs of Buyer with respect to de-installing or repairing defective goods or installing replacement parts or goods. Tyco Valves & Controls LP, Black Mountain (Kunkle) shall have the option of requiring the return of the defective goods or parts thereof, transportation prepaid, to establish the claim. Tyco Valves & Controls LP, Black Mountain (Kunkle) shall not be held liable for damages caused by delays in repair or replacement of any defective items. Certification by a separate writing as to compliance with specifications, blueprints, part numbers, quality test or otherwise will not create any warranty by or obligation of Tyco Valves & Controls LP, Black Mountain (Kunkle). The provisions in Tyco Valves & Controls LP, Black Mountain's (Kunkle) literature and specifications are descriptive only unless expressly stated as warranties. EXCEPT FOR THE LIMITED EXPRESS WARRANTY SET FORTH IN THIS SECTION, KUNKLE EXPRESSLY DISCLAIMS ALL WARRANTIES, EXPRESS AND IMPLIED, ORAL AND WRITTEN, INCLUDING, WITHOUT LIMITATION, AND FITNESS FOR A PARTICULAR PURPOSE, WHETHER ARISING FROM STATUTE, COMMON LAW, CIVIL CODE, CUSTOM OR OTHERWISE. KUNKLE'S WARRANTY OBLIGATIONS AND BUYER'S REMEDIES FOR BREACH OF WARRANTY, EXCEPT AS TO TITLE, ARE SOLELY AND EXCLUSIVELY AS STATED IN THIS SECTION. No modification or addition to this document with respect to the foregoing warranty by Tyco Valves & Controls LP, Black Mountain (Kunkle) either before or after execution of this document, shall be made except in writing by the President or a Vice President of Tyco Valves & Controls LP, Black Mountain (Kunkle).
9. Limitation of Liability. In any event, the total liability of Tyco Valves & Controls LP, Black Mountain (Kunkle) arising from any cause of action or claim whatsoever, whether (a) in contract, (b) in tort, (including negligence, whether sole, joint, contributory, concurrent or antipollution law or regulation), (c) connected with any toxic or hazardous substance or constituent, (d) arising out of any representation or instruction, or under any warranty, (e) or otherwise, arising out of, connected with, or resulting from the design, manufacture, sale, resale, delivery, repair, replacement or use of any goods or the furnishing of any service shall in no event exceed the price allocable to and paid to Tyco Valves & Controls LP, Black Mountain (Kunkle) for the individual unit of goods or services or part thereof which gives rise to the cause of action or claim. In no event shall Tyco Valves & Controls LP, Black Mountain (Kunkle) or its affiliates be liable for any special, indirect, incidental or consequential damages whenever occurring including, but not limited to, damages for loss of use of plant or property, damage to or destruction of equipment, downtime cost, cost of capital, economic loss, loss of good will, labor cost, loss of profits or revenues, or claims resulting from

Copyright © 2011 Tyco Flow Control. All rights reserved.

Terms and Conditions of Sales

contracts between Buyer, its customers and/or suppliers, regardless of whether any of the foregoing arises from this document or Tyco Valves & Controls LP, Black Mountain (Kunkle) by any human being for personal injury or wrongful death. Tyco Valves & Controls LP, Black Mountain (Kunkle) and Buyer acknowledge and agree that the exclusions of remedies and limitations of liability and damages herein reflect a bargained-for allocation and limitation of risk, liability and damages. Tyco Valves & Controls LP, Black Mountain (Kunkle) will not defend, indemnify or hold harmless Buyer or others for any claim, expense or liability. This Section shall apply notwithstanding any other provision of this document.

10. Limitation of Liability to Third-Party Purchases. Prior to Buyer's transfer or sale of any goods sold pursuant hereto, or the transfer or sale of any interest in such goods, Buyer shall notify the Transferee of the full text of Sections 8 and 9 hereof in writing and shall provide Seller with written acknowledgment and acceptance by the transferee of the terms of Sections 8 and 9 hereof. Further, Buyer shall incorporate verbatim Sections 8 and 9 hereof in any contract between Buyer and any Transferee concerning any such transfer or sale. Buyer shall also include a written copy of Section 8 and 9 hereof with any goods covered hereby that are transferred or sold to a transferee. IF TRANSFER IS MADE CONTRARY TO THE PROVISIONS OF THIS SECTION 10, BUYER SHALL, IN ADDITION TO ANY OTHER LEGAL OR EQUITABLE RIGHTS OF SELLER, INDEMNIFY SELLER AGAINST ANY LIABILITIES, CLAIMS, COSTS, DAMAGES AND ATTORNEY'S FEES INCURRED BY SELLER IN EXCESS OF THOSE SET FORTH IN SECTIONS 8 AND 9 HEREOF. This Section 10 shall apply notwithstanding any other provisions of this document.
11. Returns; Cancellations. No goods may be returned except on prior written approval of Seller. Orders placed with and accepted by Seller may not be canceled except with the written consent of Seller prior to shipment and Buyer's acceptance of Seller's cancellation charges which shall protect Seller against all costs and losses. Seller shall have the right to cancel the sale of any or all of the goods sold hereunder, without liability to Buyer except for the refund of monies already paid hereunder, the event manufacture or sale of the goods is or becomes technically or economically impractical.
12. Product Modification. Seller reserves the right to discontinue the manufacture of, or charge or modify the design and/or construction of goods sold pursuant to this document for the purpose of product improvement, without incurring any obligation to Buyer with respect thereto.
13. Patents. Seller agrees as its option, to defend at its safe cost and expense, and to pay any damages and cost awarded against Buyer, from any claim, suit or proceeding against Buyer to the extent such claim, suit or proceeding is based on an allegation that goods manufactured by Seller and delivered to Buyer hereunder infringe any United Sates letter patent, provided: (1) Seller is notified promptly in writing by Buyer of any such claim, suit or proceeding; (2) Seller is given information and assistance by Buyer as may be requested by Seller; and (3) Seller is given full authority (including authority to settle) by Buyer to conduct such defense as Seller deems appropriate. Seller's obligation under this Section does not apply to any goods the designs, instructions and/or specifications for which are partially or completely supplied by Buyer or to any claim, suit or proceeding in which the alleged infringement results from alteration of goods, use of goods for purposes other than those for which the goods were intended, or use of the goods in combination with products not manufactured by Seller. If in any suit covered by this Section, the use of goods is enjoined, Seller shall at its option and sole cost and expense either: (a) procure for Buyer the right to continue using the goods; (b) replace the goods with non-infringing goods; (c) modify the goods to be non-infringing; or (d) refund to Buyer the purchase price of the goods and transportation costs related thereto. Seller shall have no liability with respect to patent or trademark rights of countries foreign to the USA. The foregoing shall be Seller's sole and entire liability for patent infringement by the goods furnished pursuant hereto.
14. Data. Buyer agrees that all drawings, prints and other technical material (collectively 'Materials') which Seller provides to Buyer, whether prepared by Seller or by third parties under contract to Seller, contain data which embody trade secrets and confidential know-how of commercial value to Seller or to third parties under contract to Seller. Buyer agrees that Buyer and its agents and employees; (a) will keep confidential all such Materials; (b) will not disclose such Materials to any other person, corporate division or entity, except to employees of Buyer who need such Materials in order to perform Buyer's obligations hereunder; (c) will not use such Materials, except in connection with goods supplied hereunder; and (d) will not sell, lease, loan or permit any other person, corporate division or entity to use such Materials for any purpose, without Seller's prior written consent. Nothing herein shall restrict use of data or information available to the general public.
15. Applicable Law; Section Headlines. This document shall be deemed to have been executed and entered into the State of Texas, USA, and this document, and its formation, operation and performance, shall be governed, construed, performed and enforced in accordance with the substantive laws of the State of Texas, USA. The parties hereto agree that any civil action or lawsuit arising out of this document or the subject matter hereof shall be brought and maintained solely in state or federal courts located in Harris County, Texas, USA, and Buyer and Seller each hereby consents and submits to the personal jurisdiction of said courts. Any action or claim in any part arising out of or related to this document or the subject matter hereof, may be commenced or brought within one (1) year from the date the claim or action shall first arise or accrue, or be barred forever. The Section headings herein contained are for ease of reference only and shall not be construed to be part of this document.
16. Merger. Seller and Buyer agree that there are no understandings, agreements, representations or warranties between or by either of them, either oral or written, relative to the goods or services sold, pursuant hereto, including any made in or implied from past dealings, relative to the goods or services sold pursuant hereto, except those that are fully expressed herein. The provisions of this document supercede and control any previous understanding or agreement between the parties with respect to the subject matter hereof and this document is an expression of the complete and final understanding of the parties. Any representation, promise, course of dealing or trade usage not contained or referenced herein will not be binding on the parties hereto. Seller's branch managers or sales representatives, distributors, and dealers appointed by Seller are not authorized to make modifications, waivers or changes in or to these terms and conditions of sale. Buyer represents and agrees that it is Buyer's sole obligation and responsibility to determine the suitability of the goods for Buyer's use and application and any statements made by Seller's salespersons are opinion only and not representations or warranties of Seller and will not be relied on by the Buyer.

KUNKLE
953 Old U.S. Highway 70
Black Mountain, North Carolina 28711-2549
Customer Service Phone: 1-828-669-3700
www.kunklevalve.com

Tyco Flow Control (TFC) provides the information herein in good faith but makes no representation as to its comprehensiveness or accuracy. This data sheet is intended only as a guide to TFC products and services. Individuals using this data sheet must exercise their independent judgment in evaluating product selection and determining product appropriateness for their particular purpose and system requirements. TFC MAKES NO REPRESENTATIONS OR WARRANTIES, EITHER EXPRESS OR IMPLIED, INCLUDING WITHOUT LIMITATION ANY WARRANTIES OF MERCHANTABILITY OR FITNESS FOR A PARTICULAR PURPOSE WITH RESPECT TO THE INFORMATION SET FORTH HEREIN OR THE PRODUCT(S) TO WHICH THE INFORMATION REFERS. ACCORDINGLY, TFC WILL NOT BE RESPONSIBLE FOR DAMAGES (OF ANY KIND OR NATURE, INCLUDING INCIDENTAL, DIRECT, INDIRECT, OR CONSEQUENTIAL DAMAGES) RESULTING FROM THE USE OF OR RELIANCE UPON THIS INFORMATION. Patents and Patents Pending in the U.S.and foreign countries. Tyco reserves the right to change product designs and specifications without notice. All registered trademarks are the property of their respective owners. Printed in the USA.

Copyright © 2011 Tyco Flow Control. All rights reserved.

SP-0901 - Volute, Dewatering Press, MYDL-131

Type MYDL

Volute Sludge Dewatering

Instruction for Installation and Operation

BOEEP 江苏博一环保科技有限公司
Jiangsu BOE Environmental Protection Technology Co., Ltd.

E-1354

Welcome for your purchase

Thanks for your option of Type MYDL Volute Sludge Dewatering. This type of Volute Sludge Dewatering is widely used in different kinds of industries including municipal wastewater, food, drinks, slaughter and farming, printing and dyeing, paper, leather, pharmacy and so on. Please read this manual carefully, and be familiar with security matters, functions, installation and operation requirements at first, so that you are able to manipulate the equipment proficiently, which will create greater efficiency.

Important Note

File

This manual is written for the staffs that are responsible for operating and managing the equipment of Jiangsu BOE Environmental Protection Equipment & Engineering Co., Ltd in your company. So please be sure to pass the files to these people.

Receiving measures

Once the equipment arrived, appearance inspection should be taken at once.

Installation

The installation of the equipment and parts of Jiangsu BOE Environmental Protection Equipment & Engineering Co., Ltd was only allowed to be done by those persons with specialized training and technical who should also accord to the installation standard in random selection.

Structure Form

If the file data provided introduces several structure forms, only the relevant

information of the structure form in the contract is effective. Before delivery, we reserve the right to improve.

Starting-up and Debugging

Only the special trained persons can do the starting-up and debugging work. Before the first starting-up, the operator must be familiar with the all the instructions and procedures in the documents we provide, and fill with lube according to regulations.

Accident Prevention

The relevant accident prevention regulations we provide in the file must be studied carefully and observed strictly. Jiangsu BOEEP Environmental Protection Equipment & Engineering Co., Ltd strives to manufacture machine equipment according to the latest national safety standards.

Maintenance and Cleaning Work

Maintenance work can only be done by professionals, who should be familiar with regulations we provide in the document in advance. These regulations can help keep the machine equipment in good condition, reduce attrition and prolong service life!

Copyright

Jiangsu BOEEP Environmental Protection Equipment & Engineering Co., Ltd keeps the copyright of this data and the introduced contents. This book receiver should admit the copyright and should not offer it to a third party or use it for other purposes without the prior written approval of Jiangsu BOEEP Environmental Protection Equipment & Engineering Co., Ltd.

Quality Assurance

We are only responsible for the quality assurance within the scope of the contract, and be sure to use the authentic spare parts of Jiangsu BOEEP Environmental Protection Equipment & Engineering Co., Ltd. Our company will not be responsible for the loss created by using spare parts of other factories, improper operation, not comply with our operation procedures or wrong operation done by those non-professional workers.

Contents

Safety Announcements....1

- The warnings and main marks of the instructions....1
- Operating the dewaterer safely....1
- Relevant safety marks....3

The Confirming Matters of Receiving the Equipment....4

Generally Introduction about the Equipment....5

- The working principle of the dewaterer....5
- The basic working procedure of the dewaterer....6
- The names of each part....6

Transportation and Installing....9

- The equipment operating environment....9
- Equipment transportation and installation....9
- Piping....11
- Power wiring....12
- External power wiring....13

Using Methods of Each Part....15

- Electric control cabinet....15
- Frequency changer....18
- Timer....20
- Valve....22
- Backing pressboard....22

E-1359

◆ Liquid adjustment tube....23
◆ Emergency stop....25
The Method of Start Operation....27
◆ The examination before start operation....27
◆ Operation setting....29
◆ Formal operation....33
Automatically Operation....35
Manual Operation....36
Operation Adjustment....37
◆ About operation adjustment....37
Maintenance and Inspection....40
◆ Announcements for long-term stop....45
Fault or Not....47
◆ The disconnecting of thermal overload relays....47
◆ The error signal of frequency changer....48
◆ Confirming matters before consultation....48
About the Vulnerable Parts....57
Product Warranty Terms....59

Safety Announcements

◆ The warnings and main marks of the instructions

In order to nip in the bud, warnings and attentions will be used in the matters we must abide for the safety problems in this manual.

Warning	Improper operating could bring about danger, and even cause personal serious injury or death.
Attention	Improper operating could bring about danger, and even cause personal injury or other items damaged.

※The marks of attentions could cause personal serious injury or death, so each point is very important. Please confirm carefully before operating.

◆ Operating the dewaterer safely

In order to operate the dewaterer safely, please be sure to obey the following warnings and attentions. Improper operating can lead to machine damaged or function dropped.

Warning
• **Please do not operate under the explosive condition.** It could cause the explosion, fire, electric shock or machine damaged. • **Please let the staffs with professional knowledge and skills carry, set, wire, operate, maintain and inspect.** It may cause fire, electric shock or machine damaged. • **Please do not cut off electricity before wiring.** It may cause electric shock. • **Please don't disassemble, or reform the machine.** It may cause electric shock. • **Please be sure to cut off power supply before implement the work**

involving warnings and attentions.

People or things may be rolled in the machine and cause injury or machine seriously damaged.

Attention

- **Please operate the equipment within its scope, and choose corresponding flocculant and devices.**

  It may cause electric shock or machine damaged.

- **Please do not operate beyond its prescribed processing capacity (handling capacity, moisture content etc.)**

  It may cause the machine overload, and delicate devices abnormal damaged.

- **Please don't dewater sludge with more chlorine ion (such as sea water, salt mud, etc).**

  It may cause stainless steel corrosion, and the machine damaged. Please contact our company for dewatering the sludge with more chlorine ion according to the method of water ingress or the change of dealing with water.

- **Please do not use the flocculant with the main element of chloride ion (ferrous chloride, aluminium chloride, etc.).**

  If the flocculant with the main element of chloride ion is used, it may cause the stainless steel corrosion and the machine damaged. Please contact our company if the flocculant with the main element of chloride ion needs to be used according to the method of dealing with water or the change of sludge feature.

- **Please do not put hands or tools into the open place which may cause personal injury or machine damaged.**

- **Please do not operate the machine when the splash proof lid (the side lid) is open.**

  If operate the machine when the splash proof lid is open, it would make the sludge or flocculant splashed on staffs and cause damage. If you are cleaning or adjusting with the splash proof lid open, please be sure to wear protective gear.

- **Please do not take down the nameplate.**

- **If the customer resolve or reform the equipment by himself, our company will refuse to warrant.**
- **The normal rotational direction of screw shaft is counter-clockwise from the view of the mud cake outlet side. So without the guidance of the professional people of our company, you should not let the screw shaft rotate in clockwise direction. Otherwise it may cause the machine damaged.**

◆ Relevant safety marks

In order to operating the machine safely, the marks of warnings, danger and instructions have been put up in the particular part. Please understand the following marks sufficiently before operating.

	① **Warning: Be careful of electric shock** Wiring and operating electric control cabinet may cause electric shock. Don't touch electric wires or other electronic components.
	② **Danger: Be careful of rolling in** When the machine is operating, please do not put hands or tools into the rotational places. If hands or tools are rolled in, it may cause serious injury or even death.
	③ **Instruction: Wearing protective glasses** Please be sure to wear protective glasses when your work involves flocculant or with the check-out mouth open.

< The place with safety marks（Type MYDL-101）>

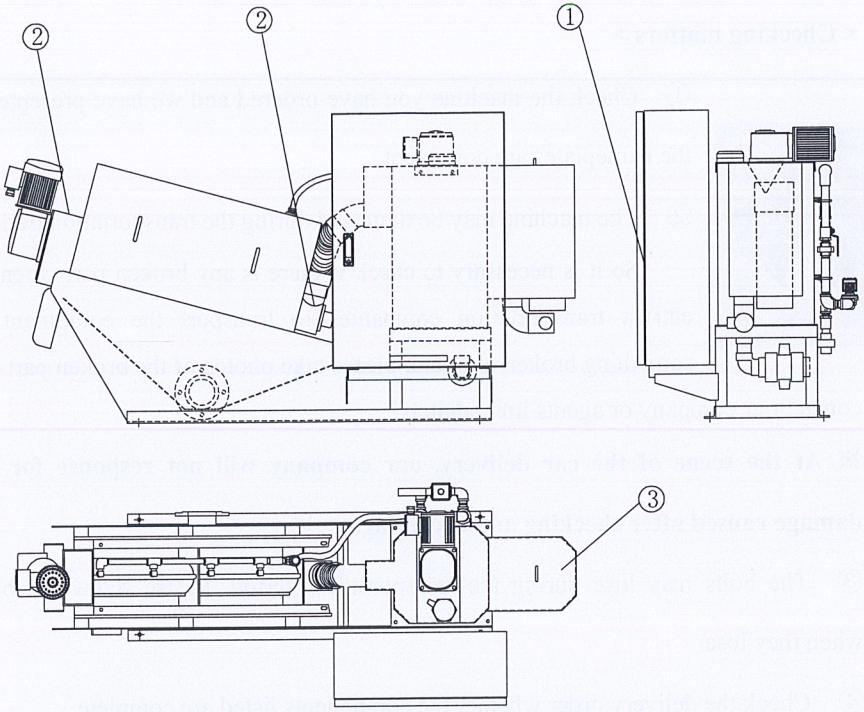

The Confirming Matters of Receiving the Equipment

Please confirm the following matters when you receive the equipment.

If the equipment is in unprepared, damaged or other unknown situations, please contact with our company or agents.

Attention
• Check-out whether the equipment is what you have ordered. The different configuration of the equipment may cause people injury or machine damaged.

< Checking matters >

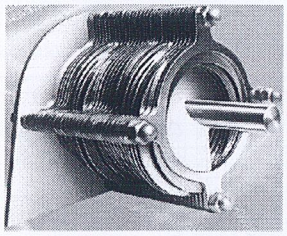

① Check the machine you have ordered and we have presented if the nameplates are consistent.

② The machine may be damaged during the transportation period. So it is necessary to check if there is any broken part when we entrust transportation companies to transport the equipment. If something broken is found, please take photos of the broken part and contact our company or agents immediately.

※ At the scene of the car delivery, our company will not response for the damage caused after checking and accepting.

③ The bolts may lose during the transportation period. Please screw the bolts when they lose.

④ Check the delivery order whether the components listed are complete

⑤ Check the machine whether it is equipped with hex wrench type T on its side.

Generally Introduction about the Equipment

◆ The working principle of the dewaterer

Dewaterer is a filter device whose volute body is a cylinder stacked by fixed annular plate and moveable annular plate with the screw shaft running through it. Because the inner diameter of the screw shaft is bigger than the moveable annular plate, the rotation of the screw shaft will drive the moveable annular plate to do circling motion to avoid block. The space between the fixed annular plate and the moveable annular plate becomes smaller and smaller gradually from the concentrate part to the dewatering part along the exporting direction of the mud cake. The sludge will be transported to the dewatering part after gravity concentrating in the concentrating

part, and then be forcibly dewatered under the internal pressure created by the portal platen.

◆ The basic working procedure of the dewaterer

1. The sludge will be transferred to the sludge transportation mouth through the sludge pump.
2. The sludge will be transferred to the flocculating and trough through the measuring trough after adjusting flow, and then fully mixed by the blender.
3. The sludge fully mixed by the blender forming the bigger flocs will be transferred to the volute body.
4. The flocs will both be gravity concentrated in the concentrating part and move to the dewatering part.
5. The space between the moveable annular plate and the fixed annular plate in the dewatering part will be narrower and narrower, and then dewatering by export further pressure through adjustment the platen located in the exit, finally discharge sludge cake.

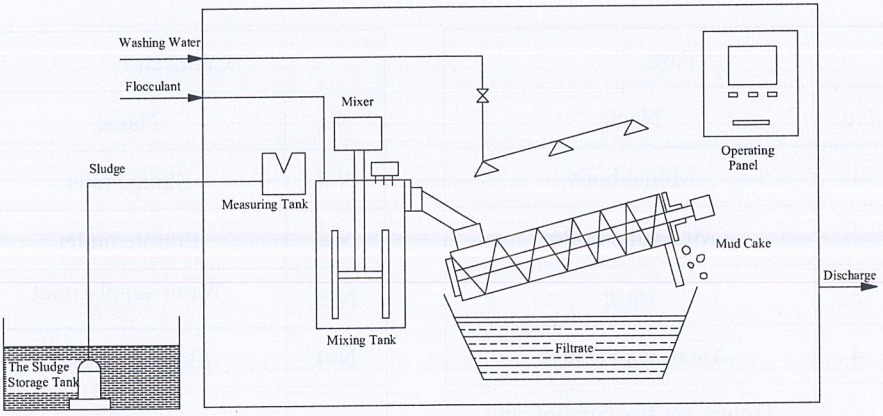

◆ The names of each part

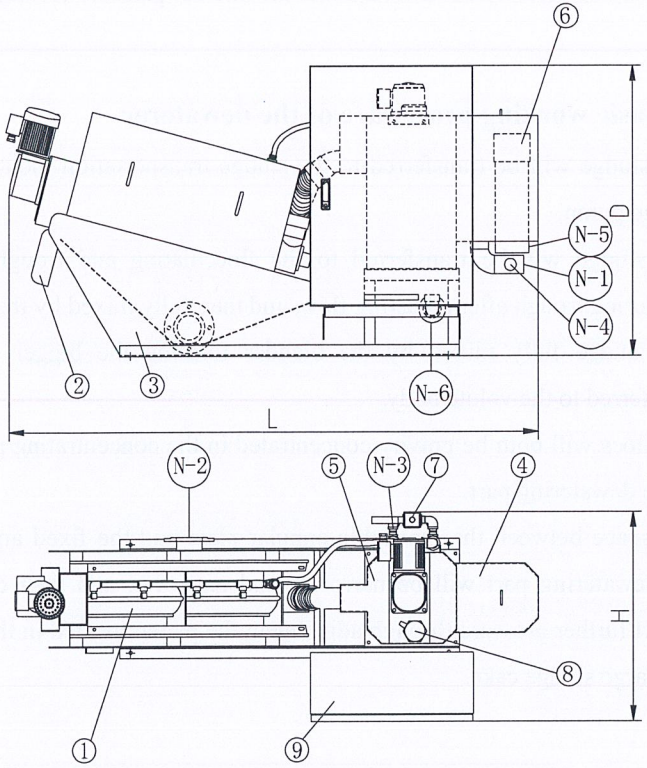

Parts	
No.	Name
1	Volute body
2	Mud cake outlet
3	Base
4	Measuring trough
5	Trough for flocculating and mixing
6	Water level adjustment tube

Connector	
No.	Name
N-1	Sludge inlet
N-2	Filtrate outlet
N-3	Water supply inlet
N-4	Flocculant inlet
N-5	Return pipe
N-6	Drainage outlet of trough for flocculating and

				mixing
7	Water supply electromagnetic valve			
8	Automatic operation electrode			
9	Comprehensive electric control cabinet			

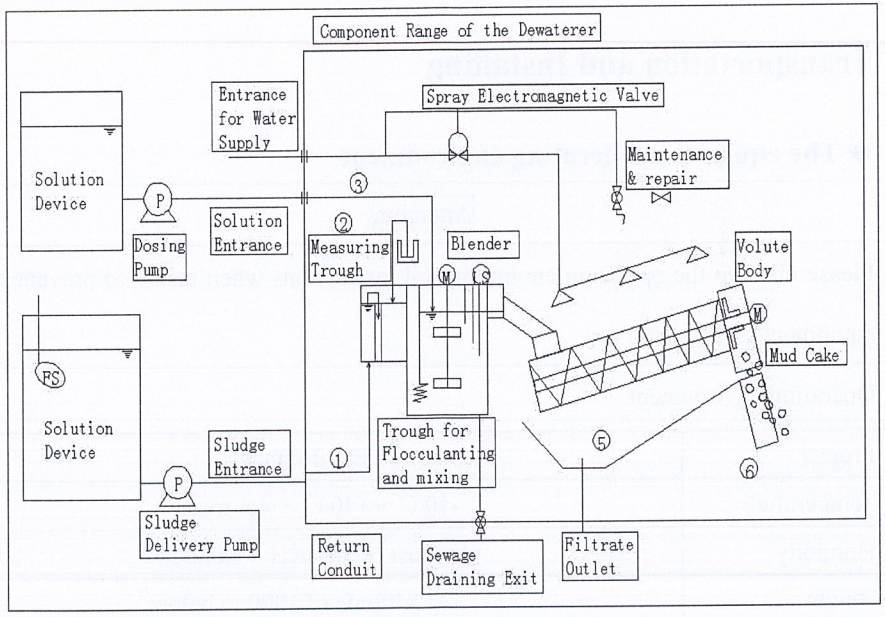

① The sludge in the sludge storage tank will be transferred to the measuring trough by the sludge delivery pump.

② The sludge transferred into the measuring trough will be transferred into the trough for flocculating and mixing through measuring, and the rest sludge will go back to the sludge storage tank through the water level adjustment tube.

③ Inject polymer flocculant into the sludge transferred to the trough for flocculating and mixing, and stir the sludge and the polymer flocculant to make

E-1368

them into flocculating group.

④ The flocculating group by stirring the sludge will be transferred to the volute body.

⑤ The flocculating sludge sent to the screw body will be transferred to the dewatering part through gravity concentration in the screw concentrating part.

⑥ The space between the moveable annular plate and the fixed annular plate will be narrower and narrower, and the dewatered mud cake through the platen adding pressure to dewater will discharge mud cake.

Transportation and Installing

◆ The equipment operating environment

Attention
Please observe the operating environmental instructions when install to prevent the equipment malfunction.

Operating environment

Project	Environment
Temperature	-10℃～+40℃（Not freeze）
Humidity	At most of 90%RH（Not dew）
Height	An altitude of 1000 m below
Storage temperatu	20℃～+65℃（Allowed temperature for short time transportation
Noise	Below 70dB(A)
Hydraulic pressur	0.2～0.3MPa

◆ Equipment transportation and installation

Warning
• Please ask for the professional company to install, transport and transfer the

dewaterer.

- Please let the qualified persons lift up or use the crane to lift up the dewaterer.
- Please use the designated bolt to fix the dewaterer to prevent reversing or colliding.
- Please use the designated bolt to firm the frame set where the dewaterer is set to prevent reversing or colliding.
- Please use the nylon cable to lift up or install the dewaterer as a reference.
- Please don't use forklift to prevent reversing or colliding.
- Please use the nylon cable which can bear the weight of the machine to lift up to prevent reversing or colliding.
- Please keep the dewaterer horizontal to prevent reversing or colliding.
- Please lift up the dewaterer slowly to keep it balance to prevent it losing focus, reversing, dropping or colliding.
- Please do not enter the downside of the dewaterer when lifting up to prevent reversing or colliding.

Attention

- Please put carefully when transporting or installation, and shaking violently is banned, in case that the machine will break down or damage.
- Please do not let the lifting rope run into the shower pipe, tubing, wire and operation panel, in case that the machine will break down or damage.
- Please do not lift up the screw body with lifting rope, in case that the machine will break down or damage.
- Please take down the cover when lifting up, in case that the machine will break down or damage.
- Please make sure to leave he enough space for repairing when installation. Without enough repairing space, it will not only affect the repairing but also may cause collide.

< Fixed bolt table >

Type	Bolt	Nut	Quantity	Note
MYDL-101	M10	M10	4	
MYDL-131				
MYDL-132				
MYDL-201	M14	M14	6	
MYDL-202	M14	M14	6	
MYDL-301	M16	M16	6	
MYDL-302				
MYDL-303				
MYDL-304				
MYDL-351	M16	M16	6	
MYDL-352				
MYDL-353				
MYDL-354				
MYDL-401	M16	M16	6	
MYDL-402				
MYDL-403				
MYDL-404				

※ Please leave enough space according to the drawings in order to meet the demands of repairing and operating when setting the dewaterer.

※ Please do something to prevent freezing in order to avoid the tank of dewaterer being frozen.

※ Please set according to the drawings if there are construction drawings.

◆ Piping

Attention
• Please do not let the exit of the filtrate piping lean, in case that the filtrate overflow or dirty the ground. • Please do something to prevent freezing, in case the machine will break down

or damage.

◆ Power wiring

Warning
• Please cut off the power when wiring to avoid shock. • Please cover the cover up after wiring to avoid shock. • Please ask for the professional person to wire and check to avoid shock. • Please don't damage the wire or put the heavy things on the wire to avoid shock or fires. • Please use the appointed voltage to avoid fires or machine damaged. • Please connect to the ground to avoid shock. • Please use the appointed wire to do ground connection to avoid shock. • Please be sure to put the insulating material on the terminals to avoid shock.

Power specifications

Phase	3
Allowed voltage regulation	±10%
Allowed frequency changing rate	±1%
Allowed voltage unbalance factor	±2%

① Connect the power to the appointed terminals according to the drawing.

② Connect to the ground. (connect type D to the above ground)

③ Confirm the components for connecting terminals.

④ Please connect the screw body and the operation board when putting the trough for flocculating and mixing along.

Terminals specifications	BNH30W	BNH40W	BNH50W

Wire specifications	5.5mm^2	8.0mm^2	14mm^2
Terminal bolt specifications	M4	M5	M5

◆ External power wiring

Warning
• Please cut off the power when wiring to avoid shock. • Please cover the cover up after wiring to avoid shock. • Please ask for the professional person to wire and check to avoid shock. • Please don't damage the wire or put the heavy things on the wire to avoid shock or fires. • Please use the appointed voltage to avoid fires or machine damaged. • Please do the ground connection to avoid shock. • Please use the appointed wire to connect to the earth to avoid shock. • Please be sure to put the insulating material on the terminals to avoid shock.

① External devices (Polymer flocculant dosing pump, Ferrous sulfate dosing pump, sludge transmission pump) connect the power to the terminals according to the drawing.

② External devices need ground connection.

③ Confirm the components for connecting terminals.

Terminals specifications	BNH15MW	BNH30W	BNH40W
Wire specifications	2.0mm^2	5.5mm^2	8.0mm^2
Terminal bolt specifications	M3	M4	M5

Warning

- Please cut off the power of the operation board of the dewaterer and the external devices to avoid shock.
- Please cover the cover up after wiring to avoid shock.
- Please ask for the professional person to wire and check to avoid shock.
- Please don't damage the wire or put heavy things on the wire to avoid shock or fires.
- Please don't use external signal beyond its power capacity to avoid fires or shock.
- Please don't use external signal beyond its voltage specification to avoid fires or shock.
- Please use the appointed wire to connect to the ground to avoid shock.
- Please be sure to put the insulating material on the terminals to avoid shock.

① Connect the external signal according to the appointed terminals referring to the drawing.

② Collect terminals according to the chart below.

Wire specifications suit for terminals	1.25mm^2
Terminal bolt specifications	M3

③ External signal output power has no voltage contacts, the contact capacity as follows:

Voltage	AC220V/DC24V
Electric current	2A/2A

④ Please confirm contact capacity of External signal input power. The input power specifications as follows:

Voltage	Power supply voltage
Electric current	6mA

Using Methods of Each Part

The drawings and photos used in this instruction are the standard specifications products of our company.

So the drawings and photos of the objects may be different from the instruction, here we inform first.

◆ Electric control cabinet

Electric control cabinet is used to control and adjust machine.

Please be sure to operate the machine correctly under the fully understanding.

Warning
• Please be sure to cut off the power with the work of electric control cabinet to avoid shock.(except for the frequency changer)

The board of electric control cabinet

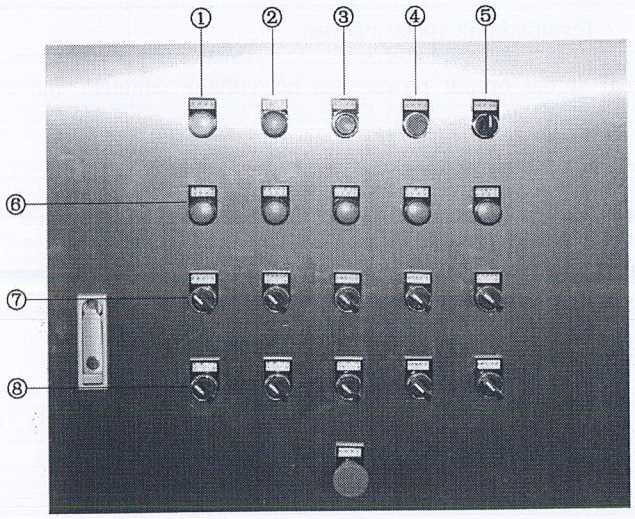

①The power indicator

The power indicator will shine when the power is switch on.

Please do not control the on and off button directly through the main switch of the electric control cabinet.

②The failure indicator

The overload indicator will shine if there is something wrong with the frequency changer or the motor is overloaded.

③Automatically start button with display light

If you need the volute sludge dewatering in automatic running state, Press the automatically start button, the display light will light up and the volute sludge dewatering will start working automatically.

④Automatic stop button

If you need the Volute Sludge Dewatering stop working, Press the automatic stop button

⑤Manual and automatic switch button

Manual control： when the switch (7) is In a valid state, every equipment can work separately.

Automatic control: when the switch (7) is in invalid state, all the equipments will work automatically.

⑥Operation indicating light

When the volute body motor、the mixer motor、dosing machine motor、sludge pump working, the corresponding operation indicating light will show green.

⑦Selective switch

These switches are the operational control switcher for the volute body motor、the mixer motor、dosing machine motor、sludge pump and other motor. When the equipment is in manual control, these switches are in invalid state.

⑧The emergency stop button with mushroom head

Emergency stop: in case of emergency, Pressing this button will shut down the entire control system. Please do not reset the button until handle the failure completely.

The inside of the electric control cabinet

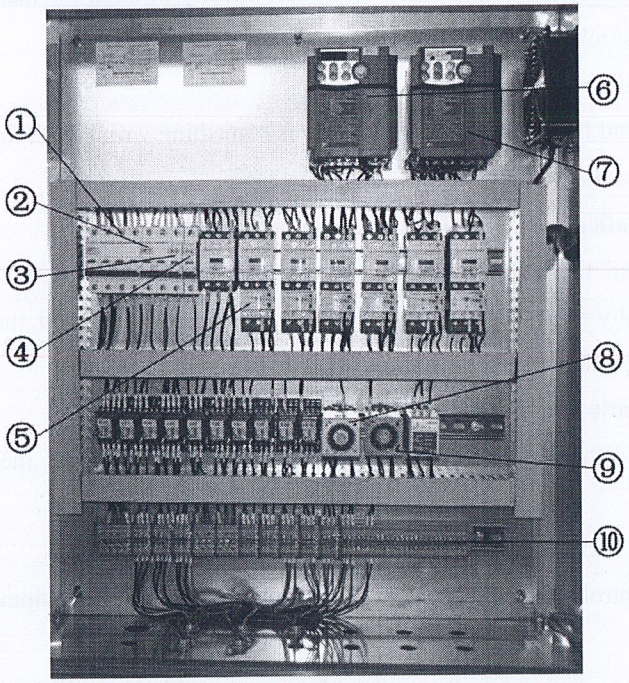

The introduction of each part

① The backbone power 【ON--OFF】(ELCB-1) The switch controls the main power of the machine.

② The power for controlling wire 【ON—OFF】(CP-1) The switch controls the power supply of the wire.

③ The switch for spray 【ON—OFF】(CP-2) The switch is used to control spray.

④ The switch for fan 【ON—OFF】:The switch is used to control cooling fan

⑤ Controlling power 【ON—OFF】(MCCB-C) The switch controls the power.

⑥ Screw shaft frequency converter（INV-1） Adjusting the motor rotation speed through frequency converter, to prevent the electrical current becoming too large.

⑦ The blender inverter of the trough for flocculating and mixing :Adjusting the blender rotation speed through frequency converter, to prevent the electrical current becoming too large.

⑧ The time delay timer for screw shaft operation :A timer setting the running delay time for screw shaft.

⑨ Spray operation timer :A timer setting the intermittent spray time for screw body.

⑩ Electrical terminal: The terminal is used to connect the power.

◆ Frequency changer

The machine adjusts the rotation speed of screw shaft and flocculation blender through the frequency converter.

Warning
• Please don't adjust the frequency converter when the machine or the electric control cabinet is under the condition of galvanic. It may cause electric shock, and be more careful when operating. • Don't control it with wet hand to avoid shock. • Please wear insulated shoes before operation.

The appearance of frequency changer

< Full figure>

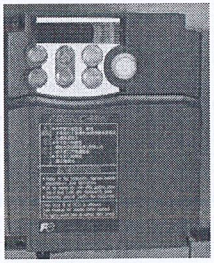

< Partial expand figure>

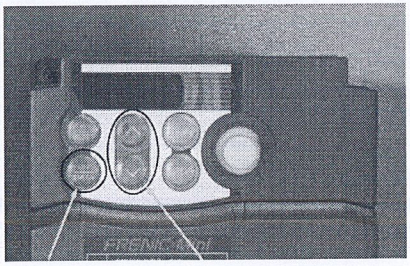

Function button/ Data switch button up/ down

The adjustment methods of motor rotation speed

① Check the current motor rotation speed

When the motor is operating, the LED display screens will display the current motor rotation speed.

The pictures on the LED screen can change by pressing the function button/data switch button.

(Output frequency· Set frequency· Output current· Output voltage· Output power and so on)

② Adjust motor rotation speed

Switching to the setting frequency page by pressing function button/data switch button.

Setting the suitable rotating speed by pressing the up and down buttons

The setting state of our company when shipment

According to the table below for the initial setting when shipment

Please refer to the instruction of the frequency converter if you want more detailed using methods.

Function showing	Names	Setting range	The minimum setting unit	The initial setting of the company shipment
F00	Data protection	0,1	-	1
F01	Frequency setting	0~4	-	0
F02	Running ·Operation	0~3	-	1
F03	The highest output frequency	25.0~400.0Hz	0.1Hz	120Hz
F07	Acceleration time	0.00~3600s	0.01s	3.0s
F08	Deceleration time	0.00~3600s	0.01s	3.0s
F11	Electronic thermal overload （Action level）	0.00~A	0.01A	Rated current motor X The number of screw shafts
F15	Cap on the frequency	0.0~400.0Hz	0.1Hz	120

E-1379

F16	Limit on the frequency	0.0~400.0Hz	0.1Hz	20
H06	Cooling fan ON-OFF controlling	0.1	-	0 (The converter more than 1.5 KW is for 1)

◆ Timer

Warning
• Please cut off the power when setting the timer. When setting the timer, it may cause the machine to start suddenly, which may make hands or tools involved in, and make people injured or machine damaged.

The machine is equipped with three timers normally.

24 hours timer (TS-1)	Setting the running time of the machine in one d
The timer of extending the screw shaft's running time (TLR-2)	Let the screw shaft continue running for a period of time after setting the machine stop, which can drain the sludge in the screw body to avoid the jam for the next day running.
Spray running time timer (TLR-3)	Setting the spray cleaning running time

The following is the using methods of the timer under the lowest limit.

Please refer to the timer instructions of detailed usage.

Screw shaft extended running time timer·Polyblend of iron and extend the injection time timer

The timer for setting screw shaft · polyblend of iron and dosing pump running time

The timer's operation as follows:

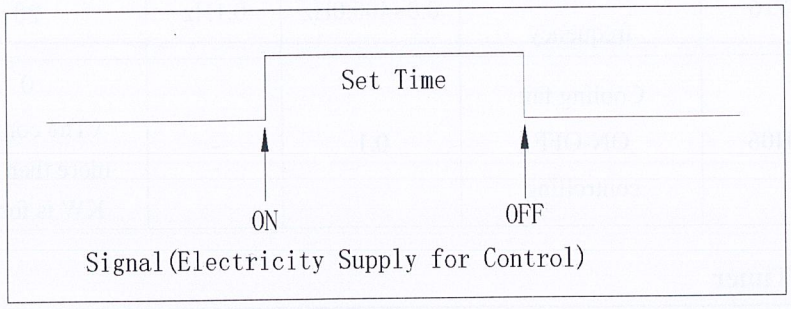

< Timer appearance >

The setting of our company when shipment

D: Spiral shaft extended operation timer

(Please don't change setting easily).

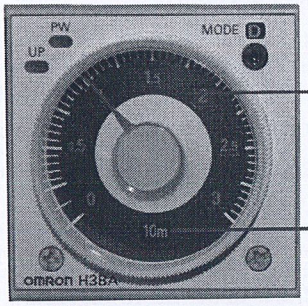

Digital Adjusting Rotary Button

Time Unit(s)

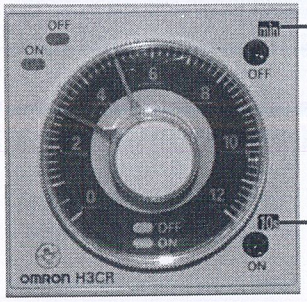

Unit of waitting time (min)

Unit of working time (10s)

Operation time/stop time setting

<Operation time setting>

E-1381

Operation time is set by switching the direction of the red pointer ON

<Stop time setting>

Stop time is set by switching the direction of the red pointer OFF

◆ Valve

Attention
• Valve must be restored to the original state after using, otherwise it may be leaking to get an electric shock

◆ Backing pressboard

Backing pressboard is used to adjust the internal pressure of the volute body.

Warning
• When adjusting the backing pressboard, please be sure to switch the operation switch (COS-1) to manual. If adjusting the machine when the state of the operation switch (COS-1) is automatic, it will cause tools or hands to be involved into the machine.

Attention
• Please do not adjust the backing pressboard if there is nothing unusual in the daily regular inspection. • Please do not set the gap of backing pressboard less than 4mm. • It will make the dewaterer overload in consequence of excessive pressure in the volute body and even the vulnerable parts (moveable annular plates· screw shaft) frayed prematurely. • Please do not screw down the stack of bolts in excess. It may cause breakage to the bolts.

Position of backing pressboard and adjusting tool

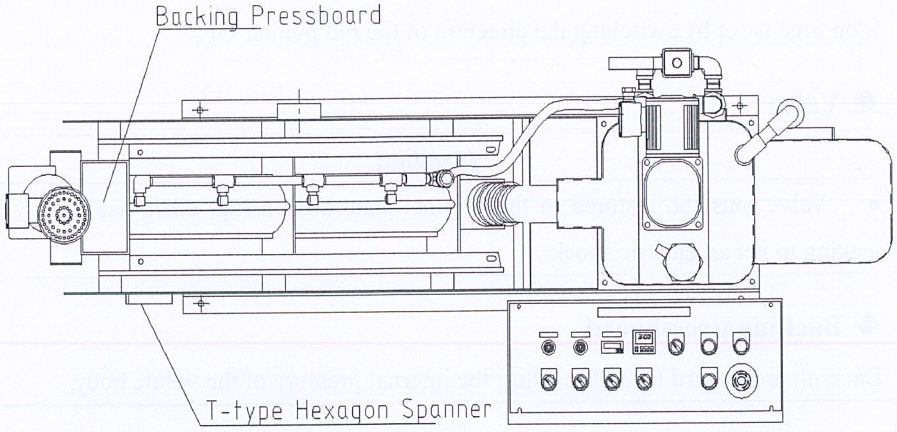

Adjusting backing pressboard

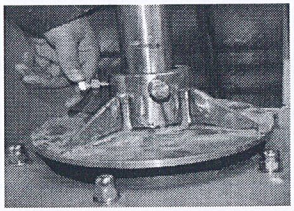

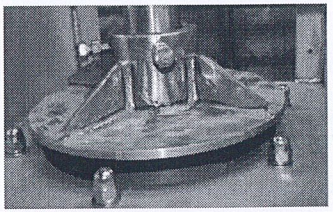

① Please be sure that the state of operation switch (COS-1) is stop and the volute body has stopped working, and then open the cover above the sewage draining exit.

② When the operation switch (COS-1) turns to manual, open the switch of volute body. When the bolt turns to upward side, unscrew the bolts.

③ Unscrewing the bolts with T-type Hexagon Spanner equipped in the machine to adjust the position of the backing pressboard.

④ Confirm the position of backing pressboard and screw bolts to fix.

◆ Liquid adjustment tube

Liquid adjustment tube is used to adjust the sludge input quantity

Attention
• Please adjust the liquid adjustment tube in the range of V-type weir. Adjusting the liquid adjustment tube too tight or too loose would cause damage to the machine and make vulnerable parts frayed soon and increase replacement frequency.

The position of Liquid adjustment tube

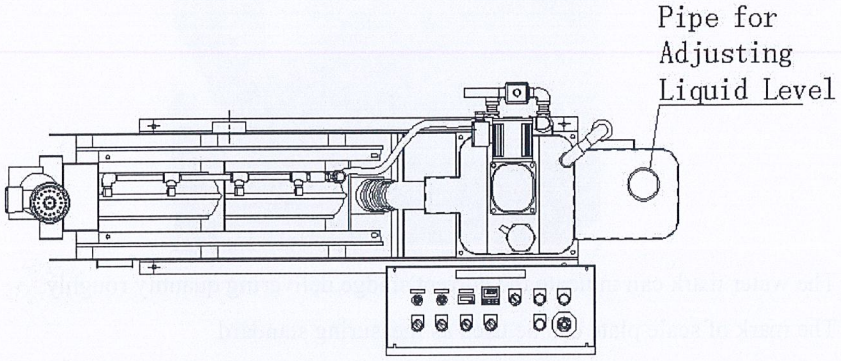

When the sludge input quantity increasing

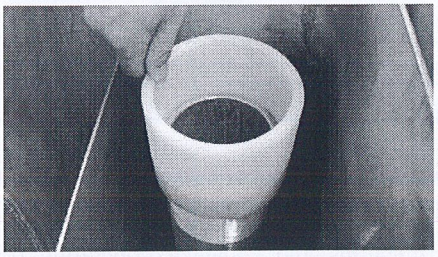

① Screw left, the adjustment tube rises, and the water level rises along with it.

② The rise of water level makes the quantity of water flow across the weir increase as well as the sludge input quantity.

When the sludge input quantity decreasing

① Screw right, the adjustment tube descends, and the water level descends along with it.

② The descending of water level makes the quantity of water flow the weir decrease as well as the sludge input quantity.

Standard sludge input quantity (weir scale plate)

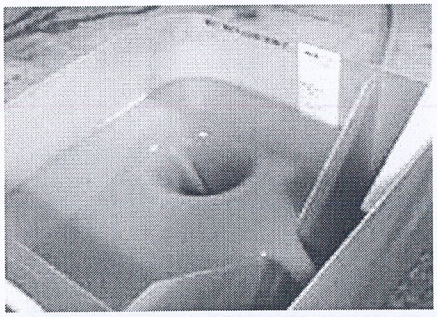

The water mark can indicate the current sludge delivering quantity roughly

The mark of scale plate can be used as measuring standard

◆ Emergency stop

Warning
• Please be sure to turn the operation switch to STOP when releasing the emergent stop button (EMS). If the operation switch(COS-1) is not on STOP, operation of machine will cause injury when releasing the emergent stop.

If the machine malfunctions and endangers operating person, please press the emergent stop button to stop machine immediately.

※When operation switch (COS-1) is on STOP state, the machine may not stop running immediately as the effect of timer (TLR-2) for extending running time of screw shafts. Please be sure to press emergent stop button (EMS) to stop the machine when facing an emergency.

Resetting methods after emergent stop

① Please release the emergent stop button

② Turn the operation switch (COS-1) to STOP

③ Rotate the emergent stop button (EMS) to the right to release the lock status.

④ Turn the operation switch (COS-1) to automatic or manual to make machine run again.

The Method of Start Operation

Warning
• Please do not operate the machine with side cover open. It may cause injury to the operating person. • Please do not put hands or objects into the mud cake draining exit. It may cause injury or damage the machine. • Please do not put hands or objects into the flocculating and mixing trough when the machine is running. It may cause injury or damage the machine.

◆ The examination before start operation

Inspection inner tubing of the machine

① Check whether the connections of inner tubing and external pipelines are loose.

② Open the valve for water supply and check whether the tubing for supplying water leaks.

③ Open the valve for maintenance and check whether the water pipes leaks.

④ Check the valve whether it is on the following state.

Name	State
Ball valve below the flocculating and mixing trough	Off
Maintaining valve	Off

Inspection for other matters

Check whether there are other matters like packing material in the measuring trough or the flocculating and mixing trough.

Inspection after wiring power supply

Warning

- Please be sure to inspect and confirm the power supply wiring by professional people in case of electric shock.
- Please screw the external terminals in case of fire.

① Please confirm to cut off the total power supply and the power supply in the electric control cabinet

② Please screw the bolts of terminals in the electric control cabinet

③ Please confirm the operation switch (COS-1) on the electric control cabinet is on STOP state.

④ Please turn on the switch for total power supply.

⑤ Please check the voltage of terminal which receives electric power on the electric control cabinet by universal meter and check whether it accords with the appointed voltage.

⑥ Please turn on the total power supply on the electric control cabinet (ELCB-1)

⑦ Please check whether the indicator light of the electrical cabinet is on.

⑧ Please turn on the operation power (MCCB-C)、the duct pilot power (CP-1)、the power for spray (CP-2) in the electrical cabinet.

Check rotation direction of the motor

Warning

- Please connect and check the electric wire by professional people in case of electric shock.

① Please be sure to check whether the wiring for electric supply phase is correct after wiring.

② Please cut off all the operation selector switches (CSL) in the electrical cabinet.

③ Please turn the operation model switch (COS-1) in the electrical cabinet to manual.

④ Please turn the operation switch of screw shafts and blender for flocculating and mixing trough to state ON and check rotation direction of every motor. The correct rotation direction of every motor is as follows:

Screw shafts: counter clockwise rotation seen from the back to the front of the mud-cake exit.

Blender for flocculating and mixing trough: clockwise rotation seen from up to down.

⑤ If motor reverse, please connect the first phase and the third phase reversely. Please be sure to cut off the total power and the electrical cabinet power firstly.

◆ Operation setting

The sludge input quantity setting for the sludge delivery pump

Please set appropriate sludge input quantity according to the capacity of the machine.

In addition, the reaction time of polymerized iron is about 3 minutes which should be taken into consideration when setting the time.

Example of setting sludge delivery pump: MYDL-132(Surplus sludge disposing capacity: 12kg-DS/h sludge density: 10000mg/L)
(conversion of sludge density: 10000mg/L=10000g/m^3=10kg/m^3=10g/L)

Sludge disposing capacity of MYDL-132 :

12kg-DS/h	÷	10kg/m^3	÷	60min/h	×	1000 Lm^3	=	20 L/min
Dried sludge quantity		Sludge density		Unit conversion		Unit conversion		Sludge-disposing capacity

Adding quantity setting of dosing pump for polymeric flocculant

Please set adding quantity of polymeric flocculant according to the disposing capacity and density of sludge

E-1389

Adding rate of pulverous flocculant is 0.6%. Adding quantity of polymeric flocculant 1000 times diluted per minute:

18kg-DS/h × 0.6% ÷ 1/1000 ÷ 1kg/L ÷ 60min/h = 1.8L/min

Quantity of dried sludge Adding rate Diluting times Density Unit conversion Adding quantity per minute

→The calculation results for the performance curve of pump and set corresponding adding quantity by regulating graduated circle. Please regulate the graduated circle when the pump is running.

Set extending running time of screw shafts (TLR-2)

During the automatically operation, the machine will stop unless it meets its requirements, and it will release the inner pressure of its main body through extending running time of screw shaft set by timer.

Please set for about 5 minutes.

Initial parameters setting when leaving factory	5 minutes

Set spray operation time (TLR-3)

「Stop time（OFF）」and 「running time（ON）」 of spray for cleaning can be set alone.

Stop time can be set by the green rotary button and running time can be set by the red rotary button.

Please set about 15 minutes for stop/ 25 seconds for running.

※Please do not set running time less than 20 seconds to prevent machine malfunction.

The spray electromagnetic valve used in machine adopts the saving mode of storage electricity restored.

When the machine runs initially or runs again after stopping working for a long time (more than 5 days), as charging voltage of capacitance decreases, it will takes about 30 seconds to start up.

	Stopping	Running
Initial parameters setting when leaving factory	15 minutes	25 seconds

Set rotary speed of screw shafts (INV-1)

Regulate the rotary speed of screw shafts by frequency changer and confirm the state of dewatered mud-cake.

The frequency changer can be regulated in the range of 20～120Hz.

※Please do not regulate frequency changer unless the machine malfunctions in daily or regular inspection after finishing debugging.

Initial parameters setting when leaving factory	50HZ

Set rotary speed of blender of the flocculating and mixing trough (INV-2)

Regulate the rotary speed of the blender by frequency changer and confirm the state of formative flocs.

The frequency changer can be regulated in the range of 20～120Hz

※Please do not regulate frequency changer unless the machine malfunctions in daily or regular inspection after finishing debugging.

Initial parameters setting when leaving factory	50HZ

Set 24 hours timer (TS-1)

① Set automatic running time

② Set present time

③ Operation mode of 24 hours timer shows as follows. Please use the timer according to the correct operation methods.

Mode	Operation condition of the timer	Operation methods
On	It has nothing to do with the set automatic operation time and always in ON state.	Turn the operation mode switch (COS-1) to automatic state then the machine runs automatically. Turn the operation mode switch (COS-1) to

		STOP state then the machine stops working.
Automatic	It controls operation and stopping of machine by set automatic operation time.	The machine runs automatically when it reaches the set automatic running time. The machine stops automatically when it reaches the set automatic stop time.
Off	It has nothing to do with the set automatic operation time and always in OFF state.	The machine cannot run automatically.

Adjust water-content rate of the dewatered mud-cake

Regulate the water-content rate of the dewatered mud-cake and deposing capacity by regulating 「backing pressboard」 and 「 frequency changer of screw shafts (INV-1) 」.

① Set the gap of backing pressboard

Decrease water-content rate.....Decrease water-content rate by making the gap of backing pressboard smaller and increase the pressure in the volute body.

Increase water-content rate.....Increase water-content rate by making the gap of backing pressboard bigger and decrease the pressure in the volute body.

※Attention: Please do not set the gap of backing pressboard less than 4mm. The smaller the gap of backing pressboard, the lower the water-content rate of mud-cake, however it will lead overload to the machine and make vulnerable parts (moveable annular plates, screw shaft) frayed soon.

② Set frequency changer of screw shaft (INV-1)

Decrease water-content rate.....As frequency of frequency changer decreases, the rotary speed of the screw shafts decreases and deposing capacity decreases accordingly. It takes longer time to dewater and concentrate the sludge in the volute body, so the water-content rate decreases.

E-1392

Increase water-content rate.....As frequency of frequency changer increases, the rotary speed of the screw shafts increases and deposing capacity increases accordingly. It takes shorter time to dewater and concentrate the sludge in the volute body, so the water-content rate increases.

※Attention: Please regulate every part of the machine according to the rotary speed change of the screw shaft

◆ Formal operation

Please confirm the installation position of the machine and switch when processing formal operation

① Check whether there is polymeric flocculant in the chemical feeder, the chemical feeder runs normally and the chemical feeder cooperate with the dewaterer well.

② Turn off all the operation selector switches (CSL) on the electric control cabinet.

③ Turn the operation mode switch (COS1) to manual mode on the electrical cabinet and turn on the corresponding operation selector switch (CSL), and then check whether it is normal to input sludge and add polymeric flocculant.

④ Turn off the operation selector switch (CSL) on the electrical cabinet.

⑤ Check whether the switch of 24 hours timer on the electrical cabinet is on automatic state and turn the operation mode switch (COS-1) to automatic state to make the machine run automatically.

⑥ Please regulate the pipe for adjusting liquid level or pipe for inputting sludge to set input sludge quantity.

⑦ Please regulate the dosing pump to set adding quantity of the polymeric flocculant.

⑧ Check whether the flocs formed are perfect after the polymeric flocculant reacting with sludge in the flocculating and mixing trough. The ideal diameter of flocs is from5mm to 10mm. If the formed flocs are not perfect, it may be

E-1393

caused by unsuitable rotary speed of blender which can be regulated by frequency changer (INV-2).

<Example of perfect formed flocs>

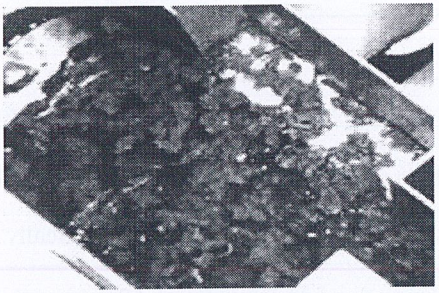

⑨ The flocs flow into the volute body and form mud-cakes which are discharged from the exit by series of disposal. The inner pressure in the volute body becomes larger along with sludge flow and it will take a period of time to form mud-cakes. (About 60 minutes)

Automatically Operation

The machine can realize automatic operation by setting 24 hours timer (TS-1)

Warning
• In the state of automatic operation, please do not touch any movable part even the machine is in the instance of standby in case that movable part can cause damage when the machine runs again automatically.

① Please set the mode of 24 hours timer（TS-1）and operation time for one day.

② Please check whether the external signal is normal in the instance that chemical feeder malfunctions or the liquid level in the sludge storage tank decrease.

③ Please turn the operation mode (COS-1) of the electrical cabinet to automatic mode.

When the mode of 24 hours timer (TS-1) is ON, the operation of machine has nothing to do with the set time by timer. The machine will run according to the set time by timer in the instance that operation mode of machine is automatic.

Manual Operation

Please carry out various inspection and maintenance by manual regulation, when inspecting the operating conditions of pumps or motors under the condition that the machine stops running for a long time for maintenance.

Attention
• Liquid level perceptron cannot be controlled automatically under the condition of manual operation. Please do not use manual operation unless inspecting the operation conditions of pumps or motors. In case that sludge flow out from the mixing trough and this will cause damage to the machine.

① Please cut off all the operation selector switches (CSL) on the electrical cabinet.

② Please turn the operation selector switches (CSL) on the electric control cabinet to manual state.

③ Please turn on each operation selector switch (CSL) and check whether each machine can work alone.

※It is forbidden to make the machine idle when checking the operation condition of pumps.

In case that vulnerable parts will be frayed and service life of the machine will be shortened.

Operation Adjustment

Warning
• Please do not touch the inner parts of the electrical cabinet with wet hand in case of electric shock. • Please wear insulated shoes when operating in case of electric shock. • Please regulate the frequency changer under the condition of power off in case of electric shock. • Please regulate the backing pressboard under the condition that the machine stops working in case that hands or tools are involved into the machine.

Attention
• Please do not set the gap of backing pressboard less than 4mm. In case that the dewaterer overloads in consequence of excessive pressure in the volute body and service life of vulnerable parts (moveable annular plate · screw shaft) will be shortened.

◆ About operation adjustment

It is unnecessary to do any other regulation except for adding flocculant after finishing regulation for the first time.

Please check the residual quantity of flocculant regularly.

As the sludge shape will change enormously in the instance that the sludge density changes in a wide range (±10 percents upward), please regulate the sludge input quantity, water-content rate and disposing capacity of dewatered mud-cake.

Regulation in the instance of sludge density changing

It will affect the disposing capacity if the sludge density is changing. Please regulate it by the methods as follows.

E-1397

Please accelerate the motor rotary speed of screw shafts and regulate the sludge input quantity by pipe of adjusting liquid level to increase disposing capacity.

Please slow down the motor rotary speed of screw shafts and regulate the sludge input quantity by pipe of adjusting liquid level to decrease disposing capacity.

※If increasing the disposing capacity blindly without regulating the gap of backing pressboard, it will make the sludge accumulated superfluously in the inner volute body. Under this condition, it will cause the motors overload as well as make vulnerable parts like moveable annular plate, screw shaft and other parts frayed soon。

Regulation in the instance of water-content rate increasing

The decrease of sludge density will lead decreasing of solid dosing quantity and increase water-content rate. The decrease of solid dosing quantity will lead decreasing of inner pressure of the volute body and decrease dewatering capacity.

Under this condition, increase sludge input quantity to increase solid dosing quantity.

※In the instance of increasing sludge input quantity, please be sure that the liquid level of the volute body is lower than the liquid level of the flocculating and mixing trough (position H) to confirm dewatering continuity through appropriate adjustment.

※In the instance of increasing sludge input quantity, if sludge density increases, it will be beyond the normal disposing capacity of the volute body, the liquid level of the volute body will be higher than the liquid level of the flocculating and mixing trough (position H) and it will lead the instance as follows, so it is necessary to inspect the sludge density regularly.

Water-content and disposing capacity of dewatered mud-cake are instable.

Sludge quantity provided to the volute body is instable.

Pump stops working in consequence of impurity on the electrodes.

Service life of pumps will be shortened as pumps are in regular intermittent operation state.

E-1398

Maintenance and Inspection

Warning
• Please be sure to cut off the electricity supply when cleaning the volute body. In case of being involved into machine and causing injury to the people.

Attention
• Please be sure to evacuate the sludge in the volute body in the instance that the machine stops working for one week or more (2-3 days for easily dried sludge). • If the machine stops working for one week or more (2-3 days for easily dried sludge) with the sludge in the volute body, the dried sludge will cause damage to the machine when the machine runs again.

Inspection and dealing with exceptional condition

There are forms for daily inspection and regular inspection in the instruction. Please use it rationally.

In addition, please refer to the operation instruction of each equipment when inspecting the motors、pumps、frequency changers or dealing with exceptional condition of these equipment.

Daily inspection items

Inspection parts	Inspection items	Inspection
Motor	Whether runs normally or not	☐
	Whether there is exceptional noise or not	☐
	Whether there is shock or not	☐
Backing	Whether the gap set is appropriate	☐

pressboard	Whether the changing range of water-content rate of dewatered mud-cake is too large	☐
The volute body	Whether solid-content of filtrate is normal	☐
Measuring trough	Whether there is sludge accumulated around the pipe for back flow and the weir	☐
Flocculating and mixing trough	Whether there is sludge accumulated around return pipe and electrode	☐
	Whether it forms appropriate flocs	☐

Regular inspection items

Inspection parts	Inspection items	Inspection
The electrical cabinet	Whether each kind of indicating lamp shines normally	☐
Motor	Whether the motor heats abnormally	☐
	Whether the machine leaks oil	☐
	Whether the electric current is approximate to the normal current	☐
Timer	Whether the machine runs according to the set time	☐
Frequency changer	Whether the machine runs according to the set frequency	☐
	Whether the frequency changer heats abnormally	☐
	Whether display screen and LED shines normally.	☐
The volute body	Whether the moveable annular plates are moving	☐
	Whether there is a great deal of filtrate leaking from the gap between the plates	☐

Electromagnetic valve	Whether the electromagnetic valves are working	□
	Whether the electromagnetic valves can switch on and off normally	□
	Whether the electromagnetic valves leak	□
Measurable trough	Whether the sludge input quantity changes	□
Bolts · Screw caps	Whether bolts and screw caps become flexible	□
Pipe · Valve	Whether pipe and valves become flexible	□
	Whether the pipe and valves crack and mangle	□

Dealing with exceptional conditions

Exceptional parts	Exceptional contents	Possible reason	countermeasures
The electrical cabinet	The lamps do not shine	Operation time of lamps exceeds their service life	Replacing lamps
Motor	Do not move	Overload	Contacting our company or agents
		Motor itself fault	Replacing motor
		Poor contact	Checking the circuit
	Abnormally heats	Overload	Reducing load
		Motor fault	Replacing motor
		The voltage is extremely high (low)	Inspecting voltage
	Exceptional noise	Motor fault	Replacing motor

		Impurity interfused into impeller	Cleaning up the impurity or replacing the motor
	Shocking	Bolts are loose	Screwing up the bolts
		Motor fault	Replacing motor
	Leaking oil	Motor fault	Replacing motor
Timer	Do not move	Poor contact	Checking the circuit
	The machine does not work according to the set time	Timer fault	Replacing timer
Frequency changer	The machine does not work according to the set frequency	Setting method fault	Please refer to instruction of frequency changer
	Abnormally heats	It is too frequent to start and stop	Please refer to instruction of frequency changer
		The voltage is extremely high (low)	Please refer to instruction of frequency changer
	Shocking	Set screws are loose	Screwing them up
		Frequency changer fault	Replacing frequency changer
	Display screen and LED do not shine	Poor contact	Checking the circuit
		Frequency changer fault	Replacing frequency changer
Backing pressboard	The gap of the backing pressboard	Set screws of the backing	Screwing up the bolts after regulating to an

	is not appropriate	pressboard are loose	appropriate gap
	The changing range of water-content rate of dewatered mud-cake is too large	Character of sludge changes	Please refer to the operation instruction
The volute body	The moveable annular plates do not move	The moveable annular plates are frayed	Contacting our company or agents
	There is large numbers of sludge leaking from the gap between the plates	The formed flocs are not appropriate	Please refer to the instruction
		Sludge input quantity is too much	Decreasing the sludge input quantity by regulating the pipe for adjusting the liquid level
		The rotary speed of screw shaft is too slow	Accelerating the rotary speed of screw shaft
	Solid-content rate of filtrate is too high	The formed flocs are not appropriate	Please refer to the instruction
		Sludge input quantity is too much	Decreasing the sludge input quantity by regulating the pipe for adjusting the liquid

			level
		The rotary speed of screw shaft is too slow	Accelerating the rotary speed of screw shaft
Electromagnetic valve	Do not move	Bad wiring	Checking the circuit
		Impurity interfused	Cleaning up the impurity
		Valve closes	Opening access
	Cannot turn on or off completely	Impurity interfused	Cleaning up the impurity
		Electromagnetic valve fault	Replacing electromagnetic valve
	Leaking water	Impurity interfused	Cleaning up the impurity
Measuring trough	There is sludge accumulated around the pipe for back flow and the weir	--	Cleaning up the accumulated sludge
Flocculating and mixing trough	There is sludge accumulated on the advection pipe or electrode	--	Cleaning up the accumulated sludge
Bolts and screw caps	Loose	--	Screw up
Tubing and valves	Loose	--	Screw up
	The pipe and valves crack and mangle	--	Replace the cracking or mangling parts

◆ **Announcements for long-term stop**

Under the condition of stopping working more than one week (2-3days for easily dried sludge)

Please be sure to operate as follows to protect the machine under the condition that the machine stops working more than one week.

① It is necessary to eliminate the sludge in the flocculating and mixing trough out by the sewage draining exit and flush the trough by water in case of decomposition and desiccation of the sludge in the trough. ※Keep the blender stirring and open the ball valve below the flocculating and mixing trough to flush the sludge in the trough. It will flush sludge out by this method successfully.

② Regulate the gap of backing pressboard to the biggest and make the screw shaft in the volute body run by manual for one hour. Flush the volute body by water if all the sludge in volute body has been flushed out.

③ Cut off the total electricity supply in the electrical cabinet

Under the condition of stopping for more than 3 months

Under the condition of stopping for more than 3 months, after accomplishing the work mentioned above in < under the condition of stopping working more than one week (2-3days for easily dried sludge)>, it is necessary to accomplish the work as follows:

① It is necessary to close the door of the electrical cabinet and keep the indoor rooms with good ventilation in case that ports in the electrical cabinet rusted.

② It is necessary to operate the machine once per three month by manual in case that electromagnetic relay rusted in the electrical cabinet.

Fault or Not

When the fault indicating lamp （OL-1）shines, please confirm the following items again before consultation or requesting for repairing.

Warning
• Please turn the operation selector switch （COS） to "STOP" state on the electrical cabinet before unchain the overload relay. In case that people are involved into the running machine to cause injury with the overload relay unchained.

Attention
• When the machine malfunctions, please stop the machine and contact our company or agents. If continuing to operate the machine under the condition that the machine malfunctions, it will cause more serious damage to the machine.

◆ The disconnecting of thermal overload relays

When the motor or pump overloads, the thermal overload relays in the electrical cabinet could disconnect and start up protection function automatically. As the thermal overload relays disconnect, the machine stops running, caution lights of thermal overload relays corresponding to the overload parts and fault indicating lamp（OL-0） on the electrical cabinet shines at the same time. So under this condition, please eliminate the cause of machine overload to unchain the disconnecting state.

If the thermal overload relays disconnect continually, please stop the machine and contact our company or agents. It will cause more serious damage to the machine, if continuing to operate the machine forcibly.

Methods for unchaining the disconnecting relays

① Turn the operation mode switch （COS-1）on the electrical cabinet to the stop state.

② Cut off the total electricity supply （ELCB-1）on the electric control cabinet.

③ Eliminate the cause of thermal overload relays disconnecting.

④ Press the white button on the thermal overload relays to unchain the disconnecting state.

※Under the condition that the temperature of thermal overload relays is too high, sometimes it may be impossible to unchain the disconnecting state of the thermal overload relays immediately. So at this time, it may cost a period of time for cooling the thermal overload relays before trying again.

⑤ Turn the operation mode switch （COS-1）to "ON" state again.

◆ The error signal of frequency changer

When the frequency changer （INV） has detected exceptional condition, the liquid crystal display screen of the frequency changer will display "Signal Error" and the machine will stop running automatically. If the display content disaccords with the normal content, please refer to operation instruction of the frequency changer or contact our company or agents.

Recovering methods to signal error

① Turn the operation mode switch （COS-1）to "STOP" state on the electrical cabinet.

② Eliminate the reason of causing signal error

③ Press the program button/reset button of frequency changer （INV）.

④ Turn the operation mode switch （COS-1）to "ON "state on the electrical cabinet and restart the machine.

◆ Confirming matters before consultation

Please confirm the problems which occur frequently as follows before consultation

or requesting for repair. If the machine still cannot run normally after confirming, please contact our company or agents.

<Problems occurring frequently>

Cannot run automatically

When setting automatic operation and turning the operation mode to automatic state, the machine still cannot run automatically, please confirm the items as follows:

- Whether manual switch of 24 hours timer（TS-1）is automatic.
- Whether there is any abnormal condition of chemical feeder and sludge storage tank.
- Whether the thermal overload relays disconnect.
- Whether the emergent stop button is pressed.

※ Under the condition of nonstandard making, it may not accomplish the approach mentioned above completely.

After implementing the methods mentioned above, if the problem still cannot be solved, please take more detailed confirmation.

① Before inspection, please be sure to turn the operation mode switch （COS-1） to "STOP" state, turn each operation selector switch（CSL） to "STOP" state and inspect whether the valve state is normal.

② When the total electricity supply （ELCB-1） turns on, the indicator light of electricity supply shines as well as the LED display screen of each frequency changers （INV）. If the indicator light of electricity supply and the LED display screen of each frequency changers don't shine, it may be caused by no electricity supply for the machine, service life of indicating lamps or fault of frequency changers. So when switching or wiring, please cut off the electricity supply and engage professional people to do it.

③ When the electricity supply for operating the electrical cabinet （MCCB-C）is connecting, the fault indicating light （OL-0） does not shine. Even pressing the emergent stop button (EMS), the fault indicating light does not shine. In addition, when getting error signal from chemical feeder, the fault indicating light does not

shine. If the fault indicating light (OL-0) shines, it may be caused by the following reasons.

- Drive motors of screw shafts overload
- Dosing pumps for polymer flocculant overload
- Sludge delivery pumps overload
- Frequency changer fault of screw shaft drive motors
- Frequency changer fault of blender motor of the flocculating and mixing trough

Under the condition of restoring the machine, please eliminate the reason causing fault and unchain the short-circuit error.

④ The 24 hours timer （TS-1） is in automatic state. Even the timer is in automatic state and the machine in automatic operation standby state, if present time is beyond the set operation time scope, the machine will not run. If needing the machine working immediately, it is necessary to reset the operation time of the timer.

⑤ Do not make the sludge level lower than the lowest liquid level in the sludge storage tank. If the sludge level is lower than the lowest liquid level, please cut off the total electricity supply （ELCB-1） and electricity supply for operation （MCCB-C）. Please check whether the sludge level of the sludge storage tank is normal before starting the machine.

⑥ Keep the timer for extending running time of screw shafts on power supply. Check whether the indicating lamp on the timer shines. If the indicating lamp does not shine, it may be caused by timer fault or wring fault. So when switching or wiring, please cut off the electricity supply and engage professional people to do it.

After accomplishing each inspection item mentioned above, turn the operation mode switch （COS-1） to automatic state to make the machine run automatically. If the machine still cannot run automatically, please contact our company or agents.

The sludge cannot enter the flocculating and mixing trough

① The sludge delivery pump does not work.

This instance is caused by pump fault; please contact the manufacturer of pump

② Whether there is air retained in the sludge delivery pump.

The liquid level controller fault in the sludge storage tank leads that the controller cannot work normally and the sludge delivery pump breathes in air. So the sludge cannot be transported normally, please inspect the sludge storage tank.

③ Whether the sludge delivery pump is blocked.

Turn off the total electricity supply （ELCB-1）and check whether the sludge delivery pump is blocked.

④ Whether the impeller of sludge delivery pump is frayed.

Although the pump is working, the sludge cannot be transported completely. It may be caused by impeller abrasion. Under this condition, please contact the supplier of pumps.

⑤ Whether the sludge in the flocculating and mixing trough is too full (above the highest liquid level of electrode)

If the sludge is too full in the flocculating and mixing trough, it will lead excessive sludge input.

Under this condition, decrease the sludge input quantity by regulating the pipe for adjusting liquid level and regulate the adding quantity of medicine.

The flocculating and mixing trough is full of water and restores over a period of time. If this operation state persists, the flocculating and mixing trough will be full of water and restores automatically again and again. It will lead the pump in the intermittent working state and to shorten the service life of pumps. So please be sure to regulate the sludge delivery quantity and flocculant adding quantity to the best value.

⑥ Impurity clinging on the electrodes in the flocculating and mixing trough leads the machine working abnormally.

The short-circuit caused by impurity clinging on the electrodes is judged incorrectly that it is caused by full water state. Please clean up the impurity.

⑦ Whether the valves of sludge delivery pipe are closed or pipes are blocked.

Check the on-off state of the valves and whether the pipes are blocked.

The dewatered mud-cake cannot be discharged

① Whether there is sludge flowing into the volute body from the flocculating and mixing trough

Check whether the pipe connecting the flocculating and mixing trough and the volute body is blocked.

② Whether the size of flocs formed in the flocculating and mixing trough is appropriate.

When the flocs cannot be formed or be formed completely, the solid matters will leak from the gap of the volute body. This instance will lead the decrease of solid matters reclamation rate and decrease of dewatered mud-cake discharged quantity, even no mud-cake discharged. Please regulate to form appropriate flocs.

③ Whether the gap of backing pressboard is appropriate

The mud-cakes cannot be discharged from the outlet when the gap of backing pressboard is 0mm (close completely)

Please set appropriate gap of backing pressboard.

④ Whether the drive motors of the screw shafts run normally

Please inspect whether the drive motors of the screw shafts run normally.

If the motor cannot run normally, it may be caused by motor fault. Please stop the machine immediately and consult our company or agents.

⑤ Whether the rotary direction of screw shaft drive motors is correct

When exchange the volute body, if the wring of screw shaft drive motors is fault, it will lead motor reversion.

The sludge cannot be discharged and it may lead damage to the machine when motor reversion. So if finding motor reversion, please cut off the electricity supply and check the wring.

Discharge jets cannot spray water

① Whether the valves are close

Check whether the valves of all water-supply pipes are open.

② Whether the outlets of discharge jets are blocked by rubbish

Take down the discharge jets and clean up the rubbish inside.

③ Whether 「Operation time ON」 of timer for spray time（TLR-3）is on "0"position.

Set the operation time which is indicated by 「Operation time ON」 set button (Red Finger) more than 20 seconds.

④ Whether the electromagnetic valve for spray runs normally

Check whether the electromagnetic valve for spray runs normally. If the electromagnetic valve cannot run normally, it may be caused by electromagnetic valve fault. Please consult our company or agents.

⑤ Whether the electricity supply for spray is turned on

There is a switch set in the electromagnetic valve to protect the electromagnetic valve for spray. If the switch is not turned on, the electromagnetic valve will not start.

Water-content rate of dewatered mud-cake is too high (the formed flocs are less)

① Whether the sludge density is too high

The proportion of solid matters and flocculant adding quantity is maladjusted when the sludge density is low, so the flocs cannot be formed appropriately. At this time, decrease the sludge input quantity according to the disposing capacity of the machine to decrease the solid matters input quantity.

② Whether the PH of sludge is appropriate

If the PH is not appropriate, it may cause that the polymer flocculant cannot make full use of its performance.

Please confirm the appropriate PH range of used polymer flocculant first, and then regulate the PH of sludge to an appropriate value. In addition, the medicine used can decrease the PH value of the sludge, it may cause that the polymer flocculant cannot make full use of its performance. In this instance, it is necessary to minimize the use of chemical compound which can decrease the PH value of sludge.

③ Whether the density of polymer flocculant changes

The equilibrium between solid matters of sludge and adding rate of flocculant will be disrupted as soon as the polymer flocculant density changes. This instance will lead that it will not form appropriate flocs.

When preparing the flocculant manually, please confirm the adding quantity of polymer flocculant and water for diluting

When preparing the flocculant automatically, please confirm whether the set value is consistent with the adding quantity.

④ Whether the discharging quantity of polymer flocculant is appropriate

Please stop the machine and discharge all the sludge in the flocculating mixing tank.

Actuate the dosing pump for polymer flocculant in the manual mode and check whether the dosing quantity is consistent with the performance curve of the pump. If the dosing quantity is quite little or even no according to the result of the inspection, please take each inspection as follows:

- Whether pipes are blocked by impurity
- Whether there is solution in the tank for preparing flocculant
- Whether the vulnerable parts of pump are frayed

⑤ Whether there is impurity clinging around the pipes for adjusting liquid level and wire in the measuring tank.

It will affect the back flow of sludge, if impurity clings around the pipes for adjusting liquid level and wire in the measuring tank. The proportion of solid matters and flocculant adding quantity is maladjusted in this instance, so the flocs cannot be formed. At this time please clean up the pipes for adjusting liquid level.

※If the problem still cannot be resolved after actualizing the ①~⑤ methods mentioned above, please choose another polymer flocculant.

Please contact our company、agents or the manufacturer of polymer flocculant.

Water-content rate of dewatered mud-cake is too high (the formed flocs are large)

① Whether the sludge density decreases

The proportion of solid matters and flocculant adding quantity is maladjusted when the sludge density becomes low, so the flocs cannot be formed. At this time, increase the sludge input quantity according to the disposing capacity of the machine to increase the solid matters input quantity.

② Whether the density of polymer flocculant changes

The equilibrium between solid matters of sludge and adding rate of flocculant will be disrupted as soon as the density of polymer flocculant changes. This instance will lead that it will not form appropriate flocs.

When preparing the flocculant manually, please confirm the adding quantity of polymer flocculant and water for diluting

When preparing the flocculant automatically, please confirm whether the set value is consistent with the adding quantity.

If the adding quantity of polymer flocculant is overfull, some instances will happen as follows.

Please check whether instances are improved after regulating the flocs to appropriate state.

- Whether there is high glutinous sludge accumulating around the advection pipe
- Whether there is high glutinous sludge accumulating in the gap between plates of volute body.
- Whether the filtration function of volute body is well.
- Whether the filtrate is viscous.
- Whether the load of motor (electric current value) becomes heavy when water-content rate of dewatered mud-cake decreases.

③ Whether there is impurity clinging around the pipes for adjusting liquid level and wire in the measuring tank.

The sludge quantity flowing into the flocculating mixing tank decreases, if there is impurity clings around the wire, and the proportion of solid matters and flocculant adding quantity is maladjusted, so the flocs will become larger. At this

time please clean up wire.

※If the problem still cannot be resolved after actualizing the ①～⑤ methods mentioned above, please choose another polymer flocculant.

Please contact our company、agents or the manufacturer of polymer flocculant.

About the Vulnerable Parts

During the operation of the machine, some parts may be frayed. It is necessary to replace the frayed parts by a certain period.

Statement: it needs to charge for the vulnerable parts replacement even in the guarantee period

Attention
• The change of sludge density may cause wide-range change of water-content rate of mud-cake and sludge disposing capacity, and it may make the machine beyond its disposing capacity. Please regulate the whole machine. If the machine is on heavy load operation all through, it may cause the sludge blocked of the volute body, drive overload of the screw shaft, vulnerable parts（moveable annular plates, screw shafts）frayed and consumed unconventionally.

Replacing standard of Vulnerable Parts

The machine cannot make full use of its ability with the abrasion of moveable annular plates and screw shafts in the operation process. Please confirm the running time of the machine according to the chat below.

Model	Parts names	Replacing period（operation time）
Type 100	Moveable annular plate（dewatering part）	10000 hours
	Screw shaft	30000hours
Type 130	Moveable annular plate（dewatering part）	10000 hours
	Screw shaft	30000hours
Type 200	Moveable annular plate（dewatering part）	10000 hours

E-1416

	Screw shaft	30000 hours
Type 300	Moveable annular plate (dewatering part)	20000 hours
	Screw shaft	50000 hours
Type 350	Moveable annular plate (dewatering part)	30000 hours
	Screw shaft	60000 hours
Type400	Moveable annular plate (dewatering part)	40000 hours
	Screw shaft	80000 hours

※The replacing time of vulnerable parts mentioned above is a ballpark figure and is not the guarantee period of the vulnerable parts' service life. The service life of vulnerable parts is determined by operation method and condition, so sometimes the vulnerable parts may not need replacing after replacing period.

※As the replacing period is the generalized data got by definite experiments, in the actual operation, the change of correlative condition (sludge variety, sludge shape, disposing capacity, state of operation and regulation, condition of the supporting equipments) will affect the replacing period.

About after-sale service

- Please apprize the machine mode and manufacture number character on the nameplate when needing repairing service.
- The service items beside the warranty scope need charge even in the guarantee period.
- After the guarantee period, we will take the paid service according to the customers' requirements if the machine can restore by repairing.
- We will recycle the replaced parts which can be reused when repairing the machine.

Product Warranty Terms

1. The warranty object

The warranty object is the machine indicated by the machine name in the Product warranty. It aims at the operation condition in China.

2. Warranty time

12 months after shipment. The time exceeding 12 months is not in warranty time.

Safekeeping condition before operation as follows:

① Emplace the machine in the building without leakage of rain or water, namely indoor.

② The place without exceptional temperature, exceeding difference in temperature, exceeding wet and dew.

（temperature range: -10℃～40℃ wet range: below 85%）

③ The place without the material which can produce caustic gas and cause salts corrosion to the machine.

④ Take corresponding measures to protect the machine when constructing around.

⑤ It is forbidden to put things on the machine or lean things on the machine.

⑥ Do not switch on the electricity supply, or make water or sludge stay in the machine before using.

⑦ It is your responsibility to keep the machine after consignment.

3. Warranty scope

① The warranty scope is only applicable for our company's manufacture scope.

② During the warranty period, please install and operate the machine normally according to the operation instruction. If the machine still cannot run normally, our company will on-the-spot service after ascertaining the reason.

③ In principle our company only takes responsibility to lade the machine to the car and delivery it to the appointed place. It is your responsibility to unload and install it.

4. Matters needing attention besides responsibility

Even in the Warranty period, the items as follows are not in the warranty scope. The repair charge should be paid by the customer.

① Malfunctions are caused by arbitrary disassembly and alteration by the customer.

② The customer use the machine beyond its specification scope (definite specification、standard specification).

③ The damage to the machine is caused by forced slinging for conveying and moving, concussion or other reasons.

④ The malfunctions are caused by fault use、improper keeping、improper maintenance、improper safe management of customers or other reasons which have nothing to do with our company.

⑤ The malfunctions are caused by using component below standard or vulnerable parts beyond allocated.

⑥ The malfunctions are caused by repairing in the factories which are not of our company or appointed factories of our company.

⑦ Natural color fading of japanning parts.

⑧ The malfunctions are caused by fire hazard, salts corrosion, caustic gas or other natural disasters.

⑨ Replacement of the following vulnerable parts

The moveable annular plates, screw shafts, bolts and nuts, mechanical bearing, electromagnetic valves, side baffle plates, stickers, indicating lamps on the operation board, fuse

⑩ It is determined by negotiation of both for the unknown reasons except the items mentioned above.

BOEEP

博一环保

ADD:No. 88, Zhaozhuang Road, Yangmiao, Hanjiang, Yangzhou, Jiangsu P.C.: 225125

Tel: 0086-514-87848766 Fax: 0086-514-87894600 Email:boe@boeep.com

E-1420

newterra ltd.
1291 California Avenue, Brockville, ON K6V 5W3
(800) 420-4056 / www.newterra.com

APPENDIX F

Safety Data Sheets

© 2019 by **newterra**, ltd.
All rights reserved. No part of this document may be reproduced or transmitted in any form or by any means, electronic, mechanical, photocopying, recording, or otherwise, without prior written permission of **newterra** ltd.

Product name: ***AQUASEP PRESERVATIVE FOR POTABLE WATER***
Revision Date: *Sep 26, 2016*
Expiry: *Sep 26, 2019*

1. SUBSTANCE AND SUPPLIER IDENTIFICATION

PRODUCT NAME: Aquasep preservative for potable water

DISTRIBUTOR: Guardian Equipment Inc.
ADDRESS: 1140 N. North Branch Street, Chicago, IL 60642 U.S.A.
PHONE: 312-447-8100
EMAIL: info@gesafety.com

MANUFACTURER: Germiphene Corporation
ADDRESS: 1379 Colborne St. E., Brantford, Ontario, N3T 5M1 Canada
PHONE: 519-759-7100
FAX: 519-759-1625

EMERGENCY PHONE: CANUTEC 613-996-6666

PRODUCT USE: A preservative for potable water

USE OF SDS: While this material is not considered hazardous under normal and reasonably foreseeable use, this SDS contains valuable information critical to the safe handling and proper use of the product for industrial workplace conditions as well as unusual and unintended exposure such as large spills. This SDS should be retained and available for employees and other users of the product. For specific intended-use guidance, please refer to the information provided on the package or instruction sheet.

2. HAZARD IDENTIFICATION

NOTE: *At use-dilution, this product is safe for its intended use and is not expected to irritate the eyes. The hazard classification below is for the concentrated (undiluted) product only.*

SIGNAL WORD: Warning
SYMBOLS: None

GHS Classification for Undiluted Product:

	Health	Environmental	Physical
Skin Irritation:	Category 3	None known	None known
Eye Irritation:	Category 2B		

HAZARD STATEMENTS:
H320: Causes eye irritation
H316: Causes mild skin irritation

PRECAUTIONARY STATEMENTS:
P264: Wash hands thoroughly after handling.
P305+P351+P338: IF IN EYES: Rinse cautiously with water for several minutes. Remove contact lenses, if present and easy to do. Continue rinsing.
P337+P313: If eye irritation persists, get medical attention.
P332 + P313: If skin irritation occurs, get medical advice/attention.

3. COMPOSITION / INFORMATION ON INGREDIENTS

INGREDIENT:	CAS No:	% wt	Hazards (GHS Category)
Proprietary	*Proprietary*	< 10%	Eye irritation (C 2A) Specific Target Organ Toxicity (C 3)
Proprietary	*Proprietary*	< 10%	Eye irritation (C 2B) Skin irritation (C 3)

4. FIRST AID MEASURES (for concentrate)

EYES: Flush with plenty of water for at least 15 minutes. Get medical attention if irritation persists.
SKIN: Remove contaminated clothing and rinse skin thoroughly with water.
INGESTION: Drink plenty of water. If uncomfortable, seek medical attention.
INHALATION: Move into fresh air and keep at rest.
NOTE TO PHYSICIAN: In case of ingestion, monitor for acidosis and central nervous system changes. Exposed persons with previous kidney dysfunction may require special treatment.

5. FIREFIGHTING MEASURES

FLAMMABILITY: No
COMBUSTIBLE: No
HAZARDOUS COMBUSTION PRODUCTS: Not available
EXTINGUISHING MEDIA: None
SPECIAL FIRE FIGHTING PROCEDURES: None
UNUSUAL FIRE AND EXPLOSION HAZARDS: None

6. ACCIDENTAL RELEASE MEASURES

Ventilate area of leak or spill. Wipe with absorbent paper, use industrial cleaning compound.

7. HANDLING AND STORAGE

HANDLING: Avoid contact with eyes, skin, and clothing.
STORAGE: Store between 0°C and 30 °C.

8. EXPOSURE CONTROLS / PERSONAL PROTECTION

EXPOSURE LIMITS: Not available

Personal Protective Equipment (PPE)

RESPIRATORY PROTECTION: Not required for normal use.
EYE PROTECTION: Yes. Goggles recommended.
SKIN PROTECTION: Yes. Protective gloves recommended.
OTHER PROTECTIVE CLOTHING OR EQUIPMENT: No

9. PHYSICAL AND CHEMICAL PROPERTIES

APPEARANCE:	Clear liquid, colourless to light yellow
ODOUR:	Odourless
PHYSICAL STATE:	Liquid
pH:	5.0 - 7.0
BOILING POINT:	Not available
FREEZING POINT:	Not available
EVAPORATION RATE:	Not available
VISCOSITY @ 22 ± 1°C:	Not available
VAPOUR PRESSURE (mmHg):	N Not available
SPECIFIC GRAVITY @ 22 ± 1°C:	1.00 – 1.10
SOLUBILITY:	Infinitely soluble in water.
ODOR THRESHOLD:	Not available
RELATIVE DENSITY:	Not available
FLASH POINT:	None
FLAMMABILITY:	None
FLAMMABILITY/EXPLOSIVE LIMITS:	None

10. STABILITY AND REACTIVITY

STABILITY:	Stable
CONDITIONS TO AVOID (STABILITY):	None
INCOMPATIBILITY (MATERIAL TO AVOID):	None
HAZARDOUS DECOMPOSITION OR BY-PRODUCTS:	None
HAZARDOUS POLYMERIZATION:	No
CONDITIONS TO AVOID (POLYMERIZATION):	None

11. TOXICOLOGICAL INFORMATION

LIKELY ROUTES OF EXPOSURE: Skin and eye contact
- **SKIN CONTACT:** Concentrated solution may cause skin irritation.
- **EYE CONTACT:** Concentrated solution may cause eye irritation.
- **INHALATION:** Unknown
- **INGESTION:** Unknown

CHRONIC (LONG TERM) EFFECTS: Unknown

TOXICITY:

Proprietary	Oral: LD50 1.8 g/kg (rat)
Proprietary (rabbit)	Oral: LD50 20 g/kg (rat), Dermal: LD50 20.8 g/kg Eye irritation rabbit (Draize) 500 mg/24h, mild

CARCINOGENICITY: Not a known carcinogen according to the National Toxicology Program 13th Carcinogen Report.

12. ECOLOGICAL INFORMATION

ECOTOXICITY:	Not available
MOBILITY:	Not available
DEGRADABILITY:	No known hazardous degradable products
BIOACCUMULATION:	Not available

13. DISPOSAL CONSIDERATIONS

WASTE DISPOSAL METHOD: Dispose in accordance with Federal, Provincial and Municipal regulations.

14. TRANSPORT INFORMATION

Not classified as a hazardous good under Transport Canada TDG Regulations.

15. REGULATORY INFORMATION

USEPA REGULATIONS

TSCA Inventory-all components are listed on the USEPA's TSCA Inventory.
SARA Title III-Hazard Class(es): Acute Health Hazard
SARA Title III-Section 313 Supplier Notification: This product contains no such chemicals subject to the reporting requirements of Section 313 of the Emergency Planning and Community Right-To-Know Act (EPCRA) of 1986 and of 40 CFR 372.

Canada Controlled Products Regulations Information

Domestic Substance List (DSL)- all components are listed on the DSL.

WHMIS Hazard Classification(s) of product: none applicable.

16. OTHER INFORMATION

Prepared by: Germiphene Technical Department
Intended use of product: A preservative for potable water

Disclaimer

No representations or warranties, either expressed or implied, of merchantability, fitness for a particular purpose, or of any nature are made with respect to the product or information contained in this Material Safety Data Sheet. All information contained herein is presented in good faith and is believed to be appropriate and accurate. However, neither the above named supplier, nor any of its subsidiaries assumes any liability whatsoever for the accuracy or completeness of the information contained herein. Final determination of suitability of any material is the sole responsibility of the user. All materials may present unknown hazards and should be used with caution. Although certain hazards are described herein, we cannot guarantee that these are the only hazards that exist. The buyer or user assimes all risks associated with the use, misuse or disposal of this product. The buyer or user is responsible to comply with all federal, state, provincial, or local regulations concerning the use, misuse, or disposal of these products.

newterra ltd.
1291 California Avenue, Brockville, ON K6V 5W3
(800) 420-4056 / www.newterra.com

APPENDIX G

GLOSSARY & TERMS

© 2019 by **newterra**, ltd.
All rights reserved. No part of this document may be reproduced or transmitted in any form or by any means, electronic, mechanical, photocopying, recording, or otherwise, without prior written permission of **newterra** ltd.

newterra ltd.
1291 California Avenue, Brockville, ON K6V 5W3
(800) 420-4056 / www.newterra.com

Glossary & Terms

The following section defines abbreviations and technical terms used within this manual and the wastewater treatment industry in general.

1. ACRONYMS & ABBREVIATIONS

ACRONYM	DEFINITION
AT	Aeration Tank
BOD	Biological Chemical Oxygen Demand
cBOD	Carbonaceous Biological Oxygen Demand
CaCO3	Calcium Carbonate
CIP	Clean In Place
COD	Chemical Oxygen Demand
DO	Dissolved Oxygen
E-Coli	Escherichia coli - Gram-negative, rod-shaped bacterium
EQ	Equalization Tank
FOG	Fat, Oil and Grease
kPa	Kilo Pascal
L	Liter
LMH	Liters / m^2 of Membrane Area per Hour (Flux)
MBR	Membrane Bioreactor
MLSS	Mixed Liquor Suspended Solids
MLVSS	Mixed Liquor Volatile Suspended Solids
MT	Membrane Tank
NaOCl	Sodium Hypochlorite
NaOH	Sodium Hydroxide
NH_3 -N	Ammonia as Nitrogen (unionized)
NH_4 -N	Ammonium as Nitrogen (ionized)
NO_3 -N	Nitrate Nitrogen

© 2019 by **newterra**, ltd.
All rights reserved. No part of this document may be reproduced or transmitted in any form or by any means, electronic, mechanical, photocopying, recording, or otherwise, without prior written permission of **newterra** ltd.

newterra ltd.
1291 California Avenue, Brockville, ON K6V 5W3
(800) 420-4056 / www.newterra.com

ACRONYM	DEFINITION
NO_2 -N	Nitrite Nitrogen
NTU	Nephelometric Turbidity Unit
O_2	Molecular Oxygen
OUR	Oxygen Uptake Rate
PC	Primary Clarifier
P&ID	Process and Instrumentation Diagram
pH	Measure of Acidity & Alkalinity
PLC	Programmable Logic Controller
ppb	parts per billion
ppm	parts per million
psi	pounds per square inch
PSL	Pressure Switch Low
RAS	Return Activated Sludge
SDI	Silt Density Index
TP	Total Phosphorus
TMP	Transmembrane Pressure
TKN	Total Kjeldahl Nitrogen
TN	Total Nitrogen
TDS	Total Dissolved Solids
TS	Total Solids
TSS	Total Suspended Solids
VFD	Variable Frequency Drive
VSS	Volatile Suspended Solids
UF	Ultrafiltration
UV	Ultraviolet
WAS	Waste Activated Sludge
WWTP	Waste Water Treatment Plant

© 2019 by **newterra**, ltd.
All rights reserved. No part of this document may be reproduced or transmitted in any form or by any means, electronic, mechanical, photocopying, recording, or otherwise, without prior written permission of **newterra** ltd.

2. TECHNICAL TERMS DEFINITION

ACID	Substance which solution has a pH below 7.0, sour taste, releases hydroxyl ions in water and reacts with bases.
ACTIVATED SLUDGE	The floc produced in wastewater due to the growth of bacteria and other organisms in the presence of dissolved oxygen.
ACTIVATED SLUDGE PROCESS	Activated sludge is a process for treating sewage and industrial wastewaters using air and a biological floc composed of bacteria and protozoa.
ACTUATED VALVE	Valve with an actuator that is controlled by an external command.
ADVANCED WASTEWATER TREATMENT	Process designed to produce an effluent of higher quality than normally achieved by secondary treatment processes.
AEROBIC	Life or processes that require, or are not destroyed by, the presence of free elemental oxygen.
AEROBIC BACTERIA	Bacteria that require the presence of oxygen to live and grow.
AEROBIC DIGESTION	The aerobic digestion process is a treatment process that utilizes aerobic microbes to stabilize the solids. The microbes digest solids from primary sedimentation processes, and those from secondary treatment processes. Due to the length of time that the solids remain under aeration, the long solids retention time allows for the microbes to feed off of the cell contents of other dying/decaying microbes under digestion. This is referred to as "endogenous respiration" or "endogenous stabilization." There will be an "inert faction" between 20 and 25% by weight, in the resulting stabilized solids. This inert faction will consist of fine inorganic solids, organic solids, and cell components that will not be degradable by

© 2019 by **newterra**, ltd.
All rights reserved. No part of this document may be reproduced or transmitted in any form or by any means, electronic, mechanical, photocopying, recording, or otherwise, without prior written permission of **newterra** ltd.

the process.

AEROBIC ZONE

An environment where there is dissolved air or free oxygen.

AIR DIAPHRAGM METERING PUMP

Air diaphragm metering pump provides chemical dosing at measured rates. The dosing is set manually and it is regulated either by the amount of compressed air driving the pump or by setting the backpressure of the pumps.

AIR FLOW SWITCH (PSL)

Located on the supplemental aeration piping, used to indicate when a specific flow rate has been reached for a blower. This flow rate identifies low aeration to the aeration or membrane tank, triggering an alarm or alert.

AIR SCOURING

Diffusers placed below the membrane modules generate air bubbles in water that scour (rub) the membrane surface and keep it clean.

ALARM

A visible or audible indication of abnormal situation. An alarm may be an operator interface screen message, a light, a buzzer or another form of communication to the operator.

ALKALINE

A solution having an excess of hydroxyl (OH) ions - with pH greater than 7.0.

ALKALINITY

The capacity of water or wastewater for neutralizing an acid. Alkalinity in wastewater results from the presence of carbonate, bicarbonate, and hydroxide. Alkalinity in water helps to resist changes in pH caused by addition of acids. Generally expressed as an amount of $CaCO_3$ equivalent.

ANAEROBIC

Life or processes that require, or are not destroyed by, the absence of free elemental oxygen.

ANAEROBIC BACTERIA

Any bacteria that can survive in partial or complete absence of oxygen by using molecular oxygen found in

© 2019 by **newterra**, ltd.
All rights reserved. No part of this document may be reproduced or transmitted in any form or by any means, electronic, mechanical, photocopying, recording, or otherwise, without prior written permission of **newterra** ltd.

nitrates and sulfates.

ANAEROBIC BIOLOGICAL REACTOR	Anaerobic (in the absence of oxygen) decomposition breaks down large molecules into small molecules increasing the rate of methane generation, which can be used for energy recovery.
ANALOG	An electrical signal that is proportional to the size of the variable being monitored or controlled.
ANOXIC	Conditions where some species other than oxygen acts as the electron donor for biochemical reactions.
AUTOMATIC FLOW VALVE	This valve is used when regular changes are required in the state of the valve (fully open or fully closed only). It is controlled by the PLC.
BACKPULSE / BACKFLUSH / BACKWASH	A mode of operation in which the flow of permeate is reversed through the membrane. During backwash, accumulated solids go away from the membrane surface due to the combined effects of the membrane air scouring and backwash of permeate.
BIOCHEMICAL (BIOLOGICAL) OXYGEN DEMAND	A measure of the amount of oxygen consumed in the biological process breaking down organic matter in water – the greater the BOD, the greater the degree of pollution.
BIOCIDE	A chemical for preventing biological growth.
BIOLOGICAL TREATMENT (or BIOTREATMENT)	Process whereby dissolved organic chemical constituents are removed through biodegradation.
BIOMASS	The mixture of biodegradable material, bacteria, and biosolids present in a biological wastewater treatment system.
BIOSOLIDS	Material from sludge treatment, which contains organic matter and plant nutrient; unlike excess waste activated sludge, biosolids have undergone a treatment to decrease or eliminate pathogenic organisms. Biosolids

© 2019 by **newterra**, ltd.
All rights reserved. No part of this document may be reproduced or transmitted in any form or by any means, electronic, mechanical, photocopying, recording, or otherwise, without prior written permission of **newterra** ltd.

can be beneficially recycled.

BLOWER	Blowers are used to introduce air in order to create an aerobic environment for BOD removal and for scouring the membranes to prevent membrane fouling.
MODULE (for newterra MicroClear® MBR)	Membrane filtration unit; it is a group of interlocked MicroClear® cassettes, fastened together to act as a single unit.
CHEMICAL OXYGEN DEMAND	A test used to estimate the amount of organic matter within a sample using a strong chemical oxidizing agent. The COD is generally higher than the BOD (for sewage BOD / COD ratio varies from 0.4 to 0.8).
COAGULANT	An agent that causes fine or suspended impurities to group together (coagulate).
COMBINED SEWER	A sewer system that carries both sanitary sewage and stormwater (SW) runoff.
CONDITIONING FOULING	First stage of membrane fouling through adsorption of material.
CONTAMINANT	A source of contamination, an impurity and any substance in water which is not H_2O.
CRITICAL FLUX	Flux below which permeability decline is considered negligible.
DENITRIFICATION	Biochemical reduction of nitrate to nitrogen gas.
EFFLUENT	Wastewater – treated or untreated – that flows out of a treatment plant, sewer, or industrial outfall.
ELECTRON DONOR	Species capable of donating an electron to a suitable

© 2019 by **newterra**, ltd.
All rights reserved. No part of this document may be reproduced or transmitted in any form or by any means, electronic, mechanical, photocopying, recording, or otherwise, without prior written permission of **newterra** ltd.

acceptor and is oxidized as a result.

EQUALIZATION TANK	Used for equalization of flow and composition of wastewater.
F/M (RATIO)	Food-to-microorganism ratio (F/M) – rate at which substrate is fed to the biomass compared to the mass of biomass solids.
FEED	Feed is the term use to define fluid entering a membrane module or wastewater treatment plant.
FILTER CAKE	Accumulated particles on a filter surface.
FILTRATE	Portion of the feed stream which has passed through a filter; also known as “permeate” in membrane system.
FLOC	Aggregated solid (biomass) particle.
FLUX (or PERMEATE VELOCITY)	Quantity of material (water) passing through an area of membrane per unit time – usually expresses LMH ($L/m^2.h$), or gfd ($gal/ft^2.d$).
FOULING	Processes leading to deterioration of flux due to surface or internal blockage of the membrane.
GLYCERIN	Glycerin is the commercial form of glycerol. It is used for membrane long term preservation to avoid membrane drying.
HOUSING	Vessel which holds a membrane module.
HYDRAULIC LOADING RATE	Rate at which water enters the reactor.

© 2019 by **newterra**, ltd.
All rights reserved. No part of this document may be reproduced or transmitted in any form or by any means, electronic, mechanical, photocopying, recording, or otherwise, without prior written permission of **newterra** ltd.

HYDRAULIC RETENTION TIME (HRT)	The time required to displace the working volume of a bioreactor. HRT (d) = Bioreactor volume (L) / Feed flow rate (L/d).
INFILTRATION	Entry of water into a sewer system from sources other than infiltration – such as defective pipes, pipe joints, connections, or manhole walls.
INFLOW	Entry of water into a sewer system through such sources as defective pipes, pipe joints, connections, or manhole walls.
INPUTS / OUTPUTS	Inputs / Outputs refer to the direction of the electronic signal in reference to the PLC. They can be either digital or analog signals.
INTENSIVE / RECOVERY CLEAN	Cleaning with aggressive chemicals to recover membrane permeability.
IRREVERSIBLE / PERMANENT FOULING	Not removed by physical cleaning but removed by chemical cleaning.
LAND APPLICATION	Treatment or disposal of wastewater or wastewater solids by spending it on land under controlled conditions.
LEVEL SWITCH	Level switches are placed in tanks to indicate water level.
MICROORGANISMS	Microscopic organisms, either plant or animal, invisible or barely visible to the naked eye. Examples: algae, bacteria, fungi, protozoa, and viruses.
MAINTENANCE CLEANING	Cleaning with less aggressive chemicals to maintain membrane permeability.
MEMBRANE	A porous synthetic material which acts as a highly efficient barrier or filter in the range of molecular dimensions – allowing passage of ions, water and other solvents, and very small molecules – but most impermeable to macromolecules. Membrane classes include – MF (microfiltration), UF (ultrafiltration), NF (nanofiltration), RO (reverse osmosis).

© 2019 by **newterra**, ltd.
All rights reserved. No part of this document may be reproduced or transmitted in any form or by any means, electronic, mechanical, photocopying, recording, or otherwise, without prior written permission of **newterra** ltd.

MEMBRANE BIOREACTOR	A biological wastewater treatment system that uses a membrane to separate water from biomass.
MEMBRANE CONFIGURATION	In membrane separation technology, configuration of a membrane product describes its construction or membrane spatial arrangement. Basic membrane configurations include hollow fiber, spiral, tubular, and flat-sheet.
MEMBRANE PACKING DENSITY	Membrane area per unit volume.
MEMBRANE TANK / BASIN	Tank/basin wherein membrane cassettes are placed.
MESOPHILIC	Thriving at intermediate temperatures: 20 to 45 ^{0}C (15 ^{0}C optimum).
MESOPORE	Pore with diameter between 2 and 50 µm.
METHANOGENS	Microorganisms producing methane as a metabolic byproduct.
MICROFILTRATION (MF)	A process using a membrane class to separate relatively large particles – 0.1 to 3 µm in diameter, with relatively low applied pressures. In crossflow microfiltration system, feed solution flows perpendicular to the filter surface.
MIXED LIQUOR SUSPENDED SOLIDS (MLSS, mg/L))	A measure of the quantity of suspended solids in the aeration tank of an activated sludge treatment system.
MIXED LIQUOR VOLATILE SUSPENDED SOLIDS (MLVSS, mg/L)	The portion of MLSS that vaporizes when heated to 550°C (1022° F).
MODULE (membrane)	Smallest practical unit containing one or more membranes and supporting structures.

© 2019 by **newterra**, ltd.
All rights reserved. No part of this document may be reproduced or transmitted in any form or by any means, electronic, mechanical, photocopying, recording, or otherwise, without prior written permission of **newterra** ltd.

newterra ltd.
1291 California Avenue, Brockville, ON K6V 5W3
(800) 420-4056 / www.newterra.com

NITRIFICATION	Biochemical oxidation of ammonia to nitrate.
NUTRIENTS	Any substance that is assimilated by organisms and promotes growth; generally applied to nitrogen and phosphorus in wastewater, but also applied to other essential and trace elements.
OPERATION AND MAINTENANCE (O&M)	Organized procedure for causing a piece of equipment or a treatment plant to perform its intended functions and for keeping the equipment or plant in such a condition that it is able to continually and reliably perform its intended function.
(ORGANIC) LOADING RATE	Rate at which (organic) matter is introduced into the reactor.
PERMEABLE	Porous to the passage or penetration by fluids.
PERMEABILITY	The ratio of the flux and transmembrane pressure at that flux (L/m^2 / h/ kPa or gfd/psi).
PERMEATE	Water or fluid which has passed through the membrane; also referred to as “filtrate”.
PERMEATE PUMP	Vacuum pump which draws permeate through the membrane, as in MBR.
PERMIT	A legal document issued by the government agency. In wastewater treatment, a discharge permit requires that the plant operator achieve specific water quality standards and discharge limits by a certain date, and also establishes monitoring and reporting requirements.
PLATE-AND-FRAME	Synonymous with “flat-sheet”.
PLUG FLOW	Flow in which no back-mixing or dispersion occurs along the length of the pipe or reactor.

© 2019 by **newterra**, ltd.
All rights reserved. No part of this document may be reproduced or transmitted in any form or by any means, electronic, mechanical, photocopying, recording, or otherwise, without prior written permission of **newterra** ltd.

POLLUTANT	A contaminant at high enough concentration to endanger the aquatic environment or public health.
PORE	An opening in a membrane or filter matrix.
POROUS	Ability of certain substances to pass fluids due to an open physical structure.
POROUS PLUGGING	Type of membrane fouling – due to pore blockage.
POROUS MEMBRANE	Membrane of low selectivity operating by physical straining alone.
PRETREATMENT	In membrane wastewater treatment systems, pretreatment is the initial processing of wastewater to prolong the life of a membrane system and to optimize membrane performance. Pretreatment includes screening, equalization, oil & grease removal, primary clarification, aeration to oxidize colloidal and dissolved organics in wastewater.
RECEIVING STREAM	A river, lake, ocean, or other water course into which wastewater or treated effluent is discharged.
RELAXATION	Ceasing permeation whilst continuing to scour the membrane with air bubbles.
RESISTANCE	Resistance to flow – proportional to flow rate-to-pressure ratio.
RETENTATE	Water or fluid which is rejected by the membrane – portion of the feed solution in UF and RO that does not pass through the membrane; also called “concentrate” or “reject”.
REVERSIBLE OR TEMPORARY FOULING	Gross solids attached to the membrane surface and which can be removed by physical cleaning relatively easily – such as backflushing or relaxation.

© 2019 by **newterra**, ltd.
All rights reserved. No part of this document may be reproduced or transmitted in any form or by any means, electronic, mechanical, photocopying, recording, or otherwise, without prior written permission of **newterra** ltd.

SANITARY SEWER	A sewerage system that carries only household and commercial wastewater / sewage.
SCALING	Buildup of precipitated salts on a surface – such as pipes, tanks, boiler tubes, membrane surface (in RO, UF) resulting in a physical or chemical change.
SECONDARY TREATMENT - CONVENTIONAL	Generally, a level of treatment that produces removal efficiencies of 85 percent for BOD and suspended solids – sometimes used interchangeably with the concept of biological wastewater treatment, where wastewater is mixed with air or oxygen and sludge to encourage the growth of bacteria that “eat” organic pollutants.
SEWER	An artificial, usually subterranean conduit, used to carry off sewage or wastewater.
SILT DENSITY INDEX (SDI)	A test used to measure the level of suspended solids in feed water (especially for RO). It is a measure of the tendency of water to foul a membrane, based on a timed flow through a membrane filter (0.45 µm), at a constant pressure, also known as “fouling index”.
SHEAR (STRESS)	Force applied to a body which tends to produce a change in its shape, but not its volume.
SIDE-STREAM	Stream outside the bioreactor.
STACK	Smallest practical unit containing one or more membranes and supporting structures.
SUBSTRATE	Surface or medium on which an organism grows or is attached.
SUPERNATANT	Liquid clarified by sedimentation.

© 2019 by **newterra**, ltd.
All rights reserved. No part of this document may be reproduced or transmitted in any form or by any means, electronic, mechanical, photocopying, recording, or otherwise, without prior written permission of **newterra** ltd.

SURFACE POROSITY	Percentage of the surface area occupied by the pores.
SUSPENDED SOLIDS	Solid pollutants that either float on the surface of, or are suspended in, wastewater.
SUSTAINABLE FLUX	Flux for which the TMP (transmembrane pressure) increases gradually at an acceptable rate, such that chemical cleaning is not necessary.
THERMOPHILIC	Thriving at relatively high temperatures (49- 57 ^{0}C (45 ^{0}C optimum).
TOTAL SOLIDS	Total dissolved and undissolved solids in water or wastewater.
TRANSMEMBRANE PRESSURE	Pressure difference from the feed side of the membrane to the permeate side.
TURBIDITY	A suspension of fine particles in water that obscure the light rays and cause cloudiness and will not readily settle due to small particle size. Measure of the clarity of an otherwise clean liquid – cloudy or hazy appearance in a naturally clear liquid. Typically, turbidity of the MBR permeate is less than 1 N.T.U.
TURBIDITY UNITS	Measurement of relative ability of a solution to allow a light beam to pass through it; usual units are N.T.U. (Nephelometric Turbidity Units).
ULTRAFILTER	A mechanical unit used in the membrane separation process.
ULTRAFILTRATE	A synonym for UF “permeate”.

© 2019 by **newterra**, ltd.
All rights reserved. No part of this document may be reproduced or transmitted in any form or by any means, electronic, mechanical, photocopying, recording, or otherwise, without prior written permission of **newterra** ltd.

ULTRAFILTRATION (UF)	Membrane separation process based on size exclusion. UF operates in the molecular weight cut-off (MWCO) range from 1,000 MWCO to 200,000 MWCO, or 0.002 µm to 0.1 µm. Emulsified oils, suspended solids, bacteria, and large molecules are rejected by UF membranes. Water and small molecules – dyes, surfactants, dissolved salts, and solvents pass through in the permeate.
VOLUMETRIC MASS TRANSFER COEFFICIENT	A combination of the overall liquid mass transfer coefficient and the specific area for mass transfer .The term measures the mass transfer of oxygen into the liquid via air bubbles.
WASTEWATER	Spent or used water from a community or industry that contains dissolved and/or suspended matter.
α or β FACTOR	Factors applied to correct biological aeration demand for dissolved and suspended solids content of biomass.

© 2019 by **newterra**, ltd.
All rights reserved. No part of this document may be reproduced or transmitted in any form or by any means, electronic, mechanical, photocopying, recording, or otherwise, without prior written permission of **newterra** ltd.

newterra ltd.
1291 California Avenue, Brockville, ON K6V 5W3
(800) 420-4056 / www.newterra.com

APPENDIX H

Control Narrative

© 2019 by **newterra**, ltd.
All rights reserved. No part of this document may be reproduced or transmitted in any form or by any means, electronic, mechanical, photocopying, recording, or otherwise, without prior written permission of **newterra** ltd.

1905884 - Agnico Eagle Volute
System Control Narrative - Test Protocol

Revision	YYYY-MM-DD	Description	By
A01	2019-07-30	For Customer Review	J.Eaton
A02	2019-07-31	Updated as per Electrical	D. Butchart
B01	2019-08-02	For Production	J.Eaton
B02	2019-08-06	For Programming	J. Sine
C01	2019-09-03	As Built	J.Eaton

System Inputs

Module	Tag	Description	Input Type	HMI Display Units	Device Range and Units	Device Span/PLC Scale	Datalog (Y)	Trending (Y)	Notes	Input Verification
900	VFD-P901	VFD Status				Y			WAS Inlet Pump	
900	VFD-SP901	VFD Status							Volute Sludge Press Shaft	
900	VFD-M901	VFD Status							Floc Tank Mixer	
900	LSHH-0901	Level Switch High High	Discrete N.C.			Y			Volute Flocuulation Tank	
900	LSL-0902	Level Switch Low	Discrete N.O.			Y			Polymer Mixing Tank	
900	LSLL-0902	Level Switch Low Low	Discrete N.O.			Y			Polymer Mixing Tank	
900	M-0902-FLT	Mixer Fault	Discrete N.O.						Polymer Mixer	
900	LSHH-0903	Level Switch High High	Discrete N.O.			Y			Filtrate Tank	
900	YC-P901	P-0901 Run Permissive	Discrete N.C.			Y			Customer tie in to allow P-0901 to RUN	
900	YC-P903	P-0903 Run Permissive	Discrete N.C.			Y			Customer tie in to allow P-0903 to RUN	
7910	PSL-7911	Pressure Switch Low	Discrete N.O.	NA	0.07-0.22 inWC				Proof of Flow Pressure Switch	
900	F-M901-STAT	Fan Running Status	Discrete N.O.						M-901 Fan	
900	F-SP901-STAT	Fan Running Status	Discrete N.O.						SP-901 Fan	
8200	UPS-BATT	UPS is on battery power	UPS-ON-BATT = ON			Y			Closes on Overload Fault	
8200	UPS-FLT	UPS Fault	UPS-FLT = ON			Y			Closes on Overload Fault	

System Inputs

Module	Tag	Description	Input Type	HMI Display Units	Device Range and Units	Device Span/PLC Scale	Datalog (Y)	Trending (Y)	Notes	Input Verification
7910	TSLL-7911	Temperature Switch Low	Discrete N.O.						BLD-7910	
8200	ES-8201	Emergency Stop - MCP	Discrete N.C.						HMI Panel	
8200	UPSA-ON-BATT	UPS on Battery Power	Discrete N.O.							
8200	UPSA-FLT	UPS Fault	Discrete N.O.							

System Setpoints

Module	Tag	Description	Factory Setpoint	Setpoint Range and Units	Setpoint Change Control	Alarm setpoint (Y/N)	Notes	Setoint Verification
GLOBAL	WASTE ON/OFF	Turn Wasting ON or OFF	OFF	ON/OFF	Open			
GLOBAL	WASTE NOW	Start Wasting Immediately. (This is dependant on the conditions being OK to waste)			Open			
GLOBAL	WASTE-HOUR	Time of Day to Start Sludge Wasting	12hr	0-23 hr	Open			
GLOBAL	WASTE-TIME	Duration of Sludge Wasting	30m	0-1000m	Open			
Global	SP901-OFF-TIME	Sludge Press OFF Time Delay	5 Min	0-60 Min	Open		Time duration the sludge press operates after feed pump P-901 has turned OFF.	
Global	M901-OFF-TIME	Mixer OFF Time Delay	5 Min	0-60 Min	Open		Time duration the mixer operates after feed pump P-901 has turned OFF.	
Global	P901-SPEED	P901 VFD Speed Setting	50%	0-100%	Open			
Global	M901-SPEED	M901 VFD Speed Setting	50%	0-100%	Open			
Global	SP901-SPEED	SP901 VFD Speed Setting	50%	0-100%	Open			
Global	M902-MIX-TIME	Mix time for M-902	30 Min	0-60 Min	Open			

System Outputs and Modes of Operation

Module	Tag / Mode	Description	Control Logic	Output Type	Hour Meter	Amp Meter	HOA Control	Output Verification	Logic Verification
N/A	N/A	Start/Stop	The system will start when the start button is pressed on the HMI.			Y			
N/A	N/A	Start/Stop	The system will automatically restart after recovery from a power failure after a 30 second delay, unless the Start button is pressed first .						
N/A	N/A	Start/Stop	To stop the system press the stop button on the HMI display.						
N/A	N/A	Start/Stop	The system will shut down under some alarm conditions, see the modules below for these specific circumstances.			Y			
N/A	N/A	Start/Stop	All equipment will have to be put in “AUTO” in order to operate with the exception of heaters, auto-drain valves, and building fans.			Y			
N/A	N/A	Start/Stop	**Note:** when components are put in “HAND” mode the “AUTO” logic described below will be bypassed and the component will run regardless of inputs unless the emergency stop button is activated. This is done for on-site testing and troubleshooting purposes. When a soft HOA switch (a software based toggle switch present in remote telemetry or HMI based systems) is used, a 2 minute safety timer is used on all components to prevent running them dry or excessive flooding due to operator error.			Y			
900	SLUDGE ENABLE		SLUDGE SYSTEM ENABLED This must be Enabled for P-0901 to waste sludge. It will be disabled with any of the following alarm conditions: LAHH-0901 VFDA-P901 VFDA-SP901 VFDA-M901 LAHH-0903						

System Outputs and Modes of Operation

Module	Tag / Mode	Description	Control Logic	Output Type	Hour Meter	Amp Meter	HOA Control	Output Verification	Logic Verification
900	P-901	Waste Activated Sludge Pump	As long as the SLUDGE SYSTEM ENABLED: P-901 will be ON at time of day setting WASTE-HOUR or Operator presses WASTE NOW YC-901 must be active (YC-P901 = Active) P-901 will run for the WASTE TIME (which is settable) P901 will run on VFD with P901-SPEED setpoint If the SLUDGE SYSTEM is DISABLED then the timer will pause, it will resume when the SLUDGE SYSTEM is ENABLED.	Communication	Y	Y	HOA		
900	M-901	Flocuulation Tank Mixer	The flocuulation tank mixer M-901 will be ON when the transfer pump P-901 is ON. M-901 will be OFF after a timed duration setpoint M901-OFF-TIME after P-901 has turned OFF M901 will run on VFD with M901-SPEED setpoint The mixer will be OFF if any of the following alarms are present: VFDA-M901: Press will be OFF Shutdown Alarms: Press will be OFF	Communication	Y	Y	HOA		
900	SP-901	Volute Sludge Press Shaft Motor	SP-901 will be ON when the Transfer Pump P-901 is ON. SP-901 will be OFF after a a timed duration setpoint SP901-OFF-TIME after P-901 has turned OFF SP901 will run on VFD with SP901-SPEED setpoint The sludge press will be OFF if any of the following alarms are present: VFDA-SP901: Press will be OFF Shutdown Alarms: Press will be OFF	Communication	Y	Y	HOA		
900	SV-0901	Rinse Water Solenoid Valve	Volute spray system operates SV-0901 on a timer that operates at a factory default setting of 10 seconds every hour when SLUDGE SYSTEM ENABLED	Discrete			HOA		
900	M-0902	Polymer Tank Mixer	Polymer Mixer M-0902 is operated by pressing the START-902 button on the HMI. The mixer will run for a timed duration setpoint MIX-TIME-SP.	Discrete					
900	P-0902	Polymer Metering Pump	The polymer metering pump will be ON when LSLL-0902 is Acitve & the transfer pump P-901 is ON. The metering pump will be OFF when P-901 turns OFF The metering pump will be OFF if any of the following alarms are present: LALL-0902 : Pump will be OFF Shutdown Alarms: Pump will be OFF	Discrete			HOA		

System Outputs and Modes of Operation

Module	Tag / Mode	Description	Control Logic	Output Type	Hour Meter	Amp Meter	HOA Control	Output Verification	Logic Verification
900	P-0903	Filtrate Discharge Pump	This pump has an integral level switch for level control. Our PLC turns ON/OFF a relay that is in the control circuit for the outlet ON when YC-P903 is ON OFF when YC-P903 is oFF	Discrete			HOA		
7910	H-7911	Building Heater	The building heater (H-7911) will turn on when the building temperature falls below the manual setpoint of it's integral thermostat TSL-7911. The building heater (H-7911) will turn off when the building temperature exceeds the manual setpoint of TSL-7911.	Direct					
7910	H-7912	Building Heater	The building heater (H-7912) will turn on when the building temperature falls below the manual setpoint of it's integral thermostat TSL-7912. The building heater (H-7912) will turn off when the building temperature exceeds the manual setpoint of TSL-7912.	Direct					
8200	YI-8201	System Running Light	ON when system is in RUN mode	Discrete					
8200	YA-8201	System Alarm Light	ON when system is in Alarm	Discrete					
8200	YA-8202	Auxilary Alarm Output	When a system shutdown alarm occurs the alarm relay (YA-8202) will activate. This is a courtesy relay providing two sets of contacts, a set of normally open dry contacts and a set of normally closed dry contacts for tying into external equipment if required.	Discrete					

System Alarms

Module	Alarm	Alarm Description	Actuation Control	Delay	Email Notification (Y)	Self Resetting (Y)	System Shutdown (Y)	Notes	Alarm Verification
900	LAHH-0901	Level Alarm High High	LSHH-0901 = Active	5s		Y		Volute Flocuulation Tank	
900	LAL-0902	Level Alarm Low	LSL-0902 = InActive	5s		Y		Polymer Mixing Tank	
900	LALL-0902	Level Alarm Low Low	LSLL-0902 = InActive	5s		Y		Polymer Mixing Tank	
900	VFDA-SP901	VFD Fault		Immediate		Y		Volute Sludge Press Shaft	
900	VFDA-M901	VFD Fault		Immediate		Y		Floc Tank Mixer	
900	VFDA-P901	VFD Fault		Immediate		Y		Wasting Pump	
900	M901-OL	M901 Overload	M901-OL = ON	Immediate					
900	SP901-OL	SP901 Overload	SP901-OL = ON	Immediate					
900	M902-FLT	Polymer Mixer Fault	M902-FLT = ON	Immediate				Polymer Mixer	
900	LAHH-0903	Level Alarm High High	LSHH-903 = InActive	5s		Y		Filtrate Tank	
7910	PAL-7911	Pressure Alarm Low	PSL-7911 = InActive	5s		Y		Alarm indicates possible continuous ventilation failure, indicating risk that the room may become Class 1 Division 2 rated.	
7910	TALL-7911	Temperature Alarm Low Low	TSLL-7911 = InActive	5s		Y		BLD-7911	
8200	ESA-8201	Emergency Stop Alarm	ESA-8201 will be in alarm when any E-Stop within the system is Activated	Immediate				Any E-Stop Alarm has been activated.	
8200	PLCA-8201	General PLC Alarm	PLCA-8201 = Active	Immediate				A general PLC alarm (PLCA-8201) will be triggered by the PLC if it detects a critical internal fault. The alarm will shut down the system and will require newterra technical help to recover.	
8200	PWR-FAIL	PLC First Scan Power Fault	POWER RECOVERY TO PLC	Immediate				A first scan alarm indicates that power has been lost and then recovered to the PLC	
8200	UPS-BATT	UPS is on battery power	UPS-ON-BATT = ON	Immediate		Y			

System Alarms

Module	Alarm	Alarm Description	Actuation Control	Delay	Email Notification (Y)	Self Resetting (Y)	System Shutdown (Y)	Notes	Alarm Verification
8200	UPS-FLT	UPS Fault	UPS-FLT = ON	Immediate		Y			

Appendix F : Record Sheet

		Equilization Tank										Sump Tank					
DAY	Time Entry	EQ tanks Input FIT-11274 (m^3)	Daily EQ Tanks Input (m^3)	EQ tanks Level *LIT-19060A/B (meters)*		EQ pumps Flow FIT-19274 *PV* (m^3/h)	EQ pumps Flow FIT-19274 *SP* (m^3/h)	Blower Flow FIT-75000 (m^3/h)	Recicul ation Time (hours)	EQ pumps Totalizer FIT-19274 (m^3)	Daily Affluent Pumped (m^3)	Sump Tank Level LT-12060 *(meters)*	Sump Pump Flow *FIT-12274* (m^3/h)	Affluent PH *AIT-11094*	Sump Pump Pressure PG-12254 (psi)	Sump Pumps Totalizer FIT-12274 (m^3)	Daily Sump Pumps output (m^3)
1																	
2																	
3																	
4																	
5																	
6																	
7																	

Aerobic tank								
Aerobic Tank Level *LT-12060 (meters)*	Dissolved Oxygen *AIT-72094 (mg/l)*	*Mixed Liquor PH AIT-72093*	Temp *AIT-72092 (Celcius)*	Blower In Function B-75240A/B	Blower Flow FIT-75274 *(m^3/h)*	MLSS (g/L)	TSS Oven Dry (mg/L)	SV30 (mL)

MBR #1													
Membrane Tank #1 Level LIC-74060 *(meters)*	UV #1 Intensity AIT-91000-1 *(mW/cm²)*	UV #1 Running Time (hrs)	Permeate Flow FIT-79074-1 (m^3/h)	TMP @ 20°C (Kpa)	FLUX @ 20°C (Lm/h)	Permeability @ 20°C (Lmh/BAR)	Permeate Totalizer FIT-79074-1 (m^3/h)	Daily Permeate Produced (m^3)	Permeate Pressure PG-79054-1 (Psi)	Blower Flow FIT-75474-A (m^3/h)	RAS Pump Flow FIT-74674-1 (m^3/h)	RAS Pump Pressure PG-74654-1	RAS Pump Totalizer FIT-74674-1 (m^3)

MBR #2													
Membrane Tank #2 Level LIC-74060-2 (meters)	UV #2 Intensity AIT-91000-2 (mW/cm^2)	UV #2 Running Time (hrs)	Permeate Flow FIT-79074-2 (m^3/h)	TMP @ 20°C (Kpa)	Flux @ 20°C (Lm/h)	Permeability @20°C (Lmh/BAR)	Permeate Totalizer FIT-79074-2 (m^3/h)	Daily Permeate Produced (m^3)	Permeate Pressure PG-79054-2 (Psi)	Blower Flow 75474-B (m^3/h)	RAS Pump Flow FIT-74674-2 (m^3/h)	RAS Pump Pressure PG-74654-2 (psi)	RAS Pump Totalizer (m^3)

Sludge Tank					Permeate Tank / Effluent							
Solide waste removal (kg)	Wasted Actived Sludge (m^3)	Level LT-96060 (meters)	Extract Volume (m^3)	Blower Flow FIT-75874 (m^3/h)	Permeate Tank level LT-79060 (meters)	Pump in Function P-79600A/B	Effluent Rejection Flow FIT-79274 (m^3/h)	Effluent PH	Effluent Turbidity AIT-79089 (NTU)	Effluent Totalizer FIT-79274 (m^3)	Daily Effluent Discharge (m^3)	MBR #2 B-75400-B PG-75454-B (psi)

#REF!

Blowers Pressure					Sodium Hypochlorite		NaOH				Aintern analysis on HACH DR2700	
Equalization Tank B-75000 PG-75054 (psi)	Aerobic Tank B-75240-B PG-75254-B (psi)	Aerobic Tank B-75240-A PG-75254-A (psi)	MBR #1 B-75400-A PG-75454-A (psi)	Sludge Tank B-75800 PG-75854 (psi)	Tank Volume (liters)	Injection Rate % frequency	Tank Volume (liters)	Injection Rate % frequency	Citric Acid (%)	camp population	Ammonia ppm	Nitrates ppm