Parts List					
ITEM	ITEM QTY	CUT (MM)	PART NUMBER	DESCRIPTION	MATERIAL
1	1		Plate, 1/4" Thick x 152 Dia	Steel, Mild	G40.21M 300W
2	1	152	PIPE SCH40 ANSI - 4 x .237 - 6	Pipe	A53
3	1		Painters Post Reinforcing Plate	Plate, Mild Steel, 3/8" thk x 133 I.D. x 229 O.D.	G40.21M 300W

Ø100 NS PAINTERS SCAFFOLD CABLE SUPPORT
MARK: M1615
QTY: 6

WEIGHT/SPOOL: 3.4KG

M1615 QTY	
Tank No.	QTY
1	1
2	1
3	1
4	1
5	1
6	1
TOTAL	6

NOTES:
1. ALL DIMENSIONS ARE IN MM UNLESS OTHERWISE NOTED
2. FINISH: SANDBLAST TO SSP-6

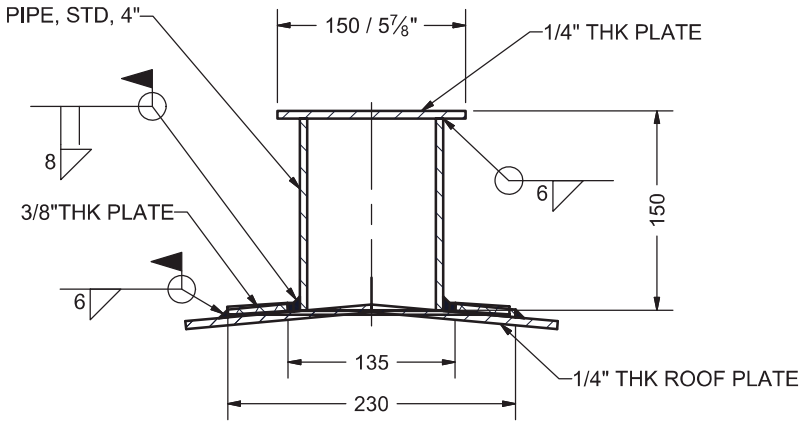

AS-BUILT
BY Inukshuk Construction Ltd. DATE 2018/07/19

PROFESSIONAL ENGINEER
S. BROWN
LICENSEE
NT/NU
16-Jul-2017
Permit Number: P471

MOSHER ENGINEERING LIMITED
-GRAVEL CRUSHING
-EARTHWORK
-PROCESS PIPE WELDING
-INDUSTRIAL CONTRACTING

1358 QUEEN ST
HALIFAX, NS
B3J 2H5
PH: (902) 429-0272
FAX: (902) 429-7762

DRAWN Jacob Saunders	4/13/2017	AEM Meliadine Fuel Storage Tanks
CHECKED		TITLE
QA		M1615 - PAINTERS SCAFFOLD CABLE SUPPORT
MFG		
APPROVED		
		SIZE A3 / DWG NO 295-M16 / REV 3
		SCALE / SHEET 15 OF 22

Parts List				
ITEM	ITEM QTY	CUT (MM)	PART NUMBER	MATERIAL
1	1		ASME B16.5 Flange Slip-On Welding - Class 150 16	A350 LF2
2	1	330	Pipe 16 - Schedule 30, 3/8" wall - 13"LG	A106

Ø400 NS ROOF NOZZLE
MARK: M1616
QTY: 6

WEIGHT/SPOOL: 83.5KG

NOTES:
1. ALL DIMENSIONS ARE IN MM UNLESS OTHERWISE NOTED
2. FINISH: SANDBLAST TO SSP-6

M1616 QTY	
Tank No.	QTY
1	1
2	1
3	1
4	1
5	1
6	1
TOTAL	6

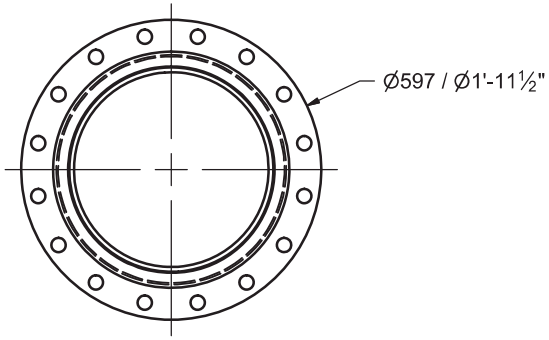

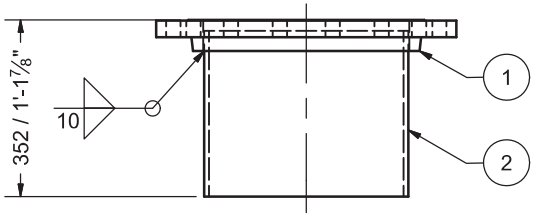

AS-BUILT
BY Inukshuk Construction Ltd. DATE 2018/07/19

REGISTERED PROFESSIONAL ENGINEER
J.C. BROWN
LICENSEE
NT/NU
16-Jul-2017
Permit Number: P471

DRAWN Jacob Saunders	4/13/2017	AEM Meliadine Fuel Storage Tanks
CHECKED		
QA		TITLE M1616 - Ø400 NS ROOF NOZZLE
MFG		
APPROVED		
		SIZE A3 / DWG NO 295-M16 / REV 3
		SCALE / SHEET 16 OF 22

Parts List				
ITEM	ITEM QTY	CUT (MM)	PART NUMBER	MATERIAL
1	1		ASME B16.5 Flange Slip-On Welding - Class 150 16	A350 LF2
2	1	330	Pipe 16 - Schedule 30 - std .375" WALL	A106
4	1		Bird Screen 1/2" in Hole Opening	MILD STEEL
6	2	1	ASME B16.9 Long Radius 90 Deg Elbow (Metric) 16 x 9.5 [.375"] WALL S30 STD	A234

Ø400 NS VENT (RETURN BEND)
MARK: M1617
QTY: 2 △3

WEIGHT/SPOOL: 320.5KG

M1617 QTY	
Tank No.	QTY
1	1
2	1
3	0
4	0
5	0
6	0
TOTAL	2

△3

NOTES:
1. ALL DIMENSIONS ARE IN MM UNLESS OTHERWISE NOTED
2. FINISH: SANDBLAST TO SSP-6

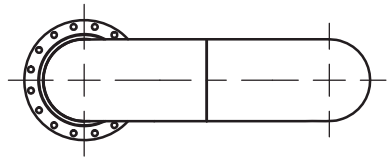

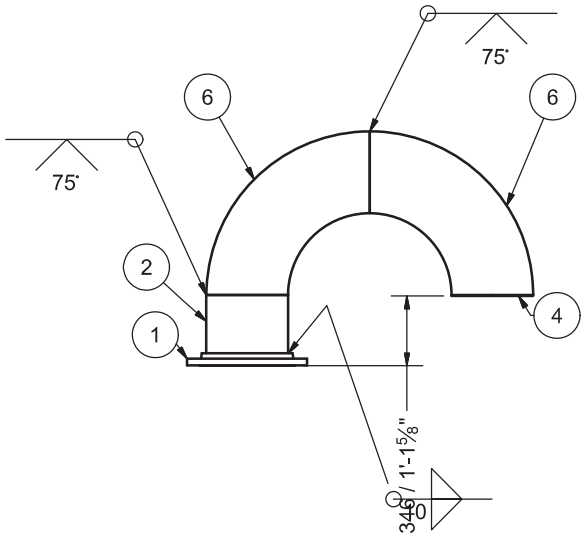

REVISION HISTORY		
REV	DESCRIPTION	DATE
3	QTY CHANGE FROM 6 TO 2	7/9/2017

DRAWN Jacob Saunders	4/13/2017	AEM Meliadine Fuel Storage Tanks
CHECKED		
QA		TITLE M1617 - 400NS VENT (RETURN BEND)
MFG		
APPROVED		
		SIZE A3 / DWG NO 295-M16 / REV 3
		SCALE / SHEET 17 OF 22

AS-BUILT
BY Inukshuk Construction Ltd. DATE 2018/07/19

REGISTERED PROFESSIONAL ENGINEER G. BROWN LICENSEE NT/NU
16-Jul-2017
Permit Number: P471

Parts List				
ITEM	ITEM QTY	CUT (MM)	PART NUMBER	MATERIAL
1	1		ASME B16.5 Flange Slip-On Welding - Class 150 8	A350 LF2
2	1	325	Pipe 8 - Schedule 40 - 12.795276	A333 GR. 6

Ø200 NS ROOF NOZZLE FOR OVERFILL PROT.
MARK: M1618
QTY: 6

WEIGHT/SPOOL: 25.8KG

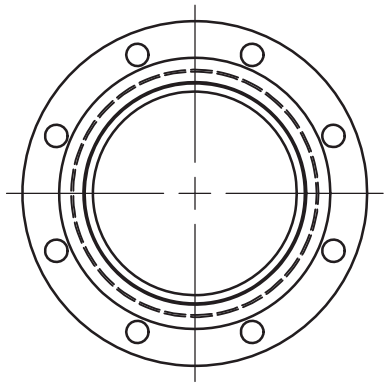

NOTES:
1. ALL DIMENSIONS ARE IN MM UNLESS OTHERWISE NOTED
2. FINISH: SANDBLAST TO SSP-6

M1618 QTY	
Tank No.	QTY
1	1
2	1
3	1
4	1
5	1
6	1
TOTAL	6

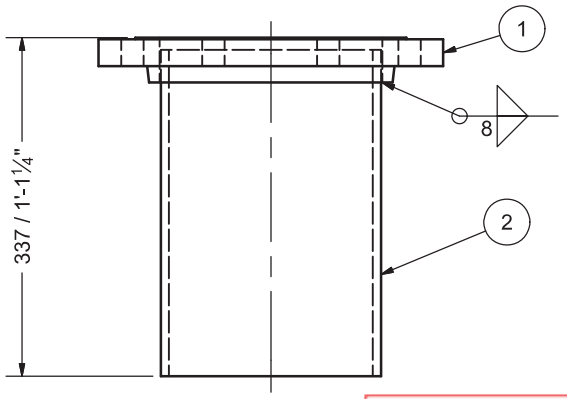

AS-BUILT
BY Inukshuk Construction Ltd. DATE 2018/07/19

PROFESSIONAL ENGINEER
J.G. BROWN
LICENSEE
NT/NU
16-Jul-2017
Permit Number: P471

DRAWN Jacob Saunders	4/13/2017	AEM Meliadine Fuel Storage Tanks
CHECKED		TITLE M1618 - 200NS ROOF NOZZLE FOR OVERFILL PROT.
QA		
MFG		
APPROVED		SIZE A3 / DWG NO 295-M16 / REV 3
		SCALE / SHEET 18 OF 22

Parts List				
ITEM	ITEM QTY	CUT (MM)	PART NUMBER	MATERIAL
1	1		Flange 6in Flat Face, Slip On 150#, A105	A350 LF2
2	1	216	PIPE ANSI - 6 x .280" WALL SCH40	A333 GR. 6

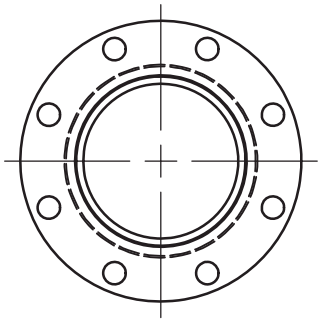

Ø150 NS ROOF NOZZLE FOR GAUGE HATCH
MARK: M1619
QTY: 6

WEIGHT/SPOOL: 13.3KG

NOTES:
1. ALL DIMENSIONS ARE IN MM UNLESS OTHERWISE NOTED
2. FINISH: SANDBLAST TO SSP-6

M1619 QTY	
Tank No.	QTY
1	1
2	1
3	1
4	1
5	1
6	1
TOTAL	6

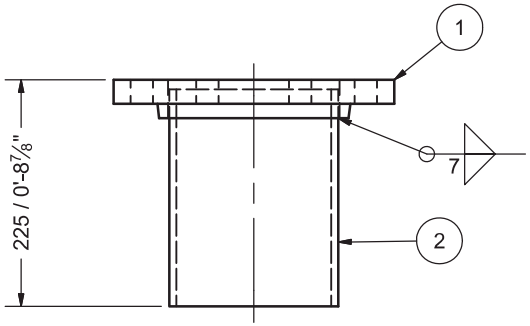

AS-BUILT
BY Inukshuk Construction Ltd. DATE 2018/07/19

REGISTERED PROFESSIONAL ENGINEER
S. G. BROWN
LICENSEE
NT/NU
16-Jul-2017
Permit Number: P471

DRAWN Jacob Saunders	4/13/2017	AEM Meliadine Fuel Storage Tanks
CHECKED		
QA		TITLE M1619 - 150 NS ROOF NOZZLE FOR GAUGE HATCH
MFG		
APPROVED		
		SIZE A3 / DWG NO 295-M16 / REV 3
		SCALE / SHEET 19 OF 22

Parts List

ITEM	ITEM QTY	CUT (MM)	PART NUMBER	DESCRIPTION	STOCK NUMBER	MATERIAL
1	1		ASME B16.5 Flange Slip-On Welding - Class 150 4	FLANGE, R.F., SLIP ON, 150#, 100NS [4"]		A350 LF2
2	1	184	ASTM A 53/A 53M Pipe 4 - Schedule 40 - 7.2440945	PIPE, STD, 100NS [4"]	ASTM A 53/A 53M Pipe 4 - Schedule 40	A53

Ø100 NS ROOF NOZZLE
AS PER ECN NO. 1

MARK: M1621
QTY: 6

WEIGHT/SPOOL: 9 KG

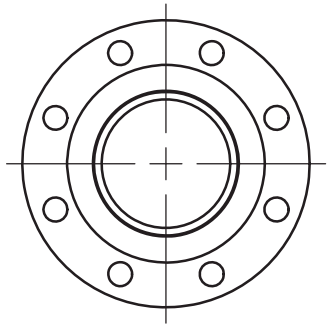

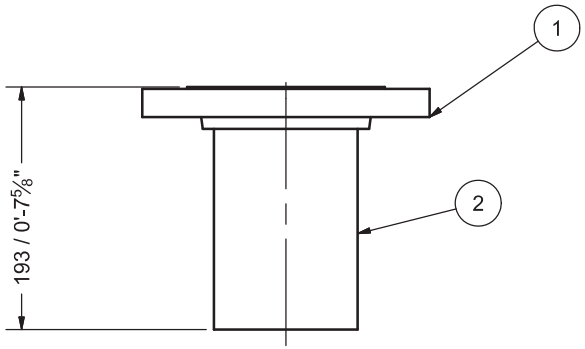

M1621 QTY	
Tank No.	QTY
1	1
2	1
3	1
4	1
5	1
6	1
TOTAL	6

REVISION HISTORY		
REV	DESCRIPTION	DATE
3	THIS SHEET ADDED AS PER ECN-001	7/7/2017

AS-BUILT
BY Inukshuk Construction Ltd. DATE 2018/07/19

REGISTERED PROFESSIONAL ENGINEER
J. BROWN
LICENSEE
NT/NU
16-Jul-2017
Permit Number: P471

DRAWN Jacob Saunders	4/13/2017	AEM Meliadine Fuel Storage Tanks
CHECKED		
QA		TITLE M1621 - 100NS ROOF NOZZLE
MFG		
APPROVED		
SIZE A3	DWG NO 295-M16	REV 3
SCALE		SHEET 21 OF 22

Parts List				
ITEM	ITEM QTY	CUT (MM)	DESCRIPTION	MATERIAL
1	1	152	L100X100X10 [4"X4"X3/8"]	G40.21M 350W
2	1	152	FB150X6 [6"X1/4"]	G40.21M 300W
3	1	305	50NS [2"] PIPE SCH. 40	A53 ERW

wsp

SHOP DRAWING
DATA SHEET

Affixing this stamp confirms that an administrative approval and/or a verification of compliance with shop drawings or specifications was made, but does not entail the liability of the author of the work or its owner with regards to this shop drawing or data sheet, for which the contractor is the sole responsible.

☑ Reviewed ☐ Reviewed as noted
☐ Rejected ☐ Filed for records

The contractor, supplier and/or sub-contractor is responsible for: comfirming and coordinating all quantities and dimensions; selecting fabrication processes and techniques of construction; coordinating his or her work with that of all other trades and performing all work in a safe and satisfactory manner.

By: J. morliere Date: 2017/07/14

Project #: 151-06440-40

PIPE SUPPORT TYPE 1
MARK: M17101
QTY: 72

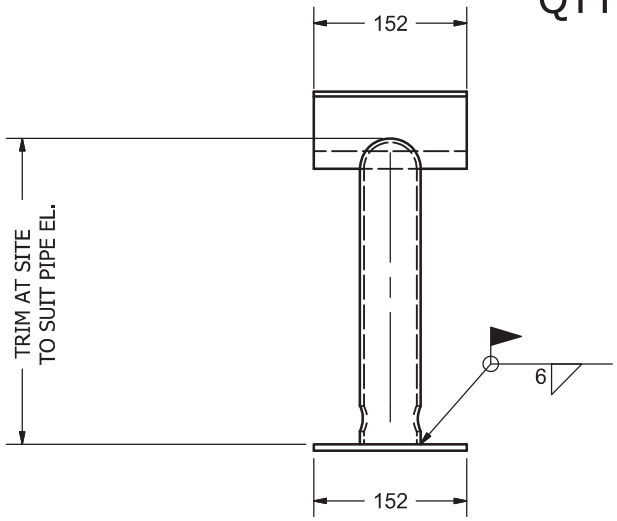

PIPE SUPPORT
SCALE 1/5

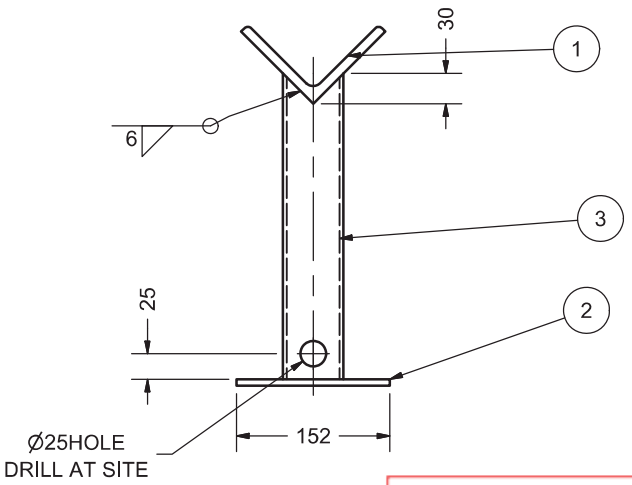

QTY PER TANK	
Tank No.	QTY
1	20
2	16
3	12
4	12
5	6
6	6
TOTAL	72

AS-BUILT
BY Inukshuk Construction Ltd. DATE 2018/07/19

REGISTERED PROFESSIONAL ENGINEER
J.C. BROWN
LICENSEE
NT/NU
16-Jul-2017
Permit Number: P471

NOTE:
ALL DIMENSIONS ARE IN MM UNLESS OTHERWISE NOTED

DRAWN Jacob Saunders	4/13/2017	PIPE SUPPORT
CHECKED		
QA		TITLE
MFG		MISC. SUPPORTS AND BRACKETS
APPROVED		
		SIZE A3 / DWG NO 295-M17 / REV 2
		SCALE / SHEET 1 OF 5

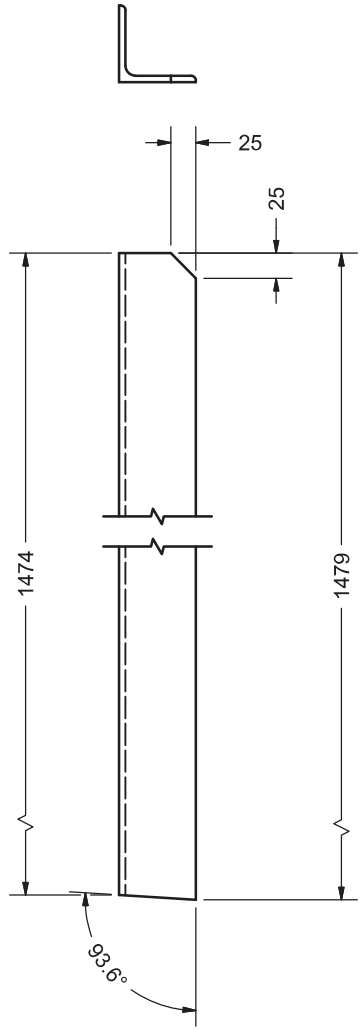

QTY PER TANK	
Tank No.	QTY
1	93
2	77
3	41
4	53
5	21
6	21
TOTAL	306

ROOF HANDRAIL POST
MARK M17201
QTY: 310
L76x76X6 [L3"X3"X1/4"] G40.21M 350W
SCALE 1/5

1

AS-BUILT
BY Inukshuk Construction Ltd. DATE 2018/07/19

REGISTERED PROFESSIONAL ENGINEER
J. G. BROWN
LICENSEE
NT/NU
16-Jul-2017
Permit Number: P471

REVISION HISTORY		
REV	DESCRIPTION	DATE
1	ANGLE SIZE CHG TO 76X76X6 (3"X3"X1/4")	4/27/2017

DRAWN Jacob Saunders	4/13/2017	ROOF TOP HANDRAIL POST
CHECKED		
QA		TITLE
MFG		MISC. SUPPORTS AND BRACKETS
APPROVED		
		SIZE A3 / DWG NO 295-M17 / REV 2
		SCALE / SHEET 2 OF 5

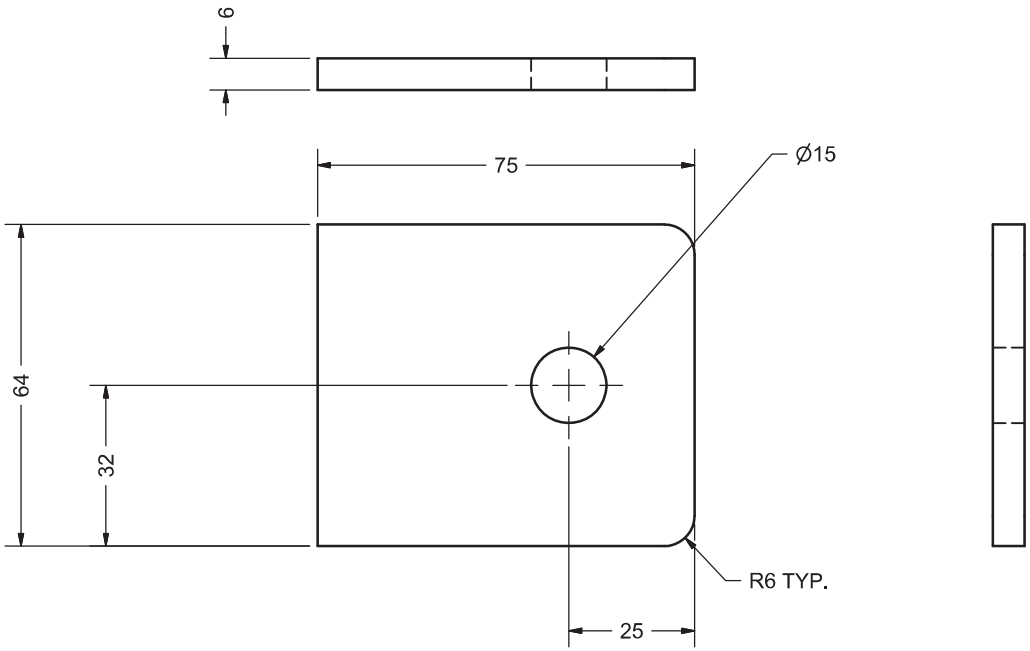

QTY PER TANK	
Tank No.	QTY
1	8
2	8
3	6
4	6
5	4
6	4
TOTAL	36

GROUNDING LUG
MARK M17301
QTY: 36
FB 75X6 [3"X1/4"]
STAINLESS STEEL 316
SCALE 1 : 1

AS-BUILT
BY Inukshuk Construction Ltd. DATE 2018/07/19

REGISTERED PROFESSIONAL ENGINEER
J. G. BROWN
LICENSEE
NT/NU
16-Jul-2017
Permit Number: P471

DRAWN Jacob Saunders	4/13/2017	GROUNDING LUG
CHECKED		TITLE
QA		MISC. SUPPORTS AND BRACKETS
MFG		
APPROVED		
SIZE A3	DWG NO 295-M17	REV 2
SCALE		SHEET 3 OF 5

CUT LIST					UNIT QTY PER TANK					
MARK	QTY	CUT MM	DESCRIPTION	MATERIAL	TK #1	TK #2	TK #3	TK #4	TK #5	TK #6
M17401	6	400	L100X100X6 [L4"X4"X1/4"] TEMPERATOR SENSOR	G40.21M 350W	1	1	1	1	1	1
M17402	45	400	L75X75X6 [L3"X3"X1/4"] PIPING & ELECTRICAL BRACKET	G40.21M 350W	14	14	6	7	2	2

AS-BUILT

BY Inukshuk Construction Ltd. DATE 2018/07/19

REGISTERED PROFESSIONAL ENGINEER
J.S. BROWN
LICENSEE
NT/NU
16-Jul-2017

Permit Number: P471

DRAWN Jacob Saunders	4/13/2017	MISC BRACKETS
CHECKED		TITLE
QA		MISC. SUPPORTS AND BRACKETS
MFG		
APPROVED		
		SIZE A3 / DWG NO 295-M17 / REV 2
		SCALE / SHEET 4 OF 5

Parts List

ITEM	ITEM QTY	CUT (MM)	PART NUMBER	DESCRIPTION	STOCK NUMBER	MATERIAL
2	1	1230	AISC - L 3 x 3 x 3/8 - 48.426	Angle Steel	L 3 x 3 x 3/8	G40.21 350w
3	1	914	AISC - C 6 x 8.2 - 36	U-Shape	C 6 x 8.2	G40.21 350w
4	1	203	AISC - 6x1/4 - 8	Flat Bar Steel	6x1/4	G40.21 350w
5	1	229	AISC - 6x1/4 - 9	Flat Bar Steel	6x1/4	G40.21 350w

TOP VIEW
SCALE 1/10

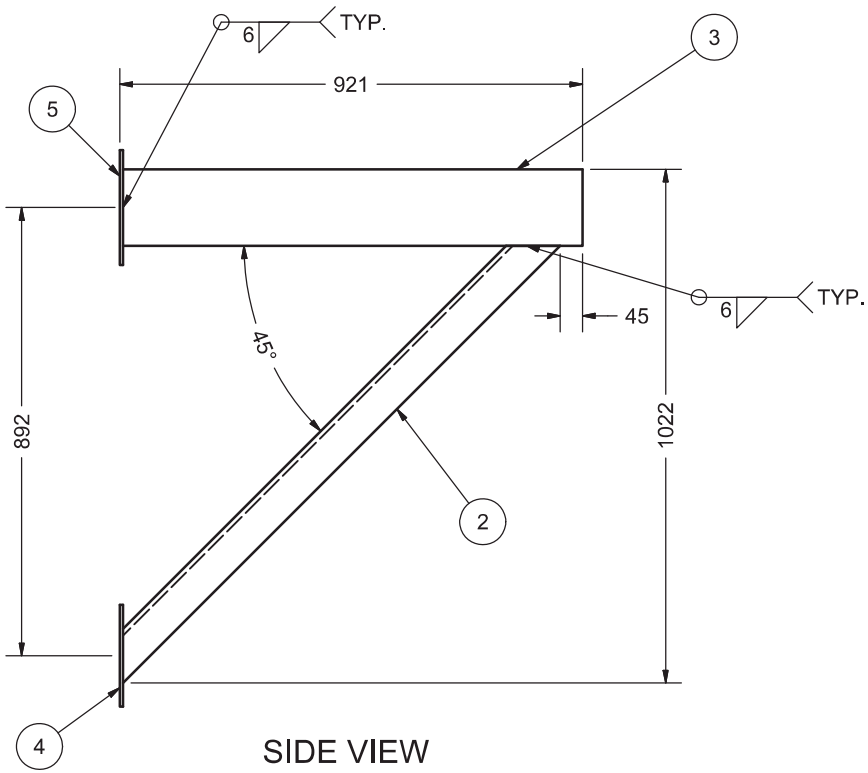

SIDE VIEW
SCALE 1/10

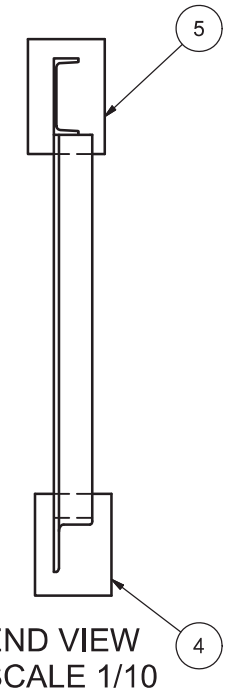

END VIEW
SCALE 1/10

PIPE SUPPORT FOR 400NS
VENT SUPPORT FOR TANK NO. 1 & 2
MARK: M17501
QTY: 4
2 AS SHOWN
2 MIRROR

FINISH: SHOP SANDBLAST

AS-BUILT
BY Inukshuk Construction Ltd. DATE 2018/07/19

PROFESSIONAL ENGINEER
G. BROWN
LICENSEE
NT/NU
16-Jul-2017
Permit Number: P471

REVISION HISTORY		
REV	DESCRIPTION	DATE
2	THIS SHEET ADDED	7/7/2017

DRAWN Jacob Saunders	4/13/2017	
CHECKED		
QA		TITLE MISC. SUPPORTS AND BRACKETS
MFG		
APPROVED		
		SIZE A3 / DWG NO 295-M17 / REV 2
		SCALE / SHEET 5 OF 5

PARTS LIST FOR ONE (1) ASSY, FOUR (4) PER TANK, SIXTEEN (16) REQUIRED				
ITEM	ITEM QTY	CUT (MM)	DESCRIPTION	MATERIAL
M18101	1	341	5/8"THK X 66 WIDE PLATE, SEE DETAIL	G40.21M 300W
M18102	1	373	2 1/2" STD PIPE	A53
M18103	1		DAVIT ARM, SEE DETAIL	
M18104	1	198	16 [5/8"] DIA LG SEE DETAIL	Steel
M18105	1		EYE-BOLT 5/8"DIA X 12" LG CROSBY G291	FORGED STEEL
M18106	2		5/8"-11UNC Hex Nuts (Inch Series) Heavy Hex Nut	A194 GR4

FINISH: SANDBLAST TO SSPC-6

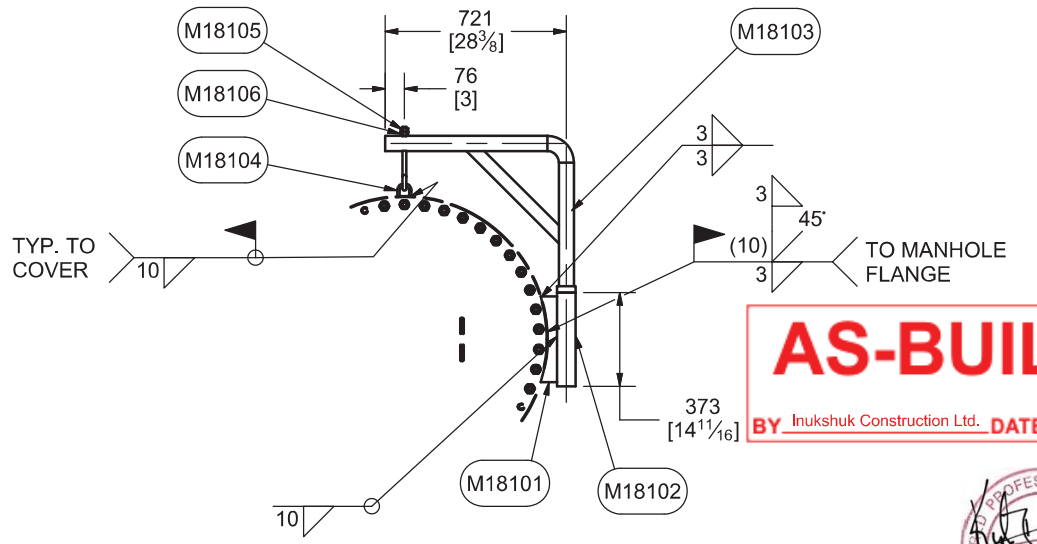

DAVIT ASSEMBLY
QTY: 16
MARK: M18100
SCALE 1/20

AS-BUILT
BY Inukshuk Construction Ltd. DATE 2018/07/19

REGISTERED PROFESSIONAL ENGINEER
J.D. BROWN
LICENSEE
NT/NU
10-Jan-2018

Permit Number: P471

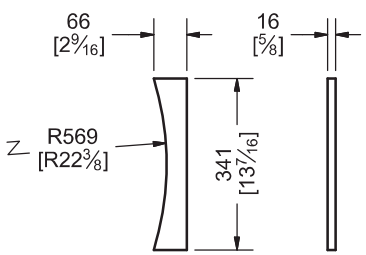

Pc M18101 DETAIL
SCALE 1/10

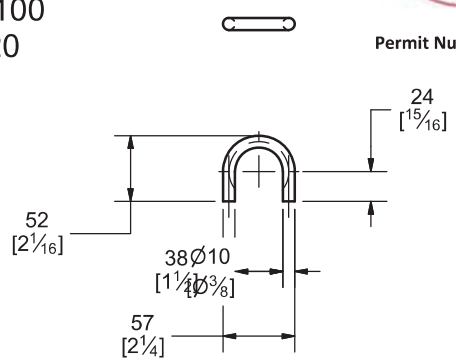

Pc M18104 DETAIL
SCALE 1/4

PARTS LIST FOR ONE (1) DAVIT ARM, FOUR (4) PER TANK, SIXTEEN (16) REQ'D				
ITEM	ITEM QTY	CUT (MM)	DESCRIPTION	MATERIAL
M18108	1	645	2"NS XH PIPE	A53
M18109	1	25	2 1/2"NS STD PIPE	A53
M18110	1		2"NS HX ELBOW BW 90DEG L.R.	A234
M18111	1	890	2"NS XH PIPE	A53
M18112	1	520	FB10X50 [3/8"X2"]	G40.21M 300W

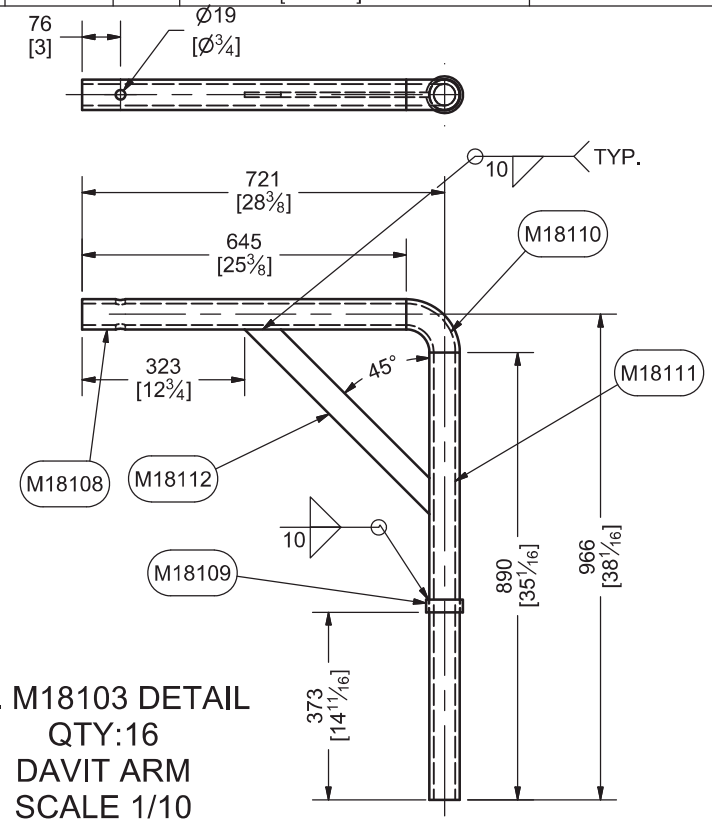

Pc. M18103 DETAIL
QTY:16
DAVIT ARM
SCALE 1/10

DRAWN MARC LOSIER	4/13/2017	900MM [36"] NS FOR TK1, 2, 3, 4	
CHECKED			
QA		TITLE	
MFG		MANHOLE COVER DAVIT	
APPROVED			
		SIZE A3	DWG NO 295-M18	REV
		SCALE	SHEET 1 OF 2

PARTS LIST FOR ONE (1) ASSY, TWO (2) PER TANK, FOUR (4) REQUIRED				
ITEM	ITEM QTY	CUT (MM)	DESCRIPTION	MATERIAL
M18201	1	295	3/8"THK X 62 WIDE PLATE, SEE DETAIL	G40.21M 300W
M18202	1	373	2 1/2" STD PIPE	A53
M18203	1		DAVIT ARM, SEE DETAIL	
M18204	1	198	10 [3/8"] DIA LG SEE DETAIL	Steel
M18205	1		EYE-BOLT 3/8"DIA X 8" LG Crosby G-291	FORGED STEEL
M18206	2		3/8"-16UNC Hex Nuts (Inch Series) Heavy Hex Nut	A194 GR4

PARTS LIST FOR ONE (1) DAVIT ARM, 2 PER TANK, FOUR (4) REQ'D				
ITEM	ITEM QTY	CUT (MM)	DESCRIPTION	MATERIAL
M18208	1	569	2"NS XH PIPE	A53
M18209	1	25	2 1/2"NS STD PIPE	A53
M18210	1		2"NS XH ELBOW BW 90DEG L.R.	A234
M18211	1	787	2"NS XH PIPE	A53
M18212	1	520	FB10X50 [3/8"X2"]	G40.21M 300W

FINISH: SANDBLAST TO SSPC-6

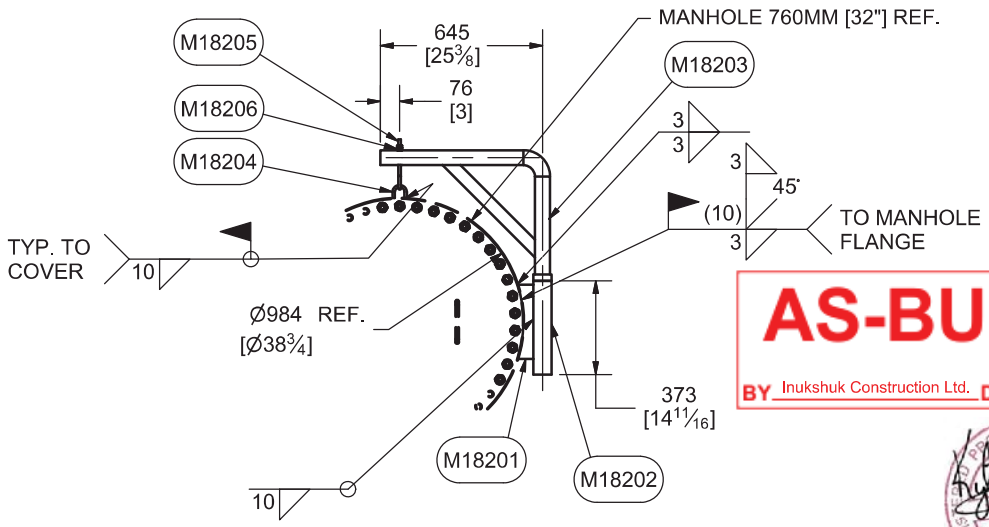

AS-BUILT
BY Inukshuk Construction Ltd. DATE 2018/07/19

REGISTERED PROFESSIONAL ENGINEER
J. BROWN
LICENSEE
NT/NU
10-Jan-2018

Permit Number: P471

DAVIT ASSEMBLY
QTY: 4
MARK M18200
SCALE 1/20

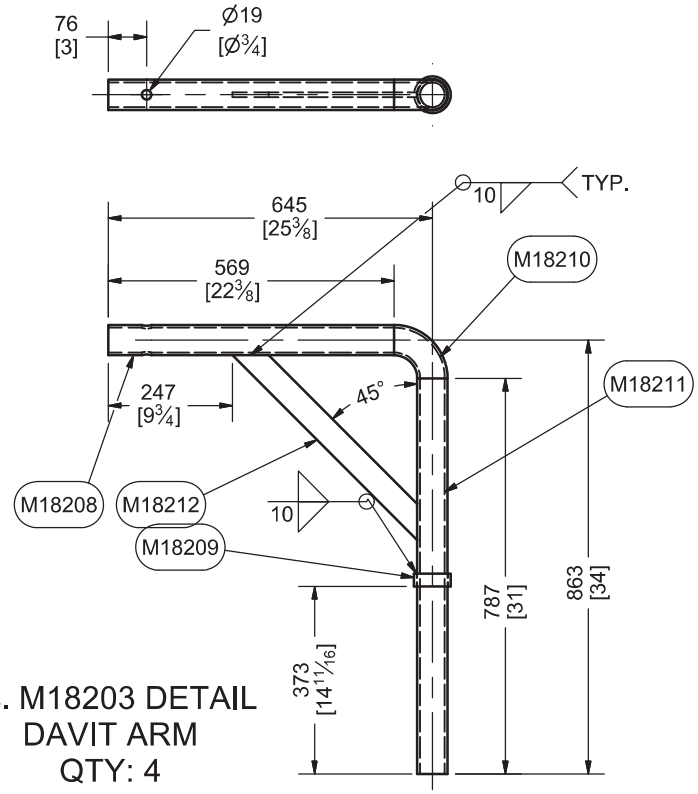

Pc. M18203 DETAIL
DAVIT ARM
QTY: 4
SCALE 1/10

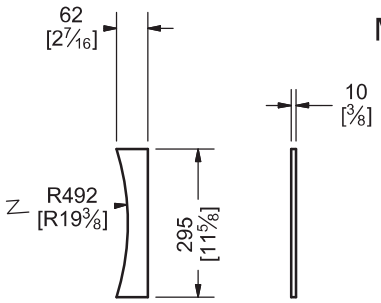

Pc M18201 DETAIL
QTY: 4
SCALE 1/10

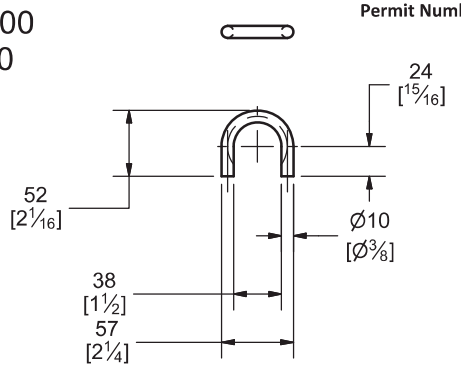

Pc M18104 DETAIL
SCALE 1/4

DRAWN MARC LOSIER	4/13/2017	760MM [32"] NS FOR TK 5&6
CHECKED		
QA		TITLE
MFG		MANHOLE COVER DAVIT
APPROVED		
		SIZE A3 / DWG NO 295-M18 / REV
		SCALE / SHEET 2 OF 2

BILL OF MATERIALS

MARK	QTY.	DESCRIPTION	MATERIAL	MTR	WT #'s
1	1	C6@10.5# x 3'-4" LG (CBE)	G40.21-300W	C	–
2	2	C6@10.5# x 3'-1 15/16" LG (COE/POE)	G40.21-300W	C	–
3	1	C6@10.5# x 2'-8 5/8" LG (CBE)	G40.21-300W	C	–
4	1	3/8" x 3" x 3" ANGLE x 2'-11 11/16" LG (CBE)	G40.21-300W	C	–
5	2	3/8" THK x 3" x 5"	G40.21-260W	C	–
6	4	1/4" THK x 6" x 10" c/w 2" RADIUS CORNERS	G40.21-260W	C	–
7	16	5/8"ø x 1 3/4" LG HEX HD BOLT c/w (1) NUT &	A325 GALV	C	–
		LOCK WASHER AND (2) FLAT WASHERS			
8	2	3/8" x 3" x 3" ANGLE x 3'-9 1/8" LG (CBE)	G40.21-300W	C	–
9	2	1/4" THK x 5" x 5 3/4" SEE DETAIL	G40.21-260W	C	–
10	4	1/4" THK x 6" x 6"	G40.21-260W	C	–

BILLING FOR ONE TANK SHOWN, TWO (2) REQUIRED

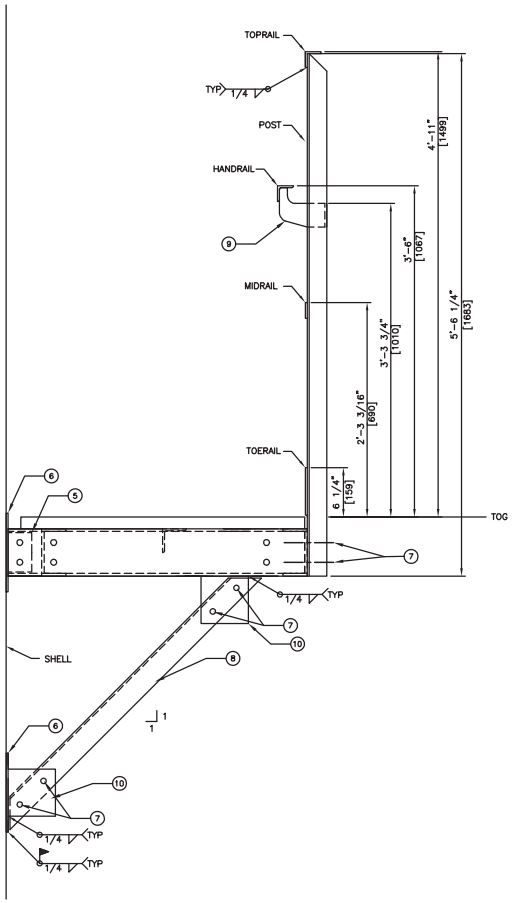

PLATFORM ELEVATION DETAIL

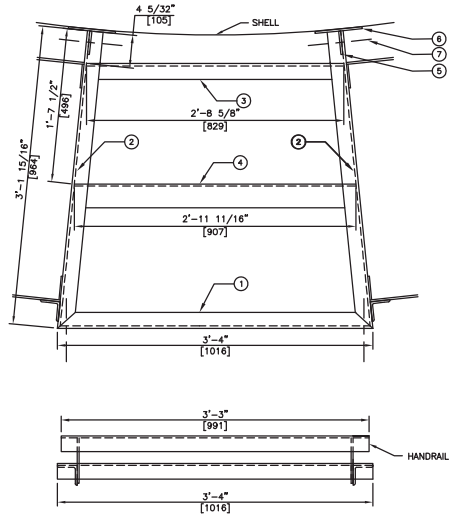

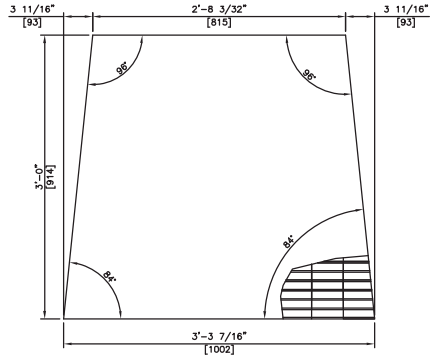

GRATING DETAIL

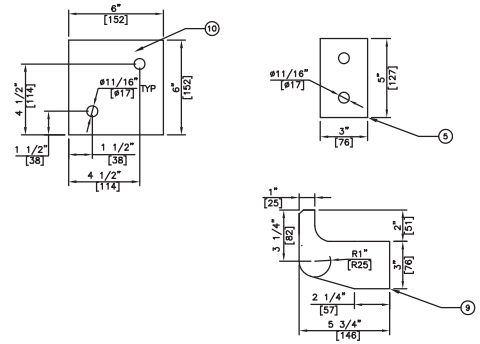

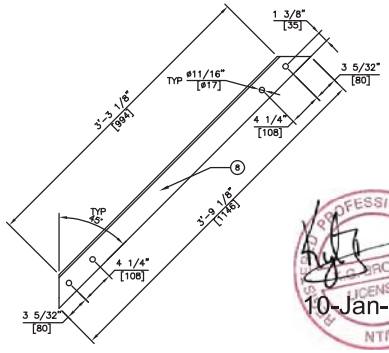

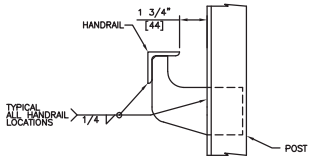

TYPICAL HANDRAIL/POST DETAIL

TYPICAL HANDRAIL DETAIL

TOPRAIL – 1/4" x 2" x 2" ANGLE
HANDRAIL – 1/4" x 2" x 2" ANGLE
MIDRAIL – 1/4" x 2" FLATBAR
TOERAIL – 1/4" x 6" FLATBAR
POST – 1/4" x 2 1/2" x 2 1/2" ANGLE
GRATING – 19-W-4 1 1/2" DEEP x 3/16"
GALVANIZED SERRATED BAR GRATING

**HANDRAIL LOCATED ON OUTSIDE ONLY – BOLTED TO PLATFORM

**ALL GRATING TO BE SECURED TO PLATFORM FRAME USING SADDLE CLIPS (BOLTED).

PLATFORM IS CAPABLE OF SUPPORTING A MOVING CONCENTRATED LOAD OF 1000LBS, AND HANDRAIL LOAD OF 200LBS IN ANY DIRECTION.

10-Jan-2018

Permit Number: P471

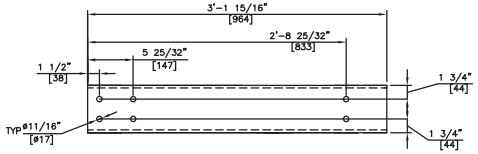

MARK 2 – RIGHT HAND SHOWN
LEFT HAND OPPOSITE

SLOTS MAY BE SHOP LOCATED TO MATCH HANDRAIL POST

AS-BUILT
BY Inukshuk Construction Ltd. DATE 2018/07/19

REV.	DATE	DRWN.	APP'D.	DESCRIPTION
0	5-MAY-17	ME	KB	ISSUED FOR CONSTRUCTION
A	17-APR-17	ME	KB	ISSUED FOR APPROVAL

REVISIONS

SUB-ARC SYSTEMS INC.

CUSTOMER: AGNICO EAGLE MINES LIMITED – MELIADINE PROJECT
TITLE: MID PLATFORM DETAIL
PROJECT NO.: 6515
LOCATION: RANKIN INLET, NUNAVUT
TANK NO.: TANK TAG: TK #5 & #6
SCALE: 3/4" = 1'-0"
W.O.: 17-03
DRWN. No.: 17-03-5-001
REV.: 0
DATE: 17-APR-17

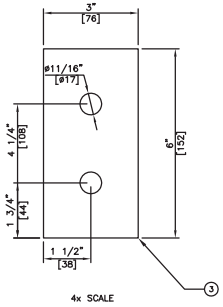

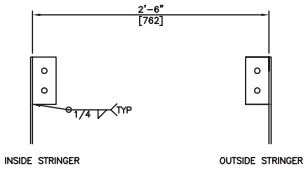

STRINGER CLIP TO PLATFORM

BILL OF MATERIALS

MARK	QTY.	DESCRIPTION	MATERIAL	MTR	WT #'s
1	1	1/4" THK x 12" x 11'-1 9/16" LG SEE DETAIL	G40.21-260W	C	–
2	1	1/4" THK x 12" x 12'-7 13/16" LG SEE DETAIL	G40.21-260W	C	–
3	6	1/4" THK x 3" x 6"	G40.21-260W	C	–
4	12	5/8"ø x 1 3/4" LG HEX HD BOLT c/w (1) NUT & LOCK WASHER AND (2) FLAT WASHERS	A325 GALV	C	–

BILLING FOR ONE TANK SHOWN, TWO REQUIRED

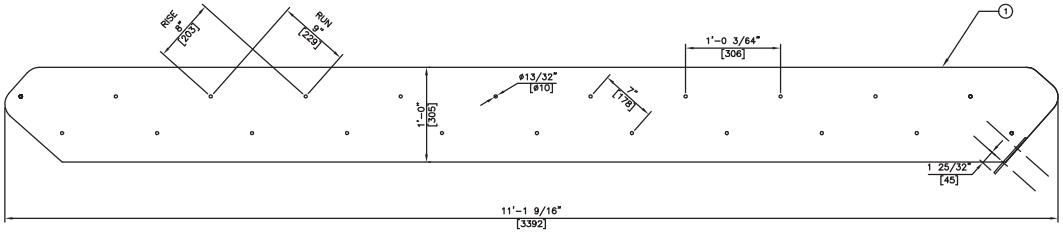

INSIDE BOTTOM STRINGER

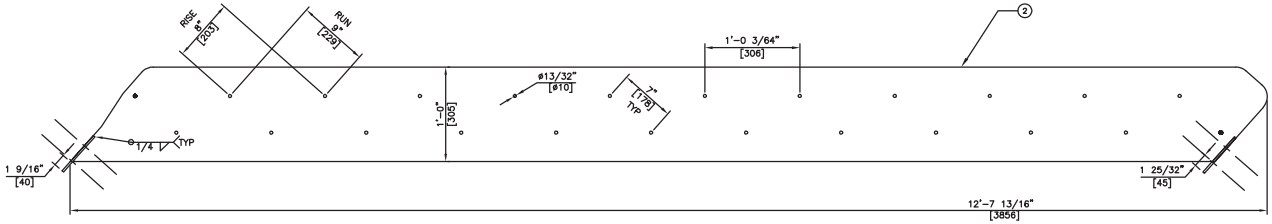

INSIDE STRINGER

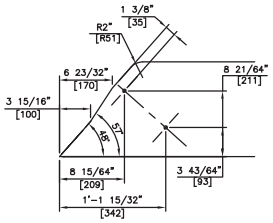

BOTTOM @ PLATFORM

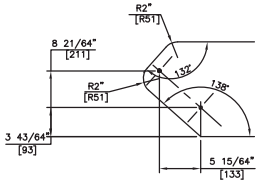

BOTTOM

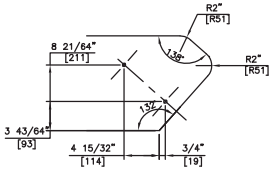

TOP

AS-BUILT

BY Inukshuk Construction Ltd. DATE 2018/07/19

REGISTERED PROFESSIONAL ENGINEER
R. G. BROWN
LICENSEE
NT/NU
10-Jan-2018

Permit Number: P471

NOTE: MARK 3 IS PLACED SAME SIDE AS STAIR.

REV.	DATE	DRWN.	APP'D.	DESCRIPTION
0	5-MAY-17	ME	KB	ISSUED FOR CONSTRUCTION
A	17-APR-17	ME	KB	ISSUED FOR APPROVAL

REVISIONS

SUB-ARC SYSTEMS INC.

CUSTOMER: AGNICO EAGLE MINES LIMITED – MELIADINE PROJECT

TITLE: INSIDE STRINGER DETAIL

PROJECT NO.: 6515

LOCATION: RANKIN INLET, NUNAVUT

TANK NO.: TANK TAG: TK #5 & #6

SCALE: 3/4" = 1'-0"

W.O.: 17-03

DRWG. No.: 17-03-5-002

Rev.: 0

DATE: 17-APR-17

BILL OF MATERIALS

MARK	QTY.	DESCRIPTION	MATERIAL	MTR	WT #'s
1	1	1/4" THK x 12" x 12'-2 5/32" LG SEE DETAIL	G40.21-260W	C	–
2	1	1/4" THK x 12" x 13'-8 1/8" LG SEE DETAIL	G40.21-260W	C	–
3	6	1/4" THK x 3" x 6"	G40.21-260W	C	–
4	12	5/8"ø x 1 3/4" LG HEX HD BOLT c/w (1) NUT &	A325 GALV	C	–
		SERRATED BAR GRATING c/w CHECKER PLATE NOSE			
5	23	STAIR TREAD 9 3/4" WIDE x 30" LG x 1 1/2" x 3/16"	G40.21-260W	C	–
		SERRATED c/w CHECKER PLATE NOSE			
6	92	3/8"ø x 1 1/2" LG HEX HD BOLT c/w (1) NUT &	A325 GALV	C	–
		LOCK WASHER AND (2) FLAT WASHERS			

BILLING FOR ONE TANK SHOWN, TWO REQUIRED

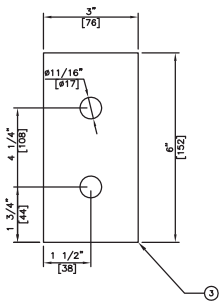

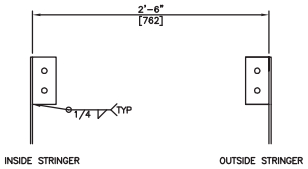

STRINGER CLIP TO PLATFORM

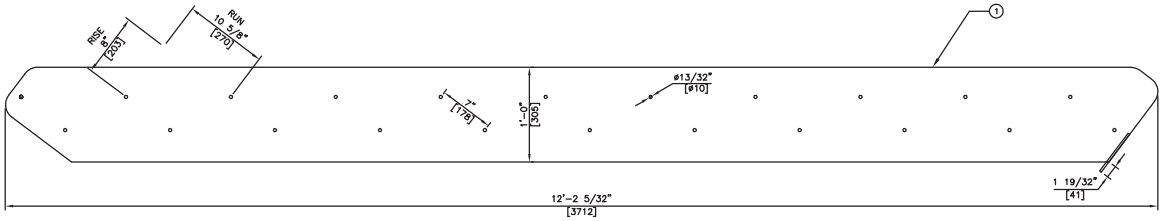

OUTSIDE BOTTOM STRINGER

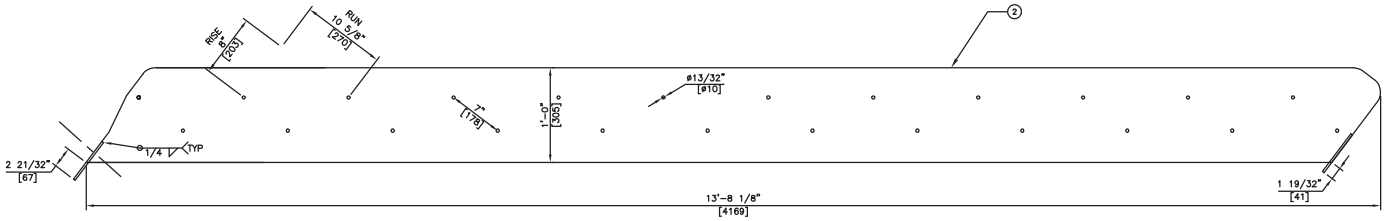

OUTSIDE STRINGER

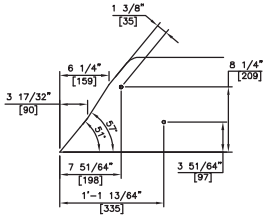

BOTTOM @ PLATFORM

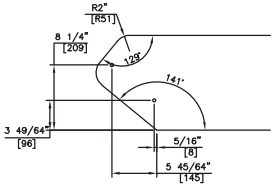

BOTTOM

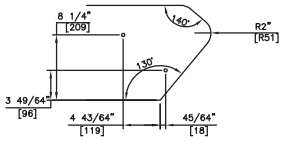

TOP

10-Jan-2018

Permit Number: P471

AS-BUILT
BY Inukshuk Construction Ltd. DATE 2018/07/19

NOTE: MARK 3 IS PLACED SAME SIDE AS STAIR.

REV.	DATE	DRWN.	APP'D.	DESCRIPTION
0	5-MAY-17	ME	KB	ISSUED FOR CONSTRUCTION
A	17-APR-17	ME	KB	ISSUED FOR APPROVAL

REVISIONS

SUB-ARC SYSTEMS INC.

CUSTOMER: AGNICO EAGLE MINES LIMITED – MELIADINE PROJECT

TITLE: OUTSIDE STRINGER DETAIL

PROJECT NO.: 6515

LOCATION: RANKIN INLET, NUNAVUT

TANK NO.: TANK TAG: TK #5 & #6

SCALE: 3/4" = 1'-0"

W.O.: 17-03

DRWG. No.: 17-03-5-003

REV.: 0

DATE: 17-APR-17

BILL OF MATERIALS

MARK	QTY.	DESCRIPTION	MATERIAL	MTR	WT #'s
1	2	3/8" x 3" x 3" ANGLE x 3'-3" LG (PBE)	G40.21-300W	C	–
2	6	1/4" THK x 2 5/8" x 7" LG	G40.21-260W	C	–
3	2	3/8" x 3" x 3" ANGLE x 3'-9 1/8" LG	G40.21-300W	C	–
4	14	5/8"ø x 1 3/4" LG HEX HD BOLT c/w (1) NUT & LOCK WASHER AND (2) FLAT WASHERS	A325 GALV	C	–
5	5	1/4" THK x 6" x 10" c/w 2" RADIUS CORNERS	G40.21-260W	C	–
6	1	C6@10.5# x 2'-11" LG	G40.21-300W	C	–
7	4	1/4" THK x 6" x 6"	G40.21-260W	C	–

BILLING FOR ONE TANK SHOWN, TWO REQUIRED

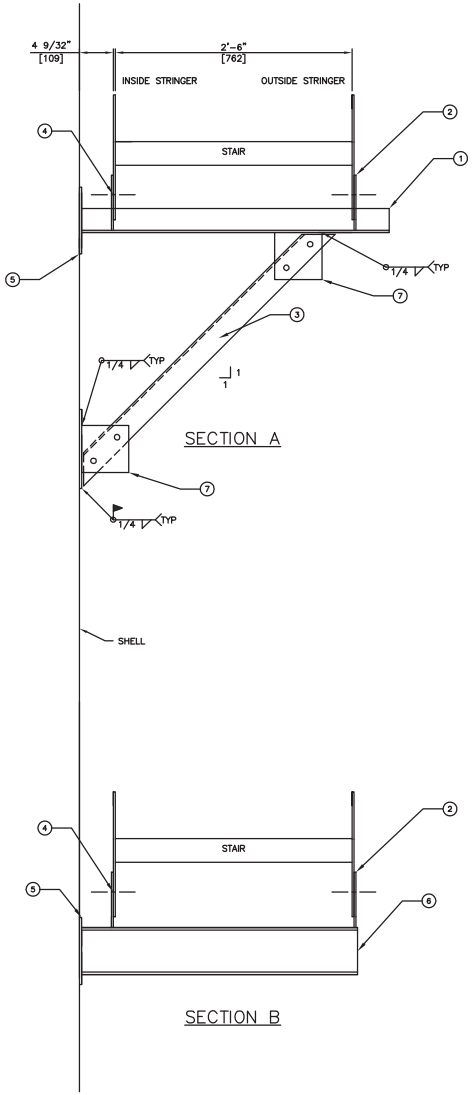

SECTION A

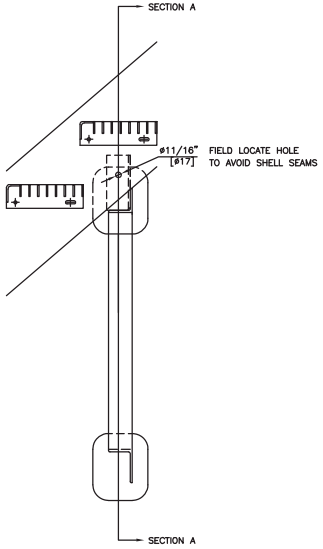

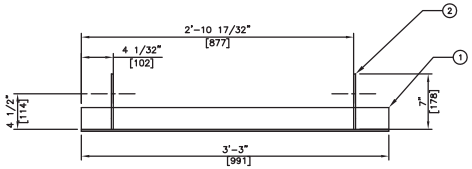

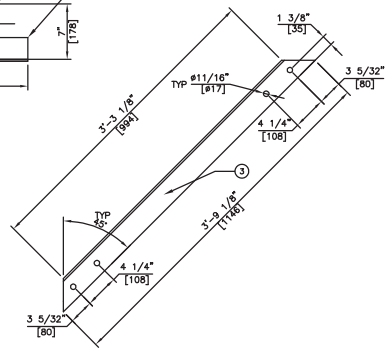

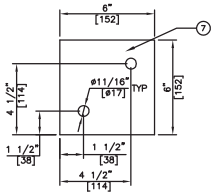

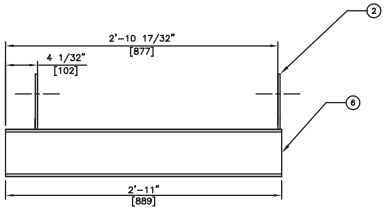

SECTION B

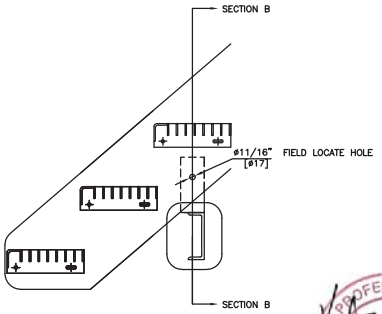

CHANNEL SUPPORT IS FOR BOTTOM OF STAIRS ONLY.

NOTE: MAXIMUM SUPPORT SPACING IS EVERY 7 STAIRS.

AS-BUILT
BY Inukshuk Construction Ltd. DATE 2018/07/19

REGISTERED PROFESSIONAL ENGINEER
K. BROWN
LICENSEE
NT/NU
10-Jan-2018

Permit Number: P471

REV.	DATE	DRWN.	APP'D.	DESCRIPTION
0	5-MAY-17	ME	KB	ISSUED FOR CONSTRUCTION
A	17-APR-17	ME	KB	ISSUED FOR APPROVAL

REVISIONS

SUB-ARC SYSTEMS INC.

CUSTOMER: AGNICO EAGLE MINES LIMITED – MELIADINE PROJECT

TITLE: STAIR STRINGER SUPPORTS

PROJECT NO.: 6515

LOCATION: RANKIN INLET, NUNAVUT

TANK NO.: TANK TAG: TK #5 & #6

SCALE: 3/4" = 1'-0"

W.O.: 17-03

DRWG. No.: 17-03-5-004

REV.: 0

DATE: 17-APR-17

BILL OF MATERIALS

MARK	QTY.	DESCRIPTION	MATERIAL	MTR	WT #'s
1	1	C6@10.5# x 3'-4" LG (CBE)	G40.21-300W	C	–
2	2	C6@10.5# x 3'-1 15/16" LG (COE/POE)	G40.21-300W	C	–
3	1	C6@10.5# x 2'-8 5/8" LG (CBE)	G40.21-300W	C	–
4	1	3/8" x 3" x 3" ANGLE x 2'-11 11/16" LG (CBE)	G40.21-300W	C	–
5	2	3/8" THK x 3" x 5"	G40.21-260W	C	–
6	4	1/4" THK x 6" x 10" c/w 2" RADIUS CORNERS	G40.21-260W	C	–
7	20	5/8"ø x 1 3/4" LG HEX HD BOLT c/w (1) NUT & LOCK WASHER AND (2) FLAT WASHERS	A325 GALV	C	–
8	2	3/8" x 3" x 3" ANGLE x 3' - 9 1/8" LG (CBE)	G40.21-300W	C	–
9	4	1/4" THK x 5" x 5 3/4" SEE DETAIL	G40.21-260W	C	–

BILLING FOR ONE TANK SHOWN, TWO (2) REQUIRED

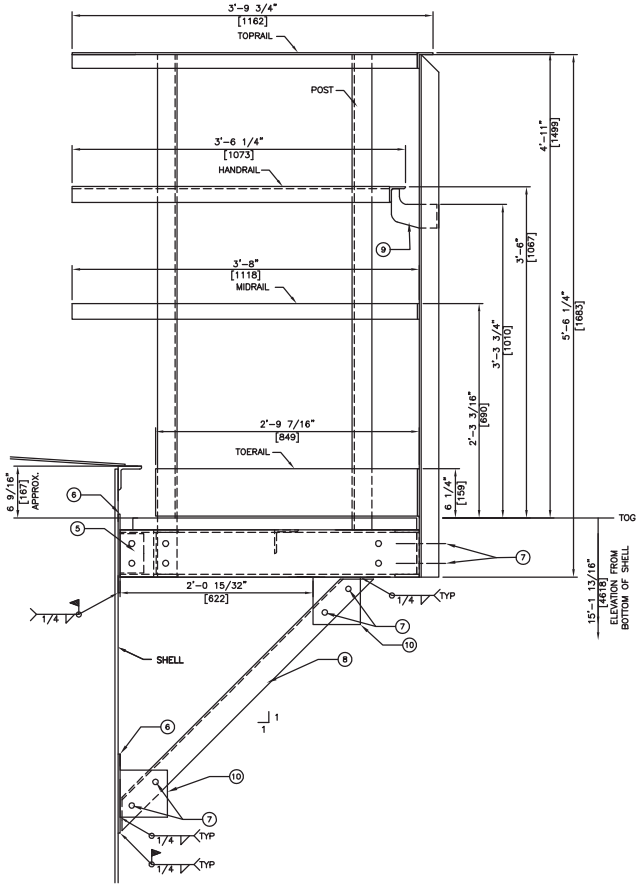

PLATFORM ELEVATION DETAIL

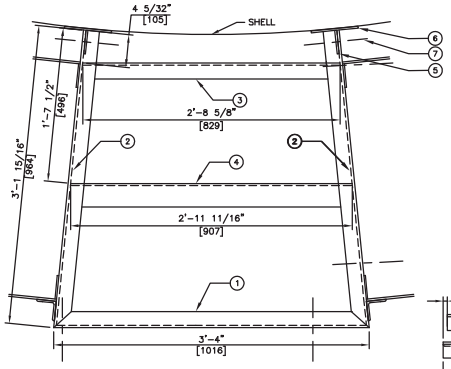

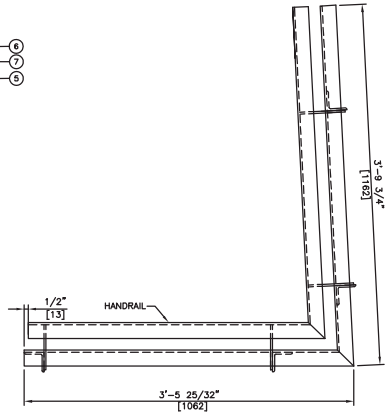

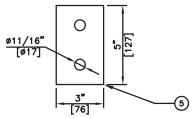

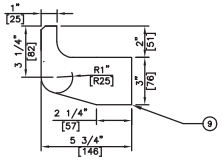

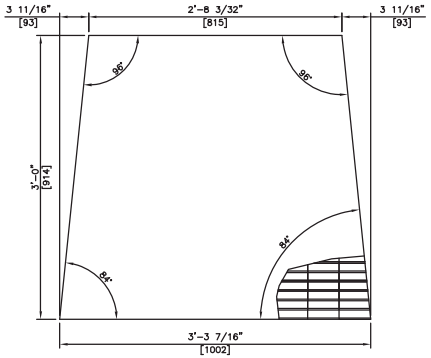

GRATING DETAIL

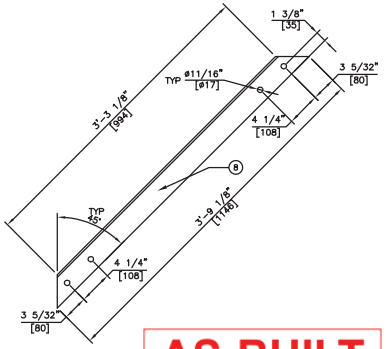

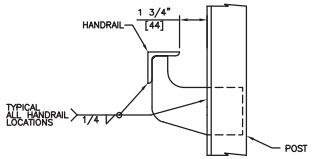

TYPICAL HANDRAIL/POST DETAIL

TYPICAL HANDRAIL DETAIL

TOPRAIL – 1/4" x 2" x 2" ANGLE
HANDRAIL – 1/4" x 2" x 2" ANGLE
MIDRAIL – 1/4" x 2" FLATBAR
TOERAIL – 1/4" x 6" FLATBAR
POST – 1/4" x 2 1/2" x 2 1/2" ANGLE
GRATING – 19-W-4 1 1/2" DEEP x 3/16" GALVANIZED SERRATED BAR GRATING

**HANDRAIL LOCATED ON OUTSIDE ONLY – BOLTED TO PLATFORM

**ALL GRATING TO BE SECURED TO PLATFORM FRAME USING SADDLE CLIPS (BOLTED).

FIELD TO TRIM HANDRAIL OVER TANK ROOF TO MATE WITH PERIMETER HANDRAIL

FIELD TO TRIM HANDRAIL OVER TANK ROOF TO MATE WITH PERIMETER HANDRAIL

PLATFORM IS CAPABLE OF SUPPORTING A MOVING CONCENTRATED LOAD OF 1000LBS, AND HANDRAIL LOAD OF 200LBS IN ANY DIRECTION.

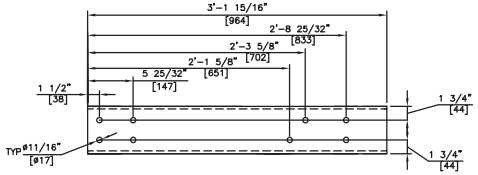

MARK 2 – RIGHT HAND SHOWN
LEFT HAND OPPOSITE

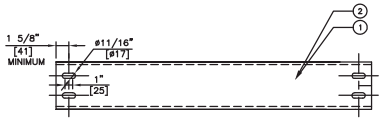

SLOTS MAY BE SHOP LOCATED TO MATCH HANDRAIL POST

AS-BUILT
BY Inukshuk Construction Ltd. DATE 2018/07/19

REGISTERED PROFESSIONAL ENGINEER
K. BROWN
LICENSEE
NTNU
10-Jan-2018

Permit Number: P471

REV.	DATE	DRWN.	APP'D.	DESCRIPTION
0	5-MAY-17	ME	KB	ISSUED FOR CONSTRUCTION
A	17-APR-17	ME	KB	ISSUED FOR APPROVAL

REVISIONS

SUB-ARC SYSTEMS INC.

CUSTOMER: AGNICO EAGLE MINES LIMITED – MELIADINE PROJECT
TITLE: TOP PLATFORM DETAIL
PROJECT NO.: 6515
LOCATION: RANKIN INLET, NUNAVUT
TANK NO.: TANK TAG: TK #5 & #6
SCALE: 3/4" = 1'-0"
DATE: 17-APR-17
W.O.: 17-03
DRWG. No.: 17-03-5-005
Rev.: 0

BILL OF MATERIALS

MARK	QTY.	DESCRIPTION	MATERIAL	MTR	WT #'s
1	4	1/4" THK x 5" x 5 3/4" SEE DETAIL	G40.21-260W	C	–

BILLING FOR ONE TANK SHOWN, FOUR (4) REQUIRED

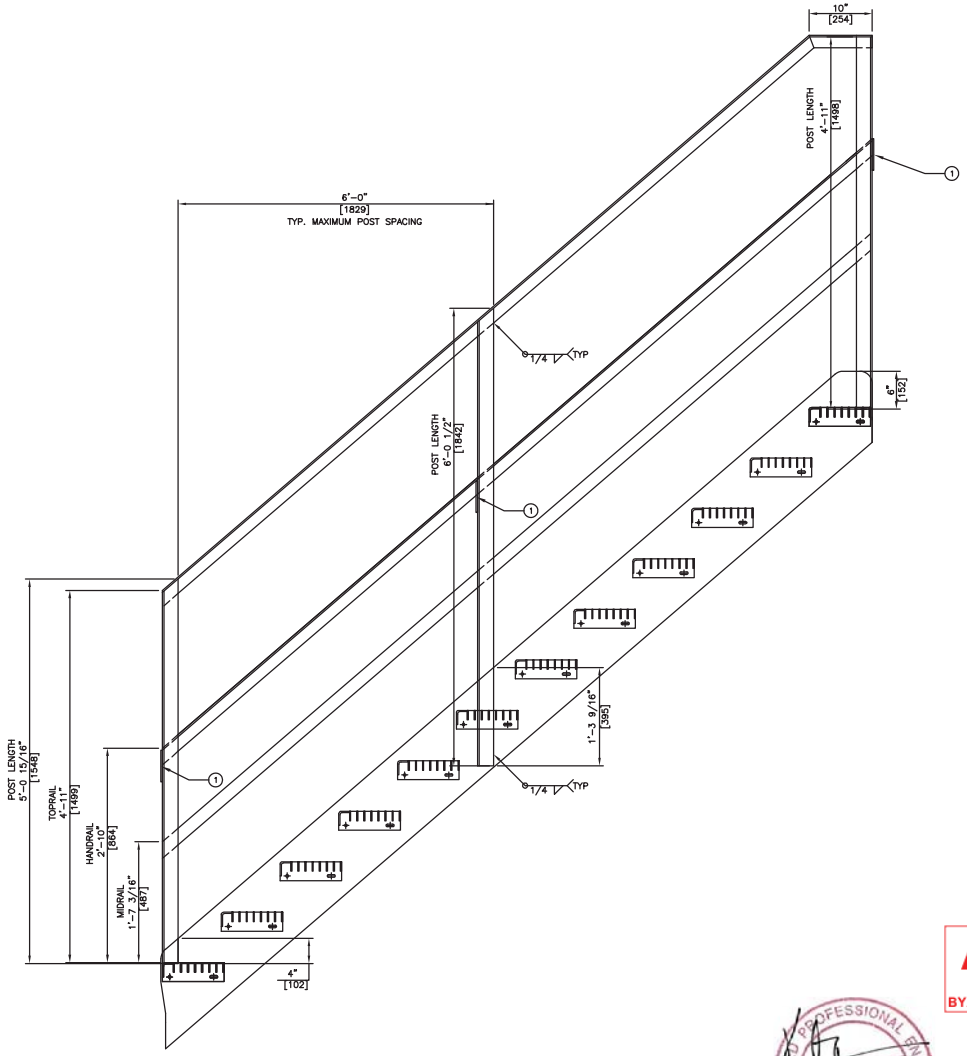

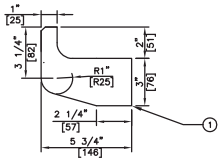

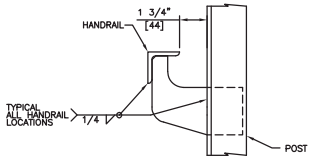

TYPICAL HANDRAIL/POST DETAIL

TYPICAL HANDRAIL DETAIL

TOPRAIL – 1/4" x 2" x 2" ANGLE
HANDRAIL – 1/4" x 2" x 2" ANGLE
MIDRAIL – 1/4" x 2" FLATBAR

POST – 1/4" x 2 1/2" x 2 1/2" ANGLE
POST SHALL BE SQUARE TO THE STAIR HOLES
1 POST AT EACH END, 2 POSTS EQUAL SPACE ON STRINGER

**HANDRAIL LOCATED ON OUTSIDE ONLY

QUANTITY OF STAIRS IS FOR DEMONSTRATION ONLY.

STAIRS ARE CAPABLE OF SUPPORTING A MOVING CONCENTRATED LOAD OF 1000LBS, AND HANDRAIL LOAD OF 200LBS IN ANY DIRECTION.

AS-BUILT
BY Inukshuk Construction Ltd. DATE 20 18/07/19

PROFESSIONAL ENGINEER
G. BROWN
LICENSEE
NTINU
10-Jan-2018

Permit Number: P471

REV.	DATE	DRWN.	APP'D.	DESCRIPTION
0	5-MAY-17	ME	KB	ISSUED FOR CONSTRUCTION
A	17-APR-17	ME	KB	ISSUED FOR APPROVAL

REVISIONS

SUB-ARC SYSTEMS INC.

CUSTOMER: AGNICO EAGLE MINES LIMITED – MELIADINE PROJECT
TITLE: STAIR HANDRAIL DETAIL
PROJECT NO.: 6515
LOCATION: RANKIN INLET, NUNAVUT
TANK NO.: TANK TAG: TK #5 & #6
SCALE: 3/4" = 1'-0"
W.O.: 17-03
DRWG. No.: 17-03-5-006
REV.: 0
DATE: 17-APR-17

APPENDIX H

Construction Summary of Industrial Site Fuel Storage and Containment Facilities

TETRA TECH

Civil Earthworks Construction Summary – Industrial Site Tank Farm

- Construction management and quality assurance performed by Agnico Eagle Construction
- Primary civil construction contractor was MTKSL (2017) and AEM Construction (2018)
- Subcontractors: Texel Geosol for liner installation and liner QC
- All survey conducted by Hamel Arpentage

Design Changes:

Material Substitutions

- As per RFI 6515-C-230-009_015, the following material substitutions were approved by the design engineer and implemented in the field:
    - 600 mm minus ROM outside of the tank pedestal footprints (including the perimeter berms) was replaced with 600 mm minus esker material
    - 200 mm minus transition material was eliminated from the above area
- No changes to the original design were made to the tank pedestal footprints

1. **Site Preparation (June 2017)**

- OG surveyed of tank farm footprint

2. **Under Liner Material Placement (June 9 to September 15, 2017)**

- Both the 600 mm minus waste rock (tank pedestal areas) and 600 mm minus esker (outside tank pedestals) were placed in controlled lifts and compacted with a 10-ton vibratory drum compactor
- The first lift of under liner material was placed directly on original ground.

3. **Liner System Installation (September 16 to September 17, 2017 and July 14 to July 19, 2018)**

- Textured 60 mil HDPE installed throughout, bedded above and below with 540 g/m2 geotextile.
- Liner was first placed under the tank pedestal footprints (September, 2017) and the bases of the two tanks were placed prior to winter 2017.
- After erection of the two tanks was completed in 2018, liner installation proceeded throughout the remainder of the containment area (July, 2018)
- Liner installation QA was carried out by AEM and quality control testing by Texel.

4. **Tank Erection**

- Civil earthworks within the Tank Farm area were suspended during erection of the tanks

5. **Over Liner Material Placement (September 2017 and July 21 to July 29, 2018)**

- Over liner material placement on the tank pedestals (September, 2017) and in the tank containment area (July, 2018) generally followed the design specification of placement of 30 mm minus placed on geotextile placed on HDPE.

Equipment Used for Construction:

- CAT D8 Bulldozer
- CAT D6 Bulldozer
- CAT 330L Excavator
- CAT 345B Excavator
- CAT 320 Excavator
- CAT 980 Loader
- CAT skid steers
- CAT 773 haul trucks
- CAT 740 articulated haul trucks
- CAT CS56 10-ton vibratory drum compactor
- HAMM 5-ton vibratory drum compactor

- Various small hand-pushed compactors

QA/QC Summary

1. 600 mm minus, 200 mm minus and 30 mm minus (under liner) was placed according to the Technical Specifications for Civil Earthworks Revision 3 (6515-GNS-014, June 6, 2017). Compaction efforts (under liner only) consisted of a minimum number of passes with either a 10-tonne vibratory compactor (4 passes) or a 5-tonne vibratory compactor (6 passes). Suitability for placement and compaction efforts were assessed visually and approved by AEM.
2. Particle size analysis was conducted on the 30 mm minus produced from ROM (results attached) and show that the material generally meets specification.
3. Texel Geosol was responsible for all quality control of the liner installation process.

APPENDIX I

Particle Size Summary – 30 mm minus Run of Mine

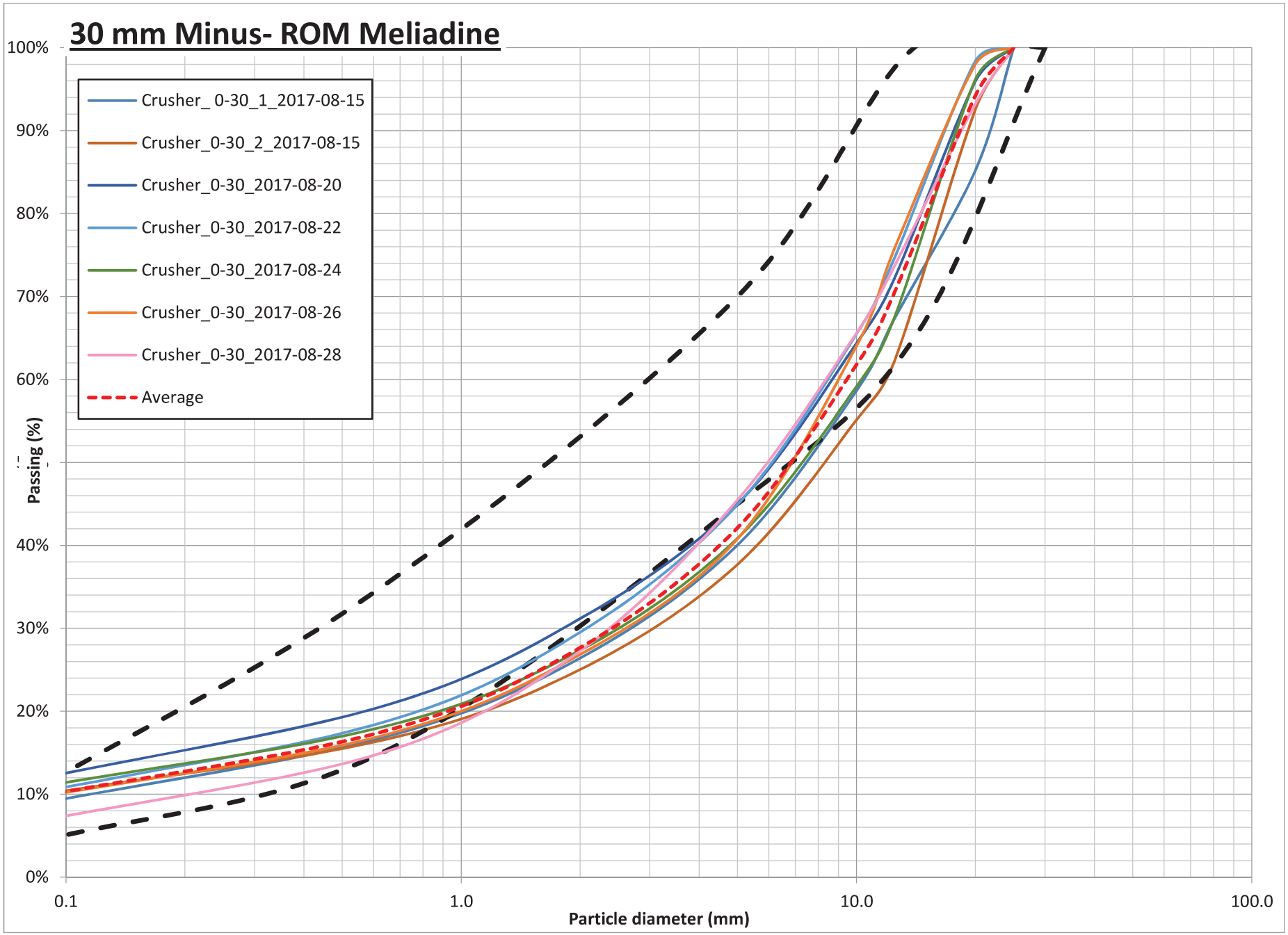
30 mm Minus- ROM Meliadine
Crusher_ 0-30_1_2017-08-15
Crusher_0-30_2_2017-08-15
Crusher_0-30_2017-08-20
Crusher_0-30_2017-08-22
Crusher_0-30_2017-08-24
Crusher_0-30_2017-08-26
Crusher_0-30_2017-08-28
Average
Passing (%)
100%
90%
80%
70%
60%
40%
30%
20%
10%
0%
0.1
1.0
10.0
100.0
Particle diameter (mm)

Table 1: Summary of Particle Size Analysis Results - 30 mm minus ROM Meliadine

No.	Sample ID	Sieve Size (mm)								Moisture Content
		25.00	20.00	12.50	10.00	5.00	2.00	0.63	0.08	
1	Crusher_ 0-30_1_2017-08-15	100.0%	85.2%	67.4%	58.6%	40.0%	26.4%	16.8%	8.6%	4.2%
2	Crusher_0-30_2_2017-08-15	100.0%	92.6%	62.3%	55.1%	37.7%	25.0%	16.5%	9.7%	2.9%
3	Crusher_0-30_2017-08-20	100.0%	95.9%	72.3%	64.4%	45.0%	31.2%	20.6%	11.6%	3.2%
4	Crusher_0-30_2017-08-24	100.0%	96.2%	67.6%	59.2%	40.9%	27.4%	18.1%	10.7%	2.2%
5	Crusher_0-30_2017-08-22	100.0%	98.4%	74.7%	65.5%	44.9%	29.5%	18.6%	10.0%	3.7%
6	Crusher_0-30_2017-08-26	100.0%	98.0%	75.9%	64.0%	40.8%	26.8%	17.0%	9.4%	2.2%
7	Crusher_0-30_2017-08-28	100.0%	93.2%	73.8%	65.6%	45.5%	27.3%	15.0%	6.5%	4.4%
Average		**100.0%**	**94.2%**	**70.6%**	**61.8%**	**42.1%**	**27.7%**	**17.5%**	**9.5%**	**3.2%**

APPENDIX J

Inspection Report – Inspection Test Plan

MTKSL	INSPECTION TEST PLAN	Page 1 of 3

PROJECT:	AGNICO EAGLE MINES (AEM) - MELIADINE GOLD PROJECT		
Contractor:	MTKSL	Contract/Job No.:	6515-C-235-009
Area/System No.:	Industrial Pad Fuel Farm	ITP No.:	6515-C-235-009_ITP_007 20170819

Contact Person:	MTKSL – Tyler Wilson			Verification Type				AEM Job Titles	
Work Area:	Industrial Pad Fuel Farm (IPFF)			H:	Hold Point	T:	Test	CC	Construction Coordinator
Subcontractor:	Texel (Liner), Hamel (Survey), AEM Field Engineering (Materials Testing)			I:	Inspection	V:	Verify Test Results	FE	Field Engineer
CWP No.:	6515-C-235-009 – Industrial Pads	EWP No.:	N/A	R:	Review Documentation	W:	Witness / Report	QA	Quality Assurance Representative

ACTIVITY DATA							VERIFICATION DATA[4]											
								Subcontractor QC			General Contractor QC			AEM				
No.	Description of Activities[1] (Describe in sequential order. Sequence must align with the execution sequence of the work to be performed.)	Functional[2] Responsibility	Characteristic (s)[3]	Verification[4] Frequency	Reference Document(s)	Acceptance Criteria	Verification[5] Document(s) (Reporting)	Type	Initials	Date	Type	Initials	Date	Type	Initials	Date	Title	Comments
1	IFCs Approved (Issued for Construction)	AEM / MTKSL	Verify all IFCs are approved and correct	Prior to Construction and ongoing	Issued IFCs	Stamped IFC Drawings and latest revisions	Drawing Log; AEM Transmittal	H			H	JC	10-20-17	R	JP	10/20/17	RE	No work to proceed without Approved IFC Drawings issued fro AEM Document Control ,Void older revisions
2	Materials Production	AEM/MTKSL	Material Acceptance	As required	Technical Specs	Passing material gradation	Sieve Analysis	N/A			H	JC	10-20-17	R/V	JP	10/20/17	RE	Sieve Analysis and moisture content testing. QC Testing by AEM.
3	Materials Assignment	AEM	Material Acceptance	Ongoing	Site Standards	Material suitability	Material Balance & Assignment Sheet	N/A			H	JC	10-20-17	I/V	JP	10/20/17	RE	Materials sources for construction materials to be dictated by AEM.
4	Survey Layout	HAMEL	Layout area of construction	As required	Issued IFC's	Conforms to IFC's.	Survey Layout Report	V			H	JC	10-20-17	R	JP	10/20/17	RE	Survey provided by AEM (Hamel)
5	Site Preparation	MTKSL	Ensure site is acceptable for placement	Once	IFCs, Site Standards, Technical Specs	Conforms to IFCs and Technical specs	Release for backfill / Stripping Report	V			R/I	JC	10-20-17	V/I	JP	10/20/17	RE	OG Surface to be surveyed prior to fill placement.
6	Placement of Material <600mm	MTKSL	Monitoring placement of materials	As required	IFCs, Site Standards, Technical Specs	Conforms to IFCs and Technical specs	Back Fill Report	V			V/R	JC	10-20-17	V/I	JP	10/20/17	RE	Lift to be released by QA. ROM under tank Pedestals. Esker elsewhere. 90% SPD
7	Placement of Material <200mm	MTKSL	Monitoring placement of materials	As required	IFCs, Site Standards, Technical Specs	Conforms to IFCs and Technical specs	Back Fill Report	V			V/R	JC	10-20-17	V/I	JP	10/20/17	RE	Lift to be released by QA. 200mm removed from interior slopes & floor. 200mm remains under pedestals. 95% SPD
8	Placement of Material <50mm – Service Pad	~~MTKSL~~ AEM	Monitoring placement of materials	As required	IFCs, Site Standards, Technical Specs	Conforms to IFCs and Technical specs	Back Fill Report	V			V/R			V/I	JP	09/6 2018	RE	Lift to be released by QA. 90% SPD.

9	Placement of Material <30mm – Under liner	MTKSL/AEM	Monitoring placement of materials	As required	IFCs, Site Standards, Technical Specs	Conforms to IFCs and Technical specs	Back Fill Report	V			V/R	JC	10-26-17	V/I	JP JP	10/20/17 09/2018	RE RE	Lift to be released by QA. — pedestals only
10	Placement of Liner	MTKSL/Texel	Monitoring placement of materials & verification	Ongoing	Manufacturers Specs, Technical Specs	Conforms to Manufacturers Specs, Install SOP, Technical Specs	Liner Installation Report	V	OB	6/23	V/R	JC	10-26-17	V/R/I	JP JP	10/20/17 09/2018	RE RE	Other ITP/QC Documents to be submitted separately. — pedestals only
11	Placement of Material <30mm – Over Liner	MKTSL/AEM	Monitoring placement of materials	As required	IFCs, Site Standards, Technical Specs	Conforms to IFCs and Technical specs	Back Fill Report	V			V/R	JC	10-26-17	V/I	JP JP	10/20/17 09/2018	RE RE	Track pack liner cover. **Note Bearing Specs for Equipment on liner cover — pedestal only
12	Placement of Sand – Under Tank	MTKSL	Monitoring placement of materials	As required	IFCs, Site Standards, Technical Specs	Conforms to IFCs and Technical specs	Back Fill Report	V			V/R			V/I	JP	10/20/17	RE	
13	As built summary	AEM/~~MTKSL~~/HAMEL	Verify construction against IFC's	Once	Issued IFC's & Approved Field Changes	Conforms to IFC's & Approved Field Changes	Survey report & cleared ECN log	H			H			R/V	JP	09/2018	RE	Survey to be completed as each material change or area
14	Walkdowns & Deficiency Correction	AEM/~~MTKSL~~	Verification	As Required	Asbuilt summary, IFCS, Field Changes	Conforms to IFC's & Approved Field Changes	Cleared Punch Log	N/A			H			R/V	JP	09/2018	RE	
15	Final acceptance and turnover	AEM/~~MTKSL~~	Acceptance of final turnover	Once	Issued IFC's, Technical Specs	Conforms to IFCs, Technical Specs, Field Changes	Final Acceptance	H			H			W	JP	09/2018	RE	

Comments: All Survey to be performed by Hamel. Material Testing to be performed by AEM.

Applicable Site Standard XXXXX-XXXXX

Applicable Technical Specification - 6515-GNS-014_R3.

ITP ISSUE APPROVALS

Contractor Construction Manager / Superintendent *(Print)*	Title	Signature	Date *(mm/dd/yy)*

Contractor Site Quality Manager / Supervisor *(Print)*	Owner Title	Signature	Date *(mm/dd/yy)*
Jennifer Pyliuk	Resident Engineer	[signature]	09/2018

AEM Quality Manager / Supervisor *(Print)*	Title	Signature	Date *(mm/dd/yy)*

ITP CLOSEOUT AND WORK ACCEPTANCE APPROVALS

Contractor Site Quality Manager / Supervisor *(Print)*	Title	Signature	Date *(mm/dd/yy)*
AEM Quality Manager / Supervisor / Designate *(Print)*	Title	Signature	Date *(mm/dd/yy)*

APPENDIX K

Inspection Report – Quality Control Final Report for Geomembrane Installation

TETRA TECH

MELIADINE INDUSTRIAL PAD FUEL FARM
AGNICO EAGLE MINES LIMITED
Meliadine, Nunavut
Texel Geosol Project No. C-17060 / C-18068

QUALITY CONTROL FINAL REPORT BY TEXEL GEOSOL INC.

Prepared for:

NUNA KIVALLIQ EARTHWORKS INC

By:

Texel GEOSOL

August, 2018

MELIADINE INDUSTRIAL PAD FUEL FARM
AGNICO EAGLE MINES LIMITED
Meliadine, Nunavut
Texel Geosol Project No. C-17060 / C-18068

QUALITY CONTROL FINAL REPORT BY TEXEL GEOSOL INC.

Prepared for:

NUNA KIVALLIQ EARTHWORKS INC
NUNA SERVICES LTD
9839-31 Avenue
Edmonton, Alberta
T6N 1C5

By:

TEXEL GEOSOL INC.
1300, 2e Rue, Parc industriel
Sainte-Marie, Québec, Canada
G6E 1G8

August, 2018

TABLE OF CONTENTS

1. INTRODUCTION 4
2. HUMAN RESOURCES 4
3. GEOMEMBRANE INSTALLATION 4
   3.1. DESCRIPTION OF THE WORK 4
   3.2. INSTALLATION PROCEDURES 5
   3.3. GEOMEMBRANE QUALITY CONTROLS 5
      3.3.1. On-site geomembrane installation 5
         3.3.1.1 Welding trial tests 5,6
         3.3.1.2 On-site non-destructive testing 6,7
         3.3.1.3 On-site destructive tests 7
   3.4. REPAIR PROCEDURES 8
   3.5. RECORD DRAWING 8
4. GEOTEXTILE QUALITY CONTROL 8
5. CERTIFICATION 9

LIST OF APPENDICES

- APPENDIX I - Quality control test results obtained on site by Texel Geosol Inc
- APPENDIX II - Field Memos and Communications
- APPENDIX III - US-EPA Classification for Types of Break
- APPENDIX IV - Record drawing

LIST OF FIGURES

FIGURE 1 - DOUBLE -TRACK GEOMEMBRANE WELD 5
FIGURE 2 - FILLET-EXTRUDED GEOMEMBRANE WELD 5
FIGURE 3 - PEEL ADHESION TEST 6
FIGURE 4 - SHEAR STRENGTH TEST 6
FIGURE 5 - AIR-PRESSURE TEST 6
FIGURE 6 - VACUUM-BOX TEST 7

1. INTRODUCTION

The following report was prepared by Texel Geosol, for Nuna Kivalliq Earthworks Inc.

This report contains a description as well as a certification of all work conducted by Texel Geosol, installer of the geosynthetics. It also contains the record drawing of the geomembrane installation for the Meliadine Industrial Pad Fuel Farm. All installation work conducted on the geosynthetics took place between September 16 and 17, 2017 and between July 14 to 19, 2018.

2. HUMAN RESOURCES

The following list identifies the key personnel involved with the physical realization of this project

TEXEL GEOSOL INC. (Geosynthetic Installer)

- Mr. François Thivierge, Construction and project Manager
- Mr. Jacques St-Gelais, Operation Manager
- Mr. Simon-Carl Marcoux, Eric Black, Site Foreman
- Mr. Michael Gilbert, Louis-Philippe Beauchamps, Field QC Inspector and technician
- Mr. Kléber Nault and Philippe Alie, Technician

NUNA KIVALLIQ EARTHWORKS INC (General Contractor - Client)

- Mr. Matt Gallant, Project Manager

AGNICO EAGLE CONSTRUCTION. (Quality Assurance)

3. GEOMEMBRANE INSTALLATION

This section includes a description of the work and the installation procedures used during the deployment of the geomembrane. Also, the construction quality control procedures are detailed in this section

3.1. Description of the work

The scope of the installation was to completely cover the Industrial pad fuel farm with a geosynthetic lining system. Texel Geosol installed approximately 5259,7 sm of 60 mil HDPE textured geomembrane. All the installation, seaming and repair procedures were conducted according to the project plans and specifications, and manufacturer's recommendations.

3.2. Installation Procedures

The geomembrane rolls were later deployed and installed by Texel Geosol as prescribed in the specifications. Panels were placed to minimize seams across the side slope and the tie-in seams. The panels were overlapped about 125 to 150 mm, allowing adequate double fusion welding and leaving enough material to perform peel and shear tests on seam samples (see section 3.3.2.1 for a description of these tests).

All seams between panels were made using an automated polymer fusion process, the fusion being obtained through a double hot wedge. These parallel welds create an air channel which allow air-pressure testing of the continuity of the seam (see Fig. 1).

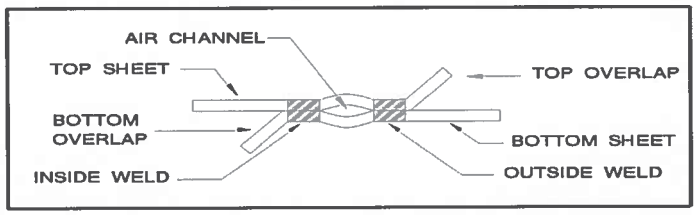

***Figure 1* - Double -Track Geomembrane Weld**

In restrictive areas where this process could not be adequately applied, such as corners, repair work and pipe penetrations, a manual extrusion fillet welding was employed (see Fig. 2).

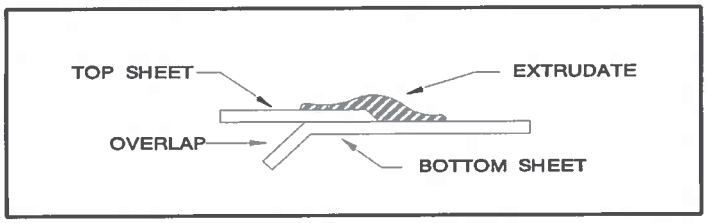

***Figure 2* - Fillet-Extruded Geomembrane Weld**

3.3. Geomembrane quality control

3.3.1. On-site geomembrane installation

3.3.1.1 Welding trial tests

Trial tests were performed prior to any on-site seaming in order to quantify the calibration of the welding equipment. On each sample, four peel tests and one shear tests were performed. A peel adhesion test is conducted by submitting a one inch-wide seam specimen to a tensile effort on a calibrated, portable tensiometer and trying to "peel", or open the seam (see Fig. 3). A shear strength test is similar, but the tension is applied in the plane of the seam (see Fig. 4). The peel test gives an indication of the quality of the seam while the shear test demonstrates the actual behavior of the seam in service.

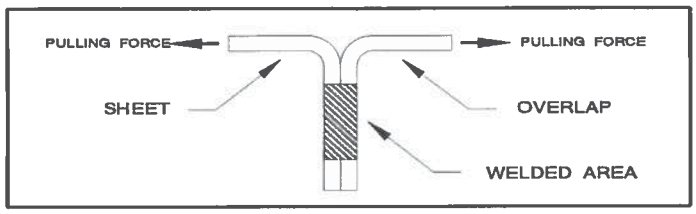

Figure 3 **- Peel Adhesion Test**

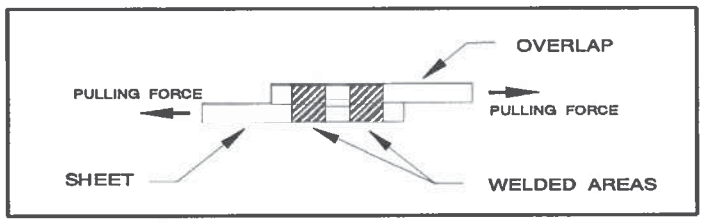

Figure 4 **- Shear Strength Test**

For each trial test, the QC Inspector recorded the date, time, ambient and operating temperatures, equipment number, speed setting, operator's initials, peel and shear values and corresponding type of break. The only type of break acceptable is designated as "FTB", as per the US-EPA classification for types of breaks, available in appendix III. The seams were made only after a satisfactory trial test had been obtained. All the results of these tests are also included in appendix I.

3.3.1.2 On-site non-destructive testing

The continuity of all seams (100%) was verified by non-destructive methods. These methods include the air-pressure test and the vacuum-box test. Any seam that failed one of these tests was rebuilt or repaired until a satisfactory result was obtained. All the results of these tests are included in Appendix I of this report.

a) Air-Pressure Testing

Air-pressure testing was employed as the primary test method. This non-destructive test method consists of injecting air at a predetermined pressure in the center air channel of fusion-welded seams (see Fig. 5). If the seam is continuous there will be very little or no drop of pressure. If a leak is present within the area under pressure, it is located and repaired. This type of non-destructive test is faster than the vacuum-box test, less observer-dependent and represents a supplementary mechanical resistance test since the geomembrane sheets are pulled away from each other by the air pressure in the channel.

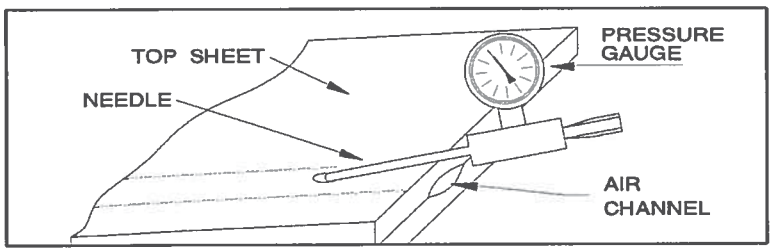

Figure 5 **- Air-Pressure Test**

b) Vacuum-box test

Wherever the air-pressure test could not be used, the vacuum-box test was employed. In this test, a film of soapy water is sprinkled over the area to be tested. A box fitted with a transparent upper cover and a neoprene lower rim is placed over that same area and connected to a vacuum pump; a negative pressure of 5 psi is then applied (see Fig. 6). If there is a puncture or discontinuous seam within this area, bubbles will appear and be detected by the observer.

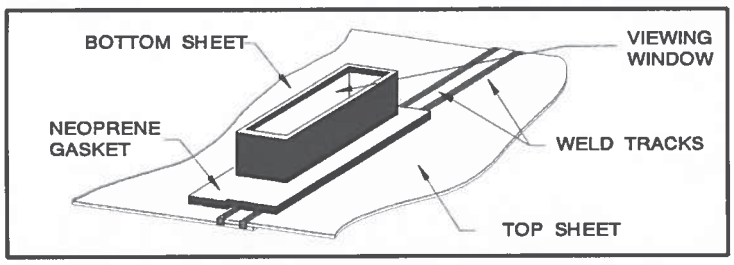

Figure 6 **- Vacuum-Box Test**

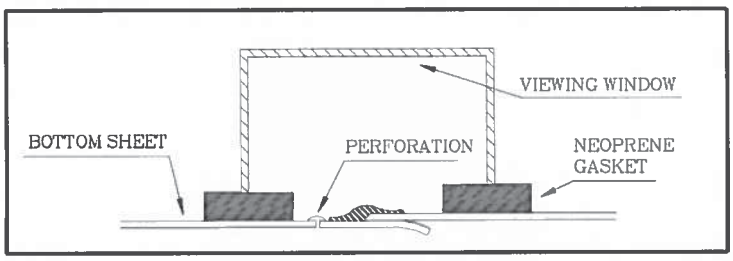

Figure 7 **- Vacuum-Box Test**

3.3.1.3 On-site destructive tests

Finally, a destructive testing program was applied, where seam samples taken from the installed geomembrane were tested for peel adhesion and shear strength on a calibrated, portable tensiometer. On each sample, four peel tests and one shear tests were performed. All the results from these tests are included in Appendix I of this report.

3.4. Repair Procedures

All materials were visually inspected for blemishes, punctures and other defects or damages that may have occurred during transport or panel placement. Any defect or damage was repaired as per the procedures described in this section.

Demobilization was not authorized until Texel Geosol, Nuna Kivalliq Earthworks Inc and Agnico Eagle Construction completed a last visual inspection of the installation work. Any defect revealed by any step of the Quality Control Program was repaired and verified according to the prescribed procedures:

- All pockmarks, pinholes, T-seams, etc., smaller than the tip of the extruder were covered with an extrusion bead;
- All punctures, holes, tears, etc., wider than the tip of the extruder were repaired with extrusion-welded patches;
- Any seam revealed as defective by the CQC or CQA Programs was entirely rebuilt through a fusion and/or extrusion seaming process.

Prior to any fillet extrusion welding, the geomembrane was buffed to insure better adhesion of the extruded material. All repairs were visually inspected and verified by a non-destructive testing method, as described in section 3.3.2.2.

3.5. Record Drawing

The record drawing of the geomembrane installation, showing all panels, panel identification, pipe penetrations, repairs and destructive test locations, is included in Appendix IV of this report.

4. GEOTEXTILE QUALITY CONTROL

Approximately 10 519,4 sm of non-woven geotextile was installed by Texel Geosol according to the project plans and specifications. The geotextile panels were overlapped approximately 100 to 150 mm and thermally bonding (hot air or wedge) or sewing in order to ensure the continuity of the cushion layer.

Any holes or tears in the geotextile were repaired according to the project specifications. All geotextile materials were installed by Texel Geosol.

5. CERTIFICATION

Texel Geosol certifies having installed all geosynthetic materials according to the project plans and specifications provided by the consultant Tetra Tech, for Nuna Kivalliq Earthworks Inc. All installation work conducted by Texel Geosol meets or exceeds the standards of the geosynthetic industry.

François Thivierge, P. Eng., MBA
Construction Director
TEXEL GEOSOL INC.

08/07/18
Date
(mm-dd-yy)

APPENDIX I

QUALITY CONTROL PROCEDURES CONDUCTED ON SITE BY TEXEL GEOSOL INC.

Texel GEOSOL

Fusion Trial Tests
Calibration par Fusion

Project Name / Nom de Projet: **Meliadine Industrial Pad Fuel Farm**

Project No. / No. de Projet: **C-17060 / C-18068**

QC Inspector / Inspecteur CQ: **Louis-Philippe Beauchamps**

Trial Test No. No. de Calibration	Date (mm/dd/yy)	Time Heure	Ambient Temp. Temp. Ambiante	Equipment No. No. Équipement	Equipment Temp. Temp. Équipement	Equipment Speed Vitesse Équipement	Peel Resistance Résistance Pelage "A" (ppi)	Peel Type of Break Type de Brisure	Peel Resistance Résistance Pelage "B" (ppi)	Peel Type of Break Type de Brisure	Shear Resistance Résist. Cisaillement (ppi)	Shear Type of Break Type de Brisure	Tech.-Welder Soudeur	Tensiometer No. No. Tensiomètre
September 2017														
F-1	09-16-17	13:50	5 °C	MD-007	860 °F	450	144	SE1	150	SE1	191	BRK	K.N	T-9709
"	"	"	"	"	"	"	121	SE1	150	SE1	N/A	N/A	"	"
"	"	"	"	"	"	"	132	SE1	149	SE1	N/A	N/A	"	"
"	"	"	"	"	"	"	134	SE1	155	SE1	N/A	N/A	"	"
F-2	09-17-17	07:00	2 °C	MD-007	860 °F	450	151	SE1	160	SE1	220	BRK	K.N	T-9709
"	"	"	"	"	"	"	147	SE1	153	SE1	N/A	N/A	"	"
"	"	"	"	"	"	"	148	SE1	165	SE1	N/A	N/A	"	"
"	"	"	"	"	"	"	147	SE1	159	SE1	N/A	N/A	"	"
July 2018														
F-1	07-14-18	12:20	18 °C	M-9856	750 °F	675	138	SE1	141	SE1	168	BRK	P.A	T-9601
"	"	"	"	"	"	"	173	SE1	168	SE1	173	BRK	"	"
"	"	"	"	"	"	"	154	SE1	129	SE1	N/A	N/A	"	"
"	"	"	"	"	"	"	144	SE1	137	SE1	N/A	N/A	"	"
F-2	07-16-18	07:20	12 °C	M-9856	750 °F	700	141	SE1	94	SE1	181	BRK	P.A	T-9601
"	"	"	"	"	"	"	127	SE1	113	SE1	180	BRK	"	"
"	"	"	"	"	"	"	126	SE1	111	SE1	N/A	N/A	"	"
"	"	"	"	"	"	"	129	SE1	119	SE1	N/A	N/A	"	"
F-3	07-17-18	09:45	14 °C	M-9856	750 °F	750	136	SE1	103	SE1	177	BRK	P.A	T-9601
"	"	"	"	"	"	"	126	SE1	109	SE1	176	BRK	"	"
"	"	"	"	"	"	"	131	SE1	127	SE1	N/A	N/A	"	"
"	"	"	"	"	"	"	138	SE1	131	SE1	N/A	N/A	"	"

Texel GEOSOL

Fusion Trial Tests
Calibration par Fusion

Project Name / Nom de Projet: **Meliadine Industrial Pad Fuel Farm**

Project No. / No. de Projet: **C-17060 / C-18068**

QC Inspector / Inspecteur CQ: **Louis-Philippe Beauchamps**

Trial Test No. No. de Calibration	Date (mm/dd/yy)	Time Heure	Ambient Temp. Temp. Ambiante	Equipment No. No. Équipement	Equipment Temp. Temp. Équipement	Equipment Speed Vitesse Équipement	Peel Resistance Résistance Pelage "A" (ppi)	Peel Type of Break Type de Brisure	Peel Resistance Résistance Pelage "B" (ppi)	Peel Type of Break Type de Brisure	Shear Resistance Résist. Cisaillement (ppi)	Shear Type of Break Type de Brisure	Tech.-Welder Soudeur	Tensiometer No. No. Tensiomètre
F-4	07-19-18	07:50	13 °C	M-9856	750 °F	700	130	SE1	107	SE1	178	BRK	P.A	T-9601
"	"	"	"	"	"	"	134	SE1	109	SE1	180	BRK	"	"
"	"	"	"	"	"	"	122	SE1	114	SE1	N/A	N/A	"	"
"	"	"	"	"	"	"	128	SE1	131	SE1	N/A	N/A	"	"

Texel GEOSOL

Extrusion Trial Tests
Calibration par Extrusion

Project Name / Nom de Projet: **Meliadine Industrial Pad Fuel Farm**

Project No. / No. de Projet: **C-17060 / C-18068**

QC Inspector / Inspecteur CQ: **Louis-Philippe Beauchamps**

Trial Test No. No. de Calibration	Date (mm/dd/yy)	Time Heure	Ambient Temp. Temp. Ambiante	Equipment No. No. Équipement	Equipment Temp. Temp. Équipement	Pre-Heat Temp. Temp. Pré-Chauf.	Peel Resistance Résistance Pelage (ppi)	Peel Type of Break Type de Brisure	Shear Resistance Résist. Cisaillement (ppi)	Shear Type of Break Type de Brisure	Tech.-Welder Soudeur	Tensiometer No. No. Tensiomètre
September 2017												
E-1	09-17-17	07:00	2 °C	EX-E	260 °C	260 °C	121	SE3	N/A	N/A	S.M	T-9709
"	"	"	"	"	"	"	127	SE3	N/A	N/A	"	"
"	"	"	"	"	"	"	128	SE3	N/A	N/A	"	"
"	"	"	"	"	"	"	78	Ad	N/A	N/A	"	"
E-2	09-17-17	08:00	2 °C	EX-E	260 °C	260 °C	146	SE3	193	BRK	S.M	T-9709
"	"	"	"	"	"	"	133	SE3	N/A	N/A	"	"
"	"	"	"	"	"	"	138	SE3	N/A	N/A	"	"
"	"	"	"	"	"	"	171	SE3	N/A	N/A	"	"
July 2018												
E-1	07-17-18	12:50	15 °C	EX-38	250 °C	250 °C	124	SE3	180	BRK	E.B	T-9601
"	"	"	"	"	"	"	131	SE3	176	BRK	"	"
"	"	"	"	"	"	"	121	SE3	N/A	N/A	"	"
"	"	"	"	"	"	"	134	SE3	N/A	N/A	"	"
E-2	07-18-18	07:45	13 °C	EX-38	250 °C	245 °C	119	SE3	182	BRK	E.B	T-9601
"	"	"	"	"	"	"	142	SE3	182	BRK	"	"
"	"	"	"	"	"	"	130	SE3	N/A	N/A	"	"
"	"	"	"	"	"	"	129	SE3	N/A	N/A	"	"

Texel GEOSOL

Extrusion Trial Tests
Calibration par Extrusion

Project Name / Nom de Projet: **Meliadine Industrial Pad Fuel Farm**

Project No. / No. de Projet: **C-17060 / C-18068**

QC Inspector / Inspecteur CQ: **Louis-Philippe Beauchamps**

Trial Test No. No. de Calibration	Date (mm/dd/yy)	Time Heure	Ambient Temp. Temp. Ambiante	Equipment No. No. Équipement	Equipment Temp. Temp. Équipement	Pre-Heat Temp. Temp. Pré-Chauf.	Peel Resistance Résistance Pelage (ppi)	Peel Type of Break Type de Brisure	Shear Resistance Résist. Cisaillement (ppi)	Shear Type of Break Type de Brisure	Tech.-Welder Soudeur	Tensiometer No. No. Tensiomètre
E-3	07-19-18	07:45	8 °C	EX-38	250 °C	245 °C	128	SE3	189	BRK	E.B	T-9601
"	"	"	"	"	"	"	124	SE3	186	BRK	"	"
"	"	"	"	"	"	"	141	SE3	N/A	N/A	"	"
"	"	"	"	"	"	"	141	SE3	N/A	N/A	"	"

Texel GEOSOL

Seaming Procedures
Procédures de Soudures

Project Name / Nom de Projet: **Meliadine Industrial Pad Fuel Farm**

QC Inspector / Inspecteur CQ: **Louis-Philippe Beauchamps**

Project No. / No. de Projet: **C-17060 / C-18068**

Seaming Procedures / Procédures de Soudures						Non-Destructive Testing / Essai Non-Destructif							
Seam No. No. de Soudure	Date of Seaming Date de Soudure (mm/dd/yy)	Time of Seaming Heure de Soudure	Seam Length Longueur Soudure (m)	Trial Test No. No. Calibration	Technician-Welder Soudeur	Test Date Date de l'essai (mm/dd/yy)	Time Heure	Air-Pressure Pressurisation	Vacuum Box Boîte à Vide	Starting Pressure Pression Départ (psi)	Ending Pressure Pression Fin (psi)	Testing Details/Location Détails de l'essai/Localisation	Approved (Yes/No) Approuvé (Oui/Non)
September 2017													
1-2 (E4-E8)	09-16-17	13:37	33,1	F-1	K.N	09-16-17	13:55	X	-	32	32	Full seam	Y
2-3 (E3-E4)	09-16-17	13:54	33,2	F-1	K.N	09-16-17	14:20	X	-	31	31	Full seam	Y
3-4 (E2-E3)	09-16-17	14:17	33	F-1	K.N	09-16-17	14:27	X	-	30	29	Start at South (SEOS) 0m to 6m	Y
"	"	"	"	"	"	09-16-17	14:40	X	-	31	31	6m to 33m	Y
4-5 (E1-E2)	09-16-17	15:35	32	F-1	K.N	09-16-17	15:56	X	-	31	31	Full seam	Y
6-7 (E6-E7)	09-17-17	10:00	18,4	F-2	K.N	09-17-17	10:11	X	-	31	30	Full seam	Y
7-8 (E5-E6)	09-17-17	10:06	17,8	F-2	K.N	09-17-17	10:27	X	-	32	32	Full seam	Y
July 2018													
1-2	07-14-18	17:02	8,5	F-1	P.A	07-14-18	17:15	X	-	29	28	Full seam	Y
1-3	07-14-18	17:20	5,9	F-1	P.A	07-14-18	17:28	X	-	31	31	Full seam	Y
2-3	07-14-18	17:20	6,65	F-1	P.A	07-14-18	17:28	X	-	31	31	Full seam	Y
3-4	07-14-18	17:33	18	F-1	P.A	07-16-18	07:20	X	-	29	28	Full seam	Y

Texel GEOSOL

Seaming Procedures
Procédures de Soudures

Project Name / Nom de Projet: Meliadine Industrial Pad Fuel Farm

QC Inspector / Inspecteur CQ: Louis-Philippe Beauchamps

Project No. / No. de Projet: C-17060 / C-18068

Seaming Procedures / Procédures de Soudures						Non-Destructive Testing / Essai Non-Destructif							
Seam No. No. de Soudure	Date of Seaming Date de Soudure (mm/dd/yy)	Time of Seaming Heure de Soudure	Seam Length Longueur Soudure (m)	Trial Test No. No. Calibration	Technician-Welder Soudeur	Test Date Date de l'essai (mm/dd/yy)	Time Heure	Air-Pressure Pressurisation	Vacuum Box Boîte à Vide	Starting Pressure Pression Départ (psi)	Ending Pressure Pression Fin (psi)	Testing Details/Location Détails de l'essai/Localisation	Approved (Yes/No) Approuvé (Oui/Non)
4-5	07-16-18	07:47	18,5	F-2	P.A	07-16-18	07:55	X	-	31	31	Full seam	Y
5-6	07-16-18	07:56	18,6	F-2	P.A	07-16-18	08:10	X	-	31	31	Full seam	Y
6-7	07-16-18	08:11	18,5	F-2	P.A	07-16-18	08:23	X	-	31	31	Full seam	Y
7-8	07-16-18	08:35	19,6	F-2	P.A	07-16-18	08:45	X	-	30	30	Full seam	Y
8-9	07-16-18	08:55	20,3	F-2	P.A	07-16-18	09:02	X	-	31,5	31	Full seam	Y
9-10	07-16-18	09:05	20,4	F-2	P.A	07-16-18	09:15	X	-	30	30	Start at North (NEOS) 0m to 6,9m	Y
"	"	"	"	"	"	07-16-18	09:45	X	-	31	30	6,9m to 20,4m	Y
8-11	07-16-18	09:53	0,6	F-2	P.A	07-16-18	10:06	X	-	29	29	Full seam	Y
9-11	07-16-18	09:53	6,65	F-2	P.A	07-16-18	10:04	X	-	31	30	Full seam	Y
10-11	07-16-18	09:53	6,1	F-2	P.A	07-16-18	10:04	X	-	31	30	Full seam	Y
11-12	07-16-18	10:05	14,3	F-2	P.A	07-16-18	10:17	X	-	28,5	28,5	Full seam	Y
12-13	07-16-18	10:12	14,5	F-2	P.A	07-16-18	10:22	X	-	31	30	Full seam	Y
13-14	07-16-18	10:30	14,7	F-2	P.A	07-16-18	10:44	X	-	31	31	Full seam	Y

Texel GEOSOL

Seaming Procedures
Procédures de Soudures

Project Name / Nom de Projet: Meliadine Industrial Pad Fuel Farm

QC Inspector / Inspecteur CQ: Louis-Philippe Beauchamps

Project No. / No. de Projet: C-17060 / C-18068

Seaming Procedures / Procédures de Soudures						Non-Destructive Testing / Essai Non-Destructif							
Seam No. No. de Soudure	Date of Seaming Date de Soudure (mm/dd/yy)	Time of Seaming Heure de Soudure	Seam Length Longueur Soudure (m)	Trial Test No. No. Calibration	Technician-Welder Soudeur	Test Date Date de l'essai (mm/dd/yy)	Time Heure	Air-Pressure Pressurisation	Vacuum Box Boîte à Vide	Starting Pressure Pression Départ (psi)	Ending Pressure Pression Fin (psi)	Testing Details/Location Détails de l'essai/Localisation	Approved (Yes/No) Approuvé (Oui/Non)
14-15	07-16-18	10:38	14,8	F-2	P.A	07-17-18	09:37	X	-	32	31	Full seam	Y
16-17	07-16-18	10:53	6,65	F-2	P.A	07-17-18	09:44	X	-	31	31	Full seam	Y
15-16	07-16-18	10:53	15,5	F-2	P.A	07-17-18	09:44	X	-	31	31	Full seam	Y
15-17	07-16-18	11:00	2,3	F-2	P.A	07-17-18	09:50	X	-	29	29	Full seam	Y
E1-17	07-17-18	10:05	6,65	F-3	P.A	07-17-18	10:07	X	-	31	30	Full seam	Y
E1-15	07-17-18	10:10	4,35	F-3	P.A	07-17-18	10:25	X	-	31	29	Full seam	Y
E1-14	07-17-18	10:10	6,65	F-3	P.A	07-17-18	10:25	X	-	31	29	Full seam	Y
E1-13	07-17-18	10:10	6,65	F-3	P.A	07-17-18	10:25	X	-	31	29	Full seam	Y
E1-12	07-17-18	10:10	6,65	F-3	P.A	07-17-18	10:25	X	-	31	29	Full seam	Y
E1-11	07-17-18	10:10	6,65	F-3	P.A	07-17-18	10:25	X	-	31	29	Full seam	Y
16-18	07-17-18	10:26	21,7	F-3	P.A	07-17-18	10:40	X	-	32	32	Full seam	Y
19-20	07-17-18	10:53	17,9	F-3	P.A	07-17-18	11:02	X	-	30	29	Full seam	Y
20-21	07-17-18	11:00	18,1	F-3	P.A	07-17-18	11:09	X	-	29,5	29	Full seam	Y

Texel GEOSOL

Seaming Procedures
Procédures de Soudures

Project Name / Nom de Projet: Meliadine Industrial Pad Fuel Farm

QC Inspector / Inspecteur CQ: Louis-Philippe Beauchamps

Project No. / No. de Projet: C-17060 / C-18068

Seaming Procedures / Procédures de Soudures						Non-Destructive Testing / Essai Non-Destructif							
Seam No. No. de Soudure	Date of Seaming Date de Soudure (mm/dd/yy)	Time of Seaming Heure de Soudure	Seam Length Longueur Soudure (m)	Trial Test No. No. Calibration	Technician-Welder Soudeur	Test Date Date de l'essai (mm/dd/yy)	Time Heure	Air-Pressure Pressurisation	Vacuum Box Boîte à Vide	Starting Pressure Pression Départ (psi)	Ending Pressure Pression Fin (psi)	Testing Details/Location Détails de l'essai/Localisation	Approved (Yes/No) Approuvé (Oui/Non)
21-22	07-17-18	11:13	17,6	F-3	P.A	07-17-18	11:20	X	-	31	29	Full seam	Y
22-23	07-17-18	11:27	17,7	F-3	P.A	07-17-18	13:07	X	-	31	31	Full seam	Y
18-19	07-17-18	11:50	6,65	F-3	P.A	07-17-18	11:56	X	-	30	30	Full seam	Y
E7-23	07-17-18	12:57	17,2	F-3	P.A	07-17-18	13:12	X	-	31	29	Full seam	Y
23-24	07-17-18	13:27	35,4	F-3	P.A	07-17-18	14:10	X	-	31	31	Full seam	Y
E8-24	07-17-18	14:07	33.4	F-3	P.A	07-17-18	14:24	X	-	30	28,5	Full seam	Y
24-25	07-17-18	14:29	46,9	F-3	P.A	07-17-18	15:50	X	-	32	32	Full seam	Y
24-26	07-17-18	14:56	27,1	F-3	P.A	07-17-18	16:10	X	-	30	28	Full seam	Y
E5-19	07-17-18	16:05	2,6	F-3	P.A	07-17-18	16:20	X	-	31	29	Full seam	Y
E5-18	07-17-18	16:05	6,65	F-3	P.A	07-17-18	16:20	X	-	31	29	Full seam	Y
E5-16	07-17-18	16:05	6,65	F-3	P.A	07-17-18	16:20	X	-	31	29	Full seam	Y
E5-17	07-17-18	16:05	2,3	F-3	P.A	07-17-18	16:20	X	-	31	29	Full seam	Y
E5-20	07-17-18	16:13	6,65	F-3	P.A	07-17-18	16:26	X	-	31	30	Full seam	Y

Texel GEOSOL

Seaming Procedures
Procédures de Soudures

Project Name / Nom de Projet: Meliadine Industrial Pad Fuel Farm

QC Inspector / Inspecteur CQ: Louis-Philippe Beauchamps

Project No. / No. de Projet: C-17060 / C-18068

Seaming Procedures / Procédures de Soudures						Non-Destructive Testing / Essai Non-Destructif							
Seam No. No. de Soudure	Date of Seaming Date de Soudure (mm/dd/yy)	Time of Seaming Heure de Soudure	Seam Length Longueur Soudure (m)	Trial Test No. No. Calibration	Technician-Welder Soudeur	Test Date Date de l'essai (mm/dd/yy)	Time Heure	Air-Pressure Pressurisation	Vacuum Box Boîte à Vide	Starting Pressure Pression Départ (psi)	Ending Pressure Pression Fin (psi)	Testing Details/Location Détails de l'essai/Localisation	Approved (Yes/No) Approuvé (Oui/Non)
E6-21	07-17-18	16:13	6,65	F-3	P.A	07-17-18	16:26	X	-	31	30	Full seam	Y
E7-22	07-17-18	16:13	6,65	F-3	P.A	07-17-18	16:26	X	-	31	30	Full seam	Y
E8-23	07-17-18	16:27	6,65	F-3	P.A	07-17-18	16:40	X	-	30	29	Full seam	Y
E4-E7	07-17-18	16:27	6,65	F-3	P.A	07-17-18	16:40	X	-	30	29	Full seam	Y
E3-E6	07-17-18	16:27	6,65	F-3	P.A	07-17-18	16:40	X	-	30	29	Full seam	Y
E2-E5	07-17-18	16:27	6,65	F-3	P.A	07-17-18	16:40	X	-	30	29	Full seam	Y
25-26	07-17-18	16:45	6,65	F-3	P.A	07-17-18	16:50	X	-	31	30	Start at int. 24-25-26 0m at 1m	Y
"	"	"	"	"	"	07-18-18	AM	-	X	-	-	1m at 3,3m	Y
"	"	"	"	"	"	07-17-18	16:55	X	-	30	30	3,3m at 6,65m	Y
3-24	07-17-18	17:00	8,8	F-3	P.A	07-17-18	17:13	X	-	31	30	Full seam	Y
1-24	07-17-18	17:00	0,8	F-3	P.A	07-17-18	17:13	X	-	31	30	Full seam	Y
1-26	07-17-18	17:00	6,65	F-3	P.A	07-17-18	17:13	X	-	31	30	Full seam	Y
E1-8	07-17-18	17:20	6,5	F-3	P.A	07-18-18	08:05	X	-	29	29	Full seam	Y

Texel GEOSOL

Seaming Procedures
Procédures de Soudures

Project Name / Nom de Projet: Meliadine Industrial Pad Fuel Farm

QC Inspector / Inspecteur CQ: Louis-Philippe Beauchamps

Project No. / No. de Projet: C-17060 / C-18068

Seaming Procedures / Procédures de Soudures						Non-Destructive Testing / Essai Non-Destructif							
Seam No. No. de Soudure	Date of Seaming Date de Soudure (mm/dd/yy)	Time of Seaming Heure de Soudure	Seam Length Longueur Soudure (m)	Trial Test No. No. Calibration	Technician-Welder Soudeur	Test Date Date de l'essai (mm/dd/yy)	Time Heure	Air-Pressure Pressurisation	Vacuum Box Boîte à Vide	Starting Pressure Pression Départ (psi)	Ending Pressure Pression Fin (psi)	Testing Details/Location Détails de l'essai/Localisation	Approved (Yes/No) Approuvé (Oui/Non)
E1-7	07-17-18	17:20	0,6	F-3	P.A	07-18-18	08:05	X	-	29	29	Full seam	Y
E2-7	07-17-18	17:25	6,3	F-3	P.A	07-18-18	08:10	X	-	30	29	Full seam	Y
E2-6	07-17-18	17:25	0,6	F-3	P.A	07-18-18	08:10	X	-	30	29	Full seam	Y
E3-6	07-17-18	17:25	6,2	F-3	P.A	07-18-18	08:10	X	-	30	29	Full seam	Y
E3-5	07-17-18	17:30	0,7	F-3	P.A	07-18-18	08:14	X	-	30	29	Full seam	Y
E4-5	07-17-18	17:30	6	F-3	P.A	07-18-18	08:14	X	-	30	29	Start at int. E3-5-6 0m at 1,9m	Y
"	"	"	"	"	"	07-18-18	08:14	X	-	30	29	1,9m at 6m	Y
E4-4	07-17-18	17:30	0,6	F-3	P.A	07-18-18	08:14	X	-	30	29	Full seam	Y
E8-4	07-17-18	17:30	6	F-3	P.A	07-18-18	08:14	X	-	30	29	Full seam	Y
E8-3	07-17-18	17:30	0,6	F-3	P.A	07-18-18	08:14	X	-	30	29	Full seam	Y
18-27	07-19-18	07:40	15,2	F-4	P.A	07-19-18	07:50	X	-	31	30	Full seam	Y
27-28	07-19-18	07:50	15,7	F-4	P.A	07-19-18	08:01	X	-	32	31	Full seam	Y
28-29	07-19-18	07:55	15,8	F-4	P.A	07-19-18	08:05	X	-	30	30	Full seam	Y

Texel GEOSOL

Seaming Procedures
Procédures de Soudures

Project Name / Nom de Projet: **Meliadine Industrial Pad Fuel Farm**

QC Inspector / Inspecteur CQ: **Louis-Philippe Beauchamps**

Project No. / No. de Projet: **C-17060 / C-18068**

Seaming Procedures / Procédures de Soudures						Non-Destructive Testing / Essai Non-Destructif							
Seam No. No. de Soudure	Date of Seaming Date de Soudure (mm/dd/yy)	Time of Seaming Heure de Soudure	Seam Length Longueur Soudure (m)	Trial Test No. No. Calibration	Technician-Welder Soudeur	Test Date Date de l'essai (mm/dd/yy)	Time Heure	Air-Pressure Pressurisation	Vacuum Box Boîte à Vide	Starting Pressure Pression Départ (psi)	Ending Pressure Pression Fin (psi)	Testing Details/Location Détails de l'essai/Localisation	Approved (Yes/No) Approuvé (Oui/Non)
19-27	07-19-18	08:13	6,65	F-4	P.A	07-19-18	08:20	X	-	30	29	Full seam	Y
19-28	07-19-18	08:13	6,65	F-4	P.A	07-19-18	08:20	X	-	30	29	Full seam	Y
19-29	07-19-18	08:13	6,65	F-4	P.A	07-19-18	08:20	X	-	30	29	Full seam	Y

Texel GEOSOL

Destructive Testing
Essai Destructif

Project Name / Nom de Projet: **Meliadine Industrial Pad Fuel Farm**

Project No. / No. de Projet: **C-17060 / C-18068**

QC Inspector / Inspecteur CQ: **Louis-Philippe Beauchamps**

Destructive Test No. No. Essai Destructif	Seam No. No. de Soudure	Date (mm/dd/yy)	Sample Location Localisation de l'échantillon	Peel Resistance Résistance Pelage (ppi)	Peel Type of Break Type de Brisure	Peel Resistance Résistance Pelage (ppi)	Peel Type of Break Type de Brisure	Shear Resistance Résist. Cisaillement (ppi)	Shear Type of Break Type de Brisure	Date Repaired Date Réparée (mm/dd/yy)	Date Repair Verified Date Réparée Vérifiée (mm/dd/yy)	Lab. Testing (P/F) Lab. Indép. (A/R)	Tensiometer No. No. Tensiomètre
September 2017													
DT-1	4-5	09-17-17	At 5,5m from SEOS	155	SE1	140	SE1	210	BRK	09-17-17	09-17-17	N/A	T-9709
"	"	"	"	164	SE1	129	SE1	N/A	N/A	"	"	"	"
"	"	"	"	140	SE1	140	SE1	N/A	N/A	"	"	"	"
"	"	"	"	168	SE1	138	SE1	N/A	N/A	"	"	"	"
July 2018													
DT-1	12-13	07-16-18	WEOS (tie-end waste)	139	SE1	124	SE1	178	BRK	N/A	N/A	N/A	T-9601
"	"	"	"	123	SE1	126	SE1	N/A	N/A	"	"	"	"
"	"	"	"	118	SE1	137	SE1	N/A	N/A	"	"	"	"
"	"	"	"	130	SE1	134	SE1	N/A	N/A	"	"	"	"
DT-2	21-22	07-17-18	NEOS (tie-end waste)	121	SE1	131	SE1	183	BRK	N/A	N/A	N/A	T-9601
"	"	"	"	121	SE1	127	SE1	N/A	N/A	"	"	"	"
"	"	"	"	130	SE1	127	SE1	N/A	N/A	"	"	"	"
"	"	"	"	119	SE1	137	SE1	N/A	N/A	"	"	"	"
DT-3	24-25	07-17-18	At 0,1m of int. 24-25-26	126	SE1	126	SE1	178	BRK	07-18-18	07-18-18	N/A	T-9601
"	"	"	"	131	SE1	125	SE1	N/A	N/A	"	"	"	"
"	"	"	"	130	SE1	118	SE1	N/A	N/A	"	"	"	"
"	"	"	"	127	SE1	117	SE1	N/A	N/A	"	"	"	"

Texel GEOSOL

Repair Report
Rapport de Réparation

Project Name / Nom de Projet: **Meliadine Industrial Pad Fuel Farm**

Project No. / No. de Projet: **C-17060 / C-18068**

QC Inspector / Inspecteur CQ: **Louis-Philippe Beauchamps**

Repair No. No. Réparation	Type & Dimensions Type et Dimensions			Location of Repair Localisation de la Réparation				Date Repaired Date Réparée (mm/dd/yy)	Date Repair Verified Date Réparée Vérifiée (mm/dd/yy)	Approved (Yes/No) Approuvé (Oui/Non)
	Patch Empiècement	Extrusion Weld or Bead Soudure Extrusion	Pipe Boot Manchon d'étanchéité	On Panel No. Sur Panneau No.	On Seam No. Sur Soudure No.	Intersection of Panels Intersection des Panneaux	Sample Location Localisation de l'échantillon			
September 2017										
R-1	P1				3-4		At 6m from SEOS	09-17-17	09-17-17	Y
July 2018										
R-2	P2					E1-E2-E5-17		07-17-18	07-17-18	Y
R-3		E				E2-E5-E6		07-17-18	07-17-18	Y
R-4		E				E2-E3-E6		07-17-18	07-17-18	Y
R-5		E DB			E3-E6		Full seam	07-17-18	07-17-18	Y
R-6		E DB			E4-E7		Full seam	07-17-18	07-17-18	Y
R-7		E				E4-E7-23		07-17-18	07-17-18	Y
R-8		E				E4-E8-23		07-17-18	07-17-18	Y
R-9	P2					E8-23-24		07-17-18	07-17-18	Y
R-10	P3					E7-22-23		07-17-18	07-17-18	Y
R-11		E				E6-E7-21-22		07-17-18	07-17-18	Y
R-12		E				E5-E6-20-21		07-17-18	07-17-18	Y
R-13	P2					E5-19-20		07-17-18	07-17-18	Y
R-14		E				E5-18-19		07-17-18	07-17-18	Y
R-15		E				E5-16-18		07-17-18	07-17-18	Y
R-16		E				E5-16-17		07-17-18	07-17-18	Y
R-17	P3					E1-15-16-17		07-17-18	07-17-18	Y
R-18	P1				24-25		At 3,3m from SEOS	07-17-18	07-17-18	Y
R-19		E DB			24-25		From SEOS to 3,3m	07-17-18	07-17-18	Y
R-20		E				9-10-11		07-17-18	07-17-18	Y

Texel GEOSOL

Repair Report
Rapport de Réparation

Project Name / Nom de Projet: **Meliadine Industrial Pad Fuel Farm**

Project No. / No. de Projet: **C-17060 / C-18068**

QC Inspector / Inspecteur CQ: **Louis-Philippe Beauchamps**

Repair No. No. Réparation	Type & Dimensions Type et Dimensions			Location of Repair Localisation de la Réparation				Date Repaired Date Réparée (mm/dd/yy)	Date Repair Verified Date Réparée Vérifiée (mm/dd/yy)	Approved (Yes/No) Approuvé (Oui/Non)
	Patch Empiècement	Extrusion Weld or Bead Soudure Extrusion	Pipe Boot Manchon d'étanchéité	On Panel No. Sur Panneau No.	On Seam No. Sur Soudure No.	Intersection of Panels Intersection des Panneaux	Sample Location Localisation de l'échantillon			
R-21		E				E1-14-15		07-18-18	07-18-18	Y
R-22		E				E1-13-14		07-18-18	07-18-18	Y
R-23		E				E1-12-13		07-18-18	07-18-18	Y
R-24		E				E1-11-12		07-18-18	07-18-18	Y
R-25	P2					E1-8-11		07-18-18	07-18-18	Y
R-26	P1					8-9-11		07-18-18	07-18-18	Y
R-27		E				E1-7-8		07-18-18	07-18-18	Y
R-28	P2					E1-E2-7		07-18-18	07-18-18	Y
R-29		E				E2-6-7		07-18-18	07-18-18	Y
R-30		E				6-E2-E3		07-18-18	07-18-18	Y
R-31	P2					5-6-E3-E4		07-18-18	07-18-18	Y
R-32		E DB			E4-5		Between R-31 and R-33	07-18-18	07-18-18	Y
R-33	P2				E4-5		At 1,9m of int. E3-E4-5	07-18-18	07-18-18	Y
R-34		E				E4-4-5		07-18-18	07-18-18	Y
R-35		E				E4-E8-4		07-18-18	07-18-18	Y
R-36		E				E8-3-4		07-18-18	07-18-18	Y
R-37	P2					E8-3-24		07-18-18	07-18-18	Y
R-38	P2				9-10		At 6,9m from NEOS	07-18-18	07-18-18	Y
R-39		E				1-2-3		07-18-18	07-18-18	Y
R-40		E				1-3-24		07-18-18	07-18-18	Y
R-41		E				1-24-26		07-18-18	07-18-18	Y
R-42	P3					24-25-26		07-18-18	07-18-18	Y

Texel GEOSOL

Repair Report
Rapport de Réparation

Project Name / Nom de Projet: **Meliadine Industrial Pad Fuel Farm**

Project No. / No. de Projet: **C-17060 / C-18068**

QC Inspector / Inspecteur CQ: **Louis-Philippe Beauchamps**

Repair No. No. Réparation	Type & Dimensions Type et Dimensions			Location of Repair Localisation de la Réparation				Date Repaired Date Réparée (mm/dd/yy)	Date Repair Verified Date Réparée Vérifiée (mm/dd/yy)	Approved (Yes/No) Approuvé (Oui/Non)
	Patch Empiècement	Extrusion Weld or Bead Soudure Extrusion	Pipe Boot Manchon d'étanchéité	On Panel No. Sur Panneau No.	On Seam No. Sur Soudure No.	Intersection of Panels Intersection des Panneaux	Sample Location Localisation de l'échantillon			
R-43	P1				25-26		At 1m of int. 24-25-26	07-18-18	07-18-18	Y
R-44	P1				25-26		At 1,6m of int. 24-25-26	07-18-18	07-18-18	Y
R-45	P1				25-26		At 3,1m of int. 24-25-26	07-18-18	07-18-18	Y
R-46		E DB			25-26		Between R-43 and R-45	07-18-18	07-18-18	Y
R-47	P2					18-19-27		07-19-18	07-19-18	Y
R-48		E				19-27-28		07-19-18	07-19-18	Y
R-49		E				19-28-29		07-19-18	07-19-18	Y
R-50			B	24			At 1m of 24-25 and 3,3m of SEOP	07-19-18	07-19-18	Y

CHARTE/CHART : Empiècement/Patch (**P1** 0.3m à/to 0.6m; **P2** 0.6m à/to 1m; **P3** over 1m et plus), Extrusion (**E**), Embout/Pipe Boot (**B**), Cap strip (**CS**), Doublure/Reinforcement (**DB**) et/and Reconstruction

APPENDIX II

-FIELD MEMOS AND COMMUNICATIONS

Texel GEOSOL

CERTIFICAT D'ACCEPTATION DES ASSISES
SUBGRADE ACCEPTATION CERTIFICATE

Nom du projet / Project name : TANK FARM ISFF

N° du projet / Project # :

Endroit / Location : Matadi

CROQUIS / SKETCH

☐ ACCEPTATION PARTIELLE / PARTIAL ACCEPTATION
☑ ACCEPTATION COMPLETE / COMPLETE ACCEPTATION

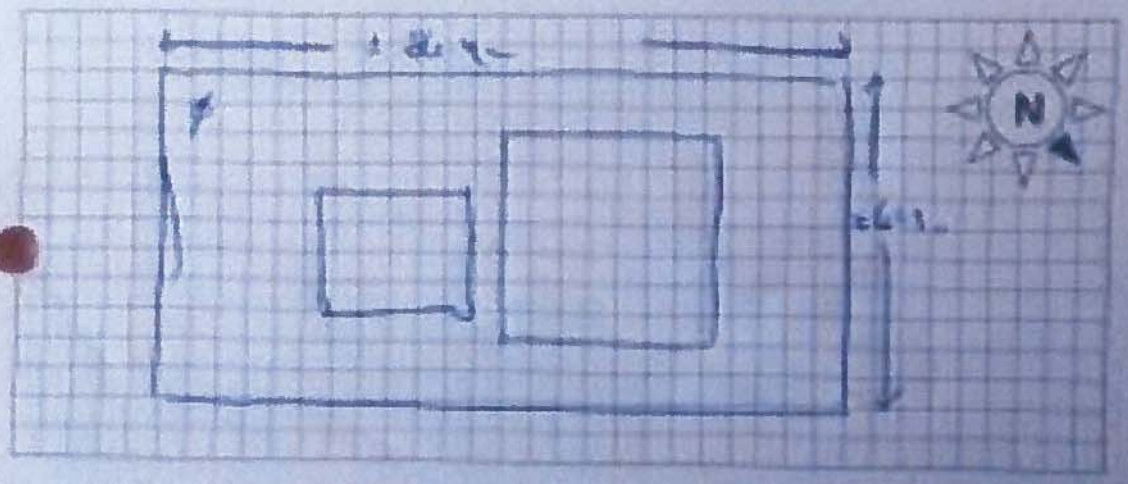

REMARQUES / COMMENTS

[illegible]	[illegible]	[illegible]	19 juillet 2008

Texel

CERTIFICAT D'ACCEPTATION PROVISOIRE

PROVISIONAL ACCEPTATION CERTIFICATE

Nom du projet / Project name: TANK FARM LSR

N° du projet / Project #:

Endroit / Location: Helidon

% des travaux réalisés / % of completion: 100%

MATÉRIAU / MATERIAL	QUANTITÉ / QUANTITY	DESCRIPTION / DESCRIPTION
Géotextile Textel NWE	3808.7 m²	Sous P1 à P29
Géomembrane NPPE 40	3808.7 m²	P1 à P29
Géotextile Textel NWE	3808.7 m²	Sur P1 à P29

CROQUIS / SKETCH

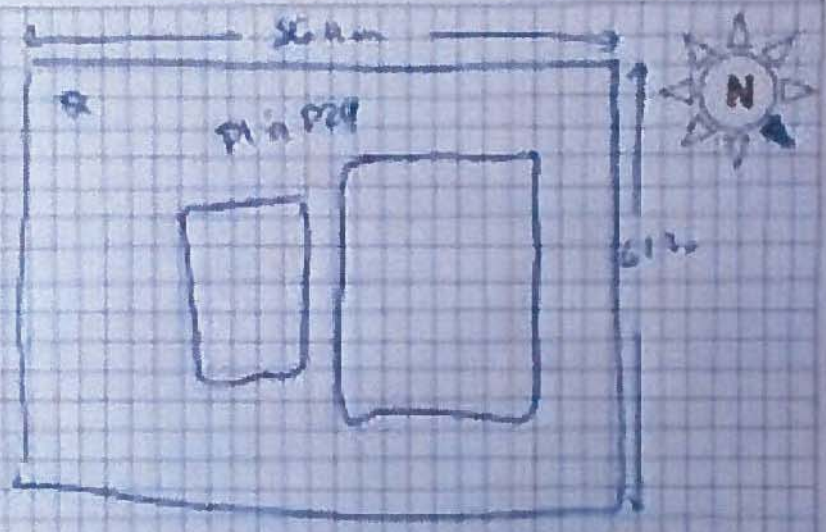

Au soussigné, représentant d'Texel soussigné de Texel, [illegible] ayant reçu et pris en charge les travaux ci-dessus décrits et conformes au contrat et qui ne y a pas de dommage apparent aux matériaux utilisés. Le site a été nettoyé de tous les déchets à la satisfaction du Propriétaire. Texel Canada s'engage à réparer tout dommage provenant du matériel défectueux ou d'installation défectueuse en accord avec les spécifications du contrat. (Non-endorsement from authorized representative of Texel)

I, the undersigned, duly authorized representative of Texel, have read and confirm to the best of my knowledge the work has been completed in accordance with specifications and the terms and conditions of the contract. There is no apparent damage to the geotextile being and only unacceptable interferences within or without the surrounding works. Tarps and other debris have been removed and the works left in a clean and safe condition to the satisfaction satisfaction. Texel Canada undertakes to rectify any damage resulting from defective materials or workmanship within conditions of contract guarantees.

Nom / Name	Signature	Titre / Title	Date
Louis Lamont	[signature]	Superintendant	19/04/2018

Certificat accepté par le représentant de Texel Canada / Certificate accepted by Texel Canada representative

Dans le cas où les travaux ... Notre ... [illegible]

[signature]			
[signature] (Signature / Signature)	(Signature / Signature)	[signature] (Nom / Name)	(Date / Date)

Option PQ Certificat d'acceptation provisoire - Provisional acceptation certificate Modèle 06

APPENDIX III

US-EPA CLASSIFICATION FOR TYPES OF BREAK

FILLET–EXTRUDED GEOMEMBRANE WELD

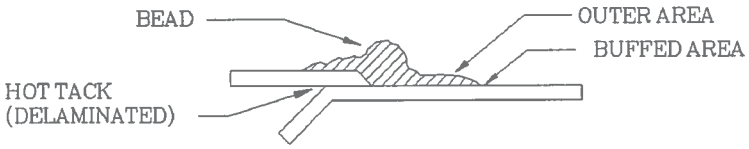

TYPES OF BREAKS	CODE	BREAK DESCRIPTION	CLASSI–FICATION [a]
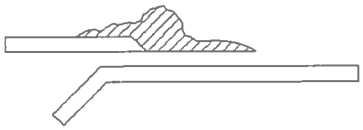	AD1	FAILURE IN ADHESION. SPE–CIMENS MAY ALSO DELAMI–NATE UNDER THE BEAD AND BREAK THROUGH THE THIN EXTRUDED MATERIAL IN THE OUTER AREA.	NON–FTB
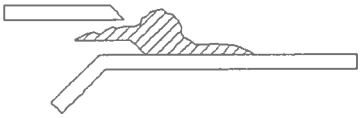	AD2	FAILURE IN ADHESION.	NON–FTB
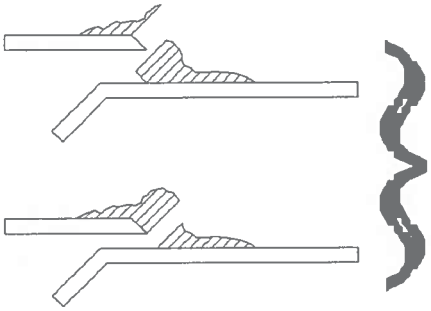	AD–WLD	BREAK THROUGH THE FILLET. BREAKS THROUGH THE FIL–LET RANGE FROM BREAKS STARTING AT THE EDGE OF THE TOP SHEET TO BREAKS THROUGH THE FILLET AFTER SOME ADHESION FAILURE BETWEEN THE FILLET AND THE BOTTOM SHEET.	NON–FTB [b]
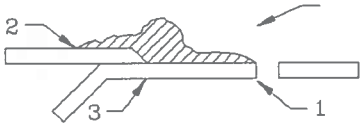	SE	BREAK AT SEAM EDGE. INDI–CATE LOCATION BY 1,2 OR 3	FTB
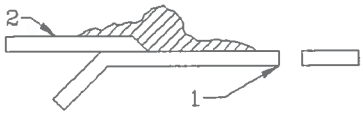	BRK	BREAK IN THE SHEET. USE 1 TO INDICATE BOTTOM SHEET AND 2 TO INDICATE TOP SHEET. IF BREAK IS IN BUFFED AREA, INDICATE WITH "(B)".	FTB
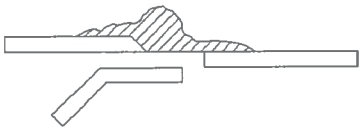	AD–BRK	BREAK IN THE BOTTOM SHEETING AFTER SOME ADHESION FAILURE BETWEEN THE FILLET AND THE BOTTOM SHEET. (APPLICABLE TO PEEL ONLY).	FTB
	HT	BREAK AT THE EDGE OF THE HOT TACK FOR SPECIMENS WHICH COULD NOT BE DE–LAMINATED IN THE HOT TACK.	NO TEST

[a] FTB="FILM–TEAR BOND."

[b] ACCEPTANCE OF AD–WLD BREAKS MAY DEPEND ON WHETHER TEST VALUES MEET A MINIMUM SPECIFICATION VALUE AND NOT ON CLASSIFICATION AS A FTB OR NON–FTB BREAK.

DOUBLE–TRACK GEOMEMBRANE WELD

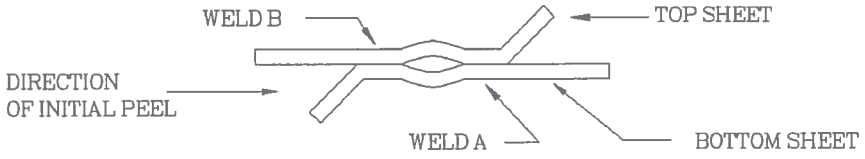

TYPES OF BREAK	CODE	BREAK DESCRIPTION	CLASSI–FICATION [a]
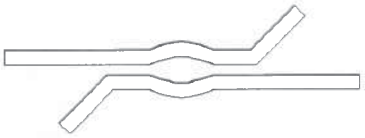	AD	ADHESION FAILURE	NON–FTB
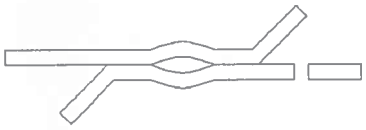	BRK	BREAK IN SHEETING. BREAK CAN BE IN EITHER TOP OR BOTTOM SHEET.	FTB
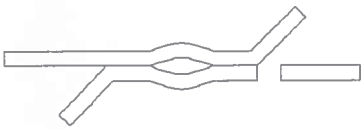	SE1	BREAK AT OUTHER EDGE OF SEAM. BREAK CAN BE IN EITHER TOP OR BOTTOM SHEET.	FTB
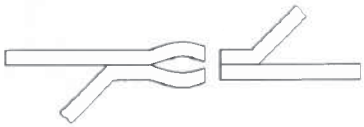	SE2	BREAK AT INNER EDGE OF SEAM THROUGH BOTH SHEETS	FTB
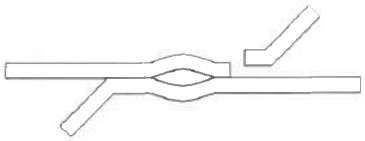	AD–BRK	BREAK IN FIRST SEAM AFTER SOME ADHESION FAILURE. BREAK CAN BE IN EITHER THE TOP OR BOTTOM SHEET.	FTB

[a] FTB="FILM–TEAR BOND."

APPENDIX IV

-RECORD DRAWING

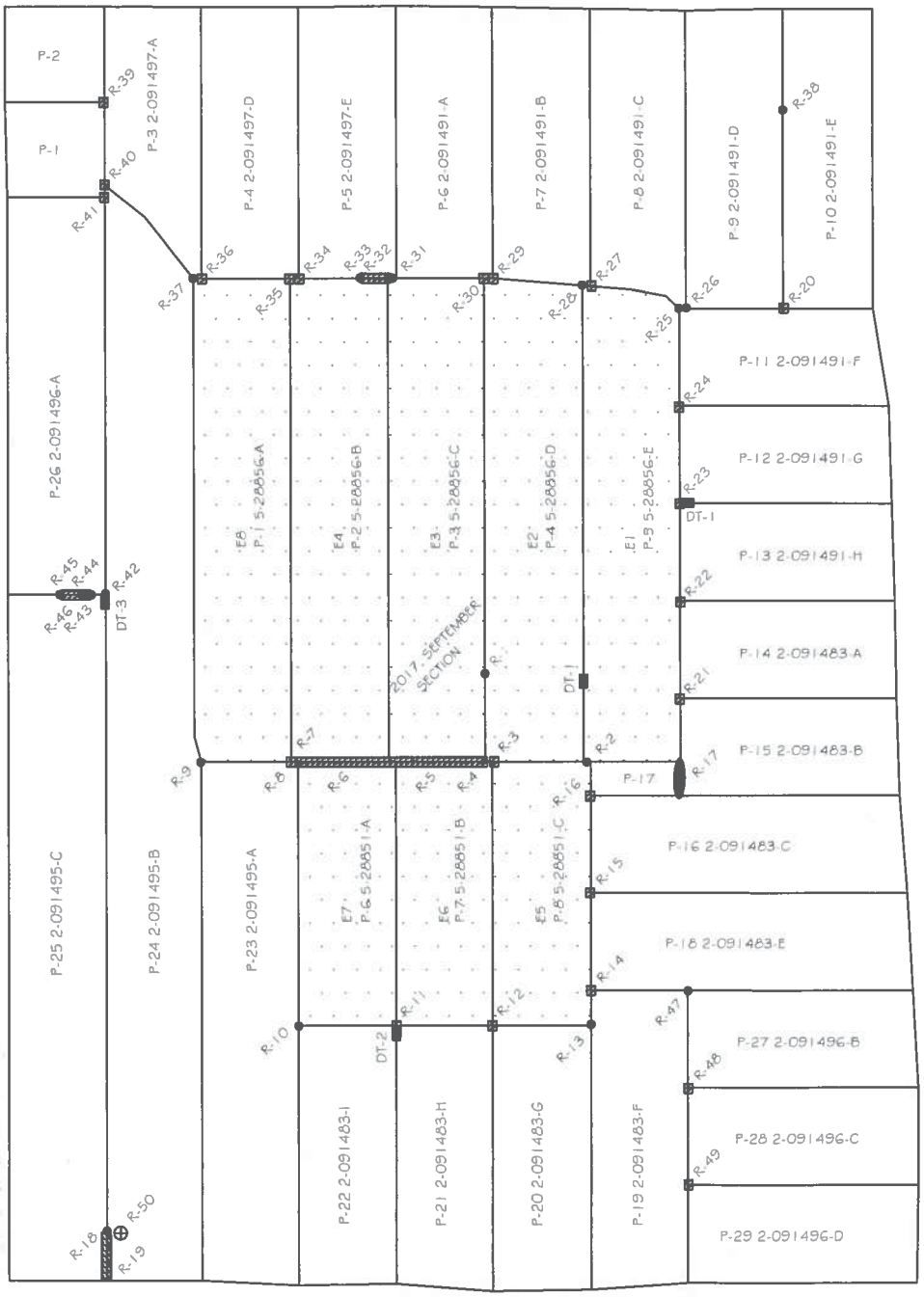

NO PANNEAU / PANEL NO	ROULEAU NO / ROLL NO	
P-1	2-091497	A
P-2	2-091497	B
P-17	2-091483	D

0 25 50m

ÉCHELLE: 1:500

N

INGÉNIEUR / ENGINEER:

AGNICO EAGLE CONSTRUCTION

LÉGENDE / LEGEND:

- EMPIÈCEMENT / PATCH
- MANCHON TUYAU / PIPE BOOT
- DESTRUCTIF / DESTRUCTIVE
- SOUDURE EXTRUSION / EXTRUSION WELD
- 1 PANNEAU NO. / PANEL NO.
- 1-30474 ROULEAU NO. / ROLL NO.
- ANCRAGE MECANIQUE / MECHANICAL ANCHORAGE
- SOUDURE EXISTANTE / EXISTING SEAM

CLIENT / CUSTOMER:

NUNA KIVALLIQ EARTHWORKS INC

TYPE DE PRODUIT INSTALLÉ / PRODUCT TYPE INSTALLED

GEOTEXTILE 1 GOE - HDPE GOMIL - GEOTEXTILE 1 GOE

TYPE DE PROJET / PROJECT TYPE

INDUSTRIAL PAD FUEL FARM LINING AS-BUILT

NOM DU PROJET / PROJECT NAME

AGNICO EAGLE MELIADINE AEM009 - MELIADINE INDUSTRIAL PAD FUEL FARM

Texel GEOSOL

1300, 2e Rue, Parc industriel
Sainte-Marie, QC, Canada
G1V 4T2

NO. PROJET / PROJ. NO.:	C-17060/C-18068
FICHIER AUTOCAD / AUTOCAD FILE:	C-18068ipff2.dwg
DATE (jj-mm-aa) / DATE (dd-mm-yy):	01/08/18
DESSINÉ PAR / DRAWN BY:	E.B.
VÉRIFIÉ PAR / VERIDIED BY:	E.B.
APPROUVÉ PAR / APPROVED BY:	F.T.
ÉCHELLE / SCALE:	1/500
DESSIN NO / DRAWING NO:	1/1

APPENDIX L

Request for Information

AGNICO EAGLE

Request For Information

Project No: 6515 Contract No: C-005 RFI No: 6515-C-230-005_001 Rev: 0
Meliadine Project
Site RFI Initiator: Matt Gallant Date: Mar 19, 2017

1. REFERENCE DOCUMENTS :

Title(s):	Number:	Revision:
Rankin Fuel Farm and Laydown Area	65-131-230-201	H

2. DESCRIPTION , JUSTIFICATION OF THE RFI AND PROPOSED SOLUTION :

1. The typical HDPE liner specifies an above liner thickness of 200 mm for the Fuel Farm Floor, and 150mm for the dike slopes.
   a. Please clarify the minimum lift thickness for equipment operating over liner, our proposed methode of placement over the liner is with a Cat D5 dozer.
2. The Dike and Tank Pad Fill Detail specifies that 30mm minus granular fill material placed in lifts with a maximum thickness of 150mm nad compacted to 98%
   a. Please confirm. the overliner lift and compaction requirements. Can the overliner be placed in one lift?
3. We recommend that the 30mm Minus Above the liner be increased to > 300mm thick to facilitate constructability.

Prepared by: Matt Gallant Signature: Matt Gallant Date: Mar 19, 2017

3. TECHNICAL RESPONSE FROM ENGINEERING AND/OR VALIDATION OF PROPOSED SOLUTION :

The use of CAT D5 Dozer equipment for granular fill placement over the liner requires a minimum fill thickness of 300 mm to protect it. We recommend to increase the thickness of this layer and place 300 mm of 0-30 mm granular fill material over the liner in one lift and compact it by track packing only, with the CAT D5 Dozer in the entire fuel tank farm area. In addition, the remaining 0-30 mm granular fill layer for the tanks foundation will be placed in 200 mm thick lifts and compacted to 98% Standard Proctor Maximum Dry Density.

To avoid increasing the total required material quantities, the thickness of 0-30 mm granular fill material layer underneath the liner will be reduced accordingly and will be compacted to 98% Standard Proctor Maximum Dry Density. Under the liner system, the particle size of the top 300 mm of the 0-600 mm granular fill layer should not exceed Ø 200 mm.

For any equipment yielding heavier loads than a CAT D5 Dozer, the fill thickness above the liner shall be increased to allow for circulation. For a 10 ton packer, 500 mm is the minimum required fill thickness. For any other equipment, a specific request shall be submitted for the Engineer's approval.

Engineering : Rene Panazan Signature: Date: Mar 22, 2017

4. IF NOT TECHNICAL RFI VALIDATION OF PROPOSED SOLUTION BY SITE SUPERVISION

Deviation Request: ☐ No ☐ Yes

	Name	Signature	Date
Superintendent:			
c.c. Contract Administrator:			

AGNICO EAGLE

Request For Information

Project No: 6515 Meliadine Project	Contract No: C-009	RFI No: 6515-C-230-009_015	Rev: 0
Site RFI Initiator: Jennifer Pyliuk		Date: July 25, 2017	

1. Reference Documents :

Title(s):	*Number:*	*Revision:*
Industrial Site Fuel Tank Farm – Cross Section and Details	65-000-230-215	1
Industrial Site Fuel Tank Farm – Ground Leveling – Finished Grade Elevation Plan View	65-000-230-223	1

2. Description , Justification of the RFI and Proposed Solution :

Due to current shortages of available underground run-of-mine (ROM) on site, the following material substitutions are proposed for construction of the Industrial Site Fuel Tank Farm (see details):

1. ROM Rockfill (600 mm minus) for construction of the containment area outside the tank pedestal footprints and perimeter berms to be replaced with Class A Esker material (600 mm minus).
2. Elimination of the Transition Rockfill (200 mm minus) from the under liner in the above noted area.
3. ROM Rockfill (600 mm minus) for construction of the Service Pad to be replaced with Class A esker material (600 mm minus).

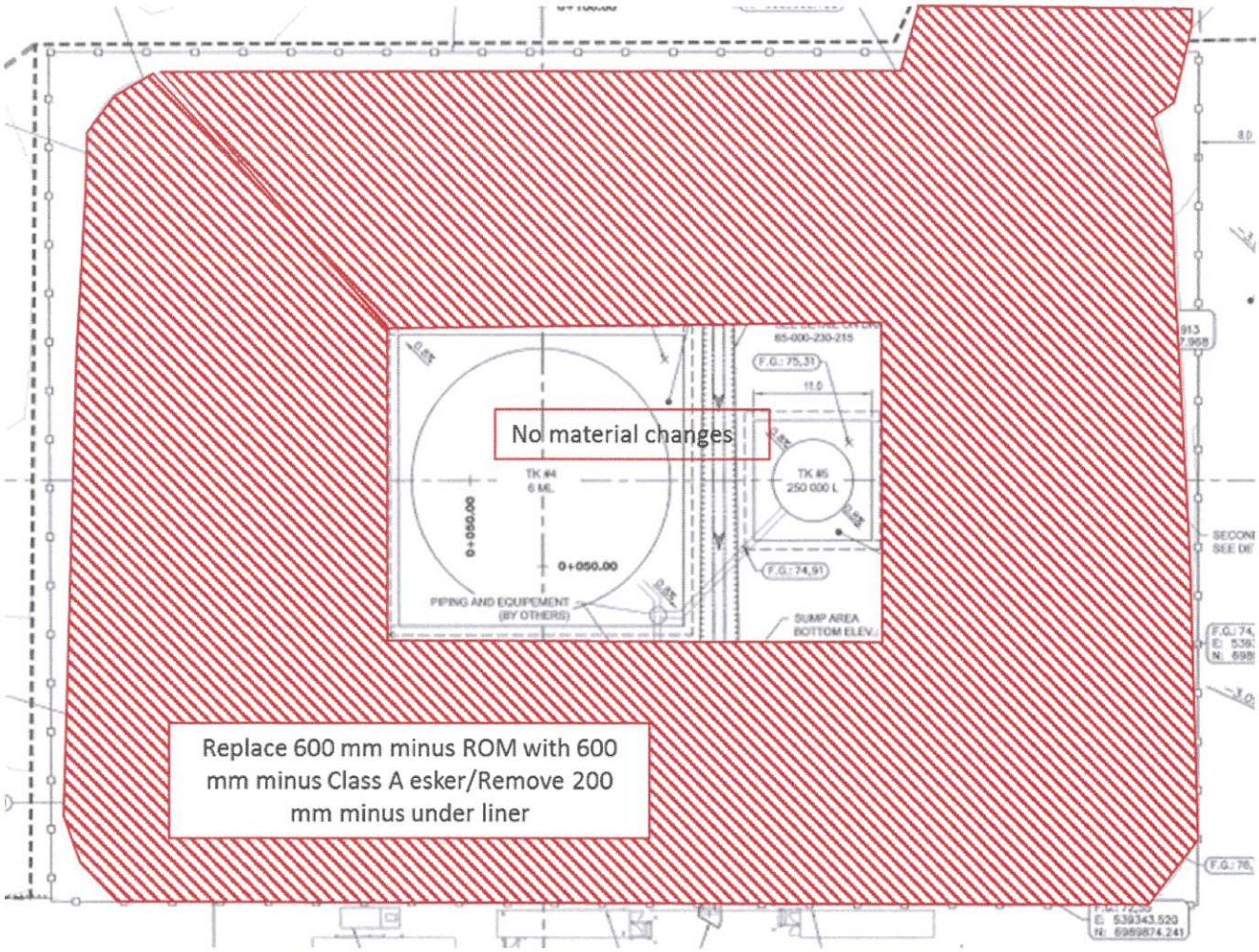

AGNICO EAGLE

Request For Information

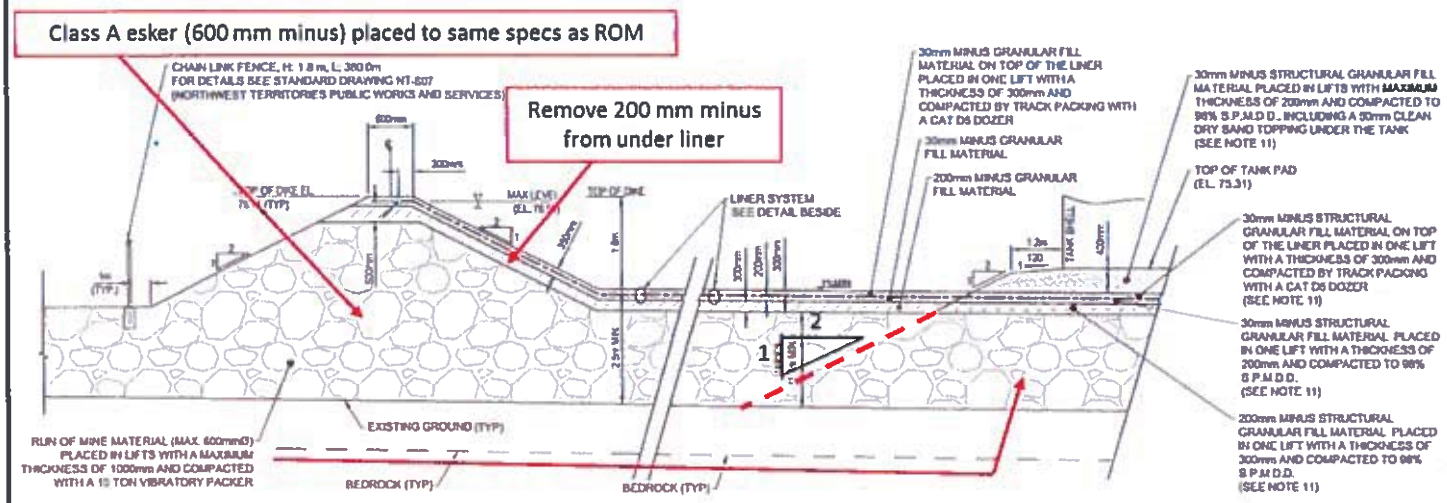

DIKE AND TANK PAD FILL DETAIL

N.T.S.

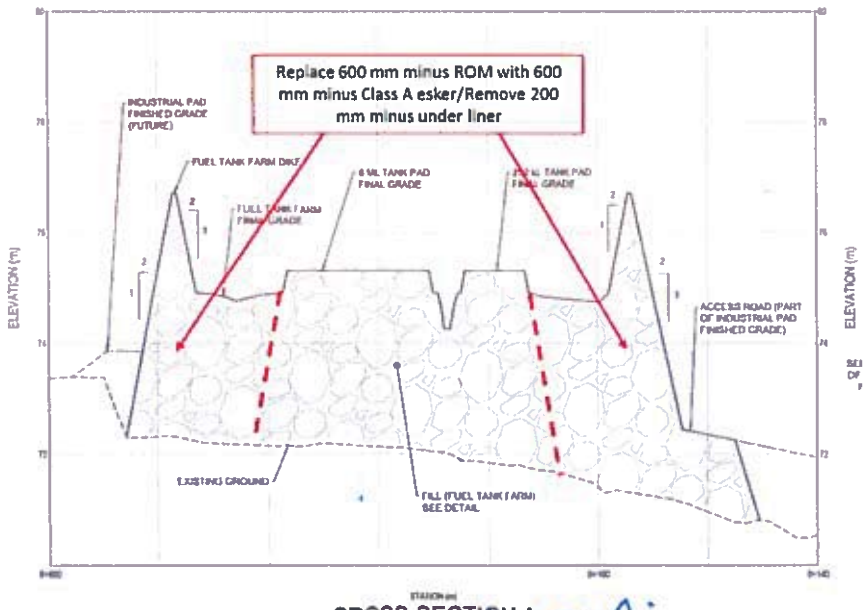

CROSS-SECTION A

Prepared by: Jennifer Pyliuk Signature: Jennifer Pyliuk Date: July 25, 2017

3. TECHNICAL RESPONSE FROM ENGINEERING AND/OR VALIDATION OF PROPOSED SOLUTION :

Engineering : _____ Signature: _____ Date: _____

4. IF NOT TECHNICAL RFI VALIDATION OF PROPOSED SOLUTION BY SITE SUPERVISION

Deviation Request: ☐ No ☐ Yes

	Name	Signature	Date
Superintendent:			
c.c. Contract Administrator:			

AGNICO EAGLE

Request For Information

3. TECHNICAL RESPONSE FROM ENGINEERING AND/OR VALIDATION OF PROPOSED SOLUTION :

1. ***ROM Rockfill (600mm minus) substitution with Class A Esker material (600mm minus) for the fuel farm floor outside the tank pedestal and its projection slope 1V:2H*** : Accepted provided that the material is sufficiently graded and with adequate moisture to achieve the minimum compaction specified on drawings (90% standard proctor maximum dry density). The maximum lift thickness should also be reduced to adapt with the material quality, the optimum thickness shall be determined on site with the field engineer. A special attention to the quality of material, lifts, compaction and slope to have a very good general stability achieved with the material on the perimeter berm (dike) is required.
2. ***Elimination of transition rockfill (200mm minus) in the same area***: Accepted provided that the material is sufficiently graded and with adequate moisture to achieve the minimum compaction specified on drawings (95% standard proctor maximum dry density). The maximum particle size shall be limited to 200mm and the granular material shall be placed in lifts not exceeding 300mm in the associated layer underneath the liner system.
3. ***ROM Rockfill (600mm minus) substitution with Class A Esker material (600mm minus) for the Service Pad*** : Accepted provided that the material is sufficiently graded and with adequate moisture to achieve the minimum compaction specified on drawings (90% standard proctor maximum dry density). The maximum lift thickness should also be reduced to adapt with the material quality, the optimum thickness shall be determined on site with the field engineer.

Engineering : JOSÉE ALARIE Signature: Josée Alarie Date: 2017-07-25

4. IF NOT TECHNICAL RFI VALIDATION OF PROPOSED SOLUTION BY SITE SUPERVISION

Deviation Request: ☐ No ☐ Yes

	Name	Signature	Date
Superintendent:			
c.c. Contract Administrator:			