DWG. NO. H337697-4470-10-035-0006

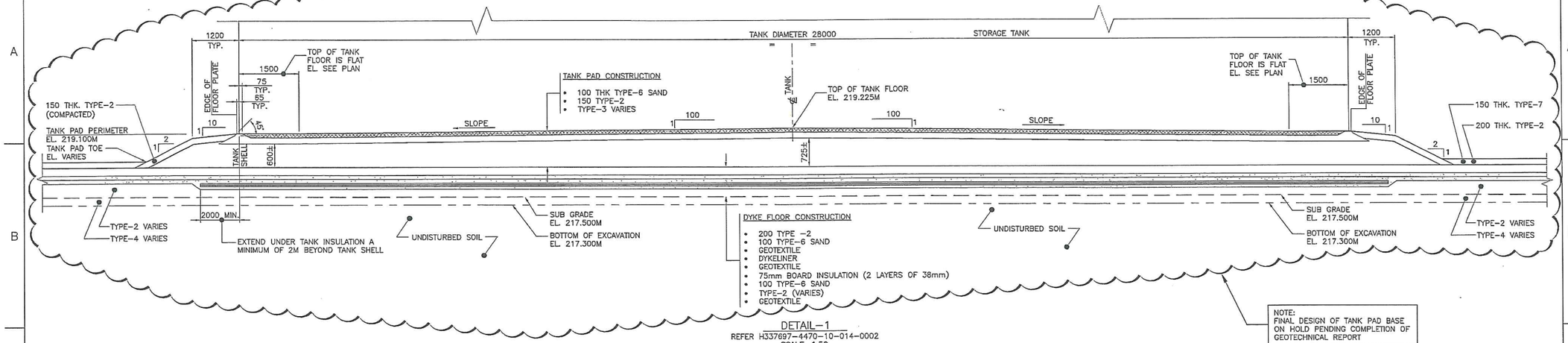

NOTE:
FINAL DESIGN OF TANK PAD BASE ON HOLD PENDING COMPLETION OF GEOTECHNICAL REPORT

DETAIL-1
REFER H337697-4470-10-014-0002
SCALE: 1:50

0 500 1000 1500 2000 2500
SCALE: 1:50 IN MILLIMETRES

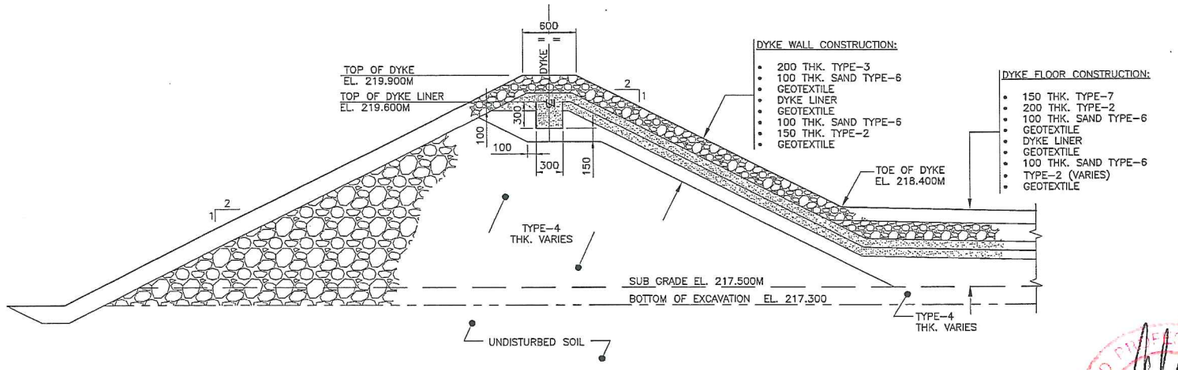

SECTION-D
TYPICAL DYKE CONSTRUCTION
REFER: H337697-4470-10-014-0002
SCALE: 1:30

0 2.0 4.0 6.0 8.0 10.0
SCALE: 1:200 IN METRES

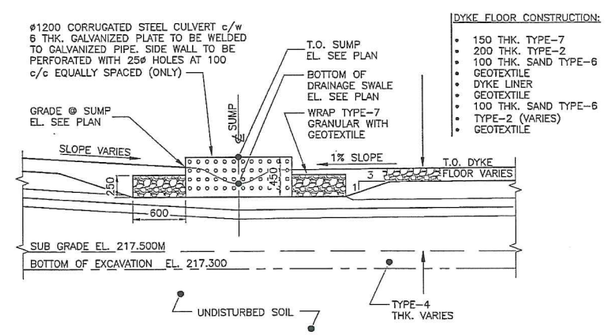

DETAIL-3
TYPICAL DYKE SUMP CONSTRUCTION
REFER: H337697-4470-10-014-0001
SCALE: 1:30

0 2.0 4.0 6.0 8.0 10.0
SCALE: 1:200 IN METRES

REGISTERED PROFESSIONAL ENGINEER
J.W. LASSON
LICENSEE
NT/NU
Oct 6/11

DRAWING NO.	DRAWING TITLE
REFERENCE DRAWINGS	

PERMIT TO PRACTICE
HATCH LTD.
Signature
Date
PERMIT NUMBER: P 512
The Association of Professional Engineers, Geologists and Geophysicists of NWT/NU

NO.	DESCRIPTION	BY	CHK'D	APP'D	DATE
–	–		–	–	
REVISIONS					

REV.	ISSUE FOR	AUTH. BY	DATE
B	ISSUED FOR ENVIRONMENTAL PERMIT	FB	11-09-23
A	ISSUED FOR PERMITTING - PDM	FB	11-09-09
ISSUE AUTHORIZATION			

HATCH™

DESIGNED BY HPC DATE 11-05-13	DRAWN BY HPC DATE 11-05-13
CHECKED BY FGK DATE 11-08-05	DISCIP. ENGR. PC DATE 11-05-13
PROJ. DES. COORD. DATE	PROJ. ENGR. F. BUTTS DATE 11-09-23
PROJ. MGR. DATE	

Baffinland
IRON ORE COMPANY

MARY RIVER PROJECT

MINE SITE
MINE SERVICES TANK FARM
SECTIONS AND DETAILS

SCALE 1:250 OR AS NOTED | DWG. NO. H337697-4470-10-035-0006 | REV. B