DWG. NO. H337697-7000-05-030-0011

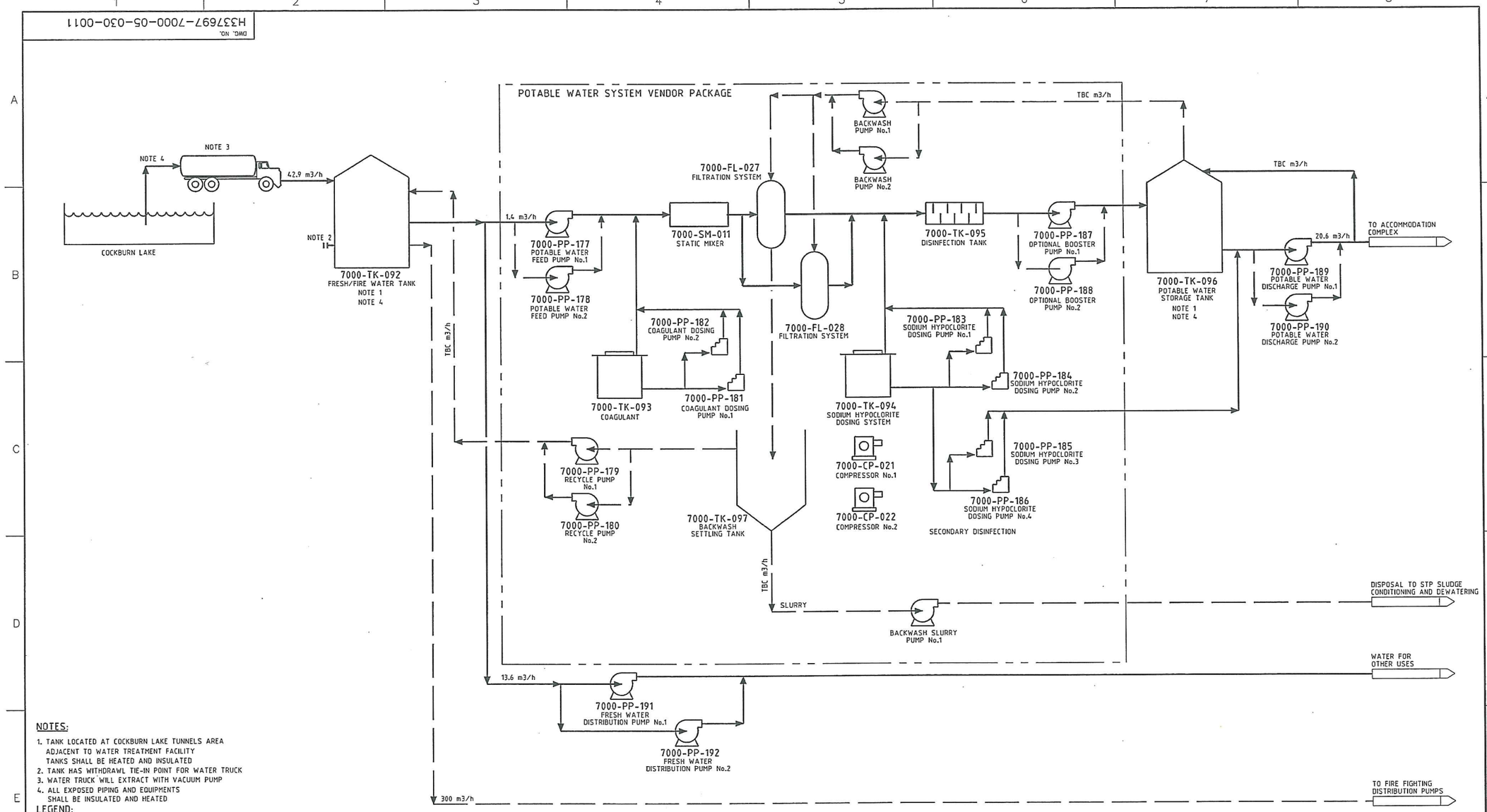

NOTES:

1. TANK LOCATED AT COCKBURN LAKE TUNNELS AREA ADJACENT TO WATER TREATMENT FACILITY TANKS SHALL BE HEATED AND INSULATED
2. TANK HAS WITHDRAWL TIE-IN POINT FOR WATER TRUCK
3. WATER TRUCK WILL EXTRACT WITH VACUUM PUMP
4. ALL EXPOSED PIPING AND EQUIPMENTS SHALL BE INSULATED AND HEATED

LEGEND:

- PRIMARY FLOW
- SECONDARY FLOW
- INTERMITTENT OR ALTERNATE FLOW
- MATERIAL FLOW
- VENDOR PACKAGE LIMIT

DRAWING NO.	DRAWING TITLE

REFERENCE DRAWINGS

REGISTERED PROFESSIONAL ENGINEER J. CASSON LICENSEE NTINU Sept 20/11

NO.	DESCRIPTION	BY	CHK'D	APP'D	DATE
B	CHANGES FROM INTERNAL REVIEW	RR	RK	AZ	9/6/2011
A	INTERNAL REVIEW	JF	RK	AZ	8/24/2011

REVISIONS

REV.	ISSUE FOR	AUTH. BY	DATE
B	ENVIRONMENTAL PERMIT	RK	AZ	9/6/2011
A	INTERNAL REVIEW	RK	AZ	8/24/2011

ISSUE AUTHORIZATION

HATCH™

DESIGNED BY R.KAPADIA DATE 2011-08-03	DRAWN BY J.FESAR DATE 2011-08-03
CHECKED BY R.KAPADIA DATE 2011-08-24	DISCIP. ENGR. A.ZLATIC DATE 2011-08-03
PROJ. DES. COORD. DATE	PROJ. ENGR. J. CASSON DATE
PROJ. MGR. H. CHARALAMBU DATE	

Baffinland Iron Mines Corporation

PROCESS FLOW DIAGRAM

COCKBURN LAKE TUNNELS AREA POTABLE WATER SYSTEM

SCALE OR AS NOTED

DWG. NO. H337697-7000-05-030-0011

REV. B

$$DATAENTRY$$