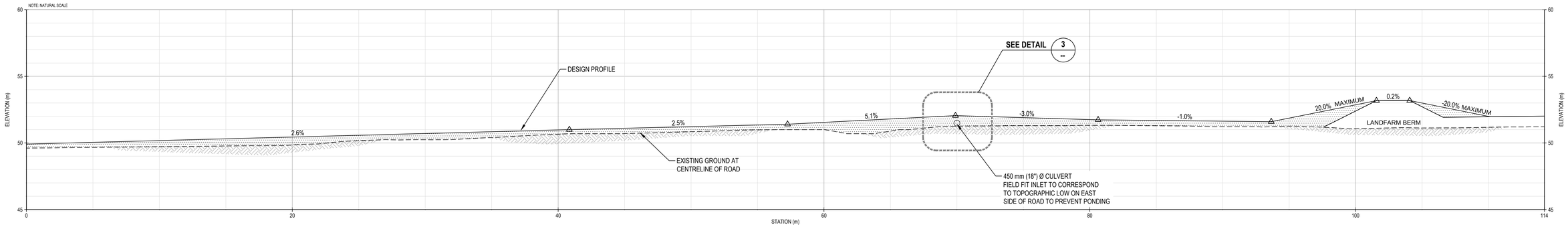

LANDFARM ACCESS ROAD PROFILE

N.T.S.

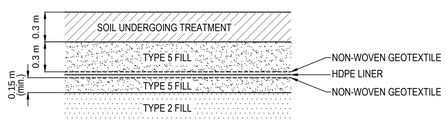

DETAIL - LINER SYSTEM 1 C103

N.T.S.

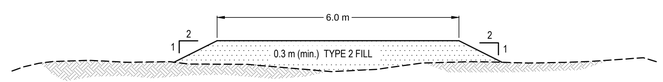

DETAIL - TYPICAL 6.0 m ACCESS ROAD (FILL)

N.T.S.

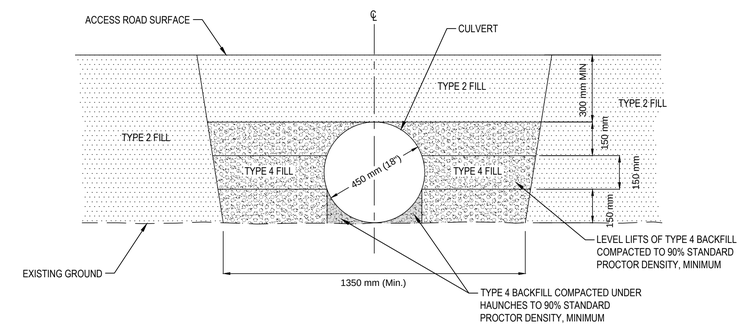

DETAIL - CULVERT SECTION 3 C104

N.T.S.

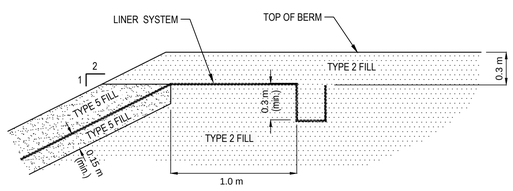

DETAIL - LINER ANCHORING 2 C103

N.T.S.

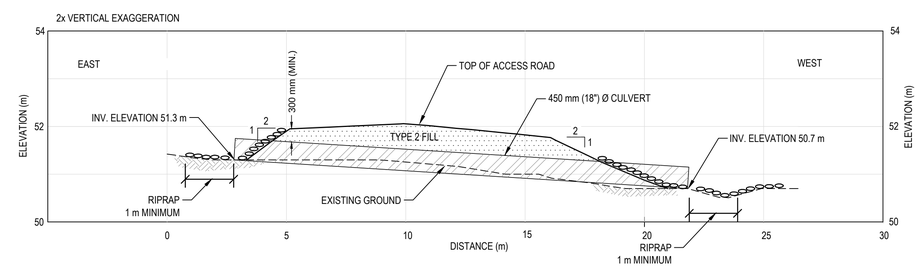

DETAIL - CULVERT PROFILE 4 C104

N.T.S.

E349000-2550-10-042-0005

NUM	DATE	DWN	CKD	APR	DESCRIPTION
0	NOV 23/12	DRG	WTH	KWJ	ISSUED FOR CONSTRUCTION

REVISIONS

NUM	DATE	APR	DESCRIPTION
A	MAR 23/12	WTH	ISSUED FOR REVIEW

DRAWING STATUS

STATUS: ISSUED FOR CONSTRUCTION

PERMIT TO PRACTICE
EBA ENGINEERING CONSULTANTS LTD.
Signature
Date Nov. 23, 2012
PERMIT NUMBER: P 016
NWT/NU Association of Professional Engineers and Geoscientists

PERMIT

REGISTERED PROFESSIONAL ENGINEER
W.T. HORNE
LICENSEE
N.W.T.
Nov 23 2012

PROFESSIONAL SEAL

CLIENT
Baffinland Iron Mines Corporation

eba A TETRA TECH COMPANY

LANDFARM DESIGN
MILNE INLET, NU

LANDFARM ACCESS ROAD - PROFILE AND MISCELLANEOUS DETAILS

PROJECT No.	OFFICE	DES	CKD	REV	DRAWING
E14101174	EDM	DF/DRG	DF	0	C105
DATE: March 2012	SHEET No. 5 of 6	DWN MM/DRG	APP WTH	STATUS --	

O:\Edmonton\Drafting\PROJECTS\E14101174\Production Drawings\PCS\E14101174_C101-C105_R0_IFC.dwg [C105] November 23, 2012 - 10:07:40 pm BY: DAWNE, DON]