DWG. NO. H349000-2613-60-011-0011

NOTES:

1. FOR SPECIFICATION AND INSTALLATION NOTES SEE DWG 2613-60-011-0014.

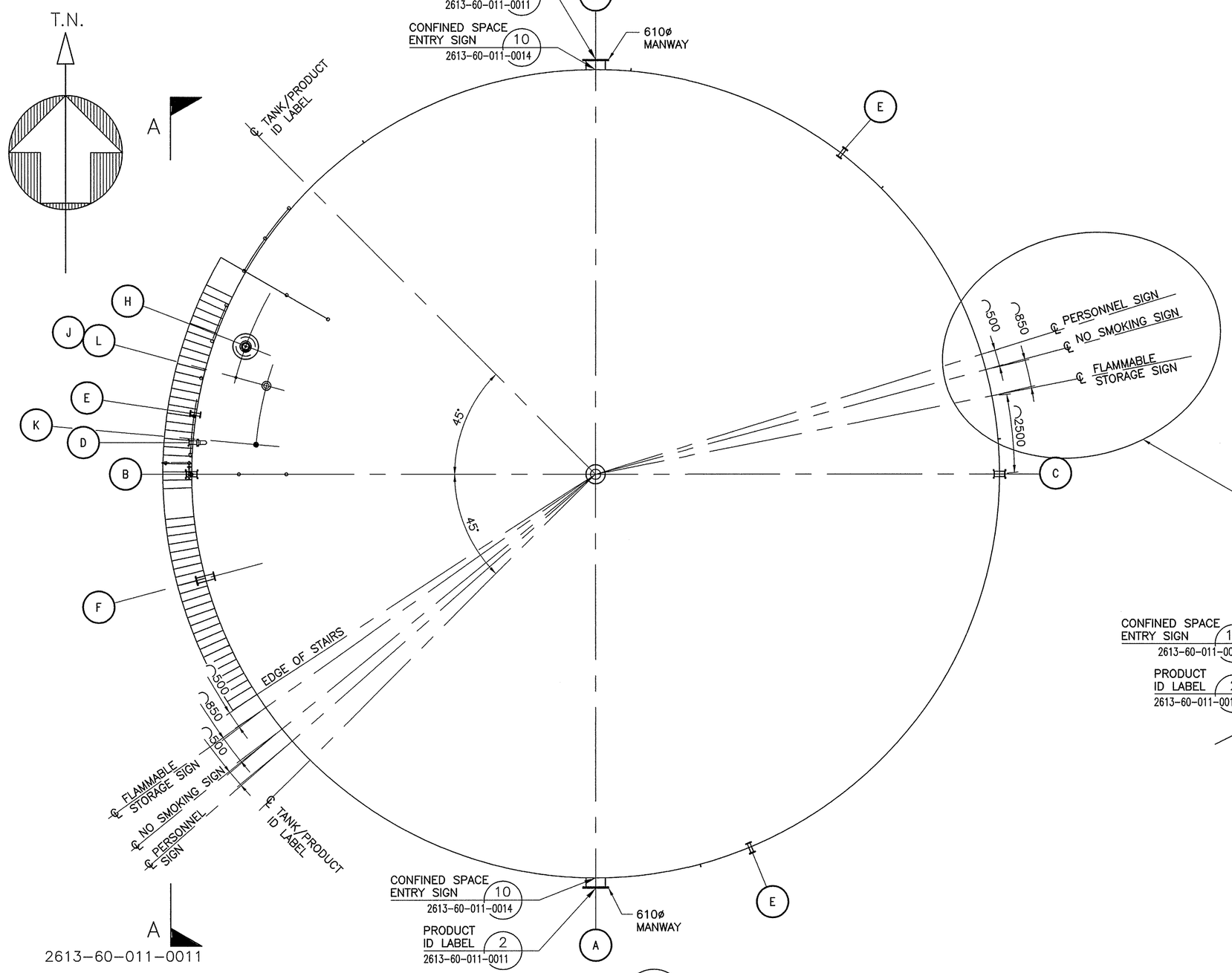

PLAN 1 2613-60-011-0010
STORAGE TANK
SCALE: 1:100

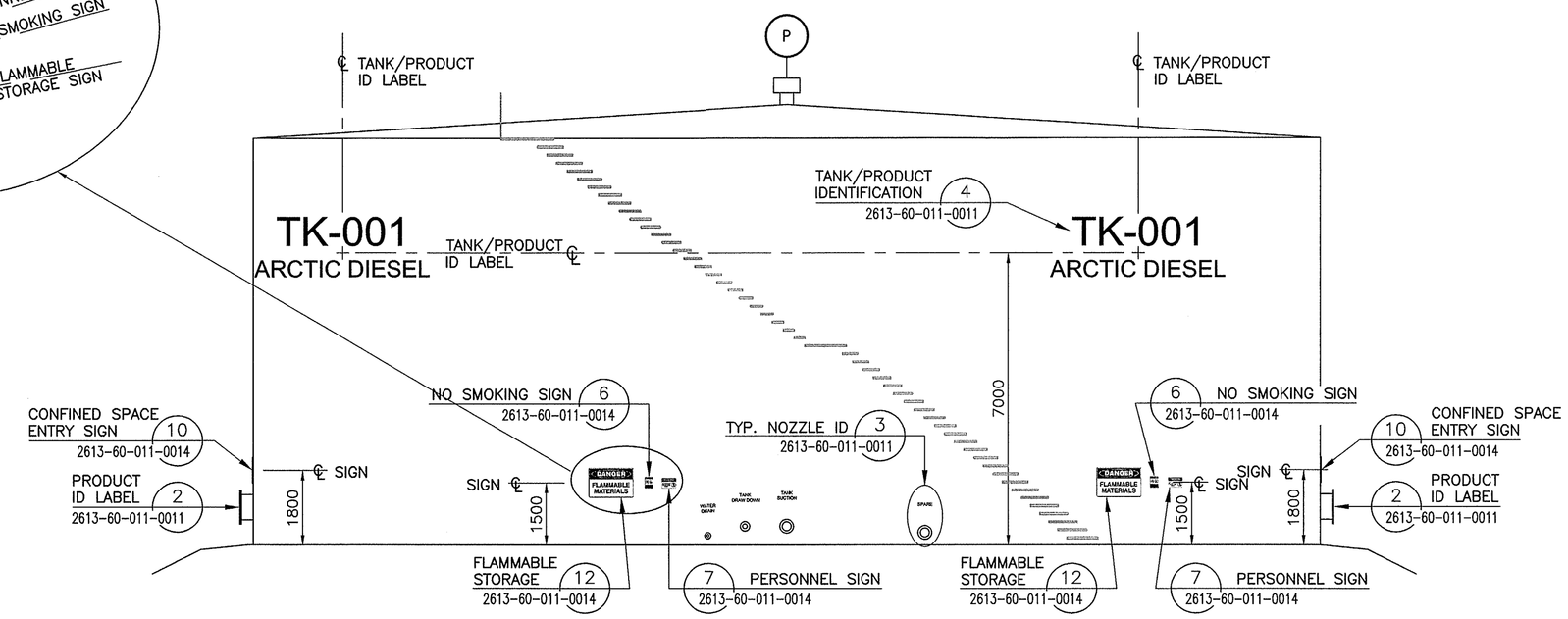

ELEVATION A 2613-60-011-0011
STORAGE TANK
SCALE: 1:100

TANK NOZZLE IDENTIFICATION CHART

IDENTIFICATION LABEL	NOZZLE LOCATION	TEXT SIZE (MM)	TEXT COLOR	APPURTENANCE ITEM
SHELL MANWAY	SHELL	75x10	YELLOW	A
TANK SUCTION	SHELL	75x10	YELLOW	B
TANK FILL	SHELL	75x10	YELLOW	C
TANK DRAW-DOWN	SHELL	75x10	YELLOW	D
WATER DRAIN NOZZLE	SHELL	75x10	YELLOW	E
SPARE SHELL NOZZLE	SHELL	75x10	YELLOW	F
ROOF MANWAY c/w THIEF HATCH	ROOF	75x10	YELLOW	H
SPARE	ROOF	75x10	YELLOW	J
SPARE	ROOF	75x10	YELLOW	K
RADAR GAUGE	ROOF	75x10	YELLOW	L
ROOF VENT	ROOF	75x10	YELLOW	P

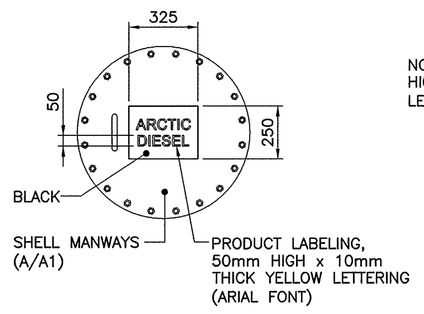

DETAIL 2 2613-60-011-0011
PRODUCT ID LABEL
SCALE: 1:20

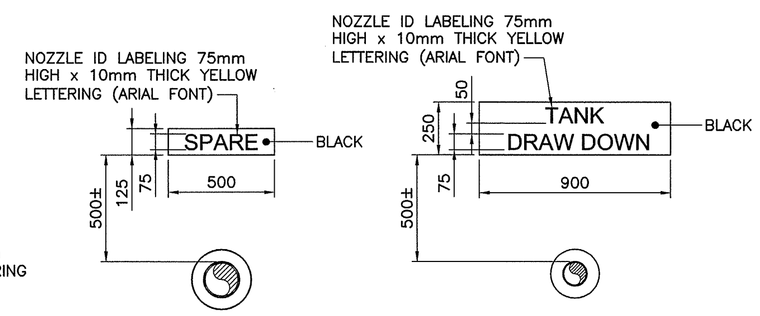

DETAIL 3 2613-60-011-0011
TYP. NOZZLE ID
SCALE: 1:20

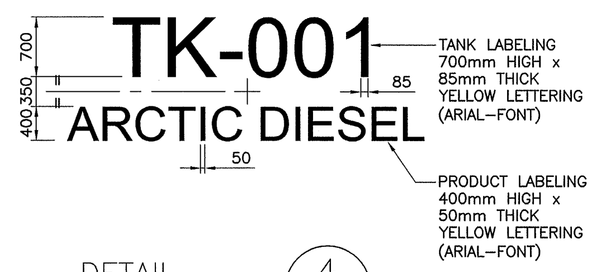

DETAIL 4 2613-60-011-0011
TANK/PRODUCT ID
SCALE: 1:50

DRAWING NO.	DRAWING TITLE

REFERENCE DRAWINGS

THIS DRAWING WAS PREPARED FOR THE EXCLUSIVE USE OF BAFFINLAND IRON CORPORATION PURSUANT AND IS ISSUED PURSUANT TO THE AGREEMENT BETWEEN CLIENT AND HATCH LTD. ("HATCH"). UNLESS OTHERWISE AGREED IN WRITING WITH CLIENT, OR SPECIFIED ON THIS DRAWING, (A) HATCH DOES NOT ACCEPT ANY LIABILITY WHATSOEVER AND ALL LIABILITY IS HERE DISCLAIMED EXPRESS FROM PARTY TO PARTY, OR ARISING ON TORT, FOR ANY USE OF THIS DRAWING, OR ANY MODIFICATION OR REUSE OF THIS DRAWING BY CLIENT, AND (B) THIS DRAWING IS CONFIDENTIAL AND ALL INTELLECTUAL PROPERTY RIGHTS ENGOVED OR REFERENCED IN THIS DRAWING REMAIN THE PROPERTY OF HATCH.

NO.	DESCRIPTION	BY	CHK'D	APP'D	DATE

REVISIONS

REGISTERED PROFESSIONAL ENGINEER F.E. BUTTS LICENSEE NT/NU

REV.	ISSUE FOR	AUTH. BY		DATE
0	ISSUED FOR CONSTRUCTION	DS	FB	13-07-23

ISSUE AUTHORIZATION

HATCH™

DESIGNED BY D. STEPHENSON DATE 13-07-04	DRAWN BY B. BROPHY DATE 13-07-04
CHECKED BY DATE 13-07-23	DISCIP. ENGR. DATE 13-07-23
PROJ. DES. COORD. T. THERTELL DATE 13-07-23	PROJ. ENGR. J. CLELAND DATE 13-07-23
PROJ. MGR. S. PERRY DATE –	

Baffinland

MARY RIVER PROJECT

MILNE INLET
TANK SIGNAGE
TK-001

SCALE AS NOTED OR AS NOTED

DWG. NO. H349000-2613-60-011-0011

REV. 0

ORIGINAL SHEET SIZE: ISO A1 (841 x 594)

$TIME$
$FILE$
$DATE$
$USERNAME$