DWG. NO. H349000-2613-60-011-0012

NOTES:

1. FOR SPECIFICATION AND INSTALLATION NOTES SEE DWG 2613-60-011-0014.

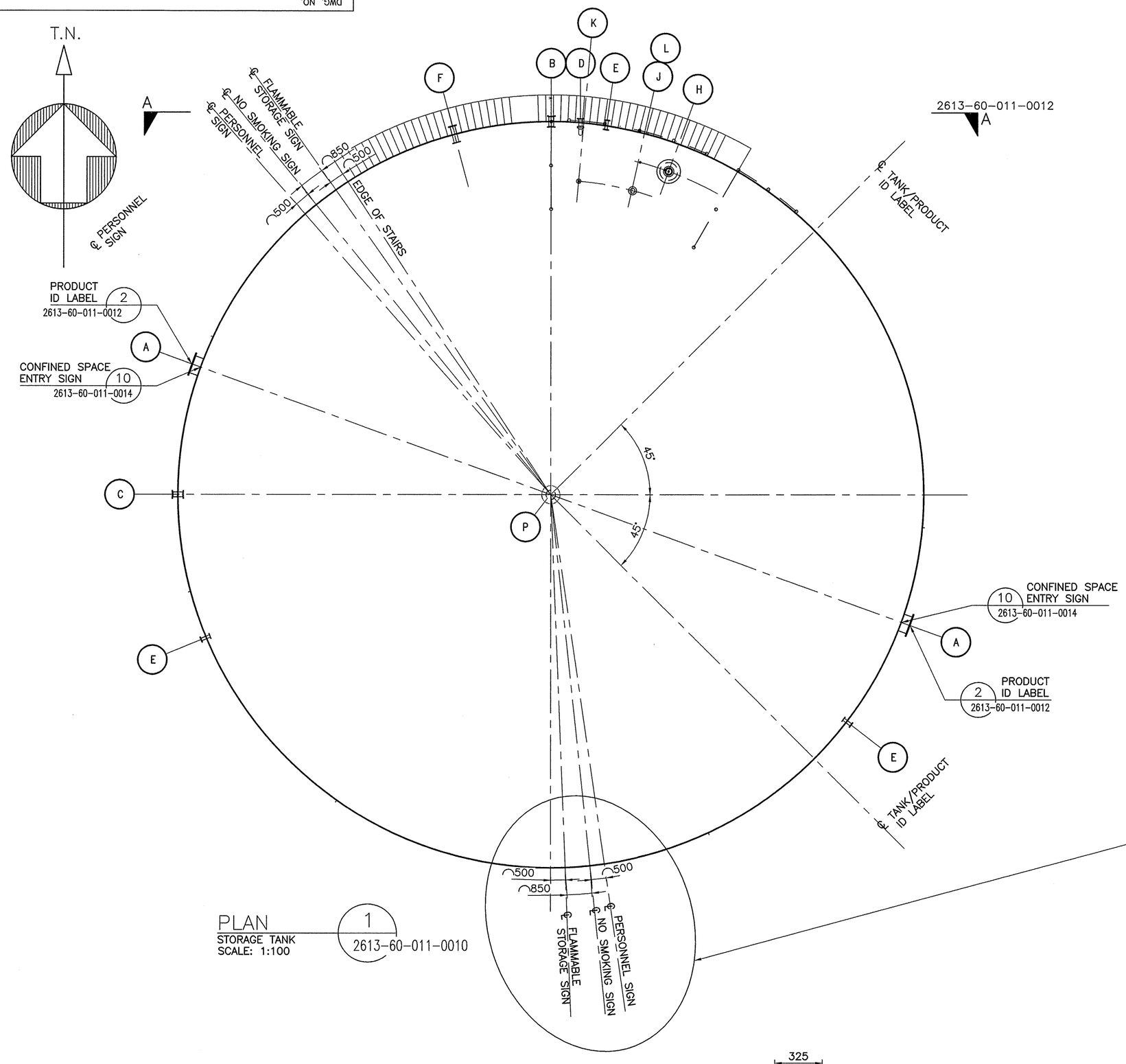

PLAN 1
STORAGE TANK
SCALE: 1:100
2613-60-011-0010

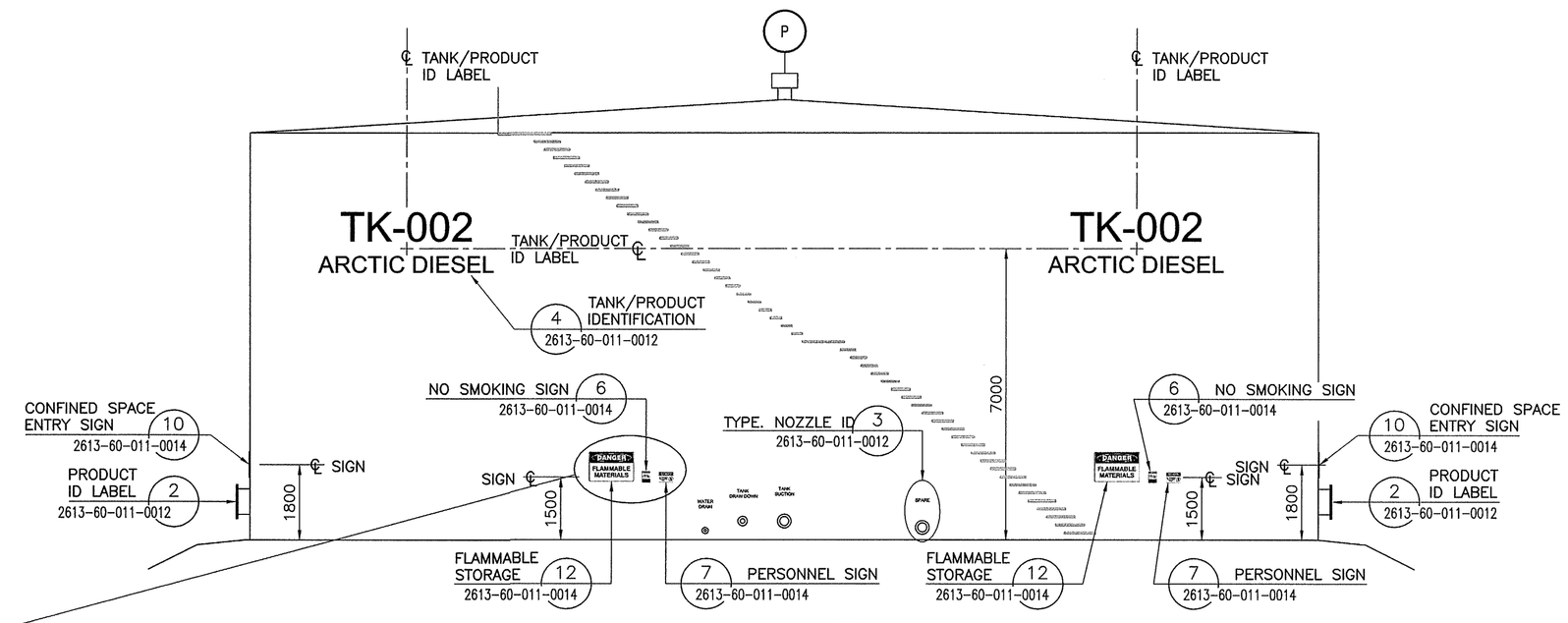

ELEVATION A
STORAGE TANK
SCALE: 1:100
2613-60-011-0012

TANK NOZZLE IDENTIFICATION CHART				
IDENTIFICATION LABEL	NOZZLE LOCATION	TEXT SIZE (MM)	TEXT COLOR	APPURTENANCE ITEM
SHELL MANWAY	SHELL	75x10	YELLOW	A
TANK SUCTION	SHELL	75x10	YELLOW	B
TANK FILL	SHELL	75x10	YELLOW	C
TANK DRAW-DOWN	SHELL	75x10	YELLOW	D
WATER DRAIN NOZZLE	SHELL	75x10	YELLOW	E
SPARE SHELL NOZZLE	SHELL	75x10	YELLOW	F
ROOF MANWAY c/w THIEF HATCH	ROOF	75x10	YELLOW	H
SPARE	ROOF	75x10	YELLOW	J
SPARE	ROOF	75x10	YELLOW	K
RADAR GAUGE	ROOF	75x10	YELLOW	L
ROOF VENT	ROOF	75x10	YELLOW	P

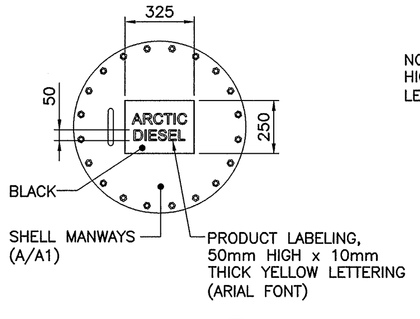

DETAIL 2
PRODUCT ID LABEL
SCALE: 1:20
2613-60-011-0012

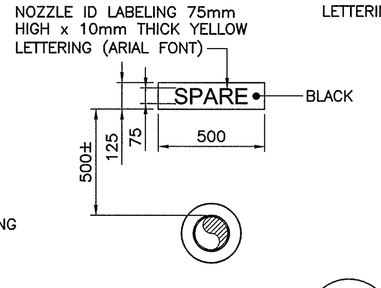

DETAIL 3
TYP. NOZZLE ID
SCALE: 1:20
2613-60-011-0012

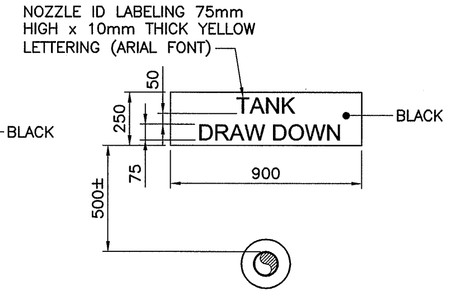

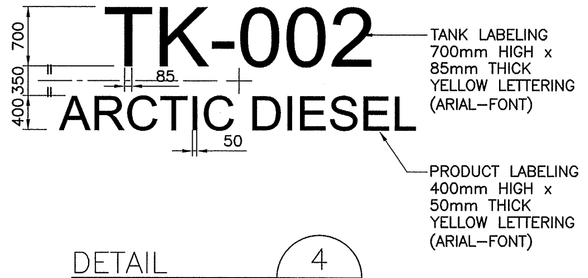

DETAIL 4
TANK/PRODUCT ID
SCALE: 1:50
2613-60-011-0012

DRAWING NO.	DRAWING TITLE
REFERENCE DRAWINGS	

THIS DRAWING WAS PREPARED FOR THE EXCLUSIVE USE OF BAFFINLAND IRON MINES CORPORATION AND HATCH PURSUANT TO THE AGREEMENT BETWEEN CLIENT AND HATCH. UNLESS OTHERWISE AGREED IN WRITING WITH CLIENT, OR SPECIFIED ON THIS DRAWING, CLIENT MAKES NO RELIANCE AND DISCLAIMS ANY AND ALL LIABILITY OR RESPONSIBILITY ARISING FROM ANY USE, ANY MODIFICATION OR REPRODUCTION OF THIS DRAWING BY ANY THIRD PARTY, (a) THIS DRAWING IS CONFIDENTIAL, AND ALL INTELLECTUAL PROPERTY RIGHTS EMBODIED OR REFERENCED IN THIS DRAWING REMAIN THE PROPERTY OF HATCH.

NO.	DESCRIPTION	BY	CHK'D	APP'D	DATE
REVISIONS					

REGISTERED PROFESSIONAL ENGINEER
H.E. BUTTS
LICENSED
NT/NU

REV.	ISSUE FOR	AUTH.	BY	DATE
0	ISSUED FOR CONSTRUCTION	DS	PB	13-07-23
ISSUE AUTHORIZATION				

HATCH™

DESIGNED BY D. STEPHENSON DATE 13-07-05	DRAWN BY B. BROPHY DATE 13-07-05
CHECKED BY DATE 13-07-23	DISCIP. ENGR. DATE 13-07-23
PROJ. DES. COORD. T. THERTELL DATE 13-07-23	PROJ. ENGR. J. CLELAND DATE 13-07-23
PROJ. MGR. S. PERRY DATE 13-07-23	

Baffinland

MARY RIVER PROJECT

MILNE INLET
FUEL SYSTEM UPGRADE
TK-002 TANK SIGNAGE

SCALE 1:100 OR AS NOTED | DWG. NO. H349000-2613-60-011-0012 | REV. 0

ORIGINAL SHEET SIZE: ISO A1 (841 x 594)

$TIME$
$FILE$
$DATE$
$USERNAME$