DWG. NO. H349000-2613-60-012-0010

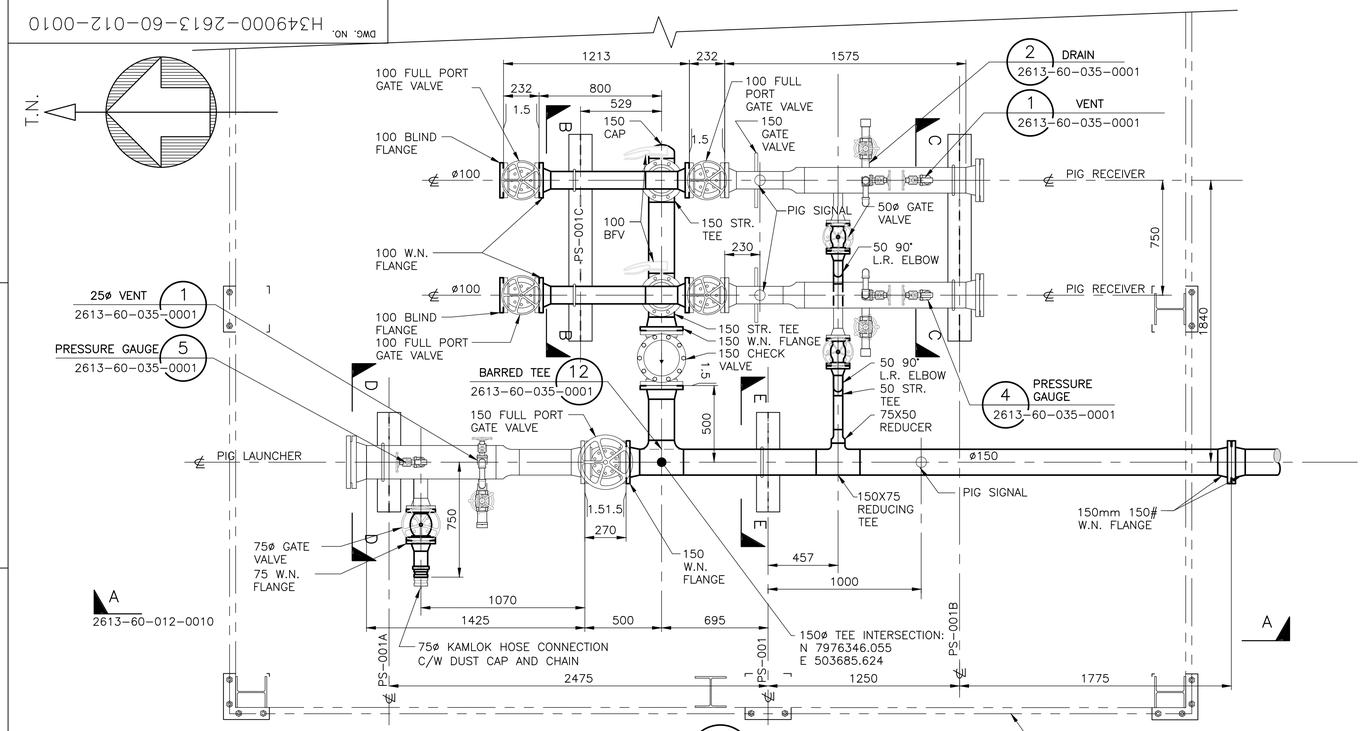

PLAN 1 2613-60-042-0001

1 MARINE MANIFOLD BUILDING 2613-60-035-0004

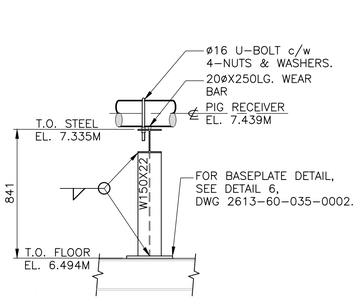

ELEVATION

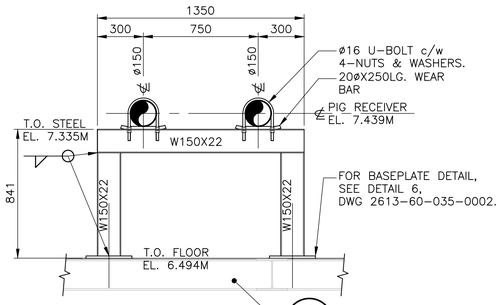

1 BUILDING FLR. FRAMING 2613-60-035-0004

VIEW C PS-001C 2613-60-012-0012

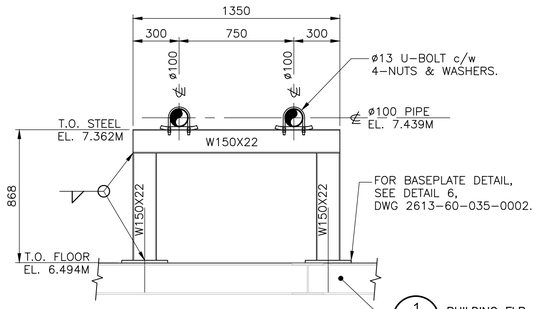

1 BUILDING FLR. FRAMING 2613-60-035-0004

VIEW B PS-001B 2613-60-012-0012

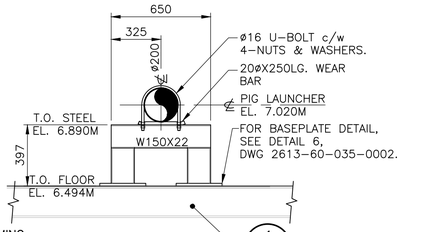

1 BUILDING FLR. FRAMING 2613-60-035-0004

VIEW D PS-001A 2613-60-012-0012

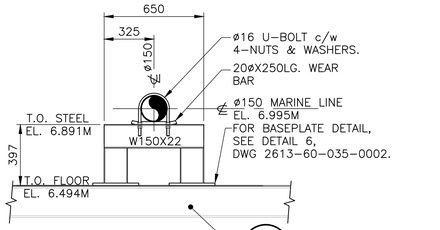

1 BUILDING FLR. FRAMING 2613-60-035-0004

VIEW E PS-001 2613-60-012-0012

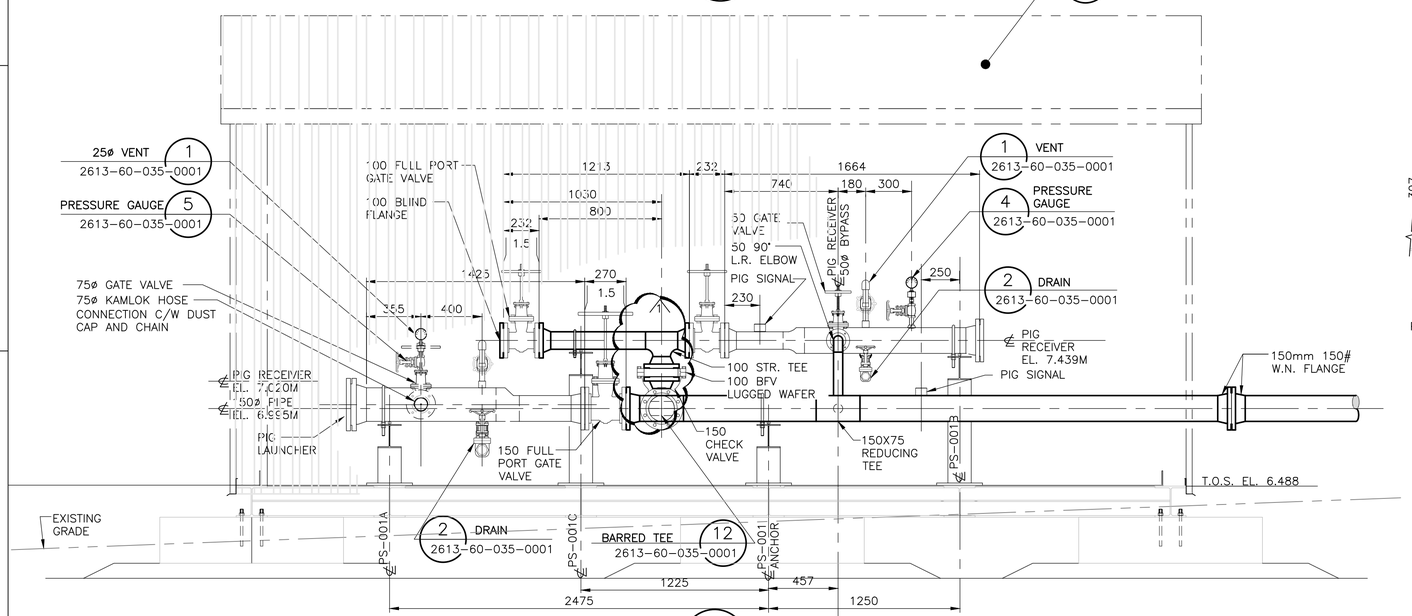

SECTION A 2613-60-042-0001

DRAWING NO.	DRAWING TITLE
REFERENCE DRAWINGS	

THIS DRAWING WAS PREPARED FOR THE EXCLUSIVE USE OF BAFFINLAND IRON CORPORATION ("CLIENT") AND IS ISSUED PURSUANT TO THE AGREEMENT BETWEEN CLIENT AND HATCH LTD. ("HATCH"). UNLESS OTHERWISE AGREED IN WRITING WITH CLIENT, OR SPECIFIED ON THIS DRAWING, (A) HATCH DISCLAIMS ANY RESPONSIBILITY FOR USE OF ANY AND ALL DRAWING AND INFORMATION DERIVED FROM ANY USE OF ANY AND ALL RELIANCE ON THIS DRAWING BY ANY THIRD PARTY OR ANY MODIFICATION OR MISUSE OF THIS DRAWING BY CLIENT, AND (B) THIS DRAWING IS CONFIDENTIAL AND ALL INTELLECTUAL PROPERTY RIGHTS EMBODIED OR REFERENCED IN THE DRAWING REMAIN THE PROPERTY OF HATCH.

NO.	DESCRIPTION	BY	CHK'D	APP'D	DATE
1	150mm CROSSOVER REDUCED TO 100mm				13-06-07
	150mm GATE VALVE REMOVED AND 100mm				
	BUTTERFLY VALVE ADDED, SUPPORT DETAILS ADDED				

REVISIONS

REGISTERED PROFESSIONAL ENGINEER — R.E. BUTTS — LICENSEE — Sept. 10th 2004 — NT/NU

REV.	ISSUE FOR	AUTH. BY		DATE
1	I.F.C. ISSUED TO CONTRACTOR	EK	EB	13-06-07
0	ISSUED FOR CONSTRUCTION			13-04-26

ISSUE AUTHORIZATION

HATCH

DESIGNED BY W.SWEET DATE 13-03-28	DRAWN BY M. PETERSON DATE 13-03-28
CHECKED BY DATE 13-04-26	DISCIP. ENGR. DATE 13-04-26
PROJ. DES. COORD. T. THERTELL DATE 13-04-26	PROJ. ENGR. J. CLELAND DATE 13-04-26
PROJ. MGR. S. PERRY DATE 13-04-26	

Baffinland IRON MINES CORPORATION

MARY RIVER PROJECT

MILNE INLET

MARINE MANIFOLD PLAN & SECTIONS

SCALE 1:20 OR AS NOTED

DWG. NO. H349000-2613-60-012-0010

REV. 1

$$DATAENTRY$$