DWG. NO. H349000-4613-10-035-0003

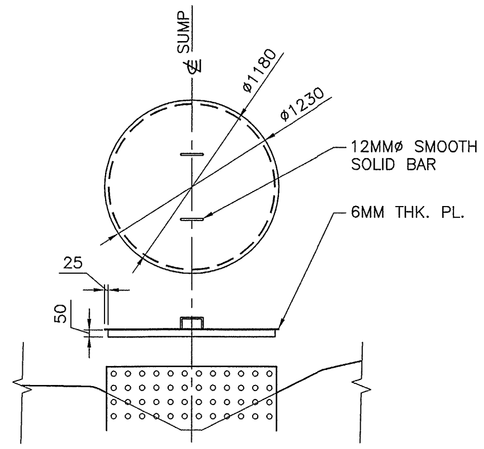

DETAIL–1
DYKE SUMP COVER

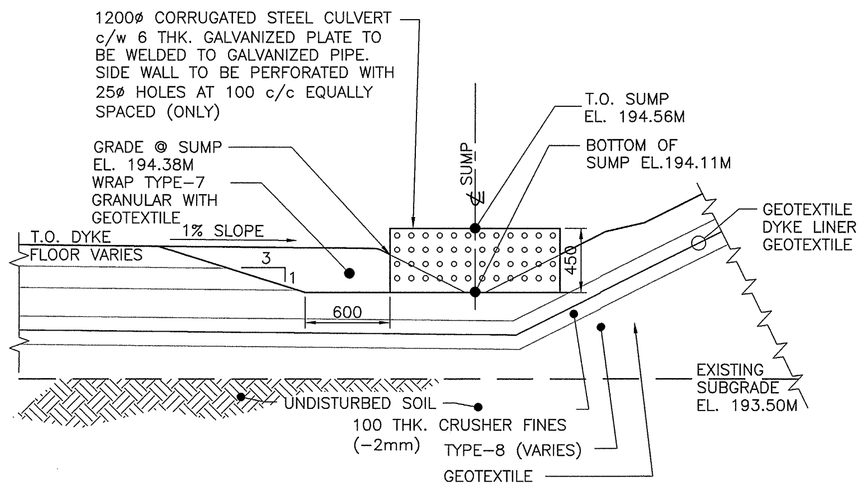

DETAIL–1
DYKE SUMP CONSTRUCTION
REFER H349000–4613–10–014–0002

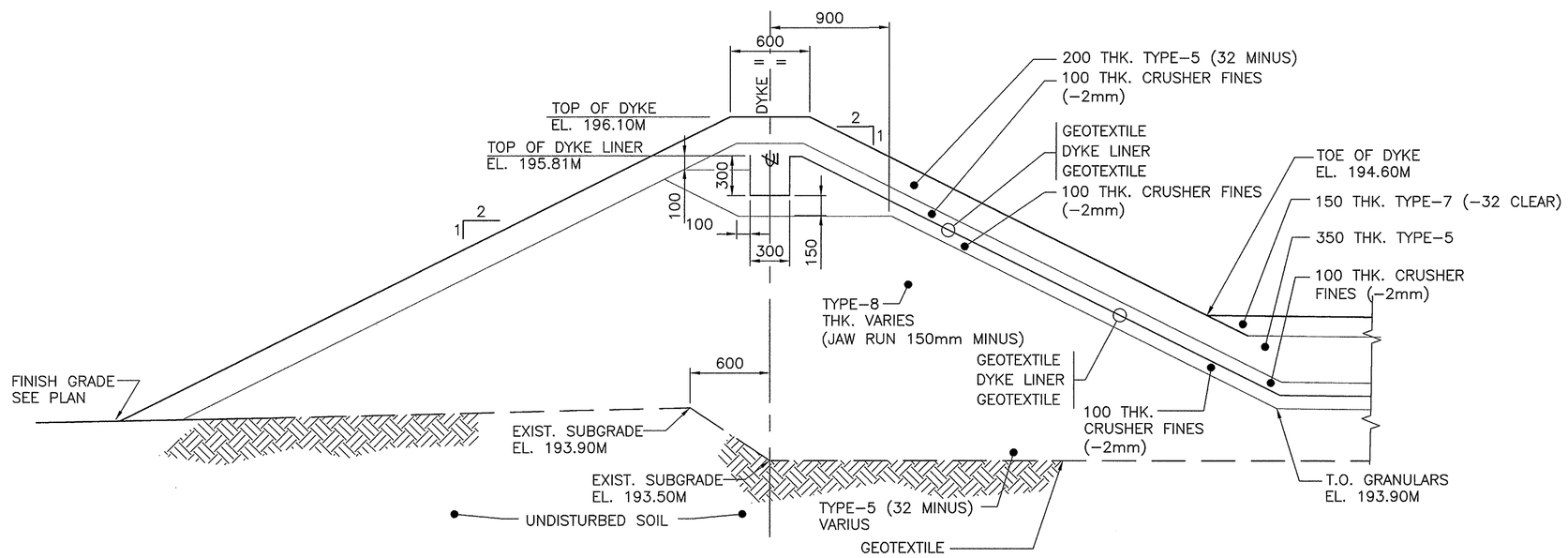

DETAIL–2
DYKE CONSTRUCTION
REFER H349000–4613–035–0001

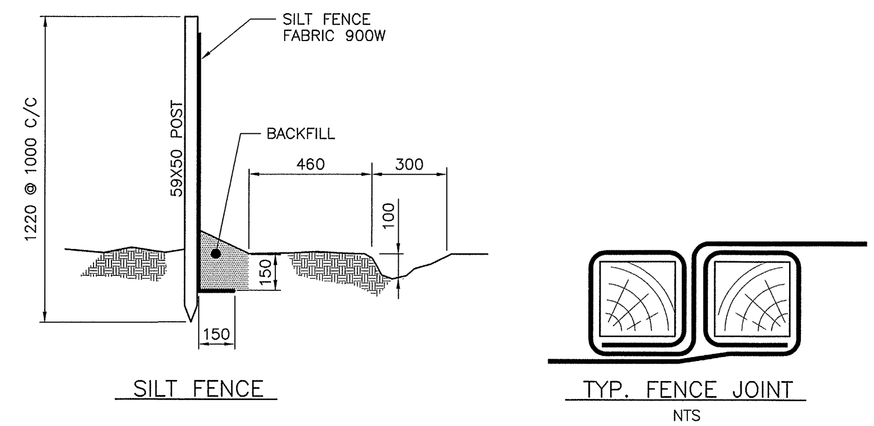

TEMPORARY SILT FENCE
DURING CONSTRUCTION
SCALE: 1:20

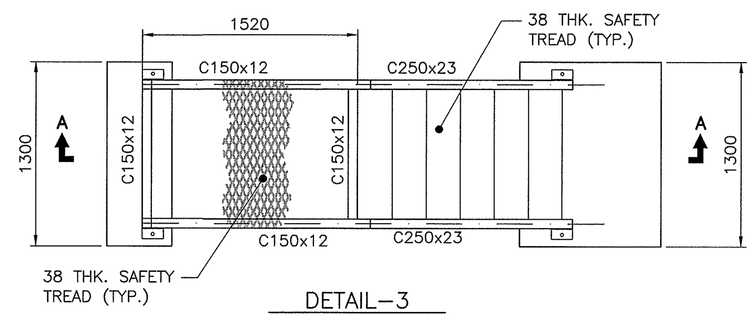

DETAIL–3
DYKE ACCESS STAIRS
REFER H349000–4613–10–014–0002
H349000–4613–60–042–0001

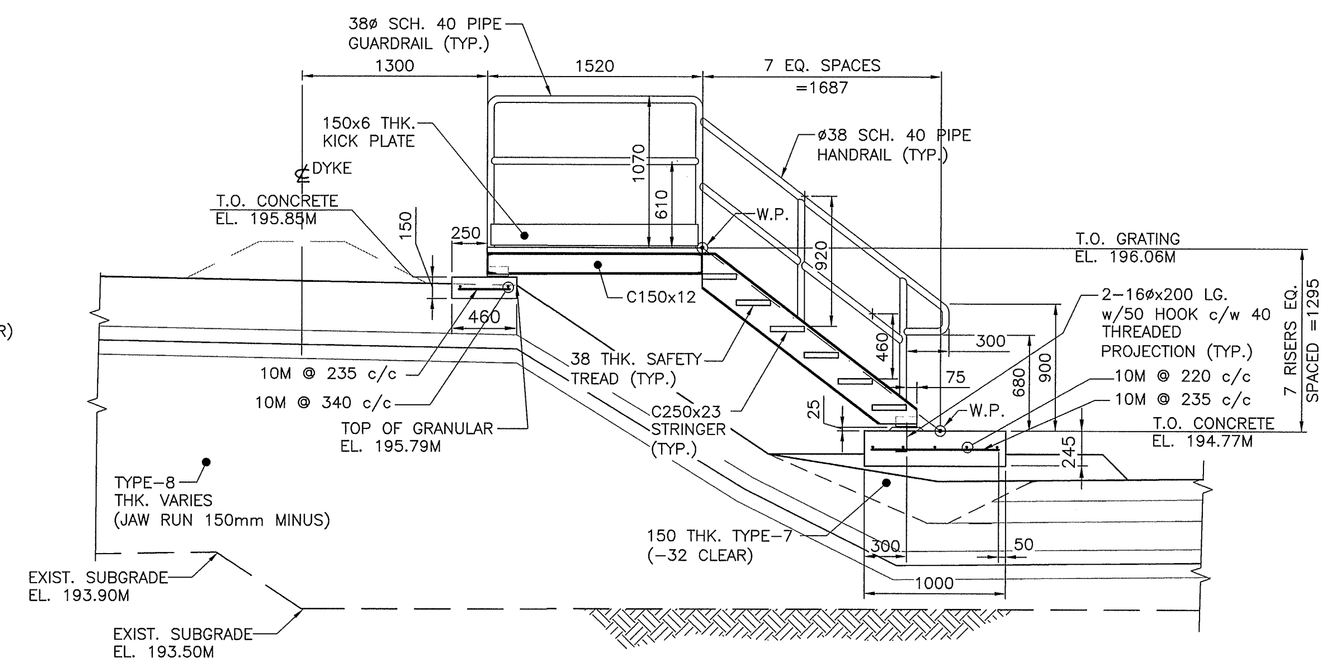

SECTION–A
DYKE ACCESS STAIRS

DRAWING NO.	DRAWING TITLE

REFERENCE DRAWINGS

THIS DRAWING WAS PREPARED FOR THE EXCLUSIVE USE OF BAFFINLAND IRON CORPORATION ("CLIENT") AND IS ISSUED PURSUANT TO THE AGREEMENT BETWEEN CLIENT AND HATCH LTD ("CONTRACT"). UNLESS OTHERWISE EXPRESSLY AGREED IN WRITING WITH THE PROFESSIONAL ENGINEER, HATCH LTD. ACCEPTS NO RESPONSIBILITY, DAMAGES, OR LIABILITY, OR RESPONSIBILITY FOR DAMAGES, AND DISCLAIMS ALL LIABILITY, OR RESPONSIBILITY FOR DAMAGES AND DISCLAIMS ALL RELIANCE ON THIS DRAWING BY ANY THIRD PARTY OR ANY MODIFICATION OR MISUSE OF THIS DRAWING BY CLIENT AND (B) THIS DRAWING IS CONFIDENTIAL AND ALL INTELLECTUAL PROPERTY RIGHTS, INCLUDING COPYRIGHT, IN THIS DRAWING REMAIN THE PROPERTY OF HATCH.

NO.	DESCRIPTION	BY	CHK'D	APP'D	DATE

REVISIONS

REGISTERED PROFESSIONAL ENGINEER
F.E. BUTTS
LICENSEE
NT/NU

REV.	ISSUE FOR	AUTH.	BY	DATE
0	ISSUED FOR CONSTRUCTION	DS	FB	13–07–23
B	INTERNAL/CLIENT REVIEW	DS	FB	13–07–12
A	PRELIMINARY_STATUS	DS	FB	13–06–06

ISSUE AUTHORIZATION

HATCH™

DESIGNED BY D. STEPHENSON DATE 13–03–18	DRAWN BY M. PETERSON DATE 13–03–18
CHECKED BY DATE 13–07–12	DISCIP. ENGR. DATE 13–07–12
PROJ. DES. COORD. T. THERTELL DATE 13–07–22	PROJ. ENGR. J. CLELAND DATE 13–07–22
PROJ. MGR. S. PERRY DATE 13–07–22	

Baffinland

MARY RIVER PROJECT

MINE SITE
DYKE SECTIONS AND DETAILS

SCALE 1:30 OR AS NOTED

DWG. NO. H349000–4613–10–035–0003

REV. 0

ORIGINAL SHEET SIZE: ISO A1 (841 x 594)

$FILE$
$DATE$
$USERNAME$
$TIME$