17 August 2018

Karén Kharatyan
Director of Technical Services, NWB
P.O. Box 119
Gjoa Haven, NU X0B 1J0

RE: Notification of Planned Construction Work
Milne Port 15 ML Arctic Diesel Tank
Mary River Project - Type 'A' Water Licence - 2AM-MRY1325 - Amend. No. 1

Baffinland Iron Mines Corporation (Baffinland) is pleased to submit final design and for-construction drawings for planned construction work at the Mary River Project (the Project) to the Nunavut Water Board (NWB) for their review and files. The planned construction work includes one Arctic diesel fuel tank with a 15,000,000 L capacity to be constructed at the Milne Port Site. This letter provides notice to the NWB that Baffinland intends to begin construction work within 60 days of this submission. As discussed with the NWB, Baffinland intends to commence construction **on or before August 18, 2018**. This construction timeframe is critical to ensure the facility and associated tank are completed and installed in advance of the last fuel re-supply shipment of the season, with time to allow for filling of the tank.

Baffinland has reviewed NuPPAA and determined that the Nunavut Impact Review Board (NIRB) approval is not required for construction of the tank alone. Baffinland intends to construct the tank, but is committed to not filling it until approval for the volume increase, included with the production increase proposal, in front of NIRB at this time.

Further Baffinland would like to note that it was confirmed that the Milne Port tank containment area has sufficient capacity for the 15 ML tank within submissions approved under **Motion No. 2017-10-02**, on September 14, 2017; NPC has determined that all activities included in the Production increase proposal are in conformity with the North Baffin Regional Land Use Plan; securities have been posted with the Qikiqtani Inuit Association (QIA) in 2017 for the fuel storage activities at Milne Port and the placement of the tank is on Inuit Owned Land (IOL). Further, in keeping with the Licence's terms and conditions, the submission of post-construction information, including as-built plans and drawings, remain applicable to this structure.

Baffinland has reviewed relevant management plans associated with fuel storage at the Project. No significant updates will be required to any management plans as a result of this planned work, however general updates to site layout drawings and fuel volumes presented in Baffinland's Spill Contingency Plan (BAF-PH1-830-P16-0036) will be required and included in the NWB Annual Report.

Calculation sheets showing that the fuel storage area has sufficient capacity for the 15 ML Arctic diesel fuel tank are included in Attachment 1. The following for-construction drawings are included in Attachment 2:

Drawing No.	Drawing Title
H353004-40000-220-260-0003-0001	Milne Port Fuel Tanks 003, 010 & 011 Setting Out Earthworks
H353004-40000-220-273-0001-0001	Milne Port Fuel Tanks 003, 010 & 011 Details Typical Sections
H353004-48000-210-282-0001-0001	Port Site TM001 Fuel System Process Flow Diagram
H353004-48000-210-282-0002	Port Site TM001 Fuel System P&ID
H353004-48400-240-272-0001	Port Site TM001 Fuel System Overall Layout
H353004-48400-240-270-0001	Port Site 15M L Arctic Diesel Storage Tank TK-003
H353004-48400-240-272-0002	Port Site TM001 Fuel System Piping Layout
H353004-48400-240-270-0004	Port Site Typical Vertical Tank Details
H353004-48400-240-270-0005	Port Site TK-003 Inlet Piping Plan & Section
H353004-48400-240-270-0006	Port Site TK-003 Outlet Piping Plan & Section
H353004-48400-240-270-0009	Port Site Miscellaneous Details

Baffinland will prepare a Construction Summary Report within 90 days following completion of this work, in accordance with Part D, Item 17 of the Type A Water Licence. The Construction Summary Report will include the information specified in Schedule D of the licence.

We trust that this information meets the requirements under Part D of Baffinland's Type A Water Licence.

Regards,

Christopher Murray
Environmental & Regulatory Compliance Manager

Attachments:
Attachment 1: Mine Site Fuel System Design Brief
Attachment 2: For-Construction Drawings

Cc:
Assol Kubeisinova (Nunavut Water Board)
Fai Ndofor, Sean Joseph (Qikiqtani Inuit Association)
Ian Parsons, Bridget Campbell, Sarah Forté (Crown-Indigenous Relations and Northern Affairs Canada)
Solomon Amuno (Nunavut Impact Review Board)
Grant Goddard, Megan-Lord Hoyle, Timothy Ray Sewell (Baffinland)

Attachment No. 1

Calculation Sheets – Milne Port Fuel Storage Facility

Baffinland HATCH

Calculation Cover Sheet

Client: Baffinland Iron Mines LP

Project Title: Mary River Project

Discipline: Mechanical

Calculation No.: **File No:** **Number of Sheets:** 7

Description:

The Mary River tank farm located on Baffin Island will be modified to include the installation of one 15 ML Marine Diesel Tank, one 3ML Marine Diesel Tank and one 750,000l Jet Fuel tank. The attached calculations provide the volume required by code, and the approximate available volume within the dyke.

Category of calculation verification required *tick box* ☑ 1 ☐ 2 ☐ 3 ☐ 4

Prepared by: Michael Doodeman **Date:** 22 June 2017

Print Name > (Responsible Engineer)

Preliminary Review by: James Cleland **Date:** 22 June 2017

Print Name >

Can the calculation now be released for work? ☑ Yes ☐ No **To the Client?** ☑ Yes ☐ No

Checked by: by: **Date:**

Print Name >

Reviewed by: M. MacIntyre **Date:** 27 June 2017

Print Name > Michael MacIntyre

Approved by: **Date:** 27 June 2017

Print Name > Floyd Butts

General Notes:

The referenced 3d model (Baffinlands_Dyke_Storage_17_06_27.dwg) was utilized to establish overall available dyke volume based on As-Built data. The available dyke volume is 4.73 % greater than code requirements.
Required Liquid Volume: 20,461m3
Actual Dyke Liquid Volume: 21,476m3

Revisions

Rev.	Date	Prepared by	Checked by	Approved by	Description

Superseded by Calculation No. **Date:**

Reason voided:

© Hatch 2017 All rights reserved, including all rights relating to the use of this document or its contents.

Milne Port Dyke Calculations to NFC Requirements

11 Tank Combined Dyke (two tier)	**353004**	**Earth Dyke**
Tanks 4, 5 & 6 Diameter (3 Tanks)	31.80	m
Tanks 4, 5 & 6 Height	15.3	m
Tanks 3 Diameter (1 Tank)	32.65	m
Tanks 3 Height	18.15	
Tanks 1 & 2 Diameter (2 Tanks)	25.6	m
Tanks 1 & 2 Height	9.76	m
Tanks 7, 8, 9 & 10 Diameter (4 Tanks)	10.25	
Tanks 7, 8, 9 &10 Height	9.14	
Tanks 11 Diameter (1 Tank)	16.25	
Tanks 11 Height	15.10	
Tanks 4, 5 & 6 Capacity	12,151,658	Litre
Tank 3 Capacity	15,196,126	
Tanks 1 & 2 Capacity	5,023,653	Litre
Tanks 7, 8, 9 & 10 Capacity	754,195	
Tanks 11 Capacity	3,131,652	
Total Tank Volume	67,846,841	Litre
Tank Volume	67,847	m^3
Required Volume	20,461	m^3
Number of Tanks	11	
Dyke - Overall Height	1.7	m
Dyke - Crest Width	0.6	m
Max Liquid Height	1.400	m
Freeboard	0	m

Useable volume from 3D Model	21,476 m3	
Difference	1,014.803	4.73%
	1,015	

Pad Containment Volume (m^3)							
Zone / Area	**Dimension**	**Length of Zone**	**Width of Zone**	**Elevation**	**Height**	**Volume**	**Notes & Assumptions**
Blue Zone	Top of Dyke	125.20	141.10	12.35	1.55	26,597.37	****Used dyke liner elevation as top. Elevation change along width of pad ignored for conservative estimate. Floor length is measured from edge of the dyke at the top of the 350 THK Type 5 fill.**
	Toe/Floor of Dyke	120.20	138.60	10.80			
Green Zone	Top of Dyke	125.20	49.10	12.35	0.80	4,855.50	****Volume found by using cross section trapezoidal area across the zones.**
	Toe/Floor of Dyke	123.80	48.40	11.55			

Tank Pedestal Volume & Tank Volume (Below Top of Dyke) m^3								
Tank	**Tank # / Zone**	**Dimension**	**Radius**	**Height**	**Quantity**	**Unit Volume**	**Volume**	**Notes & Assumptions**
750000 L	**TK 7,8 - Blue**	Top/Inner Radius	7.16	0.95	2.00	197.00	394.00	****No 150 THK Type 7 Fill as floor of pedestal.** ****Truncated cone volume used i.e trapezoidal cross section assumed.**
		Floor/Outer Radius	9.06					
	Tank Volume	Constant Radius	5.16	0.60	2.00	50.11	100.22	
	TK 9,10 - Blue	Top/Inner Radius	7.16	1.50	2.00	356.62	713.23	**** Constant floor elevations assumed for each pedestal; if the height of the pad is greater than the dyke liner height, the dyke liner height governs for height/volume calculation.** **** Tank Pad Perimeter Elevation used as constant top height of truncated cone. Top radius includes distance to pad perimeter until meeting slope from base.**
		Floor/Outer Radius	10.16					
	Tank Volume	Constant Radius	5.16	0.05	2.00	4.18	8.35	
3 ML	**TK 11 - Blue**	Top/Inner Radius	10.10	1.15	1.00	458.84	458.84	
		Floor/Outer Radius	12.40					
	Tank Volume	Constant Radius	8.10	0.40	4.00	82.45	329.79	
5 ML	**TK 1,2 - Green**	Top/Inner Radius	14.01	0.80	1.00	555.66	555.66	
		Floor/Outer Radius	15.71					
	Tank Volume	Constant Radius	12.80					
12 ML	**TK 4 - Blue**	Top/Inner Radius	18.00	1.45	1.00	1,726.48	1,726.48	
		Floor/Outer Radius	20.90					
	Tank Volume	Constant Radius	16.00	0.10	1.00	80.42	80.42	
	TK 5,6 - Blue	Top/Inner Radius	18.00	1.15	2.00	1,326.50	2,653.00	
		Floor/Outer Radius	20.30					
	Tank Volume	Constant Radius	16.00	0.40	2.00	321.70	643.40	
15 ML	**TK 3 - Blue**	Top/Inner Radius	18.25	1.55	1.00	1,952.76	1,952.76	
		Floor/Outer Radius	21.75					
	Tank Volume	Constant Radius	16.25					

Other Volumes (m^3)			
Zone / Area	**Dimension**	**Volume**	**Notes & Assumptions**
Access Ramp	**Whole Ramp**	**418.93**	****See attatched hand calculation for details & assumptions. Note this calculation is very rough, likely within 20% of actual value (doesn't take into account overlapping volume with dyke i.e conservative estimate)**

Diesel Volume (L)	Diesel Volume w/o 15ML (biggest tank)	Minimum Volume Needed	**Spill Volume Available**	
			m^3	**L**
67,000,000.00	52,000,000.00	20,200,000.00	**21,417.78**	**21,417,782.47**

Spill Volume Available > Minimum Volume Needed

Pad Containment Volume (m^3)							
Zone / Area	Dimension	Length of Zone	Width of Zone	Elevation	Height	Volume	Notes & Assumptions
Blue Zone	Top of Dyke	125.20	141.10	12.35	1.55	26,597.37	**Used dyke liner elevation as top. Elevation change along width of pad ignored for conservative estimate. Floor length is measured from edge of the dyke at the top of the 350 THK Type 5 fill.
	Toe/Floor of Dyke	120.20	138.60	10.80			
Green Zone	Top of Dyke	125.20	49.10	12.35	0.80	4,855.50	**Volume found by using cross section trapezoidal area across the zones.
	Toe/Floor of Dyke	123.80	48.40	11.55			

Tank Pedestal Volume & Tank Volume (Below Top of Dyke) m^3								
Tank	Tank # / Zone	Dimension	Radius	Height	Quantity	Unit Volume	Volume	Notes & Assumptions
750000 L	TK 7,8 - Blue	Top/Inner Radius	7.16	0.95	2.00	197.00	394.00	**No 150 THK Type 7 Fill as floor of pedestal. **Truncated cone volume used i.e trapezoidal cross section assumed.
		Floor/Outer Radius	9.06					
	Tank Volume	Constant Radius	5.16	0.60	2.00	50.11	100.22	
	TK 9,10 - Blue	Top/Inner Radius	7.16	1.50	2.00	356.62	713.23	** Constant floor elevations assumed for each pedestal; if the height of the pad is greater than the dyke liner height, the dyke liner height governs for height/volume calculation. ** Tank Pad Perimeter Elevation used as constant top height of truncated cone. Top radius includes distance to pad perimeter until meeting slope from base.
		Floor/Outer Radius	10.16					
	Tank Volume	Constant Radius	5.16	0.05	2.00	4.18	8.35	
3 ML	TK 11 - Blue	Top/Inner Radius	10.10	1.15	1.00	458.84	458.84	
		Floor/Outer Radius	12.40					
	Tank Volume	Constant Radius	8.10	0.40	4.00	82.45	329.79	
5 ML	TK 1,2 - Green	Top/Inner Radius	14.01	0.80	1.00	555.66	555.66	
		Floor/Outer Radius	15.71					
	Tank Volume	Constant Radius	12.80					
12 ML	TK 4 - Blue	Top/Inner Radius	18.00	1.45	1.00	1,726.48	1,726.48	
		Floor/Outer Radius	20.90					
	Tank Volume	Constant Radius	16.00	0.10	1.00	80.42	80.42	
	TK 5,6 - Blue	Top/Inner Radius	18.00	1.15	2.00	1,326.50	2,653.00	
		Floor/Outer Radius	20.30					
	Tank Volume	Constant Radius	16.00	0.40	2.00	321.70	643.40	
15 ML	TK 3 - Blue	Top/Inner Radius	18.25	1.55	1.00	1,952.76	1,952.76	
		Floor/Outer Radius	21.75					
	Tank Volume	Constant Radius	16.25					

Other Volumes (m^3)			
Zone / Area	Dimension	Volume	Notes & Assumptions
Access Ramp	Whole Ramp	418.93	**See attatched hand calculation for details & assumptions. Note this calculation is very rough, likely within 20% of actual value (doesn't take into account overlapping volume with dyke i.e conservative estimate)

Diesel Volume (L)	Diesel Volume w/o 15ML (biggest tank)	Minimum Volume Needed	Spill Volume Available	
			m^3	L
67,000,000.00	52,000,000.00	20,200,000.00	21,417.78	21,417,782.47

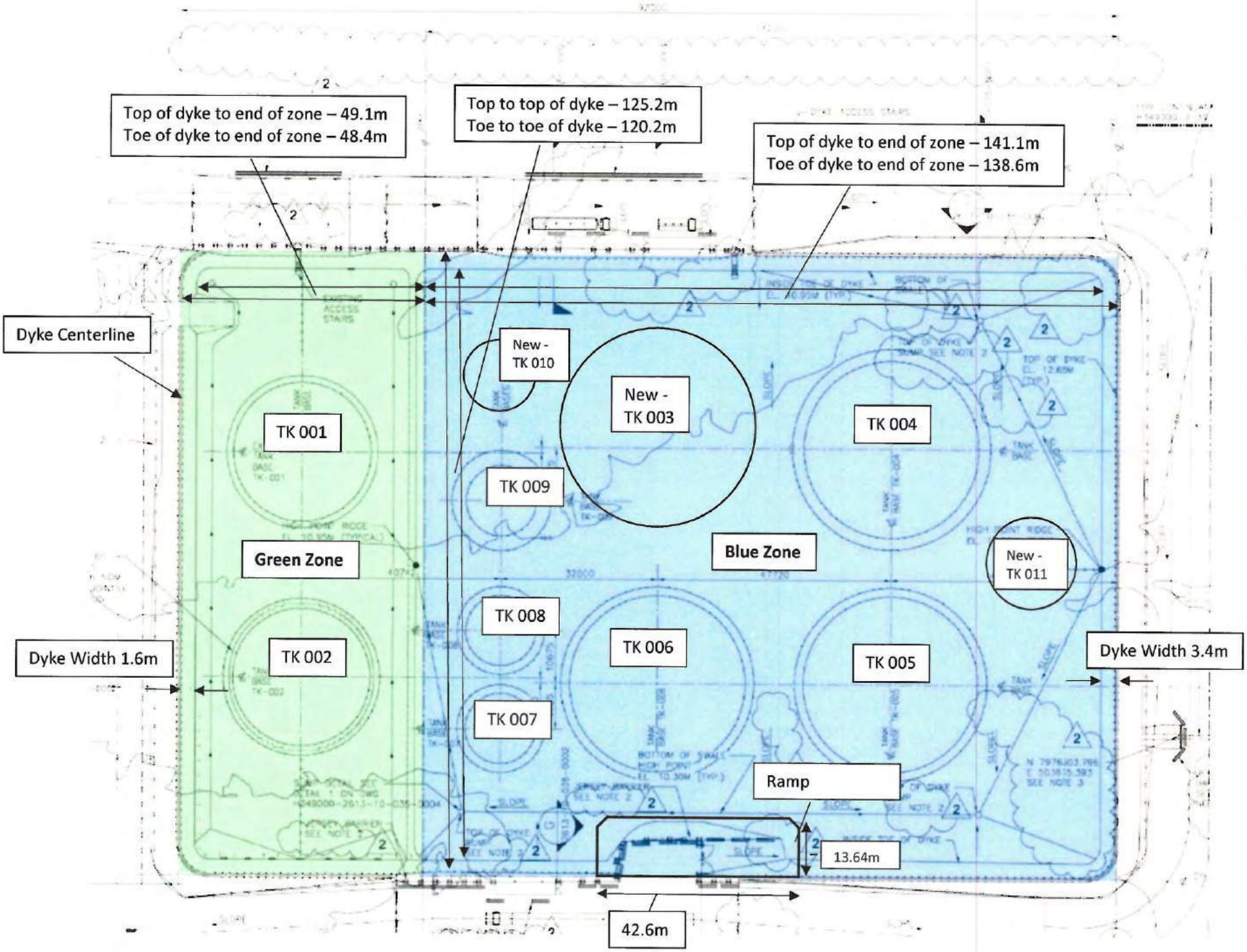
Top of dyke to end of zone – 49.1m
Toe of dyke to end of zone – 48.4m
Top to top of dyke – 125.2m
Toe to toe of dyke – 120.2m
Top of dyke to end of zone – 141.1m
Toe of dyke to end of zone – 138.6m
Dyke Centerline
New - TK 010
New - TK 003
TK 001
TK 004
TK 009
Green Zone
Blue Zone
New - TK 011
TK 008
TK 006
TK 005
TK 002
Dyke Width 1.6m
Dyke Width 3.4m
TK 007
Ramp
13.64m
42.6m

HATCH	CALCULATION SHEET	SHEET NO. 1 OF 3

DESCRIPTION	PROJECT NO	MADE BY	CHECKED BY
"Fuel Pad Containment Volume"	"H353004"	"MD" DATE	DATE

Blue / Green Zone.

1.

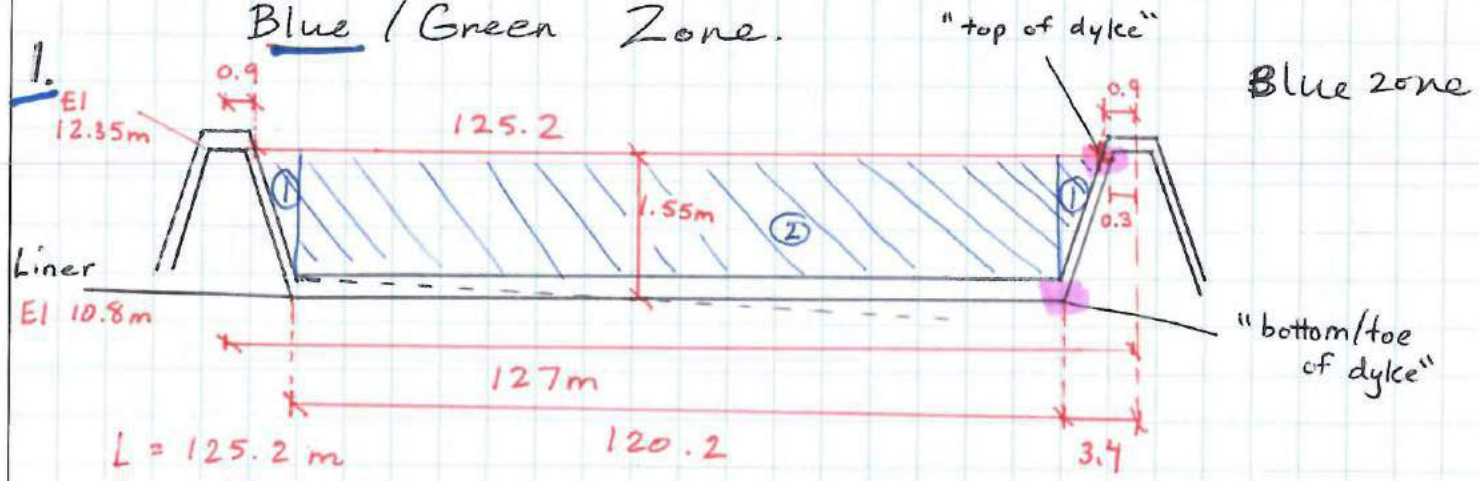

$L = 125.2\ m$

$h = 1.55m$

width top = 141.1m

width floor = 138.6m

$$V = A \times l_{avg}$$
$$= (① + ②)\, l_{avg}$$
$$= \left[\frac{1.55(125.2 - 120.2)}{2} + 120.2(1.55)\right]\left(\frac{141.1 + 138.6}{2}\right)$$
$$= 26{,}597.37\ m^3$$

2. Tank ex. (General)

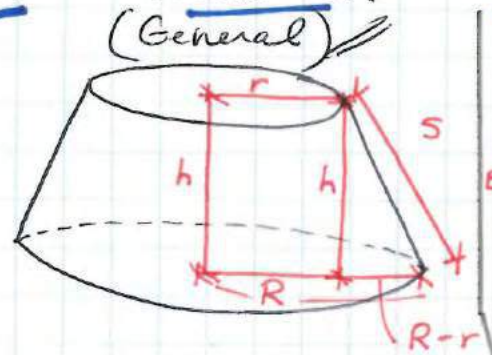

$S = \sqrt{(R-r)^2 + h^2}$

LAT S.A. $= \pi(R+r)S$

~~Fo~~

$V = \frac{\pi h}{3}\left[Rr + R^2 + r^2\right]$

2a. 5ML Pedestal

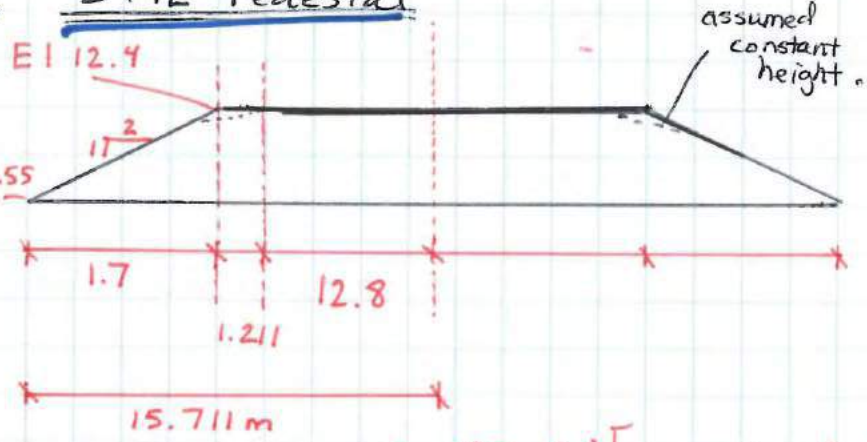

$R = 15.711m$

$r = 14.01m$

Since El > 12.35

use 12.35 as top elevation

& 11.55 as floor elevation

$\therefore h = 0.8$

$$\Rightarrow V = \frac{\pi(0.8)}{3}\left[(15.711)(14.01) + 15.711^2 + 14.01^2\right]$$
$$= 555.62\ m^3$$

HATCH	CALCULATION SHEET	SHEET NO. 2 OF 3

DESCRIPTION	PROJECT NO	MADE BY	CHECKED BY
" "	" "	" " DATE	DATE

2b 3-12 ML (TK 4,5,6)

EI 11.95 (TK 4, EL 12.25) 1:3

EL 10.8

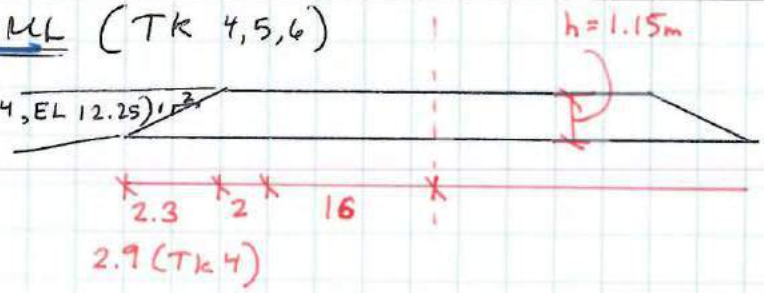

R = 20.3
r = 18

R = 20.90
r = 18

2c ~~4~~ x750 kL

(Tk 7,8)

EI 11.75

EI 10.80 1:3

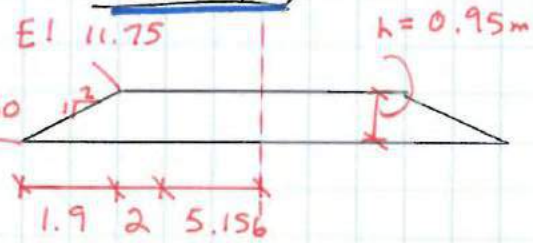

R = 9.056m
r = 7.156m

(TK 9,10)

EI: 12.30

EI: 10.80 1:2

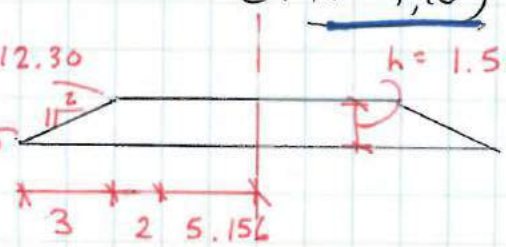

R = 10.156 m
r = 7.156 m

2d 3ML

EI: 11.95

EI: 10.80 assumed

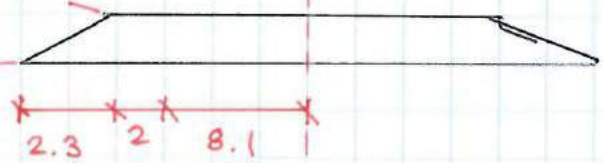

R = 10.1 m
r = 12.4 m

2e 15 ML

EI: 12.55 assumed

EI: 10.80 assumed

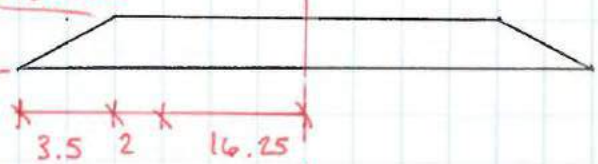

R = 21.75m
r = 18.25m

HATCH	CALCULATION SHEET	SHEET NO. 3 OF 3
DESCRIPTION " "	PROJECT NO " "	MADE BY " " DATE
		CHECKED BY DATE

3 Ramp

Top View Approximated

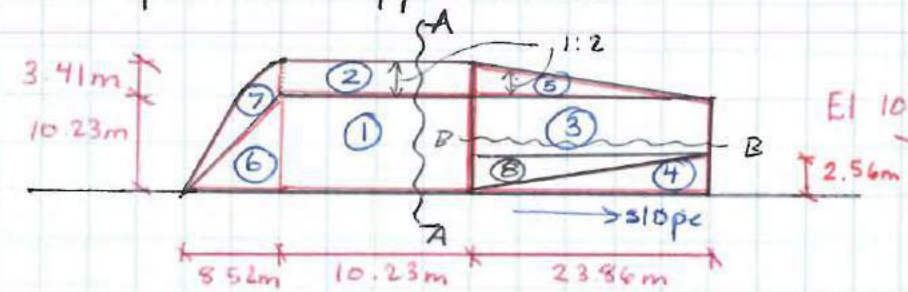

Section A-A:

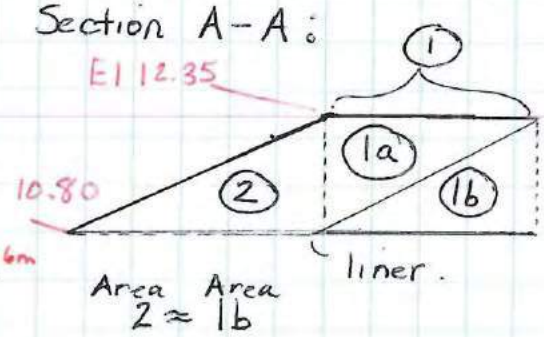

* Since (1b) already calculated with dyke volume consideration & since (2) ≈ (1b) ∴ total volume of (1) & (2) can be approximated by (1a) + (1b)

Volume (1) & (2)

$$V = 10.23m(10.23m)(12.35-10.8) = 162.21m^3.$$

* Assume (4) is at top elevation ∵ ~~(4) ≈ (5)~~ ∴ let's assume full height (4) ≈ (4) + (8) + (5)

~~Slope~~ = B : B

Volume (4), (5), (8)

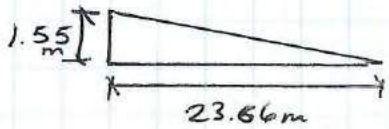

$$V = \left[\frac{1}{2}(23.86)(2.56)\right]1.55 = 47.34m^3.$$

Total Volume $= \sum_{i=1}^{8} V_i = 418.93\,m^3.$

Volume (3) using section B : B :

$$V = \frac{1}{2}(1.55)(23.86)(10.23-2.56) = 141.83\,m^3$$

Volume (6) & (7) Since overestimate used for 4, 5, 8, neglect (7).

so (6):

$$V = \frac{1}{2}(8.52)(10.23)(1.55) = 67.55m^3.$$

Attachment 2

For-Construction Drawings

DWG. No. H353004-40000-220-260-0003-0001

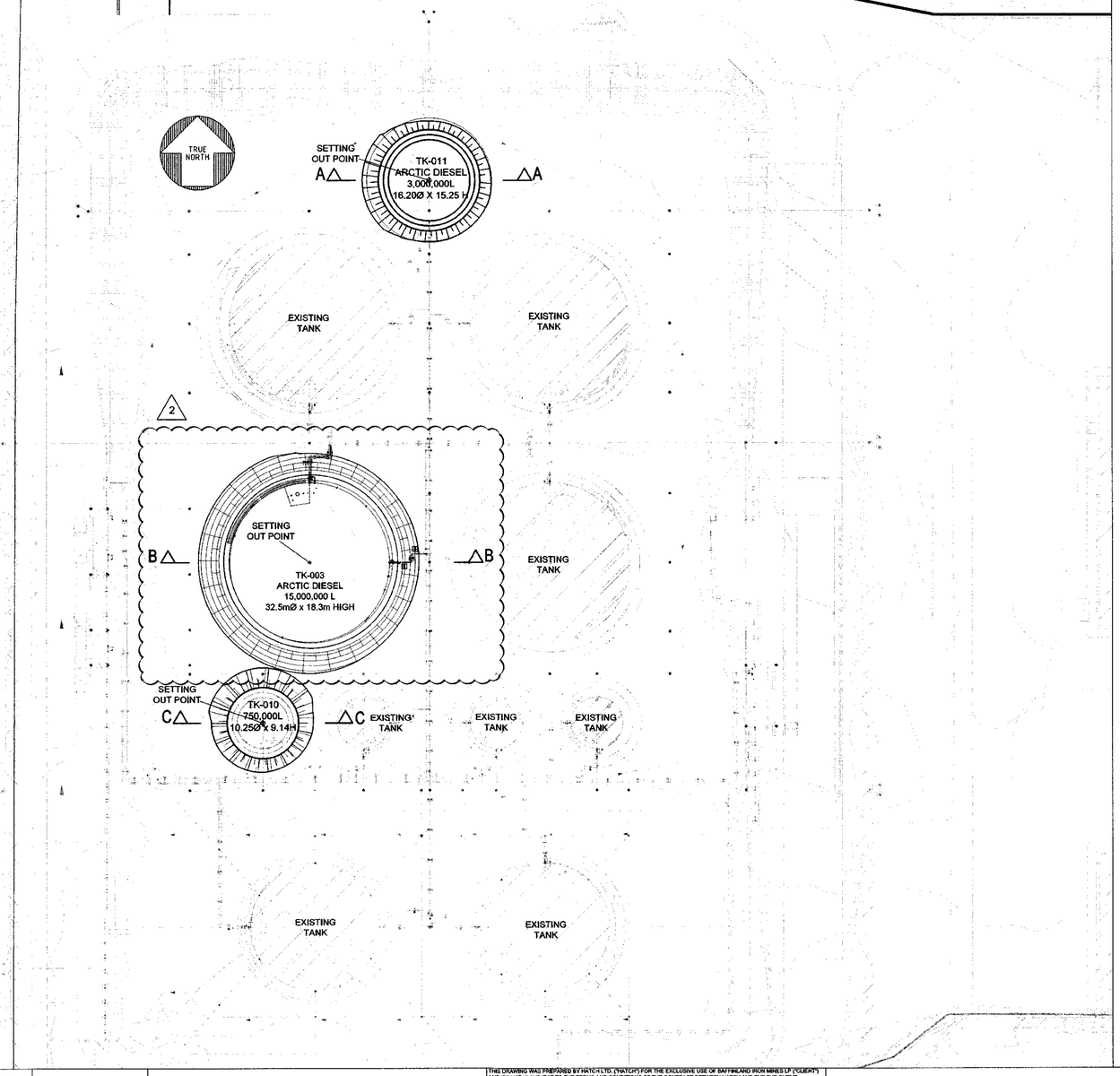

MATERIAL VOLUMES:

CRUSHER FINES MATERIAL (-2mm)	= 160m3
FILL MATERIAL (TYPE 5)	= 3822m3
TOTAL FILL MATERIAL REQUIRED	= 3982m3
TOTAL SURFACE AREA	= 2490m2

TANK EARTHWORKS SETTING OUT POINT (CENTRE OF TANK)

TANK No.	N	E	TANK PERIMETER LEVEL (EL)
TANK 011	7976273.168	503641.393	11.95
TANK 003	7976196.948	503617.533	12.55
TANK 010	7976164.948	503608.208	12.30

2

NOTES:

1. LIDAR SURVEY PROVIDED BY PHOTSAT (2016)
2. COORDINATE GRID IS SHOWN IN UTM (NAD83) ZONE 17 AND IS IN METERS.
3. CONTOURS ARE IN METERS. CONTOUR INTERVAL IS 0.5m.
4. FOR TYPICAL CROSS SECTIONS REFER TO DRAWING No. H353004-40000-220-273-0001-0001

REGISTERED PROFESSIONAL ENGINEER R. A. HALIM LICENSEE 2018-02-23 NWT/NU

PERMIT TO PRACTICE
HATCH LTD.
Signature
Date 2018-02-23
PERMIT NUMBER: P 512
The Association of Professional Engineers, Geologists and Geophysicists of NWT/NU

H353004-40000-220-273-0001-0001	FUEL TANK 010 & 011 DETAILS - TYPICAL SECTIONS
DRAWING No.	DRAWING TITLE

REFERENCE DRAWINGS

NAME
SIGNATURE
ENG REG NUMBER
REVISION DATE
ORIGINAL DATE
REG. PROFESSIONAL

FOR CONSTRUCTION

THIS DRAWING WAS PREPARED BY HATCH LTD. ("HATCH") FOR THE EXCLUSIVE USE OF BAFFINLAND IRON MINES LP ("CLIENT") AND ITS USE IS SUBJECT TO THE TERMS AND CONDITIONS OF THE CONTRACT BETWEEN HATCH AND THE THE CLIENT, INCLUDING ANY LIMITATIONS ON LIABILITY CONTAINED THEREIN. THIS DRAWING AND ITS CONTENTS REMAIN THE INTELLECTUAL PROPERTY OF HATCH SUBJECT TO CLIENT'S ROYALTY-FREE, IRREVOCABLE, PERPETUAL AND NON-EXCLUSIVE LICENSE TO USE AND REPRODUCE THE DRAWING FOR PURPOSES CONNECTED WITH THE PROJECT, INCLUDING THE CONSTRUCTION, COMPLETION, MAINTENANCE, EXTENSION, REINSTATEMENT AND REPAIR OF THE PROJECT. THIS DRAWING, AND THE INFORMATION CONTAINED HEREIN, SHALL BE TREATED AS CONFIDENTIAL FOR ALL OTHER PURPOSES AND SHALL NOT BE MODIFIED WITHOUT THE WRITTEN CONSENT OF HATCH.

No.	DESCRIPTION	BY	CHK'D	DATE
2	15MI DIESEL TANK ADDED	IHB	RG	13/02/2018
1	APPROVED FOR CONSTRUCTION	KT	MB	21/08/2017
0	APPROVED FOR CONSTRUCTION	FH	MB	30/06/2017

REVISIONS

HATCH

ROLE	NAME	SIGNATURE	DATE
DRAFTSPERSON	K TEFFU	NR	
DESIGNER	F HUGO	NR	
CHECKER	F HUGO		2018-02-22
DESIGN COORD.	R GOOSEN		2018-02-22
RESP. ENG.	R HALIM		2018-02-23
LEAD DISC. ENG.	A GROBBELAAR		2018-02-22
AREA MANAGER	V LAVRIC for		2018-02-23
PROJ. MANAGER	D STANGER		2018-02-23
CLIENT			

DRAWING APPROVAL STATUS: Approved for Construction

Baffinland

BAFFINLAND IRON MINES LP
MARY RIVER EXPANSION PROJECT

MILNE PORT
FUEL TANKS 003, 010 & 011 SETTING OUT EARTHWORKS

SCALE 1:500 OR AS NOTED | DWG. No. H353004-40000-220-260-0003-0001 | REV 2

SHEET SIZE: D

$USERNAME$
$DATE$
$FILE$
$TIME$

DWG. No. H353004-40000-220-273-0001-0001

SCALES:
HORIZONTAL 1:100
VERTICAL 1:100

DATUM 9.000

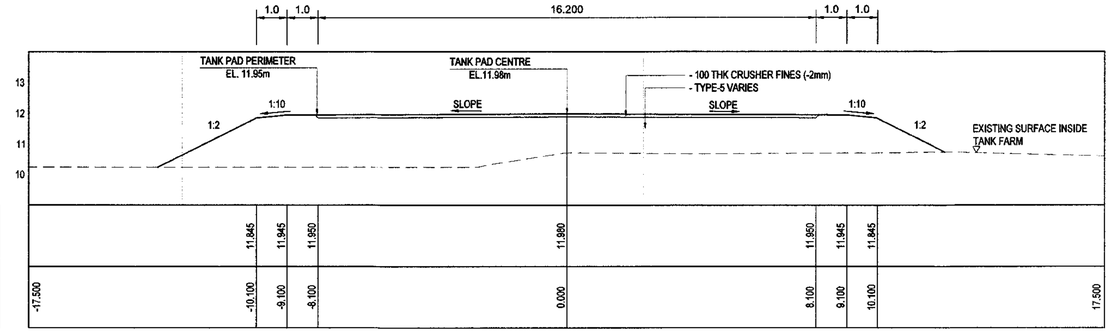

TERRACE LEVELS THROUGH CENTRE	11.845	11.945	11.950	11.980	11.950	11.945	11.845
DISTANCE(m)	-10.100	-9.100	-8.100	0.000	8.100	9.100	10.100

-17.500 … 17.500

SECTION A-A THROUGH TK011 TERRACE
FROM -17.500 TO +17.500

2

SCALES:
HORIZONTAL 1:100
VERTICAL 1:100

DATUM 9.000

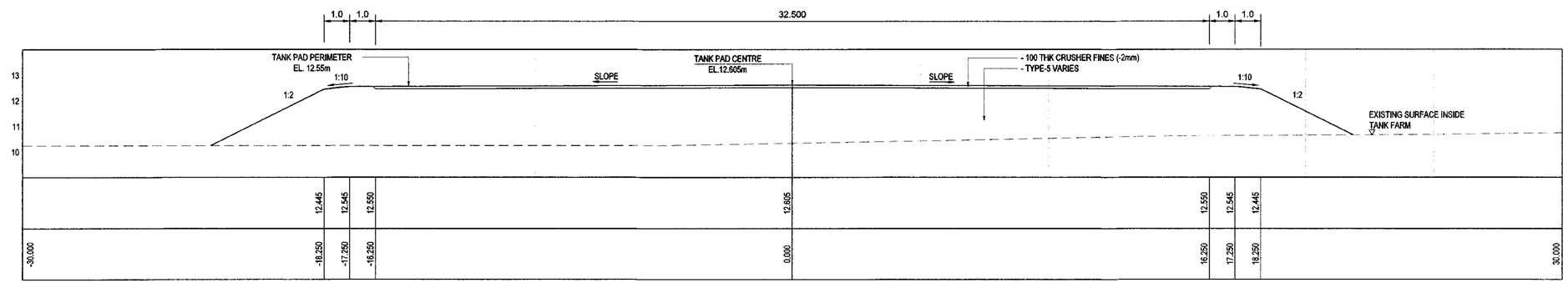

TERRACE LEVELS THROUGH CENTRE	12.445	12.545	12.550	12.605	12.550	12.545	12.445
DISTANCE(m)	-18.250	-17.250	-16.250	0.000	16.250	17.250	18.250

-30.000 … 30.000

SECTION B-B THROUGH TK003 TERRACE
FROM -30.000 TO +30.000

SCALES:
HORIZONTAL 1:100
VERTICAL 1:100

DATUM 9.000

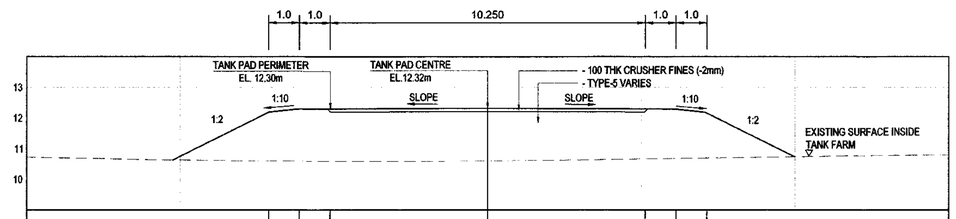

TERRACE LEVELS THROUGH CENTRE	12.195	12.295	12.300	12.320	12.300	12.295	12.195
DISTANCE(m)	-7.125	-6.125	-5.125	0.000	5.125	6.125	7.125

-15.000 … 15.000

SECTION C-C THROUGH TK010 TERRACE
FROM -15.000 TO +15.000

REGISTERED PROFESSIONAL ENGINEER
Reg# L1247
R. A. HALIM
LICENSEE
2018-02-23
NWT/NU

PERMIT TO PRACTICE
HATCH LTD.
Signature
2018-02-23
Date
PERMIT NUMBER: P 512
The Association of Professional Engineers, Geologists and Geophysicists of NWT/NU

DRAWING No.	DRAWING TITLE
H353004-40000-220-260-0003-0001	NEW FUEL TANKS SETTING OUT DETAILS

REFERENCE DRAWINGS

NAME
SIGNATURE
ENG REG NUMBER
REVISION DATE
ORIGINAL DATE
REG. PROFESSIONAL

FOR CONSTRUCTION

THIS DRAWING WAS PREPARED BY HATCH LTD. ("HATCH") FOR THE EXCLUSIVE USE OF BAFFINLAND IRON MINES LP ("CLIENT") AND ITS USE IS SUBJECT TO THE TERMS AND CONDITIONS OF THE CONTRACT BETWEEN HATCH AND THE THE CLIENT, INCLUDING ANY LIMITATIONS ON LIABILITY CONTAINED THEREIN. THIS DRAWING AND ITS CONTENTS REMAIN THE INTELLECTUAL PROPERTY OF HATCH SUBJECT TO CLIENT'S ROYALTY-FREE, IRREVOCABLE, PERPETUAL AND NON-EXCLUSIVE LICENSE TO USE AND REPRODUCE THE DRAWING FOR PURPOSES CONNECTED WITH THE PROJECT, INCLUDING THE CONSTRUCTION, COMPLETION, MAINTENANCE, EXTENSION, REINSTATEMENT AND REPAIR OF THE PROJECT. THIS DRAWING, AND THE INFORMATION CONTAINED HEREIN, SHALL BE TREATED AS CONFIDENTIAL FOR ALL OTHER PURPOSES AND SHALL NOT BE MODIFIED WITHOUT THE WRITTEN CONSENT OF HATCH.

No.	DESCRIPTION	BY	CHK'D	DATE
2	CROSS SECTION B-B ADDED	IHB	RG	13/02/2018
1	APPROVED FOR CONSTRUCTION	KT	MB	21/08/2017
0	APPROVED FOR CONSTRUCTION	FH	MB	30/06/2017

REVISIONS

HATCH

ROLE	NAME	SIGNATURE	DATE
DRAFTSPERSON	K TEFFU	NR	
DESIGNER	K TEFFU	NR	
CHECKER	F HUGO		2018-02-22
DESIGN COORD.	R GOOSEN		2018-02-22
RESP. ENG.	R HALIM		2018-02-23
LEAD DISC. ENG.	A GROBBELAAR		2018-02-22
AREA MANAGER	V LAVRIC for		2018-02-23
PROJ. MANAGER	D STANGER		2018-02-23
CLIENT	T. Ktoba		3-1-18

DRAWING APPROVAL STATUS: Approved for Construction

Baffinland

BAFFINLAND IRON MINES LP
MARY RIVER EXPANSION PROJECT

MILNE PORT
FUEL TANKS 003, 010 & 011 DETAILS
TYPICAL SECTIONS

SCALE 1:100 OR AS NOTED | DWG. No. H353004-40000-220-273-0001-0001 | REV 2

SHEET SIZE: D

$USERNAME$
$DATE$
$TIME$
$FILES$

DWG. No. H353004-48000-210-282-0001-0001

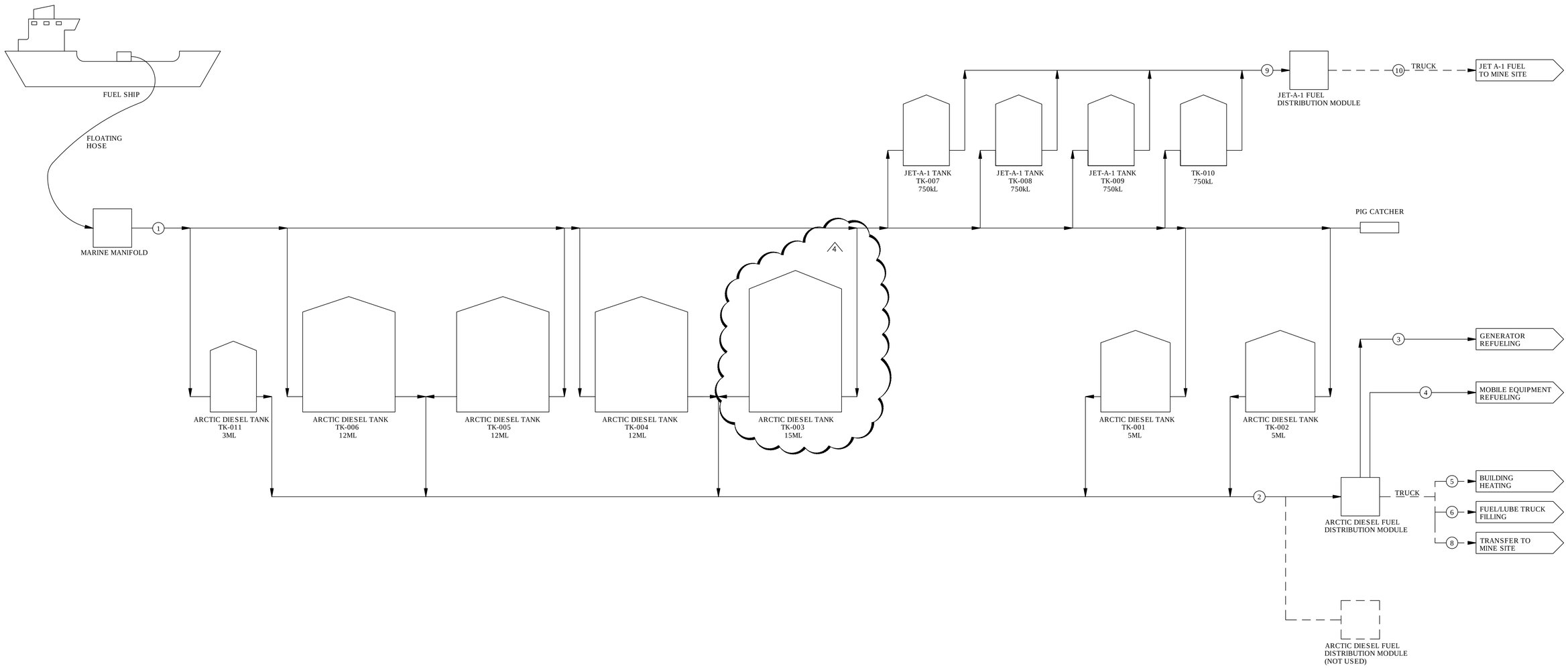

STREAM NUMBER	UNIT	1	2	3	4	5	6	7	8	9	10
DESIGN FLOW	L/min	2,500	1,600	100	100	1,500	1,500	1,500	1,500	1,500	1,500
MAX FLOW	ML/YR	55,3	-	8	1,8	1,4	4,4	4,4	38,7	-	3
DESIGN TEMPERATURE(MAX)	°C	20	20	20	20	20	20	20	20	20	20
DESIGN TEMPERATURE(MIN)	°C	-54	-54	-54	-54	-54	-54	-54	-54	-54	-54

NOTES

1. TANKS ARE FILLED ONE AT A TIME
2. TANKS ARE DRAWN DOWN ONE AT A TIME
3. TANKS FILLED TO 95% OF NOMINAL CAPACITY

REGISTERED PROFESSIONAL ENGINEER F.E. BUTTS LICENSEE 20 OCT 2018 NT/NU

DRAWING No.	DRAWING TITLE
REFERENCE DRAWINGS	

NAME
SIGNATURE
ENG REG NUMBER
REVISION DATE
ORIGINAL DATE
REG. PROFESSIONAL

Reserved space for Issue Reason stamp applied by Document Control

THIS DRAWING WAS PREPARED BY HATCH LTD. ("HATCH") FOR THE EXCLUSIVE USE OF BAFFINLAND IRON MINES LP ("CLIENT") AND ITS USE IS SUBJECT TO THE TERMS AND CONDITIONS OF THE CONTRACT BETWEEN HATCH AND THE CLIENT, INCLUDING ANY LIMITATIONS ON LIABILITY CONTAINED THEREIN. THIS DRAWING AND ITS CONTENTS REMAIN THE INTELLECTUAL PROPERTY OF HATCH SUBJECT TO CLIENT'S ROYALTY-FREE, IRREVOCABLE, PERPETUAL AND NON-EXCLUSIVE LICENSE TO USE AND REPRODUCE THE DRAWING FOR PURPOSES CONNECTED WITH THE PROJECT, INCLUDING THE CONSTRUCTION, COMPLETION, MAINTENANCE, EXTENSION, REINSTATEMENT AND REPAIR OF THE PROJECT. THIS DRAWING, AND THE INFORMATION CONTAINED HEREIN, SHALL BE TREATED AS CONFIDENTIAL FOR ALL OTHER PURPOSES AND SHALL NOT BE MODIFIED WITHOUT THE WRITTEN CONSENT OF HATCH.

No.	DESCRIPTION	BY	CHK'D	DATE
4	TK-003 ADDED; ISSUED FOR USE	SJM	SS	19/12/23
3	APPROVED FOR USE	SJM	SS	17/04/17
2	GENERAL UPDATE; ISSUED FOR USE	S.S.	MMI	07/06/17
1	APPROVED FOR USE	S.S.	MMI	07/05/17
0	APPROVED FOR FEASIBILITY STUDY	N.M.		27-03-2017

REVISIONS

HATCH

ROLE	NAME	SIGNATURE	DATE
DRAFTSPERSON	J. MCNEIL	J. McNeil	19/12/23
DESIGNER	M. MACINTYRE	Michael MacIntyre	18/02/28
CHECKER	S. SKINNER		18/02/28
DESIGN COORD.	M. MACINTYRE	Michael MacIntyre	18/02/28
RESP. ENG.	F. BUTTS	F. Butts	18/02/28
LEAD DISC. ENG.	F. BUTTS	F. Butts	18/02/28
ENG. MANAGER	J. HOWES		
PROJ. MANAGER	SVEN HEINER		

DRAWING APPROVAL STATUS: APPROVED FOR USE

Baffinland

MARY RIVER PROJECT
BAFFINLAND IRON MINES LP

PORT SITE
TM001 FUEL SYSTEM
PROCESS FLOW DIAGRAM

SCALE 1:1 OR AS NOTED | DWG. No. H353004-48000-210-282-0001-0001 | REV 4

SHEET SIZE: A1

DWG. No. H353004-48000-210-282-0002

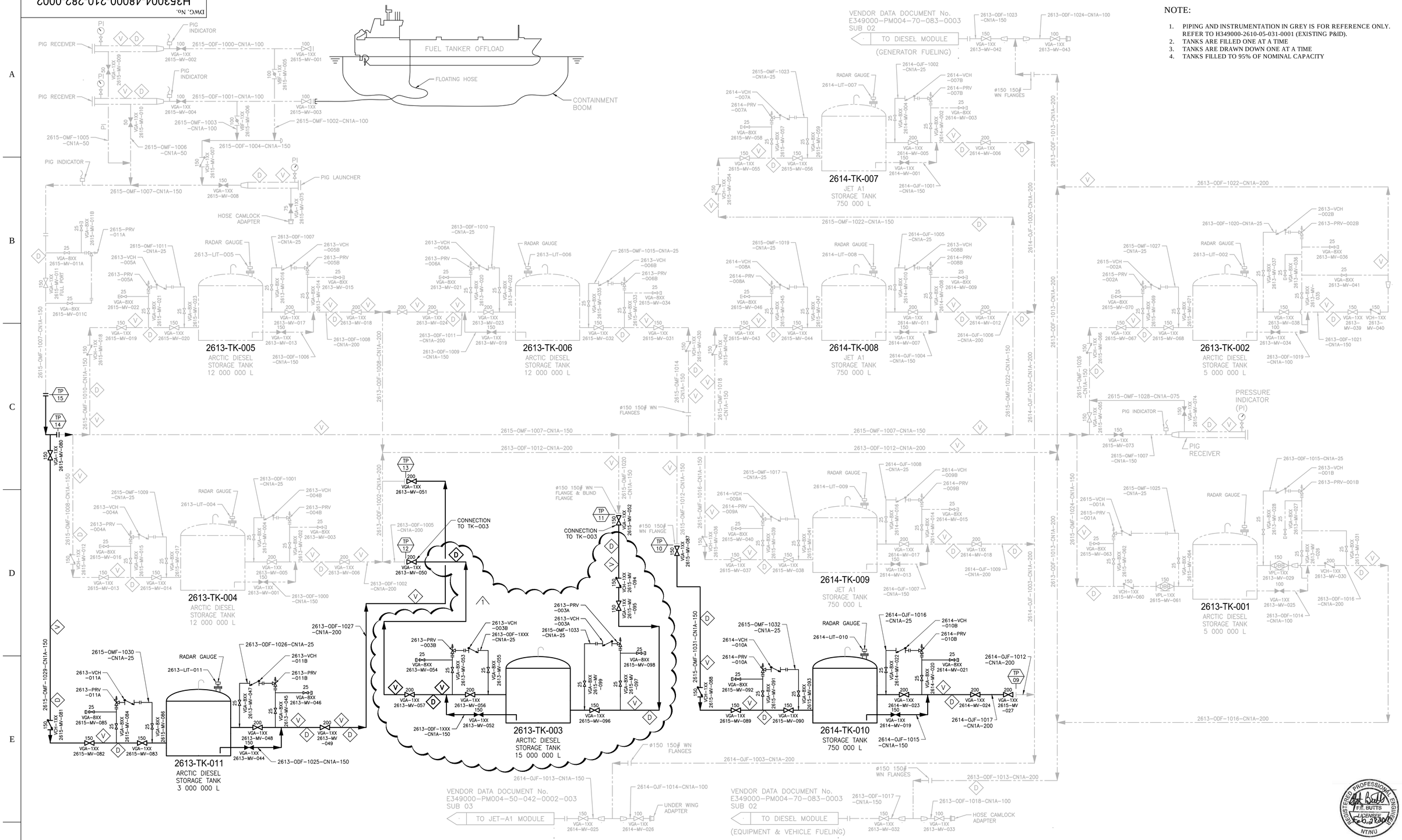

NOTE:

1. PIPING AND INSTRUMENTATION IN GREY IS FOR REFERENCE ONLY. REFER TO H349000-2610-05-031-0001 (EXISTING P&ID).
2. TANKS ARE FILLED ONE AT A TIME
3. TANKS ARE DRAWN DOWN ONE AT A TIME
4. TANKS FILLED TO 95% OF NOMINAL CAPACITY

REGISTERED PROFESSIONAL ENGINEER F.E. BUTTS LICENSED NT/NU

DRAWING No.	DRAWING TITLE
349000-2610-05-031-0001	MILNE PORT TANK FARM P&ID
349000-1000-75-041-0007	LEGEND SHEET 6 OF 7 - EQUIPMENT
349000-1000-75-041-0006	LEGEND SHEET 5 OF 7 - EQUIPMENT
349000-1000-75-041-0005	LEGEND SHEET 5 OF 7 - INSTRUMENTATION
349000-1000-75-041-0004	LEGEND SHEET 4 OF 7 - INSTRUMENTATION
349000-1000-75-041-0003	LEGEND SHEET 3 OF 7 - PIPING
349000-1000-75-041-0002	LEGEND SHEET 2 OF 7 - ASSET TAGGING
349000-1000-75-041-0001	LEGEND SHEET 1 OF 7 - ASSET TAGGING

REFERENCE DRAWINGS

NAME
SIGNATURE
ENG REG NUMBER
REVISION DATE
ORIGINAL DATE
REG. PROFESSIONAL

Reserved space for Issue Reason stamp applied by Document Control

THIS DRAWING WAS PREPARED BY HATCH LTD. ('HATCH') FOR THE EXCLUSIVE USE OF BAFFINLAND IRON MINES LP ('CLIENT') AND ITS USE IS SUBJECT TO THE TERMS AND CONDITIONS OF THE CONTRACT BETWEEN HATCH AND THE CLIENT, INCLUDING ANY LIMITATIONS ON LIABILITY CONTAINED THEREIN. THIS DRAWING AND ITS CONTENTS REMAIN THE INTELLECTUAL PROPERTY OF HATCH SUBJECT TO CLIENT'S ROYALTY-FREE, IRREVOCABLE, PERPETUAL AND NON-EXCLUSIVE LICENSE TO USE AND REPRODUCE THE DRAWING FOR PURPOSES CONNECTED WITH THE PROJECT, INCLUDING THE CONSTRUCTION, COMPLETION, MAINTENANCE, EXTENSION, REINSTATEMENT AND REPAIR OF THE PROJECT. THIS DRAWING, AND THE INFORMATION CONTAINED HEREIN, SHALL BE TREATED AS CONFIDENTIAL FOR ALL OTHER PURPOSES AND SHALL NOT BE MODIFIED WITHOUT THE WRITTEN CONSENT OF HATCH.

REVISIONS

No.	DESCRIPTION	BY	CHK'D	DATE
1	TK-003 ADDED; ISSUED FOR USE	SJM	SS	18/02/28
0	ISSUED FOR CONSTRUCTION	SJM	SS	17/09/19

HATCH

ROLE	NAME	SIGNATURE	DATE
DRAFTSPERSON	J. MCNEIL	J. McNeil	18/02/28
DESIGNER	M. MACINTYRE	Michael MacIntyre	18/02/28
CHECKER	S. SKINNER		18/02/28
DESIGN COORD.	M. MACINTYRE	Michael MacIntyre	18/02/28
RESP. ENG.	F. BUTTS	F. Butts	18/02/28
LEAD DISC. ENG.	F. BUTTS	F. Butts	18/02/28
ENG. MANAGER	J. HOWES		
PROJ. MANAGER	SVEN HEINER		

DRAWING APPROVAL STATUS: Approved for Construction

Baffinland

MARY RIVER EXPANSION PROJECT
BAFFINLAND IRON MINES LP

PORT SITE
TM001 FUEL SYSTEM
P&ID

SCALE: AS NOTED OR AS NOTED
DWG. No. H353004-48000-210-282-0002
REV 1
SHEET SIZE: A1

DWG. No. H353004-48400-240-270-0001

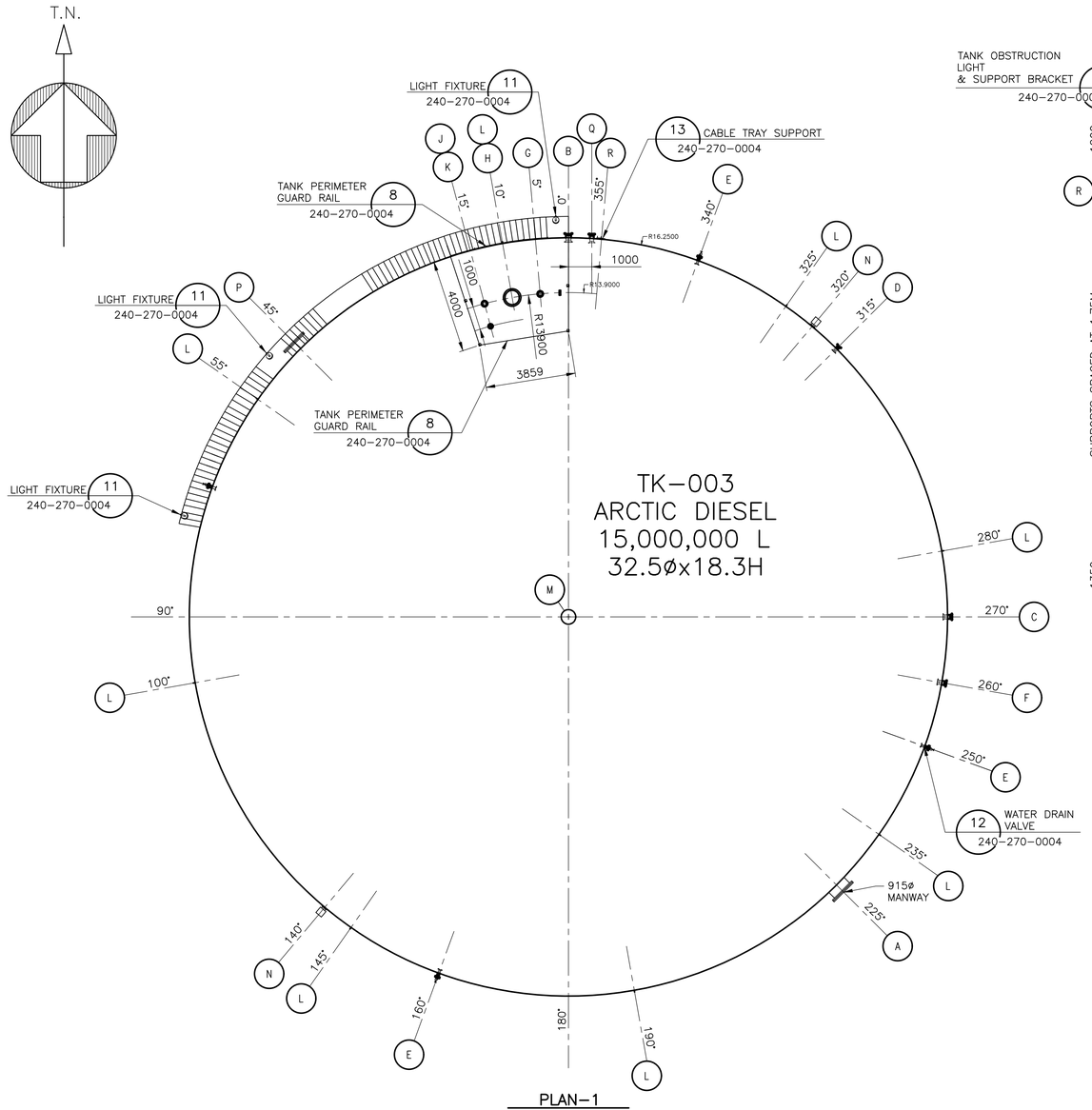

PLAN-1
TANK ORIENTATION
SCALE: 1:125

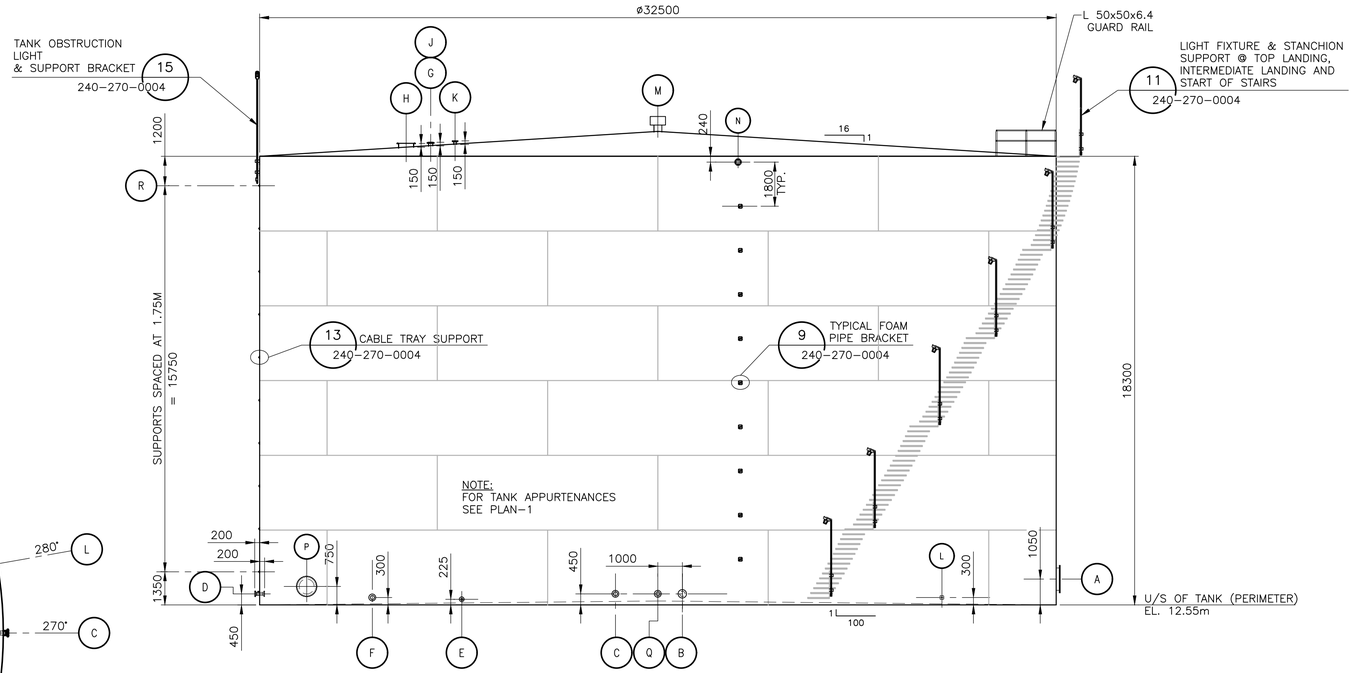

ELEVATION A
TANK ORIENTATION
SCALE: 1:125

TANK APPURTENANCES							
ITEM	NO.	SERVICE	SIZE	RATING	TYPE	REMARKS	REFERENCE DETAIL
A	1	SHELL MANWAY	915 (36")	API 650	FF	API 650 FIG. 5-7A	DET. 1, DWG: 240-270-0004
B	1	TANK SUCTION	200 (8")	CLASS 150	RF WELD NECK	DOUBLE FLANGED /W 25mm SW HALF COUPLING ON EXTERIOR NOZZLE	N/A
C	1	TANK FILL	150 (6")	CLASS 150	RF WELD NECK	DOUBLE FLANGED /W 25mm SW HALF COUPLING ON EXTERIOR NOZZLE	N/A
D	1	SPARE SHELL NOZZLE	100 (4")	CLASS 150	RF WELD NECK	DOUBLE FLANGED	N/A
E	4	WATER DRAIN NOZZLE	75 (3")	CLASS 150	RF WELD NECK	FLANGED	DET. 12, DWG: 240-270-0004
F	1	SPARE SHELL NOZZLE	150 (6")	CLASS 150	RF WELD NECK	FLANGED w/ BLIND FLANGE	N/A
G	1	GAUGE HATCH	150 (6")	CLASS 150	RF SLIP ON	FLANGED	DET. 3, DWG: 240-270-0004
H	1	ROOF MANWAY c/w EMERGENCY VENT	610 (24")	API 650	FF	C/W COVER	DET. 5, DWG: 240-270-0004
J	1	RADAR GAUGE	150 (6")	CLASS 150	RF SLIP ON	SINGLE FLANGE	DET. 2, DWG: 240-270-0004
K	1	ROOF NOZZLE (OVERFILL PROBE)	100 (4")	CLASS 150	RF SLIP ON	BLIND FLANGED	DET. 4, DWG: 240-270-0004
L	8	GROUNDING LUGS					DET. 7, DWG: 240-270-0004
M	1	ROOF VENT	305ø (12")	CLASS 150	NOZZLE	–	DET. 6, DWG: 240-270-0004
N	2	FOAM CONNECTION NOZZLE	150 (6")	CLASS 150	RF SLIP ON	OPENING & BOLT CIRCLE IN PLATE FOR A 150ø FLANGE	DET. 10, DWG: 240-270-0004
P	1	SHELL MANWAY	610 (24")	API 650	FF	API 650 FIG. 5-7A	DET. 1, DWG: 240-270-0004
Q	1	TANK DRAW DOWN	150 (6")	API 650	RF	API 650 FIG. 5-7A	DET. 14 DWG: 240-270-0004
R	8	CABLE TRAY SUPPORT					DET. 13 DWG: 240-270-0004

REGISTERED PROFESSIONAL ENGINEER F.E. BUTTS LICENSED NOV. 9 2016 NT/NU

DRAWING No.	DRAWING TITLE
REFERENCE DRAWINGS	

NAME
SIGNATURE
ENG REG NUMBER
REVISION DATE
ORIGINAL DATE
REG. PROFESSIONAL

Reserved space for Issue Reason stamp applied by Document Control

No.	DESCRIPTION	BY	CHK'D	DATE
0	ISSUED FOR CONSTRUCTION	S. Ley	MMI	05/09/17
A	ISSUED FOR REVIEW	S.L.	MMI	05-05-2017

REVISIONS

THIS DRAWING WAS PREPARED FOR THE EXCLUSIVE USE OF BAFFINLAND IRON MINES LP ("CLIENT") AND IS ISSUED PURSUANT TO THE AGREEMENT BETWEEN CLIENT AND HATCH LTD. ("HATCH"). UNLESS OTHERWISE AGREED IN WRITING WITH CLIENT OR SPECIFIED ON THIS DRAWING, (A) HATCH DOES NOT ACCEPT AND DISCLAIMS ANY AND ALL LIABILITY OR RESPONSIBILITY ARISING FROM ANY USE OF OR RELIANCE ON THIS DRAWING BY ANY THIRD PARTY OR ANY MODIFICATION OR MISUSE OF THIS DRAWING BY CLIENT, AND (B) THIS DRAWING IS CONFIDENTIAL AND ALL INTELLECTUAL PROPERTY RIGHTS EMBODIED OR REFERENCED IN THIS DRAWING REMAIN THE PROPERTY OF HATCH.

HATCH

DRAFTSPERSON	S. LEY	NR	17-05-09
DESIGNER	M. MACINTYRE	NR	17-05-09
CHECKER	M. MacIntyre		05/09/17
DESIGN COORD.			
RESP. ENG.	F. Butts		05/09/17
LEAD DISC. ENG.			
ENG. MANAGER			
PROJ. MANAGER			
DRAWING APPROVAL STATUS:	Approved for Construction		

Baffinland

MARY RIVER EXPANSION PROJECT
BAFFINLAND IRON MINES LP

PORT SITE
15M L ARCTIC DIESEL STORAGE TANK
TK-003

SCALE	DWG. No.	REV
1:125 OR AS NOTED	H353004-48400-240-270-0001	0

SHEET SIZE: A1

$USERNAME$
$DATE$
$FILES$

DWG. No. H353004-48400-240-270-0004

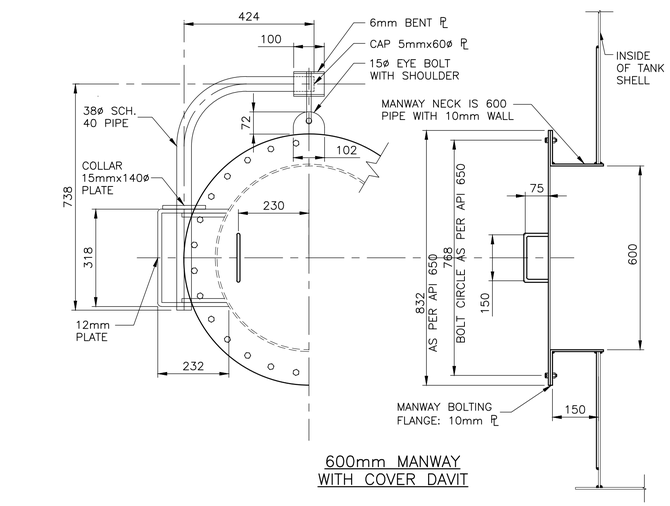

600mm MANWAY WITH COVER DAVIT

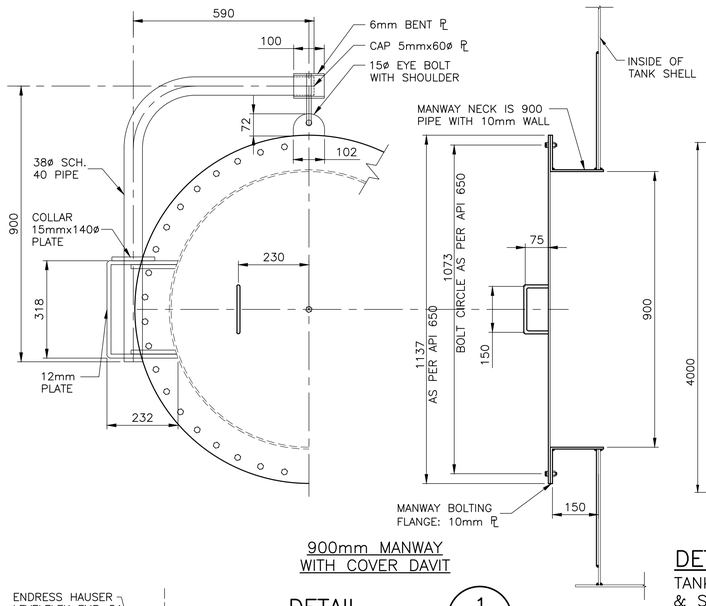

900mm MANWAY WITH COVER DAVIT

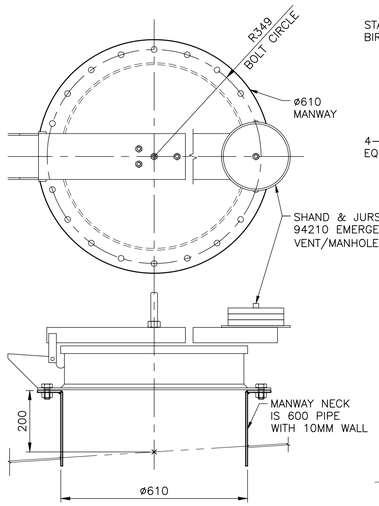

DETAIL 5 — 240-270-0001 TO 0003
ROOF MANWAY C/W EMERGENCY VENT
SCALE: 1:10

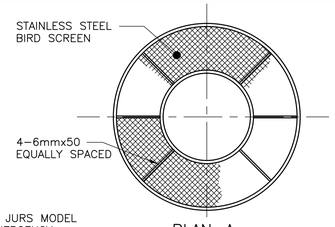

PLAN-A

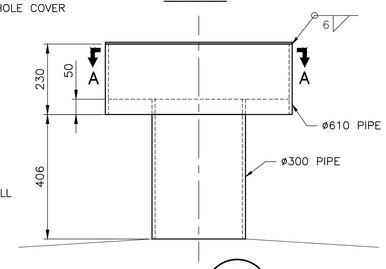

DETAIL 6 — 240-270-0001 TO 0003
ROOF VENT
SCALE: 1:10

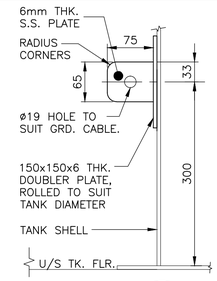

DETAIL 7 — 240-270-0001 TO 0003
GROUND LUG
SCALE: 1:5

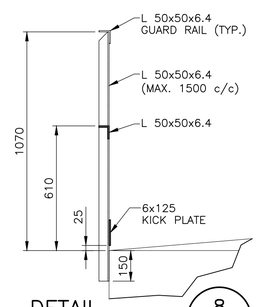

DETAIL 8 — 240-270-0001 TO 0003
TANK PERIMETER GUARD RAIL
SCALE: 1:15

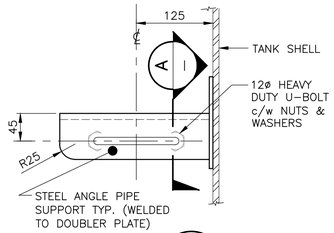

DETAIL 9 — 240-270-0001 TO 0003
TYPICAL FOAM PIPE BRACKET
SCALE: 1:5

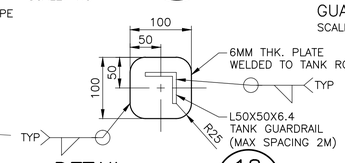

DETAIL 18 — 240-270-0001 TO 0003
TANK ROOF GUARD RAIL BASEPLATE
SCALE: 1:5

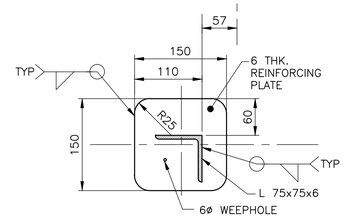

SECTION A
SCALE: 1:5

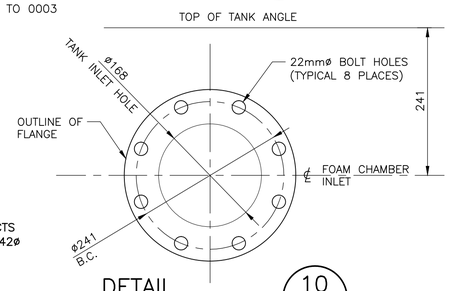

DETAIL 10 — 240-270-0001 TO 0003
FOAM INLET OPENING
SCALE: 1:5

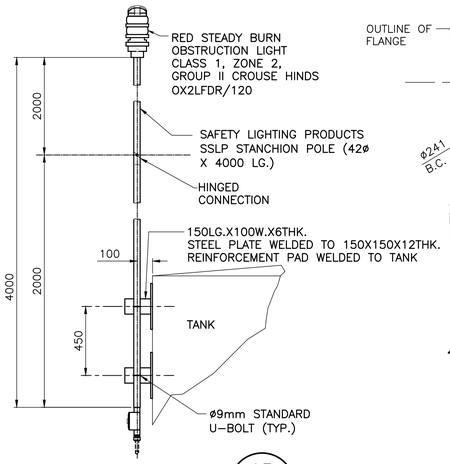

DETAIL 15 — 240-270-0001 TO 0003
TANK OBSTRUCTION LIGHT & SUPPORT BRACKET
SCALE: 1:10

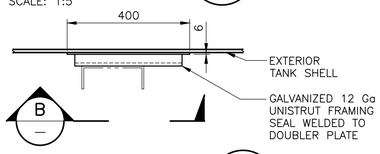

DETAIL 13 — 240-270-0001 TO 0003
CABLE TRAY SUPPORT
SCALE: 1:10

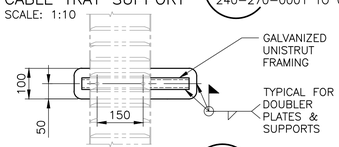

SECTION B
SCALE: 1:10

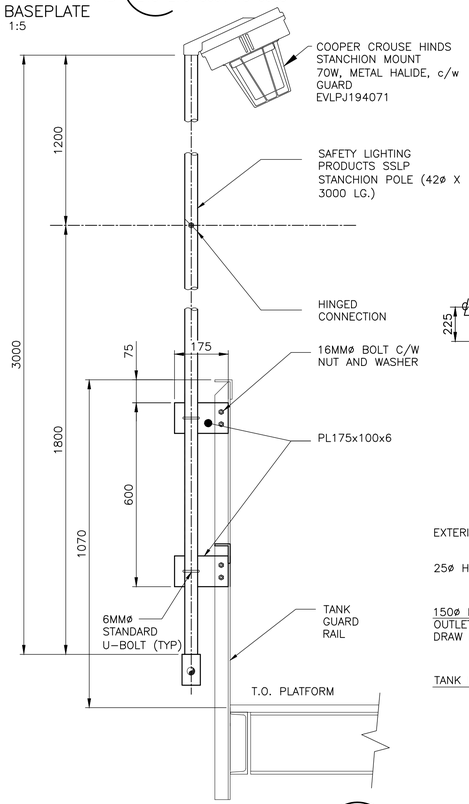

DETAIL 11 — 240-270-0001 TO 0003
LIGHT FIXTURE & STANCHION SUPPORT (3 PER TANK)
SCALE: 1:10

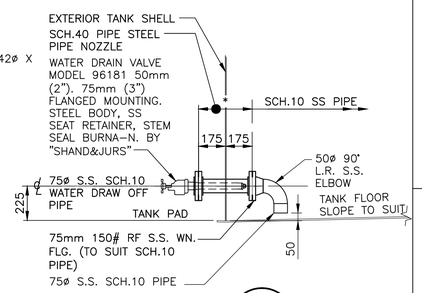

DETAIL 12 — 240-270-0001 TO 0003
WATER DRAIN VALVE
SCALE: 1:20

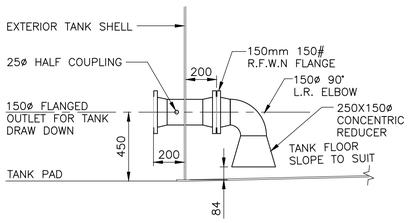

DETAIL 14 — 240-270-0001 TO 0003
TANK DRAW DOWN
SCALE: 1:20

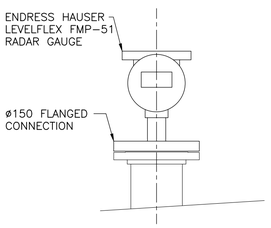

DETAIL 2 — 50-035-0001 TO 008
RADAR GAUGE
SCALE: 1:10

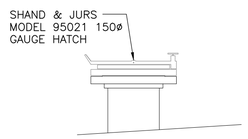

DETAIL 3 — 50-035-001 TO 008
GAUGE HATCH
SCALE: 1:10

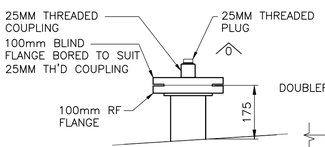

DETAIL 4 — 240-270-0001 TO 0003
OVERFILL PROBE
SCALE: 1:10

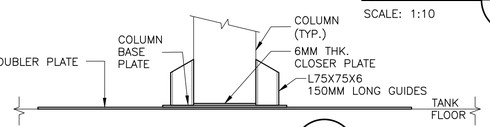

DETAIL 16 — 240-270-0001 TO 0003
COLUMN TO TANK FLOOR CONNECTION
SCALE: 1:10

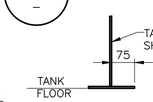

DETAIL 17 — 240-270-0001 TO 0003
ANNULAR RING OR FLOOR PLATE EXTENSION
SCALE: 1:10

Reserved space for Issue Reason stamp applied by Document Control

THIS DRAWING WAS PREPARED FOR THE EXCLUSIVE USE OF BAFFINLAND IRON MINES LP ("CLIENT") AND IS ISSUED PURSUANT TO THE AGREEMENT BETWEEN CLIENT AND HATCH LTD. ("HATCH"). UNLESS OTHERWISE AGREED IN WRITING WITH CLIENT OR SPECIFIED ON THIS DRAWING, (A) HATCH DOES NOT ACCEPT AND DISCLAIMS ANY AND ALL LIABILITY OR RESPONSIBILITY ARISING FROM ANY USE OF OR RELIANCE ON THIS DRAWING BY ANY THIRD PARTY OR ANY MODIFICATION OR MISUSE OF THIS DRAWING BY CLIENT, AND (B) THIS DRAWING IS CONFIDENTIAL AND ALL INTELLECTUAL PROPERTY RIGHTS EMBODIED OR REFERENCED IN THIS DRAWING REMAIN THE PROPERTY OF HATCH.

NAME
SIGNATURE
ENG REG NUMBER
REVISION DATE
ORIGINAL DATE

No.	DESCRIPTION	BY	CHK'D	DATE
0	ISSUED FOR CONSTRUCTION	S. L.	MMI	05/09/17
A	ISSUED FOR REVIEW	S.L.	MMI	05-05-2017

REVISIONS

ROLE	NAME	SIGNATURE	DATE
DRAFTSPERSON	S. LEY	NR	17-05-04
DESIGNER	M. MACINTYRE	NR	17-05-04
CHECKER	M. MacIntyre		05/09/17
DESIGN COORD.			
RESP. ENG.	F. Butts		05/09/17
LEAD DISC. ENG.			
ENG. MANAGER			
PROJ. MANAGER	-		

DRAWING APPROVAL STATUS: Approved for Construction

HATCH

Baffinland

MARY RIVER EXPANSION PROJECT
BAFFINLAND IRON MINES LP

PORT SITE
TYPICAL VERTICAL TANK DETAILS

SCALE: AS NOTED OR AS NOTED
DWG. No. H353004-48400-240-270-0004
REV 0
SHEET SIZE: A1

DRAWING No. | DRAWING TITLE
REFERENCE DRAWINGS
REG. PROFESSIONAL

SUSERNAMES
SDATES
SFILES
STIMES

DWG. No. H353004-48400-240-270-0005

NOTE:

1. FOR PIPE AND CABLE TRAY SUPPORTS SEE DRAWING 48400-240-270-0009

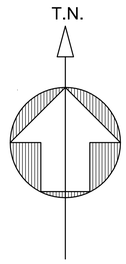

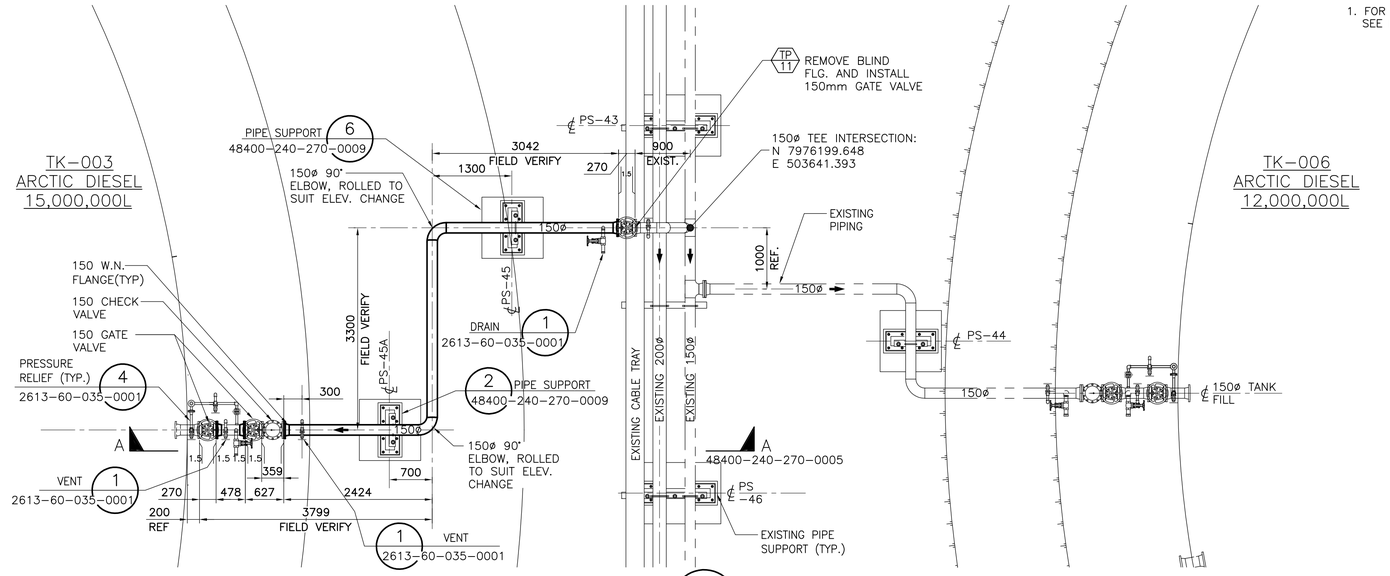

PLAN 1 240-272-0002-0001

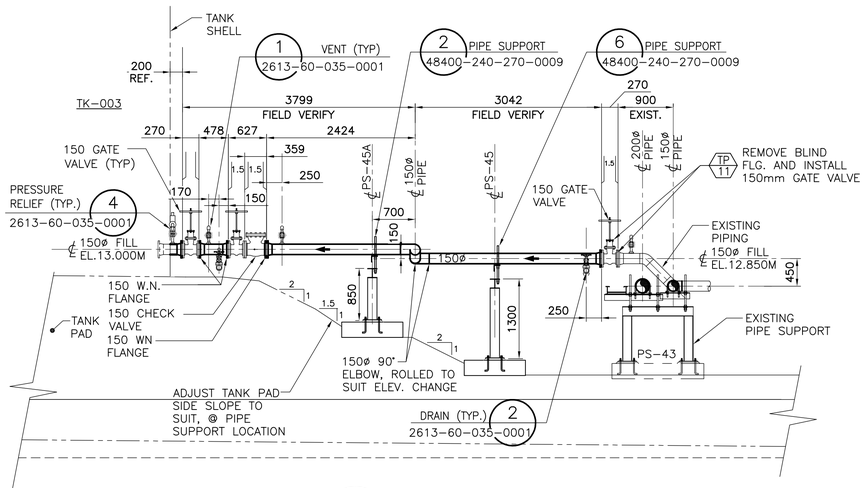

SECTION A 48400-240-270-0005

REGISTERED PROFESSIONAL ENGINEER F.E. BUTTS LICENSEE May 19, 2017 NT/NU

		NAME	Reserved space for Issue Reason stamp applied by Document Control					HATCH				Baffinland	
		SIGNATURE						DRAFTSPERSON	S. LEY	NR		MARY RIVER EXPANSION PROJECT BAFFINLAND IRON MINES LP	
		ENG REG NUMBER						DESIGNER	M. MACINTYRE	NR			
		REVISION DATE						CHECKER	M. MacIntyre		05/25/17		
								DESIGN COORD.				PORT SITE TK-003 INLET PIPING PLAN & SECTION	
								RESP. ENG.	F. Butts		05/25/17		
								LEAD DISC. ENG.					
								ENG. MANAGER					
								PROJ. MANAGER	-				
		ORIGINAL DATE	0	ISSUED FOR CONSTRUCTION	S.L.	MM	05/25/17						
DRAWING No.	DRAWING TITLE		No.	DESCRIPTION	BY	CHK'D	DATE	ROLE	NAME	SIGNATURE	DATE	SCALE AS NOTED OR AS NOTED	DWG. No. H353004-48400-240-270-0005 REV 0
REFERENCE DRAWINGS		REG. PROFESSIONAL	REVISIONS					DRAWING APPROVAL STATUS:	Approved for Construction				

THIS DRAWING WAS PREPARED FOR THE EXCLUSIVE USE OF BAFFINLAND IRON MINES LP ("CLIENT") AND IS ISSUED PURSUANT TO THE AGREEMENT BETWEEN CLIENT AND HATCH LTD. ("HATCH"). UNLESS OTHERWISE AGREED IN WRITING WITH CLIENT OR SPECIFIED ON THIS DRAWING, (A) HATCH DOES NOT ACCEPT AND DISCLAIMS ANY AND ALL LIABILITY OR RESPONSIBILITY ARISING FROM ANY USE OF OR RELIANCE ON THIS DRAWING BY ANY THIRD PARTY OR ANY MODIFICATION OR MISUSE OF THIS DRAWING BY CLIENT, AND (B) THIS DRAWING IS CONFIDENTIAL AND ALL INTELLECTUAL PROPERTY RIGHTS EMBODIED OR REFERENCED IN THIS DRAWING REMAIN THE PROPERTY OF HATCH.

SHEET SIZE: A1

DWG. No. H353004-48400-240-270-0006

NOTE:

1. FOR PIPE AND CABLE TRAY SUPPORTS SEE DRAWING 48400-240-270-0009

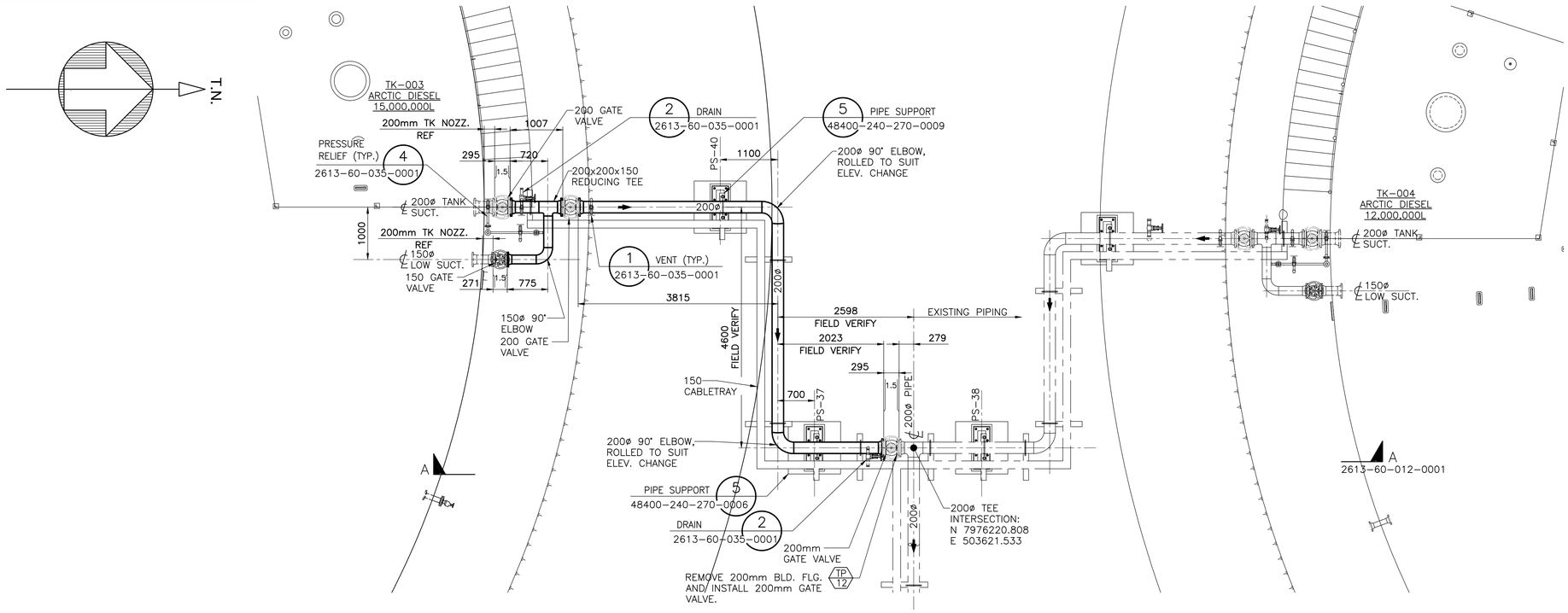

PLAN (1) 240-272-00002-0001
SCALE: 1:50

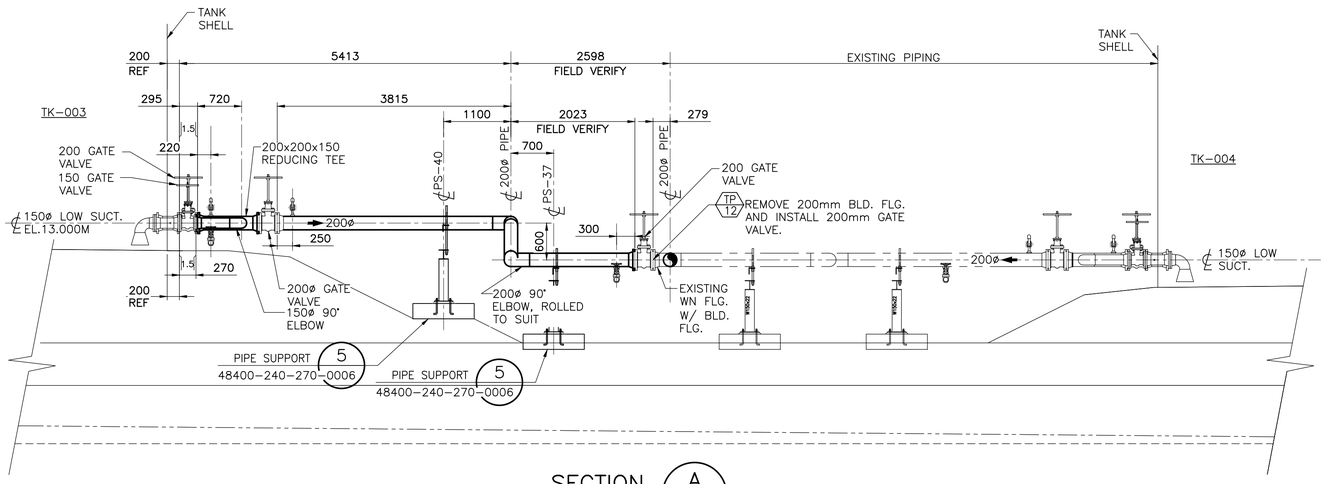

SECTION (A) 48400-240-270-0006
SCALE: 1:50

REGISTERED PROFESSIONAL ENGINEER
A.E. BUTTS
LICENSEE
NT/NU

		NAME	Reserved space for Issue Reason stamp applied by Document Control										
		SIGNATURE											
		ENG REG NUMBER											
		REVISION DATE											
		ORIGINAL DATE	0	ISSUED FOR CONSTRUCTION	S. Ley	MM	05/25/17						
DRAWING No.	DRAWING TITLE		No.	DESCRIPTION	BY	CHK'D	DATE	ROLE	NAME	SIGNATURE	DATE		
REFERENCE DRAWINGS		REG. PROFESSIONAL	REVISIONS					DRAWING APPROVAL STATUS:		Approved for Construction			

THIS DRAWING WAS PREPARED FOR THE EXCLUSIVE USE OF BAFFINLAND IRON MINES LP ("CLIENT") AND IS ISSUED PURSUANT TO THE AGREEMENT BETWEEN CLIENT AND HATCH LTD. ("HATCH"). UNLESS OTHERWISE AGREED IN WRITING WITH CLIENT OR SPECIFIED ON THIS DRAWING, (A) HATCH DOES NOT ACCEPT AND DISCLAIMS ANY AND ALL LIABILITY OR RESPONSIBILITY ARISING FROM ANY USE OF OR RELIANCE ON THIS DRAWING BY ANY THIRD PARTY OR ANY MODIFICATION OR MISUSE OF THIS DRAWING BY CLIENT, AND (B) THIS DRAWING IS CONFIDENTIAL AND ALL INTELLECTUAL PROPERTY RIGHTS EMBODIED OR REFERENCED IN THIS DRAWING REMAIN THE PROPERTY OF HATCH.

HATCH

DRAFTSPERSON	S. LEY	NR	
DESIGNER	M. MACINTYRE	NR	
CHECKER	M. MacIntyre		05/25/17
DESIGN COORD.			
RESP. ENG.	A. Butts		05/25/17
LEAD DISC. ENG.			
ENG. MANAGER			
PROJ. MANAGER	-		

Baffinland

MARY RIVER EXPANSION PROJECT
BAFFINLAND IRON MINES LP

PORT SITE
TK-003 OUTLET PIPING
PLAN & SECTION

SCALE	DWG. No.	REV
AS NOTED OR AS NOTED	H353004-48400-240-270-0006	0

SHEET SIZE: A1

DWG. No. H353004-48400-240-270-0009

NOTE:

1. FOR PIPE AND CABLE TRAY SUPPORT LOCATIONS DRAWINGS 48400-240-270-0005 THRU -0008

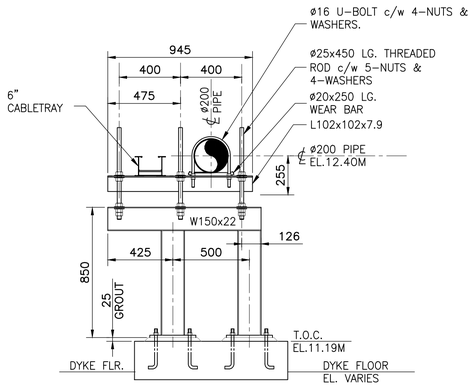

DETAIL 1
PS-87
SCALE: 1:20
48400-240-270-0007

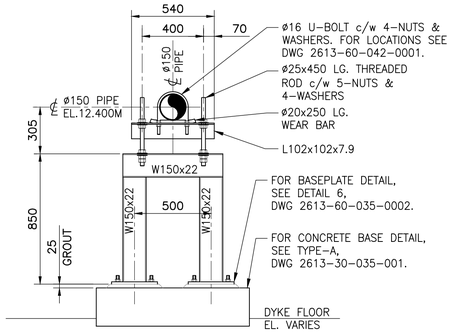

DETAIL 2
PS-45A, PS-83 & PS-84
SCALE: 1:20
48400-240-270-0007

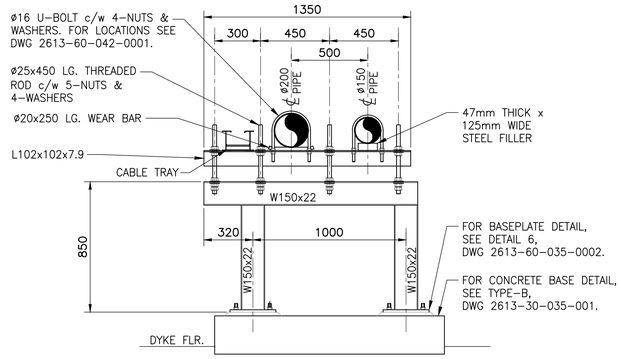

DETAIL 3
REPLACES EXISTING PIPE SUPPORTS PS-20 TO 26A
SCALE: 1:20
48400-240-270-0008

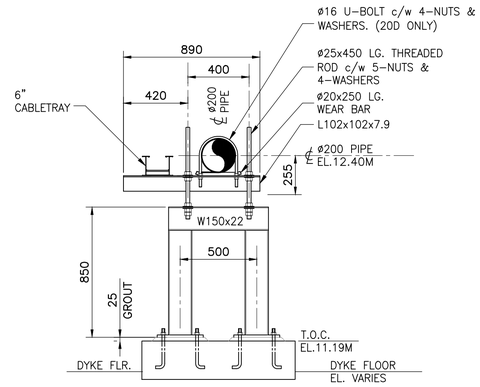

DETAIL 4
PS-20A TO 20D
SCALE: 1:20
48400-240-270-0008

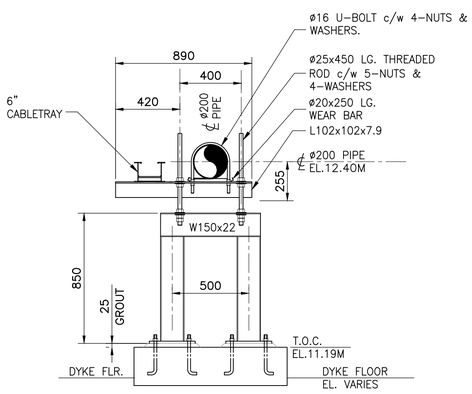

DETAIL 5
PS-37 & 40
SCALE: 1:20
48400-240-270-0006

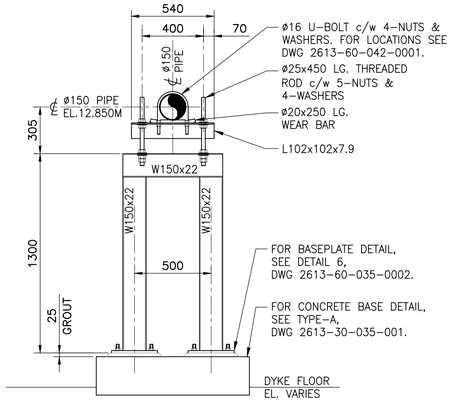

DETAIL 6
PS-45
SCALE: 1:20
48400-240-270-0005

REGISTERED PROFESSIONAL ENGINEER F.E. BUTTS LICENSEE NT/NU

DRAWING No.	DRAWING TITLE
REFERENCE DRAWINGS	

NAME
SIGNATURE
ENG REG NUMBER
REVISION DATE
ORIGINAL DATE
REG. PROFESSIONAL

Reserved space for Issue Reason stamp applied by Document Control

THIS DRAWING WAS PREPARED FOR THE EXCLUSIVE USE OF BAFFINLAND IRON MINES LP ("CLIENT") AND IS ISSUED PURSUANT TO THE AGREEMENT BETWEEN CLIENT AND HATCH LTD. ("HATCH"). UNLESS OTHERWISE AGREED IN WRITING WITH CLIENT OR SPECIFIED ON THIS DRAWING, (A) HATCH DOES NOT ACCEPT AND DISCLAIMS ANY AND ALL LIABILITY OR RESPONSIBILITY ARISING FROM ANY USE OF OR RELIANCE ON THIS DRAWING BY ANY THIRD PARTY OR ANY MODIFICATION OR MISUSE OF THIS DRAWING BY CLIENT, AND (B) THIS DRAWING IS CONFIDENTIAL AND ALL INTELLECTUAL PROPERTY RIGHTS EMBODIED OR REFERENCED IN THIS DRAWING REMAIN THE PROPERTY OF HATCH.

No.	DESCRIPTION	BY	CHK'D	DATE
0	ISSUED FOR CONSTRUCTION	S. Ley	MMI	05/25/17

REVISIONS

HATCH

ROLE	NAME	SIGNATURE	DATE
DRAFTSPERSON	S. LEY	NR	
DESIGNER	M. MACINTYRE	NR	
CHECKER	M. MacIntyre		05/25/17
DESIGN COORD.			
RESP. ENG.	F. Butts		05/25/17
LEAD DISC. ENG.			
ENG. MANAGER			
PROJ. MANAGER	-		

DRAWING APPROVAL STATUS: Approved for Construction

Baffinland

MARY RIVER EXPANSION PROJECT
BAFFINLAND IRON MINES LP

PORT SITE
MISCELLANEOUS DETAILS

SCALE: AS NOTED OR AS NOTED
DWG. No.: H353004-48400-240-270-0009
REV: 0
SHEET SIZE: A1

DWG. No. H353004-48000-240-272-0001

NOTES:

1. REFER TO THE FOLLOWING DRAWINGS FOR GENSET PIPING DETAILS:
   H353004-48400-240-270-0014
   H353004-48400-240-270-0015

2. REFER TO THE FOLLOWING DRAWING FOR FUEL SYSTEM PIPING SYSTEM:
   H353004-48400-240-272-0002

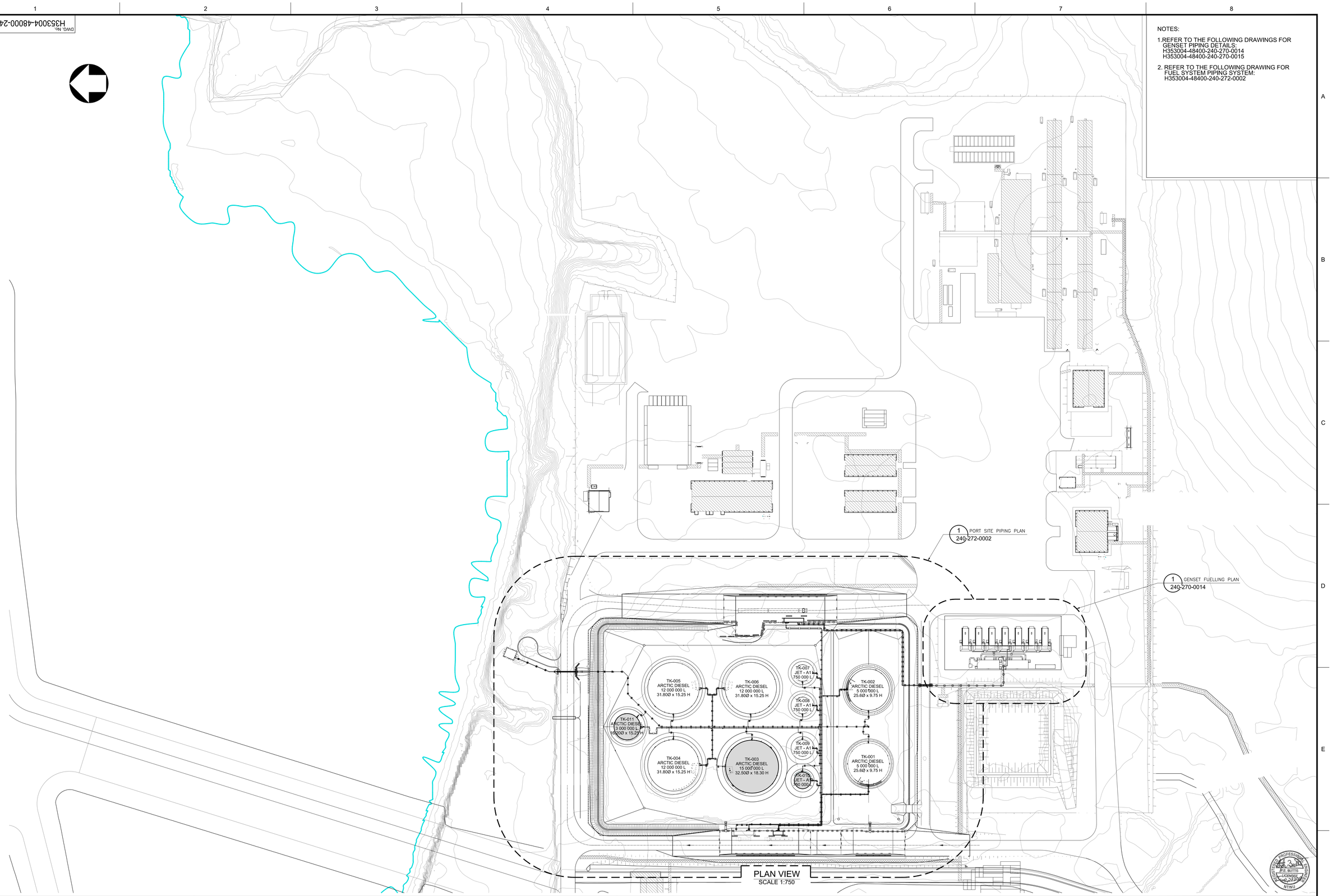

PLAN VIEW
SCALE 1:750

DRAWING No.	DRAWING TITLE
REFERENCE DRAWINGS	

NAME
SIGNATURE
ENG REG NUMBER
REVISION DATE
ORIGINAL DATE
REG. PROFESSIONAL

THIS DRAWING WAS PREPARED FOR THE EXCLUSIVE USE OF BAFFINLAND IRON MINES LP ("CLIENT") AND IS ISSUED PURSUANT TO THE AGREEMENT BETWEEN CLIENT AND HATCH LTD. ("HATCH"). UNLESS OTHERWISE AGREED IN WRITING BETWEEN CLIENT AND HATCH, HATCH MAKES NO REPRESENTATIONS OR WARRANTIES, AND ASSUMES NO DUTY OR RESPONSIBILITY ARISING FROM ANY USE OF OR RELIANCE ON THIS DRAWING BY ANY THIRD PARTY OR ANY MODIFICATION OR MISUSE OF THIS DRAWING BY CLIENT, AND (B) THIS DRAWING IS CONFIDENTIAL AND ALL INTELLECTUAL PROPERTY RIGHTS EMBODIED OR REFERENCED IN THIS DRAWING REMAIN THE PROPERTY OF HATCH.

No.	DESCRIPTION	BY	CHK'D	DATE
2	GENERAL UPDATE; ISSUED FOR CONSTRUCTION	S.S.	MM	07/06/17
1	MANIFOLD RELOCATION AND MARINE FUEL LINE ON HOLD			
0	ISSUED FOR CONSTRUCTION			

REVISIONS

HATCH

ROLE	NAME	SIGNATURE	DATE
DRAFTSPERSON	S. LEY	NR	
DESIGNER	M. MACINTYRE	NR	
CHECKER		Michael MacIntyre	07/06/17
DESIGN COORD.			
RESP. ENG.		R. Butts	07/06/17
LEAD DISC. ENG.			
ENG. MANAGER			
PROJ. MANAGER			

DRAWING APPROVAL STATUS: Approved for Construction

Baffinland

MARY RIVER PROJECT
BAFFINLAND IRON MINES LP

PORT SITE
TM001 FUEL SYSTEM
OVERALL LAYOUT

SCALE 1:750 OR AS NOTED

DWG. No. H353004-48400-240-272-0001

REV 2

SHEET SIZE: A0

DWG. No. H353004-48400-240-272-0002

NOTES:

1. FOR EXISTING PIPING LAYOUT REFER TO DRG: H349000-2613-60-042-0001.
2. FOR NEW CIVIL LAYOUT REFER TO DRG: H353004-00000-220-272-0020-0001.

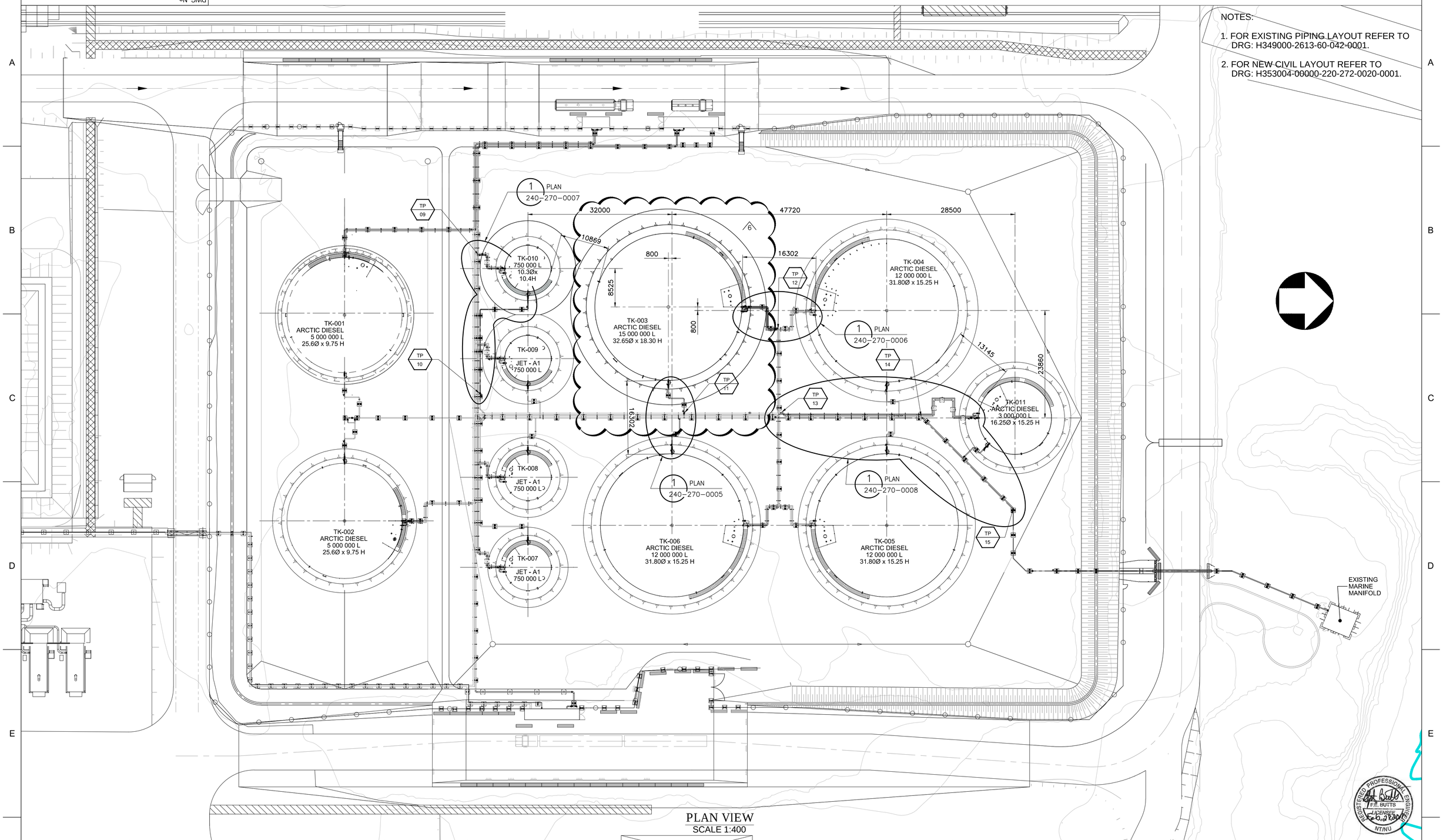

PLAN VIEW
SCALE 1:400

DRAWING No.	DRAWING TITLE
REFERENCE DRAWINGS	

NAME
SIGNATURE
ENG REG NUMBER
REVISION DATE
ORIGINAL DATE
REG. PROFESSIONAL

Reserved space for Issue Reason stamp applied by Document Control

THIS DRAWING WAS PREPARED BY HATCH LTD. ("HATCH") FOR THE EXCLUSIVE USE OF BAFFINLAND IRON MINES LP ("CLIENT") AND ITS USE IS SUBJECT TO THE TERMS AND CONDITIONS OF THE CONTRACT BETWEEN HATCH AND THE CLIENT, INCLUDING ANY LIMITATIONS ON LIABILITY CONTAINED THEREIN. THIS DRAWING AND ITS CONTENTS REMAIN THE INTELLECTUAL PROPERTY OF HATCH SUBJECT TO CLIENT'S ROYALTY-FREE, IRREVOCABLE, PERPETUAL AND NONEXCLUSIVE LICENSE TO USE AND REPRODUCE THE DRAWING FOR PURPOSES CONNECTED WITH THE PROJECT, INCLUDING THE CONSTRUCTION, COMPLETION, MAINTENANCE, EXTENSION, REINSTATEMENT AND REPAIR OF THE PROJECT. THIS DRAWING, AND THE INFORMATION CONTAINED HEREIN, SHALL BE TREATED AS CONFIDENTIAL FOR ALL OTHER PURPOSES AND SHALL NOT BE MODIFIED WITHOUT THE WRITTEN CONSENT OF HATCH.

No.	DESCRIPTION	BY	CHK'D	DATE
6	TK-003 ADDED; ISSUED FOR USE	SJM	SS	18/02/28
5	TK-003 AND PIPING REMOVED	SJM	SS	17/09/17
4	GENERAL UPDATE; ISSUED FOR CONSTRUCTION	S.S.	MM	07/06/17
3	MANIFOLD RELOCATION AND MARINE FUEL LINE ON HOLD	S.S.	MM	06/27/17
2	TK-003 LOCATION REVISED FOR CODE COMPLANCE TO SUIT TANK SHOP DRAWINGS	SJM	MM	06/27/17
1	BACKGROUND UPDATED; ISSUED FOR CONSTRUCTION	SJM	MM	05/25/17
0	ISSUED FOR CONSTRUCTION	SJM	MM	05/09/17

REVISIONS

HATCH

ROLE	NAME	SIGNATURE	DATE
DRAFTSPERSON	J. MCNEIL	J. McNeil	18/02/28
DESIGNER	M. MACINTYRE	Michael MacIntyre	18/02/28
CHECKER	S. SKINNER		18/02/28
DESIGN COORD.	M. MACINTYRE	Michael MacIntyre	18/02/28
RESP. ENG.	F. BUTTS		18/02/28
LEAD DISC. ENG.	F. BUTTS		18/02/28
ENG. MANAGER	J. HOWES		
PROJ. MANAGER	SVEN HEINER		

DRAWING APPROVAL STATUS: Approved for Construction

Baffinland

MARY RIVER PROJECT
BAFFINLAND IRON MINES LP

PORT SITE
TM001 FUEL SYSTEM
PIPING LAYOUT

SCALE: AS NOTED OR AS NOTED
DWG. No.: H353004-48400-240-272-0002
REV: 6
SHEET SIZE: A1