AGNICO EAGLE

August 27rd, 2018

Richard Dwyer
Manager of Licensing
Nunavut Water Board
P.O Box 119
Gjoa Haven, NU X0B 1J0

Re: Agnico Eagle Mines – Meadowbank Division Responses to Freshwater Intake Station Design Report Comments

Dear Mr. Dwyer,

As requested, the following information and comments are intended to address the comments made in the below letters:

- CIRNAC – August 17, 2018, *Crown-Indigenous Relations and Northern Affairs Canada (CIRNAC)Technical Review Comments of the Design Report Fresh Water Intake –Whale Tail Project under Agnico Eagle Mines Limited's Type "A" Water Licence No. 2AM-WTP1826.*

- DFO - August 16, 2018, *Submit comments for project 2AM-WTP1826 for Agnico Eagle Mines Ltd.'s Design Report Fresh Water Intake*

Should you have any questions or require further information, please do not hesitate to contact me.

Best regards,

Manon Turmel
manon.turmel@agnicoeagle.com
819-759-3555 x 4608172
Environmental Compliance Counselor

AGNICO EAGLE

1) **Crown-Indigenous Relations and Northern Affairs Canada (CIRNAC)**

Comment 1: Erosion Control

Reference:

- 2018 Design Report Fresh Water Intake – Whale Tail Project, Document No. 6112-E-132-003-REP-005, Agnico Eagle, July 09, 2018.
- Type 'A' Water Licence No. 2AM-WTP1826.

Comment:
Part D Item 11 of Type 'A' Water Licence No. 2AM-WTP1826 states "the Licensee shall implement sediment and erosion control measures prior to and during Construction, and Operations where necessary, to prevent entry of sediment into Water." The design report does not indicate the erosion control measures that will be used during construction.

Recommendation:
CIRNAC recommends the Licensee identify the erosion control measures that will be used prior to and during Construction both on land and in Nemo Lake.

Agnico Eagle Mines response:

To prevent sediment erosion into Nemo Lake, turbidity barriers will be installed downstream of the freshwater pad. They will be inspected periodically to detect any breach. Water samples will be taken daily downstream of the pad in Nemo Lake and analyzed for total suspended solid.

As for sediment erosion control on land, silt curtains will be installed close to shore. Heavy equipment will remain upstream of the barrier.

Comment 2: Minimize disturbance to terrain, permafrost and drainage

Reference:

- 2018 Design Report Fresh Water Intake – Whale Tail Project, Document No.6112-E-132-003-REP-005, Agnico Eagle, July 09, 2018.
- Type 'A' Water Licence No. 2AM-WTP1826.

Comment:
Part D Item 18 of Type 'A' Water Licence No. 2AM-WTP1826 states "the Licensee shall minimize disturbance to terrain, permafrost and drainage during movement of contractor's equipment and personnel around the site during construction activities".
Section 5.1 and 5.2 of the design report describe the assembly and deployment of the on-ground (above) and submarine pipelines. However, there is no description of the equipment to be used, nor demarcation of where the equipment will be permitted to travel, during construction.

Recommendation:
CIRNAC requests clarification on how the Licensee plans to minimize disturbance to terrain, permafrost and drainage during construction.

Agnico Eagle Mines response:

As presented in Figures 1 and 2 below, equipment for construction will circulate on the access road (in blue). The road links the Freshwater Intake Station to the camp. The crane for the placement of the feed pipe into the Nemo Lake will be located close to the pumping pad (see Figure 1). The pipe will be placed into the lake using the crane to limit erosion and sediment suspension in the lake.

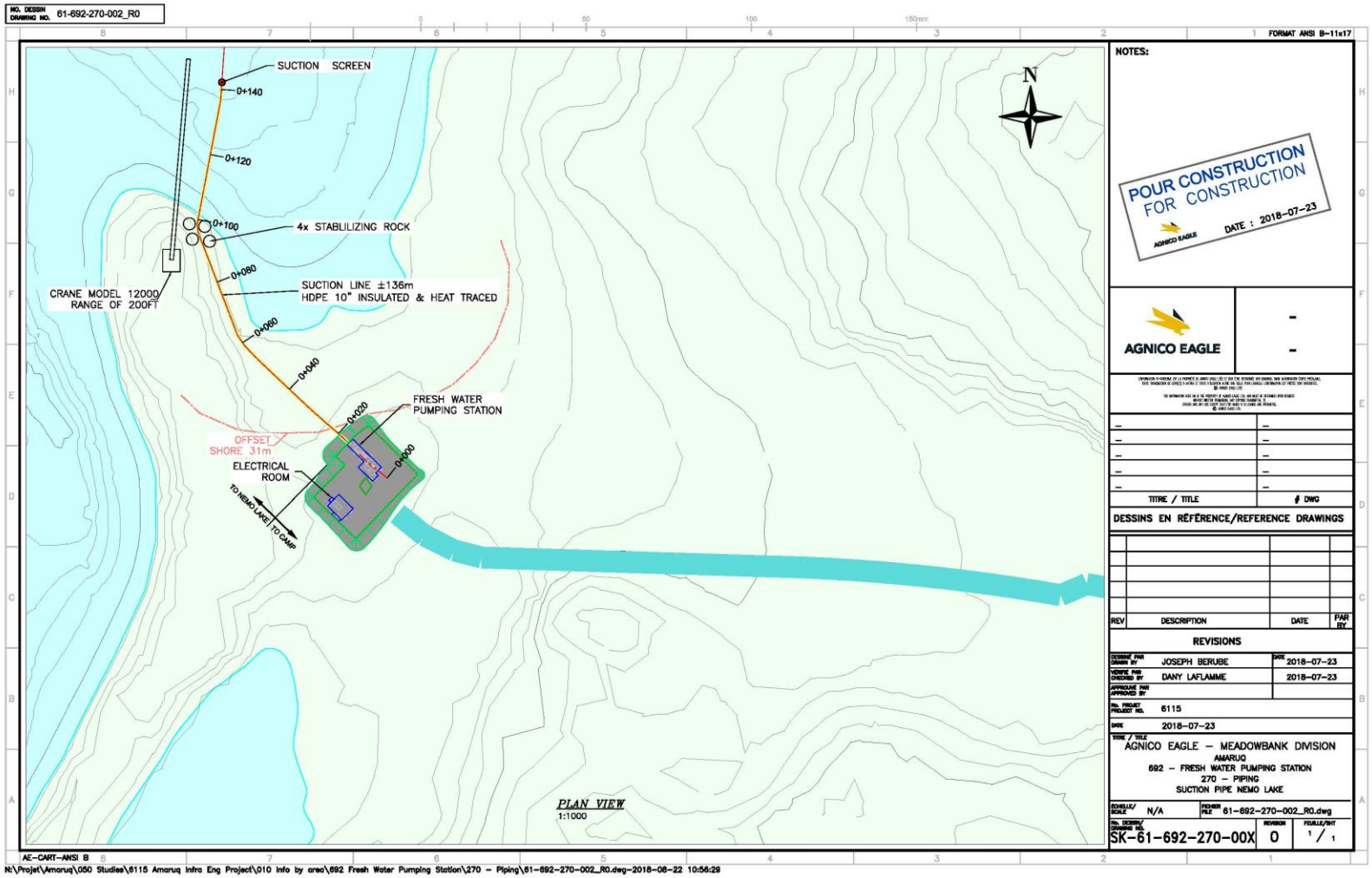

Figure 1: Access road and crane location

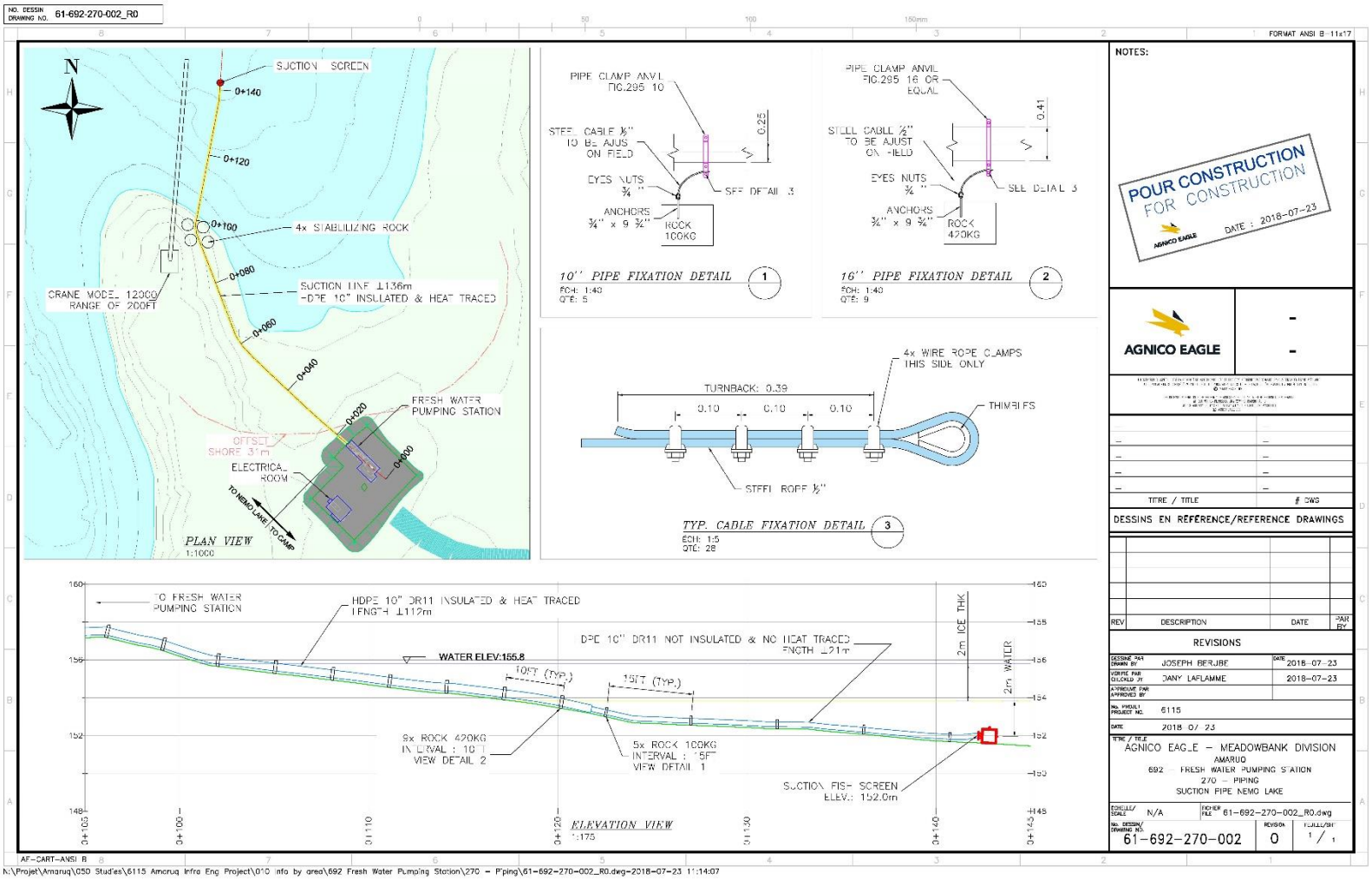

Figure 2: Crane and feed pipe location

Comment 3: Freshwater intake screen size

Reference:

- 2018 Design Report Fresh Water Intake – Whale Tail Project, Document No. 6112-E-132-003-REP-005, Agnico Eagle, July 09, 2018.
- Type 'A' Water Licence No. 2AM-WTP1826.

Comment:
Section 3 and 4 indicate the suction line ends with a screen to ensure that fish are not entrained nor impinged on the screen, as per part E Item 6 of Type 'A' Water Licence No. 2AM-WTP1826.

Recommendation:
CIRNAC requests confirmation that the screen mesh size used also complies with the Department of Fisheries and Oceans fish screen guidelines.

Agnico Eagle Mines response:

The pumping box has been designed in accordance with DFO's Freshwater Intake End-of-Pipe Fish Screen Guideline. The mesh size selected is ½'' (see Figure 3). The design was performed for the anguilliform swimming mode.

AGNICO EAGLE

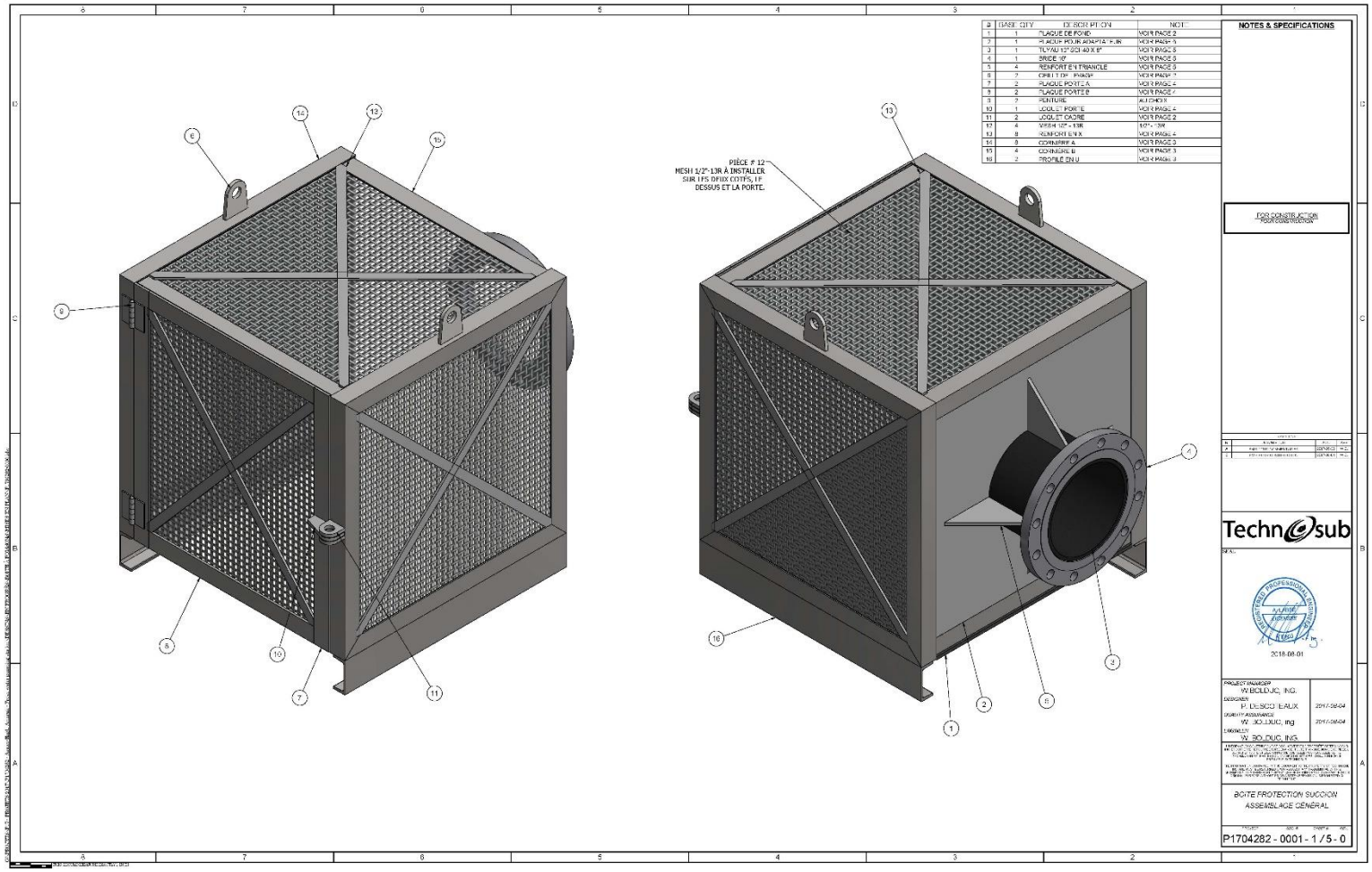

Figure 3: Suction box

AGNICO EAGLE

2) **Department of Fisheries and Oceans Canada (DFO)**

Comment: DFO-FPP acknowledges that AEM has committed to using fish screens on intakes in an effort to avoid the entrainment and impingement of fishes. However, DFO-FPP is unclear what calculations/ data/ information (i.e., species swim speeds, water intake velocities) were used to determine the appropriate size of screens that were proposed by AEM to avoid the entrainment and impingement of the fish at the intakes and on the screens.

In addition, DFO-FPP notes that under AEM's existing Whale Tail Pit Project Fisheries Act Authorization, AEM is required to submit detailed engineering plans to DFO-FPP directly for construction works that have the potential to impact fish and fish habitat, which includes the freshwater jetty. The detailed engineering plans should include mitigation measures to prevent fish entrainment and impingement.

Agnico Eagle Mines response:

Calculations performed for suction box sizing are presented below.

The mesh size selected, ½'' (see Figure 3), will ensure fish are not entrained. Based on the Freshwater Intake End-of-Pipe Fish Screen Guideline, the area required for anguilliform mode for 550 USGPM is 9.8 ft^2. For ½'' mesh opening, the opening % is 57 %. The required area of sieve is thus 17.2 ft^2. The suction box is designed for 23.9 ft^2 sieve area. This will ensure fill are not impinged on the screen/suction box. Detailed engineering of the suction box can be found enclosed with this letter and in Figure 3.

As for engineering plans, they can be found in the design report. Although the initial design proposed included a jetty, the final design has been changed to reduce impacts to fish and fish habitat. The feed pipe of the freshwater pumping station will be placed in water using a crane. The pipe will be anchored to a concrete block (see Figure 2). As a summary, there is no in-water work. As such, impacts to fish and fish habitat are not anticipated. Finally, Agnico Eagle will comply with the Freshwater Intake End-of-Pipe Fish Screen Guideline.

#	BASE QTY	DESCRIPTION	NOTE
1	1	PLAQUE DE FOND	VOIR PAGE 2
2	1	PLAQUE POUR ADAPTATEUR	VOIR PAGE 5
3	1	TUYAU 10" SCH40 X 8"	VOIR PAGE 5
4	1	BRIDE 10"	VOIR PAGE 5
5	4	RENFORT EN TRIANGLE	VOIR PAGE 5
6	2	OEILLT DE LEVAGE	VOIR PAGE 2
7	2	PLAQUE PORTE A	VOIR PAGE 4
8	2	PLAQUE PORTE B	VOIR PAGE 4
9	2	PENTURE	AU CHOIX
10	1	LOQUET PORTE	VOIR PAGE 4
11	2	LOQUET CADRE	VOIR PAGE 2
12	4	MESH 1/2" - 13R	1/2" - 13R
13	8	RENFORT EN X	VOIR PAGE 4
14	8	CORNIÈRE A	VOIR PAGE 3
15	4	CORNIÈRE B	VOIR PAGE 3
16	2	PROFILÉ EN U	VOIR PAGE 3

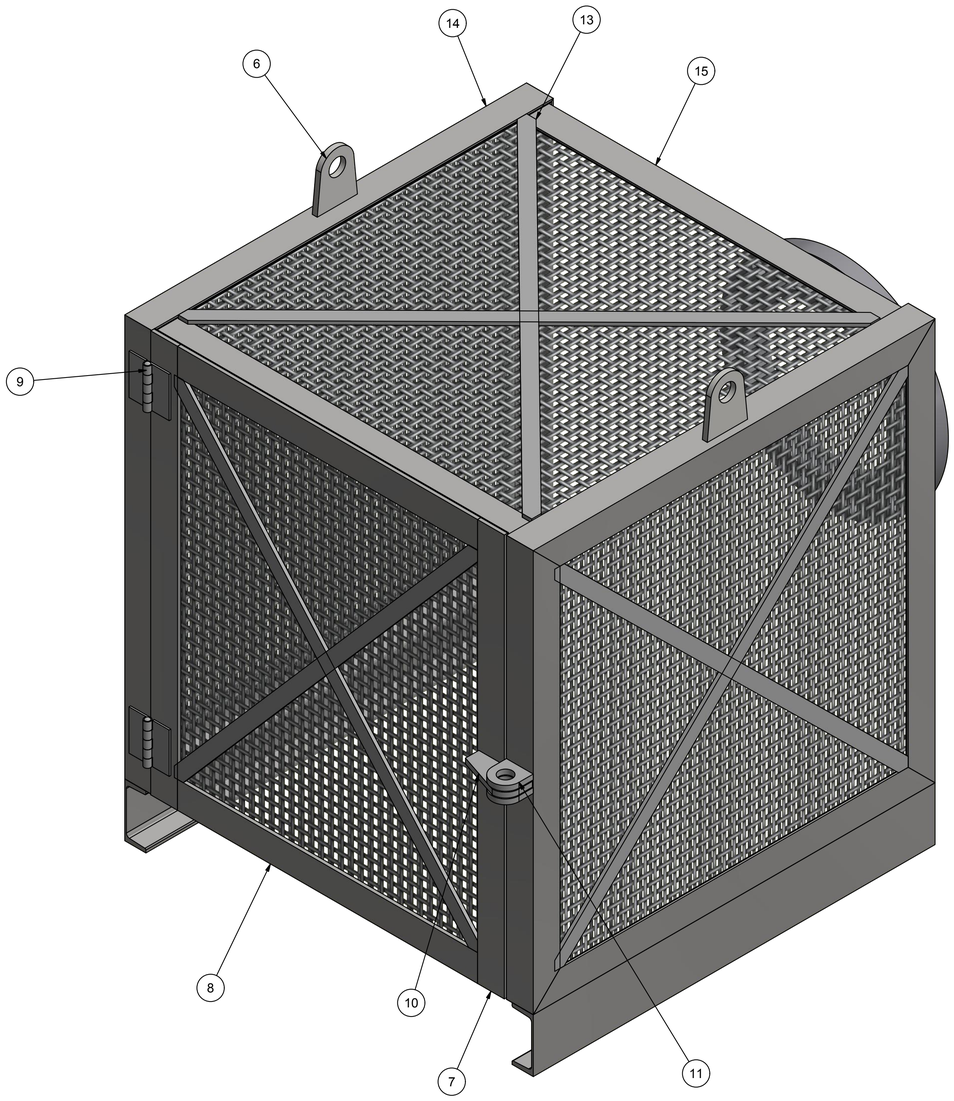

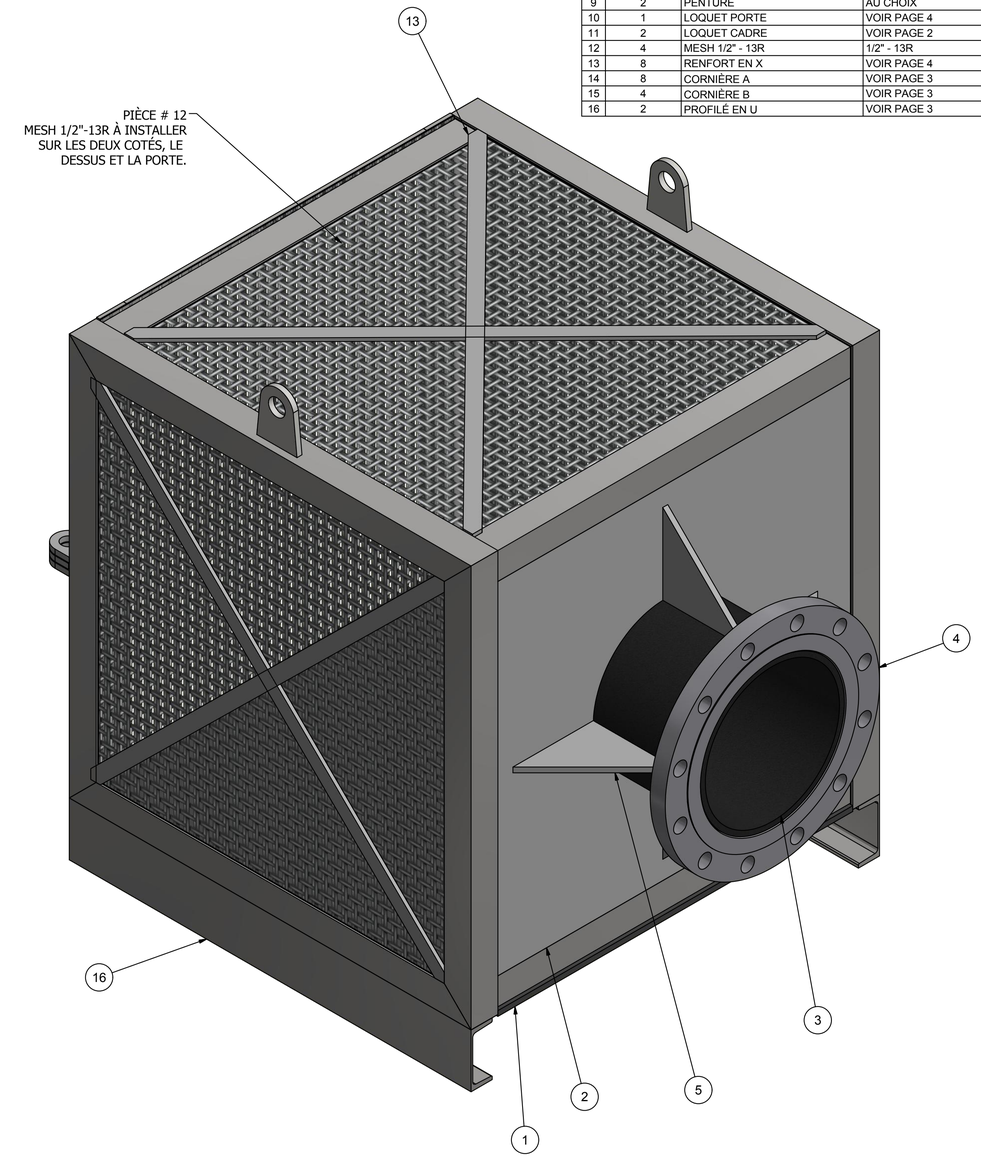

NOTES & SPECIFICATIONS

FOR CONSTRUCTION
POUR CONSTRUCTION

REVISIONS

R	DESCRIPTION	DATE	APP
A	ÉMIS POUR COMMENTAIRES	2017-05-30	W.B.
0	ÉMIS POUR CONSTRUCTION	2017-08-04	W.B.

Technosub

SEAL

REGISTERED PROFESSIONAL ENGINEER
A. LABBÉ
LICENSEE
NUNAVUT

2018-08-01

PROJECT MANAGER
W.BOLDUC, ING.

DESIGNER
P. DESCOTEAUX — *2017-08-04*

QUALITY ASSURANCE
W. BOLDUC, ing. — *2017-08-04*

ENGINEER
W. BOLDUC, ING.

L'INFORMATION CONTENU DANS CE DOCUMENT EST LA PROPRIÉTÉ DE TECHNOSUB INC. ET DOIT ÊTRE RETOURNÉE SUR DEMANDE. TOUTE TRANSMISSION DE COPIE(S) À AUTRUI ET TOUTE UTILISATION AUTRE QUE CELLE POUR LAQUELLE CETTE INFORMATION FUT PRÊTÉE SONT INTERDITES SANS AUTORISATION ÉCRITE PRÉALABLE. © TECHNOSUB

THE INFORMATION CONTAINED IN THIS DOCUMENT IS THE PROPERTY OF TECHNOSUB INC. AND MUST BE RETURNED ON REQUEST. ANY TRANSMITTAL OF THIS INFORMATION TO A THIRD PARTY OR ANY USE OF THIS INFORMATION EXCEPT FOR ITS ORIGINAL PURPOSE WITHOUT PRIOR WRITTEN PERMISSION IS PROHIBITED. © TECHNOSUB

BOITE PROTECTION SUCCION
ASSEMBLAGE GÉNÉRAL

PROJECT	*SEQ. #*	*SHEET #*	*REV.*
P1704282	0001	1 / 5	0

G:\PROJETS P17 - PROJETS 2017\P1704282 - Agnico-Eagle Amarok - Fresh water pumping station\DESSINS EN PROGRÈS\BOITE À POISSONS MISES EN PLAN\P1704282-0000.tdw

THIS SHOULD MEASURE EXACTLY 1 INCH

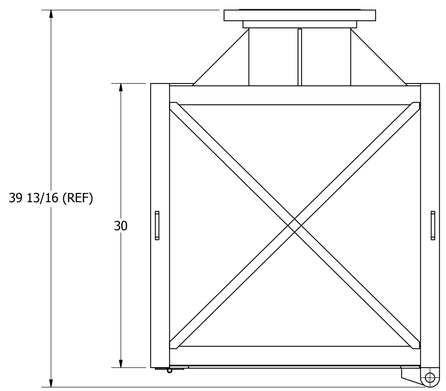

VUE EN PLAN
ECHELLE 1 1/2" = 1'

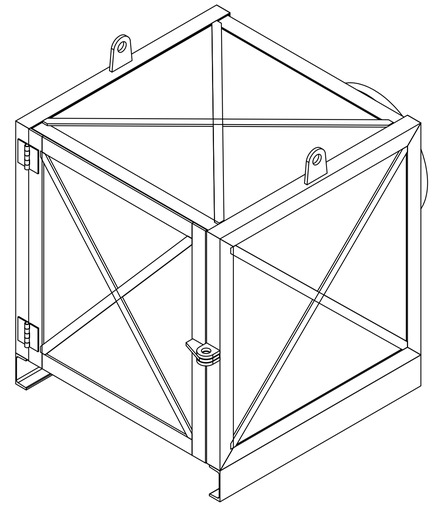

VUE ISOMETRIQUE
ECHELLE : 1 1/2" = 1'

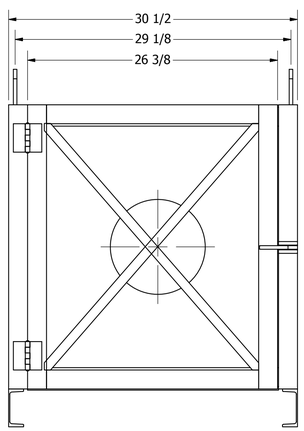

VUE ELEVATION
ECHELLE : 1 1/2" = 1'

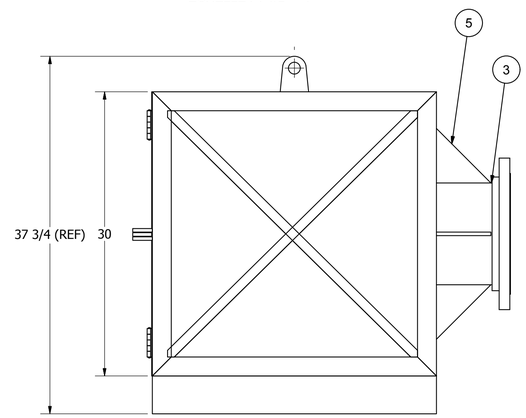

VUE PROFIL DROIT
ECHELLE 1 1/2" = 1'

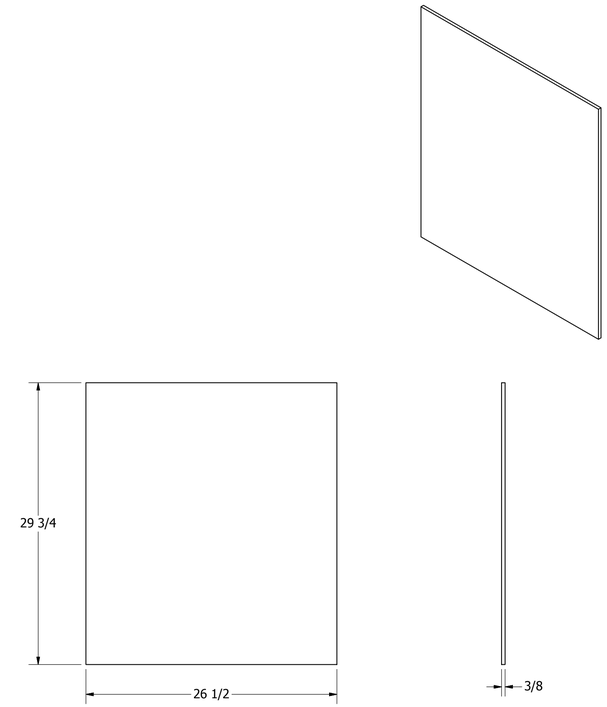

PIÈCE # 1
ECHELLE : 1 1/2" = 1'
PLAQUE 29 3/4" X 26 1/2" X 3/8"
QUANTITÉ : 1

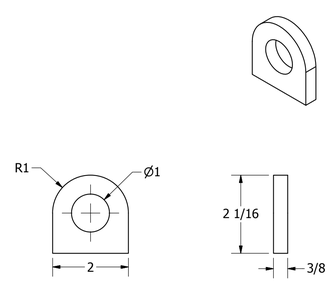

PIÈCE # 11
ECHELLE: 6" = 1'
PLAQUE 2 1/16" X 2" X 3/8"
QUANTITÉ : 2

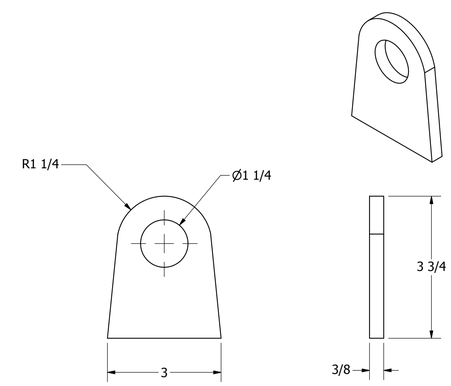

PIÈCE # 6
ECHELLE: 6" = 1'
PLAQUE 3" X 3 3/4" X 3/8"
QUANTITÉ : 2

NOTES & SPECIFICATIONS

SECTION I.

1. ALL DIMENSIONS ARE IN INCHES UNLESS OTHERWISE NOTED.

2. ALL REFERENCES TO COMPLEMENTARY DRAWING SEQUENTIAL NUMBERS IMPLY THE SAME PROJECT NUMBER UNLESS OTHERWISE NOTED.

3. ALL MATERIALS TO BE STANDARD STEEL 44W UNLESS OTHERWISE NOTED.

4. UNSPECIFIED FABRICATION TOLERANCES

6" -	± 1/32"
6" to 12"	± 1/16"
12" +	± 1/8"

5. UNSPECIFIED MACHINING TOLERANCES

6" -	± .010"
6" to 18"	± .015"
18" +	± .020"

6. GENERAL TOLERANCES

X.XXX" ± .002"
X.XX" ± .010"

7. MACHINE ALLOWANCE UNLESS OTHERWISE SPECIFIED.

8. BREAK ALL CORNERS UNLESS OTHERWISE SPECIFIED.

FOR CONSTRUCTION
POUR CONSTRUCTION

Technosub

SEAL

REGISTERED PROFESSIONAL ENGINEER
A. LABBÉ
LICENSEE
NWT/NU

2018-08-01

PROJECT MANAGER W.BOLDUC, ING.	
DESIGNER P. DESCOTEAUX	*2017-08-04*
QUALITY ASSURANCE W. BOLDUC, ing.	*2017-08-04*
ENGINEER W. BOLDUC, ING.	

L'INFORMATION CONTENU DANS CE DOCUMENT EST LA PROPRIÉTÉ DE TECHNOSUB INC. ET DOIT ÊTRE RETOURNÉ SUR DEMANDE. TOUTE TRANSMISSION DE CHIFFRES À AUTRUI ET TOUTE UTILISATION AUTRE QUE CELLE POUR LAQUELLE CETTE INFORMATION FUT PRÊTÉE SONT INTERDITES SANS AUTORISATION ÉCRITE PRÉALABLE. © TECHNOSUB

THE INFORMATION CONTAINED IN THIS DOCUMENT IS THE PROPERTY OF TECHNOSUB INC. AND MUST BE RETURNED UPON REQUEST. ANY TRANSMITTAL OF THIS INFORMATION TO A THIRD PARTY OR ANY USE OF THIS INFORMATION EXCEPT FOR ITS ORIGINAL PURPOSE WITHOUT PRIOR WRITTEN PERMISSION IS PROHIBITED. © TECHNOSUB

ASSEMBLAGE GÉNÉRAL
DÉTAIL ASSEMBLAGE

PROJECT	*SEQ #*	*SHEET #*	*REV.*
P1704282	0001	2 / 5	0

C:\PROJETS\P17-PROJETS 2017\P1704282 - Aamjiwnaang station\DESSINS\EN PROGRÈS\BOITE À POISSONS\MISES EN PLAN\P1704282-0000.idw

THIS SHOULD MEASURE EXACTLY 1 INCH

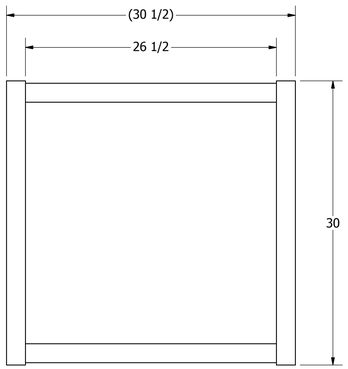

VUE EN PLAN
ECHELLE 1 1/2" = 1'

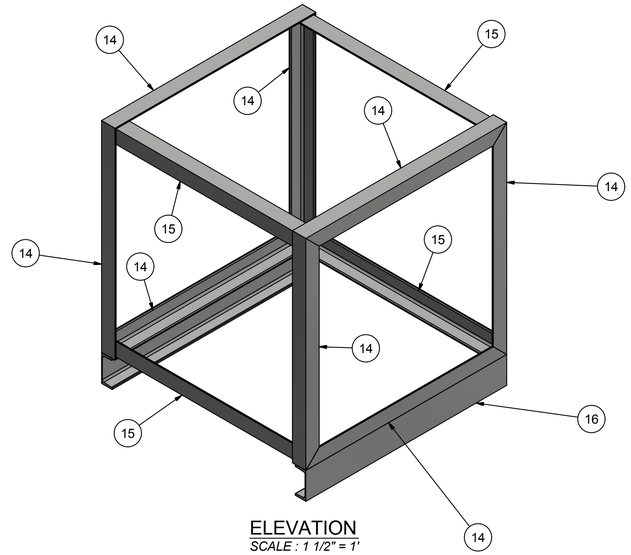

ELEVATION
SCALE : 1 1/2" = 1'

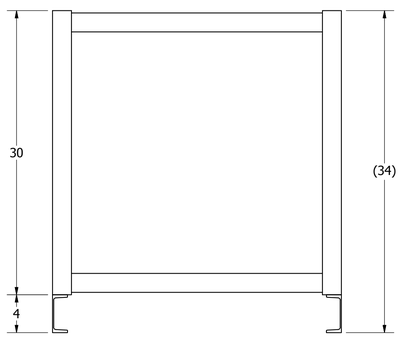

VUE ELEVATION
ECHELLE: 1 1/2" = 1'

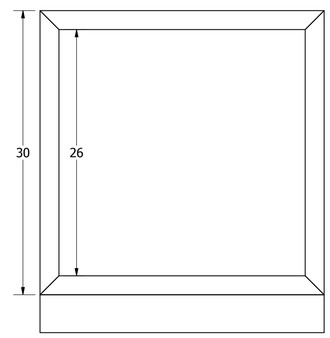

VUE PROFIL DROIT
ECHELLE 1 1/2" = 1'

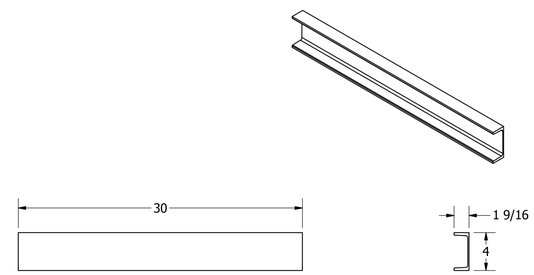

PIÈCE # 16
ECHELLE : 1 1/2" = 1'
PROFILÉ C 4 X 4.5 X 30"
QUANTITÉ : 2

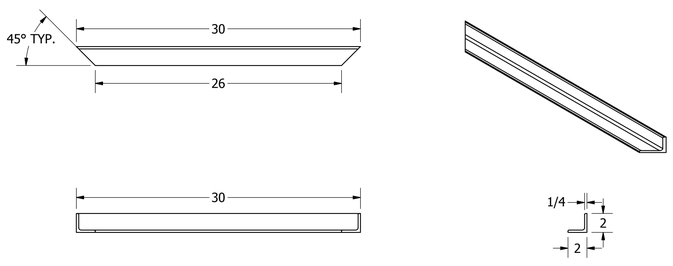

PIÈCE # 14
ECHELLE : 1 1/2" = 1'
CORNIÈRE 2" X 2" X 1/4" X 30"
QUANTITÉ : 8

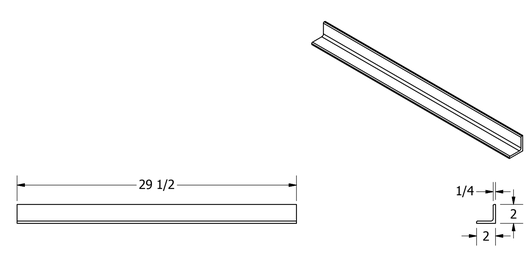

PIÈCE # 15
ECHELLE : 1 1/2" = 1'
CORNIÈRE 2" X 2" X 1/4" X 29.5"
QUANTITÉ : 4

NOTES & SPECIFICATIONS

FOR CONSTRUCTION
POUR CONSTRUCTION

Technosub

SEAL

2018-08-01

PROJECT MANAGER W.BOLDUC, ING.	
DESIGNER P. DESCOTEAUX	*2017-08-04*
QUALITY ASSURANCE W. BOLDUC, ing.	*2017-08-04*
ENGINEER W. BOLDUC, ING.	

L'INFORMATION CONTENU DANS CE DOCUMENT EST LA PROPRIÉTÉ DE TECHNOSUB INC. ET DOIT ÊTRE RETOURNÉE SUR DEMANDE. TOUTE TRANSMISSION DE COPIE(S) À AUTRUI ET TOUTE UTILISATION AUTRE QUE CELLE POUR LAQUELLE CETTE INFORMATION FUT PRÊTÉE SONT INTERDITES SANS AUTORISATION ÉCRITE PRÉALABLE. © TECHNOSUB

THE INFORMATION CONTAINED IN THIS DOCUMENT IS THE PROPERTY OF TECHNOSUB INC. AND MUST BE RETURNED UPON REQUEST. ANY TRANSMITTAL OF THIS INFORMATION TO A THIRD PARTY OR ANY USE OF THIS INFORMATION EXCEPT FOR ITS ORIGINAL PURPOSE WITHOUT PRIOR WRITTEN PERMISSION IS PROHIBITED. © TECHNOSUB

ASSEMBLAGE GÉNÉRAL
DÉTAIL CADRE

PROJECT	*SEQ #*	*SHEET #*	*REV.*
P1704282	0001	3 / 5	0

G:\PROJETS\P17- PROJETS 2017\P1704282 - Aamjiwnaang station\DESSINS\EN PROGRÈS\BOITE À POISSONS\MISES EN PLAN\P1704282-0001.dw

THIS SHOULD MEASURE EXACTLY 1 INCH

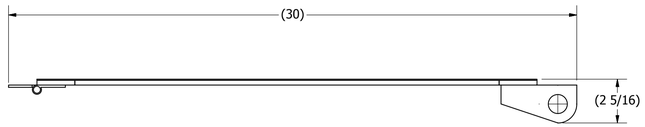

VUE EN PLAN
ECHELLE 3" = 1'

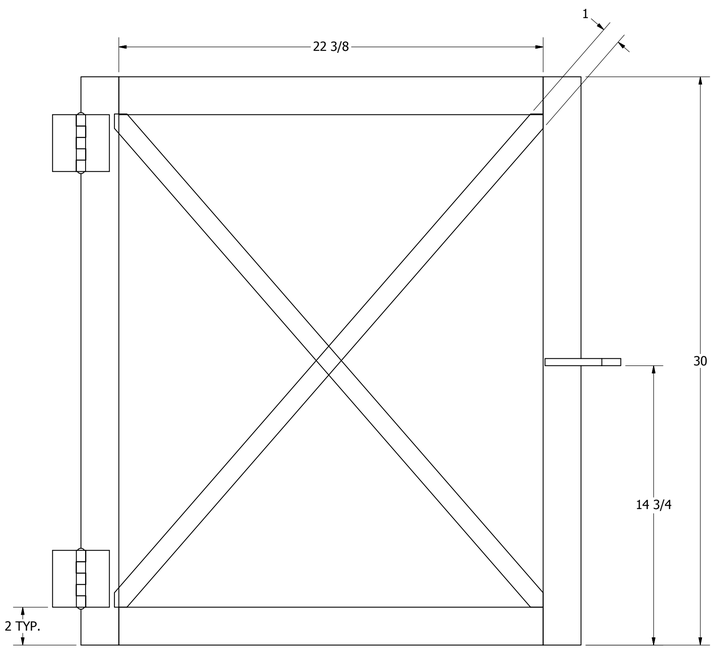

VUE ELEVATION
ECHELLE : 3" = 1'

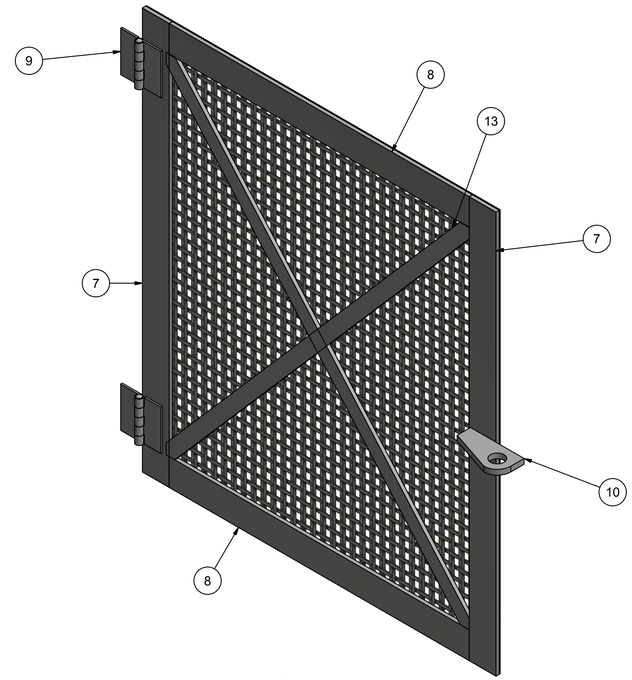

VUE ISOMETRIQUE
ECHELLE : 3" = 1'

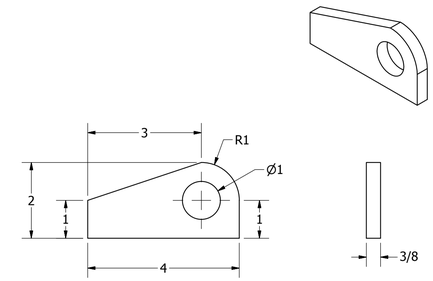

PIÈCE # 10
ECHELLE : 6" = 1'
PLAQUE 4" X 2" X 3/8"
QUANTITÉ : 1

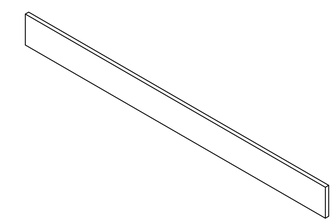

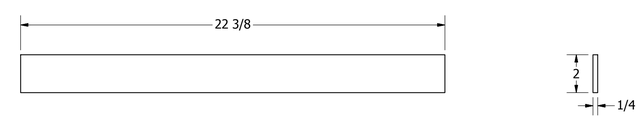

PIÈCE # 8
ECHELLE : 3" = 1'
PLAQUE 2" X 22 3/8" X 1/4"
QUANTITÉ : 2

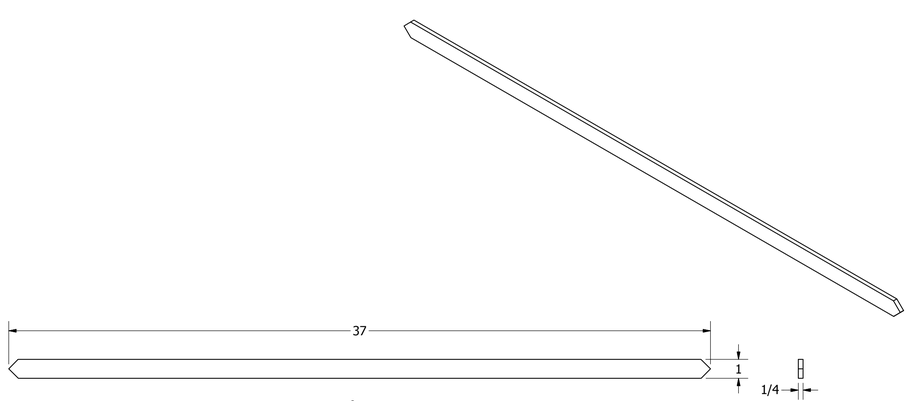

PIÈCE # 13
ECHELLE : 3" = 1'
PLAQUE 1" X 37" X 1/4"
QUANTITÉ : 8

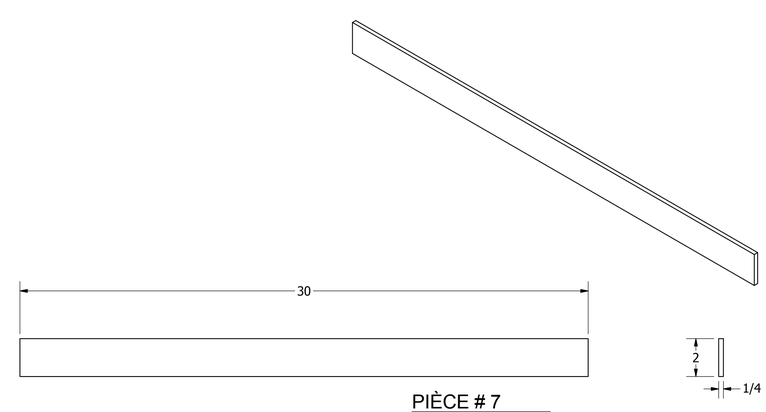

PIÈCE # 7
ECHELLE : 3" = 1'
PLAQUE 2" X 30" X 1/4"
QUANTITÉ : 2

NOTES & SPECIFICATIONS

FOR CONSTRUCTION
POUR CONSTRUCTION

Technosub

SEAL

REGISTERED PROFESSIONAL ENGINEER
A. LABBÉ
LICENSEE
NWT/NU

2018-08-01

PROJECT MANAGER W.BOLDUC, ING.	
DESIGNER P. DESCOTEAUX	*2017-08-04*
QUALITY ASSURANCE W. BOLDUC, ing.	*2017-08-04*
ENGINEER W. BOLDUC, ING.	

L'INFORMATION CONTENU DANS CE DOCUMENT EST LA PROPRIÉTÉ DE TECHNOSUB INC. ET DOIT ÊTRE RETOURNÉ À SA DEMANDE. TOUTE TRANSMISSION DE CHIFFRES À AUTRUI ET TOUTE UTILISATION AUTRE QUE CELLE POUR LAQUELLE CETTE INFORMATION FUT PRÊTÉE SONT INTERDITES SANS AUTORISATION ÉCRITE PRÉALABLE. © TECHNOSUB

THE INFORMATION CONTAINED IN THIS DOCUMENT IS THE PROPERTY OF TECHNOSUB INC. AND MUST BE RETURNED UPON REQUEST. ANY TRANSMITTAL OF THIS INFORMATION TO A THIRD PARTY OR ANY USE OF THIS INFORMATION EXCEPT FOR ITS ORIGINAL PURPOSE WITHOUT PRIOR WRITTEN PERMISSION IS PROHIBITED. © TECHNOSUB

ASSEMBLAGE GÉNÉRAL
DÉTAILS PORTE

PROJECT	SEQ #	SHEET #	REV.
P1704282	0001	4 / 5	0

G:\PROJETS\P17-PROJETS 2017\P1704282 - Aamjiwnaang station\DESSINS\EN PROGRÈS\BOITE À POISSONS\MISES EN PLAN\P1704282-0000.idw

THIS SHOULD MEASURE EXACTLY 1 INCH

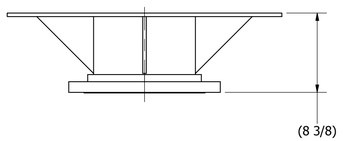

VUE EN PLAN
ECHELLE 1 1/2" = 1'

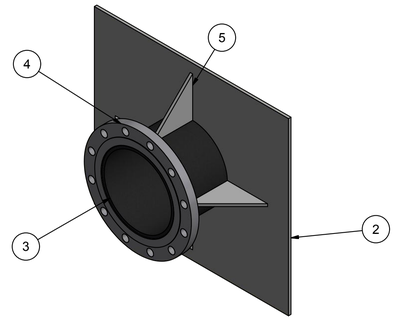

VUE ISOMETRIQUE
ECHELLE : 1 1/2" = 1'

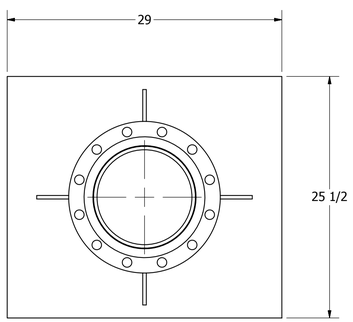

VUE ELEVATION
ECHELLE : 1 1/2" = 1'

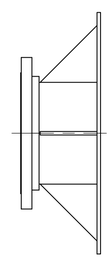

VUE PROFIL DROIT
ECHELLE 1 1/2" = 1'

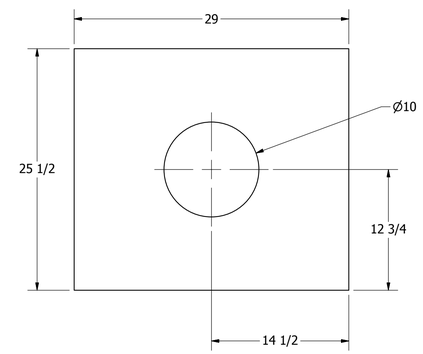

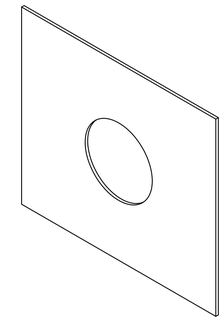

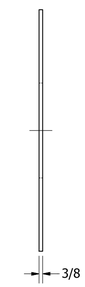

PIÈCE # 2
ECHELLE : 1 1/2" = 1'
PLAQUE 29" X 25 1/2" X 3/8"
QUANTITÉ : 1

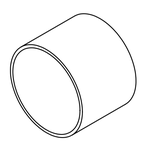

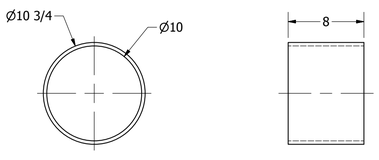

PIÈCE # 3
ECHELLE : 1 1/2" = 1'
TUYAU Ø10" SCH 40 X 8" LG
QUANTITÉ : 1

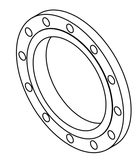

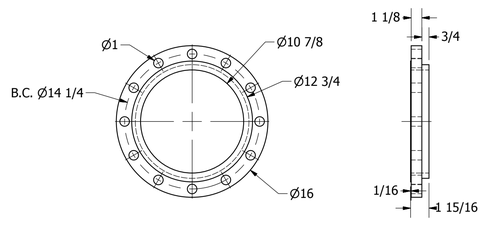

PIÈCE # 4
ECHELLE : 1 1/2" = 1'
PLAQUE Ø16 X 2"
QUANTITÉ : 1

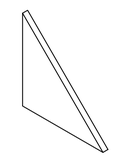

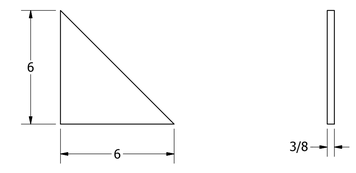

PIÈCE # 5
ECHELLE : 3" = 1'
PLAQUE 6" X 6" X 3/8"
QUANTITÉ : 4

NOTES & SPECIFICATIONS

FOR CONSTRUCTION
POUR CONSTRUCTION

Technosub

SEAL

REGISTERED PROFESSIONAL ENGINEER
A. LABBÉ
LICENSEE
N.T.N.U.

2018-08-01

PROJECT MANAGER	W.BOLDUC, ING.	
DESIGNER	P. DESCOTEAUX	*2017-08-04*
QUALITY ASSURANCE	W. BOLDUC, ing.	*2017-08-04*
ENGINEER	W. BOLDUC, ING.	

L'INFORMATION CONTENUE DANS CE DOCUMENT EST LA PROPRIÉTÉ DE TECHNOSUB INC. ET DOIT ÊTRE RETOURNÉE SUR DEMANDE. TOUTE TRANSMISSION DE CHIFFRES À AUTRUI ET TOUTE UTILISATION AUTRE QUE CELLE POUR LAQUELLE CETTE INFORMATION FUT PRÊTÉE SONT INTERDITES SANS AUTORISATION ÉCRITE PRÉALABLE. © TECHNOSUB

THE INFORMATION CONTAINED IN THIS DOCUMENT IS THE PROPERTY OF TECHNOSUB INC. AND MUST BE RETURNED UPON REQUEST. ANY TRANSMITTAL OF THIS INFORMATION TO A THIRD PARTY OR ANY USE OF THIS INFORMATION EXCEPT FOR ITS ORIGINAL PURPOSE WITHOUT THE PRIOR WRITTEN PERMISSION IS PROHIBITED. © TECHNOSUB

ASSEMBLAGE GÉNÉRAL
DÉTAIL PLAQUE ET BRIDE

PROJECT	*SEQ #*	*SHEET #*	*REV.*
P1704282	0001	5 / 5	0

G:\PROJETS-P17-PROJETS 2017-P1704282 - Aamjiwnaang Eagle Amarok - Fresh water pumping station\DESSINS\EN PROGRÈS-BOITE À POISSONS-MISES EN PLAN\P1704282-0000.idw

THIS SHOULD MEASURE EXACTLY 1 INCH