SNC·LAVALIN
Building what matters

CONSTRUCTION SUMMARY REPORT
Whale Tail Dewatering Phase 2

Agnico Eagle Mines Ltd

Report

6127-648-132-REP-002_R2

February 3, 2021

Authorized Signatory:

REGISTERED PROFESSIONAL ENGINEER
I. GAGNON
LICENSEE
NT/NU
L3940

2021-02-03

Israël Gagnon, P. Eng., MBA
Mechanical Engineer

EXECUTIVE SUMMARY

SNC-Lavalin Stavibel Inc. was retained by Agnico Eagle Mines Limited to prepare a construction summary (as built) report for dewatering phase pumping system at Amaruq site Whale Tail Gold Project, Nunavut. SNC Lavalin previously prepared the construction drawings and specifications as well as the design report for the Dewatering phase pumping system.

SNC-Lavalin Stavibel Inc. wasn't involved in the construction of the Dewatering phase pumping system, the information presented in this report was provided in part by Agnico Eagle.

The construction of the Dewatering phase pumping system was completed in September 2020. The construction monitoring and quality assurance was managed by Agnico Eagle.

This report summarizes the construction as-built information for the Dewatering phase pumping system.

Revision list

Revision			Pages revised	Comments
#	Par	Date		
0	IG/DB	December 2020	all	For internal review
1	IG	January 2021	all	Comments for approval
2	IG	February 2021	all	Final version

TABLE OF CONTENTS

1. Introduction 2
2. Construction Summary 2
2.1. Site location plan 2
2.2. Key personnel 3
2.3. Summary 3
2.4. Dewatering phase 2 Schedule 4
2.5. Mitigation 4
3. Drawings and photographs 4
4. Field decisions 5
5. Construction monitoring 7

Appendices

Appendix A Final construction drawings
Appendix B Dewatering phase construction pictures
Appendix C As-built drawings
Appendix D Mechanical completion
Appendix E QA reports

1. Introduction

Agnico Eagle Mines Limited, Meadowbank Division (AEM) is developing the Whale Tail Project, a satellite deposit located on the Amaruq property (Kivalliq Region of Nunavut, Canada). The Whale Tail Project construction is ongoing and commercial production has started in the third quarter of 2019. To continue mining and milling, AEM is proposing to expand the Whale Tail Project by expanding the Whale Tail pit, developing another open pit called the IVR pit and including underground mining operations. As part of the expansion project, new water management and geotechnical infrastructure was put in place where required for surface water management.

Prior to the construction of these new infrastructure, several lakes must be dewatered first. This dewatering phase 2 pumping system construction summary report is submitted as per Water License 2AM-WTP1830, Part D, Item 16.

This report contains the final design and construction drawings, a summary of construction activities including photographic record before, during and after construction. The as-built drawings, detailed explanation of field decision to reflect any deviations from the original construction drawings/plans and how such deviations may affect performance of engineered structures, a discussion of the mitigation measures implemented during construction and its effectiveness are also presented.

2. Construction Summary

2.1. Site location plan

The Whale Tail Project is located in the Kivalliq Region of Nunavut (65°24’25” N, 96°41’50” W). The 99,878-hectare Amaruq property is located on Inuit-owned and federal crown land, approximately 55 km north of the Meadowbank mine. The Meadowbank mine is accessible from Baker Lake, located 70 kilometers to the south. The next figure presents the affected ponds location.

Figure 1 – ponds location

2.2. Key personnel

Company	Role	Responsibility	Key Personnel	Position
Agnico Eagle Mines Ltd	› Owner	› Manage construction activity › QC › Survey	Jessy Gauthier Alex Gélinas	Mechanical Resident
			Sylvain Chartier Serge Racicot	Construction general Supervisor
			Bruno Roy Marc-André Beaudet	Engineering Lead Construction Lead
Agnico Eagle Mines Ltd	› Owner	› QA during construction	Laurier Collette / Claude Gagné / Arnaud Poirier	Geotechnical Engineer / Water & Tailings Specialist / Intern
			Frederick Bolduc	Geotechnical Coordinator
			Yan Côté / Mark Morin	Engineering Superintendent / Engineering General Supervisor
SNC-Lavalin	› Designer	Provide Engineering Report & Construction › As-built	Dan Chen Anh-Long Nguyen	Engineers
ABF Artic Construction	› Contractor	› Carry out construction activity › Supervise work	Francois Caouette Alexandre Coulombe Pepin	Superintendent ABF

2.3. Summary

Dewatering phase 2 works took place from July 11th, 2020 to October 30th, 2020, with the end of pumping work. The following infrastructures (see appendix A for construction drawings) and equipment were installed for the dewatering phase:

- Waterline 214 Installation, from lake A49 to Whale Tail Attenuation Pond;
- An access road as well as two ramps for dewatering lakes A47-A, A47-B;
- Waterline 200 installation, from lake A47 to line 114 at NE-Dike tie-in;
- An access ramp to dewater lake A49-B;
- An access road and ramps to dewater lakes A50, A51, as well as lake A-P21;
- Waterline 210 installation, from Lake A53 to Whale Tail Attenuation Pond;
- Repurposing Waterline 211 installed for freshet water management to pump water from Lake A53 to Whale Tail South;
- Waterline 215 installation, to pump from A50 toward Lake A53;
- Waterline 217 installation, to pump Lake A51 toward A53;
- Waterline 219 installation, to pump Lake A50, A51 and AP-21 toward A53;
- Waterline 222 installation, From Lake A-P21 to Lake A53;
- Waterline, 206 installation from Lake A49A to Lake A47.

2.4. Dewatering phase 2 Schedule

Once lines were installed, pumping work followed this schedule:

Lake A49

- Lake A49 was pumped to the Water Treatment Plant Attenuation pond using waterline 214 from August 23rd till September 5th.

Lake A49A

- Lake A49A was pumped to lake A47 from September 10th to October 5th, using line 206.

Lake A47

- Lake A47 was pumped to the Water Treatment Plant Attenuation pond from August 13thto October 27th, using waterline 200 and 114 (permanent line for Ph2 water management).

Pond A53

- Pond A53 was pumped to Whale Tail South September 1st to September 14th, using Waterline 211. Then, pond A53 was pumped with Waterline 210 to the Water Treatment Plant Attenuation pond from September 15th to September 27th.

Pond A51

- Pond A51 was pumped to pond A53 from September 13th to September 18th, using waterline 217 and 219.

Pond A50

- Pond A50 was pumped to pond A53 from September 13th to September 17th, using waterline 215 and 219;

Pond AP21

- Pond AP21 was called dry on September 17th, it was pumped to the A53 using waterline 222 and 219;

Pond A52

- Water from Pond A52 evaporated early in the summer, no pumping was required.

2.5. Mitigation

To minimize TSS reporting to the lakes during access roads and pumping pads construction, ramp and pumping pad sections were built not to expand into lake or pond. In lieu, suction lines were extended to the deepest point, this way no ramp were to be built in the lakes or ponds.

No quarrying activities took place to build the access road. During dewatering, turbid water caused by construction activities was pumped to the WT Attenuation pond for treatment in the WTP. No water was used to manage dust emissions from construction activity.

3. Drawings and photographs

The dewatering phase 2 final construction drawings are available in the Appendix A, construction pictures are available in Appendix B. Appendix C present the dewatering system as-built drawings.

4. Field decisions

It was decided to change the dewatering operation strategy and move one pump from one lake to another rather than using multiple pumps at the same time. As a result, only one pump was installed (instead of three) and the pipe network and routing were simplified accordingly (no tee connections).

Jetty were not lengthened to access the deepest parts of all lakes, instead, the pump suction was lengthened. This was the case for lake A49, A50, A51, A-P21.

Jetty to lake A47-C was not built since the lake was dry by mid July.

The following table presents design changes log that took place during waterline construction of the dewatering pipe network. None of these changes had any impact on the performance of the dewatering system.

Table 1 Design changes log

DESIGN CHANGE LOG				PROJECT: PHASE 2 DEWATERING						
ID	DATE	SUBJECT	ITEM	LOCATION	DRAWING OR SPEC REF.	DESIGN	CHANGE	STATUS	BY	NOTES
1	11/07/20	Line routing	Line 648-100-WFR-PC11-0214	A47 Area	61-648-270-202-R2	The line is on the side road 7 from A49 Lake to AP5 Road	Line going in the tundra and onto NE Dikes	Approved	AL	Diamond drill campaign, future work for the ring road in the area on the planned route. Staying North of road 7 is a better path to avoid conflict.
4	18/07/20	Line connection	Lines 648-200-WFR-PC11-0215, '-0217, -'0218	A50 to A53	61-648-270-202-R2	"Tee" connections	"Flange-Unflange" type connections	Agreed "As is"	LC	Much simpler and consitent with planned dewatering operations
3	18/07/20	Line diameter	Line 648-100-WFR-HOSE-0222	AP21 to A52	61-648-270-202-R2	4" flexible	8" HDPE	Agreed "As is"	LC	Approved, will get higher flow for quicker dewatering
5	18/07/20	Line routing	Line 648-100-WFR-HOSE-0222	A52	61-648-270-202-R2	Discharge to A52	Flange directly onto 648-200-WFR-PC11-0219	Approved	LC	Much simpler and consitent with planned dewatering operations
2	18/07/20	Line type & diameter	Line 648-100-WFR-PC11-0214	From A47 to NE Dike	61-648-270-202-R2	12" Mineflex hose	14" HDPE pipe with reducer to 12" Mineflex	Agreed "As is"	LC	
6	07/08/20	Line routing	Line 648-200-WRF-PC17-0200	A47-A49 area	61-648-270-202-R2	Pipe along road 7.	Line split in two components: 1) Line from A47B to line 0214 Mineflex tie-in on NE dike east leg. 2) Line from A49 going either straight to A47 in the tundra or on NE dike connecting to line 0214 mineflex tie-in	Agreed "As is"	LC	
7	07/08/20	Line routing	Line 648-100-WFR-HOSE-0204, Line 648-100-WFR-PC11-0202, Line 648-100-WFR-HOSE-0206	A47-A49 area	61-648-270-202-R2	Lines planned for minor water transfer	Lines canceled from construction mandate. Line already or soon to be installed by operations.	Agreed "As is"	LC	

5. Construction monitoring

The quality assurance and quality control (QA/QC) program put in place by AEM during the construction of the access road, the pumping pads and installation of the HDPE piping and pumps ensured the following:

- NPAG rockfill material is properly assessed and identified for use in the construction of the access roads and pumping pads.
- Ensure proper compaction of the rockfill and granular fill material.
- Monitor the quantity of NPAG rockfill and granular fill used in the construction.
- Provide as-built drawings for the access road and pumping pads, including final structural elevations.
- Identify and place the appropriate diameter and HDPE DR rated pipeline at its proper location on site.
- Verify qualifications of the field technician assembling the piping.
- Provide as-built drawings for the pipping and pump locations.
- Identify and ensure that the appropriate diesel pumps are placed in the proper location on site. Ensure that adequate containment of diesel spills is in place.
- Ensure the water quality monitoring program is in place to monitor TSS and water turbidity.

The deficiency log in Appendix D presents corrections made following lines inspection during the dewatering work. Weekly QA reports can be found in Appendix E, this appendix also include QC, POV and Mechanical completion documents.

Appendix A

Final construction drawings

NO. DESSIN DRAWING NO. 61–648–200–202

FORMAT ARCHD

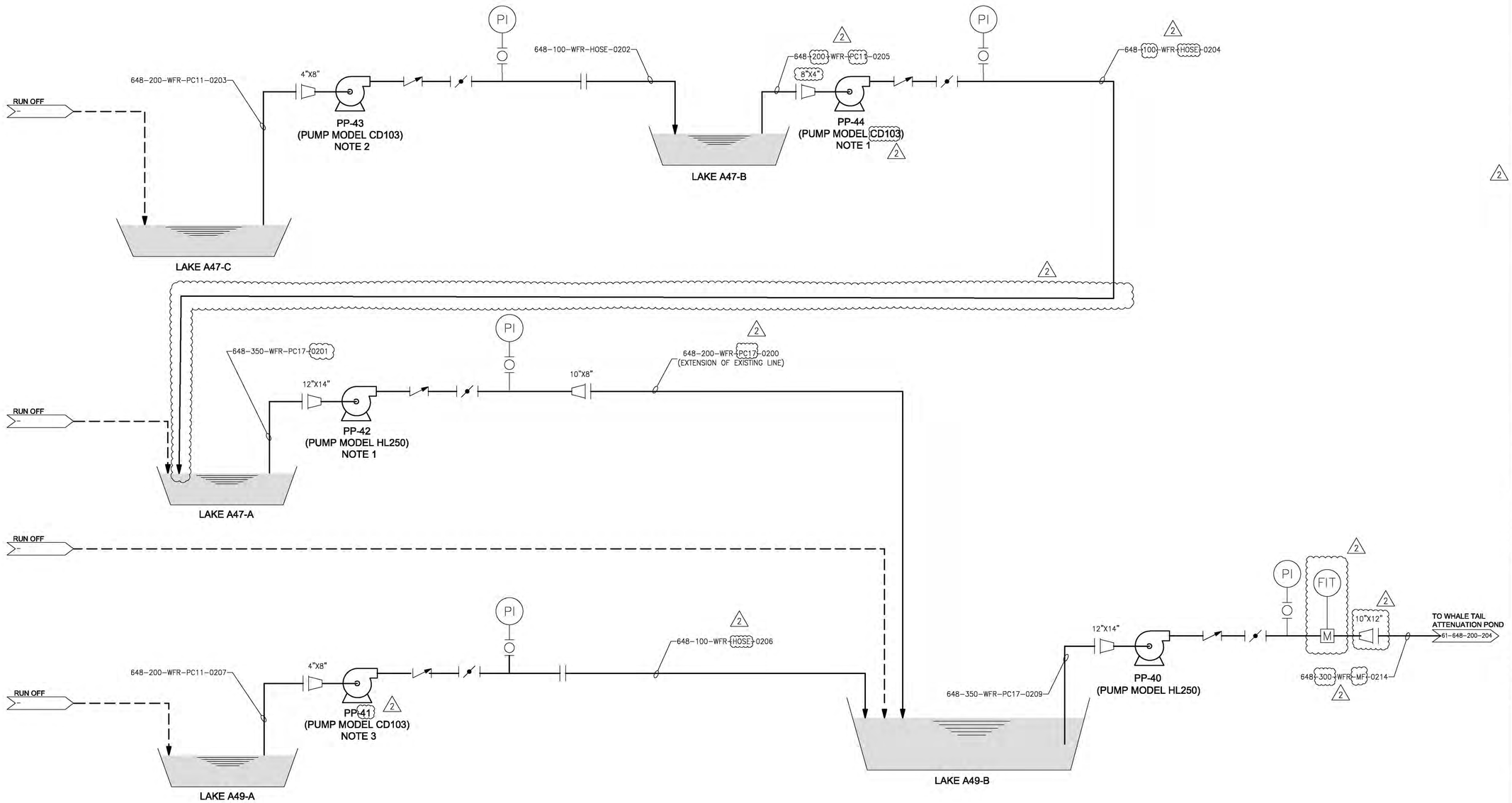

PLAN CLÉ
KEY PLAN

SNC·LAVALIN

Mining & Metallurgy
5500, des Galeries Blvd., bur. 200, Quebec (Quebec), Canada G2K 2E2
Telephone: (418) 621–5500, Fax: (418) 621–8887

PROJECT No	SUBDIVISION	SUBJECT	SERIAL	REV.
668284	8000	49 D1	0001	E02

NOTES GÉNÉRALES / GENERAL NOTES

NOTES :

1. DEPENDING ON THE DEWATERING SEQUENCE, PUMP PP-44 COULD BE RE-USED FOR PUMP PP-41.
2. TO DEWATER LAKE A47-C, TWO CD103 PUMPS ARE REQUIRED TO PROVIDE A TOTAL DEWATERING FLOW RATE OVER 300 M3/H APPROX. TO ENSURE THAT IT OPERATES WITHIN ITS PUMP CURVE. ALTERNATIVELY, A TRASH PUMP COULD BE USED TO DEWATER THIS LAKE IF AVAILABLE.
3. DEWATERING OF LAKE A49-A SHALL OCCUR AFTER DEWATERING OF LAKE A47-C.

LEGEND:

——— PRIMARY STREAM
– – – – INTERMITTENT STREAM
|| FLANGED CONNECTION

DESSINS EN RÉFÉRENCE / REFERENCE DRAWINGS

TITRE / TITLE	# DWG

AGNICO EAGLE

REV.	DATE	DESCRIPTION	PAR/BY	APP.	CLIENT
R2	2020–07–09	ISSUED FOR DESIGN	D.C.	A.L.N.	A.L.
R1	2020–05–15	ISSUED FOR DESIGN	D.C.	A.L.N.	A.L.
R0	2020–03–20	ISSUED FOR DESIGN	D.C.	A.L.N.	A.L.
RB	2020–03–18	ISSUED FOR CLIENT COMMENTS	D.C.	A.L.N.	A.L.
RA	2020–03–02	ISSUED FOR COMMENTS	D.C.	A.L.N.	A.L.

REVISIONS

PERMIT TO PRACTICE
SNC-LAVALIN INC.
Signature NAME
Date DATE 2020-07-15
PERMIT NUMBER: P 260
The Association of Professional Engineers, Geologists and Geophysicists of NWT/NU

TITRE / TITLE
AGNICO EAGLE – AMARUQ DIVISION
648 – DEWATERING

200 – PROCESS FLOWSHEET
AMARUQ DEWATERING PHASE
LAKES A47 & A49

DESSINÉ PAR DRAWN BY	M. MOVILA	DATE 2020–03–02
VERIFIÉ PAR CHECKED BY	D. CHEN	2020–03–02
APPROUVÉ PAR APPROVED BY	A.L. NGUYEN	2020–03–02
ÉCHELLE SCALE	DATE 2020–03–02	
NO. DESSIN DRAWING NO.	61–648–200–202	
NO. PROJET PROJECT NO. 6127	REVISION R2	FEUILLE / SHT 1 / 1

DERNIÈRE SAUVEGARDE: 2020/07/09 – 9:35am
CHEMIN: T:\pro\668284 WNGI Phase 2 Detailed Engineering\40_INGÉNIERIE\40_DD_Dessins\PFD – dewatering\61–648–200–202 .dwg

AE–CART–ARCH D

FILE NO. 61–648–200–202 .dwg

NO. DESSIN DRAWING NO. 61-648-200-203

FORMAT ARCHD

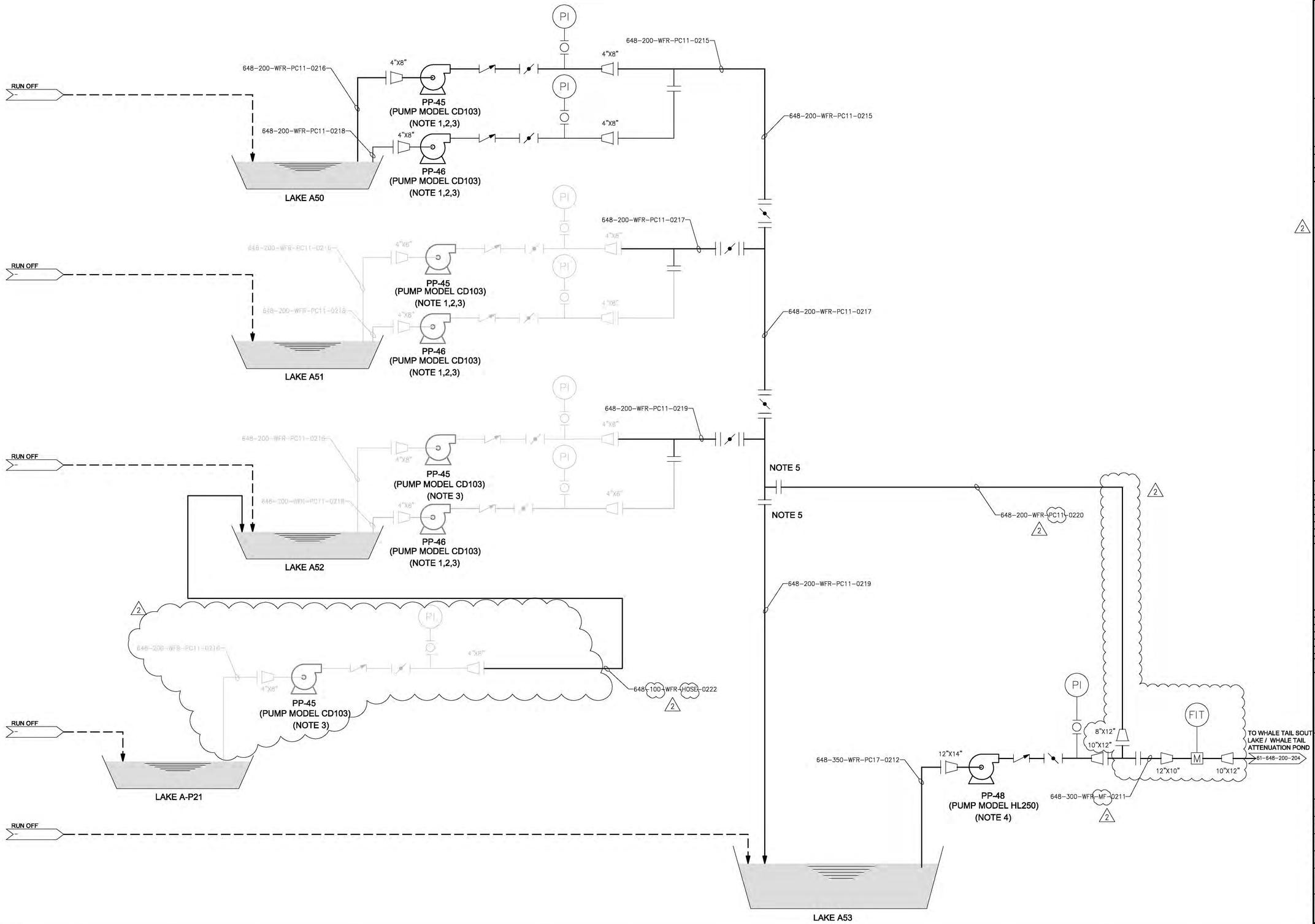

PLAN CLÉ
KEY PLAN

SNC·LAVALIN

Mining & Metallurgy
5500, des Galeries Blvd., bur. 200, Quebec (Quebec), Canada G2K 2E2
Telephone: (418) 621-5500, Fax: (418) 621-8887

PROJECT No	SUBDIVISION	SUBJECT	SERIAL	REV.
668284	8000	49 D1	0002	E02

NOTES GÉNÉRALES / GENERAL NOTES

NOTES :

1. PUMP PP45 AND PP46 SHALL BE USED TO DEWATER SEQUENTIALLY LAKE A50, A51 AND A52.
2. TWO CD103 PUMPS ARE REQUIRED TO PROVIDE A TOTAL DEWATERING FLOW RATE OVER 300 M3/H APPROX. TO ENSURE THAT IT OPERATES WITHIN ITS PUMP CURVE.
3. DEPENDING ON THE LAKE DEWATERING SEQUENCE, PUMPS PP41 AND PP43 COULD BE USED TO DEWATER LAKE A50, A51, A52 AND A-P21.
4. DEPENDING ON THE LAKE DEWATERING SEQUENCE, PP40 OR PP44 COULD BE USED TO DEWATER LAKE A53.
5. CONNECTION TO BY-PASS LINES SHALL BE DONE BY FLANGE TO FLANGE DISCONNECTION AND RECONNECTION.

LEGEND:

——— PRIMARY STREAM

- - - - INTERMITTENT STREAM

|| FLANGED CONNECTION

DESSINS EN RÉFÉRENCE / REFERENCE DRAWINGS

TITRE / TITLE	# DWG

AGNICO EAGLE

REV.	DATE	DESCRIPTION	PAR/BY	APP.	CLIENT
R2	2020-07-09	ISSUED FOR DESIGN	D.C.	A.L.N.	A.L.
R1	2020-03-15	ISSUED FOR DESIGN	D.C.	A.L.N.	A.L.
R0	2020-03-20	ISSUED FOR DESIGN	D.C.	A.L.N.	A.L.
RB	2020-03-06	ISSUED FOR CLIENT COMMENTS	D.C.	A.L.N.	A.L.
RA	2020-03-02	ISSUED FOR COMMENTS	D.C.	A.L.N.	A.L.

REVISIONS

PERMIT TO PRACTICE
SNC-LAVALIN INC.
Signature NAME
Date DATE 2020-07-13
PERMIT NUMBER: P 260
The Association of Professional Engineers, Geologists and Geophysicists of NWT/NU

TITRE / TITLE
AGNICO EAGLE – AMARUQ DIVISION
648 – DEWATERING

200 – PROCESS FLOWSHEET
AMARUQ DEWATERING PHASE
LAKES A50, A51, A52 & A53

DESSINÉ PAR DRAWN BY	M. MOVILA	DATE 2020-03-02
VERIFIÉ PAR CHECKED BY	D. CHEN	2020-03-02
APPROUVÉ PAR APPROVED BY	A.L. NGUYEN	2020-03-02
ÉCHELLE SCALE	DATE 2020-03-02	

NO. DESSIN DRAWING NO. 61-648-200-203

NO. PROJET PROJECT NO.	REVISION	FEUILLE / SHT
6127	R2	1 / 1

AE-CART-ARCH D

FILE NO. 61-648-200-203.dwg

DERNIÈRE SAUVEGARDE: 2020/07/09 – 9:33am
CHEMIN: T:\proj\668284 WMGI Phase 2 Detailed Engineering\40_INGÉNIERIE\40_D0_Dessins\PFD – dewatering\61-648-200-203.dwg

NO. DESSIN DRAWING NO. 61–648–200–204

FORMAT ARCHD

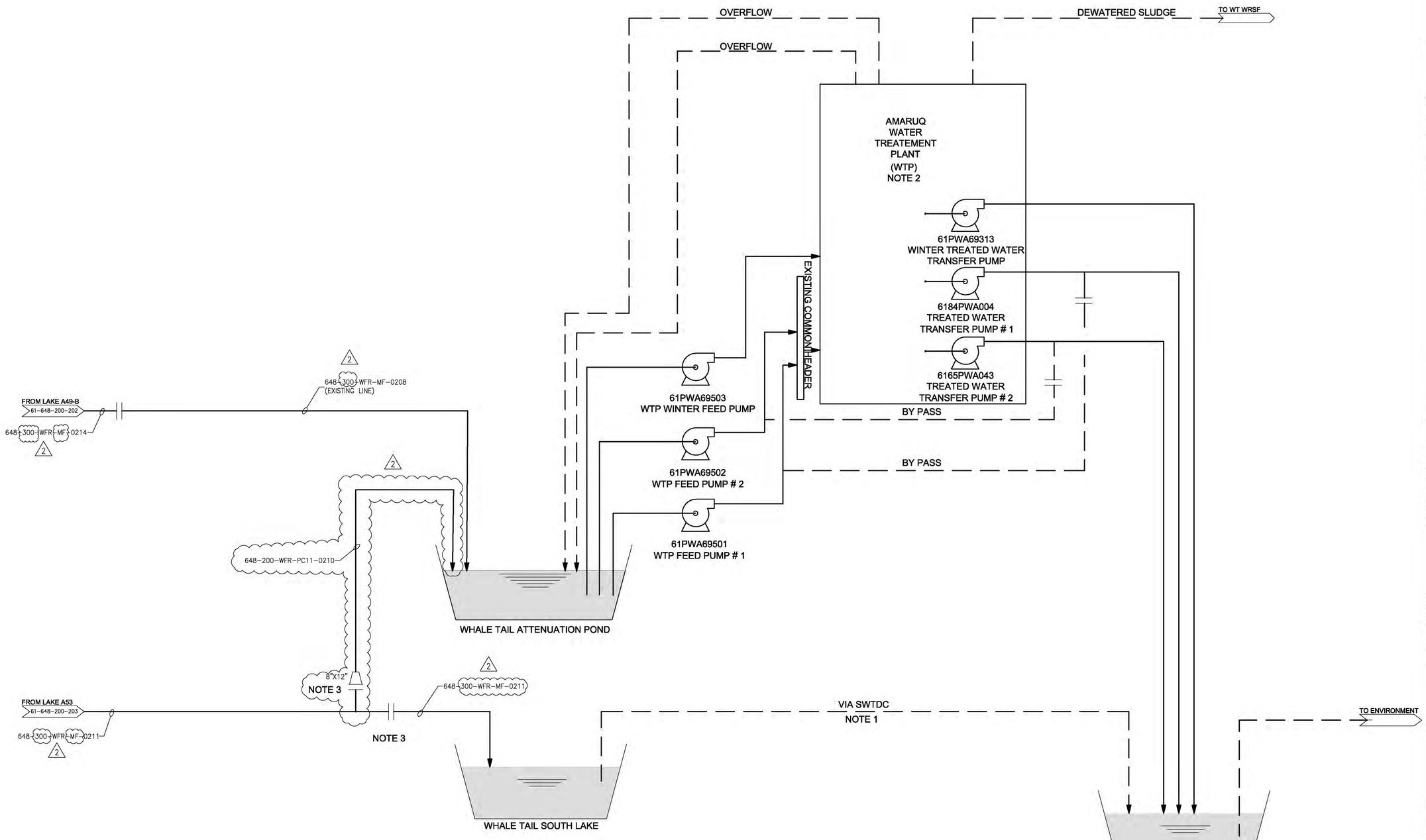

PLAN CLÉ
KEY PLAN

SNC·LAVALIN

Mining & Metallurgy
5500, des Galeries Blvd., bur. 200, Quebec (Quebec), Canada G2K 2E2
Telephone: (418) 621–5500, Fax: (418) 621–8887

PROJECT No	SUBDIVISION	SUBJECT	SERIAL	REV.
668284	8000	49 D1	0003	E02

NOTES GÉNÉRALES / GENERAL NOTES

NOTES :

1. WHALE TAIL SOUTH LAKE SHALL OVERFLOW TO MAMMOTH LAKE VIA THE SOUTH WHALE TAIL DIVERSION CHANNEL (SWTDC).
2. THIS DRAWING SHOWS ONLY THE TIE-IN POINTS OF THE AMARUQ WTP.
3. CONNECTION TO BY-PASS LINES SHALL BE DONE BY FLANGE TO FLANGE DISCONNECTION AND RECONNECTION.

LEGEND:

PRIMARY STREAM
INTERMITTENT STREAM
FLANGED CONNECTION

DESSINS EN RÉFÉRENCE / REFERENCE DRAWINGS

TITRE / TITLE	# DWG

AGNICO EAGLE

REV.	DATE	DESCRIPTION	PAR/BY	APP.	CLIENT
R2	2020–07–09	ISSUED FOR DESIGN	D.C.	A.L.N.	A.L.
R1	2020–05–15	ISSUED FOR DESIGN	D.C.	A.L.N.	A.L.
R0	2020–03–20	ISSUED FOR DESIGN	D.C.	A.L.N.	A.L.
RB	2020–03–06	ISSUED FOR CLIENT COMMENTS	D.C.	A.L.N.	R.B.
RA	2020–03–02	ISSUED FOR COMMENTS	D.C.	A.L.N.	A.L.

REVISIONS

PERMIT TO PRACTICE
SNC-LAVALIN INC.
Signature NAME
Date DATE 2020-07-13
PERMIT NUMBER: P 260
The Association of Professional Engineers, Geologists and Geophysicists of NWT/NU

TITRE / TITLE
AGNICO EAGLE – AMARUQ DIVISION
648 – DEWATERING

200 – PROCESS FLOWSHEET
AMARUQ DEWATERING PHASE
WT ATTENUATION POND, WT SOUTH LAKE
& MAMMOTH LAKE

DESSINÉ PAR DRAWN BY	M. MOVILA	DATE 2020–03–02
VERIFIÉ PAR CHECKED BY	D. CHEN	2020–03–02
APPROUVÉ PAR APPROVED BY	A.L. NGUYEN	2020–03–02
ÉCHELLE SCALE	DATE 2020–03–02	

NO. DESSIN DRAWING NO.
61–648–200–204

NO. PROJET PROJECT NO.	REVISION	FEUILLE / SHT
6127	R2	1 / 1

DERNIÈRE SAUVEGARDE: 2020/07/09 – 9:25am
CHEMIN: T:\pro\668284 WNGI Phase 2 Detailed Engineering\40_INGÉNIERIE\40_DD_Dessins\PFD – dewatering\61–648–200–204.dwg

AE–CART–ARCH D

FILE NO. 61–648–200–204.dwg

NO. DESSIN DRAWING NO. 61-648-270-202

FORMAT ARCHD

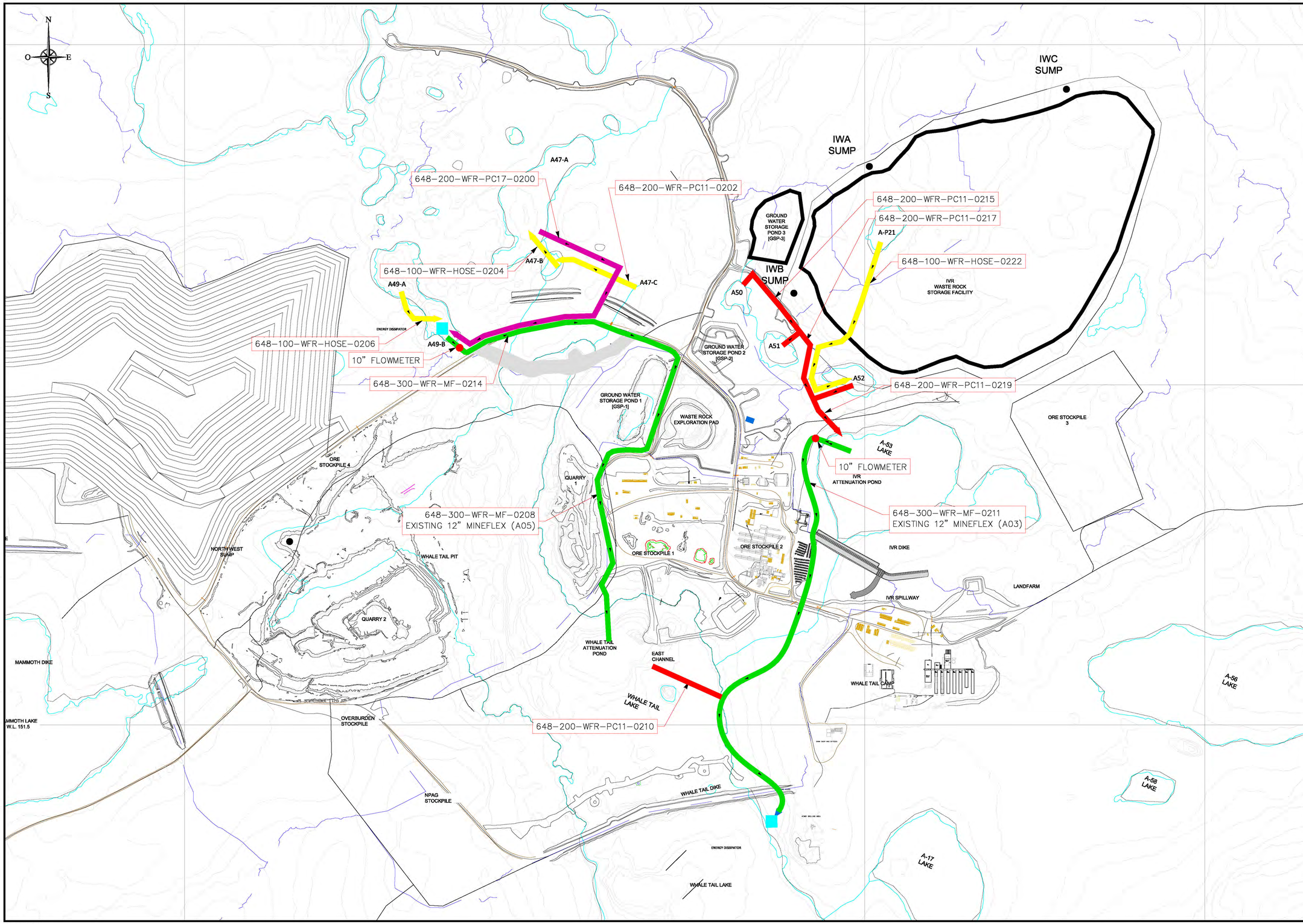

PLAN CLÉ
KEY PLAN

PROJECT No	SUBDIVISION	SUBJECT	SERIAL	REV.
668284	8000	46 DD	0001	E02

NOTES GÉNÉRALES / GENERAL NOTES

NOTES :

1. ONLY PUMP DISCHARGE LINES ARE SHOWN. PUMP SUCTION LINES ARE NOT SHOWN.
2. DEPENDING ON THE DEWATERING SEQUENCE, PUMPS AND LINES CAN BE MOVED FROM ONE AREA TO ANOTHER.
3. PIPING ARRANGEMENT SHOWN ON THE LAYOUT CAN BE FIELD ADJUSTED BASED ON SITE CONDITIONS.
4. FLOW METER LOCATION IS APPROXIMATE AND CAN BE FIELD ADJUSTED BASED ON SITE CONDITIONS.

LEGEND:

- 4" NON-INSULATED HOSE
- 8" NOMINAL NON-INSULATED (DR11)
- 8" NOMINAL NON-INSULATED (DR17)
- 12" MINEFLEX HOSE
- ENERGY DISSIPATOR

DESSINS EN RÉFÉRENCE / REFERENCE DRAWINGS

TITRE / TITLE	# DWG
—	—
—	—
—	—
—	—
—	—
—	—

AGNICO EAGLE

REV.	DATE	DESCRIPTION	PAR/BY	APP.	CLIENT
R2	2020-07-09	ISSUED FOR DESIGN	D.C.	A.L.N.	A.L.
R1	2020-05-15	ISSUED FOR DESIGN	D.C.	A.L.N.	A.L.
R0	2020-04-01	ISSUED FOR DESIGN	M.M	A.L.N.	A.L.
RB	2020-03-19	ISSUED FOR CLIENT COMMENTS	M.M.	A.L.N.	A.L.
RA	2020-03-10	ISSUED FOR INEERNAL COMMENTS	M.M.	A.L.N.	A.L

REVISIONS

PERMIT TO PRACTICE
BRC-LAVALIN INC.
Signature NAME
Date DATE 2020-07-13
PERMIT NUMBER: P 260
The Association of Professional Engineers, Geologists and Geophysicists of NWT/NU

TITRE / TITLE

AGNICO EAGLE – AMARUQ DIVISION
695 – WATER MANAGEMENT
270 – PIPING

PLAN VIEW
AMARUQ DEWATERING PHASE
PIPING LAYOUT

DESSINÉ PAR DRAWN BY	MARIUS MOVILA	DATE 200-03-11
VERIFIÉ PAR CHECKED BY	ANH-LONG NGUYEN	200-03-11
APPROUVÉ PAR APPROVED BY	ALEXANDRE LAVALLÉE	200-03-11
ÉCHELLE SCALE	AS SHOWN	DATE 200-03-11

NO. DESSIN DRAWING NO. 61-648-270-202

NO. PROJET PROJECT NO.	REVISION	FEUILLE / SHT
6127	R2	1 / 1

AE-CART-ARCH D

T:\pro\668284 WMG Phase 2 Detailed Engineering\40_DD_DESSINS\8000\668284-8000-46DD-0001-E02 (61-648-270-202).dwg-2013-02-19 12:48:32

FILE NO.

NO. DESSIN DRAWING NO. 61-648-230-200

FORMAT ARCHD

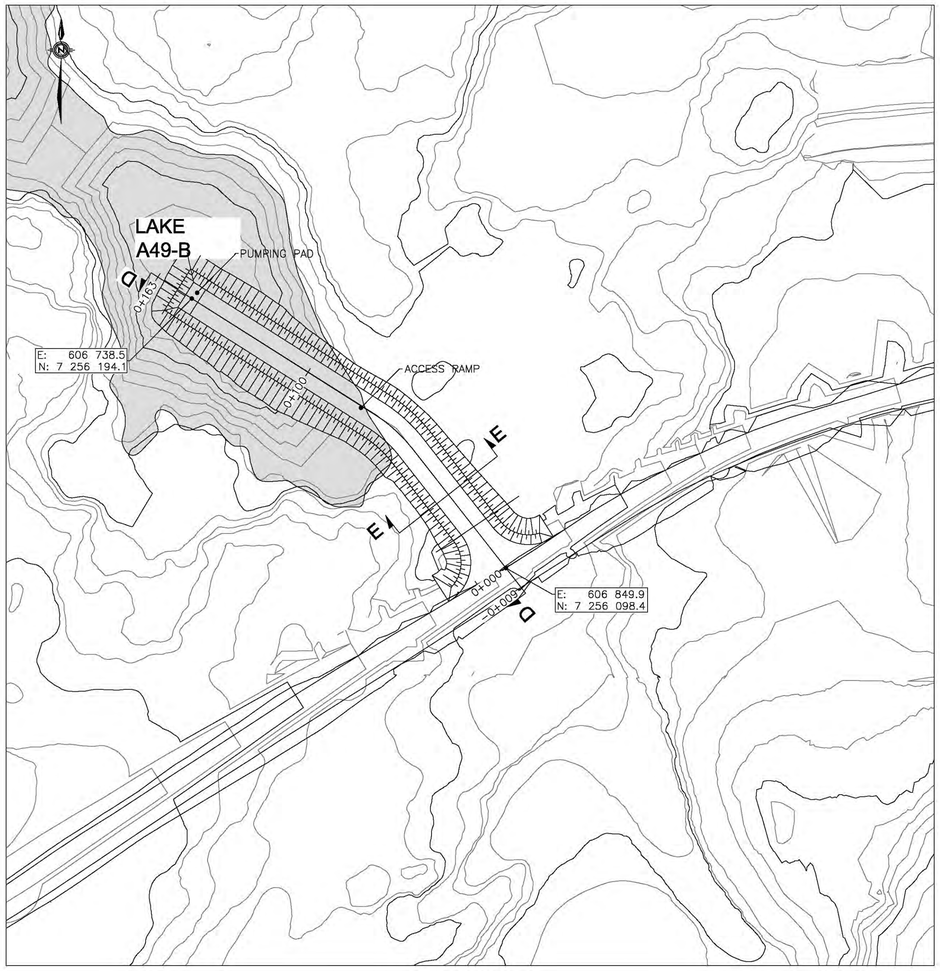

PLAN VIEW
ACCESS RAMP AND PUMPING PAD
LAKE A49-B
SCALE : 1: 1000

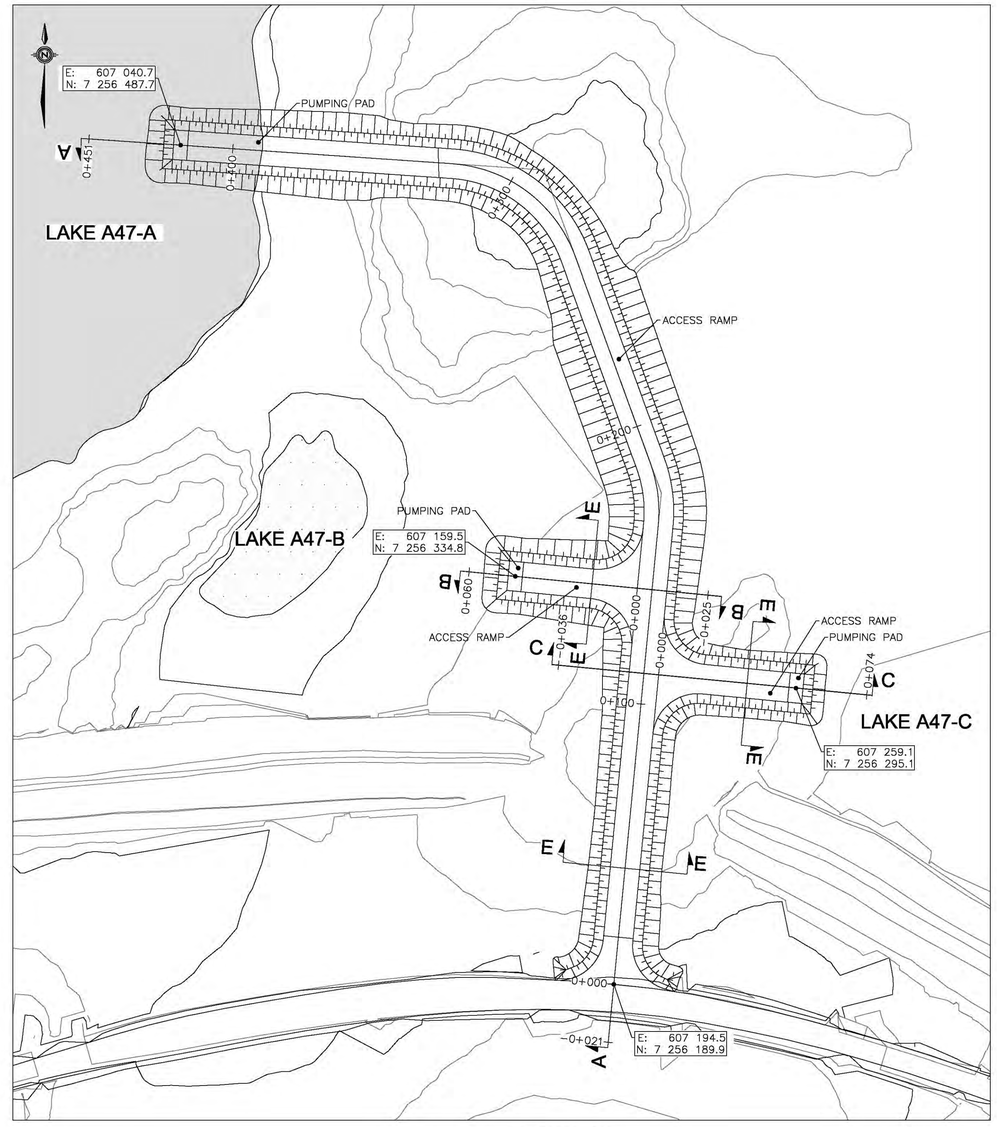

PLAN VIEW
ACCESS RAMPS AND PUMPING PADS
LAKES A47-A, A47-B, A47-C
SCALE : 1: 1000

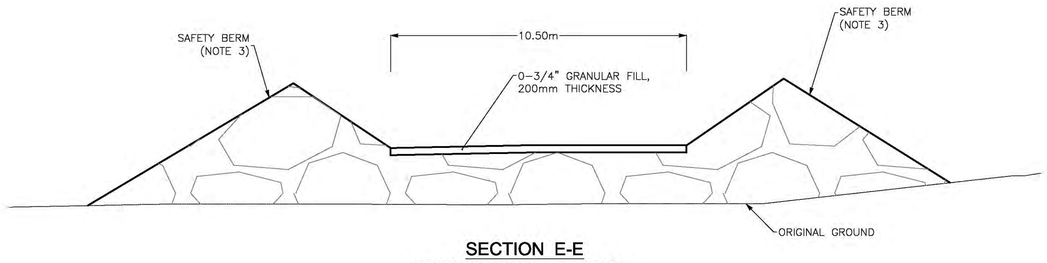

SECTION E-E
TYPICAL RAMP SECTION
SCALE : 1: 100

ESTIMATED IN-PLACE QUANTITIES CONSTRUCTION – ACCESS RAMPS AND PADS		
Lake (Access ramp and pad)	Granular fill, 0-3/4" (final grade, thickness 200 mm) (m^3)	Run-of-mine rockfill (0-1000 mm) (m^3)
A49-B	341.8	8945.2
A47-A	935.4	27177.2
A47-B	32.46	2275.7
A47-C	34.5	1082.6

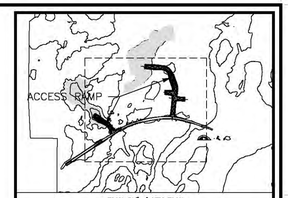

PLAN CLÉ / KEY PLAN

PROJECT No	SUBDIVISION	SUBJECT		SERIAL	REV.
668284	8000	4G	DD	0001	E00

NOTES GÉNÉRALES / GENERAL NOTES

NOTES

1. GROUND TOPOGRAPHY WAS PROVIDED BY AEM.
2. ALL UNITS ARE IN METERS.
3. SAFETY BERMS SHALL BE BASED ON THE MINE ACT REQUIREMENTS.
4. STABILITY OF THE RAMPS TO BE ASSESSED ON A DAILY BASIS BY QUALIFIED GEOTECHNICAL PERSONNEL DURING CONSTRUCTION. WORK SHALL BE SUSPENDED IF SIGNS OF INSTABILITY ARE OBSERVED.
5. INITIAL ROCK FILL MATERIAL PLACEMENT IN WATER, AGAINST THE NATURAL SOIL OF THE LAKE, MUST BE PLACED USING A SHOVEL.
6. FOR ALL ROCK FILL PLACEMENT OVER WATER, SOME FOUNDATION PREPARATION MIGHT BE NEEDED DEPENDING ON NATURE AND THICKNESS OF SEDIMENT ENCOUNTERED

LEGEND

RUN-OF-MINE ROCKFILL 0-1000 MM

DESSINS EN RÉFÉRENCE / REFERENCE DRAWINGS

TITRE / TITLE	# DWG
–	–
–	–
–	–
–	–
–	–
–	–

AGNICO EAGLE

REV.	DATE	DESCRIPTION	PAR/BY	APP.	CLIENT
R0	2020-05-28	ISSUED FOR CONSTRUCTION	MM/MM/RC	ALN/MB	
R0	2020-03-30	ISSUED FOR CLIENT COMMENTS	MM/MM/RC	ALN	
RA	2020-03-23	ISSUED FOR INTERNAL COMMENTS	MM/MM/RC	ALN	

REVISIONS

PERMIT TO PRACTICE
SNC-LAVALIN INC.
Signature NAME
Date DATE 2020-05-29
PERMIT NUMBER: P 260
The Association of Professional Engineers, Geologists and Geophysicists of NWT/NU

TITRE / TITLE

0
648 – DEWATERING
230 – GENERAL EARTHWORKS

PLAN VIEW, PROFILES AND TYPICAL SECTIONS
AMARUQ DEWATERING PHASE
LAKES A47-A, A47-B, A47-C AND A49-B
ACCESS RAMPS AND PUMPING PADS

DESSINÉ PAR DRAWN BY	MARIUS MOVILA	DATE 2020-03-23
VERIFIÉ PAR CHECKED BY	DARIUSH RASTGOU/ DAN CHEN	2020-03-23
APPROUVÉ PAR APPROVED BY	ANH-LONG NGUYEN	2020-03-23
ÉCHELLE SCALE	AS SHOWN	DATE 2020-03-23

NO. DESSIN DRAWING NO. 61-648-230-200

NO. PROJET PROJECT NO.	REVISION	FEUILLE / SHT
6127	R0	1 / 2

DERNIÈRE SAUVEGARDE: 2020/05/28 – 11:17am
CHEMIN: T:\pro\668284 WNGI Phase 2 Detailed Engineering\40_DD_DESSINS\8000\668284-8000-4GDD-0001-E00(61-648-230-200).dwg

AE-CART-ARCH D

FILE NO.

NO. DESSIN DRAWING No. 61-648-230-200

FORMAT ARCHD

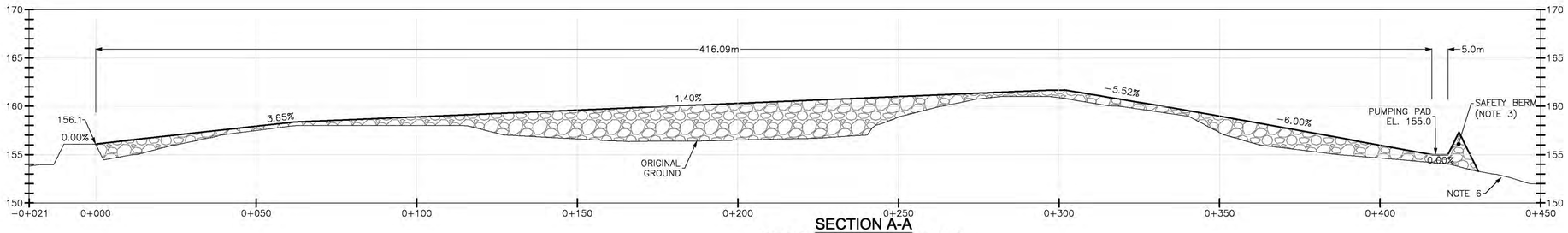

SECTION A-A
PROFILE LAKE A47-A RAMP

SCALE : H 1:750
V 1:250

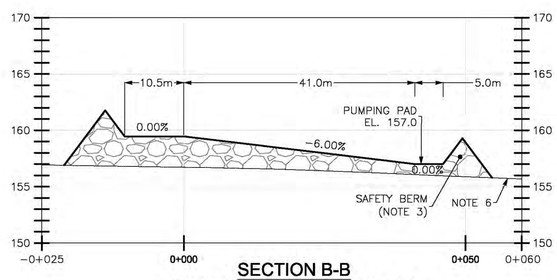

SECTION B-B
PROFILE LAKE A47-B RAMP

SCALE : H 1:500
V 1:250

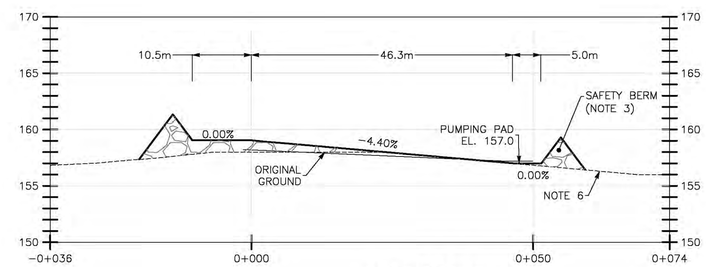

SECTION C-C
PROFILE LAKE A47-C RAMP

SCALE : H 1:500
V 1:250

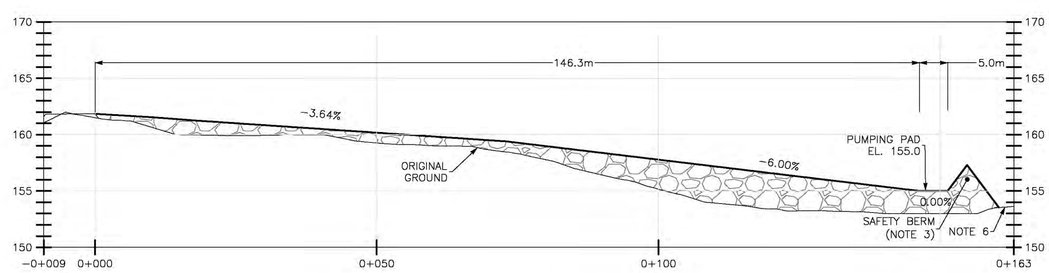

SECTION D-D
PROFILE LAKE A49-B RAMP

SCALE : H 1:500
V 1:250

PROJECT No	SUBDIVISION	SUBJECT		SERIAL	REV.
668284	8000	4G	DD	0001	E00

NOTES GÉNÉRALES / GENERAL NOTES

NOTES

1. GROUND TOPOGRAPHY WAS PROVIDED BY AEM.
2. ALL UNITS ARE IN METERS.
3. SAFETY BERMS SHALL BE BASED ON THE MINE ACT REQUIREMENTS.
4. STABILITY OF THE RAMPS TO BE ASSESSED ON A DAILY BASIS BY QUALIFIED GEOTECHNICAL PERSONNEL DURING CONSTRUCTION. WORK SHALL BE SUSPENDED IF SIGNS OF INSTABILITY ARE OBSERVED.
5. INITIAL ROCK FILL MATERIAL PLACEMENT IN WATER, AGAINST THE NATURAL SOIL OF THE LAKE, MUST BE PLACED USING A SHOVEL.
6. FOR ALL ROCK FILL PLACEMENT OVER WATER, SOME FOUNDATION PREPARATION MIGHT BE NEEDED DEPENDING ON NATURE AND THICKNESS OF SEDIMENT ENCOUNTERED.

LEGEND

RUN-OF-MINE ROCKFILL 0-1000 MM

DESSINS EN RÉFÉRENCE / REFERENCE DRAWINGS

TITRE / TITLE	# DWG
–	–
–	–
–	–
–	–
–	–
–	–

AGNICO EAGLE

REV.	DATE	DESCRIPTION	PAR/BY	APP.	CLIENT
R0	2020-05-28	ISSUED FOR CONSTRUCTION	MA/MA/RC	ALN/HB	
RB	2020-03-30	ISSUED FOR CLIENT COMMENTS	MA/MA/RC	ALN	
RA	2020-03-23	ISSUED FOR INTERNAL COMMENTS	MA/MA/RC	ALN	

REVISIONS

PERMIT TO PRACTICE
SNC-LAVALIN INC.
Signature NAME
Date DATE 2020-05-28
PERMIT NUMBER: P 260
The Association of Professional Engineers, Geologists and Geophysicists of NWT/NU

TITRE / TITLE
AGNICO EAGLE – AMARUQ DIVISION
64B – DEWATERING
230 – GENERAL EARTHWORKS

PLAN VIEW, PROFILES AND TYPICAL SECTIONS
AMARUQ DEWATERING PHASE
LAKESA 47-A, A47-B, A47-C AND A49-B
ACCESS RAMPS AND PUMPING PADS

DESSINÉ PAR DRAWN BY	MARIUS MOVILA	DATE 2020-03-23
VERIFIÉ PAR CHECKED BY	DARIUSH RASTGOU/ DAN CHEN	2020-03-23
APPROUVÉ PAR APPROVED BY	ANH-LONG NGUYEN	2020-03-23
ÉCHELLE SCALE	AS SHOWN	DATE 2020-03-23
NO. DESSIN DRAWING NO.	61-648-230-200	
NO. PROJET PROJECT NO.	6127	REVISION R0 / FEUILLE / SHT 2 / 2

DERNIÈRE SAUVEGARDE: 2020/05/28 – 11:18am
CHEMIN: T:\pro\6\668284 WNGI Phase 2 Detailed Engineering\40_DD_DESSINS\8000\668284-8000-4GDD-0001-E00(61-648-230-200).dwg

AE-CART-ARCH D

FILE NO.

NO. DESSIN
DRAWING NO. 61-648-230-201

FORMAT ARCHD

PLAN VIEW
ACCESS RAMP AND PUMPING PAD
LAKE A50, A51, A52 AND A-P21

SCALE : 1: 1500

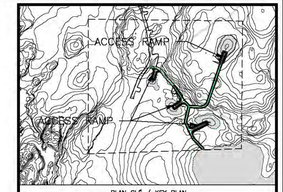

PLAN CLÉ / KEY PLAN

PROJECT No	SUBDIVISION	SUBJECT	SERIAL	REV.
668284	8000	4G DD	0002	E00

NOTES GÉNÉRALES / GENERAL NOTES

NOTES

1. GROUND TOPOGRAPHY WAS PROVIDED BY AEM.
2. ALL UNITS ARE IN METERS.
3. SAFETY BERMS SHALL BE BASED ON THE MINE ACT REQUIREMENTS.
4. STABILITY OF THE RAMPS TO BE ASSESSED ON A DAILY BASIS BY QUALIFIED GEOTECHNICAL PERSONNEL DURING CONSTRUCTION. WORK SHALL BE SUSPENDED IF SIGNS OF INSTABILITY ARE OBSERVED.
5. ROAD ALIGNMENT IS APPROXIMATE AND SHALL BE ADJUSTED DEPENDING ON FIELD CONDITIONS AND LOCAL TOPOGRAPHY.
6. INITIAL ROCKFILL MATERIAL PLACEMENT IN WATER, AGAINST THE NATURAL SOIL OF THE LAKE, MUST BE PLACED USING A SHOVEL.
7. THE ROAD AND RAMP CONSTRUCTION MATERIAL INSIDE THE FOOTPRINT OF THE FUTURE IVR WRSF SHALL BE EITHER PAG OR NPAG MATERIAL. THE USE OF PAG MATERIAL SHALL START APPROXIMATELY 8 METERS FROM THE TOE OF THE WRSF.
8. WATER LEVEL IN LAKES IS ESTIMATED BASED ON THE TOPOGRAPHY AROUND THE LAKE. THE ELEVATION IS APPROXIMATE AND SHALL BE VERIFIED AT THE SITE BEFORE THE START OF WORK. THE MINIMUM ALLOWABLE DIFFERENCE BETWEEN THE LAKE AND THE ROLLING SURFACE OF THE ROAD SHALL BE 0.5 METER.
9. PROVIDE SEMI-CULVERTS TO PROTECT EXISTING ELECTRICAL CABLES AND WIRES LOCATED AT THIS APPROXIMATE AREA.

LEGEND

RUN-OF-MINE ROCKFILL 0-1000 MM

DESSINS EN RÉFÉRENCE / REFERENCE DRAWINGS

TITRE / TITLE	# DWG
–	–
–	–
–	–
–	–
–	–
–	–

AGNICO EAGLE

REV.	DATE	DESCRIPTION	PAD/BY	APP.	CLIENT
R0	2020-06-12	ISSUED FOR CONSTRUCTION	MM/DC/NQ	ALN/HB	
RB	2020-05-15	ISSUED FOR CLIENT COMMENTS	MM/DC/NQ	ALN/HB	
RA	2020-05-14	ISSUED FOR INTERNAL COMMENTS	MM/DC/NQ	ALN/HB	

REVISIONS

PERMIT TO PRACTICE
SNC-LAVALIN INC.
Signature NAME
Date DATE 2020-06-12
PERMIT NUMBER: P 260
The Association of Professional Engineers, Geologists and Geophysicists of NWT/NU

TITRE / TITLE
AGNICO EAGLE – AMARUQ DIVISION
648 – DEWATERING
230 – GENERAL EARTHWORKS

PLAN VIEW, PROFILES AND TYPICAL SECTIONS
AMARUQ DEWATERING PHASE
LAKES A50, A51, A52 AND A-P21
ACCESS RAMPS AND PUMPING PADS

DESSINÉ PAR / DRAWN BY	MARIUS MOVILA	DATE 2020-03-23
VERIFIÉ PAR / CHECKED BY	DAN CHEN	2020-03-23
APPROUVÉ PAR / APPROVED BY	ANH-LONG NGUYEN	2020-03-23
ÉCHELLE / SCALE	AS SHOWN	DATE 2020-03-23

NO. DESSIN / DRAWING NO. 61-648-230-201

NO. PROJET / PROJECT NO.	REVISION	FEUILLE / SHT
6127	R0	1 / 2

DERNIÈRE SAUVEGARDE: 2020/06/11 – 8:38am
CHEMIN: T:\proj\668284 WMG Phase 2 Detailed Engineering\40_DD_DESSINS\8000\668284-8000-4GDD-0002-E00(61-648-230-201).dwg

AE-CART-ARCH D

FILE NO.

NO. DESSIN
DRAWING NO. 61-648-230-201

FORMAT ARCHD

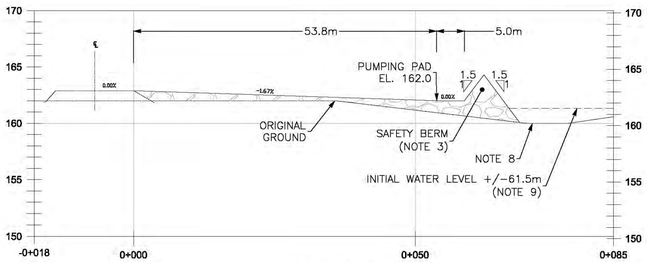

SECTION A-A
PROFILE LAKE A50 RAMP

SCALE : H 1:500
V 1:250

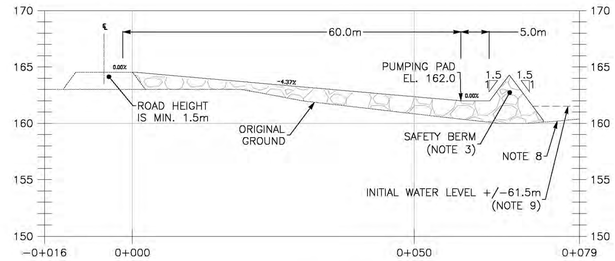

SECTION B-B
PROFILE LAKE A51 RAMP

SCALE : H 1:500
V 1:250

ESTIMATED IN-PLACE QUANTITIES CONSTRUCTION – ACCESS RAMPS AND PADS		
Lake (Access ramp and pad)	Granular fill, 0-3/4" (final grade, thickness 200 mm) (m^3)	Run-of-mine rockfill (0-1000 mm) (m^3)
A50	159.8	2289.7
A51	153.2	3140.6
A52	238.3	7262.9
A-P21	121.9	5536.3

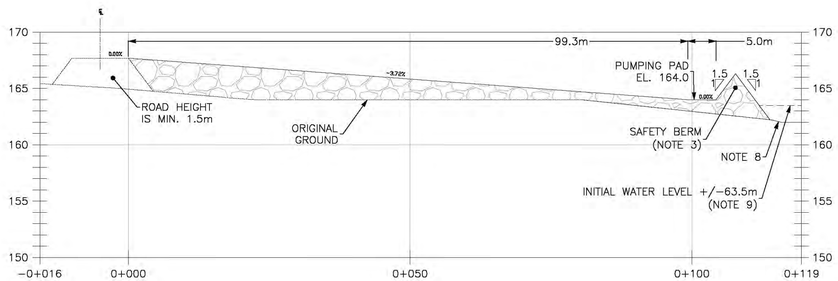

SECTION C-C
PROFILE LAKE A52 RAMP

SCALE : H 1:500
V 1:250

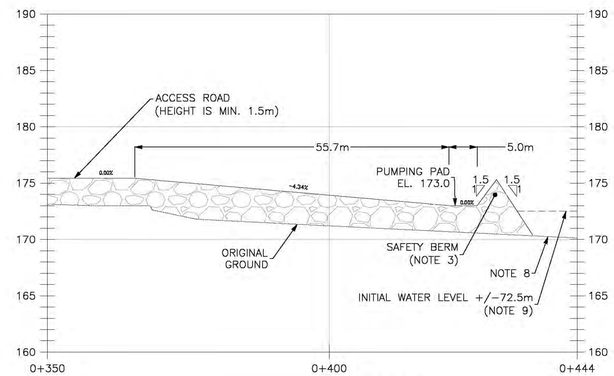

SECTION D-D
PROFILE LAKE A-P21 RAMP

SCALE : H 1:500
V 1:250

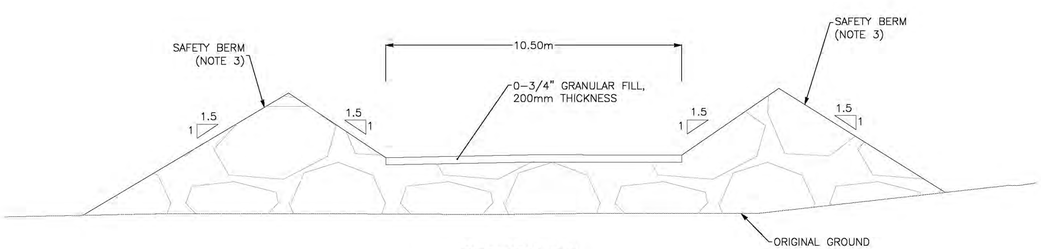

SECTION E-E
TYPICAL RAMP SECTION

SCALE : 1:100

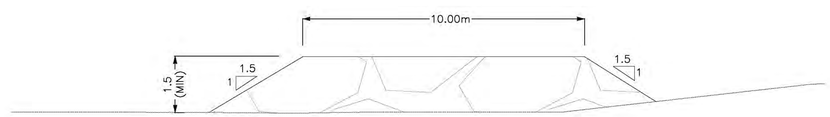

SECTION F-F
TYPICAL ROAD SECTION

SCALE : N.T.S.

PROJECT No	SUBDIVISION	SUBJECT	SERIAL	REV.
668284	8000	4G DD	0002	E00

NOTES GÉNÉRALES / GENERAL NOTES

NOTES
1. GROUND TOPOGRAPHY WAS PROVIDED BY AEM.
2. ALL UNITS ARE IN METERS.
3. SAFETY BERMS SHALL BE BASED ON THE MINE ACT REQUIREMENTS.
4. STABILITY OF THE RAMPS TO BE ASSESSED ON A DAILY BASIS BY QUALIFIED GEOTECHNICAL PERSONNEL DURING CONSTRUCTION. WORK SHALL BE SUSPENDED IF SIGNS OF INSTABILITY ARE OBSERVED.
5. ROAD ALIGNMENT IS APPROXIMATE AND SHALL BE ADJUSTED DEPENDING ON FIELD CONDITIONS AND LOCAL TOPOGRAPHY.
6. INITIAL ROCKFILL MATERIAL PLACEMENT IN WATER, AGAINST THE NATURAL SOIL OF THE LAKE, MUST BE PLACED USING A SHOVEL.
7. THE ROAD AND RAMP CONSTRUCTION MATERIAL INSIDE THE FOOTPRINT OF THE FUTURE IVR WRSF SHALL BE EITHER PAG OR NPAG MATERIAL. THE USE OF PAG MATERIAL SHALL START APPROXIMATELY 8 METERS FROM THE TOE OF THE WRSF.
8. FOR ALL ROCK FILL PLACEMENT OVER WATER, SOME FOUNDATION PREPARATION MIGHT BE NEEDED DEPENDING ON NATURE AND THICKNESS OF SEDIMENT ENCOUNTERED.
9. WATER LEVEL IN LAKES IS ESTIMATED BASED ON THE TOPOGRAPHY AROUND THE LAKE. THE ELEVATION IS APPROXIMATE AND SHALL BE VERIFIED AT THE SITE BEFORE THE START OF WORK. THE MINIMUM ALLOWABLE DIFFERENCE BETWEEN THE LAKE AND THE ROLLING SURFACE OF THE ROAD SHALL BE 0.5 METER.

LEGEND
RUN-OF-MINE ROCKFILL 0-1000 MM

DESSINS EN RÉFÉRENCE / REFERENCE DRAWINGS

TITRE / TITLE	# DWG
–	–
–	–
–	–
–	–
–	–
–	–

AGNICO EAGLE

REV.	DATE	DESCRIPTION	PAR/BY	APP.	CLIENT
R0	2020-06-12	ISSUED FOR CONSTRUCTION	MM/DC/KQ	ALK/RB	
RB	2020-05-15	ISSUED FOR CLIENT COMMENTS	MM/DC/KQ	ALK/RB	
RA	2020-05-14	ISSUED FOR INTERNAL COMMENTS	MM/DC/KQ	ALK/RB	

REVISIONS

PERMIT TO PRACTICE
SNC-LAVALIN INC.
Signature NAME
Date DATE 2020-06-03
PERMIT NUMBER: P 260
The Association of Professional Engineers, Geologists and Geophysicists of NWT/NU

TITRE / TITLE
AGNICO EAGLE – AMARUQ DIVISION
648 – DEWATERING
230 – GENERAL EARTHWORKS

PLAN VIEW, PROFILES AND TYPICAL SECTIONS
AMARUQ DEWATERING PHASE
LAKES A50, A51, A52 AND A-P21
ACCESS RAMPS AND PUMPING PADS

DESSINÉ PAR / DRAWN BY	MARIUS MOVILA	DATE 2020-03-23
VERIFIÉ PAR / CHECKED BY	DAN CHEN	2020-03-23
APPROUVÉ PAR / APPROVED BY	ANH-LONG NGUYEN	2020-03-23
ÉCHELLE / SCALE	AS SHOWN	DATE 2020-03-23
NO. DESSIN / DRAWING NO.	61-648-230-201	
NO. PROJET / PROJECT NO. 6127	REVISION R0	FEUILLE / SHT 2 / 2

DERNIÈRE SAUVEGARDE: 2020/06/11 – 8:37am
CHEMIN: T:\prj\668284 WMGI Phase 2 Detailed Engineering\4D_DD_DESSINS\8000\668284-8000-4GDD-0002-E00(61-648-230-201).dwg

AE-CART-ARCH D

FILE NO.

NO. DESSIN / DRAWING NO. 61–648–270–203–R1

FORMAT ARCHD

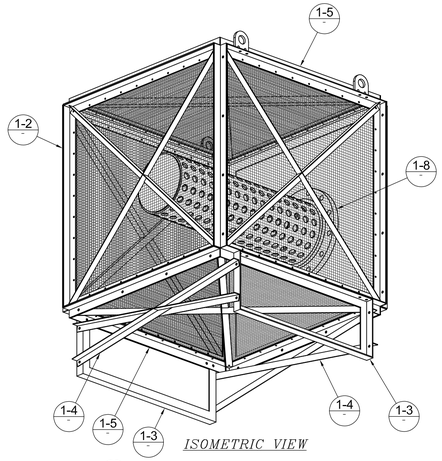

ISOMETRIC VIEW

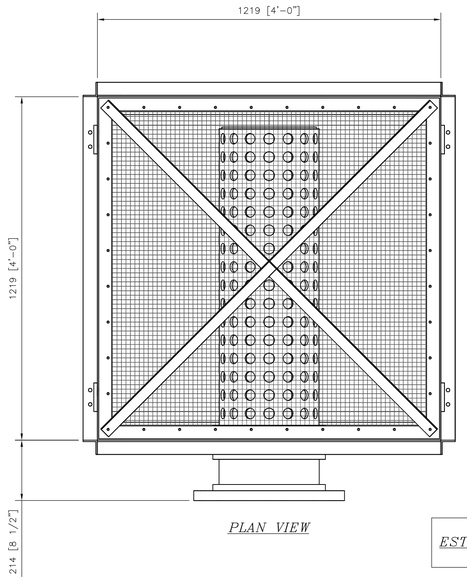

PLAN VIEW

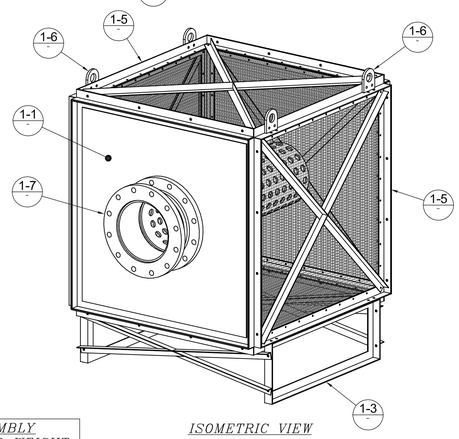

ISOMETRIC VIEW

ASSEMBLY
ESTIMATED WEIGHT:
475 KG

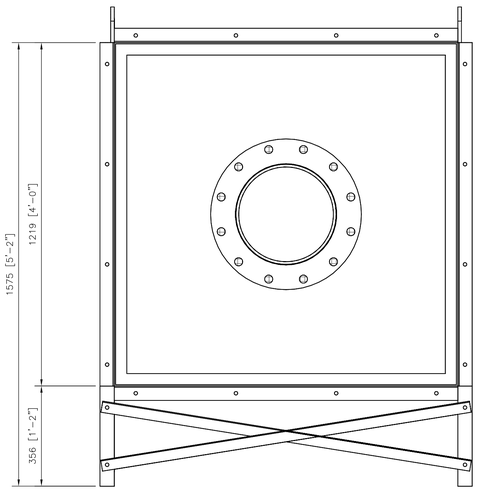

ELEVATION VIEW

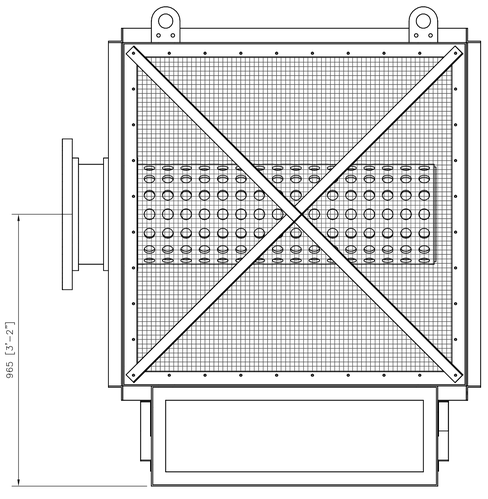

SIDE VIEW

FISH CAGE ASSEMBLY
SCALE: 1:10

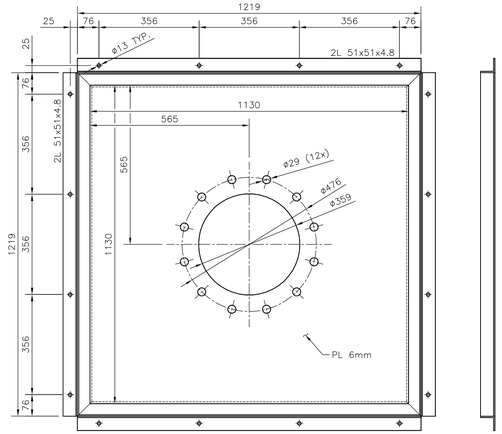

DETAIL 1-1
SCALE: 1:10
QTY: 1

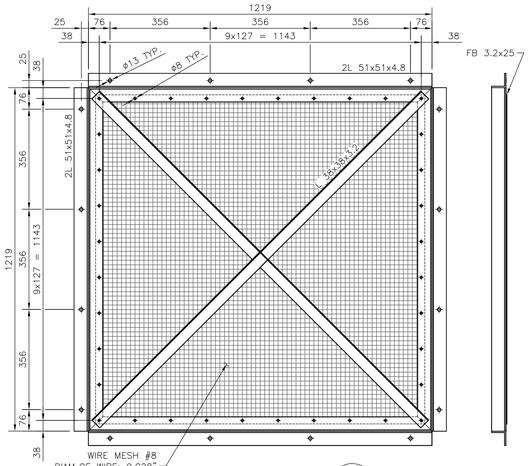

DETAIL 1-2
SCALE: 1:10
QTY: 1

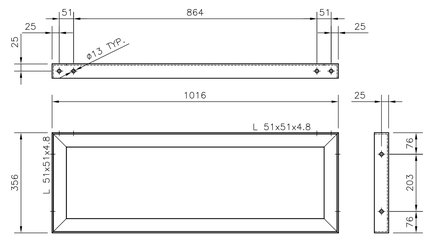

DETAIL 1-3
SCALE: 1:10
QTY: 2

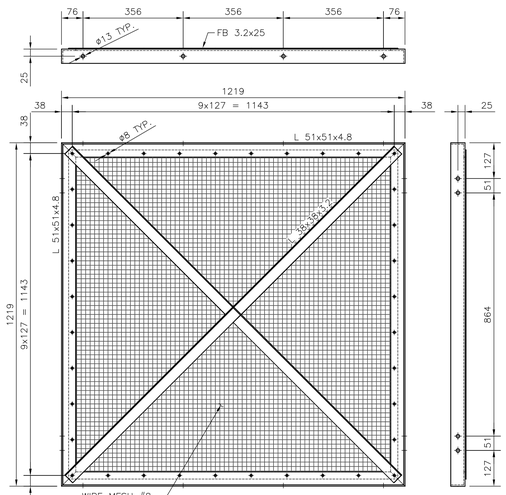

DETAIL 1-5
SCALE: 1:10
QTY: 4

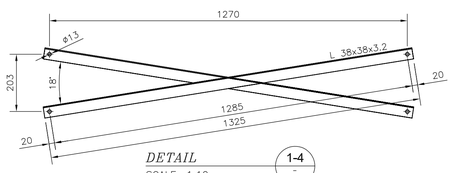

DETAIL 1-4
SCALE: 1:10
QTY: 2

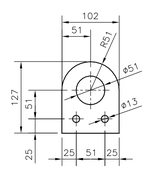

DETAIL 1-6
SCALE: 1:10
QTY: 4

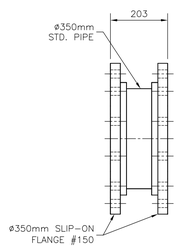

DETAIL 1-7
SCALE: 1:10
QTY: 1

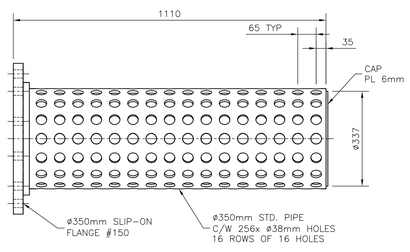

DETAIL 1-8
SCALE: 1:10
QTY: 1

PLAN CLÉ
KEY PLAN

NOTES GÉNÉRALES / GENERAL NOTES

- STRUCTURE : PAINTED STEEL AS PER GENERAL GUIDELINE DESIGN: 6115–000–245–GGD–003.
- WIRE MESH : PREFERRED STAINLESS STEEL UNPAINTED TO LIMIT CLOGGING.

POUR SOUMISSION
FOR TENDER
AGNICO EAGLE
DATE : 2020–03–25

DESSINS EN RÉFÉRENCE / REFERENCE DRAWINGS

TITRE / TITLE	# DWG
–	–
–	–
–	–
–	–
–	–
–	–

AGNICO EAGLE

REVISIONS

REV.	DATE	DESCRIPTION	PAR/BY	APP.	CLIENT
1	2020/03/25	ADDENDUM #1	BL	IG	BR
0	2020/03/23	ISSUED FOR TENDER	BL	IG	BR

SNC·LAVALIN
SNC-Lavalin Stavibel inc.
150, rue Gamble Ouest
Rouyn-Noranda (Québec) J9X 2R7
Tél. : 819 764-5181 Fax : 819 797-0158
www.sncdavalin.com

Project # : 671087-0000

TITRE / TITLE
AGNICO EAGLE – MEADOWBANK DIVISION
648 – DEWATERING
270 – PIPING
PLAN, ELEVATION & DETAILS
FISH CAGES FOR HL250
DEWATERING PUMPS

DESSINÉ PAR / DRAWN BY	BRUNO LEMIEUX	DATE 2020/03/20
VERIFIÉ PAR / CHECKED BY	ISRAËL GAGNON	2020/03/20
APPROUVÉ PAR / APPROVED BY	ISRAËL GAGNON	2020/03/23
ÉCHELLE / SCALE	INDICATED	DATE 2020/03/20

NO. DESSIN / DRAWING NO. 61–648–270–203

NO. PROJET / PROJECT NO.	REVISION	FEUILLE / SHT
61	1	1 / 2

AE–CART–ARCH D

C:\Users\lemib\Desktop\61–648–270–203–R1.dwg–2013–02–19 14:03:29

FILE NO. 61–648–270–203–R1.dwg

NO. DESSIN DRAWING NO. 61-648-270-203-R1

FORMAT ARCHD

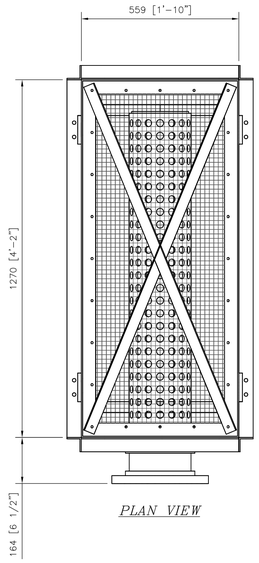

PLAN VIEW

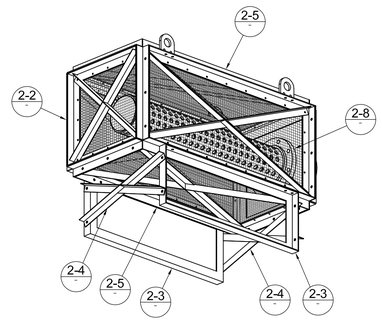

ISOMETRIC VIEW

ASSEMBLY
ESTIMATED WEIGHT:
250 KG

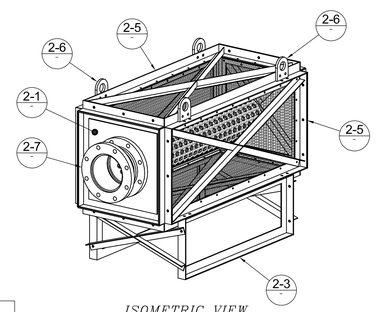

ISOMETRIC VIEW

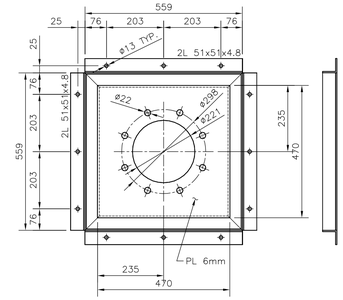

DETAIL 2-1
SCALE: 1:10
QTY: 1

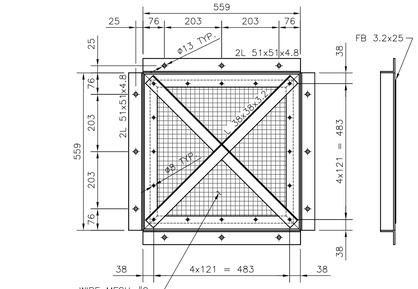

DETAIL 2-2
SCALE: 1:10
QTY: 1

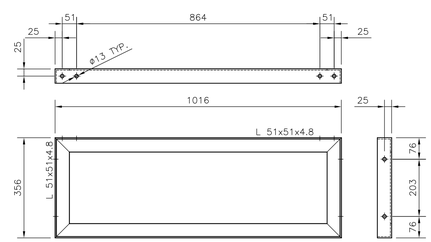

DETAIL 2-3
SCALE: 1:10
QTY: 2

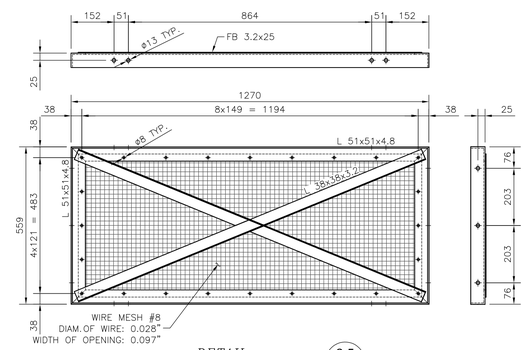

DETAIL 2-5
SCALE: 1:10
QTY: 4

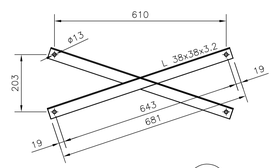

DETAIL 2-4
SCALE: 1:10
QTY: 2

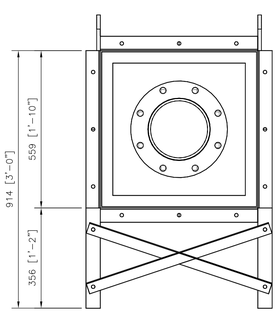

ELEVATION VIEW

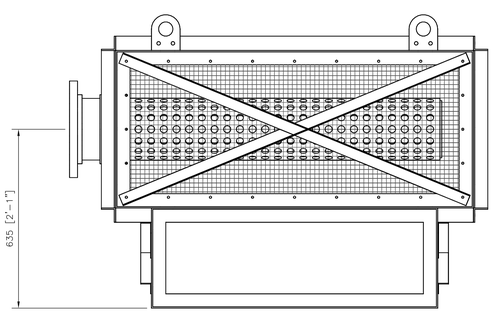

SIDE VIEW

FISH CAGE ASSEMBLY
SCALE: 1:10

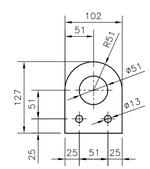

DETAIL 2-6
SCALE: 1:10
QTY: 4

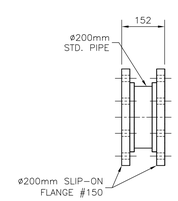

DETAIL 2-7
SCALE: 1:10
QTY: 1

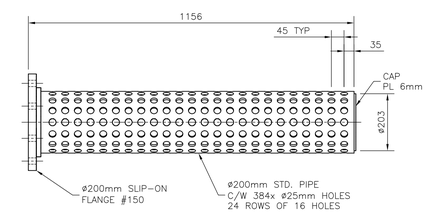

DETAIL 2-8
SCALE: 1:10
QTY: 1

PLAN CLÉ
KEY PLAN

NOTES GÉNÉRALES / GENERAL NOTES

- STRUCTURE : PAINTED STEEL AS PER GENERAL GUIDELINE DESIGN: 6115-000-245-GGD-003.
- WIRE MESH : PREFERRED STAINLESS STEEL UNPAINTED TO LIMIT CLOGGING.

POUR SOUMISSION
FOR TENDER
AGNICO EAGLE
DATE : 2020-03-25

DESSINS EN RÉFÉRENCE / REFERENCE DRAWINGS

TITRE / TITLE	# DWG
–	–
–	–
–	–
–	–
–	–
–	–

AGNICO EAGLE

REV.	DATE	DESCRIPTION	PAR/BY	APP.	CLIENT
1	2020/03/25	ADDENDUM #1	BL	IG	BR
0	2020/03/23	ISSUED FOR TENDER	BL	IG	BR

REVISIONS

SNC·LAVALIN
SNC-Lavalin Stavibel inc.
150, rue Gamble Ouest
Rouyn-Noranda (Québec) J9X 2R7
Tél. : 819 764-5181 Fax : 819 797-0158
www.sncdavalin.com

Project # : 671087-0000

TITRE / TITLE
AGNICO EAGLE – MEADOWBANK DIVISION
648 – DEWATERING
270 – PIPING
PLAN, ELEVATION & DETAILS
FISH CAGES FOR DC103
DEWATERING PUMPS

DESSINÉ PAR DRAWN BY	BRUNO LEMIEUX	DATE 2020/03/20
VERIFIÉ PAR CHECKED BY	ISRAËL GAGNON	2020/03/20
APPROUVÉ PAR APPROVED BY	ISRAËL GAGNON	2020/03/23
ÉCHELLE SCALE	INDICATED	DATE 2020/03/20

NO. DESSIN DRAWING NO. 61-648-270-203

NO. PROJET PROJECT NO.	REVISION	FEUILLE / SHT
61	1	2 / 2

AE-CART-ARCH D

C:\Users\lemib\Desktop\61-648-270-203-R1.dwg-2013-02-19 14:03:29

FILE NO. 61-648-270-203-R1.dwg

Appendix B

Dewatering phase construction pictures

A49 before pumping

A49 access road

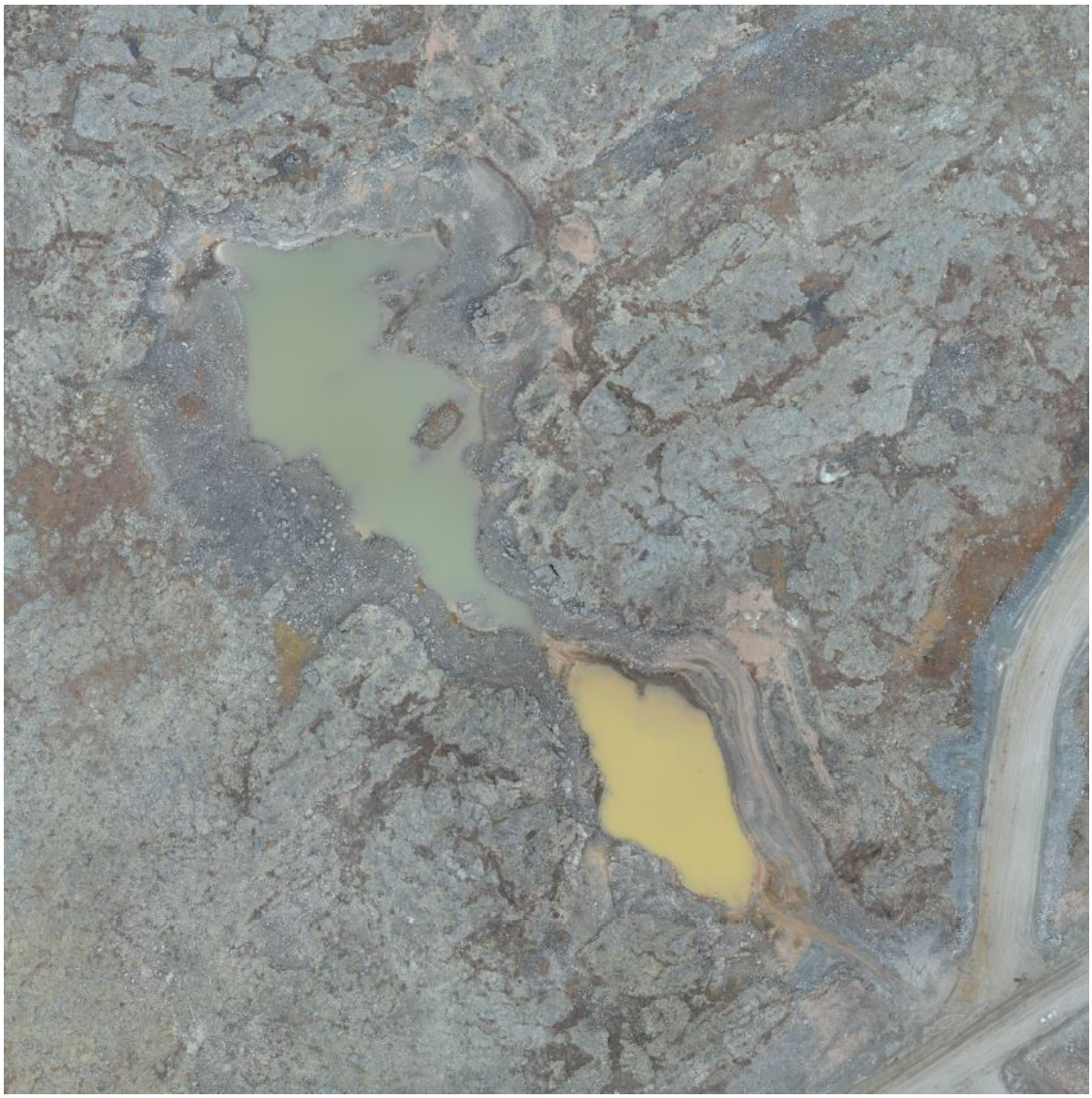

A49 after pumping

A47 before pumping

A47 pump and pad

A47 during pumping

A47 After pumping

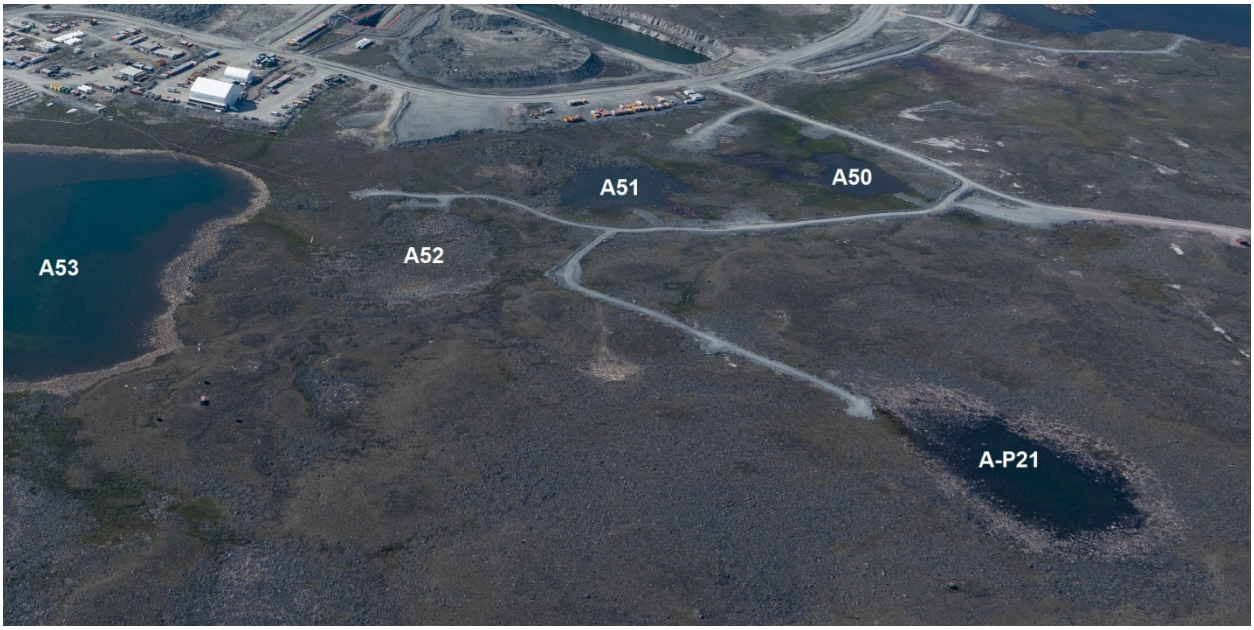

A50, A51, A52, A53, A-P21, before dewatering

A50 access road construction

A50 after dewatering

A-P21 pond before dewatering

A-P21 after pumping

A51 pond after dewatering

A53 pond before dewatering

A53 pond after dewatering

Appendix C

As-built drawings

NO. DESSIN DRAWING NO. 61-648-270-203-1_R2

FORMAT ARCHD

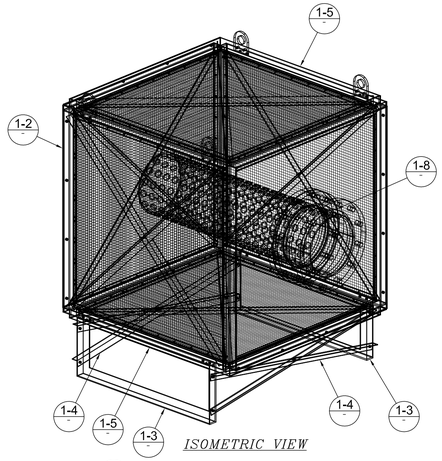

ISOMETRIC VIEW

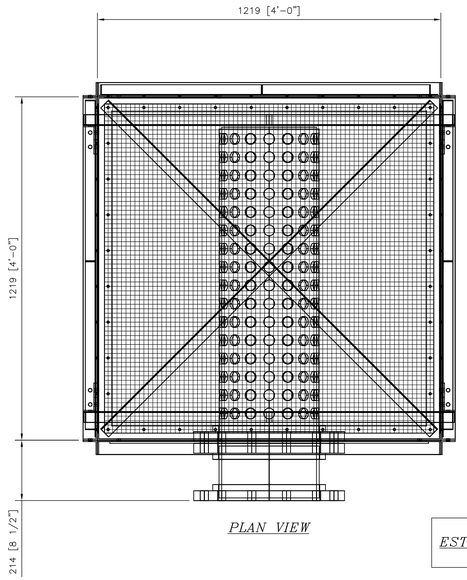

PLAN VIEW

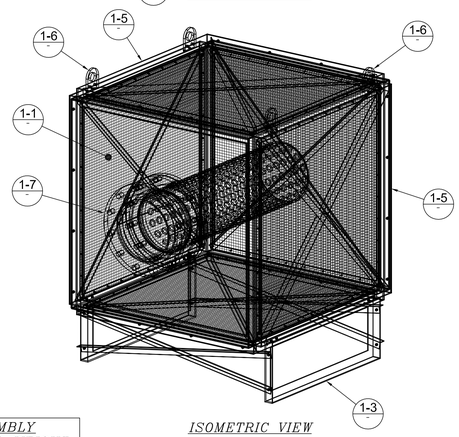

ISOMETRIC VIEW

ASSEMBLY ESTIMATED WEIGHT: 475 KG

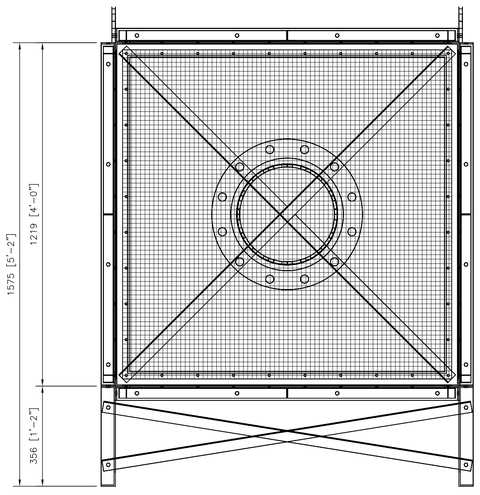

ELEVATION VIEW

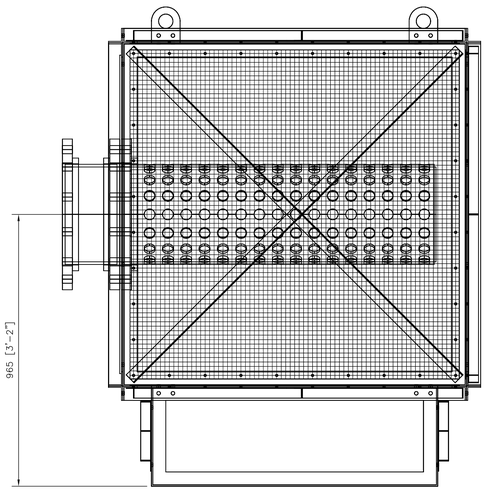

SIDE VIEW

FISH CAGE ASSEMBLY
SCALE: 1:10

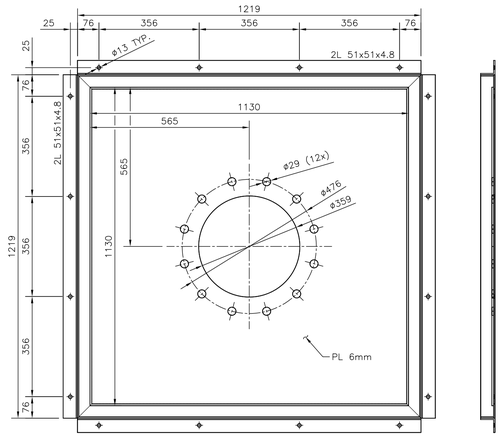

DETAIL 1-1
SCALE: 1:10
QTY: 1

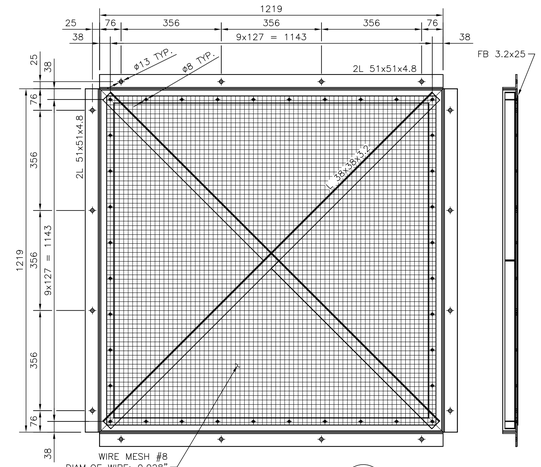

DETAIL 1-2
SCALE: 1:10
QTY: 1

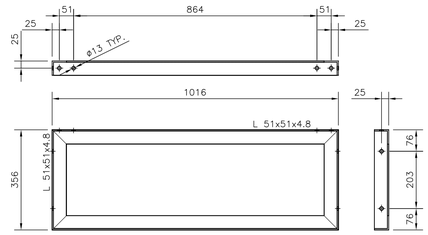

DETAIL 1-3
SCALE: 1:10
QTY: 2

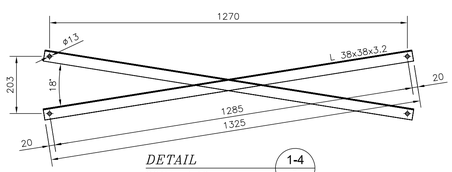

DETAIL 1-4
SCALE: 1:10
QTY: 2

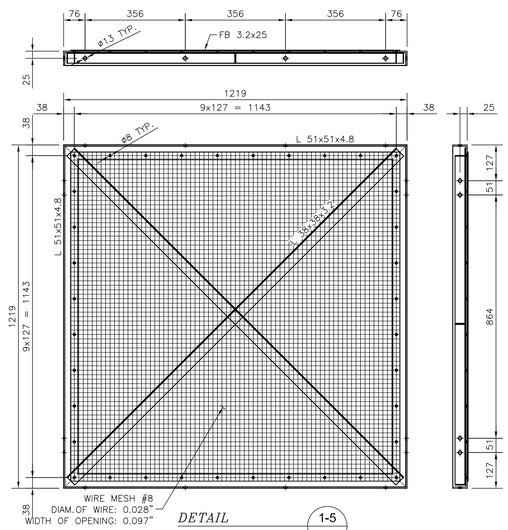

DETAIL 1-5
SCALE: 1:10
QTY: 4

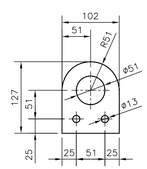

DETAIL 1-6
SCALE: 1:10
QTY: 4

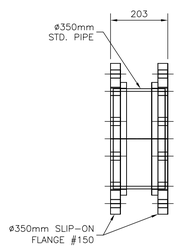

DETAIL 1-7
SCALE: 1:10
QTY: 1

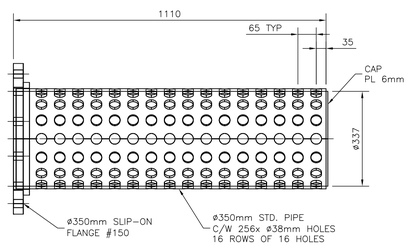

DETAIL 1-8
SCALE: 1:10
QTY: 1

PLAN CLÉ
KEY PLAN

NOTES GÉNÉRALES / GENERAL NOTES

- STRUCTURE : PAINTED STEEL AS PER GENERAL GUIDELINE DESIGN: 6115-000-245-GGD-003.
- WIRE MESH : PREFERRED STAINLESS STEEL UNPAINTED TO LIMIT CLOGGING.

TEL QUE CONSTRUIT
AS BUILT
AGNICO EAGLE
DATE : 2021-01-27

DESSINS EN RÉFÉRENCE / REFERENCE DRAWINGS

TITRE / TITLE	# DWG
–	–
–	–
–	–
–	–
–	–
–	–

AGNICO EAGLE

REVISIONS

REV.	DATE	DESCRIPTION	PAR/BY	APP.	CLIENT
2	2021-01-27	AS-BUILT DRAWING	AG	BR	
1	2020/03/25	ADDENDUM #1	BL	IG	BR
0	2020/03/23	ISSUED FOR TENDER	BL	IG	BR

SNC·LAVALIN
SNC-Lavalin Stavibel Inc.
150, rue Gamble Ouest
Rouyn-Noranda (Québec) J9X 2R7
Tél : 819 764-5181 Fax : 819 797-0158
www.sncdavalin.com

Project # : 671087-0000

TITRE / TITLE
AGNICO EAGLE – MEADOWBANK DIVISION
648 – DEWATERING
270 – PIPING
PLAN, ELEVATION & DETAILS
FISH CAGES FOR HL250
DEWATERING PUMPS

DESSINÉ PAR DRAWN BY	BRUNO LEMIEUX	DATE 2020/03/20
VERIFIÉ PAR CHECKED BY	ISRAËL GAGNON	2020/03/20
APPROUVÉ PAR APPROVED BY	ISRAËL GAGNON	2020/03/23
ÉCHELLE SCALE	INDICATED	DATE 2020/03/20

NO. DESSIN DRAWING NO. 61-648-270-203

NO. PROJET PROJECT NO.	REVISION	FEUILLE / SHT
61	2	1 / 2

AE-CART-ARCH D

C:\Users\olex.gelinas\Desktop\61-648-270-203-1_R2.dwg-2013-02-19 14:03:29

FILE NO. 61-648-270-203-1_R2.dwg

NO. DESSIN DRAWING NO. 61-648-270-203-2_R2

FORMAT ARCHD

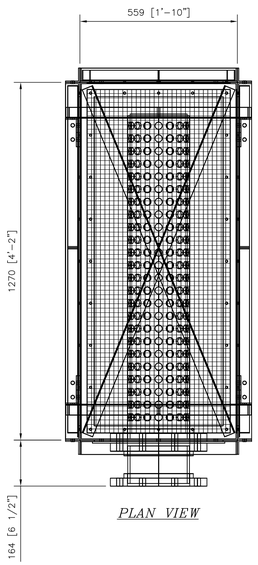

PLAN VIEW

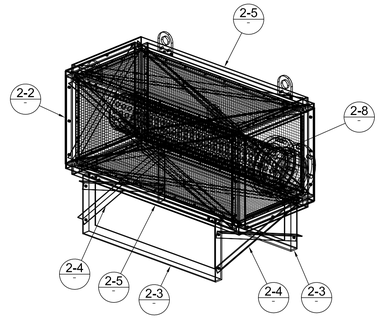

ISOMETRIC VIEW

ASSEMBLY
ESTIMATED WEIGHT:
250 KG

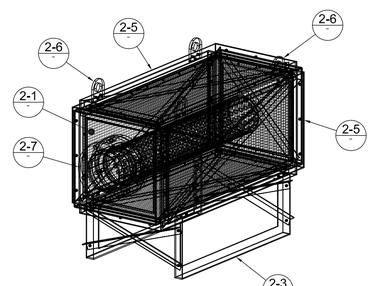

ISOMETRIC VIEW

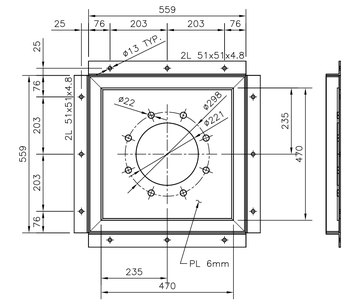

DETAIL 2-1
SCALE: 1:10
QTY: 1

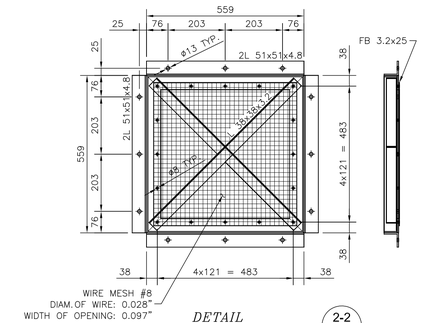

DETAIL 2-2
SCALE: 1:10
QTY: 1

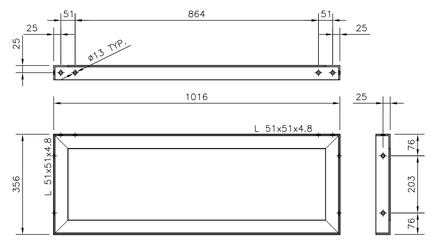

DETAIL 2-3
SCALE: 1:10
QTY: 2

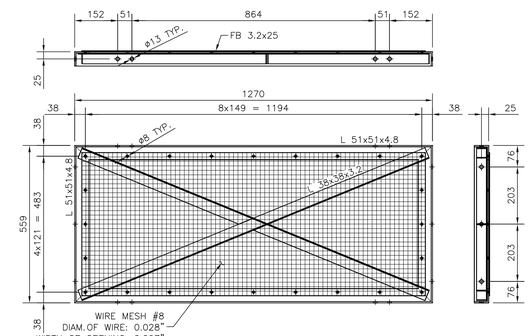

DETAIL 2-5
SCALE: 1:10
QTY: 4

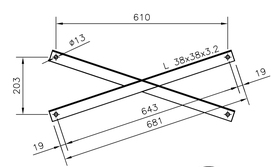

DETAIL 2-4
SCALE: 1:10
QTY: 2

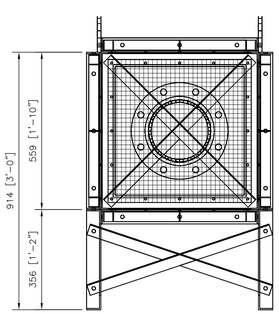

ELEVATION VIEW

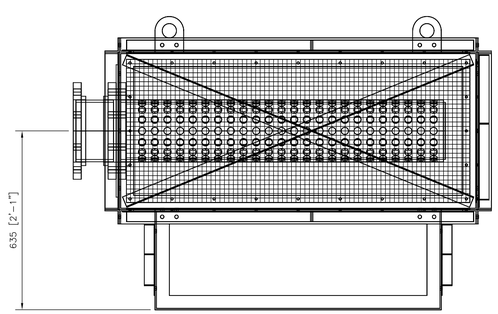

SIDE VIEW

FISH CAGE ASSEMBLY
SCALE: 1:10

DETAIL 2-6
SCALE: 1:10
QTY: 4

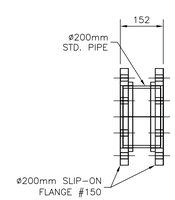

DETAIL 2-7
SCALE: 1:10
QTY: 1

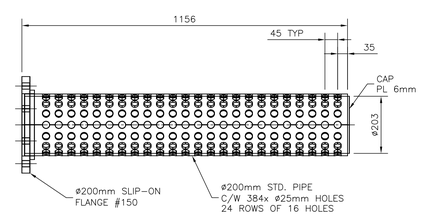

DETAIL 2-8
SCALE: 1:10
QTY: 1

PLAN CLÉ
KEY PLAN

NOTES GÉNÉRALES / GENERAL NOTES

- STRUCTURE : PAINTED STEEL AS PER GENERAL GUIDELINE DESIGN: 6115-000-245-GGD-003.
- WIRE MESH : PREFERRED STAINLESS STEEL UNPAINTED TO LIMIT CLOGGING.

TEL QUE CONSTRUIT
AS BUILT
AGNICO EAGLE
DATE : 2021-01-27

DESSINS EN RÉFÉRENCE / REFERENCE DRAWINGS

TITRE / TITLE	# DWG

AGNICO EAGLE

REV.	DATE	DESCRIPTION	PAR/BY	APP.	CLIENT
2	2021-01-27	AS-BUILT DRAWING	AG	BR	
1	2020/03/25	ADDENDUM #1	BL	IG	BR
0	2020/03/23	ISSUED FOR TENDER	BL	IG	BR

REVISIONS

SNC·LAVALIN
SNC-Lavalin Stavibel Inc.
150, rue Gamble Ouest
Rouyn-Noranda (Québec) J9X 2R7
Tel.: 819 764-5181 Fax.: 819 797-0158
www.snclavalin.com

Project # : 671087-0000

TITRE / TITLE
AGNICO EAGLE – MEADOWBANK DIVISION
648 – DEWATERING
270 – PIPING
PLAN, ELEVATION & DETAILS
FISH CAGES FOR DC103
DEWATERING PUMPS

DESSINÉ PAR DRAWN BY	BRUNO LEMIEUX	DATE 2020/03/20
VERIFIÉ PAR CHECKED BY	ISRAËL GAGNON	2020/03/20
APPROUVÉ PAR APPROVED BY	ISRAËL GAGNON	2020/03/23
ÉCHELLE SCALE	INDICATED	DATE 2020/03/20
NO. DESSIN DRAWING NO.	61-648-270-203	
NO. PROJET PROJECT NO. 61	REVISION 2	FEUILLE / SHT 2 / 2

AE-CART-ARCH D
C:\Users\alex.gelinas\Desktop\61-648-270-203-2_R2.dwg-2013-02-19 14:03:29

FILE NO. 61-648-270-203-2_R2.dwg

NO. DESSIN
DRAWING NO. 61-648-200-202

FORMAT ARCHD

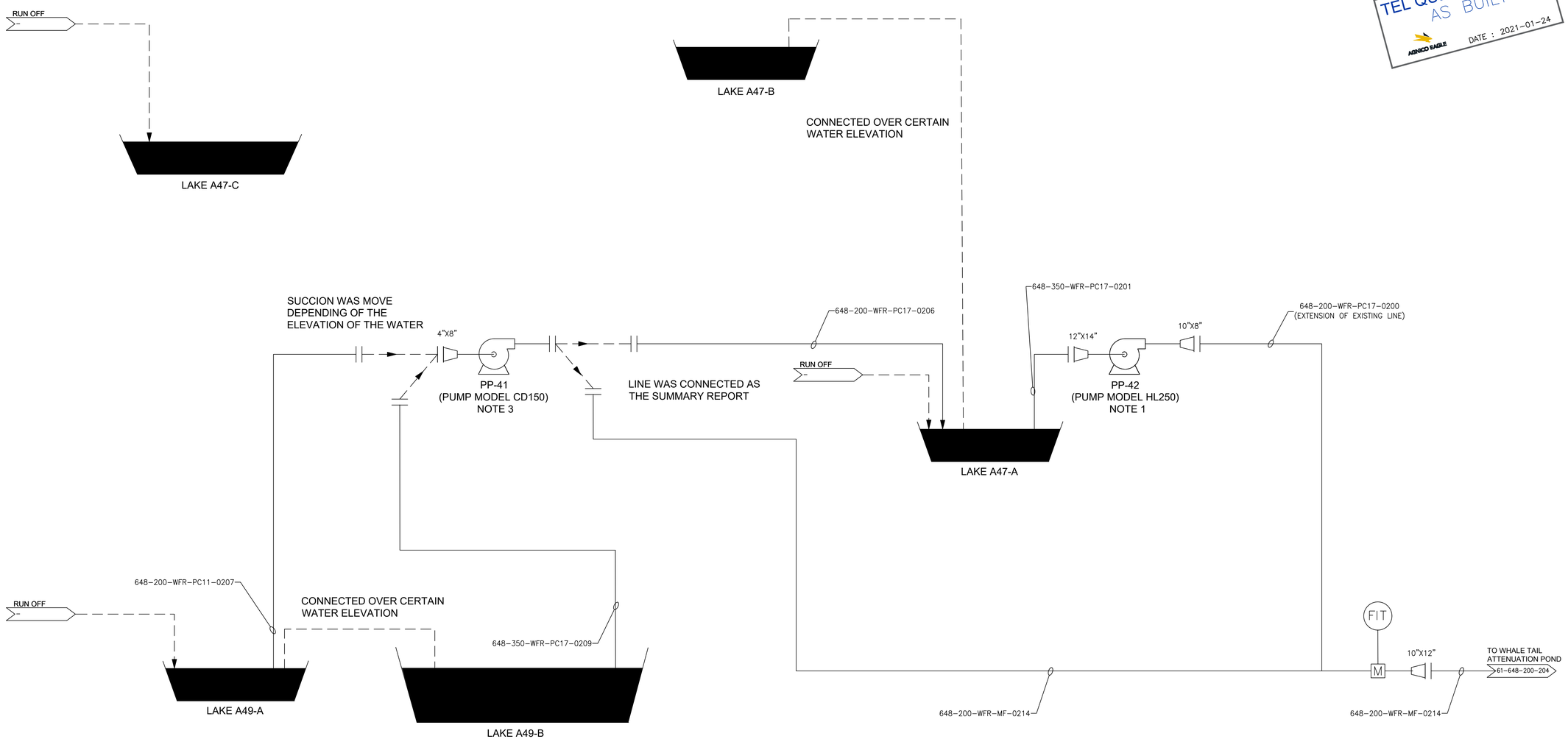

TEL QUE CONSTRUIT
AS BUILT
AGNICO EAGLE
DATE : 2021-01-24

PLAN CLÉ
KEY PLAN

SNC·LAVALIN

Mining & Metallurgy
5500, des Galeries Blvd., bur. 200, Quebec (Quebec), Canada G2K 2E2
Telephone: (418) 621-5500, Fax: (418) 621-8887

PROJECT No	SUBDIVISION	SUBJECT	SERIAL	REV.
668284	8000	49 D1	0001	E02

NOTES GÉNÉRALES / GENERAL NOTES

NOTES :

1. DEPENDING ON THE DEWATERING SEQUENCE, PUMP PP-44 COULD BE RE-USED FOR PUMP PP-41.
2. TO DEWATER LAKE A47-C, TWO CD103 PUMPS ARE REQUIRED TO PROVIDE A TOTAL DEWATERING FLOW RATE OVER 300 M3/H APPROX. TO ENSURE THAT IT OPERATES WITHIN ITS PUMP CURVE. ALTERNATIVELY, A TRASH PUMP COULD BE USED TO DEWATER THIS LAKE IF AVAILABLE.
3. DEWATERING OF LAKE A49-A SHALL OCCUR AFTER DEWATERING OF LAKE A47-C.

LEGEND:

——— PRIMARY STREAM
– – – – INTERMITTENT STREAM
|| FLANGED CONNECTION

DESSINS EN RÉFÉRENCE / REFERENCE DRAWINGS

TITRE / TITLE	# DWG

AGNICO EAGLE

REV.	DATE	DESCRIPTION	PAR/BY	APP.	CLIENT
R3	2021-01-23	AS BUILT	J.G.	B.R.	F.B.
R2	2020-07-09	ISSUED FOR DESIGN	D.C.	A.L.N.	A.L.
R1	2020-05-15	ISSUED FOR DESIGN	D.C.	A.L.N.	A.L.
R0	2020-03-20	ISSUED FOR DESIGN	D.C.	A.L.N.	A.L.
RB	2020-03-16	ISSUED FOR CLIENT COMMENTS	D.C.	A.L.N.	A.L.
R4	2021-03-02	AS BUILT WITH OP MODIF	J.G.	B.R.	F.B.

REVISIONS

TITRE / TITLE
AGNICO EAGLE – AMARUQ DIVISION
648 – DEWATERING

200 – PROCESS FLOWSHEET
AMARUQ DEWATERING PHASE
LAKES A47 & A49

DESSINÉ PAR / DRAWN BY	M. MOVILA	DATE 2020-03-02
VERIFIÉ PAR / CHECKED BY	D. CHEN	2020-03-02
APPROUVÉ PAR / APPROVED BY	A.L. NGUYEN	2020-03-02
ÉCHELLE / SCALE		DATE 2020-03-02

NO. DESSIN / DRAWING NO. 61-648-200-202

NO. PROJET / PROJECT NO.	REVISION	FEUILLE / SHT
6127	R4	1 / 1

AE-CART-ARCH D

FILE NO. 61-648-200-202_R4.dwg

DERNIÈRE SAUVEGARDE: 2021/02/03 – 9:31am
CHEMIN: Q:\Groups\AmaruqConst\6129 WhaleTail UG\60 Field Work\Personal File\Jessy Gauthier\Water managment\A5 Build\61-648-200-202_R4.dwg

NO. DESSIN
DRAWING NO. 61-648-200-203

FORMAT ARCHD

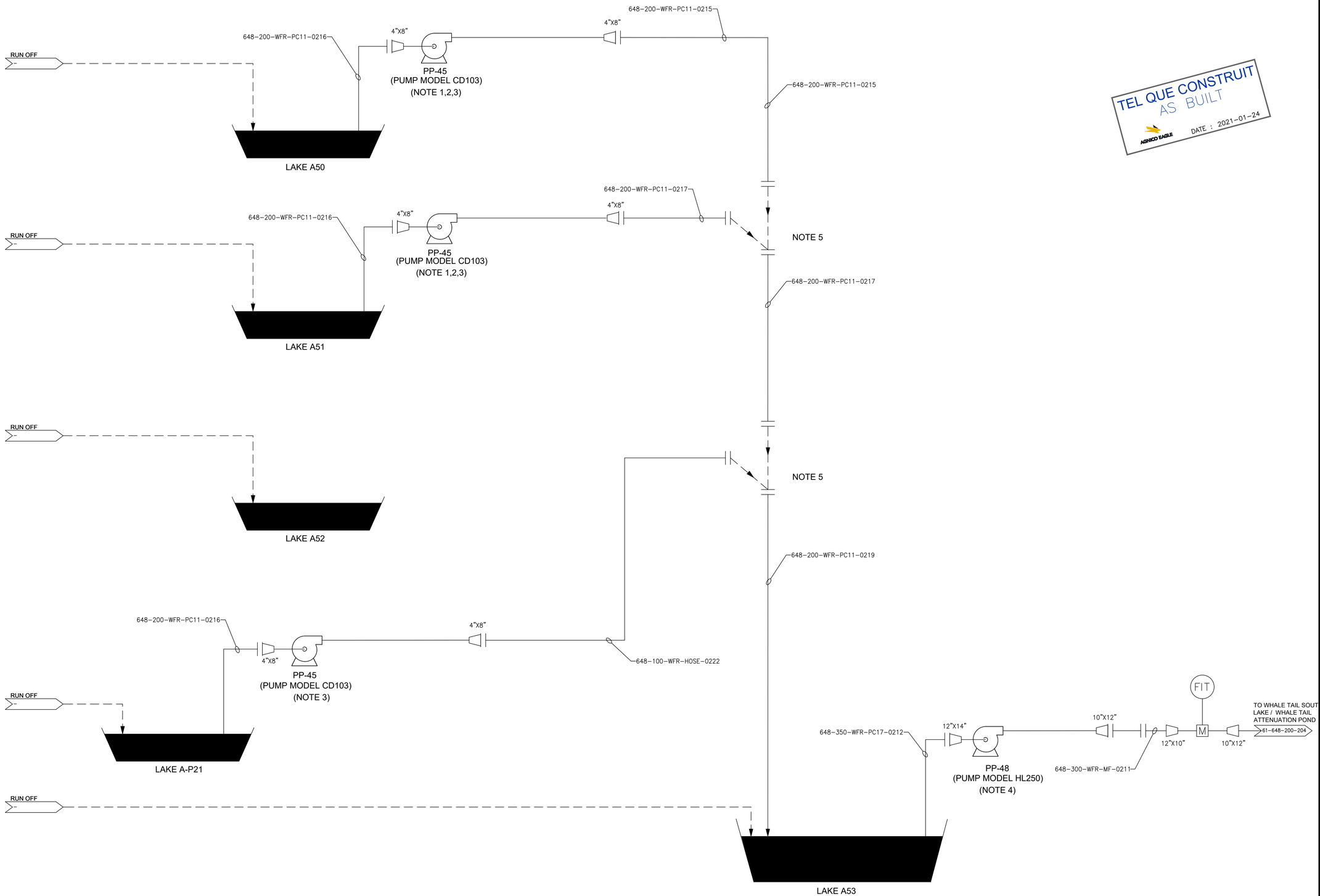

TEL QUE CONSTRUIT
AS BUILT
AGNICO EAGLE
DATE : 2021-01-24

PLAN CLÉ
KEY PLAN

SNC·LAVALIN
Mining & Metallurgy
5500, des Galeries Blvd., bur. 200, Quebec (Quebec), Canada G2K 2E2
Telephone: (418) 621-5500, Fax: (418) 621-8887

PROJECT No	SUBDIVISION	SUBJECT	SERIAL	REV.
668284	8000	49 D1	0002	E02

NOTES GÉNÉRALES / GENERAL NOTES

NOTES :

1. PUMP PP45 AND PP46 SHALL BE USED TO DEWATER SEQUENTIALLY LAKE A50, A51 AND A52.
2. TWO CD103 PUMPS ARE REQUIRED TO PROVIDE A TOTAL DEWATERING FLOW RATE OVER 300 M3/H APPROX. TO ENSURE THAT IT OPERATES WITHIN ITS PUMP CURVE.
3. DEPENDING ON THE LAKE DEWATERING SEQUENCE, PUMPS PP41 AND PP43 COULD BE USED TO DEWATER LAKE A50, A51, A52 AND A-P21.
4. DEPENDING ON THE LAKE DEWATERING SEQUENCE, PP40 OR PP44 COULD BE USED TO DEWATER LAKE A53.
5. CONNECTION TO BY-PASS LINES SHALL BE DONE BY FLANGE TO FLANGE DISCONNECTION AND RECONNECTION.

LEGEND:

——— PRIMARY STREAM

– – – – INTERMITTENT STREAM

|| FLANGED CONNECTION

DESSINS EN RÉFÉRENCE / REFERENCE DRAWINGS

TITRE / TITLE	# DWG

AGNICO EAGLE

REV.	DATE	DESCRIPTION	PAR/BY	APP.	CLIENT
R3	2021-01-23	AS BUILT	J.G.	B.R.	F.B.
R2	2020-07-09	ISSUED FOR DESIGN	D.C.	A.L.N.	A.L.
R1	2020-03-15	ISSUED FOR DESIGN	D.C.	A.L.N.	A.L.
R0	2020-03-20	ISSUED FOR DESIGN	D.C.	A.L.N.	A.L.
RB	2020-03-06	ISSUED FOR CLIENT COMMENTS	D.C.	A.L.N.	A.L.
RA	2020-03-02	ISSUED FOR COMMENTS	D.C.	A.L.N.	A.L.

REVISIONS

TITRE / TITLE
AGNICO EAGLE – AMARUQ DIVISION
648 – DEWATERING

200 – PROCESS FLOWSHEET
AMARUQ DEWATERING PHASE
LAKES A50, A51, A52 & A53

DESSINÉ PAR / DRAWN BY	M. MOVILA	DATE: 2020-03-02
VERIFIÉ PAR / CHECKED BY	D. CHEN	2020-03-02
APPROUVÉ PAR / APPROVED BY	A.L. NGUYEN	2020-03-02
ÉCHELLE / SCALE		DATE 2020-03-02

NO. DESSIN
DRAWING NO. 61-648-200-203

NO. PROJET / PROJECT NO.	REVISION	FEUILLE / SHT
6127	R3	1 / 1

AE-CART-ARCH D

FILE NO. 61-648-200-203_R3.dwg

DERNIÈRE SAUVEGARDE: 2021/02/02 – 3:38pm
CHEMIN: C:\Users\Jessy.gauthier\Desktop\New folder\61-648-200-203_R3.dwg

NO. DESSIN
DRAWING NO. 61-648-200-204

FORMAT ARCHD

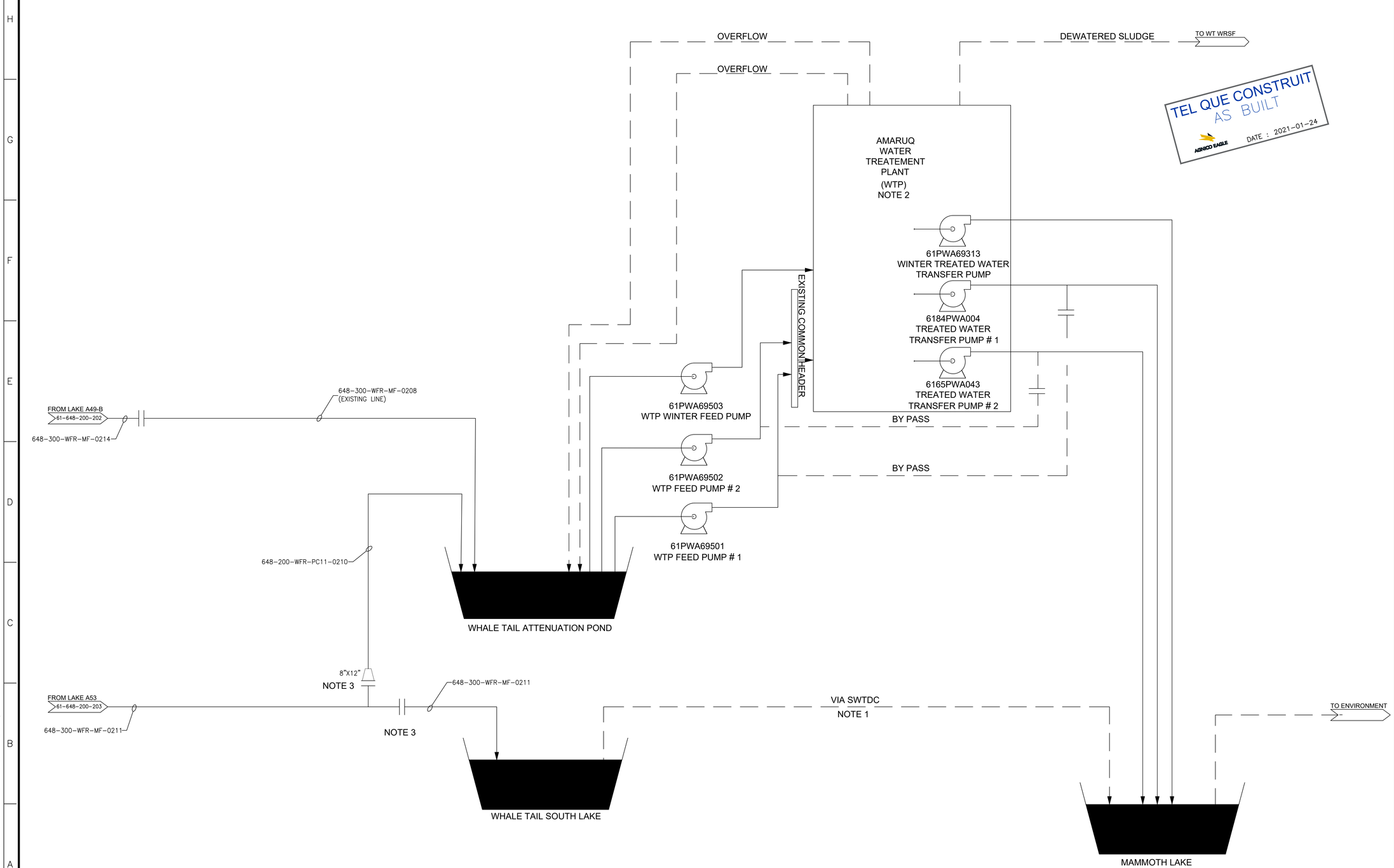

TEL QUE CONSTRUIT
AS BUILT
AGNICO EAGLE
DATE : 2021-01-24

PLAN CLÉ
KEY PLAN

SNC·LAVALIN
Mining & Metallurgy
5500, des Galeries Blvd., bur. 200, Quebec (Quebec), Canada G2K 2E2
Telephone: (418) 621-5500, Fax: (418) 621-8887

PROJECT No	SUBDIVISION	SUBJECT	SERIAL	REV.
668284	8000	49 D1	0003	E02

NOTES GÉNÉRALES / GENERAL NOTES

NOTES :

1. WHALE TAIL SOUTH LAKE SHALL OVERFLOW TO MAMMOTH LAKE VIA THE SOUTH WHALE TAIL DIVERSION CHANNEL (SWTDC).
2. THIS DRAWING SHOWS ONLY THE TIE-IN POINTS OF THE AMARUQ WTP.
3. CONNECTION TO BY-PASS LINES SHALL BE DONE BY FLANGE TO FLANGE DISCONNECTION AND RECONNECTION.

LEGEND:

PRIMARY STREAM
INTERMITTENT STREAM
FLANGED CONNECTION

DESSINS EN RÉFÉRENCE / REFERENCE DRAWINGS

TITRE / TITLE	# DWG

AGNICO EAGLE

REV.	DATE	DESCRIPTION	PAR/BY	APP.	CLIENT
R3	2021-01-23	AS BUILT	J.G.	B.R.	F.B.
R2	2020-07-09	ISSUED FOR DESIGN	D.C.	A.L.N.	A.L.
R1	2020-05-15	ISSUED FOR DESIGN	D.C.	A.L.N.	A.L.
R0	2020-03-20	ISSUED FOR DESIGN	D.C.	A.L.N.	A.L.
RB	2020-03-06	ISSUED FOR CLIENT COMMENTS	D.C.	A.L.N.	R.B.
RA	2020-03-02	ISSUED FOR COMMENTS	D.C.	A.L.N.	A.L.

REVISIONS

TITRE / TITLE
AGNICO EAGLE – AMARUQ DIVISION
648 – DEWATERING

200 – PROCESS FLOWSHEET
AMARUQ DEWATERING PHASE
WT ATTENUATION POND, WT SOUTH LAKE
& MAMMOTH LAKE

DESSINÉ PAR / DRAWN BY	M. MOVILA	DATE 2020-03-02
VERIFIÉ PAR / CHECKED BY	D. CHEN	2020-03-02
APPROUVÉ PAR / APPROVED BY	A.L. NGUYEN	2020-03-02
ÉCHELLE / SCALE		DATE 2020-03-02

NO. DESSIN / DRAWING NO. 61-648-200-204

NO. PROJET / PROJECT NO.	REVISION	FEUILLE / SHT
6127	R3	1 / 1

AE-CART-ARCH D

FILE NO. 61-648-200-204_R3.dwg

DERNIÈRE SAUVEGARDE: 2021/02/02 – 3:40pm
CHEMIN: C:\Users\jessy.gauthier\Desktop\New folder\61-648-200-204_R3.dwg

NO. DESSIN
DRAWING NO: 61-648-230-200

FORMAT ARCHD

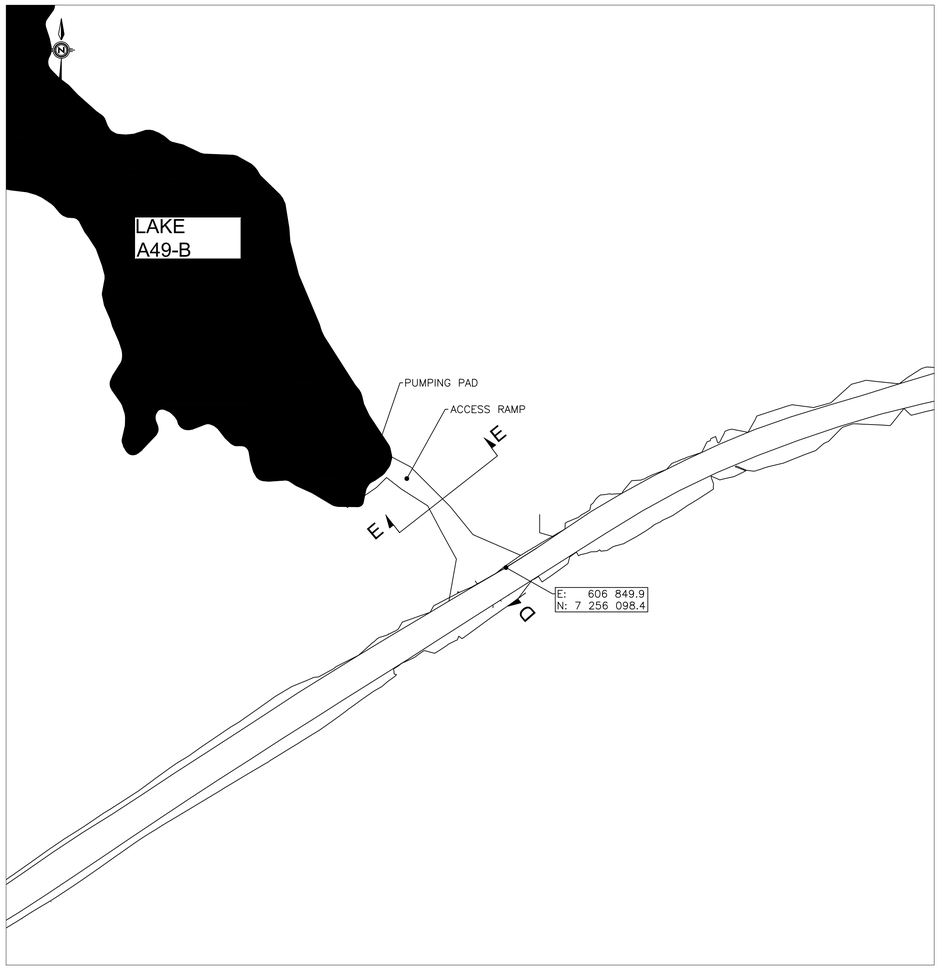

PLAN VIEW
ACCESS RAMP AND PUMPING PAD
LAKE A49-B
SCALE : 1: 1000

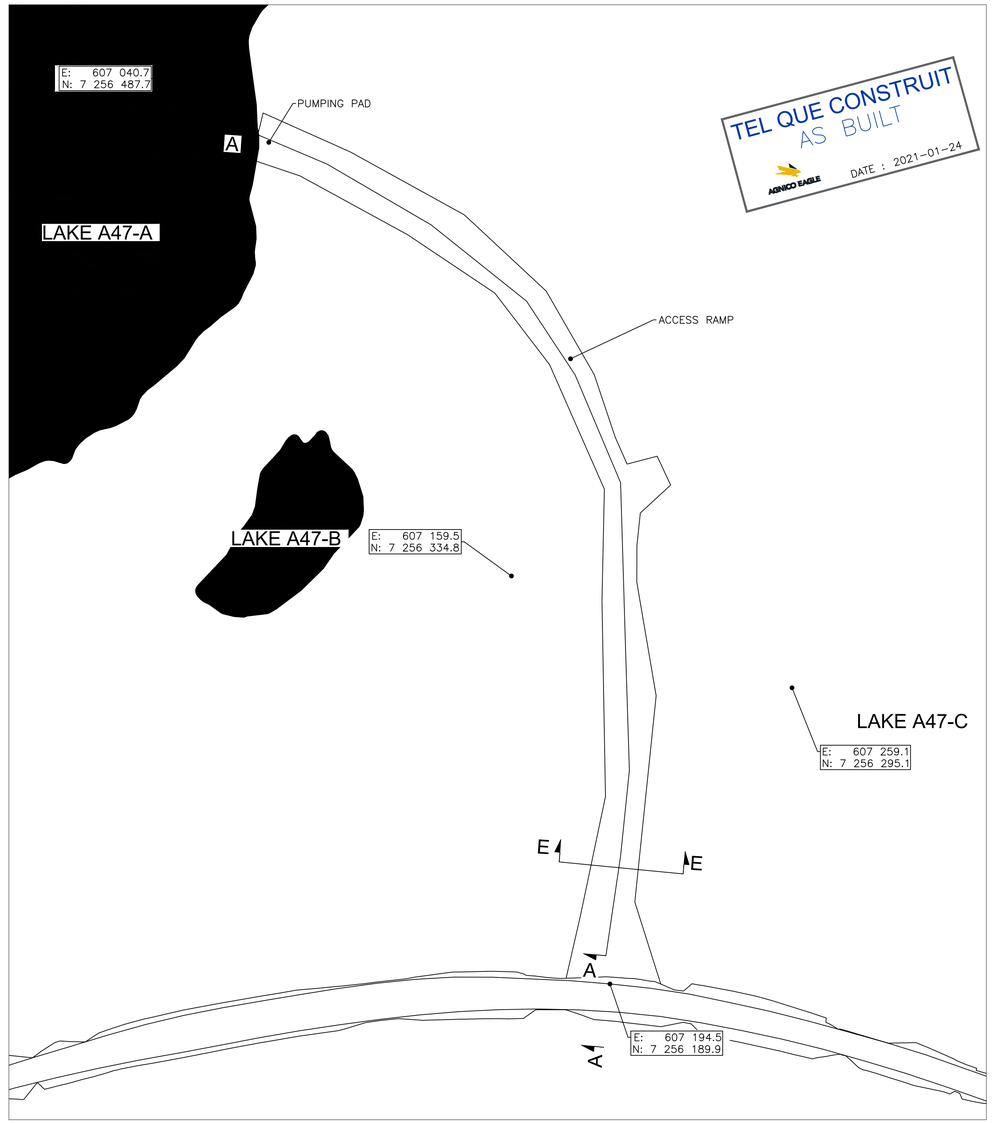

TEL QUE CONSTRUIT
AS BUILT
AGNICO EAGLE
DATE : 2021-01-24

PLAN VIEW
ACCESS RAMPS AND PUMPING PADS
LAKES A47-A, A47-B, A47-C
SCALE : 1: 1000

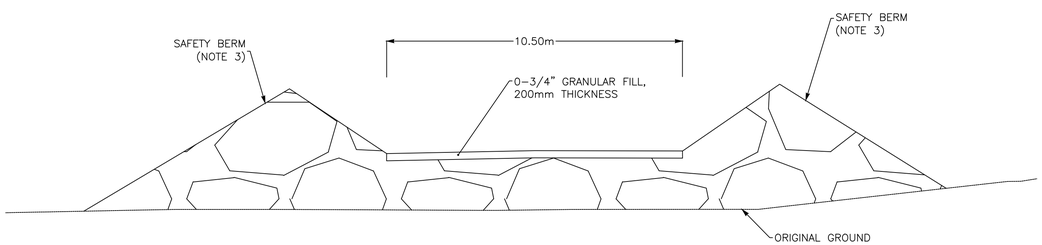

SECTION E-E
TYPICAL RAMP SECTION
SCALE : 1: 100

ESTIMATED IN-PLACE QUANTITIES CONSTRUCTION – ACCESS RAMPS AND PADS		
Lake (Access ramp and pad)	Granular fill, 0-3/4" (final grade, thickness 200 mm) (m^3)	Run-of-mine rockfill (0-1000 mm) (m^3)
A49-B	341.8	8945.2
A47-A	935.4	27177.2
A47-B	32.46	2275.7
A47-C	34.5	1082.6

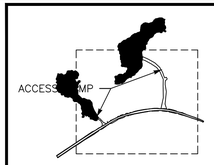

PLAN CLÉ / KEY PLAN

PROJECT No	SUBDIVISION	SUBJECT	SERIAL	REV.
668284	8000	4G DD	0001	E00

NOTES GÉNÉRALES / GENERAL NOTES

NOTES

1. GROUND TOPOGRAPHY WAS PROVIDED BY AEM.
2. ALL UNITS ARE IN METERS.
3. SAFETY BERMS SHALL BE BASED ON THE MINE ACT REQUIREMENTS.
4. STABILITY OF THE RAMPS TO BE ASSESSED ON A DAILY BASIS BY QUALIFIED GEOTECHNICAL PERSONNEL DURING CONSTRUCTION. WORK SHALL BE SUSPENDED IF SIGNS OF INSTABILITY ARE OBSERVED.
5. INITIAL ROCK FILL MATERIAL PLACEMENT IN WATER, AGAINST THE NATURAL SOIL OF THE LAKE, MUST BE PLACED USING A SHOVEL.
6. FOR ALL ROCK FILL PLACEMENT OVER WATER, SOME FOUNDATION PREPARATION MIGHT BE NEEDED DEPENDING ON NATURE AND THICKNESS OF SEDIMENT ENCOUNTERED

LEGEND

RUN-OF-MINE ROCKFILL 0-1000 MM

DESSINS EN RÉFÉRENCE / REFERENCE DRAWINGS

TITRE / TITLE	# DWG
–	–
–	–
–	–
–	–
–	–
–	–

AGNICO EAGLE

REV.	DATE	DESCRIPTION	PAR/BY	APP.	CLIENT
R1	2021-01-24	AS BUILT	J.G.	B.R.	F.B.
R0	2020-05-28	ISSUED FOR CONSTRUCTION	MA/DR/DC	ALN/HB	
RB	2020-03-30	ISSUED FOR CLIENT COMMENTS	MA/DR/DC	ALN	
RA	2020-03-23	ISSUED FOR INTERNAL COMMENTS	MA/DR/DC	ALN	

REVISIONS

TITRE / TITLE
0
648 – DEWATERING
230 – GENERAL EARTHWORKS

PLAN VIEW, PROFILES AND TYPICAL SECTIONS
AMARUQ DEWATERING PHASE
LAKES A47-A, A47-B, A47-C AND A49-B
ACCESS RAMPS AND PUMPING PADS

DESSINÉ PAR / DRAWN BY	MARIUS MOVILA	DATE 2020-03-23
VERIFIÉ PAR / CHECKED BY	DARIUSH RASTGOU/ DAN CHEN	2020-03-23
APPROUVÉ PAR / APPROVED BY	ANH-LONG NGUYEN	2020-03-23
ÉCHELLE / SCALE	AS SHOWN	DATE 2020-03-23
NO. DESSIN / DRAWING NO.	61-648-230-200	
NO. PROJET / PROJECT NO. 6127	REVISION R1	FEUILLE / SHT 1 / 2

AE-CART-ARCH D

FILE NO.

NO. DESSIN
DRAWING No. 61-648-230-200

FORMAT ARCHD

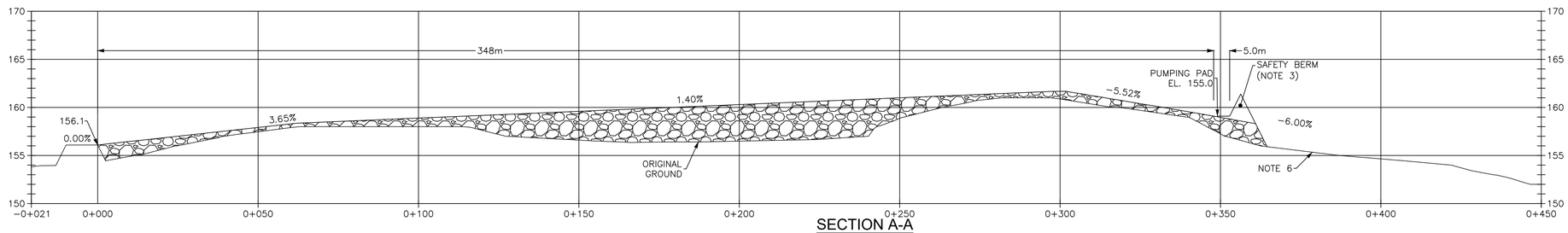

SECTION A-A
PROFILE LAKE A47-A RAMP

SCALE : H 1:750
V 1:250

NOT BUILT

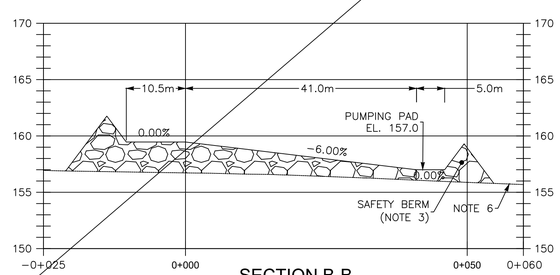

SECTION B-B
PROFILE LAKE A47-B RAMP

SCALE : H 1:500
V 1:250

NOT BUILT

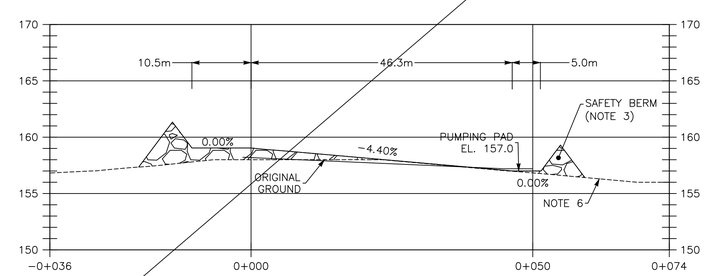

SECTION C-C
PROFILE LAKE A47-C RAMP

SCALE : H 1:500
V 1:250

NOT BUILT

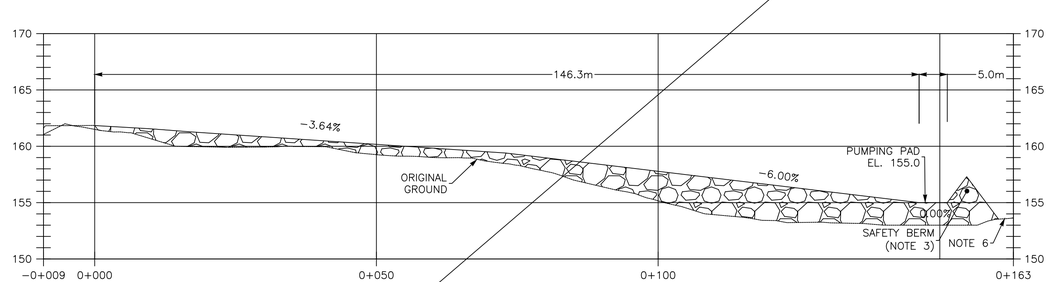

SECTION D-D
PROFILE LAKE A49-B RAMP

SCALE : H 1:500
V 1:250

TEL QUE CONSTRUIT
AS BUILT
AGNICO EAGLE
DATE : 2021-01-24

PROJECT No	SUBDIVISION	SUBJECT	SERIAL	REV.
668284	8000	4G DD	0001	E00

NOTES GÉNÉRALES / GENERAL NOTES

NOTES

1. GROUND TOPOGRAPHY WAS PROVIDED BY AEM.
2. ALL UNITS ARE IN METERS.
3. SAFETY BERMS SHALL BE BASED ON THE MINE ACT REQUIREMENTS.
4. STABILITY OF THE RAMPS TO BE ASSESSED ON A DAILY BASIS BY QUALIFIED GEOTECHNICAL PERSONNEL DURING CONSTRUCTION. WORK SHALL BE SUSPENDED IF SIGNS OF INSTABILITY ARE OBSERVED.
5. INITIAL ROCK FILL MATERIAL PLACEMENT IN WATER, AGAINST THE NATURAL SOIL OF THE LAKE, MUST BE PLACED USING A SHOVEL.
6. FOR ALL ROCK FILL PLACEMENT OVER WATER, SOME FOUNDATION PREPARATION MIGHT BE NEEDED DEPENDING ON NATURE AND THICKNESS OF SEDIMENT ENCOUNTERED.

LEGEND

RUN-OF-MINE
ROCKFILL 0-1000 MM

DESSINS EN RÉFÉRENCE / REFERENCE DRAWINGS

TITRE / TITLE	# DWG
—	—
—	—
—	—
—	—
—	—
—	—

AGNICO EAGLE

REV.	DATE	DESCRIPTION	PAR/BY	APP.	CLIENT
R1	2021-01-24	AS BUILT	J.G.	B.R.	F.B.
R0	2020-05-28	ISSUED FOR CONSTRUCTION	MK/RK/DC	ALN/HB	
RB	2020-03-30	ISSUED FOR CLIENT COMMENTS	MK/RK/DC	ALN	
RA	2020-03-23	ISSUED FOR INTERNAL COMMENTS	MK/RK/DC	ALN	

REVISIONS

TITRE / TITLE
AGNICO EAGLE – AMARUQ DIVISION
648 – DEWATERING
230 – GENERAL EARTHWORKS

PLAN VIEW, PROFILES AND TYPICAL SECTIONS
AMARUQ DEWATERING PHASE
LAKESA 47-A, A47-B, A47-C AND A49-B
ACCESS RAMPS AND PUMPING PADS

DESSINÉ PAR / DRAWN BY	MARIUS MOVILA	DATE 2020-03-23
VERIFIÉ PAR / CHECKED BY	DARIUSH RASTGOU/ DAN CHEN	2020-03-23
APPROUVÉ PAR / APPROVED BY	ANH-LONG NGUYEN	2020-03-23
ÉCHELLE / SCALE	AS SHOWN	DATE 2020-03-23
NO. DESSIN / DRAWING NO.	61-648-230-200	
NO. PROJET / PROJECT NO.	6127	REVISION R1 / FEUILLE / SHT 2 / 2

AE-CART-ARCH D

FILE NO.

NO. DESSIN
DRAWING NO. 61–648–230–201

FORMAT ARCHD

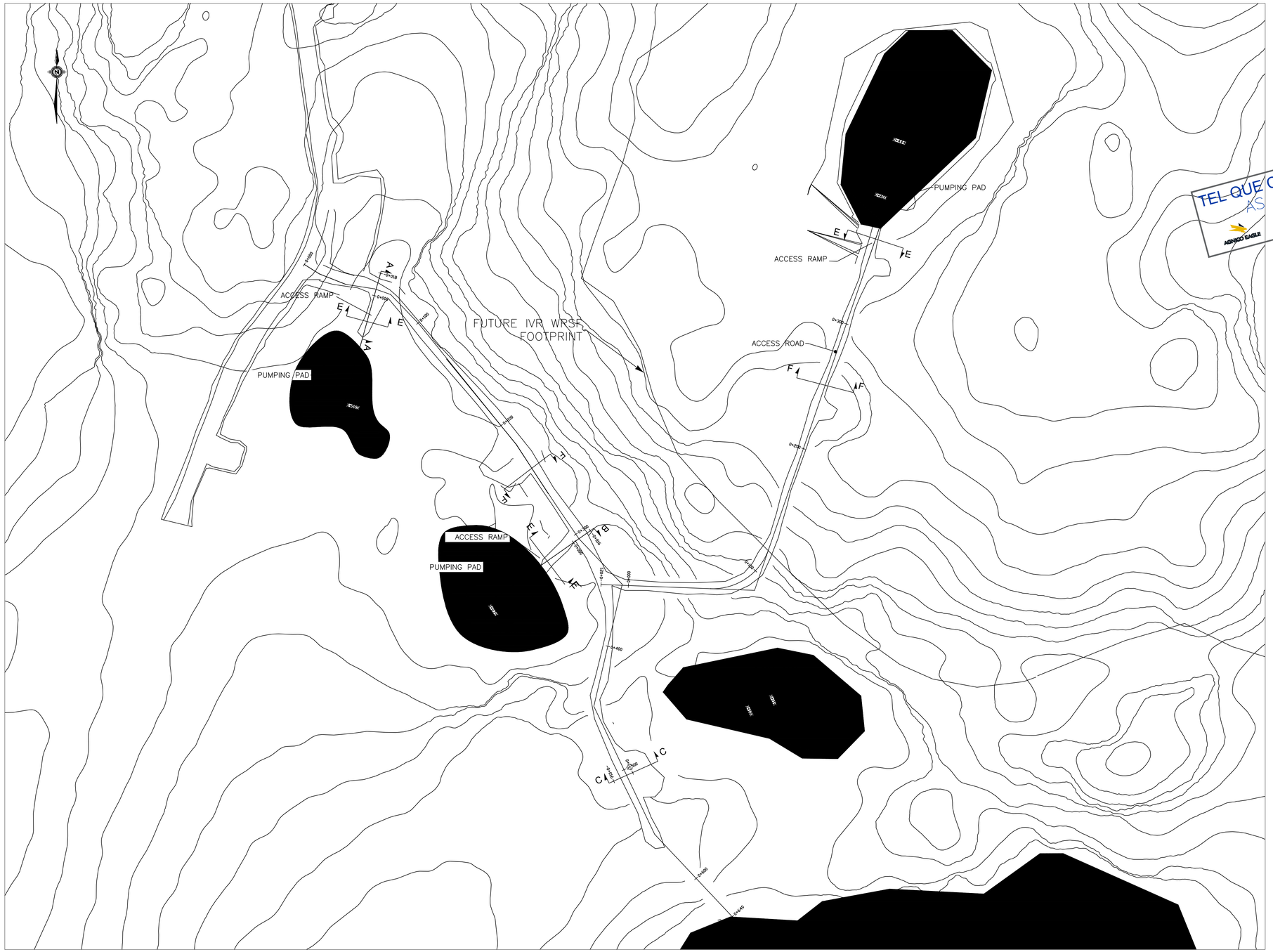

TEL QUE CONSTRUIT
AS BUILT
AGNICO EAGLE
DATE : 2021–01–24

PLAN VIEW
ACCESS RAMP AND PUMPING PAD
LAKE A50, A51, A52 AND A–P21
SCALE : 1: 1500

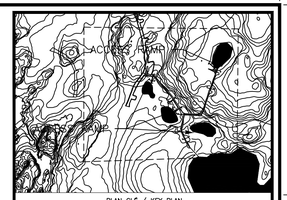

PLAN CLÉ / KEY PLAN

PROJECT No	SUBDIVISION	SUBJECT	SERIAL	REV.
668284	8000	4G DD	0002	E00

NOTES GÉNÉRALES / GENERAL NOTES

NOTES

1. GROUND TOPOGRAPHY WAS PROVIDED BY AEM.
2. ALL UNITS ARE IN METERS.
3. SAFETY BERMS SHALL BE BASED ON THE MINE ACT REQUIREMENTS.
4. STABILITY OF THE RAMPS TO BE ASSESSED ON A DAILY BASIS BY QUALIFIED GEOTECHNICAL PERSONNEL DURING CONSTRUCTION. WORK SHALL BE SUSPENDED IF SIGNS OF INSTABILITY ARE OBSERVED.
5. ROAD ALIGNMENT IS APPROXIMATE AND SHALL BE ADJUSTED DEPENDING ON FIELD CONDITIONS AND LOCAL TOPOGRAPHY.
6. INITIAL ROCKFILL MATERIAL PLACEMENT IN WATER, AGAINST THE NATURAL SOIL OF THE LAKE, MUST BE PLACED USING A SHOVEL.
7. THE ROAD AND RAMP CONSTRUCTION MATERIAL INSIDE THE FOOTPRINT OF THE FUTURE IVR WRSF SHALL BE EITHER PAG OR NPAG MATERIAL. THE USE OF PAG MATERIAL SHALL START APPROXIMATELY 8 METERS FROM THE TOE OF THE WRSF.
8. WATER LEVEL IN LAKES IS ESTIMATED BASED ON THE TOPOGRAPHY AROUND THE LAKE. THE ELEVATION IS APPROXIMATE AND SHALL BE VERIFIED AT THE SITE BEFORE THE START OF WORK. THE MINIMUM ALLOWABLE DIFFERENCE BETWEEN THE LAKE AND THE ROLLING SURFACE OF THE ROAD SHALL BE 0.5 METER.
9. PROVIDE SEMI–CULVERTS TO PROTECT EXISTING ELECTRICAL CABLES AND WIRES LOCATED AT THIS APPROXIMATE AREA.

LEGEND

RUN–OF–MINE
ROCKFILL 0–1000 MM

DESSINS EN RÉFÉRENCE / REFERENCE DRAWINGS

TITRE / TITLE	# DWG
—	—
—	—
—	—
—	—
—	—
—	—

AGNICO EAGLE

REV.	DATE	DESCRIPTION	PAR/BY	APP.	CLIENT
R1	2021–01–24	AS BUILT	J.G.	B.R.	F.B.
R0	2020–06–10	ISSUED FOR CONSTRUCTION	MM/DC/NQ	ALN/HB	
RB	2020–05–15	ISSUED FOR CLIENT COMMENTS	MM/DC/NQ	ALN/HB	
RA	2020–05–14	ISSUED FOR INTERNAL COMMENTS	MM/DC/NQ	ALN/HB	

REVISIONS

TITRE / TITLE
AGNICO EAGLE – AMARUQ DIVISION
648 – DEWATERING
230 – GENERAL EARTHWORKS

PLAN VIEW, PROFILES AND TYPICAL SECTIONS
AMARUQ DEWATERING PHASE
LAKES A50, A51, A52 AND A–P21
ACCESS RAMPS AND PUMPING PADS

DESSINÉ PAR / DRAWN BY	MARIUS MOVILA	DATE 2020–03–23
VERIFIÉ PAR / CHECKED BY	DAN CHEN	2020–03–23
APPROUVÉ PAR / APPROVED BY	ANH–LONG NGUYEN	2020–03–23
ÉCHELLE / SCALE	AS SHOWN	DATE 2020–03–23

NO. DESSIN / DRAWING NO. 61–648–230–201

NO. PROJET / PROJECT NO.	REVISION	FEUILLE / SHT
6127	R1	1 / 2

AE–CART–ARCH D

FILE NO.

DERNIÈRE SAUVEGARDE: 2021/02/02 – 3:43pm
CHEMIN: C:\Users\Jessy.gauthier\Desktop\New folder\61–648–230–201_R1.dwg

NO. DESSIN
DRAWING NO. 61-648-230-201

FORMAT ARCHD

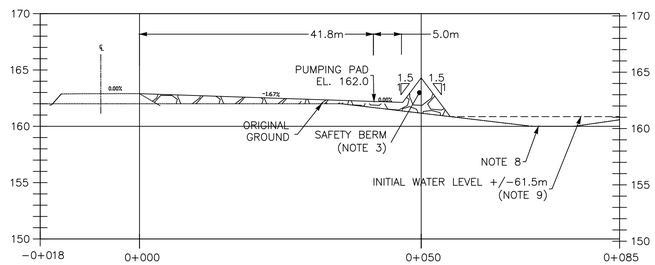

SECTION A-A
PROFILE LAKE A50 RAMP

SCALE : H 1:500
V 1:250

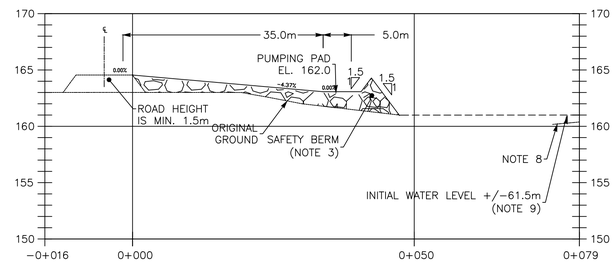

SECTION B-B
PROFILE LAKE A51 RAMP

SCALE : H 1:500
V 1:250

TEL QUE CONSTRUIT
AS BUILT
AGNICO EAGLE
DATE : 2021-01-24

ESTIMATED IN-PLACE QUANTITIES CONSTRUCTION – ACCESS RAMPS AND PADS		
Lake (Access ramp and pad)	Granular fill, 0-3/4" (final grade, thickness 200 mm) (m^3)	Run-of-mine rockfill (0-1000 mm) (m^3)
A50	159.8	2289.7
A51	153.2	3140.6
A52	238.3	7262.9
A-P21	121.9	5536.3

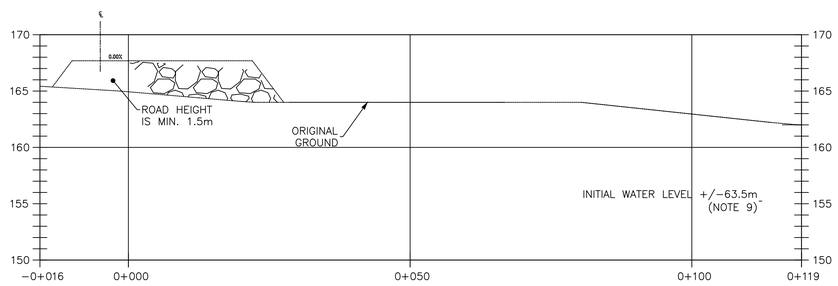

SECTION C-C
PROFILE LAKE A52 RAMP

SCALE : H 1:500
V 1:250

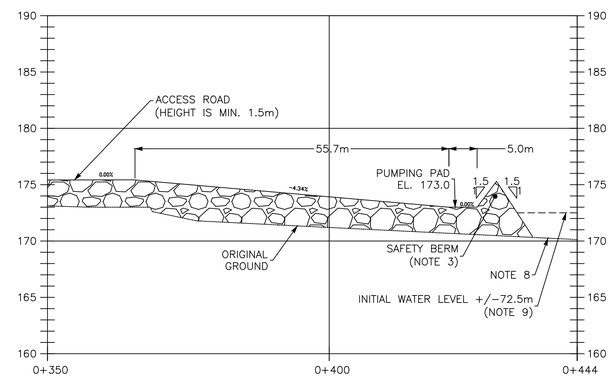

SECTION D-D
PROFILE LAKE A-P21 RAMP

SCALE : H 1:500
V 1:250

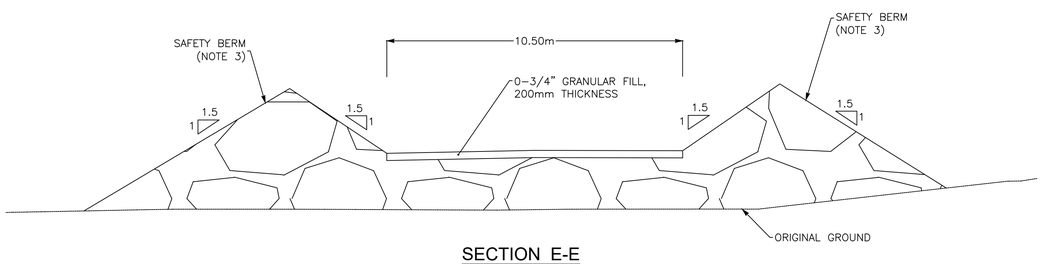

SECTION E-E
TYPICAL RAMP SECTION

SCALE : 1: 100

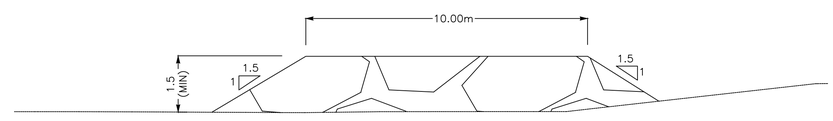

SECTION F-F
TYPICAL ROAD SECTION

SCALE : N.T.S.

PROJECT No	SUBDIVISION	SUBJECT	SERIAL	REV.
668284	8000	4G DD	0002	E00

NOTES GÉNÉRALES / GENERAL NOTES

NOTES
1. GROUND TOPOGRAPHY WAS PROVIDED BY AEM.
2. ALL UNITS ARE IN METERS.
3. SAFETY BERMS SHALL BE BASED ON THE MINE ACT REQUIREMENTS.
4. STABILITY OF THE RAMPS TO BE ASSESSED ON A DAILY BASIS BY QUALIFIED GEOTECHNICAL PERSONNEL DURING CONSTRUCTION. WORK SHALL BE SUSPENDED IF SIGNS OF INSTABILITY ARE OBSERVED.
5. ROAD ALIGNMENT IS APPROXIMATE AND SHALL BE ADJUSTED DEPENDING ON FIELD CONDITIONS AND LOCAL TOPOGRAPHY.
6. INITIAL ROCKFILL MATERIAL PLACEMENT IN WATER, AGAINST THE NATURAL SOIL OF THE LAKE, MUST BE PLACED USING A SHOVEL.
7. THE ROAD AND RAMP CONSTRUCTION MATERIAL INSIDE THE FOOTPRINT OF THE FUTURE IVR WRSF SHALL BE EITHER PAG OR NPAG MATERIAL. THE USE OF PAG MATERIAL SHALL START APPROXIMATELY 8 METERS FROM THE TOE OF THE WRSF.
8. FOR ALL ROCK FILL PLACEMENT OVER WATER, SOME FOUNDATION PREPARATION MIGHT BE NEEDED DEPENDING ON NATURE AND THICKNESS OF SEDIMENT ENCOUNTERED.
9. WATER LEVEL IN LAKES IS ESTIMATED BASED ON THE TOPOGRAPHY AROUND THE LAKE. THE ELEVATION IS APPROXIMATE AND SHALL BE VERIFIED AT THE SITE BEFORE THE START OF WORK. THE MINIMUM ALLOWABLE DIFFERENCE BETWEEN THE LAKE AND THE ROLLING SURFACE OF THE ROAD SHALL BE 0.5 METER.

LEGEND
RUN-OF-MINE ROCKFILL 0-1000 MM

DESSINS EN RÉFÉRENCE / REFERENCE DRAWINGS

TITRE / TITLE	# DWG
–	–
–	–
–	–
–	–
–	–
–	–

AGNICO EAGLE

REV.	DATE	DESCRIPTION	PAR/BY	APP.	CLIENT
R1	2021-01-24	AS BUILT	J.G.	B.R.	F.B.
R0	2020-06-10	ISSUED FOR CONSTRUCTION	MM/DC/NQ	AJN/HB	
RB	2020-05-15	ISSUED FOR CLIENT COMMENTS	MM/DC/NQ	AJN/HB	
RA	2020-05-14	ISSUED FOR INTERNAL COMMENTS	MM/DC/NQ	AJN/HB	

REVISIONS

TITRE / TITLE
AGNICO EAGLE – AMARUQ DIVISION
648 – DEWATERING
230 – GENERAL EARTHWORKS

PLAN VIEW, PROFILES AND TYPICAL SECTIONS
AMARUQ DEWATERING PHASE
LAKES A50, A51, A52 AND A-P21
ACCESS RAMPS AND PUMPING PADS

DESSINÉ PAR / DRAWN BY	MARIUS MOVILA	DATE 2020-03-23
VERIFIÉ PAR / CHECKED BY	DAN CHEN	2020-03-23
APPROUVÉ PAR / APPROVED BY	ANH-LONG NGUYEN	2020-03-23
ÉCHELLE / SCALE	AS SHOWN	DATE 2020-03-23
NO. DESSIN / DRAWING NO.	61-648-230-201	
NO. PROJET / PROJECT NO. 6127	REVISION R1	FEUILLE / SHT 2 / 2

FILE NO.

AE-CART-ARCH D

DERNIÈRE SAUVEGARDE: 2021/02/03 – 8:05am
CHEMIN: O:\Groups\AmaruqConst\6129 WhaleTail UG\60 Field Work\Personal File\Jessy Gauthier\Water managment\AS Build\61-648-230-201_R1.dwg

NO. DESSIN DRAWING NO. 61-648-270-202

FORMAT ARCHD

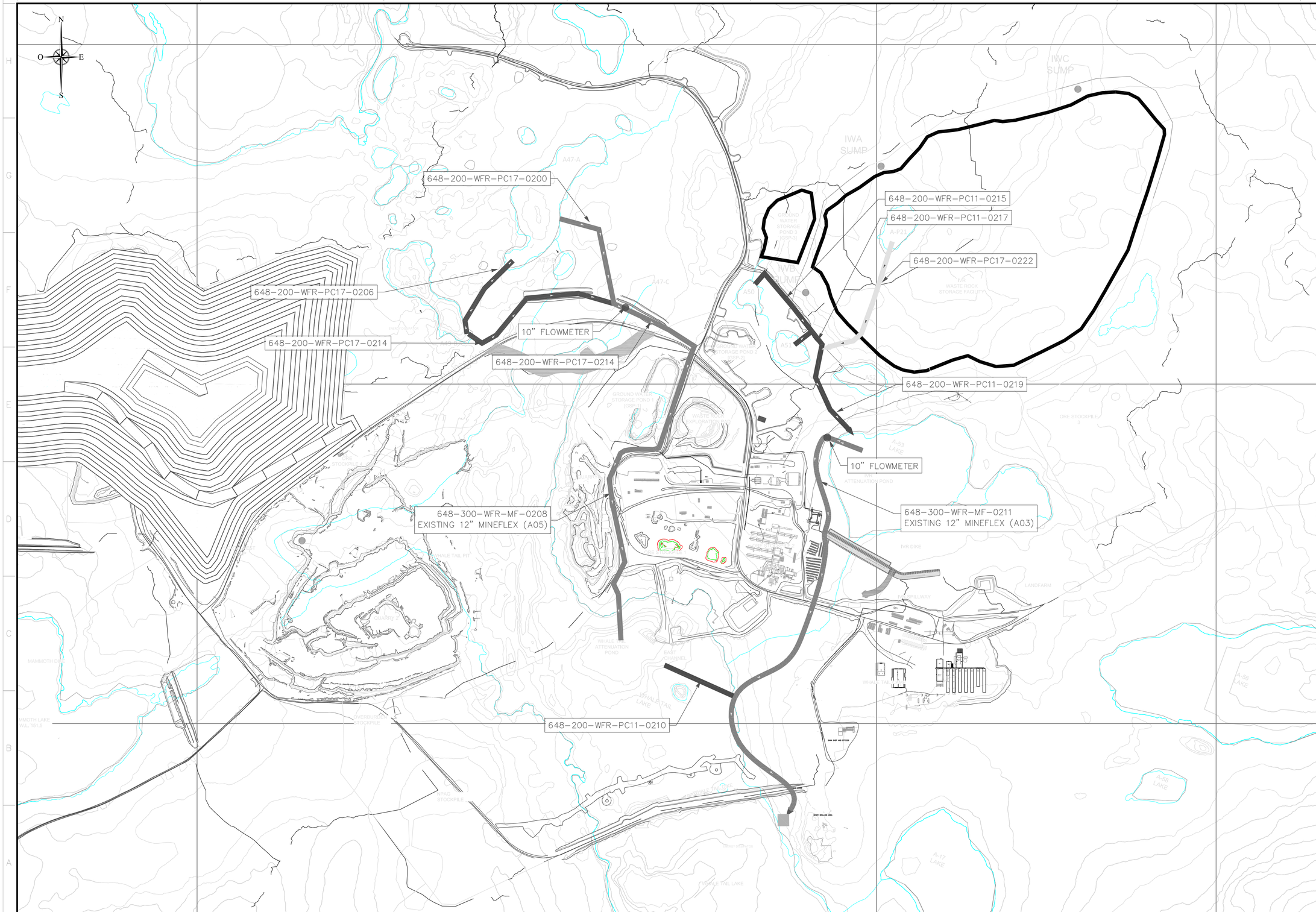

PLAN CLÉ
KEY PLAN

TEL QUE CONSTRUIT
AS BUILT
AGNICO EAGLE
DATE : 2021-01-24

PROJECT No.	SUBDIVISION	SUBJECT	SERIAL	REV.
6128284	6006	40 - 00	0041	R03

NOTES GÉNÉRALES / GENERAL NOTES

NOTES :

1. ONLY PUMP DISCHARGE LINES ARE SHOWN. PUMP SUCTION LINES ARE NOT SHOWN.
2. DEPENDING ON THE DEWATERING SEQUENCE, PUMPS AND LINES CAN BE MOVED FROM ONE AREA TO ANOTHER.
3. PIPING ARRANGEMENT SHOWN ON THE LAYOUT CAN BE FIELD ADJUSTED BASED ON SITE CONDITIONS.
4. FLOW METER LOCATION IS APPROXIMATE AND CAN BE FIELD ADJUSTED BASED ON SITE CONDITIONS.

LEGEND:

- 4" NON-INSULATED HOSE
- 6" NOMINAL NON-INSULATED (DR11)
- 8" NOMINAL NON-INSULATED (DR17)
- 12" MINEFLEX HOSE
- ENERGY DISSIPATOR

DESSINS EN RÉFÉRENCE / REFERENCE DRAWINGS

TITRE / TITLE	# DWG
–	–
–	–
–	–
–	–
–	–
–	–

AGNICO EAGLE

REV.	DATE	DESCRIPTION	PAR/BY	APP.	CLIENT
R3	2021-01-24	AS BUILT	J.G.	B.R.	F.B.
R2	2020-07-09	ISSUED FOR DESIGN	D.C.	A.L.N.	A.L.
R1	2020-05-15	ISSUED FOR DESIGN	D.C.	A.L.N.	A.L.
R0	2020-04-01	ISSUED FOR DESIGN	M.M	A.L.N.	A.L.
RB	2020-03-19	ISSUED FOR CLIENT COMMENTS	M.M.	A.L.N.	A.L.
RA	2020-03-10	ISSUED FOR INIERNAL COMMENTS	M.M.	A.L.N.	A.L.

REVISIONS

TITRE / TITLE

AGNICO EAGLE – AMARUQ DIVISION
695 – WATER MANAGEMENT
270 – PIPING

PLAN VIEW
AMARUQ DEWATERING PHASE
PIPING LAYOUT

DESSINÉ PAR / DRAWN BY	MARIUS MOVILA	DATE 200-03-11
VERIFIÉ PAR / CHECKED BY	ANH-LONG NGUYEN	200-03-11
APPROUVÉ PAR / APPROVED BY	ALEXANDRE LAVALLÉE	200-03-11
ÉCHELLE / SCALE	AS SHOWN	DATE 200-03-11

NO. DESSIN / DRAWING NO. 61-648-270-202

NO. PROJET / PROJECT NO.	REVISION	FEUILLE / SHT
6127	R3	1 / 1

AE-CART-ARCH D

O:\Groups\AmaruqConst\6127 AMA Water Management\60 Field Work\40 Reporting\Dewatering As-Built Report (648)\2021-02-03_As Built
Rev\61-648-270-202_R3.dwg-2013-02-19 12:48:32

FILE NO.

Appendix D

Mechanical completion

AGNICO EAGLE

FEUILLE DE VÉRIFICATION / *INSPECTION SHEET*

Tuyauterie / *Piping*

Secteur / *Sector* :	648	**Préparé par** / *Prepared by* :	Jessy gauthier
Équipement / *Equipment:*	648-200-WFR-PC17-0200	**Date :**	**P&ID #** 61-648-200-202
Sous-Équipement / *Sub-Equip.* :		**No. Formulaire** / *Form No.* :	**MEC-POV-018**

INSPECTION VISUELLE (VPO) / *VISUAL INSPECTION (POV)*

1.01	Vérification des tags de couleur, toutes du bon type / *Tags verification, all of correct type*	☐
1.02	Cadenassage et inspection sécuritaire / *Pad locking and secure inspection conditions*	☐
1.03	Installation selon dessins / *Installation as per erection drawings*	☑ No Gasket
1.04	Structures et reforts complet et bien boulonnés / *Support structures complete and bolted*	☑
1.05	Sécuriser le périmètre avec les rubans de sécurité / *Secure perimeter with ribbon*	☐
2.02	Secteur de tuyauterie isolé aux bons endroits / *Blanks installed at the correct locations*	☑
2.03	Équipements isolés de la tuyauterie / *Equipment isolated from piping*	☑
2.04	Supports à ressorts bloqués / *Spring supports blocked*	☐
2.05	Filtres temporaires installés / *Temporary strainers installed*	☐
2.06	Valves anti-retour maintenues en positions ouvertes / *Check valves locked open*	☐
2.07	Drains et évents installés / *Drains and vents installed*	☐
2.08	Dispositif d'expansion thermique en place / *Thermal expansion system installed*	☐
2.09	Lavage initial des lignes et vidange faite / *Initial flushing and cleaning done*	☐

TESTS (TPO) / *TESTS (POT)*

3.01	Est-ce que les autorités locales doivent assister au test? / *Are local authority required to withness test?*		
3.02	Oui (nom) / *Yes (name)*	☐	
3.03	Non / *No*	☐	
3.04	Pompe/compresseur de test et manomètres / *Test pump/compressor and gauges installed*	☐	
3.05	Remplir la ligne / *Line filled*	☐	
3.06	Purger l'air de la ligne / *Air purged from line*	☐	
3.07	Fermer les évents / *Vents closed*	☐	
3.08	Fluide de test à moins de 50°C / *Test fluid at less than 50°C*	☐	
3.09	Test de pression complété / *Pressure test completed*	☐	Formulaire / *Form* MEC-POV-019
3.10	Ligne lavée et vidée / *Line flushed and cleaned*	☐	
3.11	Vidanger les points bas dans la ligne / *Empty low points of line*	☐	
3.12	Retirer les disques d'isolation de tuyauterie / *Remove piping blanks and plugs*	☐	
3.13	Équipements et valves reconnectés / *Equipments and valves reconnected*	☐	
3.14	Stériliser / *Sterilization*	☐	
3.15	Décapage et passivation (acier inoxydable) / *Pickling and passivation (Stainless steel)*	☐	

Partial Service Test J.G. OK

SIGNATURES (VPO) / *SIGNATURES (POV)*

Exécutant Construction / *Construction Performer* Date:_____	Exécutant Commissioning / *Comm. Performer* Date:_____ Jessy Gauthier

AGNICO EAGLE

FEUILLE DE VÉRIFICATION / *INSPECTION SHEET*

Tuyauterie / *Piping*

TESTS (TPO) / *TESTS (POT)*

4.01	Essais en pleine charge / *Full load trials* Date (DD/MM/YY)	
4.02	Identification installée sur les tuyaux / *Piping identification installed*	☐
4.03	Actionner les valves / *Operate valves*	☐
4.04	Valider la direction fluides selon l'identification / *Check flow direction according to markings*	☑
4.05	Ajuster les valves / *Adjust valves*	☐
4.06	Aucunes fuites à la pression d'opération / *No leakage at operating pressure*	☑
4.07	Opération du système correcte / *System operating correctly*	☑
4.08	Vidanger la tuyauterie / *Flush out line*	☐
4.09	Filtres temporaires retirés / *Temporary strainers removed*	☐
4.10	Isolation de la tuyauterie installée et conforme aux spécifications / *Piping insulation installed as per specifications*	
	Épaisseur d'isolation / *Insulation thickness*	☐
	Type d'isolant utilisé / *Insulation type installed*	☐
	Type de recouvrement d'isolant utilisé / *Insulation jacketing type installed*	☐
	Validation de la compatibilité de l'isolant spécifié avec le procédé / *Validate insulation compatibility with process*	☐

DOCUMENTATION / *DOCUMENTATION*

5.01	Dessins certifiés reçus du fournisseur / *Vendor certified drawings received*	☐
5.02	Manuels d'instructions reçus du fournisseur / *Vendor instruction manuals received*	☐
5.03	Certificat de conformité obtenu des authorités locales / *Local authority certificate obtained*	☐

6.00 REMARQUES / *REMARKS*

No leak on the partial line (system modificat.

Suite au verso / *Continuation on back* ☐ Suite feuille suivante / *Continuation on next sheet* ☐

SIGNATURES (TPO) / *SIGNATURES (POT)*

Exécutant Commissioning / Comm. performer	Responsable AEM / *AEM Responsible*
Date:_____	Date:_____
Jessey Gente	Jessy Gente

Étiquettes & cadenas changés / *Tags & padlocks changed* ☐

Initialer ce que vous avez fait / *Initial things you have done*

No	Par/*By*	Revision	Date
1			
2	M.G.	Information isolation et autres corrections	1/25/2019
3			

AEM **Rév.:02**

AGNICO EAGLE

FEUILLE DE VÉRIFICATION / *INSPECTION SHEET*

Tuyauterie / *Piping*

Secteur / *Sector* :	648	**Préparé par** / *Prepared by* :	Jessy gauthier
Équipement / *Equipment:*	648-300-WFR-MF-0208	**Date :**	**P&ID #** 61-648-200-202
Sous-Équipement / *Sub-Equip.* :		**No. Formulaire** / *Form No.* :	**MEC-POV-018**

INSPECTION VISUELLE (VPO) / *VISUAL INSPECTION (POV)*

1.01	Vérification des tags de couleur, toutes du bon type / *Tags verification, all of correct type*	☑
1.02	Cadenassage et inspection sécuritaire / *Pad locking and secure inspection conditions*	☑
1.03	Installation selon dessins / *Installation as per erection drawings*	☑ No Gasket
1.04	Structures et reforts complet et bien boulonnés / *Support structures complete and bolted*	☑
1.05	Sécuriser le périmètre avec les rubans de sécurité / *Secure perimeter with ribbon*	☑
2.02	Secteur de tuyauterie isolé aux bons endroits / *Blanks installed at the correct locations*	☑
2.03	Équipements isolés de la tuyauterie / *Equipment isolated from piping*	☑
2.04	Supports à ressorts bloqués / *Spring supports blocked*	☑
2.05	Filtres temporaires installés / *Temporary strainers installed*	☑
2.06	Valves anti-retour maintenues en positions ouvertes / *Check valves locked open*	☑
2.07	Drains et évents installés / *Drains and vents installed*	☑
2.08	Dispositif d'expansion thermique en place / *Thermal expansion system installed*	☑
2.09	Lavage initial des lignes et vidange faite / *Initial flushing and cleaning done*	☑

TESTS (TPO) / *TESTS (POT)*

3.01	Est-ce que les autorités locales doivent assister au test? / *Are local authority required to withness test?*		
3.02	Oui (nom) / *Yes (name)*	☐	
3.03	Non / *No*	☐	
3.04	Pompe/compresseur de test et manomètres / *Test pump/compressor and gauges installed*	☐	
3.05	Remplir la ligne / *Line filled*	☐	
3.06	Purger l'air de la ligne / *Air purged from line*	☐	
3.07	Fermer les évents / *Vents closed*	☐	
3.08	Fluide de test à moins de 50°C / *Test fluid at less than 50°C*	☐	
3.09	Test de pression complété / *Pressure test completed*	☐	Formulaire / *Form* MEC-POV-019
3.10	Ligne lavée et vidée / *Line flushed and cleaned*	☐	
3.11	Vidanger les points bas dans la ligne / *Empty low points of line*	☐	
3.12	Retirer les disques d'isolation de tuyauterie / *Remove piping blanks and plugs*	☐	
3.13	Équipements et valves reconnectés / *Equipments and valves reconnected*	☐	
3.14	Stériliser / *Sterilization*	☐	
3.15	Décapage et passivation (acier inoxydable) / *Pickling and passivation (Stainless steel)*	☐	

Service test ok J.G.

SIGNATURES (VPO) / *SIGNATURES (POV)*

Exécutant Construction / *Construction Performer* Date:_____	Exécutant Commissioning / *Comm. Performer* Date:_____ Jessy Gauthier

AGNICO EAGLE

FEUILLE DE VÉRIFICATION / *INSPECTION SHEET*

Tuyauterie / *Piping*

TESTS (TPO) / *TESTS (POT)*

4.01	Essais en pleine charge / *Full load trials* Date (DD/MM/YY)	
4.02	Identification installée sur les tuyaux / *Piping identification installed*	☐
4.03	Actionner les valves / *Operate valves*	☐
4.04	Valider la direction fluides selon l'identification / *Check flow direction according to markings*	☑
4.05	Ajuster les valves / *Adjust valves*	☐
4.06	Aucunes fuites à la pression d'opération / *No leakage at operating pressure*	☑
4.07	Opération du système correcte / *System operating correctly*	☑
4.08	Vidanger la tuyauterie / *Flush out line*	☐
4.09	Filtres temporaires retirés / *Temporary strainers removed*	☐
4.10	Isolation de la tuyauterie installée et conforme aux spécifications / *Piping insulation installed as per specifications*	
	Épaisseur d'isolation / *Insulation thickness*	☐
	Type d'isolant utilisé / *Insulation type installed*	☐
	Type de recouvrement d'isolant utilisé / *Insulation jacketing type installed*	☐
	Validation de la compatibilité de l'isolant spécifié avec le procédé / *Validate insulation compatibility with process*	☐

DOCUMENTATION / *DOCUMENTATION*

5.01	Dessins certifiés reçus du fournisseur / *Vendor certified drawings received*	☐
5.02	Manuels d'instructions reçus du fournisseur / *Vendor instruction manuals received*	☐
5.03	Certificat de conformité obtenu des authorités locales / *Local authority certificate obtained*	☐

6.00 REMARQUES / *REMARKS*

No leak

Suite au verso / *Continuation on back* ☐ Suite feuille suivante / *Continuation on next sheet* ☐

SIGNATURES (TPO) / *SIGNATURES (POT)*

Exécutant Commissioning / Comm. performer	Responsable AEM / *AEM Responsible*
Date:_____	Date:_____
Jessey Gauthier	Jessey Gauthier

Étiquettes & cadenas changés / *Tags & padlocks changed* ☐

Initialer ce que vous avez fait / *Initial things you have done*

No	Par/*By*	Revision	Date
1			
2	M.G.	Information isolation et autres corrections	1/25/2019
3			

AEM **Rév.:02**

AGNICO EAGLE

FEUILLE DE VÉRIFICATION / *INSPECTION SHEET*

Tuyauterie / *Piping*

Secteur / *Sector* :	648	**Préparé par** / *Prepared by* :	Jessy gauthier
Équipement / *Equipment:*	648-300-WFR-MF-214	**Date :**	**P&ID #** 61-648-200-202
Sous-Équipement / *Sub-Equip.* :		**No. Formulaire** / *Form No.* :	**MEC-POV-018**

INSPECTION VISUELLE (VPO) / *VISUAL INSPECTION (POV)*

1.01	Vérification des tags de couleur, toutes du bon type / *Tags verification, all of correct type*	☒	
1.02	Cadenassage et inspection sécuritaire / *Pad locking and secure inspection conditions*	☒	
1.03	Installation selon dessins / *Installation as per erection drawings*	☑	No Gasket
1.04	Structures et reforts complet et bien boulonnés / *Support structures complete and bolted*	☑	
1.05	Sécuriser le périmètre avec les rubans de sécurité / *Secure perimeter with ribbon*	☒	
2.02	Secteur de tuyauterie isolé aux bons endroits / *Blanks installed at the correct locations*	☑	
2.03	Équipements isolés de la tuyauterie / *Equipment isolated from piping*	☑	
2.04	Supports à ressorts bloqués / *Spring supports blocked*	☒	
2.05	Filtres temporaires installés / *Temporary strainers installed*	☒	
2.06	Valves anti-retour maintenues en positions ouvertes / *Check valves locked open*	☒	
2.07	Drains et évents installés / *Drains and vents installed*	☒	
2.08	Dispositif d'expansion thermique en place / *Thermal expansion system installed*	☒	
2.09	Lavage initial des lignes et vidange faite / *Initial flushing and cleaning done*	☒	

TESTS (TPO) / *TESTS (POT)*

3.01	Est-ce que les autorités locales doivent assister au test? / *Are local authority required to withness test?*		
3.02	Oui (nom) / *Yes (name)*	☐	
3.03	Non / *No*	☐	
3.04	Pompe/compresseur de test et manomètres / *Test pump/compressor and gauges installed*	☐	
3.05	Remplir la ligne / *Line filled*	☐	
3.06	Purger l'air de la ligne / *Air purged from line*	☐	
3.07	Fermer les évents / *Vents closed*	☐	
3.08	Fluide de test à moins de 50°C / *Test fluid at less than 50°C*	☐	
3.09	Test de pression complété / *Pressure test completed*	☐	Formulaire / *Form* MEC-POV-019
3.10	Ligne lavée et vidée / *Line flushed and cleaned*	☐	
3.11	Vidanger les points bas dans la ligne / *Empty low points of line*	☐	
3.12	Retirer les disques d'isolation de tuyauterie / *Remove piping blanks and plugs*	☐	
3.13	Équipements et valves reconnectés / *Equipments and valves reconnected*	☐	
3.14	Stériliser / *Sterilization*	☐	
3.15	Décapage et passivation (acier inoxydable) / *Pickling and passivation (Stainless steel)*	☐	

Partial

Service test OK J.G.

SIGNATURES (VPO) / *SIGNATURES (POV)*

Exécutant Construction / *Construction Performer* Date:_____	Exécutant Commissioning / *Comm. Performer* Date:_____
	Jessey Gauthier

AGNICO EAGLE

FEUILLE DE VÉRIFICATION / *INSPECTION SHEET*

Tuyauterie / *Piping*

TESTS (TPO) / *TESTS (POT)*

4.01	Essais en pleine charge / *Full load trials* Date (DD/MM/YY)	
4.02	Identification installée sur les tuyaux / *Piping identification installed*	☐
4.03	Actionner les valves / *Operate valves*	☐
4.04	Valider la direction fluides selon l'identification / *Check flow direction according to markings*	☑
4.05	Ajuster les valves / *Adjust valves*	☐
4.06	Aucunes fuites à la pression d'opération / *No leakage at operating pressure*	☑
4.07	Opération du système correcte / *System operating correctly*	☑
4.08	Vidanger la tuyauterie / *Flush out line*	☐
4.09	Filtres temporaires retirés / *Temporary strainers removed*	☐
4.10	Isolation de la tuyauterie installée et conforme aux spécifications / *Piping insulation installed as per specifications*	
	Épaisseur d'isolation / *Insulation thickness*	☐
	Type d'isolant utilisé / *Insulation type installed*	☐
	Type de recouvrement d'isolant utilisé / *Insulation jacketing type installed*	☐
	Validation de la compatibilité de l'isolant spécifié avec le procédé / *Validate insulation compatibility with process*	☐

DOCUMENTATION / *DOCUMENTATION*

5.01	Dessins certifiés reçus du fournisseur / *Vendor certified drawings received*	☐
5.02	Manuels d'instructions reçus du fournisseur / *Vendor instruction manuals received*	☐
5.03	Certificat de conformité obtenu des authorités locales / *Local authority certificate obtained*	☐

6.00 REMARQUES / *REMARKS*

No leak on modified line

Suite au verso / *Continuation on back* ☐ Suite feuille suivante / *Continuation on next sheet* ☐

SIGNATURES (TPO) / *SIGNATURES (POT)*

Exécutant Commissioning / Comm. performer Date:_____

Jesses Gauthier

Responsable AEM / *AEM Responsible* Date:_____

Jesses Gauthier

Étiquettes & cadenas changés / *Tags & padlocks changed* ☐

Initialer ce que vous avez fait / *Initial things you have done*

No	Par/*By*	Revision	Date
1			
2	M.G.	Information isolation et autres corrections	1/25/2019
3			

AEM **Rév.:02**

Mechanical Completion Certificat
6127 - Amaruq Project

AREA # :	Description:
648	Dewatering line (accelerated)

1. MECHANICAL COMPLETION DECLARATION

We confirm that the area listed above that we have jointly inspected has been tested and critical defects have been resolved. The remaining defects are recorded in the deficiency form (attached). This facility is mechanically completed and ready for commissioning in accordance with AEM Project rules.

Name	Position	Signature	Date
Pierre Gauthier	AEM Commissioning responsible	Pierre Gauthier Digitally signed by Pierre Gauthier DN: cn=Pierre Gauthier Date: 2020.09.03 09:38:35 -05'00'	
Marc-André Beaudet	AEM Construction responsible	Marc-Andre Beaudet Digitally signed by Marc-Andre Beaudet Date: 2020.09.09 17:11:54 -04'00'	
Jessy Gauthier	AEM Construction POV responsible	Jessy Gauthier Digitally signed by Jessy Gauthier Date: 2020.09.03 10:08:27 -05'00'	

2. ACCEPTANCE OF THE FINAL TEST COMPLETION

We acknowledge the completion of the Electro/Mechanical installation of the Area or sub-system and the commitment of the construction team to complete the deficiencies list within the respect of the scope of work. I agree that the Sub-Sysmem is safe to initiate the commissioning phase.

Name	AEM Project Position	Signature	Date
Marc-André Beaudet	AEM Construction responsible	Marc-Andre Beaudet Digitally signed by Marc-Andre Beaudet Date: 2020.09.09 14:15:01 -04'00'	
Pierre Gauthier	AEM Commissioning responsible	Pierre Gauthier Digitally signed by Pierre Gauthier DN: cn=Pierre Gauthier Date: 2020.09.03 09:40:37 -05'00'	
Guillaume Gemme	AEM Operation responsible	Guillaume Gemme Signature numérique de Guillaume Gemme DN : cn=Guillaume Gemme Date : 2020.09.13 18:42:26 -05'00'	

3. WALK-DOWN PARTICIPATION

See below the name of participant during the Walk-Down of the area, system or sub-system.

Name	AEM Project Position
Jessy Gauthier	Construction Engineer resident
Laurier Colette	Geotechnical Engineer
Guillaume Baril	Geotechnical Technicien
Michael Beaulieu	E&I Suppervisor

4. DEFECT SUMMARY LIST

Defect Discipline Codes		Defect Category Codes		Defect Priority Codes	
P	Piping	A	Safety or critical to operation	1	Complete before Pre-Commissioning starts
C	Civil/Structural	B	Included in the construction package, not completed	2	Complete before Cold Commissioning starts
M	Mechanical	C	Included in the construction package, need to be reviewed by engineering	3	Complete before Hot Commissioning starts
E	Electrical	D	Not included in the construction package	4	Complete before starts-up
I	Instrument & Control	M	Modification requested by the operation department	5	Complete before Hand Over
				6	Complete after Hand Over

No.	Discipline	Category	Priority	Description of Problem	Solution to be Used	Resp.	Target Date	Task Complete Accepted By	Date
1	P	B	3	Finish connexion line 214	Move freshet to dewatering	Const			
2	P	B	3	Line 0210 on a electrical cable near WTP	Lift the line 0210	Const			
3	P	B	3	Missing bolt on valve at Tee 0211 & 0210	Install missing bolt	Const			
4	P	B	3	Missing succion on A-50	Install when needed	Const			
5	P	B	3	Missing succion on A-51	Install when needed	Const			
6	P	B	3	Missing succion on AP-21	Inatall when needed	Const			
7	C	B	3	Jetty to short	Extend the jetty and piping	Const			
8	P	B	3	Connect piping 0222 to 0219	When pumping is needed	Const			
9	I	B	3	Missing paletteweel on discharge 0219	Install palett weel	Const			

3. WALK-DOWN PARTICIPATION

See below the name of participant during the Walk-Down of the area, system or sub-system.

Name	AEM Project Position
Jessy Gauthier	Construction Engineer resident
Laurier Colette	Geotechnical Engineer
Guillaume Baril	Geotechnical Technicien
Michael Beaulieu	E&I Suppervisor

4. DEFECT SUMMARY LIST

Defect Discipline Codes		Defect Category Codes		Defect Priority Codes	
P	Piping	A	Safety or critical to operation	1	Complete before Pre-Commissioning starts
C	Civil/Structural	B	Included in the construction package, not completed	2	Complete before Cold Commissioning starts
M	Mechanical	C	Included in the construction package, need to be reviewed by engineering	3	Complete before Hot Commissioning starts
E	Electrical	D	Not included in the construction package	4	Complete before starts-up
I	Instrument & Control	M	Modification requested by the operation department	5	Complete before Hand Over
				6	Complete after Hand Over

No.	Discipline	Category	Priority	Description of Problem	Solution to be Used	Resp.	Target Date	Task Complete Accepted By	Date
1	P	B	3	Finish connexion line 214	Move freshet to dewatering	Const			
2	P	B	3	Line 0210 on a electrical cable near WTP	Lift the line 0210	Const			
3	P	B	3	Missing bolt on valve at Tee 0211 & 0210	Install missing bolt	Const			
4	P	B	3	Missing succion on A-50	Install when needed	Const			
5	P	B	3	Missing succion on A-51	Install when needed	Const			
6	P	B	3	Missing succion on AP-21	Inatall when needed	Const			
7	C	B	3	Jetty to short	Extend the jetty and piping	Const			
8	P	B	3	Connect piping 0222 to 0219	When pumping is needed	Const			
9	I	B	3	Missing paletteweel on discharge 0219	Install palett weel	Const			

All item on this list were completed prior of the lake dewatering

Appendix E

QA reports

AGNICO EAGLE

QA INSPECTION REPORT
DEWATERING PHASE 2

Visit date	Time (Start/End)		Prepared by
11-07-2020	2:00 PM	4:00 PM	Claude Gagné, Guillaume Baril

Weather: ☒Sunny ☐Cloudy ☐Rain ☐Storm

Wind: ☐None ☒Light ☐Moderate ☐Strong Temperature: 20 °C

Comments:

Appendix: ☐Yes ☐No Pictures: ☒Yes ☐No

SAFETY REMARKS

ACTIVITIES PERFORMED BY AEM QA REPRESENTATIVE

Activities	Approximate location	Visual observation during field visit
Pipe installation	On NE Dike Line PC11-0214	Good installation of the pipe. Proper handling to avoid damaging the pipe.
Pipe inspection	Line 648-200-WFR-PC11-0214	• Connection between a Mineflex hose and an HDPE with incorrect bolt length. Extra washer to compensate to a lack of thread. (Photo 1) • The line is crossing two existing lines at AP-5 on an uneven ground. To prevent any damage to the existent pipe elevate the new pipe. (Photo 2) • Pipe insulation damaged with the culvert during installation. Hard to tell if there is any damage to the pipe inside the culvert. (Photo 3) • Half of the bolts was installed on the Mineflex connection. (Photo 4)

ADDITIONNAL COMMENTS:

- Ensure to install all MTO.

SPECIFIC ELEMENTS VERIFIED

Elements	Location	Scope and comments

QA DAILY NOTES

The line 648-200-WFR-PC11-0214 was installed on NE dikes and cross road 7 at Nemo road intersection instead of in front of A-49 (Photo 5). The crossing is an HDPE pipe buried under the road. Test will be made to determine if the pipe is in good shape.

Issued by AEM QA Representative : Claude Gagné (Signature) 11-07-2020 (Date)

PHOTOS/PICTURES

Photo 1. Mineflex hose connection with multiple washer, North of the culvert of AP-5

Photo 2. Pipe crossing two smaller pipes, AP-5

Photo 3. Pipe insulation damaged with the culvert, AP-5

Photo 4. Missing bolts at a Mineflex connection, beside the pit ramp culvert

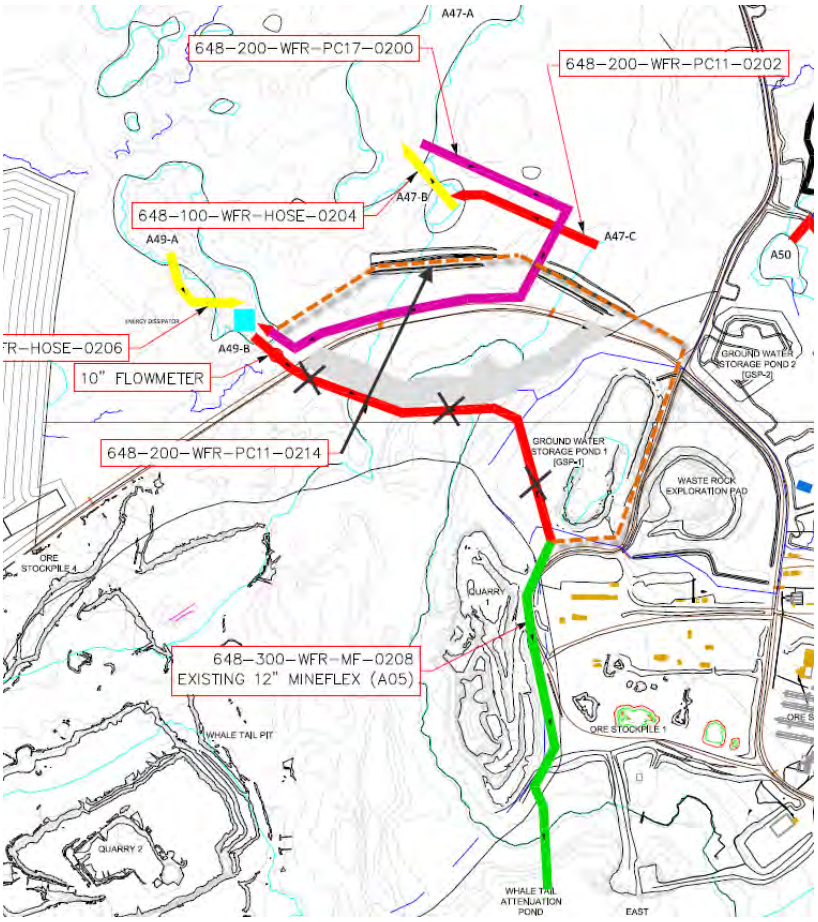

Photo 5. Actual route of the pipe 648-200-WFR-PC11-2014

AGNICO EAGLE

QA INSPECTION REPORT
DEWATERING PHASE 2

12-07-2020	2:00 PM	3:00 PM	Claude Gagné
Visit date	Time (Start/End)		Prepared by

Weather: ☒Sunny ☐Cloudy ☐Rain ☐Storm

Wind: ☐None ☐Light ☒Moderate ☐Strong Temperature: 20 °C

Comments:

Appendix: ☐Yes ☐No Pictures: ☒Yes ☐No

SAFETY REMARKS

ACTIVITIES PERFORMED BY AEM QA REPRESENTATIVE

Activities	Approximate location	Visual observation during field visit
Pipe inspection	Line 648-200-WFR-PC17-0200	• Utilization of 8” insulated instead of 8” non-insulated • Flange connection at every 6 section of 50’
Pipe inspection	648-200-WFR-PC11-0214 Middle of NE Dike	• Old instrument hole in the pipe (Photo 1)

ADDITIONNAL COMMENTS:

- Replace or repair the section with the hole.

SPECIFIC ELEMENTS VERIFIED

Elements	Location	Scope and comments

QA DAILY NOTES

Phase 1 pipes for A-49 and A-47 were reinstalled.

Issued by AEM QA Representative : Claude Gagné

Signature

12-07-2020

Date

PHOTOS/PICTURES

Photo 1. Instrument hole in the line 648-200-WFR-PC11-0214, NE Dike

Photo 2. Line PC17-0200 and PC11-0214 from left to right, NE Dike

AGNICO EAGLE

QA INSPECTION REPORT
DEWATERING PHASE 2

Visit date	Time (Start/End)		Prepared by
13-07-2020	10:30 PM	12:00 PM	Claude Gagné

Weather: ☒Sunny ☐Cloudy ☐Rain ☐Storm

Wind: ☐None ☐Light ☒Moderate ☐Strong Temperature: 14 °C

Comments:

Appendix: ☐Yes ☐No Pictures: ☒Yes ☐No

SAFETY REMARKS

ACTIVITIES PERFORMED BY AEM QA REPRESENTATIVE

Activities	Approximate location	Visual observation during field visit
Fusion	Fusion Pad	• Good alignment of the pipe before fusion • Proper cleaning inside and outside of the pipe • Proper double roll-back bead after fusion

ADDITIONNAL COMMENTS:

- Avoid any rough handling of the pipe for an additional 30 minutes after cooling (e.g. let the pipe fall from the pipe support)
- Workers use a smartphone app from the manufacturer of the fusion machine to know the fusion parameters to use depending on the pipe according to ASTM F2620

SPECIFIC ELEMENTS VERIFIED

Elements	Location	Scope and comments
Fusion	Fusion Pad	Absence of register of fusion parameters (heat temperature, soak time, cooling time)

QA DAILY NOTES

Issued by AEM QA Representative : Claude Gagné (Signature) 13-07-2020 (Date)

PHOTOS/PICTURES

Photo 1. Ongoing fusion on old 8" DR11 Pipe, Fusion Pad

AGNICO EAGLE

QA INSPECTION REPORT
DEWATERING PHASE 2

Period:	2020-07-14 to 2020-07-18	Laurier Collette Report Prepared by

Visit date:	time (Start/End)		QA Rep.	Weather	Wind conditions	Temperature
2020-07-17	2PM	5PM	LC, FB	Sunny	Strong	15
2020-07-18	1PM	3PM	LC	Sunny	Light	15

Comments: No QC activities/records for the period

Appendix: ☐Yes ☐No Pictures: ☒Yes ☐No

SAFETY REMARKS

Nothing to report

SUMMARY OF CONSTRUCTION ACTIVITIES

- Line installation A49 (Peanut lake) to Attenuation pond (MineFlex or 14'')
- Re-install 8'' A49 to A47
- Re-install line from A47 to tundra (Mineflex)
- Instal line A47A to A49
- Access road AP-21
- Piping A50-51-52
- Piping AP21
- Pipe fusion

ACTIVITIES PERFORMED BY AEM QA REPRESENTATIVE

Periodic QA inspections performed by the QA Representative to monitor the construction activities, progress and QC program.

Activities	Approximate location	Visual observation during field visit
Fusion spot check	South Ring Road Fusion Pad	• Good alignment of the pipe before fusion • Proper cleaning inside and outside of the pipe • Proper double roll-back bead after fusion • Fusion parameters are verified but are not recorded
Pipe visual inspection	A51-52-53, AP21	• Piping flanged every 300ft • No gasket on almost all flange assemblies
Culvert visual inspection	Road 7 by AP5	• About 1ft of unburried corrugated culvert at both end

ADDITIONNAL COMMENTS:

- No QC activities/ not documented, for this period
- Workers use a smartphone app from the manufacturer of the fusion machine to know the fusion parameters to use depending on the pipe according to ASTM F2620

SPECIFIC ELEMENTS VERIFIED

Elements	Location	Scope and comments
Fusion	Fusion Pad	Fusion parameters (heat temperature, soak time, cooling time) are not recorded
Piping	Line #0215, #0217, #0222,	No gasket on flanged connections
Piping	Line #0214	14” HDPE from A49 to NE dike east leg rather than Mine flex
Piping	Line #0200	Pipe section to be installed by Lake A47A (see photo #3)
Culvert	Road 7 by AP5	

QA NOTES

Some pipes have a lot of wear on them. This item is not covered in the Specifications

☒ **Discussed with AEM Construction Representative:** Jessy Gauthier (Cons. Rep.) | 2020-07-18 4:20 PM (Date & Time)

Issued by AEM QA Representative : _____ (Signature) 2020-07-19 (Date)

PHOTOS/PICTURES

Photo 1. Culvert crossing ring road by AP5

Photo 2. Fusion spot check

Photo 3. Line #0200 by A47-A lake

Photo 4. Flanged assembly without gasket

Photo 5. 12" MineFlex Line 0214 (NE Dike – East Leg)

Photo 6. 14" HDPE line 0214 (NE Dike – West Leg)

AGNICO EAGLE

QA INSPECTION REPORT
DEWATERING PHASE 2

Period:	2020-07-19 to 2020-07-25	Claude Gagné Report Prepared by

Visit date:	time (Start/End)		QA Rep.	Weather	Wind conditions	Temperature
2020-07-19	10AM	11AM	LC	Sunny	Light	15
2020-07-20			LC	Sunny	Light	15
2020-07-24			CG	Sunny	Light	20
2020-07-25			CG	Cloudy	Moderate	15

Comments: No QC activities/records for the period

Appendix: ☐Yes ☐No Pictures: ☒Yes ☐No

SAFETY REMARKS

Nothing to report

SUMMARY OF CONSTRUCTION ACTIVITIES

- Pipe Fusion
- Installation of 648-200-WFR-PC11-0210 (Line to Att. Pond from A53 tie-in)
- Finalization of piping A50-51-52

ACTIVITIES PERFORMED BY AEM QA REPRESENTATIVE

Periodic QA inspections performed by the QA Representative to monitor the construction activities, progress and QC program.

Activities	Approximate location	Visual observation during field visit
Fusion spot check	South Ring Road Fusion Pad	• Good alignment of the pipe before fusion • Proper cleaning inside and outside of the pipe • Proper double roll-back bead after fusion • Fusion parameters are verified but are not recorded
Pipe visual inspection	A47, A49	• No gasket on almost all flange assemblies
Pipe visual inspection	A50-51-52, A-P21	• During operation the pipe must be flanched and unflanched to change from pond to pond • No gasket on almost all flange assemblies

ADDITIONNAL COMMENTS:

- No QC activities/ not documented, for this period
- Workers use a smartphone app from the manufacturer of the fusion machine to know the fusion parameters to use depending on the pipe according to ASTM F2620

SPECIFIC ELEMENTS VERIFIED

Elements	Location	Scope and comments
Piping	Line #0211	Installation of a Y on the suction. Will be remove. (Photo 1)
Flange connection	Line #0217	No gasket on flange assemblie (Photo 3)

QA NOTES

Some pipes have a lot of wear on them. This item is not covered in the Specifications

After discussion with AEM Construction, there will be no hydrostatic leak test on any line for the dewatering.

Gasket on flange assemblie will be installed only if the pipe is permanent.

☒ **Discussed with AEM Construction Representative:** Alex Gelinas (Cons. Rep.) | 2020-07-27 2:00 PM (Date & Time)

Issued by AEM QA Representative : Claude Gagné (Signature) | 2020-07-30 (Date)

PHOTOS/PICTURES

Photo 1. Y on the suction of the Line #0211

Photo 2. Finalization of the discharge of the Line #0217

Photo 3. Flange connection Line #0217

AGNICO EAGLE

QA INSPECTION REPORT
DEWATERING PHASE 2

Period:	2020-08-01 to 2020-08-08	Laurier Collette Report Prepared by

Visit date:	time (Start/End)		QA Rep.	Weather	Wind conditions	Temperature
2020-08-01	10AM	11AM	CG	Sunny	Light	20
2020-08-06	11AM	12AM	LC	Overcast	None	15
2020-08-08	4PM	5PM	LC	Sunny	Light	20

Comments: No QC records for the period

Appendix: ☐Yes ☐No Pictures: ☒Yes ☐No

SAFETY REMARKS

Nothing to report

SUMMARY OF CONSTRUCTION ACTIVITIES

- Pipe Fusion
- Pipe installation

ACTIVITIES PERFORMED BY AEM QA REPRESENTATIVE

Periodic QA inspections performed by the QA Representative to monitor the construction activities, progress and QC program.

Activities	Approximate location	Visual observation during field visit
Fusion spot check	South Ring Road Fusion Pad	• Good alignment of the pipe before fusion • Proper cleaning inside and outside of the pipe • Proper double roll-back bead after fusion
Pipe visual inspection	A52-A53	• Mix of insulated and non-insulated pipe • Some flanged connections without gasket • 8” to 14” reducer at pipe line discharge
		•

ADDITIONNAL COMMENTS:

- QC not documented, for this period
-

SPECIFIC ELEMENTS VERIFIED

Elements	Location	Scope and comments
Line 0219	Between A52 & A53	Some flanged connections without gasket

QA NOTES

Missing gaskets previously discussed with construction (refer to 2020-07-25 QA report)

☐ **Discussed with AEM Construction Representative:**

Cons. Rep. | Date & Time

Issued by AEM QA Representative :

Signature | Date: 2020-08-09

PHOTOS/PICTURES

Photo 1. Pipe fusion on 14" DR17 (Blue line)

Photo 2. Pipe alignment for

Photo 3. Flange connection Line #0219

Photo 4. Discharge end Line #0219

Photo 4. Line #0219 towards A53 lake

AGNICO EAGLE

QA INSPECTION REPORT
DEWATERING PHASE 2

Period:	2020-08-09 to 2020-08-15	Laurier Collette Report Prepared by

Visit date:	time (Start/End)		QA Rep.	Weather	Wind conditions	Temperature
2020-08-12	10AM	12PM	LC/GB	Sunny	Light	20
2020-08-15	2PM	3PM	GB	Overcast	Light	15

Comments: No QC records for the period

Appendix: ☐Yes ☐No Pictures: ☒Yes ☐No

SAFETY REMARKS

Nothing to report

SUMMARY OF CONSTRUCTION ACTIVITIES

- Pipe walkdown with construction representative & E&I

ACTIVITIES PERFORMED BY AEM QA REPRESENTATIVE

Periodic QA inspections performed by the QA Representative to monitor the construction activities, progress and QC program.

Activities	Approximate location	Visual observation during field visit
Pipe walkdown	A47 to attenuation pond	• Hole in pipe from former paddlewheel flowmeter • No gasket on flanged connections • Loose bolt on flanged connexion – All other flanges properly bolted • Mineflex twist and bends • Missing mineflex length near Quarry 1 (about 200ft) – section have been installed afterwards • Line is 8” from A47 to NE Dike and then goes to 14” HDPE & 12” Mineflex • Mineflex squeezed between ground and HDPE 8” pipe • Presence of water in the 12” mineflex section
Pipe walkdown	A53 to attenuation pond	• Bad pipe alignment at fusion connection (line 210) • Pipe running on electrical cable (line 210) • Inproper/insufficient bolting at valve connections (line 210 & 211 tie-in)

Pipe walkdown	A50,A51 & AP21 to IVR att. pond	• Piping in bad condition (old pipe) • No gasket on flanged connections • 2 washers per bolt, all bolts are present and tight • A53 discharge is directly on the shore • Pump and suction at A50 still missing, to be installed shortly • New access road to att. Pond is being built. • A52 is already dewatered, the pipe hasn't been installed

ADDITIONNAL COMMENTS:

- QC not documented, for this period
- Fish-out is completed in A49 (Aug. 15 2020)

SPECIFIC ELEMENTS VERIFIED

Elements	Location	Scope and comments
Line 200/208	From A47 to attenuation pond	More work was required prior to starting pumping
Line 211/210	From A53 to attenuation pond	Corrective work to be done prior to using the line
Line 215	From A50 to attenuation pond	Pump and suction to be installed shortly
Line 217	From A51 to attenuation pond	Pump and suction from A50 to be transferred when A50 is dewatered
Line 222	From AP21 to A52	Pad to AP21 needs to be extended since the water dropped

QA NOTES

Line 200/208:

Critical corrections to be done prior to starting the line for the first time have been performed by E&I & construction on 2020-08-12/2020-08-13

Comissionning of the line occurred during the day of 2020-08-13. Leaks have been detected. Damaged pipe have been replaced. The line is now operational.

Line 215/217/219 :

Some pipes are in bad shape (item not covered in the specifications), and also without on flanged connections (item already discussed)

No VPO forms received from QC/Construction at the time of issuing this QA report

☒ **Discussed with AEM Construction Representative:** Jessy Gauthier (Cons. Rep.) | During walkdown inspections (Date & Time)

Issued by AEM QA Representative : _____ (Signature) 2020-08-17 (Date)

PHOTOS/PICTURES

	
1.1 Holes underneath saddle for former paddlewheel	1.2 Bend
	
1.3 Pipe complete twist	1.4 bend
	
1.5 Reducer 14”x12” at mineflex connection	1.6 Mineflex upstream of ring road crossing – squeezed by 8” HDPE pipe

Photo set #1. Line #200 & 208

	
2.1 bad pipe alignment at fusion joint	2.2 bad pipe alignment at fusion joint
	
2.3 Pipe laying over electrical cable	2.4 Insufficient bolting at valve connections
	
2.5 Tie-in line 210x211	

Photo set #2. Line 210 & 211

	
3.1 A50 pumping station, pump and suction to be installed	3.2 Flenge properly bolted, without gasket Pipe showing damage
	
3.3 A53 discharge point	3.4 Acces road to AP-21, pad to be extended
	
3.5 intersection line 200-214	

AGNICO EAGLE

QA INSPECTION REPORT
DEWATERING PHASE 2

Period:	2020-09-13 to 2020-09-19	Arnaud Poirier, Claude Gagné Report Prepared by

Visit date:	time (Start/End)		QA Rep.	Weather	Wind conditions	Temperature
2020-09-14	7:00	8:00	AP/LC	Overcast	Light	0
2020-09-15	10:00	11:30	AP	Sunny and cloudy	heavy	-3
2020-09-16	13:30	14:30	AP	Overcast	Light	-2
2020-09-18	12:30	13:30	CG	Sunny	Light	0

Comments:

Appendix: ☐Yes ☐No Pictures: ☒Yes ☐No

SAFETY REMARKS

Nothing to report

SUMMARY OF CONSTRUCTION ACTIVITIES

- Pipe inspection following the activation of the two pumps dewatering the lakes A-50 and A-51

ACTIVITIES PERFORMED BY AEM QA REPRESENTATIVE

Periodic QA inspections performed by the QA Representative to monitor the construction activities, progress and QC program.

Activities	Approximate location	Visual observation during field visit
Dewatering pipe inspection	Lake A-50 and A-51	• The dewatering of the lake A-50 and A-51 is ongoing. • Gaskets missing on multiple flanges. • The pipe used for the dewatering of lake A-50 is cracked and leaking. • The pipe used for the dewatering of lake A-51 is cracked and leaking. • Both pumps are activated and pumping the two lakes in lake A-53. • One flange is leaking on the pipe used for the dewatering of lake A-50

ADDITIONNAL COMMENTS:

- The bad pipe conditions was already reported in previous QA reports.
- The missing gaskets of the flanges were already reported in previous QA reports.

SPECIFIC ELEMENTS VERIFIED

Elements	Location	Scope and comments

QA NOTES

Lines pumping A-50 and A-51:

The cracked pipes were replaced and the pumping is now continuing free of leaks

The faulty flange problem was addressed and the flange is now functioning correctly

AP-21 line was used to pump A-50 and A-51 in parallel

Gaskets are still missing on the flanges

☒ **Discussed with AEM Construction Representative:** Alex Gelinas (Cons. Rep.) | 2020/09/20 9:00 (Date & Time)

Issued by AEM QA Representative : Claude Gagné (Signature) | 2020/09/20 (Date)

PHOTOS/PICTURES

	
1.1 *Pipe cracked between lake A-50 and lake A-53*	1.2 *Pipe cracked between lake A-51 and lake A-53*
	
1.3 *Lake A-51 discharging in lake A-53*	1.4 *Flange leaking near lake A-50*
	
1.3 *Lake A-50 being dewatered.*	

Photo set #1. Line used for the dewatering of the lakes A-50 and A-51